GR

Original Submission

000016.001

THE LAW OFFICES OF JOHN B. HALLAGAN

1620 I Street, N.W. • Suite 925
Washington, D.C. 20006

Tel: 202-293-5800 • Fax: 202-463-8998
Email: Hondobear@aol.com

DEC 17 2003

Dr. Robert Martin
Office of Food Additive Safety (HFS-255)
Center for Food Safety and Applied Nutrition
Food and Drug Administration
5100 Paint Branch Parkway
College Park, Maryland 20740-3835

11 December 2003

Dear Dr. Martin:

On behalf of my client, Colorcon, please accept the attached voluntary notification of the "generally recognized as safe" (GRAS) status of polyvinyl alcohol for use in foods. The attached documentation is submitted to comply with the agency's proposed rule, "Substances Generally Recognized as Safe." 62 Fed. Reg. 18938 (17 April 1997). Three copies of the voluntary GRAS notification are attached.

The voluntary GRAS notification is titled "Polyvinyl Alcohol Notification" and consists of the information requested by the agency in its 1997 proposed rule including a signed claim of exemption, information on the conditions of intended use in food, a full description of the basis for the GRAS determination and supporting documentation, information on the characteristics and manufacture of polyvinyl alcohol, and information related to the self-limiting level of use.

Several significant events have occurred since we first met with FDA staff on 30 January 2002 to discuss the submission of a voluntary GRAS notification for the use of polyvinyl alcohol in foods. These events support of the safety of polyvinyl alcohol under its conditions of intended use in foods, and include:

- The assignment of a permanent acceptable daily intake of 50 mg/kg body weight/day by the Joint FAO/WHO Expert Committee on Food Additives at its June 2003 meeting. A copy of the summary and conclusions from this meeting is attached to the voluntary GRAS notification document.

- The presentation of data supporting the safety of polyvinyl alcohol in poster presentations at the March 2002 meeting of the Society of Toxicology with abstracts published in the March 2002 issue of *The Toxicologist*. These poster presentations and abstracts are attached to the voluntary GRAS notification.

- The presentation of data supporting the safety of polyvinyl alcohol in poster presentations at the November 2002 meeting of the American College of Toxicology. These poster presentations are attached to the voluntary GRAS notification.

- The publication in the March and May 2003 issues of *Food and Chemical Toxicology* of three papers reviewing the safety of polyvinyl alcohol. These papers are attached to the voluntary GRAS notification.

We would appreciate it if you would please address future correspondence related to this voluntary GRAS notification to David Schoneker of Colorcon at 415 Moyer Boulevard, West Point, Pennsylvania 19486, with a copy to me. Thank you for your consideration of this matter.

Sincerely,

(b)(6)

John B. Hallagan

Attachments – 3 copies of voluntary GRAS notification

POLYVINYL ALCOHOL NOTIFICATION

I. GRAS Exemption Claim

A. Claim of Exemption From the Requirement for Premarket Approval Pursuant to Proposed 21 CFR § 170.36 (c)(1). 62Fed. Reg. 18938 (17 April 1997)

Polyvinyl alcohol (PVA), as defined in the attached specifications in Appendix A, has been determined to be generally recognized as safe (GRAS) consistent with Section 201(s) of the Federal Food, Drug, and Cosmetic Act. The specifications in Appendix A describe the partially hydrolyzed polyvinyl alcohol grade (PVA). This determination is based on scientific procedures as described in the following sections, under the conditions of its intended use in food, among experts qualified by scientific training and experience. Therefore, the use of PVA in food as described below is exempt from the requirement of premarket approval.

Signed,

(b)(#)

Date 11 December 2003

John B. Hallagan
The Law Offices of John B. Hallagan, P.C
1620 I St., N.W.
Suite 925
Washington, D.C. 20006

Agent for:

Colorcon
415 Moyer Boulevard
P.O. Box 24
West Point, PA
19486

B. Name and Address of Notifier

John B. Hallagan
The Law Offices of John B. Hallagan, P.C.
1620 I St., N.W.
Suite 925
Washington, D.C. 20006

000019

C. Common Name of the Notified Substance

Polyvinyl alcohol (PVA)

D. Conditions of Intended Use in Food

PVA is to be applied to dietary supplement products, regulated as foods, as part of aqueous film coating systems manufactured by Colorcon of West Point, PA. The amount used will not be in excess of that necessary to achieve its intended effect. A dietary supplement tablet/capsule would typically be coated such that the coating formulation would provide a 4.0% weight gain to the overall weight of the tablet/capsule. Since PVA is expected to comprise upwards of 45.0% of the weight of the formulation, PVA may constitute up to 1.8% of the weight of the tablet/capsule (*i.e.*, tablet capsule weight x 0.04 x 0.45). A "conservative maximum" human exposure of 3 mg PVA/kg body weight/day was calculated on the assumption that a user of dietary supplements could consume ten 1,000 mg tablets per day (*i.e.*, 10 x 1,000 mg x 4.0% x 45.0% = 180 mg) and assuming a human body weight of 60 kg (*i.e.*, 180 mg/60 kg body weight = 3 mg/kg body weight).

E. Basis for the GRAS Determination

Pursuant to 21 CFR § 170.30, PVA, as defined in Appendix A, the grade of PVA intended for use by Colorcon, has been determined to be GRAS based on scientific procedures. This determination is based on the views of experts who are qualified by scientific training and experience to evaluate the safety of PVA as a component of food (a summary of the Expert Panel's report is attached). The safety of PVA is supported by a number of published studies including metabolic studies, acute, and medium-term toxicity studies in experimental animals, mutagenicity studies, and a safe history of human exposure.

The following pivotal published documents supporting the safety of PVA are attached to this Notification letter:

1. 3 articles published in the Food and Chemical Toxicology:

   a. *Review of the Oral Toxicity of Polyvinyl Alcohol (PVA)*, C.C. DeMerlis, D.R. Schoneker, **41**, pp. 319-326. (March 2003)

   b. *Subchronic Toxicity Study in Rats and Genotoxicity Tests with Polyvinyl Alcohol, C.M. Kelly*, C.C. DeMerlis, D.R. Schoneker, J. F. Borzelleca, **41**, pp. 719-727. (May 2003)

   c. *Effects of Polyvinyl Alcohol Administered in the Diet to Rats on Fertility, Early Embryonic Development, Growth and Development*, D.E. Rodwell, C.M. Kelly, C.C. DeMerlis, D.R. Schoneker, J. F. Borzelleca, **41**, pp. 729-737. (May 2003)

2. 3 posters presented at the Society of Toxicology's annual meeting in March 2002

   a. *Evaluation of the Genotoxic Potential of Polyvinyl Alcohol in a Short-term Battery of Tests*, C.C. DeMerlis, K. Adams, C.M. Kelly

000020

b. *The Effects of Polyvinyl Alcohol Administered in the Diet to Rats on Fertility, Early Embryonic Development, Growth and Development*, C.C. DeMerlis, C.M. Kelly, D.E. Rodwell, D.R. Schoneker

c. *A 3-Month Dietary Toxicity Study in Rats with Polyvinyl Alcohol*, C.M. Kelly, C.C. DeMerlis

3 abstracts published in The Toxicologist March 2002 SOT annual meeting supplement:

d. *Evaluation of the Genotoxic Potential of Polyvinyl Alcohol in a Short-Term Battery of Tests,* C.M. Kelly, C.C. DeMerlis, 352 , p.72, Volume 66, Number 1-S

e. *A 3-Month Dietary Toxicity Study in Rats with Polyvinyl Alcohol*, C.M. Kelly, C.C. DeMerlis, 1301, p. 266, Volume 66, Number 1-S

f. *Effects of Polyvinyl Alcohol Administered in the Diet to Rats on Fertility, Early Embryonic Development, Growth and Development,* D.E. Rodwell, C.M. Kelly, C.C. DeMerlis, 1834, p. 375, Volume 66, Number 1-S

3. 2 posters presented at the American College of Toxicology's annual meeting in November 2002

a. *A Subchronic Toxicity Study in Rats and Genotoxicity Tests with Polyvinyl Alcohol*, C.M. Kelly, C.C. DeMerlis, C.E. Mason, J. Kitching, D.R. Schoneker

b. *The Effects of Polyvinyl Alcohol Administered in the Diet to Rats on Fertility, Early Embryonic Development, Growth and Development*, C.C. DeMerlis, C.M. Kelly, D.E. Rodwell, D.R. Schoneker

In further support of it's safety, PVA, meeting the specifications in Appendix A, has been evaluated by the Joint FAO/WHO Expert Committee on Food Additives Sixty-first Meeting June 2003 and an acceptable daily intake of 50 mg/kg/bw has been assigned. A copy of the summary and conclusions from the 61st JECFA is attached.

000021

F. Availability of Information

The data and information that serve as a basis for this GRAS determination are available for the Food and Drug Administration's review and copying at a reasonable time at the offices of:

John B. Hallagan
The Law Offices of John B. Hallagan, P.C.
1620 I St., N.W.
Suite 925
Washington, D.C. 20006

Alternatively, copies of data and information can be provided to FDA upon request, by contacting John Hallagan at 202-331-2333 (phone) or 202-463-8998 (fax).

II. Detailed Information About the Identity of the Substance

A. Identity

PVA is in the form of a white, odorless granular powder. It is soluble in water and insoluble in aliphatic and aromatic hydrocarbons, esters, ketones, and oils (Handbook of Pharmaceutical Excipients, 1994). The melting point for PVA of the type intended for use by Colorcon is in the range of 180°C-190°C. It has a specific gravity of 1.19 to 1.31 (Handbook of Pharmaceutical Excipients, 1994). The specifications in Appendix A describe the partially hydrolyzed polyvinyl alcohol grade (PVA).

Common or Usual Name:	Polyvinyl alcohol
Chemical Name:	Polyvinyl alcohol; ethenol homopolymer
Chemical Abstracts Service (CAS) Number:	9002-89-5
Empirical Formula and Formula Weight:	$(C_2H_4O)_n(C_4H_6O2)_m$
Molecular weight:	Listed in Appendix I

Structural Formula:

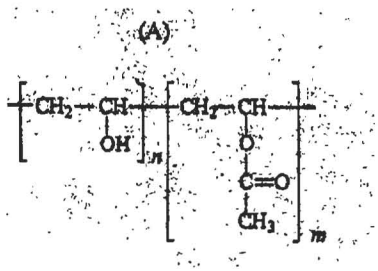

000022

B. Method of Manufacture

PVA is manufactured through the polymerization of vinyl acetate and the subsequent controlled hydrolysis (saponification) of polyvinyl acetate. Two proprietary catalytic agents are used to initiate the polymerization process. The process is based on the partial replacement of ester groups in the vinyl acetate with hydroxyl groups. A diagrammatic representation of the manufacturing process is presented in Figure 1.

The primary raw material for the manufacture of PVA is vinyl acetate monomer, with methanol as the solvent. Sodium acetate, methanol and methyl acetate are the primary impurities that result from the PVA manufacturing process. The sodium acetate is a reaction by-product which is monitored by the residue on ignition test. The residual methanol and methyl acetate are monitored by process controls, individual specifications, and analytical methods developed by the supplier.

III. Self-Limiting Levels of Use

PVA content is limited by the sprayability of the aqueous coating formulation. At solids content in excess of 30% w/w, aqueous solutions of PVA cannot be atomized. The amount of coating formulation applied to each tablet also is limited by the need to allow for release of the active ingredients and to retain the appearance, including logo and brand, of the product being coated.

IV. Basis for GRAS Determination

The determination that PVA, as defined in Appendix A, is GRAS is on the basis of scientific procedures.

000024

Figure 1 Method of Manufacture of Polyvinyl Alcohol

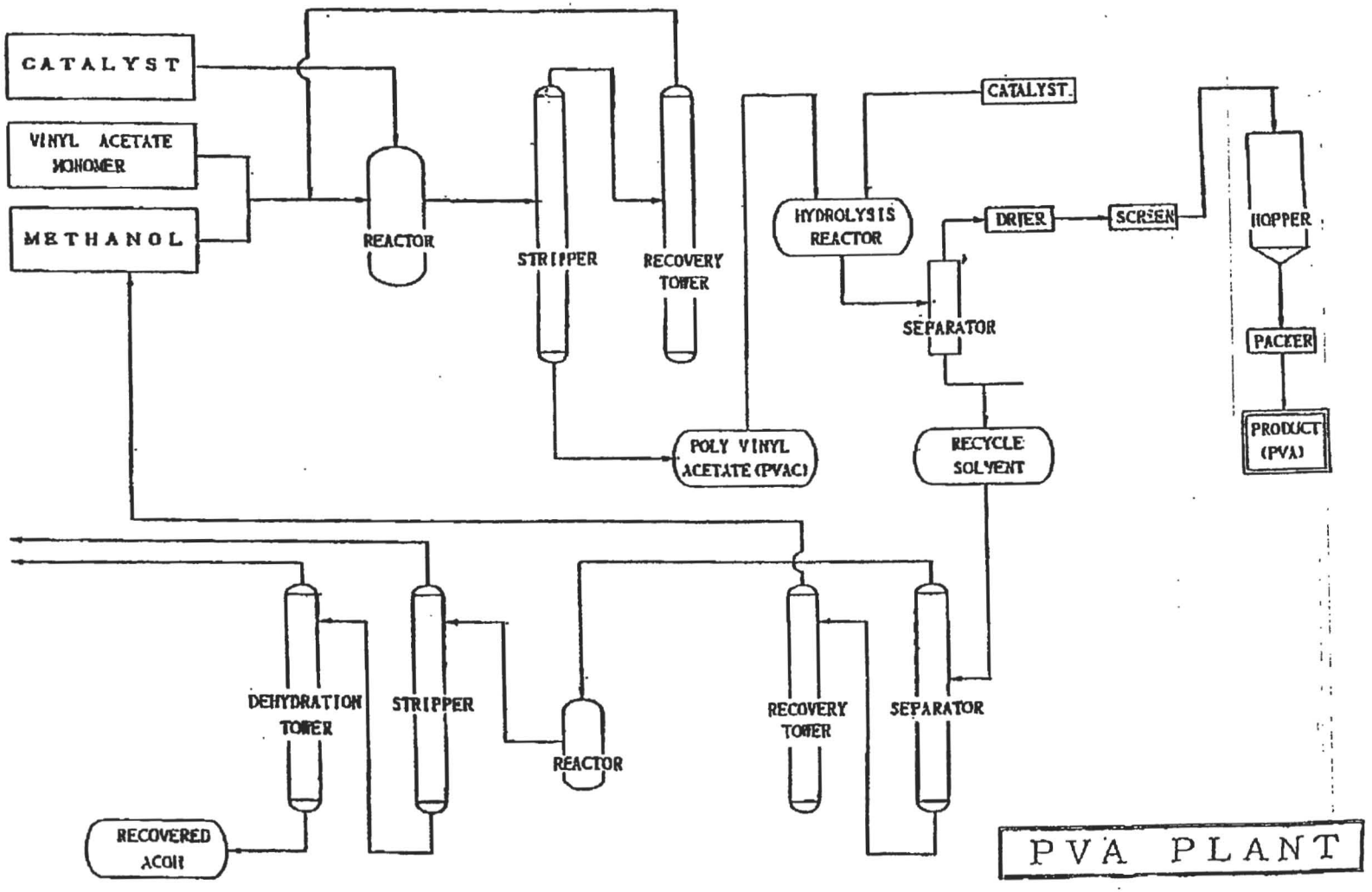

000025

Appendix A: Specifications for Food Grade Polyvinyl Alcohol (PVA)

Material must meet all USP, Ph.Eur. and JPE Requirements

Specifications for Polyvinyl Alcohol Used by Colorcon		
Specification Parameter	**Specification**	**Reference/Test Methodology**
Appearance	White to slightly yellow powder	visual inspection
Foreign Matter	free from visible contamination	Supplier method
Identification	tests 1-3 pass Tests A & B pass	JPE[1] Ph.Eur.[5]
Appearance of Solution (Sol. S ~3.85%)	Clear, less colored than Ref.Sol.Y7	Ph.Eur.
Viscosity (4%)	4.8 - 5.8 mPa.s.[2]	JPE/USP[3]
pH (4% in water)	5.0-6.5	JPE/USP
Loss on drying (105 °C)	not more than 5.0%	Ph.Eur./JPE
Residue on Ignition (450-550 °C)	not more than 1.0%	JPE
Water-insoluble substances	not more than 0.1%	USP
Degree of Hydrolysis	86.5-89.0%; partially hydrolyzed	JPE (JIS[4])/USP
Acid value	not more than 3.0	Ph. Eur.
Ester value	125 – 153 mg KOH/g	Ph. Eur.
Heavy metals[8] (as lead)	not more than 10 ppm (limit test)	JPE/Ph.Eur.
Lead[8]	not more than 2 ppm[7]	Atomic Absorption (FCC)
Arsenic[8]	not more than 2 ppm	JPE
Residual methanol	not more than 1.0%[6]	Supplier method
Residual methyl acetate	not more than 1.0%	Supplier method
Particle size	99.0% less than 150 microns	Supplier method

[1] The Japanese Pharmaceutical Excipients Book. 1993. Monograph on Polyvinyl Alcohol, p.260.
[2] Correlates with molecular weights in the approximate range of 26,000 to 30,000.
[3] United States Pharmacopeia (26) and National Formulary (21). 2003. U.S. Pharmacopeial Convention, Rockville, MD.
[4] Japanese Industrial Standards. Testing Methods for Polyvinyl Alcohol. JIS K 6726.
[5] European Pharmacopoeia. 2003.
[6] Level is lower than the JPE specification of 1.5%.
[7] Lead limit is currently not listed in existing compendia. However, FCC has stated that they will be lowering lead limits to 2 ppm on most food grade additives in the future. Therefore, this limit is needed so that a future FCC monograph can be obtained.
[8] The test is not run routinely but the PVA can be certified to meet these requirements through process controls, validation and periodic testing.

000026

SUMMARY OF THE EXPERT PANEL REPORT CONCERNING THE GENERALLY RECOGNIZED AS SAFE (GRAS) STATUS OF POLYVINYL ALCOHOL FOR USE IN TABLET/CAPSULE COATING FORMULATIONS

Introduction

As independent experts qualified by relevant national and international experience and scientific training to evaluate the safety of food ingredients, we, the undersigned, Joseph F. Borzelleca, Ph.D. (Medical College of Virginia), Walter H. Glinsmann, M.D (Glinsmann, Inc.), and Ian C. Munro, Ph.D., FRCPath (Cantox Health Sciences, Inc.) were requested by the manufacturer, Colorcon, as an Expert Panel (hereinafter referred to as the Panel) to evaluate the safety and to determine the Generally Recognized As Safe (GRAS) status of polyvinyl alcohol (PVA), for use in aqueous film coating systems to be applied to dietary supplement products regulated as foods. The expert panel report includes appropriate specifications.

The Panel, independently and collectively, critically examined a comprehensive package of publicly available scientific information and data compiled from the literature and other published sources. In addition, the Panel evaluated other information deemed appropriate or necessary, including data and information provided by Colorcon. The data evaluated by the Panel included information pertaining to the method of manufacture and product specifications, analytical data, the intended use of polyvinyl alcohol in tablet/capsule coating formulations, exposure data, and comprehensive literature on the safety of PVA in general, and of the PVA specifically intended for use by Colorcon.

Following independent and collective critical evaluation of available data and information summarized herein, the Panel was asked to render an opinion on whether PVA meeting appropriate food and pharmaceutical grade specifications, and manufactured in compliance with current Good Manufacturing Practices, is GRAS based on scientific procedures.

Composition, Manufacturing and Specifications

PVA is manufactured by the polymerization of vinyl acetate and the subsequent controlled hydrolysis (saponification) of polyvinyl acetate. Two proprietary catalytic agents are used to initiate the polymerization process. The process is based on the partial replacement of ester groups in the vinyl acetate with hydroxyl groups.

The primary raw material for the manufacture of PVA is vinyl acetate monomer, with methanol as the solvent. Sodium acetate, methanol and methyl acetate are the primary impurities that result from the PVA manufacturing process. The sodium acetate is a reaction by-product that is monitored by the residue on ignition test. The residual methanol and methyl acetate are monitored by process controls, individual specifications, and analytical methods developed by the supplier.

Specifications for polyvinyl alcohol meet all latest USP/NF and international specifications for pharmaceutical grade PVA.

Intended Use

PVA is intended for use in foods, including dietary supplement products, as part of aqueous film coating systems manufactured by Colorcon. PVA is intended for use in an amount not in excess of that necessary to achieve its effect as a film coating. The same grade of PVA is used in film coatings applied to pharmaceutical tablets/capsules. A dietary supplement tablet would typically be coated such that the coating formulation would provide a 4.0% weight gain to the overall weight of the tablet/capsule. Since PVA is expected to comprise on average 45.0% of the weight of the formulation, PVA may constitute up to 1.8% of the weight of the tablet/capsule (*i.e.*, tablet capsule weight x 0.04 x 0.45).

Exposure Estimates

Potential exposures to PVA from dietary supplements depend on tablet/capsule sizes, the number of doses of each product, and the number of different dietary supplement products consumed over the course of a day.

A conservative maximum exposure estimate was established based on the assumption that a user of dietary supplement products could consume upwards of ten 1,000 mg tablets coated with a formulation containing PVA. Based on this assumption, and given that the coating formulation composes approximately 4.0% of the weight of the tablet and that PVA comprises approximately 45.0% of the coating formulation, conservative maximum human exposures were estimated to be on the order of 180 mg (*i.e.*, 10 tablets @ 1,000 mg each x 0.04 x 0.45 = 180 mg). Assuming a human body weight of 60 kg, the maximum estimated daily exposure of 180 mg/day equates to 3 mg/kg body weight/day. It should be noted that the estimate assumes that all of the products consumed are indeed coated with PVA-containing film coating formulations. Clearly, this will not be the case in actual practice.

Total exposures to PVA from its intended use and from its current use in pharmaceutical products was estimated to be 6 mg/kg body weight/day. The estimated additional 3 mg/kg body weight/day from use in pharmaceuticals was derived using the same assumptions as used in the calculation of exposure associated with use in dietary supplement products.

Data Pertaining to the Safety Assessment of PVA

The safety of PVA is based on: (a) metabolic, mutagenicity, and toxicological data on PVA in general, and on PVA specifically intended for use by Colorcon and, b) the small quantities expected to be consumed from the intended use. It is also important to note that PVA has been approved for use in coatings applied to pharmaceutical products.

With respect to the toxicology and human studies, a considerable amount of data pertaining to the effects of intravenously injected or subcutaneously implanted PVA was reviewed. Since, under its intended conditions of use, human exposures would be through the oral route, these data were not considered to be critical to the safety evaluation.

Summary

The weight of the available scientific evidence for PVA supports the safe intake by humans. General toxicity, reproductive toxicity, and genetic toxicity studies conducted on PVA do not indicate potential for adverse health effects in humans from dietary exposure at the intended levels of use.

The acute oral toxicity of PVA, as expected, is very low. In a GLP-compliant 90-day oral toxicity study in rats, PVA intended for use by Colorcon was found to produce no evidence of systemic toxicity up to the highest tested dose of 5,000 mg/kg body weight/day. In this study, the only notable finding was of unformed stool. This effect was likely due to the high content of non-absorbed substance (PVA) in the dietary admixture. No effects of PVA in rats fed doses of up to 5,000 mg/kg body weight occurred in parental or first or second generation animals in a GLP-compliant 2-generation reproductive toxicity study. PVA is not mutagenic or genotoxic. There is no evidence to indicate that PVA is carcinogenic by the oral route. The animal toxicology data support a NOAEL for PVA of 5,000 mg/kg body weight/day and provide for a substantial safety factor over the conservative maximum estimated human intakes of 3 mg/kg body weight/day associated with its intended use in foods, specifically dietary supplements.

The signature page from the expert panel report is attached.

Conclusion

We, the Expert Panel, have independently and collectively critically evaluated the data and information summarized above and conclude that polyvinyl alcohol (PVA), as defined in Appendix I, meeting appropriate food/pharmaceutical grade specifications, and manufactured in compliance with current Good Manufacturing Practices, is Generally Recognized As Safe (GRAS) by scientific procedures for use in film coating formulations to be applied to dietary supplement products.

(b)(6)

Joseph Borzelleca, Ph.D.
Professor, Pharmacology and Toxicology
Medical College of Virginia
Virginia Commonwealth University
Richmond, VA

24 Dec 2001
Date

(b)(6)

Walter Glinsmann, M.D.
Glinsmann, Inc.
1321 - 4th St., S.W.,
Washington, DC

February 19, 2002
Date

(b)(6)

Ian C. Munro, Ph.D., FRCPath
President
Cantox Health Sciences, Inc.
Mississauga, Ontario
CANADA

Feb 25, 2002
Date

Pages 000031-000032 have been removed in accordance with copyright laws. Please see appended bibliography list of the references that have been removed from this request.

Pages 000033 - 000040 have been removed in accordance with copyright laws. Please see appended bibliography list of the references that have been removed from this request.

Pages 000041 - 000049 have been removed in accordance with copyright laws. Please see appended bibliography list of the references that have been removed from this request.

Pages 000050 - 000058 have been removed in accordance with copyright laws. Please see appended bibliography list of the references that have been removed from this request.

Pages 000059 - 000060 have been removed in accordance with copyright laws. Please see appended bibliography list of the references that have been removed from this request.

Pages 000061 - 000062 have been removed in accordance with copyright laws. Please see appended bibliography list of the references that have been removed from this request.

Pages 000063 - 000065 have been removed in accordance with copyright laws. Please see appended bibliography list of the references that have been removed from this request.

Pages 000066 - 000067 have been removed in accordance with copyright laws. Please see appended bibliography list of the references that have been removed from this request.

Pages 000068 - 000068 have been removed in accordance with copyright laws. Please see appended bibliography list of the references that have been removed from this request.

Pages 000069 - 000069 have been removed in accordance with copyright laws. Please see appended bibliography list of the references that have been removed from this request.

Pages 000070 - 000071 have been removed in accordance with copyright laws. Please see appended bibliography list of the references that have been removed from this request.

Pages 000072 - 000073 have been removed in accordance with copyright laws. Please see appended bibliography list of the references that have been removed from this request.

Submission End

AM

Lubin, Lisa

From: DSchoneker@colorcon.com
Sent: Wednesday, February 04, 2004 6:42 PM
To: Lubin, Lisa
Cc: CDeMerlis@colorcon.com
Subject: Polyvinyl Alcohol GRAS Notification

Dear Ms. Lubin,

Chris DeMerlis has informed me that you would like us to submit some general classification information regarding the proprietary catalyst which is used in the manufacturing process used to produce the Polyvinyl Alcohol refered to in our GRAS Notification. We do not currently have that information since our supplier of the Polyvinyl Alcohol considers the specific identity of the catalyst to be Confidential Information. However, I will contact our supplier and request that they provide us with some general classification information regarding the catalyst that I can send to you.

It may take a bit of time to get this information but I will send it to you as soon as possible. Hopefully, this will not hold up the review of our GRAS Notification since this is a minor point and doesn't relate to the safety of PVA for our intended uses. All the material used in our toxicology studies was made using this same process from the same supplier.

Once I contact our supplier and obtain this information, I will be back in touch with you.

Thank you for your quick consideration of our GRAS Notification document.

Sincerely,

David R. Schoneker
Director of Global Regulatory Affairs
Colorcon
415 Moyer Blvd.
West Point, PA 19486
Ph: 215-661-2513
Fx: 215-661-2113

Visit us at http://www.colorcon.com

NOTICE: This e-mail contains confidential and/or proprietary information, some or all of which may be legally privileged. It is intended only for the named recipient. If an addressing or transmission error has misdirected the e-mail, please notify the author by replying to this message. If you are not the named recipient you must not use, disclose, distribute, copy, print, or rely on this e-mail, and should immediately delete it from your computer system. Thank you.

000078

Pages 000079-000079 removed under the Privacy Act of 1974.

Reference List for Industry Submission, GRN 000141

Pages	*Author*	*Title*	*Publish Date*	*Source*	*BIB_Info*
000031-000032	Joint FAO/Who Expert Committee	Joint FAO/WHO Expert Committee On Food Additives Sixty-first meeting Summary And Conclusions	June 2003	FAO/WHO	Sixty-First
000033 - 000040	DeMerlis, C.C.; Schoneker, D.R.	Review of the oral toxicity of polyvinyl alcohol PVA	2003	Food and Chemical Toxicology	Volume 41, pgs 319-326
000041 - 000049	Kelly, C.M.; DeMerlis, C.C.; Schoneker, D.R.; Borzelleca, J.F.	Subchronic toxicity study in rats and genotoxicity tests with polyvinyl alcohol	2003	Food and Chemical Toxicology	Volume 41, pgs 729-737
000050 - 000058	Rodwell, D.E.; Kelly, C.M.; DeMerlis, C.C.; Shoneker, D.R.; Borzelleca, J.F.	Effects of polyvinyl alcohol administered in the diet to rats on fertility, early embryonic development, growth and development	2003	Food and Chemical Toxicology	Volume 41, pgs 729 - 737
000059 - 000060	DeMerlis, C.C.; Adams, K.; Kelly, C.M.	Evaluation of the Genotoxic Potential of Polyvinyl Alcohol In a Short Teerm Battery of Tests	March 2002	Journal of the Society of Toxicology	NA
000061 - 000062	Demerlis, C.C.; Kelly, C.M.; Rodwell D.E.; Schoneker, D.R.	The Effects of Polyvinyl Alcohol Administered in The Diet to Rats On Fertility Early Embryonic Development Growth And Developement	March 2002	Journal of the Society of Toxicology	NA
000063 - 000065	Kelly, C. M.; DeMerlis, C. C.	A 3- Month Dietary Toxicity Study In Rats With Polyvinyl Alcohol	March 2002	Journal of the Society of Toxicology	Volume 66
000066 - 000067	DeMerlis, C.C.; Adams, K.; Kelly, C.M.	Evaluation of the Genotoxic Potential of Polyvinyl Alcohol In a Short-Term Battery of Tests	March 2002	Journal of the Society of Toxicology	Volume 66, Number 1-S, pg 72
000068 - 000068	Kelly, C.M.; DeMerlis, C.C.	A 3-Month Dietary Toxicity Study In Rats With Polyvinyl Alchohol	March 2002	The Toxicologist	Volume 66, Number 1-S, pg.266

NA- Not applicable

Pages	Author	Title	Publish Date	Source	BIB_Info
000069 - 000069	Rodwell, D.E.; Kelly, C.M.; DeMerlis, C.C.	Effects of Polyvinyl Achohol Administered In The Diet To Rats On Fertility, Early Embryonic Development, Growth And Development	November 2002	NA	NA
000070 - 000071	Kelly, C.M.; DeMerlis, C.C.; Mason, C.E.; Kitching, J.; Shoneker, D.R.	A Subchronic Toxicity Study in Rats And Genotoxicity Tests With Polyvinyl Alcohol	November 2002	NA	NA
000072 - 000073	Rodwell, D.E.; Kelly, C.M.; DeMerlis, C.C.;	The Effects of Polyvinyl Alcohol Administered in The Diet to Rats On Fertility Early Embryonic Development Growth And Developement	November 2002	NA	NA

NA- Not applicable