GR

ORIGINAL SUBMISSION

Mead Johnson Nutritionals

2400 West Lloyd Expressway Evansville IN 47721 0001 812 429-5000

August 1, 2007

Paulette Gaynor, Ph.D. (HFS-255)
Consumer Safety Officer
Office of Additive Safety
Center for Food Safety and Applied Nutrition
Food and Drug Administration
5100 Paint Branch Parkway
College Park, MD 20740-3835

RE: GRAS Exemption Claim and Exemption Notification for the addition of Lactobacillus Casei, Subspecies Rhamnosus GG, (LGG) to the exempt infant formula, Nutramigen LIPIL.

Dear Dr. Gaynor,

Pursuant to criteria provided in proposed 21 CFR 170.36, Mead Johnson & Company (MJ) submits the attached GRAS Exemption Claim and Exemption Notification for the addition of Lactobacillus Casei, Subspecies Rhamnosus GG, (LGG) to the exempt infant formula, Nutramigen LIPIL

A panel of experts convened by MJ determined that LGG and the source of LGG is GRAS for use in exempt infant formula.

Pre-notification meetings were held with representatives of the Office of Food Additive Safety and the Office of Nutritional Products, Labeling and Dietary Supplements

Sincerely,

Matias Diez, PhD
Associate Director, Regulatory Science North America

A Bristol-Myers Squibb Company

Table of Contents

Table of Contents 2

I. GRAS Exemption Claim 3

A Name and address of notifier 3

B Name and identification of GRAS substance 4

C Intended conditions of use and consumer exposure 4

D Basis for GRAS determination 5

E Availability of information 6

II. General Introduction to the Class of Ingredients 7

A Benefits of adding lactic acid bacteria to infant formula 7

B Scientific rationale for the use of LGG 8

C Mead Johnson's European experience 9

D Safety of LGG 10

III. Conclusion 12

IV. References 13

List of Appendices

Appendix A. GRAS Determination for the Addition of *Lactobacillus casei*, subspecies *rhamnosus* GG, (LGG)

Appendix B. European Experience

Appendix C. Conclusion of the Expert Panel

I. GRAS Exemption Claim

Pursuant to the criteria provided in proposed 21 CFR 170.36 (62 FR 18938; April 17, 1997; *Substances Generally Recognized as Safe (GRAS)*; the GRAS proposal), Mead Johnson & Company (MJ) hereby notifies the Food and Drug Administration that the use of *Lactobacillus* GG (LGG) in Exempt Hypoallergenic Infant Formula powder with Extensively Hydrolyzed Casein and without added MCT oil with DHA & ARA at levels not exceeding 10^8 colony forming units of LGG per gram (cfu/g), intended for the feeding of term infants from the time of birth under the supervision of a physician, is exempt from the pre-market approval requirements of the Federal Food, Drug, and Cosmetic Act, because MJ has determined that such use is generally recognized as safe (GRAS) through scientific procedures.

August 1, 2007
Date

Matias R Diez
Associate Director, Regulatory Science North America
Mead Johnson & Company

A. Name and address of notifier

Mead Johnson & Company
2400 W. Lloyd Expressway
Evansville, Indiana 47721-0001.

Contact: Matias R Diez, Associate Director, Regulatory Science North America
Telephone: (812) 429-5714
Mobile:: (812) 499-9515
Facsimile: (812) 429-5054
E-mail: matias.diez@bms.com

B. Name and identification of GRAS substance

The name of the substance that is subject of this GRAS determination is *Lactobacillus casei*, subspecies *rhamnosus* GG, (LGG). This specific LGG product is manufactured by Valio by accepted fermentation techniques in facilities and under conditions that are suitable for human food use. Food grade hydrolyzed whey permeates and hydrolyzed whey/casein proteins are used as growth media ingredients in the fermentation process. After fermentation, LGG is concentrated by ultra filtration and thoroughly washed with sterile water to remove impurities (*e.g.*, fermented media components are removed in order to increase cell concentration), and saccharose is added as a cryoprotectant.

C. Intended conditions of use and consumer exposure

MJ has developed this dossier consisting of data and information establishing that the LGG powder containing *Lactobacillus casei*, subspecies *rhamnosus* GG, (LGG) is generally recognized as safe (GRAS) for use under the supervision of a physician in an exempt hypoallergenic infant formula powder with extensively hydrolyzed casein and without added MCT oil with DHA & ARA intended for term infants from the time of birth.

MJ proposes to add LGG powder at levels of 10^8 colony forming units of LGG per gram (cfu/g) of powdered formula. This level of LGG is intended to ensure a minimum concentration of 10^6 cfu/g throughout the 12-18 month shelf life of the formula. Based on this range of LGG concentrations, with normal dilution of the powder formula in water according to label directions (*i.e.*, 13.5 g/100 mL), and assuming an average daily formula intake of 800 mL, the estimated daily intake of LGG is approximately 10^8-10^{10} cfu per day over the shelf-life of the product.

MJ proposes to add LGG powder to an exempt hypoallergenic infant formula powder with extensively hydrolyzed casein and without added MCT oil with DHA & ARA used under the supervision of a physician and intended for term infants from the time of birth.

MJ proposes to add LGG powder to an exempt hypoallergenic infant formula powder with extensively hydrolyzed casein and without added MCT oil as a line extension with DHA & ARA in the United States. The product name has not been determined. This will be a powdered exempt infant formula for use under the

supervision of a physician in allergy management. This exempt hypoallergenic infant formula powder with extensively hydrolyzed casein and without added MCT oil with DHA & ARA is considered by the U.S. Food and Drug Administration (FDA) to be a food for special dietary use for infants. This formula containing LGG would also be marketed for the dietary management of food allergies and would not be intended to be fed to premature infants or infants who might have immune problems unless directed and supervised by the infant's physician.

MJ has added LGG to its Nutramigen (hypoallergenic infant formula powder with extensively hydrolyzed casein and without added MCT oil) line of infant formulas in the EU since 2003 at a level of 10^8 cfu/g powder. This level of LGG has been demonstrated to ensure a minimum concentration of 10^6 cfu/g throughout the 12-18 month shelf life of the formula. Through 2005, an estimated 51,900 infants have been fed Nutramigen LGG, representing over eight million days of consumption (based on annual production and/or sales of marketed formulas).

D. Basis for GRAS determination

MJN's GRAS determination for the proposed use of LGG is based on scientific procedures as described under 21 CFR 170.30(b).

To demonstrate that LGG is GRAS under its intended conditions of use, the safety of the intake of both LGG itself and the whole product is established under its intended conditions of use. This intake of the whole product and of LGG is determined to be GRAS by showing that the safety of these levels of intake is generally recognized by experts qualified by scientific training and experience to evaluate the safety of substances directly or indirectly added to food, and is based on generally available and accepted information.

The publicly available data demonstrating the safety of the proposed use of LGG was reviewed by a GRAS panel consisting of:

Dennis M. Bier, M.D.
Baylor College of Medicine
Houston Texas, USA

Joseph F. Borzelleca, Ph.D.
Virginia Commonwealth University
Richmond Virginia, USA

Roger A. Clemens, Dr.P.H.
University of Southern California
Los Angeles California, USA

Michael P. Doyle, Ph.D.
University of Georgia
Griffin Georgia, USA

Berthold Koletzko, M.D.
University of Munich
Munich, Germany

Daniel J. O'Sullivan, Ph.D.
University of Minnesota
St. Paul Minnesota, USA

This panel reviewed a monograph prepared by JHeimbach LLC and Hogan & Hartson LLP as well as any other information available to them which they deemed pertinent. The panel evaluated the dietary exposure, source of the substance, method of manufacture, specifications, and contaminant levels, as well as information from published *in vitro*, animal, and human studies. The panel also reviewed unpublished genomic information regarding LGG which corroborated the safety established through the published information. The GRAS panel, which MJ regards as qualified by scientific training and experience to evaluate the safety of substances added to food, concluded that LGG meeting food grade specifications is GRAS under its intended conditions of use.

Therefore, it is concluded, based on scientific procedures, that the intended use of LGG is safe and is also GRAS. A signed conclusion statement by the expert panel is attached in appendix C.

E. Availability of information

The data and information that serve as the basis for this GRAS notification will be sent to the FDA upon request, or are available for the FDA's review and copying at reasonable times at the office of Mead Johnson & Company, 2400 West Lloyd Expressway, Evansville, IN 476721, telephone: (812) 429-5000, e-mail matias.diez@bms.com

II. General Introduction to the Class of Ingredients

A. Benefits of adding lactic acid bacteria to infant formula

The infant intestinal tract is essentially sterile at birth and experiences a period of steady colonization over the following weeks and months as it is exposed to microorganisms from the environment. It is generally accepted that these microorganisms have a major impact on the overall development and function of the gastrointestinal mucosa and immune system. The most important early sources of bacteria include the birth canal, maternal fecal flora and the hospital or birthing environment (Conway, 1996; Heavey and Rowland, 1999), and during the first year of life diet plays a role in shaping the microflora composition as the infant transitions from breast-feeding to iron-containing infant formulas and then to the introduction of solid foods (Edwards and Parrett, 2002). Over time the intestinal microflora evolves into a complex ecosystem, ultimately reaching as high as 10^{14} organisms representing over 400 species (Zetterstrom, et al. 1994, Edwards and Parrett, 2002). These organisms are important in the breakdown of some food components (Edwards and Parrett, 2002), development of the immune system (Zetterstrom et al., 1994), contributing to an environment that resists colonization by potential pathogens (Heavey and Rowland, 1999) and maintaining gut-barrier function (Majamaa and Isolauri, 1997). In some instances, it may be desirable to influence the composition of the microflora to enhance these beneficial activities or make up for known insufficiencies. For example, infants with cow's milk allergy (CMA) have been shown to have impaired mucosal barrier function (Isolauri, 1995) and therefore may benefit from microbiota that strengthen endogenous barrier mechanisms.

While permanent changes to the indigenous microflora are extremely difficult to effect by modification of the diet, certain types of beneficial bacteria, particularly strains of lactic acid bacteria (LAB) have been shown in both adults and infants to temporarily colonize the intestinal tract during regular oral consumption. These bacteria have long been consumed for their ability to impart beneficial effects on the host. The daily level of

beneficial bacteria consumed by both infants and adults through consumption of yogurts, fermented products and dietary supplements is typically about 10^8-10^{10} colony forming units (cfu), a level that is more than 1000-fold lower than the number of bacteria resident in the entire intestinal tract (Zetterstrom et al., 1994). This suggests that, despite being present in sufficient quantities during the consumption period to impart beneficial activities in the gastrointestinal tract, these ingested bacteria are greatly outnumbered by indigenous strains in both infants and adults and would therefore not result in significant alterations (i.e., substantial or permanent changes) in the established intestinal biota.

B. Scientific rationale for the use of LGG

In addition to its primary role of digestion and absorption of nutrients, the gastrointestinal tract also functions to protect the host from potentially harmful agents such as intestinal microorganisms and food antigens. As previously mentioned, infants with CMA have been shown to have impaired gut barrier function, potentially leading to aberrant antigen transfer and immune responses and the breakdown of oral tolerance in infancy (Isolauri, 1995). Based on these observations, there is a strong scientific rationale for the use of infant formula containing beneficial bacteria that positively influence gut barrier function and immune responses by infants suffering from CMA. MJ has selected LGG to be used in such an exempt infant formula because it is among the most extensively studied and best documented bacterial strain available for commercial application. There is an abundance of scientific information pointing to both its safety and its usefulness in the dietary management of infants with atopic dermatitis and CMA. A number of clinical studies have evaluated the effects of LGG when fed with extensively hydrolyzed casein-protein formulas to infants with a history of CMA. In these studies, most infants and toddlers that were fed LGG for up to six months showed symptomatic improvement of cow milk protein allergy (atopic dermatitis) with no evidence of adverse effects on growth or on plasma and clinical markers.

C. Mead Johnson's European experience

Based on the strong safety and scientific profile of LGG, MJ has been marketing hypoallergenic Stage 1 and Stage 2 infant formulas containing LGG in Europe since 2003. Through the end of 2005, this represented an estimated 8.5 million days of feeding with no adverse events being reported that could reasonably be attributed to the presence of LGG. Research was done in the form of a survey by an independent contractor to obtain information from health care providers in Sweden, Netherlands, and Belgium to determine their recommendation of, clinical experience with and use of the marketed formula with LGG.

Among the respondents, most (85%) reported that they currently recommend Nutramigen LGG, either Nutramigen LGG Stage 1 (for infants less than 4 months of age) or Nutramigen LGG Stage 2 (for infants older than 4 months of age). The majority of respondents (72%) reported recommending both Nutramigen LGG products. Only 3% indicated they are no longer recommending Nutramigen LGG although they did recommend the product in the past. There is little difference in the recommendation behaviors of European physicians of Nutramigen LGG Stage 1 and Stage 2. Both products are widely recommended for the dietary management of symptoms of cow milk protein allergy, GI manifestations, and atopic dermatitis. Additionally, Stage 1 formula with LGG is also used for infantile colic and urticaria.

Over half of those recommending Nutramigen LGG reported symptom improvement beyond that offered by Nutramigen without LGG. In addition, a majority of respondents see benefits of Nutramigen LGG beyond that of cow milk protein allergy symptom management. These physicians indicated recommending Nutramigen with LGG for: *the positive effect of LGG on gut flora, earlier resolution of symptoms, improved efficacy (compared to Nutramigen without LGG), published clinical data, stimulation of the immune system*, and *improved gut health.*

Nearly all physicians (97%) indicated that they see no difference in the incidence of adverse events related to the use of Nutramigen LGG compared to Nutramigen that

does not contain LGG. Physicians defined adverse events as: *diarrhea, loose stools, vomiting, refusal to drink, colic*, and *no improvement in symptoms*. Physicians reported that only 2% of patients had experienced adverse events while using Nutramigen LGG, and the adverse events reported by the physicians are similar to the symptoms of the underlying condition for which Nutramigen LGG was being recommended.

D. Safety of LGG

For the past twenty years, LGG has been commercialized and consumed in a wide variety of food products and dietary supplements throughout the world including the U.S. Recently, the Dannon Company began marketing its Danimals drinkable yogurts with LGG for children in the U.S. LGG is nonpathogenic and nontoxigenic, and is known not to produce exotoxins. It has no plasmids; therefore, its risk for disseminating antibiotic resistance is lower than plasmid-containing bacteria. The safety of LGG has been verified using *in vitro* methods, genetic sequencing, animal models, and controlled trials of human subjects consuming extremely large doses. In addition, MJ has had the complete genome of LGG sequenced and analyzed for potential safety risks. The conclusion of the expert panel is that no evidence exists in the genome data that demonstrates or suggests a hazard from the intended use of LGG. The effects of LGG consumption on both short- and long-term microbiota colonization have been studied, as have the effects of metabolic products produced by LGG. Furthermore, LGG's capacity for invasiveness, infectivity, and degradation of the human intestinal mucus has been evaluated and found to present no safety hazard.

Historically, both *Lactobacillus* and *Bifidobacterium* strains associated with food products have been considered to be generally safe and documented cases of systemic infections that may be associated with consumption of lactic acid bacteria are extremely rare. Over the past 30 years there have been about 180 published cases of bacteremia and 69 cases of endocarditis putatively caused by lactobacilli (Aguirre and Collins, 1993; Gasser, 1994; Salminen and Donohue, 1996). These cases have occurred with various

lactobacilli and the vast majority have occurred in patients with compromised immune status and/or mucosal barrier function due to underlying conditions such as heart disease and diabetes or therapeutic treatment (*e.g.*, dental surgery). In order to evaluate the impact of increased consumption of LGG on systemic infections, surveillance studies have evaluated potential increases in clinical infections with increased LGG consumption. These studies showed that during a nine-year period, despite a notable increase in LGG consumption (~10-fold) in Finland, the number of infections involving *Lactobacillus* species reported to Helsinki health authorities remained at a constant background level of 10-20 cases per year (Salminen et al., 2002, Saxelin et al., 1996a). Saxelin et al.(1996a) found that over the 1989 – 1992 period, "the results did not provide evidence that any particular species or subspecies of Lactobacillus was the cause of the infections; no infections caused by isolates similar to LGG were observed." Salminen et al. (2002) identified 11 out of a total of 48 isolates to be identical to LGG over the 1994-2000 period but concluded that "[t]he results indicate that increased probiotic use of LGG has not led to an increase in *Lactobacillus* bacteremia."

Eight case reports have been published on clinical infections involving lactobacilli where the use of LGG is implicated as the potential source for the infection. All the cases occurred in subjects with some type of underlying disease or health condition (e.g., liver abscess, diabetes, heart damage, short gut syndrome). Of these eight, four infections were in infants who received LGG supplementation in an attempt to manage complications resulting from severe underlying illnesses (Kunz, et al.,2004, De Groote et al., 2005, Land et al., 2005). In the two cases reported by Kunz et al., both patients had ultra-short guts which were chronically inflamed and had experienced cholestasis prior to LGG consumption. In a case reported by De Groote et al., the patient had experienced necrotizing enterocolitis and had a history of short bowel syndrome secondary to resection of approximately 80% of the small intestine. The patient's history included other complicating medical factors including multiple surgeries, cholestasis, cirrhosis, secondary hyperslenism, hypothyroidism and chronic lung disease. In the fourth case, reported by Land et al., the patient had undergone heart repair surgery,

pacemaker placement and pulmonary artery banding. Complications prior to LGG supplementation included seizures, acute renal insufficiency, prolonged respiratory support and suspected sepsis for which the patient received several 7-10 day courses of broad-spectrum antibiotics.

These four cases demonstrate that LGG, like other lactobacilli, has the potential in rare instances to be an opportunistic pathogen in severely compromised subjects. In all four cases, the patients' gut integrity was severely impaired, either due to short-gut syndrome or gut ischemia due to poor cardiac function. In addition, all four patients had central venous catheters and were fed LGG from opened capsules through their gastrostomy tubes, leading all of the authors to conclude that contamination of the central line was a possible point of possible point of entry of the bacteria. These cases describe special situations with complicating factors that are widely divergent from what is seen in infants with food allergies and therefore do not indicate a safety risk for the intended conditions of use which includes the dietary management of food allergies and does not include premature infants or infants who might have immune problems unless directed and supervised by the baby's doctor. The in vitro and animal evidence, the absence of adverse effects of LGG in extensive clinical studies involving healthy subjects and those with less severe medical conditions, the lack of increased infections despite a ~10-fold increase in LGG consumption over a nine year period and the experience with Nutramigen LGG in Europe all provide overwhelming evidence that LGG is generally recognized as safe for the intended conditions of use.

III. Conclusion

In summary, MJ and a qualified expert panel have determined that the use of LGG in an exempt hypoallergenic infant formula powder with extensively hydrolyzed casein and without added MCT with DHA & ARA intended for the feeding of term infants from the time of birth under the supervision of a physician is generally recognized as safe (GRAS) based on the published scientific literature and that this safety is confirmed by the genomic sequence of LGG and MJ's experience using LGG in Europe for the past four years.

IV. References

Aguirre, M. and M.D. Collins. 1993. Lactic acid bacteria and human clinical infection. *J Appl Bacteriol.* 75: 95-107.

Conway, P.L. Development of Intestinal Microbiota. 1996. In: Mackie, R.I., White, B.A., and Isaacson, R.E., eds. *Gastrointestinal Microbes and Host Interactions*, 2: 3-38.

De Groote, M.A., Daniel, N.F., Dowell, E., Glode, M.P., Pace, N.R. 2005. *Lactobacillus Rhamnosus* GG bacterimia associated with probiotic use in a child with short gut syndrome. *The Pediatric Infectious Disease Journal.* 24(3): 278-280.

Edwards, C.A. and A.M. Parrett. 2002. Intestinal flora during the first months of life: new perspectives *Brit J Nutr.* 88 (suppl 1): S11-18.

Heavey, P.M., and I. R. Rowland. 1999. The gut microflora of the developing infant: Microbiology and metabolism. *Microbial Ecol. Health Dis* 11: 75-83.

Isolauri, E., T. Arvola, E. Moilanen, and S. Salminen. 2000. Probiotics in the management of atopic eczema. *Clin. Experiment. Allergy* 30 (11): 1604-1610.

Kunz, A.N., J.M. Noel, and M.P. Fairchok. 2004. Two cases of *Lactobacillus* bacteria during probiotic treatment of short gut syndrome. *J. Ped. Gastroenterol Nutr* 38: 457-458.

Land, M.H., K. Rouster-Stevens, C.R. Woods, M.L. Cannon, J.Cnota, and A.K. Shetty. 2005. *Lactobacillus* sepsis associated with probiotic therapy. *Pediatrics* 115: 178-181.

Majamaa, H. and E. Isolauri. 1997. Probiotics: A novel approach in the management of food allergy. *J. Allergy Clin. Immunol.* 99: 179-185.

Majamaa, H., E. Isolauri, M. Saxelin, and T. Vesikari. 1995. Lactic acid bacteria in the treatment of acute rotavirus gastroenteritis. *J Pediatr. Gastroent Nutr.* 20: 333-338.

Salminen, S.J. and D.C. Donohue. 1996. Safety assessment of *Lactobacillus* strain GG (ATCC 53103). *Nutrition Today* 31(6), Supplement 1: 12S-15S.

Salminen, M.K., S. Tynkkynen, H. Rautelin, M. Saxelin, M. Vaara, P. Ruutu, S. Sarna, V. Valtonen, and A. Järvinen. 2002. *Lactobacillus* bacteremia during a rapid increase in probiotic use of *Lactobacillus rhamnosus* GG in Finland. *Clin Infect Dis* 35: 1155-1160.

Saxelin, M., H. Rautelin, S. Salminen, and P. Mäkelä. 1996b. Safety of commercial products with viable *Lactobacillus* strains. *Infectious Diseases in Clinical Practice* 5: 331-335.

Zetterström, R., R. Bennet, and K.-E. Nord. 1994. Early infant feeding and micro-ecology of the gut. *Acta Paediatrica Japonica* 36: 562-571.

A

GENERALLY RECOGNIZED AS SAFE (GRAS) EVALUATION OF *LACTOBACILLUS CASEI*, SUBSPECIES *RHAMNOSUS* GG, (LGG)

Prepared for

Mead Johnson Nutritionals
Evansville, Indiana

TABLE OF CONTENTS

I. PROPOSED USE 1

A. Summary 1
B. Overview of Intestinal Biota 1
C. Selection of LGG as a Probiotic for Infant Formula 3
D. Proposed Use 5

II. IDENTITY AND DESCRIPTION OF LGG 6

A. Identity 6
B. Genetic Sequence and Profile 8
C. Antibiotic Resistance Profile 9

III. MANUFACTURING PROCESSES 12

A. LGG Powder Manufacturing Process 12
B. LGG Powder Specifications 14
C. Manufacturing Processes for Exempt Hypoallergenic Infant Formula powder with extensively hydrolyzed casein and without added MCT oil & DHA & ARA 15
D. Specifications for Exempt Hypoallergenic Infant Formula powder with extensively hydrolyzed casein and without added MCT oil & DHA & ARA 17

IV. ANALYTICAL METHODOLOGY FOR LGG 18

V. STABILITY OF LGG 19

VI. HISTORY OF LGG USE IN FOOD 20

VII. SAFETY OF LGG 22

A. *In Vitro* Studies 22
1. Ability to Adhere to Intestinal Cells 23
2. Ability to Degrade Mucin 27
3. Other Virulence Factors 28
4. Transfer of Antibiotic Resistance Genes 30
5. Impact on Intestinal Bacteria 31
B. Toxicity Studies 33
1. Acute Toxicity 33
2. Repeated Dosing Studies 34
C. Human Studies 41
1. Studies in Healthy Subjects 42

a) Colonization of the Intestinal Tract 42
(1) Colonization in Adults 42
(2) Colonization in Term and Preterm Infants 46
b) Impact on Intestinal Bacteria 57
c) Effects on Common Pediatric Infections 58
d) Effects on Antibiotic-Associated Diarrhea 63
e) Impact on Host Nutrition 66
2. Studies in Compromised Subjects 70
a) Studies in Neonates 71
b) Studies in Term Infants and Children 71
(1) Effects on Recovery from Acute Diarrhea 71
(2) Ability to Prevent Diarrhea 84
(3) Effects on Allergy Management 87

VIII. SPECIFIC SAFETY CONSIDERATIONS 98

A. Systemic Infections 99
1. Clinical Infections Involving Lactobacilli 99
2. Surveillance Studies 100
3. Infections Associated With Lactobacilli 101
B. Adverse Impact on Host Nutrition and Growth 106
C. Unfavorable Immune Stimulation 109
D. Gene Transfer Capability 110

IX. CONCLUSION 111

X. REFERENCES 113

XI. TABLES 122

XII. APPENDICES

A. Cell Banking System for LGG
B. Manufacturing Process for LGG
C. Certificates of Analysis for LGG
D. Analytical Method for LGG
E. Genetic Stability Testing of LGG by PFGE
F. Partial List of Products Containing LGG Sold Worldwide

I. PROPOSED USE

A. Summary

Mead Johnson Nutritionals (Mead Johnson) has developed this dossier consisting of data and information establishing that the LGG powder1/ containing *Lactobacillus casei*, subspecies *rhamnosus* GG, (LGG) is generally recognized as safe (GRAS) for use under the supervision of a physician in infant formula intended for term infants from the time of birth.

B. Overview of Intestinal Biota

At birth, the intestinal tract of the human infant is essentially devoid of microbial inhabitants. (Conway, 1996; Heavey and Rowland, 1999). As the infant is exposed to bacteria from its environment, including the birth canal, maternal fecal bacteria, and other sources (Zetterstrom, *et al.*, 1994), the colonization process begins and follows a characteristic pattern during the ensuing weeks. (Conway, 1996; Heavey and Rowland, 1999). These early colonization events lead to the development of the indigenous intestinal biota, which undergoes changes during the first year of life as the infant transitions from breast-feeding to iron-containing infant formulas and the introduction of solid foods. (Edwards and Parrett, 2002).

1/ The term "LGG powder" is used throughout this document to indicate the powder formulation supplied by Valio, Inc. and added to the infant formula manufactured by Mead Johnson. This terminology is used to distinguish between the LGG powder and the LGG bacteria contained in the powder.

Once established, the bacterial biota along the entire intestinal tract is extremely complex and includes an estimated 10^{13} or more bacteria representing over 400 different species. (Zetterstrom, *et al.*, 1994; Edwards and Parrett, 2002) These indigenous bacteria break down some food components into more easily assimilable forms (Edwards and Parrett, 2002), support local immune responses (Zetterstrom, *et al.* 1994), and contribute to an environment that resists colonization by potential pathogens (Heavey and Rowland, 1999). Probiotic strains are selected to impart beneficial effects on the composition and/or metabolism of the intestinal biota without causing adverse changes (*e.g.*, invasion of the epithelial cells, degradation of the intestinal mucin layer, production of toxins, transference of antibiotic resistance) that would imperil the health or nutritional status of the host.

While the complex microbiota of the adult is difficult to change on a long term basis, the infant microbiota is more amenable to change from diet, at least on a temporary basis. (Edwards and Parrett, 2002). Lactic acid bacteria (LAB), which include members of the genera *Lactobacillus*, are among the early inhabitants of the intestinal tract and mucus membranes. (Axelsson, 1998). Because of their ability to survive gastric transit, adhere to intestinal epithelial surfaces, and release potentially beneficial substances, lactobacilli are among the most commonly used probiotic bacteria. (Goldin *et al.*, 1992). The daily dose of probiotic strains in both infants and adults is typically about 10^8-10^{10} colony forming units (cfu), a level that is more than 1000-fold lower than the number of bacteria resident in the entire intestinal tract. (Zetterstrom *et al.*, 1994). This

suggests that any probiotic strains would be greatly outnumbered by indigenous strains in both infants and adults and would not result in significant alterations (*i.e.*, drastic or permanent changes) in the established intestinal biota.

C. Selection of LGG as a Probiotic for Infant Formula

Mead Johnson selected LGG to be used in infant formulas because it is among the most extensively studied and best documented probiotic available for commercial application. (Salminen and Donohue, 1996). LGG is nonpathogenic and nontoxigenic, and is known not to produce exotoxins. It has no plasmids; therefore, its risk for disseminating antibiotic resistance likely is lower than plasmid-containing bacteria. The safety of LGG has been verified using *in vitro* methods, genetic sequencing, animal models, and human subjects consuming extremely large doses. The effects of LGG consumption on both short- and long-term microbiota colonization have been studied, as have the effects of metabolic products produced by LGG. Furthermore, LGG's capacity for invasiveness, infectivity, and degradation of the human intestinal mucus has been evaluated.

As described in Section VIII.D., studies in neonates, infants, and children who are either healthy or compromised due to premature birth, acute diarrhea, or allergies, have shown that the ingestion of LGG at 10^8-10^{10} colony forming units per day (cfu/day) for two days to 15 months (most common treatments periods were 5 days to one month) reduces the risk and severity of rotavirus diarrhea, enhances recovery from antibiotic-associated diarrhea, and may have a role in preventing the development of allergies or alleviating the symptoms of

inflammatory bowel disorders. Collective assessment of these studies demonstrates that consumption of LGG is safe for use in infant formula and confers beneficial health effects for both healthy and compromised term infants from the time of birth.

In addition, during several years of consumption by infants of Mead Johnson's Nutramigen® LGG (hypoallergenic infant formula powder with extensively hydrolyzed casein and without added MCT oil) in the European Union (EU), no adverse effects have been reported to the manufacturer that could be ascribed to LGG. 1/ Mead Johnson began marketing a casein hydrolysate formula with LGG (*i.e.*, Nutramigen LGG) in the EU in 2003. As displayed in the following table, through 2005, an estimated 51,915 infants appeared to have been fed Nutramigen LGG, representing over eight million days of product consumption.

ESTIMATED CONSUMPTION OF NUTRAMIGEN LGG IN EUROPE

PRODUCT	Number of Infants [a]			
	2003	2004	2005	Total [b]
Nutramigen LGG (Stage 1)	–	4,657	5,463	10,120
Nutramigen LGG (Stage 2)	7,691	15,272	18,832	41,795

NOTES:

[a] Based on the total amount of product manufactured and shipped and assuming formula consumption as follows – Stage 1: 10 cans/month x 4 months; Stage 2: 6 cans/month x 6 months.

[b] Represents a total of more than 8.5 million days of feeding formula to infants.

1/ See additional explanation in section VI and accompanying footnote 3.

No adverse events have been confirmed in relation to Nutramigen LGG consumption. Relative to Nutramigen LGG sold in the EU, the extensively hydrolyzed casein and without added MCT oil with DHA & ARA formula that will be marketed in the U.S. differs only in that it will contain long-chain polyunsaturated fatty acids (LCPUFA). There is no evidence to indicate that LCPUFA affects either the solubility of the product or the viability of LGG in the product.

A. Proposed Use

Mead Johnson proposes to add LGG powder at levels of 10^8 colony forming units of LGG per gram (cfu/g) of powdered formula. This level of LGG is intended to ensure a minimum concentration if 10^6 cfu/g throughout the 12-18 month shelf life of the formula. Based on this range of LGG concentrations, with normal dilution of the powder formula in water according to label directions (*i.e.*, 13.5 g/100 mL), and assuming an average daily formula intake of 800 mL, the daily intake of LGG would be approximately 10^8-10^{10} cfu per day.

Mead Johnson proposes to add LGG powder to our extensively hydrolyzed casein and without added MCT oil with DHA & ARA as a line extension of this product in the United States. The product name has not been determined. This will be an extensively hypoallergenic Infant Formula powder with extensively hydrolyzed casein and without added MCT oil with DHA & ARA powdered, exempt infant formula for use in allergy management under the supervision of a physician. This extensively hypoallergenic infant formula powder with extensively hydrolyzed casein and without added MCT oil with DHA & ARA is considered by the U.S. Food and Drug Administration (FDA) to be a food for special dietary use for infants. The formula would be marketed for the dietary management of food allergies.

II. IDENTITY AND DESCRIPTION OF LGG

A. Identity

Lactobacillus casei, subspecies *rhamnosus* GG, (LGG) is a gram-positive bacterium that is a member of the broad classification of lactic acid bacteria (LAB). Although they are not a strictly defined taxonomic grouping, LAB generally are considered to include the following phylogenetically related genera, which have several biochemical and ecological features in common: *Aerococcus*, *Alloicoccus*, *Carnobacterium*, *Dolosigranulum*, *Enterococcus*, *Globicatella*, *Lactobacillus*, *Lactococcus*, *Lactosphaera*, *Leuconostoc*, *Oenococcus*, *Pediococcus*, *Streptococcus*, *Tetragenoccus*, *Vagococcus*, and *Weissella*. Due to similarities in its biochemistry, physiology, and ecology, the genus *Bifidobacterium* is often considered to be a LAB, as well, even though it is phylogenetically unrelated. (Axelsson, 1998). With the possible exception of some *Enterococcus* strains, most LAB strains are considered commensal microorganisms with no pathogenic potential. (Donohue and Salminen, 1996; Adams, 1999). LAB have a long history of use in fermented and non-fermented foods and have been noted for their ability to inhibit other microorganisms capable of causing foodborne illness or food spoilage. (Adams, 1999; Donohue and Salminen, 1996). Furthermore, LAB are ubiquitous in the intestinal epithelium and the gastrointestinal tract of humans of all ages. All of these factors lead to the reasonable conclusion that most LAB strains are safe for use in food, including infant formula.

Lactobacillus is a non-pathogenic genus of bacteria that consists of over 50 species. (Axelsson, 1998). Lactobacilli grow under reduced oxygen conditions in habitats where ample nutrients exist and are used in commercial applications for the fermentation of dairy products, fruits, vegetables, and meats. (Aguirre and Collins, 1993; Gasser, 1994). Some *Lactobacillus* strains are found in the gastrointestinal tract of healthy humans of all ages where they are among the "normal" bacteria. (Saxelin *et al.*, 1996b; Goldin *et al.*, 1992). Some studies suggest that LAB, particularly bifidobacteria and to a lesser extent lactobacilli, dominate the biota of the breast-fed infant, while the formula-fed infant has a more diverse biota that more frequently resembles that of adults. (Edwards and Parrett, 2002). While the greater prevalence of lactobacilli in breast-fed infants relative to formula-fed infants is not observed in all studies, it has been detected in the feces of approximately half of all infants up to 19 weeks of age. (Conway, 1996).

LGG was isolated in 1985 by Drs. Gorbach and Goldin of Tufts University from the intestinal biota of a healthy human, and the GG designation refers to its discoverers. Drs. Gorbach and Goldin selected LGG for its research and commercial potential due to its: (1) stability in acid and bile, a property that is necessary for survival through the upper gastrointestinal tract; (2) demonstrated adherence to human intestinal epithelial cells, a property that is necessary for potential gut colonization; (3) strong antimicrobial activity to pathogenic bacterial strains such as *E. coli*, *Streptococcus*, *Clostridium*, and *Salmonella*; and (4) strong growth rate. (Gorbach, 1996). LGG is a patented strain and is given the American

Type Culture Collection (ATCC) number 53103. Valio, Ltd. (Valio) of Helsinki, Finland was granted an exclusive license to manufacture, market, and distribute LGG in 1987.

B. Genetic Sequence and Profile

In an unpublished analysis, the complete genome of *Lactobacillus rhamnosus* strain GG was sequenced to 8X coverage revealing a genome of predicted size 2.84 mb in 532 contigs. All contigs, which are expected to contain at least 98% of the genes present, were annotated in each of their six possible open reading frames (ORFs) using standard computerized annotation programs. The annotations were manually checked, predicting a total of 2,405 potential genes in 464 contigs. All genes were compared to known GenBank sequences using the BLAST program at the National Center for Biotechnology Information (NCBI).

The Clusters of Orthologous Groups of proteins (COG) database at the NCBI found motifs for 1,761 of the potential genes, meaning that some information on possible function was available for 73% of the genes identified. Computerized and manual reviews of all matches did not find notable genes that would suggest significant virulence elements other than two putative hemolysin genes. It was also found that another sequenced *lactobacillus* species, *L. johnsonii,* also contains two of these genes. While LGG is resistant to vancomycin, no analogue to any characterized vancomycin gene was found, (*see also,* Tynkkynen *et al.,* 1998) suggesting it may be an inherent property of its cell wall and thus not transferable. While there were several proteins with motifs that may be present on antibiotic

resistance proteins, a more in-depth analysis suggested only two of them might be involved.

The conclusion of this analysis, based solely on the 8X sequence coverage, is that there is nothing unusual from a safety perspective about the LGG genome when compared to other *lactobacillus* genomes. No evidence exists in the genomic data that demonstrates, or suggests reasonable grounds to suspect, a hazard from the intended use of LGG. This unpublished analysis corroborates the available published information, which establishes the safety of LGG.

The genetic profile of LGG is maintained by a well-controlled cell banking system (see Appendix A) and evaluated periodically by various testing procedures performed by Valio (see Appendix B). Aliquots of the mother cultures are maintained in a freeze-dried state and periodically used to generate frozen cultures, which are then used to generate short-term subcultures that are individually thawed and used for production purposes. Production cultures are checked for microbiological purity by colony morphology assessment and carbohydrate fermentation profile, and genetic patterns are assessed by pulse field gel electrophoresis (PFGE) pattern. Additional information on the genetic stability of LGG is provided in Section V.

C. Antibiotic Resistance Profile

The potential for a probiotic to be resistant to the major antibiotics used to treat clinical infections is an important consideration in the overall safety of

the microorganism. The antibiotic susceptibility profile of LGG was most recently evaluated by Charteris *et al.* (2001). Minimum inhibitory concentrations (MICs) of a variety of antibiotics were determined by three protocols (*i.e.*, swab method without antibiotic prediffusion, swab method with prediffusion, and sloppy agar overlay method without prediffusion) of gradient diffusion (*i.e.*, E test) for LGG and 11 closely related *Lactobacillus rhamnosus* strains, as well as for two positive control strains of *Lactobacillus*. The antibiotics tested included selected inhibitors of cell wall synthesis (*i.e.*, benzylpenicillin, ampicillin, and vancomycin), protein synthesis (*i.e.*, gentamicin, streptomycin, tetracycline, chloramphenicol, and erythromycin), and nucleic acid synthesis (*i.e.*, co-trimoxazole, rifampicin, and metrodazole).

The antibiotic susceptibility of the 12 *Lactobacillus rhamnosus* strains, as provided collectively by Charteris *et al.* (2001), is presented in the following table.

ANTIBIOTIC SUSCEPTIBILITY OF CERTAIN *LACTOBACILLUS RHAMNOSUS* STRAINS [a]				
Antibiotic	**Susceptibility (μg/mL)**			**Susceptibility Assessment**
	Range	**MIC_{50} [b]**	**MIC_{90} [c]**	
Penicillin G (Benzylpenicillin)	0.034-0.50	0.25	0.375	Sensitive
Ampicillin	0.068-1.0	0.75	0.75	Sensitive
Vancomycin	≥256	≥256	≥256	Resistant
Gentamicin	24-256	64	128	Resistant
Streptomycin	8-256	128	≥256	Resistant

ANTIBIOTIC SUSCEPTIBILITY OF CERTAIN *LACTOBACILLUS RHAMNOSUS* STRAINS [a]				
Antibiotic	**Susceptibility (μg/mL)**			**Susceptibility Assessment**
	Range	**MIC_{50} [b]**	**MIC_{90} [c]**	
Tetracycline	0.375-8	1	1.5	Sensitive
Chloramphenicol	2-8	6	8	Sensitive
Erythromycin	0.375-8	1	2	Sensitive
Trimethoprim-sulfamethoxazole (Co-trimoxazole)	≥32	≥32	≥32	Resistant
Rifampicin	0.068-0.50	0.188	0.375	Sensitive
Metronidazole	≥32	≥32	≥32	Resistant

NOTES:

[a] Charteris *et al.* (2001).

[b] Minimum susceptibility concentration of 50% (*i.e.*, 6 of 12) of strains tested.

[c] Minimum susceptibility concentration of 90% (*i.e.*, 11 of 12) of strains tested.

All *Lactobacillus* strains tested were deemed to be resistant to vancomycin, co-trimoxazole, gentamicin, and metronidazole. According to the investigators:

> Intrinsic vancomycin resistance in lactobacilli has been attributed to the synthesis of modified cell wall peptidoglycan precursors that terminate in lactate. ... [The mechanism] which confers intrinsic co-trimoxazole resistance in lactobacilli is unknown. ... Aminoglycoside [*i.e.*, gentamicin] resistance is attributed to the absence of cytochrome-mediated electron transport in lactobacilli, which mediates drug uptake.

(Charteris *et al.*, 2001). No explanation was provided for the resistance to metronidazole, but it was noted that these results correspond to previous observations by these and other investigators. Genetic sequencing information for LGG indicates that no analog to any known vancomycin gene was found, (Tynkkynen *et al.*, 1998) suggesting that resistance is a property of the cell wall structure.

Among the antibiotics tested by Charteris *et al.* (2001), those that are frequently used in pediatric patients with appropriate indications include penicillin G, ampicillin, vancomycin, gentamicin, erythromycin, trimethoprim-sulfamethoxazole, and metronidazole.

III. MANUFACTURING PROCESSES

A. LGG Powder Manufacturing Process

LGG powder is manufactured for Mead Johnson by Valio. A schematic and further description of the manufacturing process is attached as Appendix B. LGG is produced by standard fermentation techniques in facilities and under conditions that are suitable for human food use. Food grade hydrolyzed whey permeates and hydrolyzed whey/casein proteins are used as growth media ingredients in the fermentation process. The method of hydrolysis for whey protein substrates used to grow LGG is not known. However, the enzyme used in hydrolysis of whey proteins as well as the end products is unlikely to cause allergic reactions in infants. No reactions were observed among 29 confirmed milk-allergic study participants who were challenged with LGG in a double-blind, placebo-

controlled, food challenge trial (unpublished, data on file at Mead Johnson). After fermentation, LGG is concentrated by ultra filtration and thoroughly washed with sterile water to remove impurities (*e.g.*, fermented media components are removed in order to increase cell concentration), and saccharose is added as a cryoprotectant. The raw materials and the regulatory status of these materials used in the manufacturing process are provided in the following table.

RAW MATERIALS USED IN THE PRODUCTION OF LGG POWDER	
Raw Material	**FDA Regulatory Status**
Hydrolyzed Whey	Meets FCC criteria for partially hydrolyzed proteins
Hydrolyzed Casein	Meets FCC criteria for partially hydrolyzed proteins
Manganese Sulfate	Used in accordance with 21 C.F.R. § 184.1461
Alcalase 0.6L	Meets JECFA and FCC criteria for food grade enzymes
Lactase	Meets FCC criteria for food grade enzymes
Structol J 673/A	Used in accordance with 21 C.F.R. § 173.340 (Defoaming agents)
Saccharose (Sucrose)	Used in accordance with 21 C.F.R. § 184.1854
NOTES: JECFA = Joint FAO/WHO Expert Committee on Food Additives FCC = Food Chemicals Codex	

The concentrated bacterial culture is freeze dried into a powder and shipped to Mead Johnson in powder form. As described below, Mead Johnson will incorporate the LGG powder during the dry blending process for manufacturing powdered formula. As described previously, Valio maintains a Cell Bank System to guarantee the origin and purity of LGG.

B. LGG Powder Specifications

Valio's specifications for LGG powder are provided in the table below. Certificates of analysis for six batches of LGG "Grade P" powder are provided in Appendix C.

VALIO SPECIFICATIONS FOR LGG POWDER (GRADE P)	
Parameter	**Specification**
LGG concentration	$\geq 3 \times 10^{11}$ cfu/g powder
Total viable aerobic count (non lactic bacteria)	< 1000 cfu/g
Yeasts	< 100 cfu/g
Molds	< 100 cfu/g
Enterobacteriaceae (and other gram-negative bacteria)	0/g
Clostridial spores	< 3 cfu/g*
Staphylococcus aureus	< 10 cfu/g**
E. coli.	0/g
Salmonella	0/25 g
Pseudomonas aeruginosa	< 10 cfu/g**

VALIO SPECIFICATIONS FOR LGG POWDER (GRADE P)	
Parameter	**Specification**
Aerobic bacterial spores (30°)	< 100 cfu/g
Bacillus cereus	< 100 cfu/g***
Saccharose	25-55% (40% typical)
Lactose	< 1%
ß-lactoglobulin	< 0.1 µg/g
Water activity	< 0.1
NOTES: *Absent within detection limit of < 3 Most Probable Number (MPN). **Absent within detection limit of < 10 cfu/g. ***Not tested separately if aerobic bacterial spores absent (*i.e.*, < 10 cfu/g).	

The only allergen that is tested for during the manufacturing process is ß-lactoglobulin. While no information is available on other relevant food allergens, none are expected given the nature of the materials used to manufacture LGG powder and normal practices in place to ensure product quality.

C. Manufacturing Processes for an extensively hypoallergenic Infant Formula powder with extensively hydrolyzed casein and without added MCT oil with DHA & ARA

For manufacturing an extensively hypoallergenic Infant Formula powder with extensively hydrolyzed casein and without added MCT oil with DHA & ARA and LGG powder, base powder production, dry blending, and packaging are the same as used at Mead Johnson facilities to produce Infant formula powder with the current extensively hydrolyzed casein and without added MCT oil with DHA & ARA except for the use of LGG powder in base powder blending. This process is outlined below and involves a dry-blending operation, which consists of adding powdered infant formula base, dry LGG powder, and various vitamin and

mineral premixes to a ribbon blender for mixing, and which is followed by canning in composite cans with reduced oxygen (nitrogen flushed).

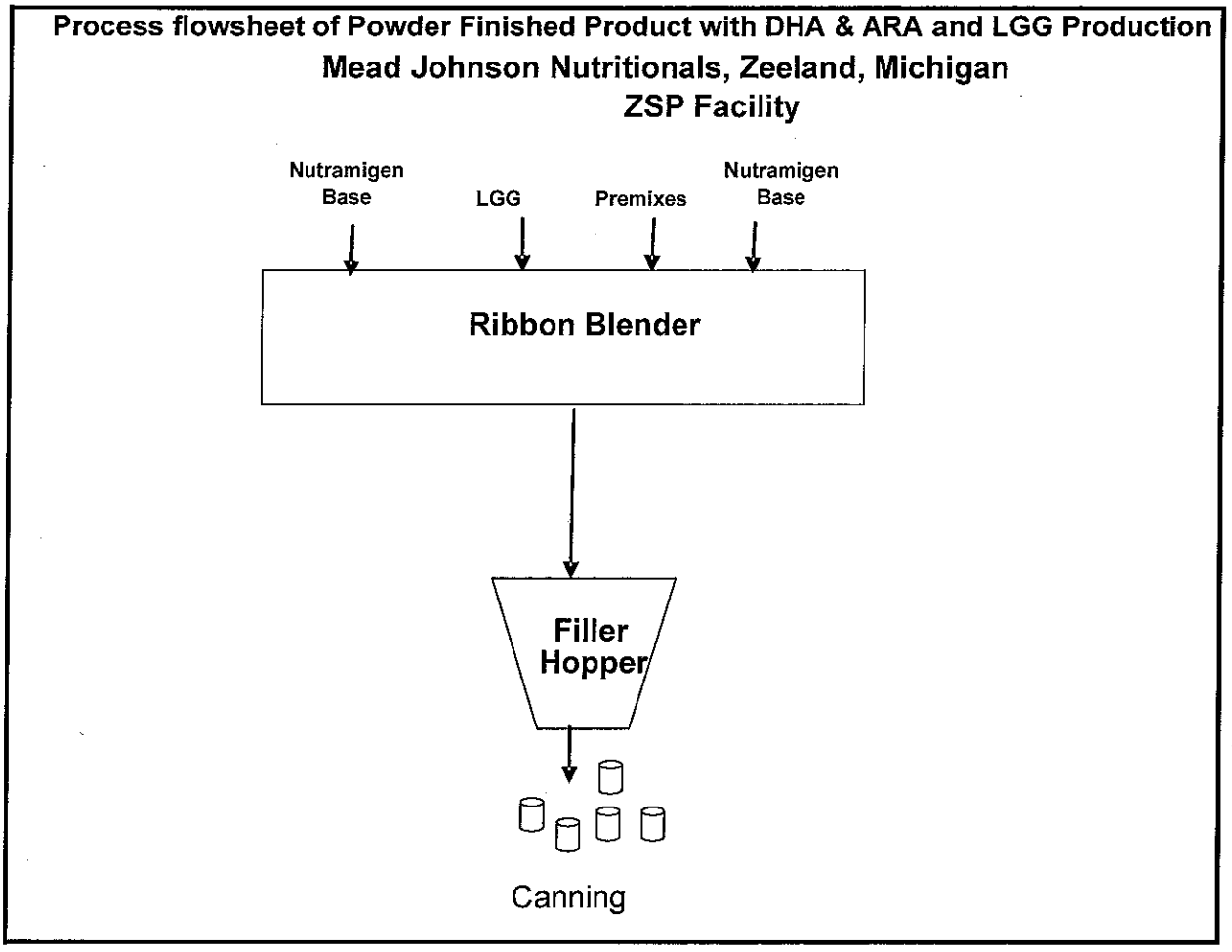

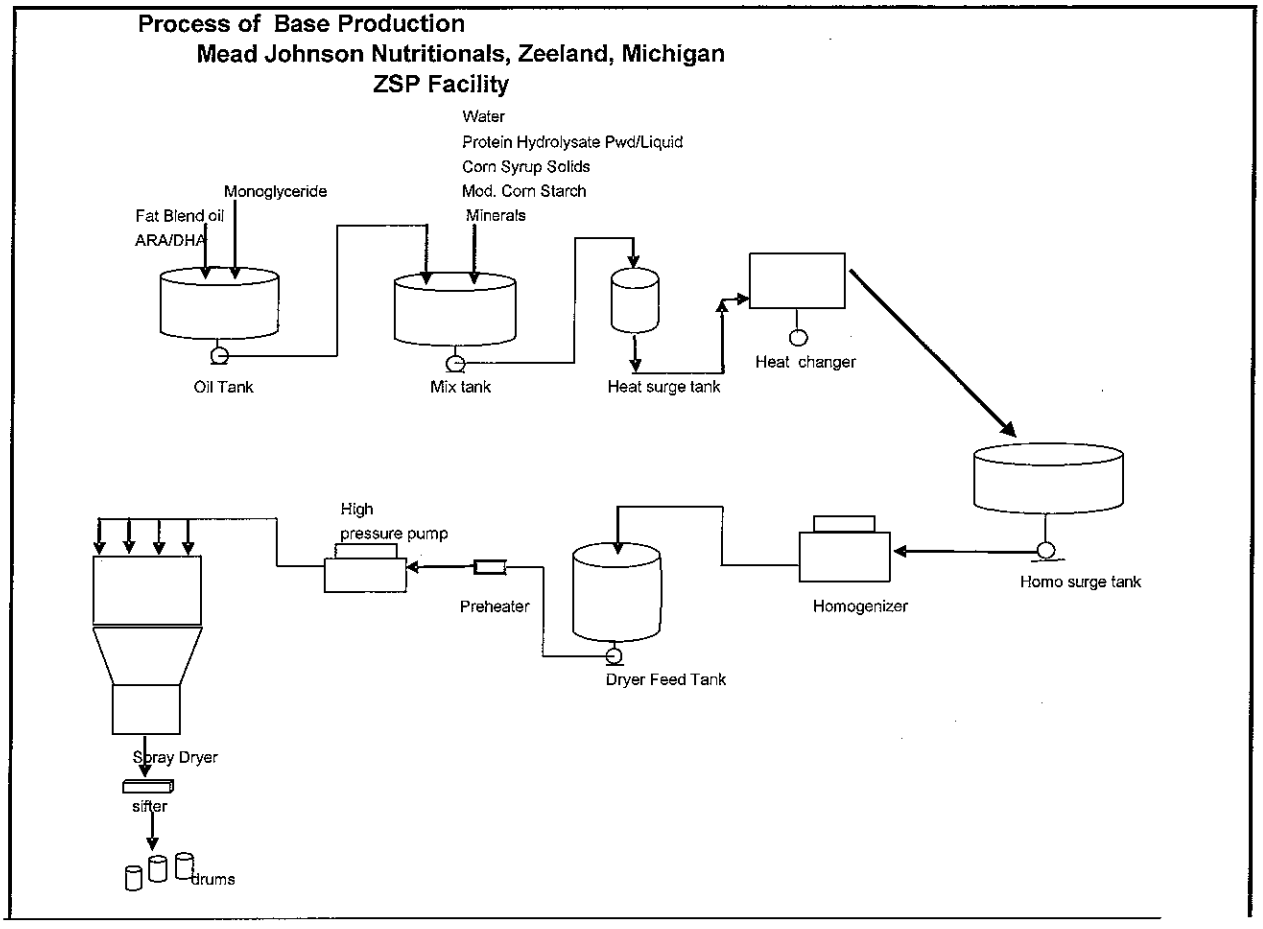

C. Specifications for Exempt Hypoallergenic Infant Formula Powder with Extensively hydrolyzed casein and without added MCT oil with DHA & ARA

The formulations for extensively hydrolyzed casein and without added MCT oil with DHA & ARA and LGG are identical to the formulations that are currently produced at Mead Johnson facilities with the following exceptions:

- 333.33 ppm of LGG powder is added to Exempt Hypoallergenic Infant Formula Powder with Extensively hydrolyzed casein and without added MCT oil with DHA & ARA (33.333 g/100kg powder).

- Carbohydrate content is reduced by 133 ppm of LGG powder is added to the extensively hydrolyzed casein and without added MCT oil with DHA & ARA (33.333 g/100 kg powder).Carbohydrate content is reduced by 133 ppm to account for carbohydrate content of LGG powder (on average 40% of LGG powder is sucrose).

- Because one-half of the sucrose content of LGG powder is fructose (66.66 ppm), it is appropriate to determine if there might be a potential risk to infants with hereditary fructose intolerance (HFI). Subjects with HFI have a reduced capacity to metabolize fructose and can present with symptoms of GI discomfort, hypoglycemia, nausea, vomiting, sweating or convulsions. Assuming a 90th percentile formula intake of 207 mL/kg bw per day, the daily intake of fructose from the extensively hydrolyzed casein and without added MCT oil with DHA & ARA is estimated at 1.9 mg/kg bw per day. This level of fructose is not be expected to provide a serious threat to individuals with HFI because studies have shown that fructose is tolerated by adults with HFI at 15-20 mg /kg bw per day (Briet *et al.*, 1995) and in a single infant with HFI at ~9.7 mg/kg bw per day (Barshop *et al.*, 2003).

II. ANALYTICAL METHODOLOGY FOR LGG

The principal means for identification of LGG is via traditional microbiological and biochemical methods, with PFGE used for strain confirmation and genetic stability assessment. The enumeration of lactobacilli from LGG powder is performed by Method G 8112 (attached as Appendix D), which is based on Fédération Internationale de Laiterie-International Dairy Federation (FIL-IDF) standard 117A:1988. This method is able to adequately differentiate and quantify viable LGG in the product.

V. STABILITY OF LGG

The stability of LGG is defined primarily by the viability of cells in the freeze dried powder and in the final infant formula. Stability depends on certain product characteristics, including packaging and the storage conditions of the powder and formula. Mead Johnson intends to add LGG powder at levels of 10^8 cfu of LGG per gram of powdered formula. This level of LGG has been demonstrated to ensure a minimum concentration of 10^6 cfu/g throughout the 12-18 month shelf life of the formula. Experimental studies have shown that this shelf life period is equivalent to storage of the product containing LGG at 30C at 50% relative humidity for 18 months.

The genetic stability of LGG following the manufacturing process and exposure to various conditions of environmental storage was assessed by comparison of PFGE profiles for LGG cultures before and after treatment (see Appendix E). Conditions that were evaluated for effects on LGG genetic stability included processing into finished product in both pilot plant and production facilities and storage in finished formula product at either 25°C for up to 80 weeks or 40°C for up to 12 weeks. Results using four different restriction endonuclease enzymes show that PFGE profiles of LGG isolates from infant formula powder samples were identical to the PFGE profiles of the starting LGG culture. These results suggest that the genome of LGG is stable under normal conditions of processing and storage in infant formula product.

Under standard recommended conditions of use, the ingestion of non-viable LGG from the extensively hydrolyzed casein and without added MCT oil with DHA & ARA is not anticipated to represent a safety concern. Other lactic acid bacteria, including various *Lactobacillus* spp., have been consumed for many years by both children and adults in a variety of product forms (*e.g.*, yogurts, fermented milks, dietary supplements, etc) without adverse effects.

III. HISTORY OF LGG USE IN FOOD

Lactobacilli have been consumed on a daily basis since humans started using fermented milks as food, including the probiotic use of certain *Lactobacillus* species for more than 75 years. (Salminen *et al.*, 1998). More specifically, since its discovery in 1985, LGG has been incorporated in a variety of food products consumed around the world, with the majority of these products sold in the EU and the U.S. LGG is added most commonly to dairy products, including yogurt, milk, and other dairy-based drinks. In addition, LGG is sold as a dietary supplement. A partial list of products containing LGG and the countries in which these products are sold is attached as Appendix F.

LGG is marketed as a starter culture in fermented foods and drinks in Denmark and the United Kingdom. In Japan, LGG is confirmed as a Food for Specified Health Uses (FOSHU) by the Japan Health and Nutrition Association. The Codex standards for infant formula (CODEX STAN 72-1981) and follow-up formula (CODEX STAN 156-1987, amended 1989) both list "L(+) lactic acid producing cultures" as approved food additives at levels subject only to good manufacturing practice (GMP).

Furthermore, as mentioned previously, Mead Johnson has added LGG to its Nutramigen line of infant formulas in the EU since 2003 at a level of 10^8 cfu/g powder (*i.e.*, 333 ppm of LGG powder or 33 g/100 kg powder). This level of LGG has been demonstrated to ensure a minimum concentration of 10^6 cfu/g throughout the 12-18 month shelf life of the formula. Through 2005, an estimated 51,900 infants may have been fed Nutramigen LGG, representing over eight million days of consumption (based on annual production and/or sales of marketed formulas).

Although there are no requirements for monitoring adverse events associated with intake of infant formulas in the EU, Mead Johnson has implemented a system to monitor product complaints, including those of a medical nature. Infants consuming Nutramigen LGG are typically under the supervision of a medical professional, increasing the chance that any product-related adverse events that occur are quickly identified and communicated to the appropriate individual. The product complaint system involves self-reporting of potential adverse events by consumers or health care providers within individual countries, with follow up by a Mead Johnson medical representative if warranted. These reports of adverse feeding experiences and any follow up are archived in written form within a centralized database. To date, no adverse effects have been reported to the manufacturer that could be ascribed to LGG. 3/

3/ From January 2003 through November 2006, Mead Johnson received 35 complaints regarding Nutramigen LGG (Stages 1 and 2) from consumers, hospitals, pharmacies and doctors. Only 6 of these complaints involved medical issues, consisting of two cases of allergic reactions, two cases of sickness or vomiting, one

VII. SAFETY OF LGG

The studies presented in this section provide a broad basis for establishing that LGG is generally recognized as safe for use in infant formula. As described in detail below, a large variety of in vitro studies, animal toxicity studies, and clinical investigations in both healthy and compromised populations have been conducted on LGG. Collectively, these studies demonstrate that the daily consumption of 10^8 cfu of LGG is generally recognized as safe for most infant populations. However, certain compromised infant populations, such as those with central lines, heart defects, or immune disorders (including severe combined immune deficiency syndrome (SCIDS)), are shown to have an increased risk of developing LGG-associated systemic infections.

A. *In Vitro* Studies

A variety of *in vitro* studies are used for evaluating characteristics of probiotic bacteria that may impact safety and efficacy *in vivo*. Gastrointestinal surfaces are dynamic, three-dimensional compartments composed of mucinous glycoproteins that flow on glycocalix over the epithelial cell membrane, which is convoluted into microvilli. (Sarem-Damerdji *et al.*, 1995). The "normal" intestinal

---

case of constipation, and one case of reduced growth due to a child's refusal to drink the formula. In both cases of reported allergic reactions, the children were tested at local hospitals with samples of casein hydrolysate and LGG. In one case, the child tested positive for the casein hydrolysate but not the LGG; in the other case, neither ingredient was found to elicit an allergic reaction. In the cases of reported sickness, one case involved formula well past its expiration date, while no problems were found with the formula in the other case and the complaint was rated not valid. The case of constipation also could not be confirmed but may have involved the administration of incorrect amounts of formula.

biota is composed of a variety of nonpathogenic, opportunistic, and pathogenic organisms, some of which have antibiotic resistance capabilities. Thus, the *in vitro* studies focus on a probiotic's potential to: (1) attach to intestinal cells, (2) degrade intestinal mucin, (3) exhibit other virulence factors, (4) transfer antibiotic resistance genes, and (5) impact the survival of other types of intestinal bacteria. Descriptions of the *in vitro* studies performed on LGG or other lactobacilli are presented below.

1. Ability to Adhere to Intestinal Cells

Although adherence of probiotic bacteria to intestinal surfaces is not confirmed to be required for health benefits, adherence generally is regarded to be a prerequisite for colonization, stimulation of the immune system, and for antagonistic activity against enteropathogens. *In vitro* cell culture systems are frequently used to assess the ability of probiotics to colonize, and potentially invade, intestinal epithelial cells.

Elo *et al.* (1991) tested the adhesive capacity of LGG from several sources and multiple lots of freeze dried cultures using the human colon carcinoma cell line Caco-2. Approximately 10^8 cfu of LGG was added to Leighton tubes containing 63,000 Caco-2 cells per cm^2, incubated for 30 minutes at 37°C, washed 3-4 times with phosphate buffered saline (PBS), fixed with acetone, stained with Giemsa solution for a couple of seconds, and mounted on light microscopy slides. The authors concluded: "LGG was shown to adhere well to the cell line independent of the source of bacteria" (*i.e.*, it was given a "+++" on a scale of "–" (no adhesion) to "+++++" (very strong adhesion)). (Elo *et al.*, 1991).

Sarem-Damerdji *et al.* (1995) studied the *in vitro* colonization ability of LGG and four other *Lactobacillus* strains in a human colon epithelium culture model. Approximately 2 x 10^8 cfu of LGG was placed in suspension with a 56 mm^2 sample of prepared colonic tissue, the culture was incubated for eight hours at 37°C, and the tissue was washed five times with PBS and divided for enumeration and electron microscopy. According to the authors, "good colonization was observed after addition of LGG," which "induced an intermediate bacterial colonization" (*i.e.*, it was given a "+" on a scale of "-" (negative colonization) to "++" (high colonization)). (Sarem-Damerdji *et al.*, 1995).

Ouwehand, *et al.* (2000) studied the adherence of several bifidobacteria and lactobacilli strains to a model of small intestinal mucus that consisted of human ileostomy glycoproteins. Approximately 10^7 cfu of radioactively labeled *Bifidobacterium lactis* Bb12, LGG, or one of three other lactobacilli strains was added to immobilized human ileostomy glycoproteins and incubated for one hour at 37°C. The adhered bacteria were released and lysed, and adhesion was expressed as the percentage of radioactivity recovered. A similar procedure was used with one of the four non-radioactively labeled Lactobacilli strains in combination with radioactively labeled *Bifidobacterium lactis* Bb12 (and *vice versa*), both sequentially and simultaneously, to test synergistic binding.

The authors found that all tested strains adhered well to the immobilized ileostomy glycoproteins. The binding of *Bifidobacterium lactis* Bb12 was found to be significantly enhanced from 18% when incubated alone to 44%

when incubated simultaneously with *Lactobacillus* GG, while the adhesion of *Lactobacillus* GG was not significantly affected. When one strain was allowed to bind prior to another one, the adhesion of both strains was similar to when incubated alone. The investigators concluded that "[t]hese results suggest that combinations of probiotics strains may have synergistic adhesion effects." (Ouwehand, *et al.*, 2000).

Due to its documented adhesion to adult human intestinal mucosa, ileostomy glycoproteins, and Caco-2 tissue culture cells, Kirjavainen *et al.* (1999) used LGG as the control in adhesion studies of bacteremia-associated lactobacilli strains.

While the specific mechanisms by which LGG (or other lactobacilli) adhere to host surfaces have not been defined, adherence to cultured intestinal cells or resected human colonic tissue was demonstrated in these *in vitro* studies. In an *in vivo* study with an *in vitro* analytical component, Alander *et al.* (1999), also found that LGG adhered to human intestinal mucosa. Twenty-one adult, healthy, human volunteers undergoing routine diagnostic colonoscopy were fed a daily dose of approximately 6 x 10^{10} cfu of LGG in a fermented whey drink for 12 days. The subjects underwent colonoscopy and intestinal adherence was assessed in colonic biopsy samples either immediately after the 12-day LGG administration (group A: 1 male, 5 females, 34 to 78 years old), one week after LGG administration (group B: 5 males, 3 females, 42 to 68 years old), or two weeks after LGG administration (group C: 4 males, 3 females, 27 to 73 years old). Fecal samples were taken at days 0, 4-9,

and 11-13 (post-initiation of LGG administration) for all groups; additional days 15-17 and 18-19 for groups B and C; and additional days 22, 24, and 26 for group C.

Biopsy and fecal samples of LGG isolates were confirmed by its characteristic colony morphology, a lactose fermentation test, and PCR. LGG was detected in biopsy specimens and final fecal samples of all group A subjects. In group B, LGG was detected in seven of the eight biopsy samples and in two out of eight final fecal samples. In group C, LGG was detected in two of the seven biopsy samples and in none of the final fecal samples. (Alander *et al.*, 1999).

The authors concluded that similar detection of LGG in the biopsy samples of groups A and B "indicates that [L]GG can survive in high numbers in colonic mucosae despite its rapid turnover. This finding suggests that *L. rhamnosus* GG can multiply on the colonic surface at a rate that partially counterbalances its shedding. However, as can be seen from the results from group C, even an adherent strain can be gradually diluted out of the colon unless it is replenished with a fresh inoculum. ... In accounting for the findings reported here, the study of fecal samples alone may underestimate colonization by probiotic strains." Neither the occurrence of any adverse health effects nor evidence of invasiveness was noted by the authors. (Alander *et al.*, 1999).

The *in vitro* assays described above demonstrate that LGG has a significant capability to adhere to intestinal surfaces.

2. Ability to Degrade Mucin

It has not been established whether probiotic bacteria adhere to epithelial cell surfaces or to the mucus layer covering the intestinal mucosa. Mucins are highly complex polysaccharides released from intestinal goblet cells that provide structure and viscosity to the mucus layer that covers the intestinal epithelial surface. The primary function of this layer is to protect the underlying epithelial cells from corrosive gastric acids, shear forces generated by the digestive process, and invasion by pathogenic microbiota. Thus, the potential for probiotic bacteria to degrade intestinal mucins is often evaluated as a potential virulence factor since damage or disturbance of the mucus layer could compromise the barrier function and lead to intestinal or other clinical infections.

While certain intestinal strains of lactobacilli are known to possess mucin-degrading activities, several studies suggest that probiotic strains, such as LGG, do not degrade intestinal mucins. Zhou, *et al.* (2001) studied the effects on hog gastric mucin of three potential LAB probiotic test strains, including *Lactobacillus rhamnosus* HN001, which is from the same species as LGG. No significant changes in the carbohydrate or protein concentrations of the mucin were found following incubation with the test strains, no mucin fragments were derived from the mucin suspension incubated with the test strains, and no mucinolysis zone was identified in agarose. The authors concluded: "These results demonstrate that the potential probiotic LAB strains tested ... were unable to degrade

gastrointestinal mucin *in vitro*, which suggests that these novel probiotic candidates are likely to be non-invasive and non-toxic at the mucosal surface."

Ruseler-van Embden, *et al.* (1995a and 1995b) studied the effect of LGG and several other strains of probiotic bacterial cultures on hog gastric mucin and human intestinal glycoproteins and measured mucus degradation by assaying carbohydrates, proteins, and blood group antigenicity. The authors reported: "All strains colonized the intestinal mucus but were not found in the deep cysts. Degradation of mucus glycoproteins was observed neither *in vitro* nor *in vivo*." Corresponding *in vivo* tests, in which LGG was added to the drinking water of germ-free and gnotobiotic rats at a concentration of 5×10^8 bacteria/mL for 10 days prior to sacrifice, showed similar results. The authors concluded that "[t]he tested strains do not break down intestinal mucus glycoproteins and thus far are safe to use for therapy." (Ruseler-van Embden, *et al.*, 1995a and 1995b).

Collectively, these studies suggest that LGG does not break down mucins in either *in vitro* models or germ-free rats.

3. Other Virulence Factors

Attributes or components that allow bacteria to overcome host defenses and cause infections are known as virulence factors. Accordingly, harmless bacteria associated with the normal biota are typically distinguished from disease-causing microbes by the absence of virulence factors. Examples of virulence factors include the ability to invade host tissues, to avoid immune elimination, and to produce

toxins that harm the host. Furthermore, the ability of indigenous or probiotic bacteria to adhere to platelets is often evaluated as an indication of the potential for undesirable binding to non-mucosal host cells.

Studies by Harty *et al.* (1993a, 1993b, 1994) showed that certain indigenous and clinical isolates of lactobacilli – including strains of *Lactobacillus rhamnosus* (though not LGG, specifically) – isolated from patients with infective endocarditis, are capable of binding or aggregating blood platelets. However, platelet aggregation was not restricted to those species implicated in endocarditis. (Harty *et al.*, 1993b). Korpela *et al.* (1997) demonstrated that concentrations of LGG as large as 10^9 cfu/mL do not induce aggregation of human platelets.

Oakey *et al.* (1995) found that isolates of lactobacilli (though not LGG specifically) from patients with endocarditis produce certain enzymes that "may enable the breakdown of human glycoproteins and the synthesis and lysis of human fibrin clots, characteristics which aid the colonization and survival of bacteria infecting an endocarditis vegetation."

In conclusion, the results from the above studies involving probiotic lactobacilli, including LGG, show little evidence for the existence of virulence factors related to adhesion to host cells or enzyme activity related to disease progression. While some strains of lactobacilli are capable of causing platelet aggregation, LGG does not appear to possess this potential virulence factor.

4. Transfer of Antibiotic Resistance Genes

It is generally accepted that intrinsic resistance to specific antibiotics among normal intestinal biota may become a health and safety issue if such resistance can be transferred to potential pathogens, thereby negatively impacting the therapeutic effectiveness of the antibiotic. (Salminen and von Wright, 1998). Antibiotic resistance plasmids are of particular concern because they can be easily transferred among different species and genera of bacteria through a process known as conjugation. Probiotic strains that contain genetically transmissible genes, such as those providing antibiotic resistance, present a safety concern due to the potential for exchange of harmful genes to pathogenic bacteria.

As described earlier, a variety of different *Lactobacillus rhamnosus* strains, including LGG, have been demonstrated to be intrinsically resistant to clinically important antibiotics such as vancomycin (Charteris *et al.*, 2001; Salminen *et al.*, 1998). Vancomycin resistance in lactobacilli is most often chromosomal and not plasmid mediated. In conjugation experiments with strains of enterococci, Tynkkynen *et al.* (1998) showed that LGG does not contain plasmids and is unable to transfer its chromosomal vancomycin resistance genes to enterococcal strains via conjugation. As described previously, unpublished genetic sequencing information for LGG corroborates this suggestion that resistance is a property of cell wall structure by indicating that no analogs to any known vancomycin gene are present. Therefore, it does not appear that LGG can transmit vancomycin resistance genes to other organisms, especially enterococci. Moreover,

as previously described, LGG is susceptible to a number of other antibiotics in the rare event that this strain is associated with a clinical infection. (Charteris *et al.*, 2001).

5. Impact on Intestinal Bacteria

LGG metabolizes common dietary nutrients and generates metabolic end products that may in turn impact the survival or translocation of other types of intestinal bacteria. Silva *et al.* (1987) evaluated the antimicrobial effect of LGG against a wide range of bacterial species via microbiological assay. LGG was found to inhibit anaerobic bacteria (*Clostridium* spp., *Bacteroides* spp., and *Bifidobacterium* spp.), members of the *Enterobacteriaceae* family, *Pseudomonas* spp. *Staphylococcus* spp., and *Streptococcus* spp. The inhibitory activity occurred at pH 3 – 5 and was found to be heat stable in research during which a 10-fold concentrate of LGG was heated at 90°C for one hour and autoclaved at 121°C for 15 minutes. The growth of other lactobacilli was not inhibited. The authors concluded:

> The inhibitory substance produced by *Lactobacillus* sp. strain GG, even though it is produced by a gram-positive organism, has a low molecular weight and is active against a broad spectrum of gram-negative and gram-positive organisms, including lactic acid bacteria, but not against other lactobacilli. These characteristics make the substance different from the bacteriocins (which are generally produced by gram-positive bacteria, have high molecular weights and are susceptible to proteases, and have a spectrum of antimicrobial activity limited to related species).

Meurman *et al.* (1995) studied the inhibitory effect of LGG on the growth of oral streptococci. The microbial inhibitory substance was isolated from LGG cultures grown in two different media and added to suspensions of *Streptococcus sobrinus*, *S. sanguis*, and *S. salivarius*, and *S. faecalis*. The authors found:

> The inhibitory ability of the isolated substance was weak, but some growth inhibition was observed in *Streptococcus sobrinus* pretreated with the substance relative to untreated controls. Zones of growth inhibition were apparent only at pH values below 5, indicating that the inhibitory activity was restricted to a low pH range. Growth curve experiments showed a statistically significant inhibition between series with and without the isolated substance ($P<0.05$). The ultrastructure of *S. sobrinus* was not affected when treated with the inhibitory substance.

Thus, it appears that LGG produces substance(s) that inhibit various strains of streptococci (and possibly other target bacteria) to help establish a presence among other bacteria (both pathogens and commensal).

As described in the "Repeated Dosing Studies" section, below, Lee *et al.* (2000) demonstrated that enterally-administered LGG decreases the frequency of *E. coli* K1A translocation in a neonatal rabbit model. Mattar *et al.* (2001) attempted to build on these findings in investigating whether LGG was effective in reducing the rate of *E. coli* C25 translocation using an *in vitro* cell-culture model derived from Caco-2 enterocytes. Concentrations of LGG ranging from 10^4 to 10^8 cfu, along with negative controls, were incubated with the Caco-2 enterocyte monolayers at 37°C

for 180 minutes prior to a 120 minute incubation period with 10^5 cfu of *E. coli* C25. The integrity of the monolayer was measured with transepithelial electrical resistance. The authors observed that "LGG inhibited *E. coli.* C25 translocation at all LGG concentrations tested," which "appears to be secondary to an interaction between probiotic and enterocyte."

These studies suggest that LGG may have a beneficial effect on the host by inhibiting the growth of a variety of potentially pathogenic intestinal bacteria and decreasing the frequency of translocation of others.

B. Toxicity Studies

The safety and toxicity of several probiotic strains, including LGG, have been evaluated and subjected to testing in both healthy and compromised animals. A brief review of these toxicity studies is presented below.

1. Acute Toxicity

Donohue *et al.* (1993) conducted an acute toxicity study in healthy, adult, male Swiss mice with several strains of probiotic bacteria that belong to the genera *Streptococcus, Lactobacillus* (including LGG), and *Bifidobacterium*. Graduated doses of 0, 1, 2, 4, and 6 grams of the test bacteria per kilogram body weight (0, 1.5×10^{11}, 3×10^{11}, 6×10^{11}, and 9×10^{11} cfu/kg b.w.) were administered by gavage to test groups of five mice apiece, and the animals were observed twice daily for a seven day period between dosing and necropsy.

There were no significant changes observed in animal behavior, food intake or body weight during the seven day evaluation period. No treatment-related deaths or signs of toxicity were observed between groups, and no remarkable changes reported for gross appearance of internal organs. No toxic effects were observed for any of the organisms or doses administered, although a trend towards lower specific growth rate was observed at the highest dose of LGG. (Donohue *et al.*, 1993).

The researchers concluded that "the acute oral LD_{50} of each organism after seven days for male Swiss mice is greater than 6 g/kg body weight [>9 x 10^{11} cfu/kg b.w.], and the tested strains can be considered nontoxic in an acute test system." The researchers added: "Although extrapolation of oral LD_{50} values from animals to humans has limited validity, the values observed in this study would correspond to a dose of more than 420 g of washed freeze-dried bacteria for a 70 kg human." (Donohue *et al.*, 1993).

2. Repeated Dosing Studies

The safety and toxicity of LGG have been evaluated in several repeated dosing studies where animals were treated experimentally to increase susceptibility to potential adverse effects from the probiotic strain. The effect of LGG on lethally irradiated mice was studied by Dong *et al.* (1987). Approximately forty CD1 mice, 21-28 days old, were divided such that half were fed approximately 3.5-4.0 x 10^{10} cfu/day of LGG via suspension in drinking water available *ad libitum*. Ten days after commencing administration of LGG, the mice were irradiated with

1400 rads, and feeding of LGG was continued. Consecutive experiments, which differed only as to diet (chow versus meat), were conducted.

Both experiments showed a significant reduction in mortality for the LGG-fed animals relative to controls over the initial 48 hours after death began in these animals (*i.e.*, starting at day 4 post-irradiation). Thereafter, the mortality in the experimental and control groups converged to yield no significant differences. Bacteremia was present in all dead mice, although no lactobacilli were isolated in any blood culture. The LGG-fed mice were observed to have more streptococcal isolates than controls and fewer gram-negative enteric organisms. In addition, in one of the experiments, the administration of LGG appeared to correspond to a reduction in *Pseudomonas* bacteremia. The authors concluded:

> By feeding *Lactobacillus* GG strain, there was a reduction in *Pseudomonas* bacteremia, leading to a prolongation of survival in groups of mice colonized by this organism. Even in the mice without *Pseudomonas* colonization, *Lactobacillus* GG somewhat extended survival times and reduced Gram-negative bacteremia. In addition, there was no evidence of *lactobacillus* bacteremia in the fed animals. Hence *Lactobacillus* GG is a noninvasive organism, which may reduce Gram-negative bacteremia and prolong survival in irradiated mice. (Dong *et al.*, 1987).

Lee *et al.* (2000) evaluated the effect of LGG administration on the bacterial translocation of ampicillin-resistant *Escherichia coli* K1 (EK1) in newborn New Zealand white rabbit pups. The pups were separated into three test groups plus controls and were administered either 10^8 cfu of LGG, EK1, or a combination of

the two twice daily for two days. The pups were sacrificed on day three, the tissue specimens were aerobically incubated for 48 hours on selective media, and any resulting LGG or EK1 colonies were assessed.

The investigators found that neonatal rabbits that were fed LGG exhibited a 25 percent decrease in small bowel colonization by EK1. Furthermore, the bacterial translocation of EK1 to the mesenteric lymph nodes, spleen, and liver were all significantly reduced in these animals. No mucosal damage was detected in the small bowel of any group of animals. Bacterial translocation of LGG to these extraintestinal sites was observed at a very low frequency (1 of 8 pups in LGG group; 1,2, and 4 of 33 pups in the LGG + EK1 group, depending on tissue). (Lee *et al.*, 2000).

The authors concluded that LGG

> ... inhibited the colonization of *E. coli* K1A and its translocation to extraintestinal sites. In previous studies, the incidences of [bacterial translocation] and dissemination were used as indicators of the integrity of the [gut mucosal barrier]. Thus, our results imply that *Lacto* GG was able to stabilize the immature [gut mucosal barrier], establishing its efficacy as a probiotic in the neonatal rabbit model."

The authors also noted "Although there was no apparent clinical distress among the pups infected with *Lacto* GG, evidence of any translocation of putative probiotic is a cause for concern, especially in immunodeficient hosts such as the neonate." (Lee *et al.*, 2000).

As part of a larger study, Naaber *et al.* (1998) observed the effects of LGG administration on antibiotic-compromised, adult, Syrian hamsters that were infected with *Clostridium difficile*. Intragastrically, the hamsters received a single 3 milligram dose of ampicillin and were challenged with *C. difficile* 24 hours later. The animals were administered either nothing additional or 0.5 mL of LGG in broth culture (no specific LGG dose was specified by the investigators) and one mL of 20% xylitol solution once daily starting 20 hours prior to the *C. difficile* challenge and continuing for five days until sacrifice.

LGG was not found among translocating lactobacilli, despite the fact that it was present in intestinal cultures from all LGG-treated animals, and it did not become predominant in the intestinal microbiota. Four of the five hamsters receiving probiotics remained healthy, and the inflammatory changes in their intestinal mucosa were milder. (Naaber *et al.*, 1998).

Pessi *et al.* (1998) studied the effects of LGG administered with different diets on macromolecular degradation in the gut mucosa of neonatal rats. Fourteen day old rat pups were divided into five feeding groups, which, in addition to maternal milk, were administered by daily gavage either: (1) bicarbonate buffer (controls) (2) cow's milk, (3) cow's milk and 10^{10} cfu of LGG, (4) extensively hydrolyzed whey formula, or (5) extensively hydrolyzed whey formula and 10^{10} cfu of LGG. After a seven day test period, the animals were sacrificed, and the absorption of macromolecules, horseradish peroxidase (chosen to represent the molecular weight and intestinal transport properties of dietary antigens), and ß-

lactoglobulin across patch-free jejunal segments was studied in Ussing chambers, while the degree of macromolecular degradation was studied by means of HPLC gel filtration. Intestinal function and tissue damage was assessed by monitoring various electrical parameters with a voltage clamp: potential difference (PD), electrical conductance (G) and short circuit current (I_{sc}).

The authors observed that the absorption rate of intact horseradish peroxidase across the jejunum was significantly different in the feeding groups, with higher rates in the milk and hydrolysate groups than the controls, while supplementation with LGG restored both rates to the control level. For ß-lactoglobulin, a greater absorption rate was observed in the milk group, relative to controls, while the milk-LGG, hydrolysate, and hydrolysate-LGG groups did not differ from controls. The addition of LGG to milk was observed to increase the transport of degraded horseradish peroxidase relative to milk alone, while the addition of LGG to hydrolysate was observed to reduce the transport of degraded horseradish peroxidase relative to hydrolysate alone. During the study, absorption of intact proteins was not increased and electrical parameters were unchanged, which indicated LGG supplementation did not result in dysfunction of the gut mucosa or tissue damage. (Pessi *et al.*, 1998)

The authors concluded:

> Our primary result indicates that probiotics restore aberrant macromolecular transport, suggesting their potential use in reversing increased mucosal permeability in gut inflammation. In addition,

> probiotic bacteria were here identified with a contributory role in mucosal degradation of antigens when antigen content of the diet is enriched. It is intriguing to find that the more reduced the antigen content of the diet, the less pronounced is the effect of probiotic bacteria on mucosal degradation. (Pessi *et al.*, 1998).

Collectively, the repeated dosing studies described above demonstrate that no evidence of bacteremia or other types of infections were reported in studies with immune compromised mice, antibiotic-treated hamsters, neonatal rats, and neonatal rabbits following short term feeding of LGG at levels as high as 5 $x10^{10}$ cfu/day.

The potential for LGG to cause infections was also evaluated in extremely immune deficient beige-athymic (*nu/nu*), germ-free, neonatal mice. Wagner *et al.* (1997a) "evaluated the capacity of probiotic bacteria to colonize and infect congenitally immunodeficient germfree (GF) beige-athymic (bg/bg-nu/nu) and beige-euthymic (bg/bg-nu/+) mice." The probiotic bacteria included *Lactobacillus acidophilus*, *Lactobacillus reuteri*, *Lactobacillus casei* GG and *Bifidobacterium animalis*. "The bacteria colonized and persisted in pure culture, in the alimentary tract of both mouse strains for the entire period of study (12 weeks)." Translocation was observed for 3 of the 4 probiotic strains, including about 27 percent for LGG in both strains of mice. *L. acidophilus* and *B. animalis* were also shown to translocate in both strains of mice at rates of 30-52 percent and 31-55 percent, respectively. Adherence of the bacteria to the mucosal and sub mucosal regions of the stomach and small intestine was reported and there was no evidence of pathological changes

in the gastrointestinal tract or internal organs. "Colonization with probiotic bacteria did not appear to affect reproduction." "The probiotic bacteria neither retarded nor enhanced the growth of both male and female (athymic or euthymic) mice." "LGG did not significantly affect body weight gain in adult mice and offspring of LGG-colonized mothers." Colonization was associated with an increased production of antibodies in the serum but no increase in lymphocytes. Probiotics, including LGG, did not affect survival of either strain of adult mice, euthymic newborn mice born to probiotic colonized mothers, or athymic 8-12 week old mice born to probiotic colonized mice. In the most severely compromised group, 0-4 week old athymic mice, there was a significant increase in mortality in pups born to mothers colonized with *L. reuteri* (21%) or LGG (36%). These germ-free neonatal beige-athymic (bg/bg-nu/nu) mice represent an extreme in underdevelopment and immunodeficiency (lack NK cell activity, phagocytosis, and T-cell mediated immunity).

In a subsequent study, Wagner *et al.* (1997b) "assessed the ability of four probiotic bacterial species, *L. acidophilus, Lactobacillus reuteri, L. casei* GG and *Bifidobacterium animalis*, to protect immunodeficient bg/bg-nu/nu and bg/bg-nu/+ mice from mucosal candidiasis and systemic candidiasis of endogenous (alimentary tract) of origin." "Each bacterial species and *Candida albicans* colonized the gastrointestinal tracts of both strains of mice." "None of the probiotic bacteria species completely prevented mucosal candidiasis, but *B. animalis* reduced its incidence and severity." "Probiotic bacteria also modulated antibody- and cell-

mediated immune response to *C. albicans*." The data support the summary and conclusion that "[t]he prolonged survival of mice, decreased severity of mucosal and systemic candidiasis, modulation of immune responses, decreased number of *C. albicans* in the alimentary tract, and reduced number of orogastric infections demonstrated not only that probiotic bacteria have biotherapeutic potential for prophylaxis against and therapy of this fungal disease but also that probiotic bacteria protect mice from candidiasis by a variety of immunologic (thymic and extrathymic) and nonimmunological mechanisms in this model."

In summary, the weight of the available evidence (absence of bacteremia and deaths in immune competent neonatal rodents (Lee *et al.*, 2000; Pessi *et al.*, 1998) and absence of LGG- induced toxicity in highly compromised, germ free, athymic (bg/bg-nu/nu) neonatal mice (Wagner *et al.*, 1997a, 1997b) supports the safety of LGG in healthy and immunocompromised animals and, by extrapolation, safety in healthy humans.

C. Human Studies

As discussed in detail in the following sections, the clinical studies on LGG convincingly establish that it is generally recognized as safe in infant formula. In these studies, the researchers typically administered LGG at levels ranging from 10^8 to 10^{10} cfu per day for as long as six months with no evidence of adverse reactions.

1. Studies in Healthy Subjects

A number of clinical studies have reported on the effects of LGG in healthy adults, young children, and term and preterm infants. These studies, described below and summarized in Table 1, evaluated a number of characteristics of LGG, including the ability to colonize the intestinal tract and the resulting impact on intestinal bacteria, the ability to prevent various types of common pediatric infections, and the ability to prevent or treat diarrhea associated with antibiotic use, and the impact on host nutrition.

a) Colonization of the Intestinal Tract

The ability of probiotic strains to survive gastric transit varies greatly as some strains are killed rapidly in the stomach while others reach the intestines in high numbers. Based primarily on excretion studies, LGG has been demonstrated to survive gastric transit and colonize the gut temporarily. (Note that although the term "colonize" likely is not the most appropriate terminology to describe the temporary establishing of residence in the gut, it is used here because it reflects the terminology most commonly utilized in the studies described below.) The following are brief descriptions of studies performed in healthy adult and term and preterm infant populations.

(1) Colonization in Adults

Saxelin *et al.* (1991) performed a dose response study in approximately 40 healthy, adult volunteers to determine the fecal colonization of LGG. Subjects were fed freeze dried LGG powder once a day for seven days at doses of 1.5×10^6,

1.5×10^7, 1.5×10^8, 1.5×10^9, 1.5×10^{10}, and 1.1×10^{11} cfu per day. Fecal specimens were collected prior to the administration of LGG and daily during the treatment period and were analyzed for total lactobacilli and LGG.

No safety-related endpoints were discussed by the authors, and no specific adverse effects were reported. With an analytical limit of detection of 10^3 cfu per gram of feces, no LGG was detected in fecal samples prior to the dosing period, and none was detected in the fecal samples of the 10^6-10^8 dosing groups during administration. Two of seven subjects in the 10^9 dosing group were colonized with LGG at a detectable level sporadically during the test period, while all subjects in the 10^{10} and 10^{11} test groups were colonized at fecal levels of 10^5 - 10^7 cfu per gram. The analyses of total lactobacilli demonstrated that LGG was never the dominating strain in the feces and did not appear to influence the total number of lactobacilli found. (Saxelin *et al.*, 1991).

In a set of experiments, Goldin *et al.* (1992) studied the survival of LGG in the human gastrointestinal tract. In an *in vitro* analysis, a concentration of approximately 10^8 cfu per milliliter of LGG was shown to grow in human gastric juice at pH levels as low as 3.0. Subsequently, 76 healthy male and female adult volunteers were fed LGG as either a frozen concentrate (for 28 days), a fermented milk (for 7 days), or a fermented whey drink (for 35 days). Daily doses were 4×10^{10} cfu, 3.6×10^{11} cfu, and 1.6×10^{11} cfu, respectively. Survival of LGG in the gut was determined by culturing fecal specimens during the dosing periods as well as three and seven days after the feeding of LGG was discontinued.

No safety-related endpoints were discussed by the authors, and no specific adverse effects were reported. LGG was recovered in the feces of all subjects receiving the fermented milk or whey and in 86 percent of those receiving the frozen concentrate. LGG was found to persist in the feces of 87 percent of the study subjects three days after the feeding was discontinued and in 33 percent of subjects seven days later. The authors concluded: "These studies demonstrate that *Lactobacillus* GG can survive and temporarily colonize the human gastrointestinal tract and can affect the metabolic activity of the resident microflora." (Goldin *et al.*, 1992).

Saxelin *et al.* (1993) studied the fecal concentrations of LGG in 44 healthy human adults who were fed either enterocoated tablets with daily doses of 1 x 10^9, 4 x 10^9, and 8 x 10^9 cfu of LGG or fermented milk with daily doses of 2.1 x 10^9 and 1.2 x 10^{10} cfu of LGG for seven days. Fecal specimens were collected prior to LGG administration and daily during the test period.

No safety-related endpoints were discussed by the authors, and no specific adverse effects were reported. LGG was found in the feces of all subjects by day three of the test period. While there were no statistical differences in mean fecal LGG count between any of the groups administered LGG in tablet form, a significant increase was observed in the higher of the two groups administered LGG in fermented milk relative to the lower dosage group. "[LGG] administration did not influence the total numbers of faecal lactobacilli." The authors concluded: "The

results indicate that fermented milk and enterocoated tablets are good carriers for administering *Lactobacillus* GG as a probiotic organism." (Saxelin *et al.*, 1993).

Fecal recovery of LGG and total lactobacilli after administration of LGG via gelatin capsule were studied by Saxelin *et al.* (1995). Twenty healthy human adults were given daily doses of 1.6×10^8 and 1.2×10^{10} cfu of LGG for seven days, and fecal samples were collected prior to LGG administration and on test days three, five, and seven.

No safety-related endpoints were discussed by the authors, and no specific adverse effects were reported. While none of the subjects had detectable LGG in the feces prior to administration, LGG was detected in the feces of all subjects in the higher dosage group by day three of the test period. In contrast, only one (of 10) subjects in the lower dosage group had detectable LGG in the feces by the end of the test period. "No effect was observed on the total number of fecal lactobacilli." (Saxelin *et al.*, 1995).

These studies show that LGG is able to survive gastric transit, becomes established in the intestinal tract, and is present in the feces of treated adults. No safety-related endpoints were discussed by the authors, and no specific adverse effects were reported. No effects are expected in the total number of fecal lactobacilli because the amount of LGG administered is several orders of magnitude less than the lactobacilli and overall bacteria resident in the gastrointestinal tract. Fecal levels in adults typically decreased over a several week period after

administration of LGG was discontinued. Saxelin *et al.* (1993) showed that intestinal colonization is enhanced when LGG is administered in a milk-based carrier, suggesting that neutralization of gastric acid increases survival of LGG during gastric transit.

(2) Colonization in Term and Preterm Infants

Three studies in healthy, term infants and four studies in healthy, preterm neonates further demonstrate the ability of LGG to survive gastric transit. Sepp *et al.* (1993) studied the capability of LGG to colonize the intestinal tract of newborn, full-term infants and the influence of its administration on the establishment of the intestinal microbiota. Twenty-five infants were studied over their first month of life. Over the first two weeks after birth, 15 infants received either breast milk or breast milk and formula with freeze-dried LGG powder diluted in water at a daily dose of 10^{10}-10^{11} cfu per gram, while the remaining 10 infants served as controls and received only breast milk. The first meconium of 21 of the infants was studied, along with the feces of 15 infants on days 3-4, 17 infants on days 5-7, and 23 infants on days 28-32.

No safety-related endpoints were discussed by the authors, and no specific adverse effects were reported. The fecal microbiota of the meconium of both the control and test group was similar, and LGG was not detected (detection limit of 10^3 cfu/g). LGG was detected in the feces of nine infants of the test group during the administration period and in eight infants of the test group two weeks after administration ended, with overall detection in 10 members (67%) of the test group.

The fecal concentrations and relative proportions of LGG differed by subject. LGG also was detected repeatedly in one of the control group infants. While the fecal concentrations of lactobacilli in the group administered LGG was consistently greater than that of the controls, the predominance pattern of the intestinal microbiota in the test group did not change over the course of the month (*i.e.*, > 50% of the total microbes were similar in both study groups). The authors concluded "The study shows that 2 wk administration of *Lactobacillus* GG, which starts right after birth, increases intestinal lactobacilli concentrations and does not impair the establishment of normal fecal microbiota." (Sepp *et al.*, 1993).

Petschow *et al.* (2003) compared the intestinal colonization and tolerance of different doses of LGG in healthy, full-term infants. Forty-nine infants, zero to three months of age, were fed, Nutramigen LGG a hydrolyzed, casein-based infant formula, supplemented with 0, 10^8, 10^9, or 10^{10} cfu of LGG per day for 14 days. The infants were fed unsupplemented formula for a seven day baseline period before LGG administration and for a 14 day follow-up period afterwards. Stool characteristics and tolerance symptoms were recorded daily, and levels of viable LGG were evaluated in stool samples obtained on days 3, 6, 9, and 12 of the test period and days 15, 21 and 28 of the follow-up period.

"Stool consistency, flatulence, and fussiness were similar among all groups." No other safety-related endpoints were discussed by the authors, and no specific adverse effects were reported. LGG was detected in significantly higher percentages of infants fed LGG than infants in the control group: 2 of 12 controls, 8

of 12 in the 10^8 dose group, 11 of 13 in the 10^9 dose group, and 10 of 12 in the 10^{10} dose group. Furthermore, compared to the control group, a statistically greater number of infants in the 10^8 and 10^{10} dose groups had LGG in the feces seven days after LGG administration ended, with similar results for the 10^8 dose group 14 days after LGG administration. The authors concluded: "Feeding LGG at 10^8 – 10^{10} cfu per day was well tolerated and led to transient colonization in healthy term infants. LGG colonization was apparently not related to level of LGG administered and tended to decrease 2 weeks after feeding supplemented formula." (Petschow *et al.*, 2003).

Vendt *et al.* (2006) evaluated the influence of LGG-enriched formula on the growth and fecal biota of healthy Estonian infants up to six months of age in a randomized, double-blind, placebo-controlled study. One hundred and twenty infants (60 boys, 60 girls) of ages 0-2 months (average age of 37.4 days for the LGG group and 42.2 days for the controls) were enrolled and divided equally into the treatment and control groups. The test infants were fed a cow's milk-based formula enriched with 10^7 cfu of LGG per gram of formula, while the control infants were fed regular formula. Infants participated in the study until they reached the age of six months. Infants who were breast-fed for more than half of daily feedings were excluded from the study. The infants underwent clinical examination monthly during the study; any respiratory and gastrointestinal symptoms, along with maternal estimates of the infant's fecal consistency were recorded monthly; and a general health questionnaire was collected at the end of the study. Summative

indexes during the whole study period were formed for the main parameters of tolerance (*i.e.*, crying, consistency of feces, and rash at clinical examinations).

One hundred and five infants completed the study (LGG group n = 51, placebo group n = 54). Reasons for discontinuation from the study were similar in both groups (LGG/control) and consisted of colic pain (n = 1/3), cow's milk protein intolerance (n = 2/1), constipation (n = 1/1), diarrhea (n = 2/0), or excessive breastfeeding (n = 2/2). Mean formula intake increased during the course of the study from 623 mL at study entry to 803 mL at three months to 933 mL at six months, providing a minimum daily dose of LGG that increased from 8.1×10^8 to 1.0×10^9 to 1.2×10^9, respectively. 4/ The authors noted

> During the intervention there were no differences between the groups regarding crying behavior (sum of hours in study period 6.2 ± 1.8 in the LGG group versus 6.1 ± 1.4 in the placebo group). There were 0.90 ± 0.70 infectious episodes in the LGG group and 0.75 ± 0.68 cases in the placebo group. The LGG group had a significantly higher defecation frequency 9.1 ± 2.6 versus 8.0 ± 2.8 ($P < 0.05$) and greater summative indexes of loose stools 9.5 ± 1.2 versus 10.2 ± 1.7 ($P < 0.05$) than the placebo group.

The authors concluded "[t]he LGG-enriched formula was well-tolerated ...." No other safety-related endpoints were discussed by the authors, and no specific adverse effects were reported. (Vendt *et al.*, 2006).

4/ The daily dose of LGG is based on a formula preparation, confirmed by the authors of the study through personal correspondence, in which 130 g dry formula is mixed with 900 mL of water to yield 1 liter of finished formula.

Infants receiving LGG-supplemented formula showed significantly greater increases in length and weight at the end of study compared to infants receiving regular formula. The authors reported:

> Despite randomization, the infants in the LGG group were significantly smaller at entry, and a few days younger than in the placebo group. Also, when expressed in length and weight [standard deviation scores] units, the groups differed significantly, meaning that the effect was not due to differing ages. The babies in the LGG group were also smaller than average babies in the Estonian population. We do not know the reason for that, since the baseline and background characteristics were similar in both groups. (Vendt, *et al.*, 2006).

Average daily consumption of formula during the study was determined by a daily maternal log. Formula intake did not differ at the beginning and at 3 months; at 6 months formula intake was significantly greater in the LGG group (933 ± 368 mL) compared to the control group (789 ± 277 mL). The authors concluded that the amount of supplemental food allowed after 3 months of age was small and therefore considered not to be a significant contributor to growth. The catch up of length and weight of the LGG group babies was evident in three months of the study. At the age of six months there were no more differences between the groups. (Vendt *et al.*, 2006).

Fecal samples from a randomly-selected cohort of 25 infants (12 fed LGG and 13 controls) were taken at enrollment in the study and at age six months. Analyses of the fecal samples revealed that 50 percent (6 of 12) of the infants in the

LGG group and 46 percent (6 of 13) of the infants in the control group harbored lactobacilli, as analyzed by the plate count method. Microbial plate analysis with PCR confirmation showed two of the 12 infants in the LGG group and one of the 13 infants in the control group to be harboring LGG. By the end of the study period, the colonization frequency by lactobacilli was increased to 91 percent (11 of 12) in the LGG group, with LGG isolated from nine infants. In the control group, lactobacilli frequency increased to 71 percent (10 of 13), with LGG isolated from three infants. Analysis by the fluorescent *in situ* hybridization (FISH) method revealed no significant differences between the LGG and control groups in the counts and colonization frequency of total lactobacilli together with enterococci as well as in the prevalence and counts of bifidobacteria and clostridia. (Vendt *et al.*, 2006).

The authors stated that "[t]he administration of LGG-enriched formula increased colonization frequency with lactobacilli in general. ... LGG, although present in 75% of the samples in the LGG group, did not generally dominate the lactobacilli flora." Two infants in each test group were breast fed, which was thought to have no influence on the results. The authors theorized that the three infants in the control group found to have isolates similar to LGG "possibly ... obtained the bacteria during family contacts or a similar strain may otherwise occur in their autochthonous microflora." The authors also observed that, in the overall study population, the LGG group had a slightly greater defecation frequency and number of stools, but these were within the range of normal stool consistency. The

authors concluded "The infants in the LGG group were growing normally show[ ]ing even a better growth than placebo group." (Vendt *et al.*, 2006).

Millar *et al.* (1993) evaluated the ability of LGG to colonize the immature bowel of premature infants; the effect of LGG colonization on the intestinal reservoir of nosocomial pathogens such as enterobacteriaceae, enterococci, yeasts, or staphylococci; and the effect of LGG colonization on clinical progress and outcome. Twenty preterm infants with a gestational age of 33 weeks or less were studied from the initiation of milk feeds – consisting of expressed breast milk, formula, or preterm formula – until discharge from the neonatal unit. Starting with the initial milk feed, infants received either milk feeding alone or with LGG supplementation at a dose of 10^8 cfu twice per day for 14 days. Some infants also received antibiotic treatment, which included cefotaxime or flucloxacillin and netilimicin. Fecal samples were collected daily until discharge and were analyzed for viable LGG cells. The following clinical details were recorded daily: general well being, any signs of abdominal distension, vomiting or regurgitation, feed intolerance, the incidence of perineal rash, the frequency and consistency of stools, the number of suppositories used, and fluid/formula intake. Other clinical variables evaluated included weight gain, energy intake, evidence of sepsis, antibiotic use or other concomitant medication, oxygen and ventilatory requirements, and the duration of hospital stay.

"There were no significant differences between the two group for any of the clinical parameters recorded." No adverse effects related to LGG were reported.

The authors concluded that "[o]rally administered *Lactobacillus GG* was well tolerated and did colonise the bowel of premature infants." "There were no episodes of infection attributable to *Lactobacillus GG* in the small number of included in this study." Overall, LGG was found in the feces of nine of the 10 treated infants and one of the infants in the control group. Although concentrations declined over time, four of the seven infants for whom fecal sample were available three weeks after LGG administration ended still exhibited LGG in the feces. (Millar *et al.*, 1993).

In an attempt to reduce the fecal colonization of *Klebsiella oxytoca* following the deaths of two preterm infants in the neonatal intensive care unit (NICU) from necrotizing enterocolitis (NEC) caused by this organism, Grönlund *et al.* (1997) fed all neonates in and entering the NICU (overall number unknown) a dose of 2.5 x 10^8 cfu of LGG twice daily for two weeks or until discharge from the hospital. The mean duration of LGG supplementation was 7.8 days. Fecal samples were taken both before and after LGG supplementation, and the NICU colonization rate of *K. oxytoca* was assessed at one, two and a half, six, and seven months after the supplementation.

No safety-related endpoints were discussed by the authors, and no specific adverse effects were reported. The feces of 28 of 30 infants already in the NICU and all infants entering the NICU tested negative for *K. oxytoca* prior to LGG supplementation. LGG was detected in 82 percent of the fecal samples taken after supplementation. The authors observed: "No new clinical infections caused by *K. oxytoca* were found after the two cases," and there were no reports of any infections

caused by LGG. "No evident decrease of the colonization rate of *K. oxytoca* of the treated infants could be observed after *Lactobacillus* GG supplementation." (Grönlund *et al.*, 1997).

Marini *et al.* (1997) studied the intestinal colonization of LGG in preterm neonates by evaluating the microbial composition of their stools. Ten infants in the test group were fed an oral dose of 10^9 cfu of LGG for 15 days beginning on the first day of life; the control group consisted of five infants of similar gestational ages and weights. Stool samples for the test group were collected on days 0, 2, 5, 10, and 15 of life.

No safety-related endpoints were discussed by the authors, and no specific adverse effects were reported. Fecal LGG was found in all treated infants, with a peak level of cfu per gram of feces found, on average, after five days of LGG administration. The fecal count of LGG exhibited a progressive decline over the remaining 10 days of administration, with mean reductions of 31.4 and 94.6 percent on treatment days 10 and 15, respectively. Significant decreases in the ratio of aerobic to anaerobic microorganisms in the feces of treated infants relative to controls also were observed over the administration period.

The authors concluded:

> I) The administration of *Lactobacillus* GG induces a quick intestinal colonization in the preterm neonates. However, the permanence of *Lactobacillus* GG in the intestinal crop is transient in spite of the continuation of the treatments.

> II) The decrease of the levels of *Lactobacillus* GG in the gut is accompanied by the appearance and progressive increase of intestinal specific immunoglobulins (IgM, sIgA).
>
> III) An amelioration and a regulatory effect on the microbial intestinal component (decrease of the aerobic and gram-negative bacteria, reduction of the mycetic charge) were also observed.
>
> IV) Comparing the effects of repeated administrations of *Sacch. boulardil*, *B. subtilis*, spores and *Lactobacillus* GG onto preterm neonates, no significant difference were observed. (Marini *et al.*, 1997).

Agarwal *et al.* (2003) studied the ability of LGG to colonize the gut of low birth-weight, preterm neonates and modify the microbial ecology. Seventy-one infants weighing less than 2000 grams at birth received expressed breast milk supplemented with 10^9 cfu of LGG twice daily for either an average of 21 days (birth weight less than 1500 grams) or eight days (birth weight 1500 – 1999 grams) or served as controls. The less than 1500 gram test group consisted of 24 infants (with 15 controls), while of the 1500 – 1999 gram test group consisted of 23 infants (with 9 controls). To assess aerobic and anaerobic cultures, stools were collected before treatment and on treatment day seven or eight and, for infants less than 1500 grams, days 14 and 21. "Data on maternal and neonatal variables including any adverse events related to LGG administration were collected."

The authors stated: "No side effects were observed in babies either fed with or colonized by LGG," and "LGG was well tolerated in all infants." LGG was found in the feces of five of the 24 infants (21%) who weighed less than 1500 grams

and 11 of the 23 infants (47%) who weighed 1500 – 1999 grams. No LGG was found in the feces of the 24 controls. "Colonization was limited to infants who were not on antibiotics within 7 days of treatment with LGG." Also, an increase in microbial species, primarily gram-positive bacteria and anaerobes, was found in treated infants weighing less than 1500 grams, while no significant changes in species number or quantitative counts were found in the 1500 – 1999 gram treatment group. No difference in species number was noted in controls. The authors concluded that [a]lthough LGG is a relatively poor colonizer in infants, especially those infants weighing less than 1500 g at birth, it does appear to affect neonatal intestinal colonization patterns." (Agarwal *et al.*, 2003).

In all of these colonization studies in healthy term and preterm infants, no evidence of any adverse effects was reported. Changes in the composition of resident intestinal microbiota associated with daily administration of LGG were negligible or nonexistent. These studies show that LGG is capable of surviving, to various degrees, intestinal transit in both term and preterm infants. In term infants, the oral administration of LGG in amounts ranging from 10^8 to 10^{10} cfu per day for up to six months resulted in good rates of LGG colonization, as determined by presence of LGG in fecal samples. In the studies of shorter duration where it was studied, the incidence of LGG colonization, as measured by fecal recovery, typically decreased to 50 percent or less by two to three weeks after LGG administration was discontinued. Similar results were observed in preterm infants.

b) Impact on Intestinal Bacteria

In several studies described previously, ingestion of relatively high levels of LGG from birth was demonstrated not to significantly alter or impair the establishment of a normal fecal bacterial biota in term or preterm infants.

Sepp *et al.* (1993) fed newborn, full-term infants a daily dose of 5×10^{10} - 5×10^{11} cfu of LGG per gram over the first two weeks of life. 5/ No safety-related endpoints were discussed by the authors, and no specific adverse effects were reported. The fecal concentrations of lactobacilli in the group administered LGG was consistently greater than that of the controls. The predominance pattern of the intestinal microbiota in the test group did not change over the course of the month (*i.e.*, > 50% of the total microbes were similar in both study groups). The authors concluded: "The study shows that 2 wk administration of *Lactobacillus* GG, which starts right after birth, increases intestinal lactobacilli concentrations and does not impair the establishment of normal fecal microbiota."

In the Vendt *et al.* (2006) study previously described, healthy infants were fed, on average, approximately 10^9 of LGG daily for up to six months, and a cohort of 25 of the overall study population was selected randomly for fecal microbial analysis (*i.e.*, taken at enrollment in the study and at age six months). The authors stated that "[t]he LGG-enriched formula was well-tolerated ...." No other safety-related endpoints were discussed by the authors, and no specific

---

5/ The dosing units are not clearly defined in the publication: "*Lactobacillus* GG was administered as a freeze-dried powder diluted in about 5 ml of water, as a dose of 10^{10} - 10^{11} cfu/g ...."

adverse effects were reported. Based on the results of the study cohort, the authors concluded that "[t]he administration of LGG-enriched formula increased colonization frequency with lactobacilli in general. ... LGG, although present in 75% of the samples in the LGG group, did not generally dominate the lactobacilli flora."

Agarwal *et al.* (2003) fed preterm, low birth-weight neonates 10^9 cfu of LGG twice daily for either an average of 21 days (birth weight less than 1500 grams) or eight days (birth weight 1500 – 1999 grams). "No side effects were observed in babies either fed with or colonized by LGG," and "LGG was well tolerated in all infants." Relative to controls, an increase was observed in gram-positive and anaerobic microbial species in the stools of treated infants weighing less than 1500 grams, while no significant changes were found in the 1500 – 1999 gram treatment group. The authors found LGG to be well tolerated in all infants.

c) Effects on Common Pediatric Infections

A number of studies have been conducted to evaluate the effects of LGG administration on infections in infants and children. As described above, Millar *et al.* (1993) evaluated the ability of LGG to colonize the immature bowel of premature infants; the effect of LGG colonization on the intestinal reservoir of nosocomial pathogens such as enterobacteriaceae, enterococci, yeasts, or staphylococci; and the effect of LGG colonization on clinical progress and outcome. Starting with the initial milk feed, infants received either milk feeding alone or with LGG supplementation at a dose of 10^8 cfu twice per day for 14 days. Some infants also received antibiotic treatment, which included cefotaxime or

flucloxacillin and netilimicin. No significant differences were observed between treatment and control groups in either the numbers of nosocomial pathogens and anaerobes in the feces or the clinical parameters recorded (*i.e.*, general well being, signs of abdominal distension, vomiting or regurgitation, feed intolerance, the incidence of perineal rash, the frequency and consistency of stools, the number of suppositories used, weight gain, and formula intake). "There were no episodes of infection attributable to *Lactobacillus* GG in the small number included in the study," and no other adverse effects related to LGG were reported.

Also, as previously described, in an attempt to reduce the fecal colonization of *Klebsiella oxytoca*, Gronlund *et. al.* (1997), fed all neonates in and entering the NICU a dose of 2.5×10^8 cfu of LGG twice daily for two weeks or until discharge from the hospital (mean duration of treatment was 7.8 days). Fecal samples were taken both before and after LGG supplementation, and the NICU colonization rate of *K. oxytoca* was assessed at one, two and a half, six, and seven months after the supplementation. "No new clinical infections caused by *K. oxytoca* were found after the two cases," and there were no reports of any infections caused by LGG. No safety-related endpoints were discussed by the authors, and no specific adverse effects were reported. No evident decrease of the colonization rate of *K. oxytoca* of the treated infants could be observed after *Lactobacillus* GG supplementation."

Biadaioli *et al.* (1998) performed a double-blind, placebo-controlled, multi-center center on premature infants in neonatal intensive care units (NICUs)

to determine whether the daily administration of LGG reduces the enteric infections found to afflict those neonates receiving antibiotic treatment. The selection criteria for study participation required that infants be less than 33 weeks of gestational age and/or weigh less than 1500 grams, and a total of 224 infants were enrolled in the study (119 in the treatment group, 105 controls). Treated subjects received 10^9 cfu of LGG per day (versus placebo) in the food supply from the date of NICU admittance to discharge, with the average treatment period lasting 49.7 days.

The authors stated that "...there were no negative clinical effects of a relevant nature to be reported." "No statistically appreciable difference was found against the overall number of infections (ascertained or suspected) between the group that received the placebo (15.2%) and the group that received the *Lactobacillus* GG infants (18.4%)." The authors concluded:

> To date our work has been unable to show a significant difference in the overall incidence of infection between the study and control group. In any event, 92.3% (12/13) of infections etiologically ascertained in the placebo group is determined by germs of intestinal origin compared to 66.6% in the treated group although only eight of 12 infections etiologically ascertained in the treatment group (8/12). (Biadaioli *et al.*, 1998).

In a similar study, Dani *et al.* (2002) conducted a randomized, double-blind, placebo-controlled, multi-center evaluation of preterm infants in NICUs to assess the effect of LGG administration on the incidence of urinary tract infections (UTIs), bacterial sepsis, and NEC. The selection criteria for study participation required that infants be less than 33 weeks of gestational age and/or weigh less

than 1500 grams, and a total of 585 infants were enrolled in the study (295 in the treatment group, 290 controls). The majority of subjects in both the treatment and control groups received at least one course of parenteral antibiotics (unspecified) during the study. Treated subjects received 6 x 10^9 cfu of LGG per day (versus placebo) in standard milk feed initiated at the discretion of the physician and continued until discharge from the NICU, with the average treatment period lasting 47.3 days.

No safety-related endpoints were discussed by the authors, and no specific adverse effects were reported. The incidences of urinary tract infections and NEC were less than that of controls, and there were no statistically significant differences in the incidences of bacterial sepsis, which were caused by coagulase-negative staphylococci or enterobacteriaceae. (Dani *et al.*, 2002).

In contrast to the studies on neonates reported above, Hatakka *et al.* (2001) examined whether the long term consumption of LGG in cow's milk affected the gastrointestinal and respiratory infections in children in day care centers. In a randomized, double-blind, placebo-controlled, multi-center study, 571 children of ages 1-6 years received milk either with (282 subjects) or without (289) LGG supplementation. Supplemented milk contained 5-10 x 10^5 cfu of LGG per milliliter, and the average daily milk consumption (5 days/week) was 260 milliliters for both the treatment and control groups over the course of the 18 month study. During the study, parents recorded daily any respiratory symptoms (*e.g.*, fever, runny nose, sore throat, cough, chest wheezes, earache) and gastrointestinal symptoms (*e.g.*,

diarrhea, vomiting, stomach ache), as well as absences from day care centers because of illness. Fecal samples were collected at the beginning, middle, and end of the study to measure LGG recovery and assess compliance. An eight-month follow up period was included, as well, although 58 children did not complete this phase of the study.

No differences in adverse events – listed as of stool frequency or consistency, abdominal pain, allergic symptoms, or side effects – between the LGG treatment group and the controls were reported. It was found that children in the LGG treatment group had a 16 percent reduction in days of absence from the day care centers (4.9 versus 5.8 days for controls), which was age-adjusted to yield an 11 percent reduction (5.1 versus 5.7 days for controls). The treatment group also had a 17 percent relative reduction in children suffering from doctor-diagnosed respiratory tract infections with complications and lower respiratory tract infections and a 19 percent relative reduction in antibiotic treatments for respiratory infection. LGG was recovered in the feces of 97 percent of the treated subjects (versus 9 percent of controls) by the end of the study period. The authors concluded: "*Lactobacillus* GG may reduce respiratory infections and their severity among children in day care. The effects of the *Lactobacillus* GG were modest but consistently in the same direction." (Hatakka *et al.*, 2001).

In all of these studies focusing on the effects of LGG on common pediatric infections, no adverse effects related to the administration of LGG were reported.

d) Effects on Antibiotic-Associated Diarrhea

Several studies have evaluated the ability of LGG to reduce or prevent the incidence of diarrhea and other gastrointestinal effects that are commonly associated with antibiotic treatment in both children and adults.

In a randomized, placebo-controlled, double-blind study, Arvola *et al.* (1999) evaluated the effects of LGG on the incidence of diarrhea in infants and children following seven to 10 days of antibiotic treatment (consisting of amoxicillin, penicillin, kephalosporins, erythromycin, or trimetoprim-sulpha) for acute respiratory infections. The 119 test subjects were from two weeks to 12 years old (mean age of 4.5 years), had not received antibiotics over the three months prior to the study, did not suffer from gastrointestinal disorders, and did not need intravenous antibiotic treatment. Subjects received either placebo or 2×10^{10} cfu of LGG in capsules twice daily during antibiotic treatment. Parents of the subjects kept a daily symptoms diary and recorded stool frequency and consistency at home for three months. The primary outcome measure was diarrhea during the first two weeks after antibiotic treatment was initiated.

"The parents reported no adverse effects of *Lactobacillus* GG or placebo." In the two week period following the initiation of antiobiotics, the incidence of diarrhea in the subjects administered LGG was five percent compared to 16 percent in controls; the severity of the diarrhea was comparable. The age of the subjects with diarrhea was between three months and five years in 75 percent of cases in both groups. The authors concluded that "...*Lactobacillus* GG is effective

in the prevention of diarrhea in children receiving antimicrobial treatment to respiratory infections." (Arvola *et al.*, 1999).

Vanderhoof *et al.* (1999) performed a randomized, placebo-controlled, double-blind study to assess the efficacy of LGG in reducing the incidence of antibiotic-associated diarrhea in children with acute infections of the respiratory tract, urinary tract, soft tissues, or skin. A total of 202 subjects, of ages six months to 10 years, received capsules containing 10^9 or 2×10^9 cfu of LGG per day (based on weight) while on a 10-day course of oral antibiotics (consisting of amoxicillin, amoxicillin/clavulanate potassium, cefprozil, clarithomycin, or other antibiotics). The median age of the 188 subjects completing all phases of the protocol was four years. The primary caregivers were questioned by investigators every three days regarding the incidence of gastrointestinal symptoms, including stool frequency and consistency, presence/absence of visible blood in the stool, abdominal pain, nausea, vomiting, bloating, and appetite suppression.

Fourteen children failed to complete the study primarily due to antibiotic noncompliance or inability of the investigators to contact the primary caregiver at the assigned follow-up times. The authors noted that "[t]here were no failures [to complete the study] resulting from untoward effects of either LGG or placebo." The incidence of diarrhea was found to be significantly less in those subjects administered LGG (8%) compared to control subjects (26%), and the mean duration of the diarrhea incidences was reduced, as well (4.7 days for LGG-treated versus 5.9 days for controls). "No differences were seen between the active and

placebo groups in any of the other parameters assessed," and no adverse effects related to LGG consumption were noted by the authors. The authors concluded: "*Lactobacillus GG* reduces the incidence of antibiotic-associated diarrhea in children treated with oral antibiotics for common childhood infections." (Vanderhoof *et al.*, 1999).

In contrast to studies in the pediatric population, described above, Siitonen *et al.* (1990) studied the efficacy of LGG-supplemented yogurt in preventing erythromycin-associated diarrhea in healthy adult males. Sixteen subjects were administration 400 mg of erythromycin three times a day for seven days and consumed 125 mL of either LGG fermented yogurt or pasteurized regular yogurt (control group) 30 minutes after the morning and evening doses of antibiotic. Subjective symptoms were recorded by all subjects daily, and stool samples were taken on the first and last day of treatment.

Subjects receiving the LGG supplementation experienced significantly less diarrhea and other side effects of erythromycin treatment, including abdominal distress, stomach pain, and flatulence, than the control subjects. Although the count of total fecal lactobacilli was found not to be significantly altered during the erythromycin treatment for either the treated or control groups, LGG colonies were found in the feces of the LGG-treated subjects, while none was found in the feces of the controls. The authors concluded: "This study suggests that *Lactobacillus* GG yoghurt may have the potential for preventing erythromycin associated gastrointestinal side effects, especially diarrhoea. *Lactobacillus* GG is also able to

colonize the intestinal tract despite antibiotic treatment, and it may thereby help to restore the normal intestinal microflora during and after erythromycin therapy." (Siitonen *et al.*, 1990).

e) Impact on Host Nutrition

Due to the fact that probiotic strains are typically found as part of the normal intestinal biota, probiotic bacteria are not expected to have adverse effects on nutrient availability, host absorption and metabolism, or growth. Accordingly, there have been relatively few studies on the impact of probiotic strains on host nutrition. Carbohydrates are a primary source of energy for probiotic strains. The majority of dietary sugars are absorbed in the proximal gut before reaching the lower gut where probiotic bacteria reside. Thus, probiotic lactobacilli are unlikely to have a significant effect on the levels of dietary carbohydrates available for use as energy by the host.

Moreover, the food sources utilized by probiotic bacteria are predominantly those components of the diet that have passed through the small intestine undigested, primarily carbohydrates. Carbohydrates that reach the colon include non-starch polysaccharides (*i.e.*, plant cell wall polysaccharides that are resistant to digestion by enzymes present in the upper gastrointestinal tract), resistant starch polysaccharides, and simple carbohydrates that passed through the small bowel undigested. (Rombeau and Kripke, 1990). Consumption of a typical western diet would result in approximately 20 grams of carbohydrate per day reaching the colon and could be higher if the dietary fiber intakes are high.

(Cummings, 1983). The primary metabolic end products produced by probiotic lactobacilli (*e.g.*, lactic acid, acetic acid, ethanol, formic acid, and acetaldehyde) do not represent safety concerns in the quantities typically found in fermented foods or generated in the gastrointestinal tract. (Stansbridge *et al.*, 1993). These metabolites are either absorbed, metabolized and excreted, or simply excreted. Additionally, the long history of lactobacilli use without any adverse health effects is the best proof of their safety.

In addition, LGG and other probiotic bacteria are known to produce certain nutritionally important substances such as short-chain fatty acids (SCFA). (Cummings, 1983; Rombeau and Kripke, 1990). Nevertheless, based on the intake of probiotic relative to indigenous bacteria, the probiotic strain would be expected to have negligible effects on total SCFA production compared to the pattern and amount of SCFA produced by the indigenous biota. The available studies that have evaluated the effect of LGG on host nutrition are described below.

As mentioned previously with regard to colonization and impact on intestinal bacteria, Vendt *et al.* (2006) evaluated the influence of LGG-enriched formula on the growth and fecal biota of healthy Estonian infants up to six months of age in a randomized, double-blind, placebo-controlled study. No adverse events were reported, and the investigators concluded: "The results of this randomized, controlled trial suggest that LGG-enriched formula was safe and well tolerated and resulted in normal growth."

In a study on the same preterm infant population as Millar *et al.* (1993), described above, Stansbridge *et al.* (1993) studied the effects of feeding LGG on gut fermentation of carbohydrates. Starting with the first milk feeds (days 1 to 3 of life), 20 preterm infants with a gestational age of 33 weeks or less received either milk feeding alone – consisting of breast milk, standard formula, or low-birth weight formula milk, or a combination of these – or milk feeding with LGG supplementation at a dose of 10^8 cfu twice per day for 14 days. Some infants also received antibiotic treatment, which consisted of cefotaxime, flucloxacillin with netilmicin, erythromycin, or multiple antibiotics. Fecal samples were collected daily until up to 35 days from the start of oral feeds, and quantitative microbiology was performed on or within 48 hours of samples obtained on days 1, 7, 14, 21, 28, and 35 after the initial feedings. Fecal samples from these or adjacent days were collected for biochemical analysis of SCFA, ethanol, and urinary 2,3-butanediol.

"Clinically, there were no adverse effects, but no obvious benefits either." "Colonization with *Lactobacillus GG* had little impact on faecal SCFAs and, it may be assumed, enteric production of these nutritionally important compounds. Weight gain was similar for *Lactobacillus GG* colonized babies and controls, although SCFA production would be only one of several factors contributing to this observation." For both infants treated with LGG and controls, data were pooled for those infants receiving either no antibiotics or cefotaxime only, respectively, while data from infants receiving erythromycin or multiple antibiotics were excluded because these antibiotic regimens were associated with decreased counts of fecal

bacteria. Fecal SCFA from treated infants did not differ significantly from controls from days 1-28. Ethanol excretion was increased in the treated infants in both proportion of samples (34 of 52 (65%) from infants fed LGG versus 31 of 83 (37%) from infants not fed LGG) and concentration in positive samples (median (range) for LGG-fed infants: 6.3 μmol/g (trace – 40 μmol/g) and for non-LGG-fed infants: 3.3 μmol/g (0.6 – 0.8; one 229 μmol/g). The small increase in ethanol secretion is unlikely to have clinical significance." (Stansbridge *et al.*, 1993).

Elmadfa *et al.* (2001) studied the effect of a commercially available yogurt containing *Streptococcus thermophilus*, *Lactobacillus acidophilus*, and LGG on the status of vitamins B_1, B_2, or B_6 status in healthy adults. Twelve subjects, all of whom were not taking medications or dietary supplements, consumed 500 grams of yogurt daily for four weeks. A control group was not used. The yogurt contained 5×10^7 cfu of LGG per gram for an intake of 2.5×10^{10} cfu of LGG per day. During the first two weeks, the yogurt cultures were thermally inactivated to assess the influence of the B-vitamins in yogurt on the subjects overall B-vitamin status. Blood was obtained from each subject on study days 1, 15, and 29; urine and feces were collected daily.

No safety-related endpoints were discussed by the authors, and no specific adverse effects were reported. Vitamin B_1 levels in plasma decreased significantly and progressively over the course of the study, and a slight but significant decrease of this vitamin was found in the urine, as well. These changes were attributed to a 25 percent reduction of bioavailable vitamin B_1 in the diet of

the test subjects. The levels of the B_2 and B_6 vitamins in plasma and urine differed slightly throughout the study, with most of them decreasing, but all were considered to be within normal ranges. The authors concluded: "Our observations show that the bacterial flora of the examined yoghurt does not influence the vitamin B_1, B_2 and B_6 status of man." "Moreover, in our study we observed that *L. casei* or a compound probiotic yoghurt seem to reduce the bioavailability of vitamins B_1, B_2 and B_6." (Elmadfa *et al.*, 2001).

2. Studies in Compromised Subjects

A number of probiotic strains, including LGG, have been shown to be well tolerated and without adverse effects in healthy infants; however, the risk of adverse events could be higher in neonatal patients that are immune deficient or have impaired intestinal barrier function. LGG has been evaluated in a number of studies involving preterm infants or term infants with acute diarrhea or allergies to various dietary substances. The safety and tolerance of LGG in these study subjects is relevant because such conditions may be associated with compromised immune function, mucosal barrier function, or both. In total, these studies, summarized in Table 2, show that the oral administration of LGG at levels exceeding 10^{11} cfu/day appears to be well tolerated, and adverse effects have not been reported in neonates, infants, and children that are immune deficient or have impaired intestinal barrier function due to many forms of acute diarrhea or allergies to various dietary substances.

a) Studies in Neonates

Premature infants are highly susceptible to infections due to the immature nature of their immune system and gastrointestinal tract. As described previously, in clinical research studies conducted by Biadaioli *et al.* (1998), Dani *et al.* (2002), Grönlund *et al.* (1997), and Millar *et al.* (1993), investigators fed LGG to premature infants in an attempt to reduce the incidence of various types of serious infections. LGG was well tolerated and no adverse events were reported on any safety-related endpoints or such outcomes as incidence of urinary tract infections, sepsis, NEC, and growth progression. Similarly, as described above, studies on gut colonization or the impact on host nutrition in preterm neonates by Agarwal *et al.* (2003), Marini *et al.* (1997), and Stansbridge *et al.* (1993) demonstrated that LGG is well tolerated, and no adverse effects in this vulnerable population were reported.

b) Studies in Term Infants and Children

(1) Effects on Recovery from Acute Diarrhea

Term infants and young children were fed LGG in an attempt to enhance recovery from acute diarrhea. Infants in these studies could be considered to have a compromised mucosal barrier function due to the effects of acute infections (*e.g.* rotavirus). A description of these studies follows.

Kaila *et al.* (1992) studied the effect of LGG on the clinical recovery of well-nourished children suffering from acute rotavirus diarrhea of less than seven days duration. Thirty-nine children of ages 7 – 37 months (mean age of 16 months) received 125 grams of either pasteurized yogurt containing less than 10^3 of LAB (17

controls) or a fermented milk product containing 10^{10-11} cfu of LGG (22 test subjects) twice daily for five days. The subjects were weighed daily, stool quality was described throughout the study and follow-up period, and blood was drawn both one day and three weeks after admission for immunological assessment.

No safety-related endpoints were discussed by the authors, and no specific adverse effects were reported. In the test group, the duration of diarrhea was significantly reduced compared to controls, and no recurrences of diarrhea occurred during the three-week follow-up period. Based on the IgG, IgA, and IgM Ig-secreting cell numbers, test subjects had a significantly enhanced non-specific humoral response during the acute phase of the infection relative to controls, and at convalescence, 90 percent of the test group versus 46 percent of the control group had developed an IgA-specific antibody-secreting cell response to rotavirus. The authors concluded: "The results indicate that *Lactobacillus* GG promotes recovery from rotavirus diarrhea via augmentation of the local immune defense. Furthermore, specific IgA response to rotavirus is endorsed, which is possibly relevant in protection against reinfections." (Kaila *et al.*, 1992).

In a randomized, placebo-controlled study, Isolauri *et al.* (1994) administered a dose of 10^{10} cfu of LGG in a freeze-dried powder twice daily for five days to 21 well-nourished children who suffered from acute diarrhea (*i.e.*, less than seven days of symptoms prior to enrollment), had more than three watery stools during the previous 24 hours, and were diagnosed to have rotavirus-caused acute gastroenteritis. Counting the 21 control subjects, a total of 42 children, all of ages

five to 28 months (mean age of 13.6 months for test group and 14.4 months for controls), participated in the study. The subjects were weighed and had the consistency of their stools described daily, and bacterial enzyme activities in the feces were assessed within six hours of admission, 30 – 36 hours after admission, and 21 – 24 days after admission to the study.

No safety-related endpoints were discussed by the authors, and no specific adverse effects were reported. "Recovery was uneventful in all cases." No LGG was found in the feces of any study participant upon admission. At a detection limit of 10^3 cfu, LGG was found in the feces of 15 of 18 subjects from the study group 30 – 36 hours after the start of LGG administration, but it was not detected in any samples from the control group. The reduction in the duration of diarrhea was reduced to a statistically significant extent in the test group (mean 1.5 days) relative to controls (mean 2.3 days). Urease activity during diarrhea transiently increased in the control group but not in the test group, while no inter-group differences were found in fecal levels of ß-glucuronidase, ß- glucosidase, and glycocholic acid hydrolase. Based on these results, the investigators theorized "... that rotavirus infection gives rise to biphasic diarrhea, the first phase being osmotic diarrhea and the second associated with overgrowth of specifically urease-producing bacteria. Oral bacteriotherapy appears a promising means to counteract the disturbed microbial balance." (Isolauri *et al.*, 1994).

Raza *et al.* (1995) studied the effect of LGG on the course of acute, non-bloody diarrhea in a triple-blind, placebo-controlled clinical trial in hospitalized,

undernourished children in Pakistan. Forty children of ages one to 24 months (mean age of 13 months) who were admitted with acute diarrhea and at least moderate dehydration participated in the study; children with severe malnutrition or suspected septicemia were excluded. The treatment group of 21 subjects received 10^{10-11} cfu of LGG mixed in 10 mL of oral rehydration solution twice daily for two days while the control group of 19 subjects received placebo in the same manner. Subjects were discharged from the hospital after 48 hours. Frequency of vomiting and diarrhea, character of the stool, and treatment prior to admission (*i.e.*, antibiotics or antidiarrheal medication) were recorded, while stool samples were taken at admission and discharge from the hospital. The duration of diarrheal episodes was not recorded and no follow-up was undertaken.

No safety-related endpoints were discussed by the authors, and no specific adverse effects were reported. Aside from less frequent vomiting, there were no significant differences in the clinical indices measured between the test and control groups. The authors state that LGG "...treatment was well tolerated." The use of antibiotics prior to admission was significantly higher in LGG-treated subjects (19 of 21) than controls (8 of 19), although the details of this usage are not known. Rotavirus was found in 22 percent of subjects' stools. The authors reported: "In those who had presented with acute nonbloody diarrhea (n = 32), the percentage of children with persistent watery diarrhea at 48 hours was significantly less in the *Lactobacillus* group: 31% vs. 75% ($P<0.01$). No significant difference was observed by 48 hours in those presenting with bloody diarrhea." (Raza *et al.*, 1995).

In a randomized, double-blind study, Majamaa *et al.* (1995) evaluated the effect of several LAB, including LGG, on the immune response to rotavirus in children with acute rotavirus gastroenteritis. Forty-nine children of ages 6 to 35 months who were admitted to the hospital for acute gastroenteritis of less than seven days duration completed the study; exclusion criteria included rotavirus-negative status, rotavirus-positive patients who had three or more watery stools in the 24 hours prior to admission, and totally breast fed infants. The subjects received either 6.25 x 10^9 cfu of LGG (16 subjects), 2.75 x 10^8 cfu of *Lactobacillus casei* ssp. *rhamnosus* (Lactophilus) (14 subjects), or a 3.5 x 10^9 cfu of a combination of (95%) *Streptococcus thermophilus*, (4%) *Lactobacillus delbrückii* subsp. *bulgaricus*, and (1%) *L. casei* subsp. *rhamnosus* (Yalacta) (19 subjects) mixed with 5 mL of water and given with food or via nasogastric tube twice daily for five days. Five subjects not receiving any lactobacilli were studied, as well. A stool sample was taken on the first day after admission, the number and quality of stools and the number of vomiting episodes were monitored during the hospital stay, incidence of recurring diarrhea was noted through the follow-up period, and blood samples were taken to assess rotavirus antibodies on the day of admission and during a medical examination three weeks later.

No safety-related endpoints were discussed by the authors, and no specific adverse effects were reported. Those subjects who received LGG had a statistically significant shorter duration of diarrhea (1.8 days) than those receiving either Lactophilus (2.8 days), Yalacta (2.6 days) or no lactobacilli preparation at all

(2.6 days). The total number of immunoglobulin-secreting cells was comparable in the three treated groups, as were the levels of IgM and IgG rotavirus-specific antibody secreting cells. Relative to the other treated groups, the LGG-treated group had enhanced IgA-specific antibody secreting cells to rotavirus and serum IgA antibody levels during the convalescent stage. The authors stated that "[t]he results of our study confirm previous findings that LGG promotes clinical recovery from acute gastroenteritis and potentiates gut immune response to rotavirus." (Majamaa *et al.*, 1995).

As follow-up to their earlier research, Kaila *et al.* (1995) assessed the effect of viable or heat inactivated LGG on the immune response to acute rotavirus diarrhea in children in a randomized, double-blind study. Forty-one well-nourished subjects of ages one to 38 months (mean age of 13 months) who experienced acute gastroenteritis of less than seven days' duration received either 10^{10-11} cfu of viable (20 subjects) or heat inactivated LGG (21 subjects) in approximately 5 mL of water twice daily for five days. The subjects were weighed daily, stool quality was described throughout the study and follow-up period, and blood was drawn both one day and one month after admission for immunological assessment. Thirteen subjects in each group participated in all phases of the study.

No safety-related endpoints were discussed by the authors, and no specific adverse effects were reported. "In the study, clinical recovery from rotavirus diarrhea was equal in the two groups receiving viable or heat inactivated *L. casei* strain GG during the diarrhoea." Those subjects receiving LGG treatment

weighed an average of 120 grams more upon discharge (an unspecified time period that depended on the discretion of the attending pediatrician) relative to admission, while subjects in the control group weighed an average of 320 g more upon discharge relative to admission (p=0.51). Furthermore, "... viable *L. casei* strain GG enhanced the rotavirus specific IgA secreting cell response and the serum IgA antibody response to rotavirus." "The results indicate that viable *L. casei* strain GG stimulate rotavirus specific IgA antibody responses, theoretically significant in the prevention of reinfections." (Kaila *et al.*, 1995).

Shornikova *et al.* (1997) investigated the effects of oral rehydration and LGG on recovery from acute diarrhea in a randomized, double-blinded, placebo-controlled study in the Karelian Republic of Russia. Upon hospital admission, a total of 123 infants of ages 1-36 months were administered one of two ORS (differing in osmolarity and sodium concentration) or intravenous rehydration therapy after experiencing acute diarrhea of less than five days' duration with one or more watery stools during the previous 24 hours. LGG (5 x 10^9 cfu per dose) or a cellulose powder placebo was administered twice daily in ORS or food starting with the first rehydration and continuing for five days. "The normal, full diet for age was started after the first rehyration," but yogurt, fermented milk and sour cream was excluded. Upon admission, the subjects were weighed, clinically examined, and the severity of dehydration (*i.e.*, fluid loss) was estimated from clinical signs or, when possible, calculated from acute weight loss. The number and quality of stools were followed by attending nurses, and the duration of diarrhea was determined to be the

last appearance of watery stools. Stool samples were cultured for *Salmonella* and *Shigella*, as well as tested for rotavirus antigen.

No safety-related endpoints were discussed by the authors, and no specific adverse effects were reported. "LGG was administered without difficulties...." Thirty-four subjects tested positive for rotavirus antigen, and 26 had a confirmed bacterial etiology, including 11 cases of *Salmonella enteritidis*, 13 cases of *Shigella sonnei*, and two cases of *Shigella flexneri*. Ninety-six subjects received ORS orally, 26 received intravenous fluids for rehydration, and one received neither. The subjects receiving intravenous fluids had a significantly longer mean duration of diarrhea relative to those subjects receiving ORS. Subjects receiving LGG had a significantly shorter mean duration of diarrhea (2.7 days) relative to controls (3.8 days). "The frequency of watery stools began to decrease significantly in the LGG group from the second treatment day, and the cumulative number of diarrhoeal stools was significantly smaller in the LGG group on days 2 and 3 after initiation of treatment." LGG was found to significant decrease the number of watery stools in rotavirus-positive subjects (n = 13) on days 0-5 of treatment relative to controls (n = 21), while no effect was observed between those subjects with confirmed bacterial diarrhea who received LGG (n = 11) versus placebo (n = 15). (Shornikova *et al.*, 1997).

Guarino *et al.* (1997) studied the effect of LGG on the duration of diarrhea in children of ages 3 to 36 months. One hundred subjects were enrolled in the study and were randomly assigned to the treatment (n = 52) or control (n = 48)

groups. Oral rehydration was administered alone (control) or in combination with twice daily feedings of 3 x 10^9 cfu of LGG suspended in 200 mL of milk or formula (treatment) for a maximum of five days. "Full, age-appropriate feeding was introduced soon after initial rehydration. Diarrhea was defined as three or more watery stools per day. Exclusion criteria were the administration of antibiotics in the pervious 3 weeks, the onset of diarrhea more than 48 hours before the visit, breast-feeding, and a weight:height ratio below the fifth percentile. Recovery from diarrhea was defined as the time since the last loose or liquid stools." The outcome of diarrhea was evaluated by the mothers of enrolled children who were provided instruction and communicated with daily. Stools were collected upon enrollment and six days after the onset of diarrhea and were analyzed by ELISA for rotavirus.

No safety-related endpoints were discussed by the authors, and no specific adverse effects were reported. The treatment and control groups were similar in sex, age, body weight, and duration of diarrhea prior to enrollment. Diarrheal duration was significantly reduced by approximately 50% in children receiving LGG compared with controls. The administration of LGG as an adjunct to rehydration also significantly reduced the duration of diarrhea relative to controls in both rotavirus-positive and rotavirus-negative subjects (the cause of diarrhea in these subjects was not determined. The number of subjects excreting rotavirus six days after onset of diarrhea was significantly reduced in the LGG group relative to the control group, as well. The authors concluded: "Oral administration of *Lactobacillus* GG is effective in rotavirus-positive and rotavirus-negative

ambulatory children with diarrhea. Furthermore, it reduces the duration of rotavirus excretion." (Guarino *et al.*, 1997).

Guandalini *et al.* (2000) studied the effect on acute diarrhea of LGG administered in the oral rehydration solution (ORS) in children of ages one to 36 months. Two hundred and ninety-four subjects (147 each in test and control groups) who were hospitalized with acute diarrhea of all causes participated in a randomized, double-blind, placebo-controlled, multi-center study. Exclusion criteria included previous use of probiotics, underlying chronic untreated small bowel disease, inflammatory bowel diseases, and any other underlying chronic disease or immune-suppressive condition or treatment. During the first four to six hours after admission to the study, the test subjects received oral rehydration solution in which at least 10^{10} cfu of LGG per 250 mL was dissolved, while controls received the solution with a placebo. Anthropometric measurements were taken at admission, weight at short intervals thereafter, and the number and characteristics of stools passed, fluid intake and occurrence of vomiting were monitored throughout the observation period. Stool samples were collected on admission and 48 hours thereafter and analyzed for microbial pathogens.

No safety-related endpoints were discussed by the authors, and no specific adverse effects were reported. Rotavirus was the most commonly detected pathogen in both the test and control groups (38% and 32%, respectively), 15 percent of subjects in both groups were affected by invasive enteritis (caused by *Salmonella*, *Campylobacter*, *Yersinia enterocolitica*, or *Shigella*), and 24 percent of

test subjects and 35 percent of controls had no identifiable pathogen in their stools. Consumption of ORS by the test group subjects averaged 382 mL in the first four hours after admission, 459 mL during the following 20 hours, and 1194 mL overall, with large variation; consumption by the control group subjects were similar. Overall, the duration of diarrhea was significantly reduced in the test group relative to controls (approximately 58 versus 72 hours, respectively), even in those subjects with no identifiable pathogen in their stools. Decreased duration of diarrhea was found in those subjects with rotavirus, while no decrease was observed in subjects with diarrhea caused by bacterial pathogens. The overall incidence of diarrhea lasting longer than seven days was significantly reduced in test subjects compared to controls (2.7% versus 10.7%, respectively) as were the length of hospital stays. The rehydration therapy failed due to excessive vomiting or refusal to take the rehydrating solution in approximately eight percent of both groups, resulting in subsequent intravenous rehydration. The difference in positive weight gain of the treatment and control groups over the first 24 hours of ORS administration was not statistically significant. (Guandalini *et al.*, 2000).

From these results, the investigators drew the following conclusions:

> 1. *Lactobacillus* GG can be safely administered in the ORS used in the initial rehydration of children with acute diarrhea of different origins.
>
> 2. This intervention results in a shorter duration of diarrhea. The effect is more evident in, but not limited to, rotavirus-positive patients.

> 3. Children who receive *Lactobacillus* GG have a markedly reduced chance of having diarrhea lasting more than a week than do their control counterparts.
>
> 4. Duration of hospital stay is 1 day less in patients receiving *Lactobacillus* GG in ORS. (Guandalini *et al.*, 2000).

Salazar-Lindo *et al.* (2004) studied the effect of LGG in a milk formula upon the duration and severity of acute diarrhea in infants in Peru who were suffering from potential etiologic agents other than rotavirus. Male infants 3-36 months of age were eligible for the study if they met the following criteria: (a) a history of three or more watery stools per day for less than 48 hours, (b) no bloody stools at the moment of first examination, (c) clinical signs of dehydration, (d) no clinical features of hypovolemic shock, (e) no clinical signs of a coexisting acute systemic illness or a recognized chronic disease, (f) no history of current antibiotic or antidiarrheal medication use, (g) not exclusive feeders, and (h) weight for age greater than 60% of the median established by the National Center for Health and Statistics. A total of 179 male infants were rehydrated with WHO's ORS and randomly assigned to receive a milk formula with (n = 90) or without (n = 89) 10^9 cfu of LGG per mL of formula. A clinical history, physical examination, and drawing of blood was completed before starting treatment, and blood was taken again after 24 hours of treatment.

Baseline characteristics (*i.e.*, age, nutritional status, and other clinical and laboratory variables) of the treatment and control groups were comparable upon admission, although the stool output in the treatment group was significantly

greater during the first four hours of the rehydration phase prior to admission. Stool volume was periodically measured using a device suited to collect stools separate from urine, and the duration of diarrhea was estimated based on the physical characteristics of the stools. The first dose of formula was administered as soon as rehydration was completed, and subsequent doses were provided every four hours until cessation of diarrhea or for a maximum of five days. Each subject was given 150 mL of formula per kilogram body weight per day to a maximum of 1000 mL per day; administration was not compulsive. Caloric requirements were completed with a blended soft baby food for subjects six months of age or older. "The dose of LGG in our study was 6-8 x 10^{11} cfu per day." (Salazar-Lindo *et al.*, 2004).

"No adverse effects due to the study formula were notice[d] in either group during the study." Eight subjects from the LGG group and 11 from the control group were prematurely withdrawn from the study because of bloody stools within the first 24 hours after admission (n = 11), parental non-compliance (n = 4), no diarrheal stools passed within the first 24 hours after admission (n = 2) typical severe cholera-like diarrheal disease improperly included (n = 1), or severe systemic infection present but not recognized at admission (n = 1). Total stool output was significantly larger in the LGG group relative to the control group, although no significant differences were found in duration of diarrhea, rate of treatment failure (defined as recurrence or continued presence of more than 5% dehydration, worsening electrolyte abnormalities, no weight gain, or development of ileus or

severe diarrhea), and proportion of subjects with unresolved diarrhea after 120 hours. The rate of stools with reducing substances after 24 hours of treatment increased significantly in both groups. (Salazar-Lindo *et al.*, 2004).

"About 12% of patients had an unresolved diarrhea and an additional 20% were classified as treatment failures, mostly due to severe diarrhea." The authors concluded: "this study did not show a positive effect of LGG on the clinical course of acute watery diarrhea. Positive beneficial effects of LGG, as had been reported elsewhere, could have been masked in our study by worsening diarrhea due to transient lactose malabsorption." "In more than 55 percent of subjects, an enteropathogen could be identified. This figure could be higher because studies for ETEC were not done. The most prevalent agents were rotavirus (30.7%), EPEC (11.7%), *Vibrio cholerae* (10.1%) and *Campylobacter sp.* (8.4%), with an important proportion of patients having mixed infections." "LGG appears to be more effective in viral than in bacterial diarrhea." (Salazar-Lindo *et al.*, 2004).

(2) Ability to Prevent Diarrhea

Several investigators studied the prophylactic ability of LGG in preventing the occurrence of diarrhea in compromised infants and children.

Oberhelman *et al.* (1999) conducted a randomized, double-blind, placebo-controlled study on 204 undernourished Peruvian infants of ages six to 24 months at initiation in which subjects received either 3.7×10^{10} cfu of LGG (99 subjects; mean age of 14.76 months) or placebo (105 subjects; mean age of 13.96

months) in flavored gelatin once daily six days a week for up to 15 months. Infants with second- or third-degree malnutrition were excluded. Stool specimens were collected at three, six, and 13 months after enrollment from the same subset of 40 subjects selected randomly from both groups to document LGG colonization and screen for LGG in controls. Outcome variables were analyzed for the entire study group and for subgroups stratified by breast milk intake and by age. Only subjects with at least one month of analyzable surveillance were included. The incidence of diarrhea was calculated by grouping, determining number of episodes, and total observation time within the group, rather than by averaging individual rates.

No safety-related endpoints were discussed by the authors, and no specific adverse effects were reported. Surveillance lasted for 15 months, over which 954 episodes of diarrhea were detected (490 in LGG group, 464 in placebo group), with etiological data available for 481 of this total. The primary focus of this study was the incidence of diarrhea per subject per year (as reported below) and not episodes of diarrhea in specific individuals. A bacterial or viral pathogen was identified in 58.2 percent of the episodes, including enterotoxigenic *E. coli* (96 cases, 19.9%), *Campylobacter jejuni* (33 cases, 6.8%), rotavirus (26 cases, 5.4%), and *Shigella* spp. (16 cases, 3.3%). Adenovirus was detected more frequently in diarrhea specimens from subjects in the placebo group (19 episodes) than the LGG-treated group (8 episodes), but no other differences in the distribution of any other pathogen was observed between groups. (Oberhelman *et al.*, 1999).

The incidence of diarrhea was significantly lower in the LGG-treated group (5.21 episodes per subject per year) compared to the controls (6.02 episodes per subject per year), with the reduction most pronounced in the 18 – 29 month age group. When subjects were stratified on the basis of breast feeding, a significant reduction in the incidence of diarrhea was found for the non-breastfed group only. Among breastfed subjects, the 30 – 41 month-old group administered LGG had significantly more diarrhea than subjects of a similar age fed placebo, although the overall incidence of diarrhea in this age group was not significantly different between the LGG and control groups. No differences in the duration of diarrhea were observed in the entire study population or in any subset thereof. (Oberhelman *et al.*, 1999).

Szajewska, *et al.* (2001) evaluated the efficacy of LGG in the prevention of nosocomial diarrhea in young children admitted to pediatric hospitals in a randomized, double-blind, placebo controlled study. Eighty-one subjects of ages one to 36 months met the study criteria in that they were admitted to the hospital for reasons other than diarrhea, had no history of probiotic use over the seven days prior to admission, had no acute gastroenteritis over the three days prior to admission, had no symptoms other than diarrhea that suggested gastroenteritis or underlying intestinal disease (*e.g.*, vomiting or blood in stool), and were not breast fed. Subjects received either placebo (36 children) or a dose of 6×10^9 cfu of LGG (45 children) reconstituted in a small amount of water with regular feedings twice daily for the duration of their hospital stay and were evaluated daily for stool

number and consistency. Stool samples were obtained weekly and during episodes of diarrhea and were analyzed for bacteria and rotavirus antigen.

"LGG was well tolerated, and no adverse effects of the treatment were noted." Those subjects who received LGG had a significantly reduced incidence of nosocomial diarrhea relative to controls (6.7% versus 33.2%, respectively). "Rotavirus was the most common infectious agent associated with nosocomial diarrhea," occurring in one of the three cases of nosocomial diarrhea observed in the LGG treatment group and six of the 12 cases in the control group. Although the prevalence of rotavirus infection (defined as asymptomatic and symptomatic patients with rotavirus antigen shedding in stool) was similar in the treatment and control groups (20% versus 27.8%, respectively), the incidence of gastroenteritis was significantly reduced in the treatment group (2.2%) relative to the control group (16.7%). The investigators concluded that "[p]rophylactic administration of LGG significantly reduced the risk of nosocomial diarrhea in infants, particularly with respect to nosocomial rotavirus gastroenteritis." (Szajewska *et al.*, 2001).

(3) Effects on Allergy Management

As explained by Isolauri (1995), infants with cow's milk allergy (CMA) have impaired mucosal barrier function, and such an impairment may predispose this group of infants to bacterial translocation. A number of clinical studies have evaluated LGG when fed with extensively hydrolyzed milk-protein formulas to infants with a history of CMA. In these studies, most infants and toddlers that were fed LGG for up to six months showed symptomatic improvement of cow milk

protein allergy (atopic dermatitis), with no evidence of adverse effects on growth or other plasma and clinical markers. No evidence of bacterial translocation or clinical infection was reported.

In infants with atopic eczema and CMA, Majamaa and Isolauri (1997) evaluated the effects of LGG in an extensively hydrolyzed whey formula on the clinical and immunological changes resulting from elimination of cow's milk from the diet. Twenty-seven infants of ages 2.5 to 15.7 months who fulfilled the Hanifin criteria (*see* Hanafin, 1987) for atopic eczema completed the randomized, double-blind study. The mean age at onset of symptoms of atopic eczema was 2.4 months, and the durations of exclusive and total breast-feeding averaged 2.8 and 5.9 months, respectively. The subjects were placed on a cow's milk elimination diet and received an extensively hydrolyzed whey formula with and without 5×10^8 cfu of LGG per gram of formula for one month followed by the same whey formula unsupplemented with LGG for one month. After the study period, the subjects were allocated to double-blind, placebo controlled cow's milk challenge or open cow's milk challenge, and only those who had a positive reaction to the cow's milk challenge (13 test subjects and 14 control subjects) were included in the final study population. All subjects were examined by a physician after one and two months of study participation, and blood and fecal samples were collected at the initiation of the study and after one and two months of study participation. Depending on the age of the child, daily formula intake varied between 500 and 1000 mL.

No safety-related endpoints were discussed by the authors, and no specific adverse effects were reported. The severity of atopic dermatitis was comparable between the control group (SCORAD = 21) and LGG group (SCORAD = 26) before treatment ($p = 0.33$). After the one-month study period, the clinical score of atopic dermatitis improved significantly in subjects receiving LGG-supplemented formula (SCORAD = 15) relative to controls (SCORAD = 19) due to the reduction of the extent, intensity and subjective score. No significant differences were observed after two months (*i.e.*, one month after LGG-supplementation had ceased) between the LGG group (SCORAD = 16) and the control group (SCORAD = 14). The concentrations of α_1-antitrypsin and the median (lower quartile to upper quartile) concentration of fecal tumor necrosis factor-α decreased significantly in the treated group but not in the controls. The authors concluded: "These results suggest that probiotic bacteria may promote endogenous barrier mechanisms in patients with atopic dermatitis and food allergy, and by alleviating intestinal inflammation, may act as a useful tool in the treatment of food allergy." (Majamaa and Isolauri, 1997).

Isolauri *et al.* (2000) conducted a randomized, double-blind, placebo-controlled study to assess the ability of LGG or *Bifidobacterium lactis* Bb-12 to control allergic inflammation in infants with atopic eczema. A total of 27 infants (*i.e.*, 9 subjects per group) with a mean age of 4.6 months, all of whom manifested atopic eczema during exclusive breast feeding and had not been exposed to any infant or substitute formula prior to enrollment, were weaned to extensively hydrolyzed whey formulas with or without supplementation with 3×10^8 cfu of LGG

or 10^9 cfu of Bb-12 per gram of formula for a least six months. The mean age at onset of symptoms of atopic eczema was 1.6 months. The severity of atopic eczema, body measurements, and venous blood and stool samples were taken prior to introduction of the whey formulas, and two and six months after introduction. The primary outcome measures were the extent, severity, and subjective symptoms (*e.g.*, pruritus and sleep loss) of atopic eczema (via SCORAD scores) and the growth and nutrition of the subjects. Secondary measures included serum concentrations of soluble surface cell molecules and cytokines/chemokines and urinary concentrations of methyl-histamine and eosinophilic protein X.

No safety-related endpoints were discussed by the authors, and no specific adverse effects were reported. The mean intake of probiotics over the six month study period was 3 – 8 x 10^{10} cfu per day, and the growth of all subjects (as measured by length-per-age standard deviation scores) during this period was normal. The SCORAD score during breast feeding averaged 16 for study participants. Relative to controls (SCORAD 13.4), after two months of supplementation, a significant improvement in the severity of atopic eczema was observed in all subjects fed LGG (SCORAD 1) and Bb 12 (SCORAD 0), in parallel with a reduction on the concentration of soluble CD4 in serum and eosinophilic protein X in urine. After six months, all groups had SCORAD scores of 0. The authors concluded: "The results provide the first clinical demonstration of specific probiotic strains modifying the changes related to allergic inflammation. The data

further indicate that probiotics may counteract inflammatory responses beyond the intestinal milieu." (Isolauri *et al.*, 2000).

Kalliomàki *et al.* (2001) conducted a randomized, double-blind, placebo-controlled trial in which capsules containing placebo or 1 x 10^{10} cfu of LGG were given daily for two to four weeks prenatally to 159 mothers who had at least one first-degree relative with atopic eczema, allergic rhinitis, or asthma. After delivery, breastfeeding mothers could take the capsules; otherwise, the infants received the same dose of placebo or LGG mixed in water and given by spoon for six months. Children were examined during the neonatal period and at ages 3, 6, 12, 18, and 24 months, and the examination included inspection of eyes, ears, nose, and skin, auscultation of heart and lungs, palpitation of abdomen, and assessment of growth and neurological development. Sensitization by skin-prick tests were performed at 6, 12, and 24 months, and antigen-specific IgE assays were performed in umbilical cord blood and at ages 3, 12, and 24 months. The outcome measure was atopic disease at two years of age; therefore, chronic recurring atopic eczema was the primary endpoint.

No safety-related endpoints were discussed by the authors, and no specific adverse effects were reported. One hundred and thirty-two infants completed the two-year study, with non-compliance being the only reason for discontinuation. Atopic eczema was diagnosed in 46 of the 132 children (35%) at two years of age, with mean age of onset of 4.9 months, while asthma was diagnosed in six children and allergic rhinitis in one. The frequency of atopic eczema in the

LGG-treated group (15 of 64 subjects) was half that of the control group (31 of 68 subjects), although mean SCORAD scores of those with atopic eczema were not statistically different. Approximately 56 percent of both groups of infants were fed capsules (as opposed to maternal intake), but the effect did not depend on the mode of administration. Concentration of total IgE and frequencies of increased antigen-specific IgE concentrations and of positive reactions in skin-prick tests were similar in the LGG and control groups. The authors concluded that "*Lactobacillus* GG was effective in prevention of early atopic disease in children at high risk." (Kalliomaki *et al.*, 2001).

Kankaanpää *et al.* (2002) assessed the influence of LGG- and Bb-12-supplemented formula on the composition of plasma lipids in a randomized, placebo-controlled, double-blind study in atopic infants. Fifteen infants who were referred to a pediatric clinic on the basis of atopic eczema (all fulfilled the Hanifin criteria) and who were exclusively breastfed were weaned to an extensively hydrolyzed infant formula alone or supplemented with either 3 x 10^8 cfu of LGG or 1 x 10^9 cfu of Bb-12 per gram of formula. The mean age of the infants was 5.2 months, and average length of feeding was 5.5 months, although this varied considerably within the test groups (control: 5.7 months, LGG: 4.4 months, Bb-12: 7.3 months). Blood samples were collected prior to the initiation of formula feedings and two months after study initiation. (Kankaanpaä *et al.*, 2002).

No safety-related endpoints were discussed by the authors, and no specific adverse effects were reported. "All formulas were well tolerated by these

infants." The average intake of formula for all groups was approximately 75 milliliters per kilogram of body weight per day, which calculates to approximately 600 milliliters per day over the course of the study. In plasma neutral lipids, α-linolenic acid proportions were reduced by LGG supplementation, while in phospholipids, LGG supplementation did not influence these proportions. The investigators concluded:

> In this pilot study we have shown that the use of probiotic supplemented infant formula resulted in altered plasma lipid PUFA composition when compared to a regular, non-supplemented formula. As the PUFA composition of mothers' breast milk was not determined here, one can speculate whether these changes are simply due to the shift in individual diets or the result of specific interactions between priobiotics and PUFA. (Kankaanpää *et al.*, 2002).

Pohjavuori *et al.* (2004) examined the effects of LGG alone or in a mixture of four bacterial species on treatment of CMA and IgE-associated dermatitis in a randomized, double-blind, placebo-controlled study in infants. Two hundred and thirty infants with atopic dermatitis who were suspected to have CMA completed the study, and 119 of these subjects were taken for analysis. After beginning a strict cow's milk-free diet and skin treatment, the subjects received either placebo, 5 x 10^9 cfu of LGG, or a mixture of 5 x 10^9 cfu of LGG, 5 x 10^9 cfu of *L. rhamnosus* LC705, 2 x 10^8 cfu of *Bifidobacterium breve* Bbi99, and 2 x 10^9 cfu of *Propionibacterium freudenreichii* ssp *shermanii* JS, twice daily with extensively hydrolyzed whey formula for four weeks.

Clinical improvement was evaluated prior to diet supplementation with probiotics, after the four-week treatment period, and four weeks after the end of treatment. After eight weeks of cow's milk elimination (which included four weeks of probiotic supplementation), a double-blind, placebo-controlled, crossover cow's milk challenge was initiated. Skin prick tests were performed at the initial visit with commercial allergen extracts of egg white, cat, dog, and birch, and duplicate tests were performed with fat-free cow's milk, cereal grains, purified gliadin, and a panel of 10 widely used adapted cow's milk infant formulas, extensively hydrolyzed amino acid-based infant formulas, and soy-based infant formulas. Concentrations of serum cow's milk and wheat-specific IgE were measured, as well. (Pohjavuori *et al.*, 2004).

No safety-related endpoints were discussed by the authors, and no specific adverse effects were reported. Of the 119 infants (mean age of 6.5 months) taken for analysis, CMA was diagnosed in 65 subjects, IgE-associated CMA was diagnosed in 42 subjects, and non-IgE-associated CMA was diagnosed in 32 subjects. In 54 subjects, the cow's milk challenge was negative, and CMA was excluded. IgE-associated dermatitis was diagnosed in 72 subjects. Secretion of T_H1 cytokine IFN-γ by PMBCs before the probiotic treatment was significantly lower in subjects with CMA and in subjects with IgE-associated CMA relative to subjects without CMA. In those subjects fed LGG, the level of secreted IFN-γ increased in those subjects with CMA and in those subjects with IgE-associated dermatitis relative to controls. Secretion of IL-4 increased significantly in subjects with CMA who consumed the

mix of probiotics but not in the equivalent population who consumed LGG alone. (Pohjavuori *et al.*, 2004).

The authors concluded: "Deficiency in IFN-γ response appears to be related to CMA. LGG raises IFN-γ production of PBMC in infants with CMA and in infants with IgE-associated dermatitis and may thus provide beneficial T_H1 immunomodulatory signals. [The mixture of probiotics], although containing LGG, appears to modulate the immune responses differently." (Pohjavuori *et al.*, 2004).

In a study similar to Pohjavuori *et al.* (2004), Viljanen *et al.* (2005) studied the effects of LGG alone or in a mixture of four bacterial species on treatment of atopic eczema/dermatitis syndrome (AEDS) in food-allergic infants. Two hundred and thirty infants (mean age of 6.4 months) who were under 12 months of age upon entering, had symptoms suggestive of CMA, and consumed no probiotics regularly (*i.e.*, no use longer than one week or within six weeks of entering the study) completed the study. After all products containing cow's milk were eliminated from the diets of the infants and the mothers of breast-fed infants, the subjects received either placebo, 5 x 10^9 cfu of LGG, or a mixture of 5 x 10^9 cfu of LGG, 5 x 10^9 cfu of *L. rhamnosus* LC705, 2 x 10^8 cfu of *Bifidobacterium breve* Bbi99, and 2 x 10^9 cfu of *Propionibacterium freudenreichii* ssp *shermanii* JS, twice daily with extensively hydrolyzed whey formula for four weeks. Parents recorded any skin, gastrointestinal, or respiratory system symptoms in a daily diary.

\\\DC - 087097/000006 - 2360895 v4

Eczematous lesions were treated with hydrocortisone as needed for a maximum of two weeks in a row during the study period. Clinical improvement was evaluated prior to diet supplementation with probiotics, after the four-week treatment period, and four weeks after the end of treatment. After eight weeks of cow's milk elimination (which included four weeks of probiotic supplementation), a double-blind, placebo-controlled, crossover cow's milk challenge was initiated. Skin prick tests were performed at the initial visit with commercial allergen extracts of egg white, cat, dog, and birch, and duplicate tests were performed with fat-free cow's milk, cereal grains, purified gliadin, and a panel of 10 widely used adapted cow's milk infant formulas; extensively hydrolyzed, amino acid-based infant formulas; and soy-based infant formulas. Various unspecified antibiotic treatments (not specified) occurred throughout the study population during the testing period. (Viljanen *et al.*, 2005).

No safety-related endpoints were discussed by the authors, and no specific adverse effects were reported. The mean SCORAD decreased by 65 percent, with no differences between treatment groups both immediately following and four weeks after the treatment ceased. No treatment differences were observed in subjects with CMA; however, the LGG-treated group of IgE-sensitized infants showed a statistically significant reduction in SCORAD relative to the placebo group from the initiation of the study to four weeks after treatment ceased. "Exclusion of infants who had received antibiotics during the study reinforced the findings in the IgE-sensitized subgroup;"... "[f]or all infants, however, these

differences between treatments remained nonsignificant. The authors concluded: "Treatment with LGG may alleviate AEDS symptoms in IgE-sensitized infants but not in non-IgE sensitized infants." (Viljanen *et al.*, 2005).

The clinical and immunological effects of an extensively hydrolyzed formula supplemented with either LGG or *L. rhamnosus* was studied by Brouwer *et al.* (2006) in a randomized, double-blind, placebo-controlled trial. Fifty-three infants below five months of age who fulfilled the Hanafin criteria for atopic dermatitis, were suspected of having CMA, and were exclusively formula fed at enrollment were recruited, and 50 completed the trial. Infants using antihistamines, oral corticosteroids, probiotics, antimycotics, or antibiotics during the four weeks prior to enrollment and those with congenital gastrointestinal malformation were excluded.

All infants were fed extensively hydrolyzed whey formula (Nutrilon Pepti) during the three to five week baseline period, followed by randomization into a control group (n=17) or treatment groups in which the hydrolyzed formula was supplemented with 5 x 10^9 cfu of LGG (n=16) or *L. rhamnosus* (n=17), respectively, per 100 mL of formula for three months. Severity of atopic dermatitis was measured by SCORAD before and after the baseline period and after one, two, and three months of intervention with the study formula. Allergic sensitization was evaluated by measurement of total IgE, a panel of food specific IgEs, and a skin prick testing for cow's milk, while inflammatory parameters were blood eosinophils, eosinophil protein X in urine, fecal α-1-antitrypsin, and production of IL-4, IL-5 and

IFN-γ by peripheral blood mononuclear cells after polyclonal stimulation. Infants who showed an improvement in atopic dermatitis, based on SCORAD and parental observation, were given an open cow's milk formula challenge for up to one week. Those infants who had a reaction to the cow's milk were placed in a randomized, double-blind, placebo-controlled challenge to cow's milk formula for 2 to 7 days, based on whether the open challenge elicited an acute or delayed reaction. (Brouwer *et al.*, 2006).

No safety-related endpoints were discussed by the authors, and no specific adverse effects were reported. Of the three infants who did not complete the study, two were withdrawn for personal reasons not related to atopic dermatitis, and one was withdrawn after CMA was excluded. "No statistically significant effects of probiotic supplementation on SCORAD, sensitization, inflammatory parameters or cytokine production between groups were found. Only four infants were diagnosed with CMA." The authors concluded: "Our results indicate that oral supplementation with these probiotic bacterial strains will not have a significant impact on the symptoms of infantile [atopic dermatitis]." (Brouwer *et al.*, 2006).

VIII. SPECIFIC SAFETY CONSIDERATIONS

The Joint FAO/WHO Expert Consultation on Evaluation of Health and Nutritional Properties in Food, which was held in Córdoba, Argentina in October 2001, recognized that there is a need for guidelines to set out a systematic approach for the evaluation of probiotics in food leading to the substantiation of health claims. Consequently, FAO/WHO convened a Working Group to generate these guidelines

and recommend criteria and methodology for the evaluation of probiotic safety. The guidelines issued by the Joint FAO/WHO Working Group specifically recommend that an assessment of the safety of a probiotic strain should include an evaluation of the potential for adverse effects. These effects include the possible impact of probiotic administration on systemic infections, deleterious metabolic activities and host nutrition, excessive immune stimulation in susceptible individuals, and gene transfer. (FAO/WHO, 2002). All of these topics are discussed in relation to LGG as follows.

A. Systemic Infections

Historically, both lactobacilli and bifidobacteria strains associated with food products have been considered to be generally safe (Donohue *et al.*, 1993; Gasser, 1994; Donohue and Salminen, 1996; Saxelin *et al.*, 1996b; Salminen *et al.*, 1998). However, there are some case reports of clinical infections caused by indigenous strains of lactobacilli, and recently, LGG, in immune compromised patients. Therefore, the ability of a probiotic strain of lactobacilli, in general – and LGG, in particular – to become an opportunistic pathogen must be addressed.

1. Clinical Infections Involving Lactobacilli

Cases of infection by lactic acid bacteria are extremely rare (0.6 – 0.8 positive blood cultures per million people per year). Over the past 30 years there have been about 180 published cases of bacteremia and 69 cases of endocarditis caused by lactobacilli (Aguirre and Collins, 1993; Gasser, 1994; Salminen and Donohue, 1996). The majority of these cases have occurred in patients with

compromised immune status and/or mucosal barrier function due to underlying conditions such as heart disease and diabetes or therapeutic treatment (*e.g.*, dental surgery). Positive blood cultures for lactobacilli have also been regarded as an indicator of serious or fatal underlying disease (Husni *et al.*, 1997). With regard to cases of endocarditis, strains of lactobacilli are only rarely involved (0.05 – 0.4% of total) compared to bacteria shown to be most highly associated with endocarditis (*e.g.*, >79% by the *Streptococcus-Staphylococcus* group). Cases of lactobacilli endocarditis are typically associated with serious underlying health conditions, such as structural heart disease, that predisposed the patient to opportunistic infections. These observations suggest that lactobacilli are much less capable of adhering to intact cardiac valves than other bacteria and only become involved in infections when a predisposing circumstance exists. Although lactobacilli play a minor etiologic role in the context of all cases of endocarditis, in cases where etiologic strains were identified at the species level (a procedure that is not always done), the majority of cases were caused by vancomycin-resistant strains of *L. rhamnosus*, *L. plantarum*, and *L. casei* (Gasser, 1994; Donohue and Salminen, 1996).

2. Surveillance Studies

The safety of LGG is supported by surveillance studies that evaluated potential increases in clinical infections with increased probiotic consumption. Such studies showed that during a nine year period, despite a notable increase in LGG consumption (~10-fold) in Finland, the number of infections involving *Lactobacillus* species reported to Helsinki health authorities remained at a constant background

level of 10-20 cases per year (Salminen *et al.*, 2002, Saxelin *et al.*, 1996a). Saxelin *et al.*(1996a) found that over the 1989 – 1992 period, "the results did not provide evidence that any particular species or subspecies of *Lactobacillus* was the cause of the infections; no infections caused by isolates similar to [LGG] were observed." Salminen *et al.* (2002) identified 11 out of a total of 48 isolates to be identical to LGG over the 1994-2000 period but concluded that "[t]he results indicate that increased probiotic use of LGG has not led to an increase in *Lactobacillus* bacteremia."

3. Infections Associated With Lactobacilli

Documented cases of systemic infections that may be associated with consumption of lactic acid bacteria are extremely rare. Seven case reports have been published on clinical infections involving lactobacilli where the use of LGG as a probiotic is implicated as the potential source for the infection.

In a case reported by Rautio *et al.* (1999), a 74-year-old woman with a history of diabetes and hypertension who had been treated for many years with enalapril maleate, bisoprolol fumerate, and glipizide was admitted to the hospital after experiencing mild abdominal discomfort and fever. A strain of *L. rhamnosus* was isolated from a liver abscess, the strain was found to be identical to LGG, and its identity was confirmed by molecular methods (*e.g.*, pulsed-field gel electrophoresis (PFGE)). The fermentation pattern and enzymatic reactions of this isolate were compatible with a probiotic strain *L. rhamnosus* GG used in dairy products consumed by the patient during the four months before her symptoms

onset. The patient was initially treated with penicillin G then piperacillin/tazobactum, and, after her condition worsened, ciprofloxacin and clindamycin. The patient recovered gradually, was discharged after six weeks, and was in good health following an additional two months of antibiotic therapy.

In a second case, reported by Mackay *et al.* (1999), a 67-year-old man with previously documented mild mitral valve regurgitation due to mitral valve prolapse had persistent dry cough, slight shortness of breath, and weight loss. The patient was taking (by chewing an swallowing) one or two capsules daily of a freeze-dried probiotic containing 2 x10^9 *L. rhamnosus* and several other bacterial species and had several carious teeth removed a few weeks earlier. He was diagnosed as having endocarditis, and "[o]ne of the organisms cultured from the probiotic capsules was indistinguishable from that isolated from the blood cultures by virtue of identical cultural appearance, reactions in API 50CHL, sensitivity patterns and pyrolysis mass spectrometry. The patient was treated with ampicillin+gentamicin for two weeks prior to discharge, followed by pivampicillin+probenecid for six weeks, and was well at follow-up three months after admission.

A third case, reported by Presterl *et al.* (2001), involved a 23-year-old male with a previously documented bicuspid aortic valve and a four-year history of diabetes insipidus, which was being addressed with intranasal octreotid treatment. The patient was consuming up to 1.5 liters of probiotic yogurt (reportedly containing "2 x 10^9 cells of *L. rhamnosus*") and sour milk when presenting with fever, increased fatigue, and dyspnoea. He was diagnosed with endocarditis and a

strain of *L. rhamnosus* was isolated from his blood. Despite treatment with amoxicillin clavulanic acid, the patient showed signs of acute heart failure and underwent emergency valve replacement. "The postoperative course was uneventful," and "the patient was well at follow-up visits 3, 6, and 12 months after the end of therapy."

The isolate was compared to an *L. rhamnosus* isolate from the yogurt in the Biolog system and was reported to differ in "10 of ... >100" reactions. Although the identity of the patient's isolate was confirmed at the species level using biochemical methods, it was found to be different based on the molecular genotyping method (*e.g.*, random amplification of polymorphic DNA (RAPD)). The authors concluded: "Thus, in the absence of any other possible entry site, the source of the endocarditis remains unknown." (Presterl *et al.*, 2001).

Kunz *et al.* (2004) reported on two cases of bacteremia in neonates who suffered from short gut syndrome. The first case involved a 36-week gestation infant whose syndrome was secondary to congenital intestinal atresia and volvulus. Total parenteral nutrition was necessary, he experienced cholestasis, and a regimen of LGG supplementation was prescribed on the 95th day of life. Following symptoms consistent with infection or sepsis on the 23rd day of supplementation, blood cultures grew a *Lactobacillus* species sensitive to ampicillin. Blood cultures taken after 10 days of treatment with ampicillin were negative, LGG supplementation was discontinued, and the patient had no additional *Lactobacillus* bacteremia. Via endoscopy, the patient's intestine was found to be inflamed and friable. The

\\\DC - 087097/000006 - 2360895 v4

authors stated: "We suspect that the fragility of the intestine may have promoted transmigration of the supplemental *Lactobacillus* GG." Although LGG was suspected, fingerprinting of the isolate was not performed.

In the second case, a 34-week gestation infant's syndrome resulted from a severely infracted intestine at birth; he underwent a gastrostomy and jejunostomy shortly after birth; he was dependent on total parenteral nutrition; and after rapidly developing a cholestatic liver disease, he began a regimen of LGG supplementation on day of life 17. Despite tolerating the LGG well, he experienced an elevated temperature, tachycardia, and increased apneic events, and blood cultures grew a *Lactobacillus* species sensitive to both ceftriaxone and ampicillin. LGG supplementation was discontinued, the patient completed a 10-day course of ceftriaxone and ampicillin without complications, and he experienced no additional episodes of *Lactobacillus* bacteremia. The authors stated "Upper endoscopy after the sepsis episode revealed mild inflammation of the intestine. As in Case 1, we suspected that the patient's intestinal inflammation led to translocation of *Lactobacillus* GG from the intestinal lumen." DNA fingerprinting (PFGE) confirmed the blood culture isolate to be indistinguishable from the LGG in the supplement. (Kunz *et al.*, 2004).

Land *et al.* (2005) reported on two cases of *Lactobacillus* sepsis following administration of LGG. The first case involved a six week old infant born at term who was admitted to the hospital for a scheduled repair of a double-outlet right ventricle and pulmonic stenosis. The postoperative course was complicated by

pacemaker placement, pulmonary artery banding, seizures, acute renal insufficiency, and prolonged respiratory support. Following several courses of antibiotics for suspected sepsis, on day 57 of hospitalization, the infant developed copious non-bloody diarrhea and was afebrile. Beginning on day 79 of hospitalization, his diet was supplemented with 10^{10} cfu of LGG daily through his gastronomy tube. On day 99 of hospitalization, signs of endocarditis developed, and blood cultures grew a *Lactobacillus* species susceptible to penicillin G, erythromycin, clindamycin, gatifloxacin, tetracycline, and trimethoprim-sulfamethoxazole that was later identified by repetitive element sequence-based polymerase chain reaction DNA fingerprinting as indistinguishable from LGG. Following a change in antibiotics to penicillin G and gentamicin, the patient recovered fully.

The second case involved a six year old child with cerebral palsy, microcephaly, mental retardation, and a seizure disorder who required feeding through a gastrojejunostomy tube. She was admitted to the hospital for a urinary tract infection, fever, and abdominal pain following revision of a spinal rod (for scoliosis) one week earlier, received subsequent courses of ceftriaxone and vancomycin, developed diarrhea, and after feeding was initiated through a central venous catheter, catheter-related sepsis developed. Beginning on day 25 of hospitalization, 10^{10} cfu of LGG in water was administered by injection into the gastrojejunostomy tube. On day 69 of hospitalization, the patient developed signs of infection and blood cultures yielded a *Lactobacillus* species that was later identified by repetitive element sequence-based polymerase chain reaction DNA

\\\DC - 087097/000006 - 2360895 v4

fingerprinting as indistinguishable from LGG. Following another course of ceftriaxone and vancomycin treatment, the patient was discharged from the hospital (day 86 of hospitalization) and she had no signs of illness one month after discharge. (Land *et al.*, 2005).

In summary, all known cases of clinical infections where probiotic lactobacilli involvement was suspected occurred in subjects with some type of underlying disease or health condition (*e.g.*, liver abscess, diabetes, heart damage, short gut syndrome). The identity between the clinical isolate and the strain of lactobacilli consumed by the subject was confirmed by appropriate molecular methods in only four of these cases. The infections reported in the infant population all involved hospitalized patients who received LGG supplementation in an attempt to treat complications resulting from the underlying hospitalization: cholestasis and cholestatic liver disease (Kunz et al., 2004); non-bloody diarrhea and catheter-related sepsis (Land *et al.*, 2005). These results establish that LGG has the potential, in rare instances, to be an opportunistic pathogen in severely compromised subjects. Nevertheless, the extensive clinical studies involving the use of LGG in healthy subjects and those with less severe medical conditions – and the usual absence of adverse effects of LGG in these populations – go far towards establishing that LGG is general recognized as safe in these populations.

B. Adverse Impact on Host Nutrition and Growth

The impact of LGG on host nutrition in full and preterm infants is described in detail, above. While relatively few studies have evaluated the impact

of probiotics on host nutrition, the addition of LGG to infant formula does not appear to impact nutrition or growth and development in the infant based on the following data.

The randomized, double-blind, placebo-controlled growth study conducted by Vendt *et al.* (2006) demonstrated that infants consuming cow's milk formula supplemented with 10^7 cfu of LGG per gram of dry formula, resulting in an average daily dose of approximately 10^9 cfu of LGG, during the first six months of life exhibited normal growth. Moreover, other clinical studies on infants, while not designed as growth studies *per se*, have found no differences in growth indices between those subjects consuming LGG and those serving as controls. (Millar *et al.*, 1993; Stansbridge *et al.*, 1993).

In general, probiotic strains such as LGG utilize the same types of macronutrients and micronutrients needed by the host but in considerably lower quantities relative to the nutrient needs of the human infant. In addition, the majority of nutrient digestion and absorption in the human infant occurs in the stomach and small intestine before reaching the colon, where the majority of LGG would reside and utilize whatever nutrients may remain.

In some *in vitro* studies, lactic acid bacteria have actually been shown to synthesize some B vitamins in fermented dairy products (Elmadfa *et al.*, 2001). However, if this synthesis is indeed occurring in the gastrointestinal tract it would be negligible given the low numbers of LGG present. Also, the vitamin synthesis of

LGG would be relatively low as compared to the vitamin production by other members of the gastrointestinal biota.

Evidence from clinical studies indicates that ingestion of up to 10^9 cfu per day of LGG has little impact on the overall composition of the intestinal microbiota. Therefore, it is reasonable to assume that LGG would have negligible impact on nutrient levels in infant formula.

There is no scientific evidence indicating probiotic lactobacilli such as LGG produce factors that might inhibit host enzymatic activity or nutrient availability. In fact, it is more commonly believed that probiotics may benefit the intestinal milieu by slightly increasing levels of substances that might positively impact host nutrient availability, particularly SCFA. Increased SCFA produces a lower intestinal pH, which improves the solubility of minerals such as Ca, Mg, Zn, and Fe. That said, the overall impact on nutrient availability of daily consumption of 10^8-10^9 cfu of LGG likely is minimal.

There is no evidence that consumption of LGG in relatively high amounts by animals in toxicological studies has any adverse effects on overall growth and nutritional status.

These lines of evidence lead to the conclusion that daily consumption of at least 10^9 cfu of LGG will not have an adverse effect on nutrient absorption that would have a negative impact on growth and development.

C. Unfavorable Immune Stimulation

Infants are most vulnerable to allergic sensitization during the first months of life because they are born with an immature intestinal barrier. A key dilemma of the developing host immune system is the ability to generate effective responses to pathogenic microbes and yet maintain hypo-responsiveness to antigens in food and the intestinal microbiota. In newborn infants, the balanced regulation of signals from T helper 1-type (Th1) cells (*e.g.*, IL4, IL5) and Th-2 cells (*e.g.*, IL6, TNFα) appears to be important for normal development of the immune system (Pene *et al.*, 1988; Prescott *et al.*, 1999; Nagler-Anderson, 2000). There is increasing evidence that certain members of the intestinal microbiota, such as lactobacilli and bifidobacteria, play a role in potentiating IgA responses towards potentially harmful antigens as well as down-regulating IL4-mediated responses. IL-4 plays a key role in development of Th-2 responses, which are involved in regulating IgE production and eosinophilia, commonly associated with atopic diseases such as eczema and asthma.

LGG has been shown to promote host defenses by reducing gut permeability, enhancing nonspecific resistance and humoral immune responses (Isolauri *et al.*, 1995; Kaila *et al.*, 1992; Majamaa *et al.*, 1995), and down-regulating inflammatory responses to antigen challenge (Majamaa and Isolauri, 1997). The host conditions under which LGG modulates immune defenses have not been determined. However, LGG appears to stimulate immune responses in healthy subjects and down-regulate inflammatory responses in hypersensitive subjects.

More importantly, there is no evidence that LGG enhances susceptibility to infections in patients where it may be down-regulating immune responses, such as in CMA infants, or that LGG causes adverse reactions due to over-stimulation of immune responses. In fact, the ability of LGG to mitigate CMA has been evaluated in clinical studies and shown, in some studies, to reduce the symptoms of the allergy (Majamaa and Isolauri, 1997; Pohjavuori *et al.*, 2004). In addition, LGG has been used in limited clinical trials to improve conditions of patients with Crohn's disease (Gupta *et al.*, 2000) or irritable bowel syndrome (O'Sullivan and O'Morain, 2000) with no evidence of adverse effects.

In summary, there is no reported evidence to indicate that ingestion of LGG increases risk of disease by causing over-stimulation of immune responses in healthy subjects or excessive down regulation in hypersensitive infants.

D. Gene Transfer Capability

The most important issue involving the transfer of genetic material in bacteria is the potential for one bacterium to transmit antibiotic resistance to another bacterium that has pathogenic properties. As discussed previously, a variety of different lactobacilli, including LGG, are known to be resistant to clinically important antibiotics such as vancomycin (Charteris *et al.*, 2001; Salminen *et al.*, 1998). Vancomycin resistance in lactobacilli is most often chromosomal and not plasmid mediated. (Tykkynen *et al.*, 1998). In conjugation experiments with strains of enterococci, Tynkkynen *et al.* (1998) showed that LGG does not contain plasmids and is unable to transfer its chromosomal vancomycin

resistance genes to enterococcal strains via conjugation. As noted earlier, recent unpublished genetic sequencing information for LGG indicates that no analog to any known vancomycin resistance gene was found, confirming that resistance is a property of the cell wall structure. Moreover, LGG is susceptible to a number of other antibiotics in the rare event that this strain is associated with a clinical infection. (Charteris *et al.*, 2001). Based on these facts, it is apparent that the capability of LGG to transfer antibiotic resistance is extremely low or nonexistent.

IX. CONCLUSION

In conclusion, extensive research indicates that LGG has no adverse impact on nutritional, metabolic, or immune parameters at the level proposed for use in infant formula intended for healthy, term infants from the time of birth or for term infants with CMA or diarrhea from the time of diagnosis. Further, LGG has little potential for infectivity, with the possible exception of its use in infants who are severely immune compromised or have major gastrointestinal or other disorders (*i.e.*, short bowel syndrome, congenital heart disease). For this reason, it may be advisable that infants with severe immune deficiency, short bowel syndrome, or congenital heart disease be fed infant formulas containing LGG only under the direct care and supervision of a physician, as is likely in any case. In addition, proper sanitary procedures should be followed in preparing infant formula containing LGG (or any other probiotic) in the presence of infants with other significant medical interventions (*i.e.*, central lines).

LGG is an extremely well characterized strain of probiotic lactobacilli and has been used in food products, including dietary supplements, in both Europe and the United States for over 10 years. It has been used in infant formula in the EU since 2003, accruing over 8 million infant-days of consumption, and no adverse reactions have been reported. LGG has been evaluated in numerous clinical studies involving preterm and term infants at dose levels ranging from 10^8 to 10^{10} cfu per day. Infants in these studies received LGG for up to several months at a time and showed no evidence of adverse reactions or intolerance to treatment. In contrast, most subjects experienced a health benefit such as a reduced risk of experiencing diarrhea, shortening of the duration of acute diarrhea, or enhanced immune response following viral diarrhea. Both the published experimental evidence and the documented history of safe use of LGG confirm that there is a reasonable certainty that no harm will result from addition of LGG to infant formula at the levels proposed by Mead Johnson and under its intended conditions of use.

The GRAS status of Mead Johnson's intended use of LGG was confirmed through the deliberations of an Expert Panel consisting of Dennis M. Bier, M.D., Joseph F. Borzelleca, Ph.D., Roger A. Clemens, Dr.P.H., Michael P. Doyle, Ph.D., Berthold V. Koletzko, M.D., and Daniel J. O'Sullivan, Ph.D., who both individually and collectively reviewed the information contained in this monograph.

X. REFERENCES

Adams, M.R. 1999. Safety of industrial lactic acid bacteria. *J. Biotechnol.* 68: 171-178.

Agarwal, R, N. Sharma, R. Chaudhry, A. Deorarı, V.K. Paul, I.H. Gewolb, and P. Panigrahi. 2003. Effects of oral *Lactobacillus* GG on enteric microflora in low-birth-weıght neonates. *J. Pediatr. Gastroenterol. Nutr.* 36: 397-402.

Aguırre, M. and M.D. Collıns. 1993. Lactic acıd bacterıa and human clinical infection. *J. Appl. Bacteriol.* 75: 95-107.

Alander, M., R. Satakarı, R. Korpela, M. Saxelın, T. Vılpponen-Salmela, T. Mattıla-Sandholm, and A. Wrıght. 1999. Persistence of colonizatıon of human colonic mucosa by a probiotic strain, *Lactobacillus rhamnosus* GG, after oral consumption. *Appl. Environ. Microbiol.* 65: 351-354.

Arvola, T., K. Laiho, S. Torkkeli, H. Mykkaneh, S. Salmınen, L. Maunula, and E. Isolauri. 1999. Prophylactic *Lactobacillus* GG reduces antibiotic-associated diarrhea in children with respiratory infections: A randomized study. *Pediatrics* 104 (5): e64.

Axelsson, L. Lactic acid bacteria: classification and physiology. 1998. In: Salminen S., von Wright, A., eds. *Lactic acid bacteria, microbiology and functional aspects.* New York: Marcel Dekker, Inc., 1-73.

Barshop, B.A., W.L Nyhan, P.H. Steenhout, W Endres, D.R. Tolan, and R.A. Clemens. 2003. Fructo-oligosaccharide intolerance inpatients with hereditary fructose ıntolerance: a preliminary nonrandomized open challenge short-term study. *Nutr Res* 23: 1003-1011.

Biadaioli, R., R. Bagna, P. Murru, P. Popolo, D. Rosatelli, and Pinna. 1998. An attempt to reduce premature ınfant ınfectıons in intensive care units by means of *Lactobacillus* GG. *Gastroenterol. Int.* 11, Suppl. 1: 136.

Briet F., L. Achour, B. Flourie, L. Beaugerie, P. Pellier, C. Franchisseur, F. Bornet, J.C. Rambaud. 1995. Symptomatıc response to varying levels of fructo-oligosaccharides consumed occasionally or regularly. *Eur J Clin Nutr* 49: 501-507.

Brouwer, M.L., S.A.A. Wolt-Plompen, A.E.J. Dubois, S. van der Heide, D.F. Jansen, M.A. Hoijer, H.F. Kauffman, and E.J. Duiverman. 2006. No effects of priobiotics on atopıc dermatitıs ın ınfancy: a randomized placebo-controlled trial. *Clin. Exper. Allergy* 36: 899-906.

Charteris, W.P., P.M. Kelly, L. Morelli, and J.K. Collins. 2001. Gradient diffusion antibiotic susceptibility testing of potentially probiotic lactobacilli. *J. Food Prot.* 64: 2007-2014.

Conway, P.L. Development of Intestinal Microbiota. 1996. In: Mackie, R.I., White, B.A., and Isaacson, R.E., eds. *Gastrointestinal Microbes and Host Interactions*, 2: 3-38.

Cummings, J.H. 1983. Fermentation in the human large intestine: evidence and implications for health. *Lancet* I: 1206-1209.

Dani, C., R. Biadaioli, G. Bertini, E. Martelli, and F.F. Rubaltelli. 2002. Probiotics feeding in prevention of urinary tract infection, bacterial sepsis and necrotizing enterocolitis in preterm infants. *Biol. Neonate* 82: 103-108.

Dong, M.Y., T.W. Chang, S.L. Gorbach. 1987. Effects of feeding *Lactobacillus* GG on lethal irradiation in mice. *Diagn. Microbiol. Infect. Dis.* 7: 1-7.

Donohue, D.C., S. Salminen. 1996. Safety of probiotic bacteria. *Asia Pacific J. Clin. Nutr.* 5: 25-28.

Donohue, D., M. Deighton, J.T. Ahokas, S. Salminens. 1993. Toxicity of Lactic acid bacteria. In Salminen S, von Wright A, (eds): Lactic Acid Bacteria: Marcel Dekker Inc., 307-313.

Edwards, C.A. and A.M. Parrett. 2002. Intestinal flora during the first months of life: new perspectives. *Brit. J. Nutr.* 88 (suppl 1): S11-18.

Elmadfa, I., C.O. Heinzle, D. Majchrzak, and H. Foissy. 2001. Influence of a probiotic yoghurt on the status of vitamins B1, B2, and B6 in the healthy adult human. *Ann. Nutr. Metabol.* 45: 13-18.

Elo, S., M. Saxelin and S. Salminen. 1991. Attachment of *Lactobacillus casei* strain GG to human colon carcinoma cell line Caco-2: comparison with other dairy strains. *Lett. Appl. Microbiol.* 13: 154-156.

FAO/WHO. 2002. Guidelines for the evaluation of probiotics in food: Report of a Joint FAO/WHO working group in drafting guidelines for the evaluation of probiotics in food, available at http://www.fao.org/es/ESN/food/foodandfood_probiocons_en.stm.

Gasser, F. 1994. Safety of lactic acid bacteria and their occurrence in human clinical infections. *Bull. Inst. Pasteur* 92: 45-67.

Goldin, B.R., S.L. Gorbach, M. Saxelın, S. Barakat, L. Gualtieri, and S. Salminen. 1992. Survival of *Lactobacıllus* species (strain GG) in human gastroıntestinal tract. *Dig. Dis. Sci.* 37(1): 121-128.

Gorbach, S.L. 1996. The discovery of *Lactobacillus* GG. *Nutrition Today* Suppl. 31; 6: 2S-4S.

Grönlund, M.M., O.P. Lehtonen, P. Kero, M. Saxelin, and S. Salminen. 1997. *Lactobacillus* GG supplementation does not reduce faecal colonızatıon of *Klebsiella oxytoca* in preterm infants. *Acta. Paediatr.* 86: 785-786.

Guandalını, S., L. Pensabene, M.A. Zikri, J.A. Dias, L.G. Casali, H. Hoekstra, S. Kolacek, K. Massar, D. Mıcetic-Turk, A. Papadopoulou, J.S. de Sousa, B. Sandhu, H. Szajewska, and Z. Weizman. 2000. *Lactobacillus* GG administered in oral rehydration solution to children with acute diarrhoea: A multicenter European trıal. *J. Pediatr. Gastroenterol. Nutr.* 30: 54-60.

Guarıno, A., R.B. Cananı, M. I. Spagnuolo, F. Albano, and L. Dı Benedetto. 1997. Oral bacterıal therapy reduces the duration of symptoms and of viral excretion in children wıth mild dıarrhea. *J. Pediatr. Gastroenterol. Nutr.* 25: 516-519.

Gupta, P., H. Andrew, B.S. Kirschrer, and S. Guandalıni. 2000. Is *Lactobacillus* GG helpful in Children with Crohn's disease? Results of an open label study. *J. Pediatr. Gastroenterol. Nutr.* 31: 453-457.

Harty, D.W.S., H.J. Oakey, M. Patrikakis, E.B.H. Hume, and K.W. Knox. 1994. Pathogenic potential of lactobacıllı. *Int. J. Food Microbiol.* 24: 179-189.

Harty, D.W.S., M. Patrikakis, and K.W. Knox. 1993a. Identification of *Lactobacillus* strains ısolated from patients with infective endocardıtıs and comparison of their surface-associated propertıes with those of other strains of the same species. *Microbiol. Ecol. Health Disease* 6: 191-201.

Harty, D.W.S., M. Patrikakis, E.B.H. Hume, H.J. Oakey, and K.W. Knox. 1993b. The aggregatıon of human platelets by *Lactobacillus* species. *J. Gen. Mıcrobıol.* 139: 2945-2951.

Hatakka, K., E. Savilahti, A. Pönkä, J.H. Meurman, T. Poussa, L. Nase, M. Saxelin, and R. Korpela. 2001. Effect of long term consumption of probiotıc milk on infections in children attending day care centres: double blind, randomised trial. *Br. Med. J.* 322: 1327-1329.

Heavey, P.M., and I. R. Rowland. 1999. The gut mıcroflora of the developing infant: Mıcrobiology and metabolism. *Microbial Ecol. Health Dis.* 11: 75-83.

Husni, R.N., S.M. Gordon, J.A. Washington, and D.L. Longworth. 1997. *Lactobacillus* bacteremia and endocarditis: review of 45 cases. *Clin. Infect. Dis.* 25: 1048-1055.

Isolauri, E., T. Arvola, E. Moilanen, and S. Salminen. 2000. Probiotics in the management of atopic eczema. *Clin. Experiment. Allergy* 30 (11): 1604-1610.

Isolauri, E. 1995. The treatment of cow's milk allergy. *European J Clinical Nutr.* 49 (Suppl 1): S49-S55.

Isolauri, E., J. Joensuu, H. Suomalainen, M. Luomala, and T. Vesikari. 1995. Improved immunogenicity of oral D x RRV reassortant rotavirus vaccine by *Lactobacillus* casei GG. *Vaccine* 13: 310-312.

Isolauri, E., M. Kaila., H. Mykkänen, W.H. Ling, and S. Salminen. 1994. Oral bacteriotheraphy for viral gastroenteritis. *Dig. Dis. Sci.* 39 (12): 2595-2600.

Kaila, M., E. Isolauri, M. Saxelin, H. Arvilommi, and T. Vesikari. 1995. Viable versus inactivated *Lactobacillus* strain GG in acute rotavirus diarrhoea. *Arch. Dis. Child.* 72: 51-53.

Kaila, M., E. Isolauri, E. Soppi, E. Virtanen, S. Laine, and H. Arvilommi. 1992. Enhancement of the circulating antibody secreting cell response in human diarrhea by a human *Lactobacillus* strain. *Pediatr. Res.* 32: 141-144.

Kalliomaki, M., S. Salminen, H. Arvilommi, P. Kero, P. Koskinen, and E. Isolauri. 2001. Probiotics in primary prevention of atopic disease: a randomised placebo-controlled trial. *Lancet* 357: 1076-1079.

Kankaanpaa, P, B Yang, H. Kallio, E. Isolauri, and S. Salminen. 2002. Influence of probiotic supplemented infant formula on composition of plasma lipids in atopic infants. *J. Nutr. Biochem.* 13: 364-369.

Kirjavainen, P., E.M. Tuomola, R.G. Crittenden, A.C. Ouwehand, D.W.S. Harty, L.F. Morris, H. Rautelin, M.J. Playne, D.C. Donohue, and S.J. Salminen. 1999. *In vitro* adhesion and platelet aggregation properties of bacteremia-associated lactobacilli. *Infect. Immun.* 67: 2652-2655.

Korpela, R., E. Moilanen, M. Saxelin, and H. Vapaatalo. 1997. *Lactobacillus* GG (ATCC 53103) and platelet aggregation *in vitro*. *Int. J. Food Microbiol.* 37: 83-86.

Kunz, A.N., J.M. Noel, and M.P. Fairchok. 2004. Two cases of *Lactobacillus* bacteria during probiotic treatment of short gut syndrome. *J. Ped. Gastroenterol. Nutr.* 38: 457-458.

Land, M.H., K. Rouster-Stevens, C.R. Woods, M.L. Cannon, J.Cnota, and A.K. Shetty. 2005. *Lactobacillus* sepsis associated with probiotic therapy. *Pediatrics* 115: 178-181.

Lee, D.J., R.A. Drongowski, A.G. Coran, and C.M. Harmon. 2000. Evaluation of probiotic treatment in a neonatal animal model. *Pediatr. Surg. Int.* 16: 237-242.

Mackay, A.D., M.B.N. Taylor, and C.C. Kibbler, J.M.T. Hamilton-Miller. 1999. *Lactobacillus* endocarditis caused by a probiotic organism. *Clin. Microbiol. Infect.* 5: 290-292.

Majamaa, H. and E. Isolauri. 1997. Probiotics: A novel approach in the management of food allergy. *J. Allergy Clin. Immunol.* 99: 179-185.

Majamaa, H., E. Isolauri, M. Saxelin, and T. Vesikari. 1995. Lactic acid bacteria in the treatment of acute rotavirus gastroenteritis. *J. Pediatr. Gastroent. Nutr.* 20: 333-338.

Marini, A., D. Clerici Bagozzi, T. Magilia, P. Casetta, and F. Negretti. 1997. Microbiological and immunological observations in the stools of preterm neonates orally treated with probiotic products. Note III: treatment with *Lactobacillus* GG. *Dev. Physiopath. and Clin.* 7: 87-94.

Mattar, A.F., R.A. Drongowski, A.G. Coran, and C.M. Harmon. 2001. Effect of probiotics on enterocyte bacterial translocation *in vitro*. *Pediatr. Surg. Int.* 7: 265-268.

Meurman, J.H., H. Antila, A. Korhonen, and S. Salminen. 1995. Effect of *Lactobacillus rhamnosus* strain GG (ATCC 53103) on the growth of *Streptococcus sobrinus in vitro*. *Eur. J. Oral Sci.* 103: 253-258.

Millar, M.R., C. Bacon, S.L. Smith, V. Walker, and M.A. Hall. 1993. Enteral feeding of premature infants with *Lactobacillus* GG. *Arch. Dis. Child.* 69: 483-487.

Naaber, P, S. Mikelsaar, S. Salminen, M. Mikelsaar. 1998. Bacterial translocation, intestinal microflora and morphological changes of intestinal mucosa in experimental models of *Clostridium difficile* infection. *J. Med. Microbiol.* 47: 1-8.

Nagler-Anderson, C. 2000. Tolerance and immunity in the intestinal system. *Crit. Rev. Immunol.* 20: 103-120.

Oakey, H.J., D.W.S. Harty and K.W. Knox. 1995. Enzyme production by lactobacilli and the potential link with infective endocarditis. *J. Appl. Bact.* 78: 142-148.

Oberhelman, R.A., R.H. Gilman, P. Sheen, D.N. Taylor, R.E. Black, L. Cabrera, A.G. Lescano, R. Meza, and G. Madico, G. 1999. A placebo-controlled trial of *Lactobacillus* GG to prevent diarrhea in undernourished Peruvian children. *J. Pediatr.* 134: 15-20.

O'Sullivan, M.A., and C.A. O'Morain. (2000) Bacterial supplementation in the irritable bowel syndrome. A randomized double-blind placebo-controlled crossover study. *Dig. Liver Dis.* 32: 294-301.

Ouwehand, A.C., E. Isolauri, P.V. Kirjavainen, and S.J. Salminen. 2000. The mucus binding of *Bifidobacterium lactis* Bb-12 is enhanced in the presence of *Lactobacillus* GG and *Lactobacillus delbruckii* subsp. *bulgaricus*. *Lett. Applied Microbiol.* 30: 10-13.

Pène, J., F. Rousset, F. Brière, I. Chrétien, X. Paliard, J. Banchereau, H. Spits, and J.E. De Vries. 1988. IgE production by normal human B cells induced by alloreactive T cell clones is mediated by IL-4 and suppressed by IFN-gamma. *J. Immunol.* 141: 1218-1224.

Pessi, T., Y. Sutas, A. Martinnen, E. Isolauri. 1998. Probiotics reinforce mucousal degradation of antigens in rats: Implications for therapeutic use of probiotics. *J. Nutr.* 128: 2313-2318.

Petschow, B., R. Figueroa, C. Harris, E. Ziegler, B. Goldin, J.R. Moran, and J. Vanderhoof. 2003. Comparison of intestinal colonization and tolerance following oral administration of *Lactobacillus rhamnosus* strain GG (LGG) in healthy infants. (ESPGHAN abstract, June).

Pohjavuori, E., M. Viljanen, R. Korpela, M. Kuitunen, M. Tittanen, O. Varala, and E. Savilahti. 2004. *Lactobacillus* GG effect in increasing IFN-γ production in infants with cow's milk allergy. *J. Allergy Clin. Immunol.* 114(1): 131-136.

Prescott, S.L., C. Maceubas, T. Smallacombe, B.J. Holt, P.D. Sly, and P.G. Holt. 1999. Development of allergen-specific T-cell memory in atopic and normal children. *Lancet* 353: 196-200.

Presterl, E., W. Kneifel, H.K. Mayer, W. Kneifel, H.K. Mayer, M. Zehetgruber, A. Makristathis, and W. Grainger. 2001. Endocarditis by *Lactobacillus rhamnosus* due to yogurt ingestion? *Scand. J. Infect. Dis.* 33: 710-714.

Rautio, M., H. Jousimies-Somer, H. Kauma, I. Pietarinen, M. Saxelin, S. Tynkkynen, and M. Koskela. 1999. Liver abscess due to *Lactobacillus rhamnosus* indistinguishable from *Lactobacillus* GG. *Clin. Infect. Dis.* 28: 1159-1160.

Raza, S., S.M. Graham, S.J. Allen, S. Sultana, L. Cuevas, and C.A. Hart. 1995. *Lactobacillus* GG promotes recovery from acute nonbloody diarrhea in Pakistan. *Pediatr. Infect. Dis. J.* 14: 107-111.

Rombeau, J.L. and S.A. Kripke. 1990. Metabolic and intestinal effects of short-chain fatty acids. *J. Parenteral Enteral Nutr.* 14 (suppl): 181S-185S.

Ruseler-van Embden, J., L. van Lieshout, M. Gosselink, and P. Marteau. 1995a. Inability of *Lactobacillus casei* strain GG, *L. acidophilus* and Bifidobacterium *bifidum* to degrade intestinal mucus glycoproteins. *Scand. J. Gastroenterol.* 30: 675-680.

Ruseler-van Embden, J., L. van Lieshout, and P. Marteau. 1995b. No degradation of intestinal mucus glycoproteins by *Lactobacillus* strain GG. *Microecol. Ther.* 25: 304-309.

Salazar-Lindo, E., P. Miranda-Langschwager, M. Campos-Sanchez, E. Chea-Woo, and R.B. Sack. 2004. *Lactobacillus casei* strain GG in the treatment of infants with acute watery diarrhea: A randomized, double-blind, placebo controlled clinical trial. *BMC Pediatrics* 4: 18.

Salminen, S.J. and D.C. Donohue. 1996. Safety assessment of *Lactobacillus* strain GG (ATCC 53103). *Nutrition Today* 31(6), Supplement 1: 12S-15S.

Salminen, M.K., S. Tynkkynen, H. Rautelin, M. Saxelin, M. Vaara, P. Ruutu, S. Sarna, V. Valtonen, and A. Järvinen. 2002. *Lactobacillus* bacteremia during a rapid increase in probiotic use of *Lactobacillus rhamnosus* GG in Finland. *Clin. Infect. Dis.* 35: 1155-1160.

Salminen, S. and A. von Wright. 1998. Current probiotics-safety assured? *Microbiol. Ecol. Health Dis.* 10: 68-77.

Salminen, S., A. von Wright, L. Morelli, P. Marteau, D. Brassart, W.M. De Vos, R. Fondén, M. Saxelin, K. Collins, G. Mogensen, S.E. Birkeland, and T. Mattila-Sandholm. 1998. Demonstration of safety of probiotics - a review. *Int. J. Food Microbiol.* 44: 93-106.

Sarem-Damerdji, L., F. Sarem, L. Marchal, and J.P. Nicholas. 1995. *In vitro* colonization ability of human colonic mucosa by exogenous *Lactobacillus* strains. *FEMS Microbiol. Lett.* 131: 133-137.

Saxelin, M, N.-H. Chuang, B. Chassy, H. Rautelin, P.H. Makela, S. Salminen, and S.L. Gorbach. 1996a. Lactobacilli and bacteremia in Southern Finland, 1989-1992. *Clin. Infect. Dis.* 22: 564-566.

Saxelin, M., H. Rautelin, S. Salminen, and P. Makela. 1996b. Safety of commercial products with viable *Lactobacillus* strains. *Infectious Diseases in Clinical Practice* 5: 331-335.

Saxelin, M., T. Pessi, and S. Salminen. 1995. Fecal recovery following oral administration of *Lactobacillus* strain GG (ATCC 53103) in gelatine capsules to healthy volunteers. *Int. J. Food Microb.* 25: 199-203

Saxelin, M., M. Ahokas, and S. Salminen. 1993. Dose response on the faecal colonisation of *Lactobacillus* strain GG administered in two different formulations. *Microb. Ecol. Health Dis.* 6: 119-122.

Saxelin, M., S. Elo, S. Salminen, and H. Vapaatalo. 1991. Dose response colonisation of faeces after oral administration of *Lactobacillus casei* strain GG. *Microb. Ecol. Health Dis.* 4: 209-214

Sepp, E., M. Mikelsaar, and S. Salminen. 1993. Effect of administration of *Lactobacillus casei* strain GG on the gastrointestinal microbiota of newborns. *Microb. Ecol. Health Dis.* 6: 309-314.

Shornikova, A.-V., E. Isolauri, L. Burkanova, S. Lukovnikova, and T. Vesikari. 1997. A trial in the Karelian Republic of oral rehydration and *Lactobacillus* GG for treatment of acute diarrhoea. *Acta Pædiatr.* 86: 460-465.

Silva, M., N.V. Jacobus, C. Deneke, and S.L. Gorbach. 1987. Antimicrobial substance from a human *Lactobacillus* strain. *Antimicrob. Agents Chemother.* 31: 1231-1233.

Siitonen, S, H. Vapaatalo, S. Salminen, N.A. Gordin, M. Saxelin, R. Wikberg, A.L. Kirkkola. 1990. Effect of *Lactobacillus* GG yoghurt in prevention of antibiotic associated diarrhoea. *Ann. Med.* 22: 57-59.

Stansbridge, E.M., V. Walker, M.A. Hall, S.L. Smith, M.R. Millar, C. Bacon, and S. Chen. 1993. Effects of feeding premature infants with *Lactobacillus* GG on gut fermentation. *Arch. Dis. Child.* 69: 488-492.

Szajewska, H., M. Kotowska, J.Z. Mrukowicz, M. Armanska, and W. Mikolajczyk. 2001. Efficacy of *Lactobacillus* GG in prevention of nosocomial diarrhea in infants. *J. Pediatr.* 138: 361-365.

Tynkkynen, S., K. Singh, and P. Varmanen. 1998. Vancomycin resistance factor in *Lactobacillus rhamnosus* GG in relation to enterococcal vancomycin resistance (van) genes. *Int. J. Food Microbiol.* 41: 195-204.

Vanderhoof, J.A., D.B. Whitney, D.L. Antonson, T.L. Hanner, J.V. Lupo, and R.J. Young. 1999. *Lactobacillus* GG in the prevention of antibiotic-associated diarrhea in children. *J. Pediatr.* 135: 564-568.

Vendt, N., H. Grünberg, T. Tuure, O. Malminiemi, E. Wuolijoki, V. Tillmann, E. Sepp, and R. Korpela. 2006. Growth during the first 6 months of life in infants using formula enriched with *Lactobacillus rhamnosus* GG: double blind, randomised trial. *J. Hum. Nutr. Dietet.,* 19: 51-58.

Viljanen, M., E. Savilahti, T. Haahtela, K. Juntunen-Backman, R. Korpela, T. Poussa, T. Tuure, and M. Kuitunen. 2005. Probiotics in the treatment of atopic eczema/dermatitis syndrome in infants: a double-blind placebo-controlled trial. *Allergy* 60: 494-500.

Wagner, R.D., C. Pierson, T. Warner, M. Dohnalek, J. Farmer, L. Roberts, and M. Hilty. 1997b. Biotherapeutic effects of probiotic bacteria on *Candidiasis* in immunodeficient mice. *Infect. Immun.* 65: 4165-4172.

Wagner, R.D., T. Warner, L. Roberts, J. Farmer, and E. Balish. 1997a. Colonization of congenitally immunodeficient mice with probiotic bacteria. *Infect. Immun.* 65: 3345-3351.

Zetterstrom, R., R. Bennet, and K.-E. Nord. 1994. Early infant feeding and micro-ecology of the gut. *Acta Paediatrica Japonica* 36: 562-571.

Zhou, J.S., P.K. Gopal, and H.S. Gill. 2001. Potential probiotic lactic acid bacteria *Lactobacillus rhamnosus* (HN001), *Lactobacillus acidophilus* (HN017), *and Bifidobacterium lactis* (HN019) do not degrade gastric mucin *in vitro*. *Int. J. Food Microbiol.* 22: 81-90.

XI. TABLES

Table 1: Summary of Clinical Studies on Healthy Subjects

Table 2: Summary of Clinical Studies on Compromised Subjects

TABLE 1: SUMMARY OF CLINICAL STUDIES ON HEALTHY SUBJECTS

Reference	Objective	Design	Description of Subjects Treated with LGG; Age at Entry	Daily Dose and Delivery of LGG	Duration	Conclusion	Safety-Related Issues
Adults							
Saxelin *et al* (1991)	Intestinal "colonization" of LGG	Dose response feeding study	~40 LGG treated healthy subjects of ages 18-55 yrs	1 5 x 10^{6} – 1 1 x 10^{11} cfu as freeze-dried powder	7 days	No LGG was detected in the feces of the subjects in the 10^{6}-10^{8} dosing groups, while all subjects in the 10^{10}-10^{11} dosing groups showed fecal colonization	No safety-related endpoints discussed, no specific adverse events reported
Goldin *et al* (1992)	Intestinal "colonization" of LGG	Dose response feeding study	76 LGG treated healthy subjects of ages 21-55 yrs	4 x 10^{10} cfu as a frozen concentrate, 3 6 x 10^{11} cfu in fermented milk; or 1 6 x 10^{11} cfu in a fermented whey drink	28 days (frozen concentrate), 7 days (fermented milk); or 35 days (fermented whey drink)	LGG was recovered in the feces of all subjects receiving the fermented milk or whey and in 86 percent of those receiving the frozen concentrate. "These studies demonstrate that *Lactobacillus* GG can survive and temporarily colonize the human gastrointestinal tract and can affect the metabolic activity of the resident microflora "	No safety-related endpoints discussed, no specific adverse events reported
Saxelin *et al* (1993)	Intestinal "colonization" of LGG	Dose response feeding study	44 LGG treated healthy adults of ages 20-55 yrs	1-8 x 10^{9} cfu in enterocoated tablets or fermented milk with 2 1 x 10^{9} or 1 2 x 10^{10} cfu	7 days	LGG was found in the feces of all subjects by test day 3 "The results indicate that fermented milk and enterocoated tablets are good carriers for administering *Lactobacillus* GG as a probiotic organism "	No safety-related endpoints discussed, no specific adverse events reported

TABLE 1: SUMMARY OF CLINICAL STUDIES ON HEALTHY SUBJECTS

Reference	Objective	Design	Description of Subjects Treated with LGG; Age at Entry	Daily Dose and Delivery of LGG	Duration	Conclusion	Safety-Related Issues
Term Infants							
Sepp *et al.* (1998)	Intestinal "colonization" of LGG and effect on gastrointestinal microbiota	Placebo controlled	15 LGG treated subjects (of 25 total newborns)	10^{10}-10^{11} cfu/g freeze-dried powder in ~5 mL of water	14 days	"The study shows that 2 wk administration of *Lactobacillus* GG, which starts right after birth, increases intestinal lactobacilli concentrations and does not impair the establishment of normal fecal microbiota."	No safety-related endpoints discussed; no specific adverse events reported
Petschow *et al.* (2003)	Intestinal "colonization" and tolerance of LGG	Placebo controlled	37 LGG treated subjects (of 49 total of ages 0-3 mos)	10^{8}-10^{10} cfu in hydrolyzed casein-based formula (Nutramigen®LGG)	14 days	"Feeding LGG at 10^{8} – 10^{10} cfu per day was well tolerated and led to transient colonization in healthy term infants. LGG colonization was apparently not related to level of LGG administered and tended to decrease 2 weeks after feeding supplemented formula."	No safety-related endpoints discussed; no specific adverse events reported. "Stool consistency, flatulence, and fussiness were similar among all groups."

TABLE 1: SUMMARY OF CLINICAL STUDIES ON HEALTHY SUBJECTS

Reference	Objective	Design	Description of Subjects Treated with LGG; Age at Entry	Daily Dose and Delivery of LGG	Duration	Conclusion	Safety-Related Issues
Children							
Hatakka *et al* (2001)	Prevention of common infections in day care centers	Randomized, double blind, placebo controlled	282 LGG treated subjects of ages 1-6 yrs, mean = 4 6 yrs	Mean of ~1 3 – 2 6 x 10^8 cfu in 1% milk	5 days/week for 7 months	"*Lactobacillus* GG may reduce respiratory infections and their severity among children in day care The effects of the *Lactobacillus* GG were modest but consistently in the same direction "	No differences in adverse events – listed as of stool frequency or consistency, abdominal pain, allergic symptoms, or side effects – between the LGG treatment group and the controls were reported
Arvola *et al* (1999)	Prevention of antibiotic-associated diarrhea	Randomized, double blind, placebo controlled	61 LGG treated subjects (of 119 total of ages 2 wks – 12 yrs, mean = 4 5 yrs)	2 x 10^{10} cfu in capsules, twice daily	7-10 days	" *Lactobacillus* GG is effective in the prevention of diarrhea in children receiving antimicrobial treatment to respiratory infections "	"The parents reported no adverse effects of *Lactobacillus* GG or placebo "
Vanderhoof *et al* (1999)	Prevention of antibiotic-associated diarrhea	Randomized, double blind, placebo controlled	93 LGG treated subjects of mean age = 3 9 yrs (of 188 total of ages 6 mos – 10 yrs)	1-2 x 10^{10} cfu in capsule form (or) with meal	10 days	"*Lactobacillus GG* reduces the incidence of antibiotic-associated diarrhea in children treated with oral antibiotics for common childhood infections "	"There were no failures [to complete the study] resulting from untoward effects of either LGG or placebo " No adverse events were reported by the authors

TABLE 1: SUMMARY OF CLINICAL STUDIES ON HEALTHY SUBJECTS							
Reference	**Objective**	**Design**	**Description of Subjects Treated with LGG; Age at Entry**	**Daily Dose and Delivery of LGG**	**Duration**	**Conclusion**	**Safety-Related Issues**
Term Infants							
Sepp *et al* (1993)	Intestinal "colonization" of LGG and effect on gastrointestinal microbiota	Placebo controlled	15 LGG treated subjects (of 25 total newborns)	10^{10}-10^{11} cfu/g freeze-dried powder in ~5 mL of water	14 days	"The study shows that 2 wk administration of *Lactobacillus* GG, which starts right after birth, increases intestinal lactobacilli concentrations and does not impair the establishment of normal fecal microbiota "	No safety-related endpoints discussed, no specific adverse events reported
Petschow *et al* (2003)	Intestinal "colonization" and tolerance of LGG	Placebo controlled	37 LGG treated subjects (of 49 total of ages 0-3 mos)	10^{8}-10^{10} cfu in hydrolyzed casein-based formula (Nutramigen®)	14 days	"Feeding LGG at 10^{8} – 10^{10} cfu per day was well tolerated and led to transient colonization in healthy term infants. LGG colonization was apparently not related to level of LGG administered and tended to decrease 2 weeks after feeding supplemented formula "	No safety-related endpoints discussed, no specific adverse events reported. "Stool consistency, flatulence, and fussiness were similar among all groups "

\\\DC - 087097/000006 2360895 v1

0001144

TABLE 1: SUMMARY OF CLINICAL STUDIES ON HEALTHY SUBJECTS

Reference	Objective	Design	Description of Subjects Treated with LGG; Age at Entry	Daily Dose and Delivery of LGG	Duration	Conclusion	Safety-Related Issues
Vendt *et al* (2006)	Effect of LGG on growth indexes and fecal biota	Randomized, double blind, placebo controlled	60 LGG treated subjects of ages 0-2 months, mean = 37 4 days	~10^9 cfu in cow's milk-based formula	To age 6 months	Infants receiving LGG showed greater increases in length and weight at the end of study compared to infants receiving regular formula "The administration of LGG-enriched formula increased colonization frequency with lactobacilli in general. LGG, although present in 75% of the samples in the LGG group, did not generally dominate the lactobacilli flora "	No safety-related endpoints discussed, no specific adverse events reported "The LGG-enriched formula was well-tolerated . "
Preterm Infants							
Millar *et al* (1993)	Intestinal "colonization" of LGG and effect on gastrointestinal microbiota and clinical outcome	Randomized, double blind, placebo controlled	10 LGG treated neonates of gestational age 26-33 wks, median = 30 5 wks	10^8 cfu in milk feedings, twice daily	14 days	LGG was found in the feces of nine of the 10 treated infants. Although concentrations declined over time, four of the seven infants for whom fecal sample were available three weeks after LGG administration ended still exhibited LGG in the feces.	No adverse effects related to LGG were reported "Orally administered *Lactobacillus GG* was well tolerated and did colonise the bowel of premature infants " "There were no episodes of infection attributable to *Lactobacillus GG* "

\\\DC - 087097/000006 - 2360895 v1

000145

TABLE 1: SUMMARY OF CLINICAL STUDIES ON HEALTHY SUBJECTS							
Reference	**Objective**	**Design**	**Description of Subjects Treated with LGG; Age at Entry**	**Daily Dose and Delivery of LGG**	**Duration**	**Conclusion**	**Safety-Related Issues**
Gronlund *et al* (1997)	Reduction of fecal colonization of *Klebsiella oxytoca*	Treatment study	30 neonates in the NICU and an unspecified number of neonates entering the NICU received LGG (gestational ages not specified)	2 5 x 10^8 cfu, twice daily	≤14 days, mean = 7 8 days	"No new clinical infections caused by *K oxytoca* were found . ," and there were no reports of any infections caused by LGG "No evident decrease of the colonization rate of *K. oxytoca* of the treated infants could be observed after *Lactobacillus* GG supplementation "	No safety-related endpoints discussed, no specific adverse events reported
Marini *et al* (1997)	Intestinal "colonization" of LGG and impact on fecal microflora	Feeding study, placebo controlled	10 LGG treated neonates (gestational ages not specified)	10^9 cfu in a "probiotic human drug"	15 days	Fecal LGG was found in all treated infants, with a peak level of cfu/g of feces found, on average, after five days of LGG administration Significant decreases in the ratio of aerobic to anaerobic microorganisms in the feces of treated infants relative to controls also were observed over the administration period	No safety-related endpoints discussed, no specific adverse events reported

\\\DC - 087097/000006 - 2360893 v4

000146

TABLE 1: SUMMARY OF CLINICAL STUDIES ON HEALTHY SUBJECTS							
Reference	**Objective**	**Design**	**Description of Subjects Treated with LGG; Age at Entry**	**Daily Dose and Delivery of LGG**	**Duration**	**Conclusion**	**Safety-Related Issues**
Agarwal *et al.* (2003)	Intestinal "colonization" of LGG and impact on fecal microflora	Randomized, placebo controlled	47 LGG treated neonates (24 with birth weights less than 1500 g, 23 with birth weights 1500-1999 g) (gestational ages not specified)	10^9 cfu in breast milk, twice daily	21 days for neonates <1500 g, 8 days for neonates 1500-1999 g	Transient colonization was observed in 21% of test infants weighing <1500 g and in 47% of test infants weighing 1500-1999 g. "Although LGG is a relatively poor colonizer in infants, especially those infants weighing less than 1500 g at birth, it does appear to affect neonatal intestinal colonization patterns "	"No side effects were observed in babies either fed with or colonized by LGG " "LGG was well tolerated in all infants "
Biadaioli *et al.* (1998)	Reduction of enteric infections in neonates receiving antibiotics	Double blind, placebo controlled	119 LGG treated neonates of gestational age <33 wks of gestation and/or <1500 g birth weight	10^9 cfu in usual food supply by enteral feeding	Average of 49 7 days	No difference in the incidence of infection was found between the treatment and control groups	"[T]here were no negative clinical effects of a relevant nature to be reported "
Dani *et al* (2002)	Prevention of common infections in NICU setting	Randomized, double blind, placebo controlled	295 LGG treated neonates of gestational age <33 wks or <1500 g birth weight	6 x 10^9 cfu in milk	Mean of 47 3 days	There were lower incidences of UTI and NEC relative to controls but no difference in bacterial sepsis	No safety-related endpoints discussed, no specific adverse events reported

\\\DC - 087097/000006 2360895 v4

000147

TABLE 1: SUMMARY OF CLINICAL STUDIES ON HEALTHY SUBJECTS							
Reference	**Objective**	**Design**	**Description of Subjects Treated with LGG; Age at Entry**	**Daily Dose and Delivery of LGG**	**Duration**	**Conclusion**	**Safety-Related Issues**
Stansbridge *et al.* (1993)	Effect of LGG on gut fermentation	Randomized, , double blind, placebo controlled	10 LGG treated neonates of gestational age ≤33 wks	10^8 cfu in standard milk feeds, twice daily	14 days	"Colonization with *Lactobacillus GG* had little impact on faecal SCFAs and, it may be assumed, enteric production of these nutritionally important compounds . The small increase in ethanol secretion is unlikely to have clinical significance "	"Clinically, there were no adverse effects "

TABLE 2: SUMMARY OF CLINICAL STUDIES ON COMPROMISED SUBJECTS							
Reference	**Objective**	**Design**	**Description of Subjects Treated with LGG; Age at Entry**	**Daily Dose and Delivery of LGG**	**Duration**	**Conclusion**	**Safety-Related Issues**
Term Infants and Children							
Kaila *et al* (1992)	Effect of LGG on recovery from acute rotavirus diarrhea	Unblinded feeding study	22 "well-nourished" LGG treated subjects (of 39 total of ages 7-37 mos, mean = 16 mos)	10^{10-11} cfu in 125 g fermented milk product, twice daily	5 days	" LGG promotes recovery from rotavirus diarrhea via augmentation of the local immune defense "	No safety-related endpoints discussed, no specific adverse effects reported
Isolauri *et al* (1994)	Effect of LGG on recovery from acute diarrhea	Randomized, placebo controlled	21 "well-nourished" LGG treated subjects, mean age = 13 6 mos (of 42 total of ages 5-28 mos)	10^{10} cfu in a freeze-dried powder, twice daily	5 days	LGG reduced the duration of diarrhea	No safety-related endpoints discussed, no specific adverse effects reported
Raza *et al* (1995)	Effect of LGG treatment of acute, non-bloody diarrhea	Triple-blind, placebo controlled	21 "undernourished" LGG treated subjects (of 42 total of ages 1-40 months, mean = 13 mos)	10^{10-11} cfu mixed in 10 mL ORS, twice daily	2 days	LGG reduced the occurrence of non-bloody diarrhea at 48 hrs	No safety-related endpoints discussed, no specific adverse effects reported "LGG was well tolerated "
Majamaa *et al* (1995)	Effect of LGG on immune response to acute rotavirus gastroenteritis	Randomized, double-blind, (small non-treatment group)	16 LGG treated subjects (of 49 total of ages 6-35 mos)	6 25 x 10^{9} cfu in 5 mL of water given with food or via a nasogastric tube, twice daily	5 days	" .LGG promotes clinical recovery from acute gastroenteritis and potentiates gut immune response to rotavirus "	No safety-related endpoints discussed; no specific adverse effects reported

0001149

TABLE 2: SUMMARY OF CLINICAL STUDIES ON COMPROMISED SUBJECTS

Reference	Objective	Design	Description of Subjects Treated with LGG; Age at Entry	Daily Dose and Delivery of LGG	Duration	Conclusion	Safety-Related Issues
Kaila *et al* (1995)	Effect of viable/ heat inactivated LGG on the immune response to acute rotavirus diarrhea	Randomized, double-blind	41 "well-nourished" subjects of ages 1-38 mos, mean = 13 mos; 20 received viable LGG, 21 received heat inactivated LGG	10^{10-11} cfu in ~5 mL of water, twice daily	5 days	" Clinical recovery from rotavirus diarrhea was equal in the two groups receiving viable or heat inactivated *L casei* strain GG during the diarrhoea "	No safety-related endpoints discussed, no specific adverse effects reported
Shornikova *et al* (1997)	Effect of LGG on recovery from acute diarrhea	Randomized, double-blinded, placebo controlled	59 LGG treated subjects (of 123 total of ages 1-36 mos)	5 x 10^9 cfu in ORS or food, twice daily	5 days	Subjects receiving LGG had a shorter mean duration of diarrhea relative to controls	No safety-related endpoints discussed, no specific adverse effects reported "LGG was administered without difficulties . "
Guarino *et al* (1997)	Effect of LGG on duration of diarrhea	Randomized, placebo controlled	52 LGG treated subjects (of 100 total of ages 3-26 mos)	3 x 10^9 cfu in 200 mL of milk or formula, twice daily	≤5 days	Diarrheal duration was reduced by approximately 50% in children receiving LGG compared with controls	No safety-related endpoints discussed, no specific adverse effects reported
Guandalini *et al* (2000)	Effect of LGG on acute diarrhea	Randomized, double-blind, placebo controlled	147 LGG treated subjects (of 294 total of ages 1-36 mos	Approx 10^{10} cfu in ORS	Unspecified, but assumed to be 1-3 days	Duration of diarrhea was reduced in LGG-treated subjects with rotavirus relative to controls	No safety-related endpoints discussed; no specific adverse effects reported
Salazar-Lindo *et al.* (2004)	Effect of LGG on duration and severity of non-rotaviral acute diarrhea	Randomized, placebo controlled	90 LGG treated subjects (of 179 total males of ages 3-36 mos)	6-8 x 10^{11} cfu in milk formula	≤5 days	"[T]his study did not show a positive effect of LGG on the clinical course of acute watery diarrhea."	"No adverse effects due to the study formula were notice[d] in either group during the study "

\\\DC 087097/000006 2360895 v1

000150

TABLE 2: SUMMARY OF CLINICAL STUDIES ON COMPROMISED SUBJECTS

Reference	Objective	Design	Description of Subjects Treated with LGG; Age at Entry	Daily Dose and Delivery of LGG	Duration	Conclusion	Safety-Related Issues
Oberhelman *et al* (1999)	Ability of LGG to prevent diarrhea	Randomized, double-blind, placebo controlled	99 "undernourished" LGG treated subjects of ages 6-24 mos; mean = 14.76 mos	3 7 x 10^{10} cfu in flavored gelatin	6 days/wk for up to 15 mos	While the incidence of diarrhea was lower in the LGG-treated group, no difference in duration of diarrhea was observed	No safety-related endpoints discussed, no specific adverse effects reported
Szajewska, *et al* (2001)	Efficacy of LGG in the prevention of nosocomial diarrhea	Randomized, double-blind, placebo controlled	45 LGG treated subjects, mean age = 11 6 mos (of 81 total of ages 1-36 mos)	6 x 10^{9} cfu in small amount of water with feedings, twice daily	Duration of hospital stay	Those subjects who received LGG had a reduced incidence of nosocomial diarrhea relative to controls	"LGG was well tolerated, and no adverse effects of the treatment were noted "
Majamaa and Isolauri (1997)	Effect of LGG on CMA	Randomized, double-blind, placebo controlled	13 LGG treated subjects (of 27 total of ages 2 5-15.7 mos)	5 x 10^{8} cfu/g extensively hydrolyzed whey formula	1 month	The clinical score of atopic dermatitis was less in the LGG group relative to controls at the end of the treatment period	No safety-related endpoints discussed, no specific adverse effects reported
Isolauri *et al* (2000)	Effect of LGG (or Bb-12) on atopic eczema	Randomized, double-blind, placebo controlled	9 LGG treated subjects (of 27 total, mean age = 4 6 mos)	3-8 x 10^{10} cfu in extensively hydrolyzed whey formula	≥6 months	After two months, an improvement in skin condition was seen in the LGG and Bb-12 treatment groups relative to controls	No safety-related endpoints discussed, no specific adverse effects reported

\\\DC - 087097/000006 - 2360895 v4

000151

TABLE 2: SUMMARY OF CLINICAL STUDIES ON COMPROMISED SUBJECTS

Reference	Objective	Design	Description of Subjects Treated with LGG; Age at Entry	Daily Dose and Delivery of LGG	Duration	Conclusion	Safety-Related Issues
Kalliomaki *et al* (2001)	Effect of LGG on atopic diseases	Randomized, double-blind, placebo controlled	77 LGG treated infants (of 159 total, mothers treated 2-4 wks prenatally, either mother or infant treated from birth)	10^{10} cfu by capsule (mothers) or with water (infants)	6 months	The frequency of atopic eczema in the LGG group was half that of controls, although mean SCORAD scores of those with atopic eczema were similar "*Lactobacillus* GG was effective in prevention of early atopic disease in children at high risk"	No safety-related endpoints discussed; no specific adverse effects reported
Kankaanpaa *et al* (2002)	Effect of LGG (or Bb-12) on plasma lipids in atopic infants	Randomized, double-blind, placebo controlled	5 LGG treated subjects; mean age = 4 5 mos (of 15 total)	3 x 10^8 cfu/g extensively hydrolyzed formula	Mean of 4 4 months	"[T]he use of probiotic supplemented infant formula resulted in altered plasma lipid PUFA composition compared to regular, non-supplemented formula"	No safety-related endpoints discussed; no specific adverse effects reported "All formulas were well tolerated in these infants"
Pohjavuori *et al* (2004)	Effect of LGG alone (or in combination with 3 other bacterial species) on CMA	Randomized, double-blind, placebo controlled	83 LGG treated subjects (42 LGG-only and 41 LGG/mix) (of 119 total of ages 1 4-11 5 mos, mean = 6 5 mos)	5 x 10^9 cfu in food or extensively hydrolyzed whey formula, twice daily	4 weeks	"LGG raises IFN-γ production of PBMC in infants with CMA and in infants with IgE-associated dermatitis and may thus provide beneficial T_H1 immunomodulatory signals"	No safety-related endpoints discussed, no specific adverse effects reported

\\\DC 087097/000006 2360895 v4

000152

TABLE 2: SUMMARY OF CLINICAL STUDIES ON COMPROMISED SUBJECTS							
Reference	**Objective**	**Design**	**Description of Subjects Treated with LGG; Age at Entry**	**Daily Dose and Delivery of LGG**	**Duration**	**Conclusion**	**Safety-Related Issues**
Viljanen *et al* (2005)	Effect of LGG alone (or in combination with 3 other bacterial species) on CMA	Randomized, double-blind, placebo controlled	156 LGG treated subjects (80 LGG-only and 76 LGG/mix) (of 230 total of ages 1 4-11 9 mos, mean = 6 4 mos)	5 x 10^9 cfu in food or extensively hydrolyzed whey formula, twice daily	4 weeks	"Treatment with LGG may alleviate AEDS symptoms in IgE-sensitized infants but not in non-IgE sensitized infants "	No safety-related endpoints discussed, no specific adverse effects reported
Brouwer *et al* (2006)	Effect of LGG (or *L. rhamnosus*) on atopic disease	Randomized, double-blind, placebo controlled	16 LGG treated subjects of ages 1 6-5 2 mos, mean = 3 8 mos (of 50 total)	~5 x 10^9 cfu per 100 mL of hydrolysed whey-based formula	3 months	"Our results indicate that oral supplementation with these probiotic bacterial strains will not have a significant impact on the symptoms of infantile [atopic dermatitis] "	No safety-related endpoints discussed, no specific adverse effects reported

\\\DC - 087097/000006 2360895 v4

000153

XII. APPENDICES

A. Cell Banking System for LGG

B. Manufacturing Process for LGG

C. Certificates of Analysis for LGG

D. Analytical Method for LGG

E. Genetic Stability Testing of LGG by PFGE

F. Partial List of Products Containing LGG Sold Worldwide

Appendix A:

Cell Banking System for LGG

ANNEX 5.5.1 Manufacturer Cell bank system

Valio Ltd
R&D
T.Suomalainen
20.2.2002

Cell Bank System of LGG

Valio Ltd. is maintaining a cell bank system of its own. The system is divided into "long term storage", "intermediate term storage" and "short term storage" according to Kursop & Snell: Maintenance of Microorganisms, American Press, 1984.

MASTER CELL BANK

- **Long term storage at –40°C for ten years.**

LGG cells are freeze dried with a cryoprotectant in a vacuum system and packed in glass ampoules. Process is described in details in a document " Preparation of long term storage ampoules". Every 10 year a culture is renewed and checked for microbiological purity and for carbohydrate metabolic pattern (API 50CHL, bioMerieux) and for genetic pattern (Pulsed Field Gel Electrophoresis; PFGE-profile). Results are registered into a QC-book. After checking new ampoules for long term storage are prepared.

Once in five years the culture (an ampoule) is regenerated twice in M.R.S. broth at 37°C for 17 – 18 hours. Identity is checked by carbohydrate metabolic pattern (API 50 CHL) and by genetic pattern (PFGE-profile). Cell are concentrated 10 to 15 fold with centrifugation at 5 000 rpm. For preparation of the intermediate storage ampoules the cells are suspended in 1-10 ml of sterile M.R.S. supplemented with 15% of glycerol( ). One ml of the suspension is transferred into sterile cryotubes (polypropene) and stored at –80°C.

- **Intermediate term storage at –80°C for five years**

LGG cell frozen in M.R.S (15% glycerol) packed in 10 to 20 cryo-tubes. Eah time a new cryo-tube is used and then discarded.

Once in two years the frozen concentrate is regenerated twice in M.R.S. broth at 37°C for 17 – 18 hours. Identity is checked by carbonhydrate metabolic pattern (API 50 CHL) and cell morphology using a microscopic method. Purity is checked by plating on sugar free agar (SF). For preparation of short term storage ampoules the cells are concentrated 10 to 15 fold with centrifugation at 5 000 rpm. 1-5 ml of sterile M.R.S. supplemented with 15% of glycerol is added on cell concentrate and mixed well. 0.1 ml of the suspension is transferred into sterile polypropene ampoules and stored at –80°C.

WORKING CELL BANK

- **Short term storage at –80°C for two years**

LGG cells frozen in MRS(15% glycerol) packed 10 to 15 cryotubes. Each time an inoculum for LGG(P) production is prepared one cryotube is used. Cells are identified microscopically by cell morphology and checked for microbiological purity by plating on Sugar Free agar (SF).

Summary

Every 5th year (Freeze dried ampoule at –40°C)
- API 50 CHL: carbohydrate pattern

\\\DC - 087097/000006 - 2360895 v4

- Pulsed Field Gel Electrophoresis (PFGE): genetic pattern
- Microbiological Purity (Sugar Free Agar, SF)
- Preparation of Intermediate Term Storage ampoules

Once in two years (every second year)
- API 50 CHL pattern
- Morphology by Microscopic method
- Microbiological Purity by plating on SF-agar
- Preparation of short term storage ampoules

Appendix B:

Manufacturing Process for LGG

Appendix B: Manufacturing Process for LGG

Lactobacillus GG – Valio Ltd.
LGG grade P
Freeze dried powder

Production flow chart (Appendix 1)

PROCESS DESCRIPTION

Inocula

1st Inoculum to prepare 2nd Inoculum

- Medium preparation M.R.S. (Oxoid)
- Inoculum 1%

2nd Inoculum for use of manufacturing process

- Medium preparation Hydrolysis of whey permeate and whey proteins
- Medium sterilization 120±1°C/22min. 120±10 rpm
- Inoculum 1%(v/v)
- Fermentation process 18±1 h
- Cooling cell suspensio<15°C

Production fermentation

- Medium preparation hydrolysis of whey permeate and whey proteins
- Sterilisation: 120±1°C/22min. 120±10 rpm
- Inoculum 3.4%(v/v)
- Fermentation process 18±1 h with pH control with ammonium hydroxide
- Cooling cell suspension<15°C
- Foam prevention: Structol J673: sterilized 120°C/30 min prior to use

Concentration by utrafiltration (UF)

- pH: adjusted
- Washing Concentrate is washed with sterile water (about 1000) Begins when 500 kg of concentrate is left.
- Concentration factor 13-16
- Protective colloid Addition of cryoprotectant (46% saccharose at purified water sterilized 110°C for 10 min.)

Freeze drying, handling of end product and storage

- Drying on trays in a freeze dryer (trays are sterilized (120±1°C/22min) prior to use)
- Handling: Room humidity<30%
  Milling immediately after drying
- Packaging Packaging into plastic containers or aluminum foliobags
- Storage: at <-20°C

PRODUCTION FLOW CHART

LGG freeze dried powder

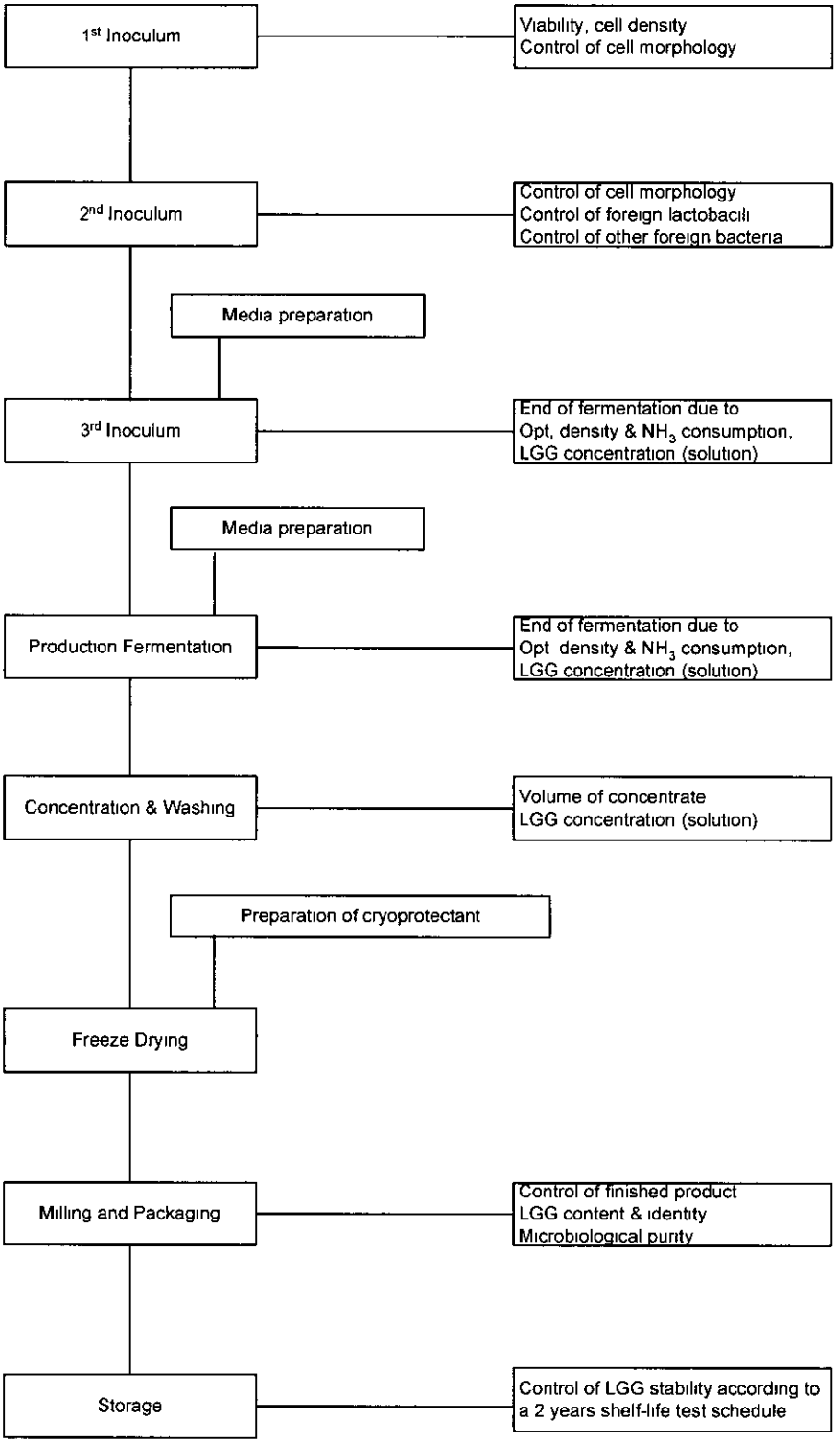

Appendix C:

Certificates of Analysis for LGG

VALIO	Unit R&D 01	Operation Production of Starter Cultures	Level III	Code TEA 01.552 045100MJD

Revision	Page	Draft	Accepted	Date
3	1 (1)	Timo Hietala	Hannikainen Jaakko	7.10.2003

Name
Lot specific analysis certificate for Mead Johnson

LACTOBACILLUS RHAMNOSUS GG - "Grade P"

Concentrated, freeze-dried bacterial powder

Batch number B41124 Manufacturer Valio Best Before 24.11.2006

LGG counts

	Lot	Specification cfu/g
Lactobacillus GG	4.8×10^{11}	$\geq 3 \times 10^{11}$

Hygienic Quality

	Lot	Specification cfu/g
Total viable aerobic count (non lactic bacteria)	<10	$<10^3$
Yeasts	<10	<100
Molds	<10	<100
Enterobacteriaceae and other Gram neg.	0/g	0/ g
Clostridial spores*	<3	<3*
Staphylococcus aureus *	<10	<10*
E.coli	0/g	0/g
Salmonella	0/25 g	0 /25 g
Pseudomonas aeruginosa*	<10	<10*
Aerobic bacterial spores (30 °)	<10	<100
**Bacillus cereus*	<10	<100

*absent within detection limit <10 cfu/g; Clostridial spores <3MPN
** If aerobic bacterial spores absent (<10 cfu/g), not tested separately

Chemical and physical parameters

Water activity (% RH)	1.3	< 10%	(ie A_w <0,1)
Saccharose (%)	48,2	25-55%	
Lactose (%)	0,19	<1%	
β–lactoglobulin	<0,03	<0,1 ug/g	

Acceptance
Released

4 1.2005
Timo Hietala

Note: Stability after 1 month at +37C 6,7E11 cfu/g

We hereby declare that the starter cultures produced at Valio Ltd, R&D Production of Starter Cultures, including *Lactobacillus rhamnosus* GG Grade P, have not been genetically modified, nor do they contain GMO-containing raw materials or additives.

Valio Ltd R&D Production of Starter Cultures
PO Box 90 FIN-00039 VALIO FINLAND
Haidenhofintie 4 01300 Vantaa Finland
Telephone +358 10381 121
Telefax +358 10 381 2910
VAT No. FI01162979
Trade Reg. No. 17.644
Reg Domicile Helsinki

VALIO	Unit R&D 01	Operation Production of Starter Cultures	Level III	Code TEA 01.552.045100MJD

Revision	Page	Draft	Accepted	Date
3	1 (1)	Timo Hietala	Hannikainen Jaakko	7.10.2003

Name
Lot specific analysis certificate for Mead Johnson

LACTOBACILLUS RHAMNOSUS GG - "Grade P"

Concentrated, freeze-dried bacterial powder

Batch number B31022 Manufacturer Valio Best Before: 22.10.2005

LGG counts

	Lot	Specification cfu/g
Lactobacillus GG	$5{,}6 \times 10^{11}$	$\geq 3 \times 10^{11}$

Hygienic Quality

	Lot	Specification cfu/g
Total viable aerobic count (non lactic bacteria)	<10	<10[3]
Yeasts	<10	<100
Molds	<10	<100
Enterobacteriaceae and other Gram neg.	0	0/ g
Clostridial spores*	<3	<3*
Staphylococcus aureus *	<10	<10*
E.coli	0	0/g
Salmonella	<10	0 /25 g
Pseudomonas aeruginosa*	<10	<10*
Aerobic bacterial spores (30 °)	<10	<100
**Bacillus cereus*	<10	<100

*absent within detection limit <10 cfu/g; Clostridial spores <3MPN
** If aerobic bacterial spores absent (<10 cfu/g), not tested separately

Chemical and physical parameters

Water activity (% RH)	0,1	< 10%	(ie. A_w <0,1)
Saccharose (%)	51,9	25-55%	
Lactose (%)	<0,1	<1%	
β-lactoglobulin	<0,03	<0,1 ug/g	

Acceptance
Released

17.11.2003
Timo Hietala

We hereby declare that the starter cultures produced at Valio Ltd, R&D Production of Starter Cultures, including *Lactobacillus rhamnosus* GG Grade P, have not been genetically modified, nor do they contain GMO-containing raw materials or additives.

Valio Ltd R&D Production of Starter Cultures
PO Box 80 FIN-00038 VALIO FINLAND
Haldenhofintie 4 01300 Vantaa Finland
Telephone +358 10381 121
Telefax +358 10 381 2910
VAT No. FI01162976
Trade Reg. No. 17 644
Reg. Domicile Helsinki

Unit	Operation	Level	Code
R&D 01	Production of Starter Cultures	III	TEA 01.552.045100MJD

Revision	Page	Draft	Accepted	Date
3	1 (1)	Timo Hietala	Hannikainen Jaakko	7.10.2003

Name
Lot specific analysis certificate for Mead Johnson

LACTOBACILLUS RHAMNOSUS GG - "Grade P"

Concentrated, freeze-dried bacterial powder

Batch number B50116 Manufacturer Valio Best Before. 16.1.2007

LGG counts

	Lot	Specification cfu/g
Lactobacillus GG	$7{,}6 \times 10^{11}$	$\geq 3 \times 10^{11}$

Hygienic Quality

	Lot	Specification cfu/g
Total viable aerobic count (non lactic bacteria)	<10	$<10^{4}$
Yeasts	<10	<100
Molds	<10	<100
Enterobacteriaceae and other Gram neg.	0/g	0/ g
Clostridial spores*	<3	<3*
Staphylococcus aureus *	<10	<10*
E.coli	0/g	0/g
Salmonella	0/25 g	0 /25 g
Pseudomonas aeruginosa*	<10	<10*
Aerobic bacterial spores (30 °)	<10	<100
**Bacillus cereus	<10	<100

*absent within detection limit <10 cfu/g; Clostridial spores <3MPN
** If aerobic bacterial spores absent (<10 cfu/g), not tested separately

Chemical and physical parameters

Water activity (% RH)	1,5	< 10%	(ie. A_w <0,1)
Saccharose (%)	45,2	25-55%	
Lactose (%)	0,13	<1%	
β-lactoglobulin	<0,03	<0,1 ug/g	

Acceptance
Released 2 3.2005

2.3.2005
Timo Hietala

We hereby declare that the starter cultures produced at Valio Ltd, R&D Production of Starter Cultures, including *Lactobacillus rhamnosus* GG Grade P, have not been genetically modified, nor do they contain GMO-containing raw materials or additives.

Valio Ltd R&D Production of Starter Cultures
PO Box 80 FIN-00039 VALIO FINLAND
Haidenhoftintie 4 01300 Vantaa Finland
Telephone +358 10381 121
Telefax +358 10 381 2910
VAT No. FI01162976
Trade Reg. No. 17.644
Reg. Domicile Helsinki

VALIO	Unit R&D 01	Operation Production of Starter Cultures	Level III	Code TEA 01.552.045100MJD

Revision	Page	Draft	Accepted	Date
3	1 (1)	Timo Hietala	Hannikainen Jaakko	7.10.2003

Name
Lot specific analysis certificate for Mead Johnson

LACTOBACILLUS RHAMNOSUS GG - "Grade P"

Concentrated, freeze-dried bacterial powder

Batch number B31203 Manufacturer Valio Best Before 3.12.2005

LGG counts

	Lot	Specification cfu/g
Lactobacillus GG	$6{,}3 \times 10^{11}$	$\geq 3 \times 10^{11}$

Hygienic Quality

	Lot	Specification cfu/g
Total viable aerobic count (non lactic bacteria)	<10	<10[3]
Yeasts	<10	<100
Molds	<10	<100
Enterobacteriaceae and other Gram neg.	0	0/ g
Clostridial spores*	<3	<3*
Staphylococcus aureus *	<10	<10*
E coli	0	0/g
Salmonella	<10	0 /25 g
Pseudomonas aeruginosa*	<10	<10*
Aerobic bacterial spores (30 °)	<10	<100
**Bacillus cereus	<10	<100

*absent within detection limit <10 cfu/g; Clostridial spores <3MPN
** If aerobic bacterial spores absent (<10 cfu/g), not tested separately

Chemical and physical parameters

Water activity (% RH)	1,0	< 10%	(ie. A_w <0,1)
Saccharose (%)	49,4	25-55%	
Lactose (%)	<0,1	<1%	
β-lactoglobulin	<0,03	<0,1 ug/g	

Acceptance
Released

7 1.2004
Timo Hietala

Note water by Karl Fischer method 2,2%

We hereby declare that the starter cultures produced at Valio Ltd, R&D Production of Starter Cultures, including *Lactobacillus rhamnosus* GG Grade P, have not been genetically modified, nor do they contain GMO-containing raw materials or additives.

Valio Ltd R&D Production of Starter Cultures | PO Box 60 FIN-00039 VALIO FINLAND | Haidehofintie 4 01300 Vantaa Finland | Telephone +358 10381 121 Telefax +358 10 381 2910 | VAT No. FI01162076 Trade Reg. No. 17 844 Reg. Domicile Helsinki

VALIO	Unit R&D 01	Operation Production of Starter Cultures	Level III	Code TEA 01.552.045100MJD

Revision	Page	Draft	Accepted	Date
3	1 (1)	Timo Hietala	Hannikainen Jaakko	7.10.2003

Name
Lot specific analysis certificate for Mead Johnson

LACTOBACILLUS RHAMNOSUS GG - "Grade P"

Concentrated, freeze-dried bacterial powder

Batch number B40218 Manufacturer Valio Best Before 18.2.2006

LGG counts

	Lot	Specification cfu/g
Lactobacillus GG	$7{,}4 \times 10^{11}$	$\geq 3 \times 10^{11}$

Hygienic Quality

	Lot	Specification cfu/g
Total viable aerobic count (non lactic bacteria)	<10	$<10^3$
Yeasts	<10	<100
Molds	<10	<100
Enterobacteriaceae and other Gram neg.	0/g	0/ g
Clostridial spores*	<3	<3*
Staphylococcus aureus *	<10	<10*
E coli	0/g	0/g
Salmonella	0/25 g	0 /25 g
Pseudomonas aeruginosa*	<10	<10*
Aerobic bacterial spores (30 °)	<10	<100
**Bacillus cereus*	<10	<100

*absent within detection limit <10 cfu/g; Clostridial spores <3MPN
** If aerobic bacterial spores absent (<10 cfu/g), not tested separately

Chemical and physical parameters

Water activity (% RH)	0,5	< 10%	(ie. A_w <0,1)
Saccharose (%)	48,7	25-55%	
Lactose (%)	0,16	<1%	
β–lactoglobulin	<0,03	<0,1 ug/g	

Acceptance
Released

25.3.2004
Timo Hietala

Note: water by Karl Fischer method 3,2%.

We hereby declare that the starter cultures produced at Valio Ltd, R&D Production of Starter Cultures, including *Lactobacillus rhamnosus* GG Grade P, have not been genetically modified, nor do they contain GMO-containing raw materials or additives

Valio Ltd R&D Production of Starter Cultures | PO Box 60 FIN-00039 VALIO FINLAND | Haidahontie 4 01300 Vantaa Finland | Telephone +358 10381 121 Telefax +358 10 381 2910 | VAT No. FI01162978 Trade Reg. No. 17.844 Reg. Domicile Helsinki

VALIO	Unit R&D 01	Operation Production of Starter Cultures	Level III	Code TEA 01 552 045100MJD

Revision	Page	Draft	Accepted	Date
3	1 (1)	Timo Hietala	Hannikainen Jaakko	7.10.2003

Name
Lot specific analysis certificate for Mead Johnson

LACTOBACILLUS RHAMNOSUS GG - "Grade P"

Concentrated, freeze-dried bacterial powder

Batch number B41031 Manufacturer Valio Best Before 31.10.2006

LGG counts

	Lot	Specification cfu/g
Lactobacillus GG	$6{,}9 \times 10^{11}$	$\geq 3 \times 10^{11}$

Hygienic Quality

	Lot	Specification cfu/g
Total viable aerobic count (non lactic bacteria)	<10	$<10^3$
Yeasts	<10	<100
Molds	<10	<100
Enterobacteriaceae and other Gram neg.	0/g	0/ g
Clostridial spores*	<3	<3*
Staphylococcus aureus *	<10	<10*
E.coli	0/g	0/g
Salmonella	0/25 g	0 /25 g
Pseudomonas aeruginosa*	<10	<10*
Aerobic bacterial spores (30 °)	<10	<100
**Bacillus cereus*	<10	<100

*absent within detection limit <10 cfu/g; Clostridial spores <3MPN
** if aerobic bacterial spores absent (<10 cfu/g), not tested separately

Chemical and physical parameters

Water activity (% RH)	3,37	< 10%	(ie. A_w <0,1)
Saccharose (%)	52,00	25-55%	
Lactose (%)	0.17	<1%	
β-lactoglobulin	<0,03	<0.1 ug/g	

Acceptance
Released

15.12.2004
Timo Hietala

We hereby declare that the starter cultures produced at Valio Ltd, R&D Production of Starter Cultures, including *Lactobacillus rhamnosus* GG Grade P, have not been genetically modified, nor do they contain GMO-containing raw materials or additives.

Valio Ltd R&D Production of Starter Cultures
PO Box 80 FIN-00039 VALIO FINLAND
Hedenhoffintie 4 01300 Vantaa Finland
Telephone +358 10381 121
Telefax +358 10 381 2910
VAT No. FI01162976
Trade Reg. No. 17 644
Reg. Domicile Helsinki

QC analysis protocol

	The tests and limits (cfu/g, others indicated)				
Analysis	1st inoculum	2nd inoculum (IPC)	Production fermentation (IPC)	Concentrate (IPC)	Freeze dried powder (QC,IPC)
Microbiological					
Lactobacillus GG, accredited		IPC	IPC	IPC	$\geq 5 \times 10^{11}$
Non lactic acid bacteria	IPC	IPC	IPC	IPC	<1000
Coliforms at 30°C					0/10 g
*Enterobacteriaceae and other Gram neg.					0/10 g
Yeasts					<100
Moulds					<100
Salmonella, accredited					0 /25 g
Staphylococcus aureus, accredited					<10
Pseudomonas aeruginosa					<10
Clostridial spores					<3
Aerobic bacterial spores 30°C					<100
***Bacillus cereus, accredited					<10
**Lactococci		IPC	IPC	IPC	IPC
Enterococci		IPC	IPC	IPC	
Chemical and physical					
Saccharose					25-55%
Lactose (IPC)					<0,5%
Moisture (IPC)					<10% (<5%)
Water activity (IPC)					<10% (<5%)
ß-lactoglobulin (IPC)					<0,1 (<0,5%)

Quality for Performance

struktol

Schill + Seilacher

Technical Data Sheet

STRUKTOL J 673

Antifoam agent

Chemical Composition

Alkoxylated fatty acid esters on vegetable base

Properties

Appearance	yellowish liquid	
Odour	neutral	
Specific Gravity	980 - 1020 kg/m^3 at 20 °C	DIN 51757
Viscosity	230 - 490 mPa.s at 25 °C	DIN 53015
Flash Point	> 200 °C	DIN 51376
Solidification Point	< - 10 °C	ISO 2207
Toxicological Behaviour	inoffensive	
Ecological Behaviour	inoffensive - see safety-data-sheet	
Storage Stability	at least 1 year at adequate storage.	

STRUKTOL J 673 corresponds to FDA

Application

Dosage and most favourable adding point of **STRUKTOL J 673** depend on the need of the respective factory and have to be found out by trials. **STRUKTOL J 673** can be used as delivered as well as diluted with water.

This publication is meant to advise to the best of our knowlegde Due to various applications and working methods we cannot accept any liability. Patent rights of third parties have to be considered in any case This new leaflet replaces all previously printed documentation.
Alterations reserved 09/05/2001

Schill + Seilacher "Struktol"
Aktiengesellschaft
Moorfleeter Str. 28
22113 Hamburg
GERMANY

Phone +49 40 73 36 2-0
Fax: +49 40 73 36 2-194
E-Mail info@struktol.de

www.struktol.de

TÜV

4.19-1-0/-01-12

Appendix D:

Analytical Method for LGG

G8112
Version 1

Mead Johnson Nutritionals

Method Description. General Method for the Enumeration of Lactic Acid Bacteria in Bacteria-Supplemented, Formulated Nutritional Products

Effective Date: MAR 10 2004
Supersedes: G8112e dated March 18, 2002

PURPOSE OF ISSUANCE

Revisions to method format and versioning to enable web accessibility.

APPROVAL OF THIS PAGE INDICATES APPROVAL OF ALL PAGES IN THE QUALITY CONTROL ANALYTICAL METHOD.

AUTHORED BY: DATE: 4-22 03

APPROVED BY. DATE: 04/30/03

INFORMATION BELOW MUST BE COMPLETED BY INDIVIDUAL PRINTING THE METHOD.

PRINTED BY: _____ DATE: _____

REFERENCE COPY - OFFICIAL DOCUMENT RESIDES WITHIN THE ELECTRONIC SYSTEM - PAGE 1 OF 4

G8112
Version 1

Mead Johnson Nutritionals

Method Description: General Method for the Enumeration of Lactic Acid Bacteria in Bacteria-Supplemented, Formulated Nutritional Products

Effective Date: MAR 10 2004

Supersedes: G8112e dated March 18, 2002

1 Scope

This method is used for the enumeration of lactic acid bacteria, principally *Lactobacillus rhamnosis*, in formulated, powdered nutritional products. The method requires that the dry material be blended with a diluent, releasing the bacterial cells into the fluid followed by conventional plating, incubation and counting procedures. This method may be useful in the enumeration of other bacterial species in similar products but the methods application must be validated for each organism.

2. Equipment and Supplies

2.1 Adjustable Speed, Stomacher-Type Blender, 400 mL capacity

2.1.1 Seward Model 400 Circulator or equivalent

2.1.2 Typically the stomacher is set to 200 excursions per minute and the sample blended for 60 seconds.

2.2 Sterile Stomacher Bags, 400 mL size

2.3 Sterile 100mm. Petri Dishes

2.4 Sterile Pipettes, 10/11 mL, 2.2 mL, 1.1 mL

2.5 Sterile, Disposable Spatulas or Spoons

2.6 Incubator, 37°C., 5% CO_2

2.6.1 When an incubator capable of delivering 5% CO_2 is unavailable, incubation can be accomplished in a standard incubator using jars with CO_2 generation envelopes (6.5% – 7.5%). BBL BB4370308

2.7 Transmitted Light Colony Counter with Magnifier

3. Chemicals, Reagents and Media

3.1 Lactobacillus MRS Agar, G8015

3.1 1 Sterile, bottles agar for pour plates, tempered to between 45° and 50° C. for use in preparing pour plates

3.2 Peptone-Saline Diluent, G8016

3.2.1 99 mL Dilution Blanks

3.2.2 180 mL Dilution Blanks

4. Sample Preparation

The sample must be collected in such a manner as to ensure it is representative form the container from which it is derived. Generally this requires that the sample be mixed prior to opening, or stirred with a sterile implement. All transfers, dilutions and plating operations shall be performed in a clean, draft free environment using appropriate microbiological laboratory technique.

5. Test Procedure

5.1 Perform all sample weightings in triplicate

5.2 Prepare the primary dilution of the sample by aseptically transferring 20.0 grams of the well-mixed sample to a sterile stomacher bag. Add 180 mL of sterile peptone-saline diluent. Place the bag in the stomacher and blend for 60 seconds at 200 excursions per minute.

Mead Johnson Nutritionals

Method Description: General Method for the Enumeration of Lactic Acid Bacteria in Bacteria-Supplemented, Formulated Nutritional Products

Effective Date: MAR 10 2004
Supersedes: G8112e dated March 18, 2002

5.3 Immediately remove this primary dilution from the stomacher and transfer 1.0 mL to a 99 mL dilution bottle and 1.0 mL and 0.1 mL to each of two separate petri dishes. Stopper the dilution bottle and shake vigorously. From this dilution transfer a 1.0 mL aliquot to additional 99 mL dilution and 1.0 mL and 0.1 mL aliquots to each of two separate petri dishes Prepare additional serial dilutions, plating each in a similar manner, through the 10^{-8} dilution. Shake each dilution vigorously before making the transfer to the next in the series.

5.3.1 If the analyst can determine from experience which dilutions are likely to produce countable plates, then plating need only be done on dilutions surrounding that dilution deemed most likely to produce countable plates.

5.4 Pour each plate with approximately 20 mL tempered MRS agar and carefully swirl to distribute the inoculum throughout the agar. Allow the agar to solidify. Invert the plates, setting the bottoms and tops ajar, and allow the surface to air-dry (i.e , 30 minutes).

5.5 Incubate the plates inverted at 37°C., 5% CO_2 for 72 hours.

6. Results Reporting - Colony Count Calculations

6 1 Count all of the colonies on countable plates (i.e., plates having between 25 and 250 colonies) and record all values including the dilution for that plate. Calculate the average of the counts from appropriate plates, being certain to apply the correct dilution factor for the dilution associated with the set of countable plates Report this count as colony forming units CFU, per gram of product.

6 1 1 Note: For details about plate count interpretation, the reader is referred to reference 7.2 of this method.

6.2 Example: Twenty grams of the product were stomached with 180 mL of peptone-saline diluent for 60 seconds at 200 excursions per minute. This primary dilution was serially diluted so the final dilution was 10^{-8}. This procedure was followed three times (three replicates) for increased accuracy. The 5th, 6th, 7th and 8th dilutions were plated and following incubation, the following results reported. The reported count is 2.5×10^{8} CFU/gram.

	MRS Plate Count		
Dilution	Replicate 1	Replicate 2	Replicate 3
10^{-5}	TNC	TNC	TNC
10^{-6}	238	240	249
10^{-7}	56*	22	26*
10^{-8}	0	0	0
Count Ratio:	2.35	NA	1.04
Reported Count: $238 \times 10^{6} + 240 \times 10^{6} + 249 \times 10^{6} + 26 \times 10^{7} = 2.5 \times 10^{8}$ CFU/gram			
* When two or more countable plates are encountered at differing dilutions, calculate the ratio of the higher of the counts to the lower. Include both numbers in the calculations if the ratio is 2 or less. If greater than 2, repeat the count.			

Mead Johnson Nutritionals

Method Description: General Method for the Enumeration of Lactic Acid Bacteria in Bacteria-Supplemented, Formulated Nutritional Products

Effective Date: MAR 10 2004

Supersedes: G8112e dated March 18, 2002

7 References

7.1 Method G8112d: *General Method for the Determination of Total Lactic Acid Bacteria Count.*

7.2 *Compendium of Methods for the Microbiological Examination of Foods* American Public Health Association, 4th Edition, 2001.

8. Chronology

8.1 Method G8112e. This method represents a rewrite of Method G8112d and is being issued for purposes of clarification. This method supersedes method G8112d.

Appendix E:

Genetic Stability Testing of LGG

Appendix E: Genetic Stability Testing of LGG by PFGE

PFGE-profiles of colonies isolated from infant formula samples and the *L. rhamnosus* GG lot used in the formula

Sample: Infant formulas Restriction enzyme *Asc* I

1. Nutramigen – 25C, 80 wks (B20908)
2. Pregestimil - 25C, 72 wks (B20908)
3. Partial hydrolysate - 25C, 63 wks (B20908)
4. *L. rhamnosus* GG (B20908)
5. *L. rhamnosus* GG
6. Low Range PFGE-marker
7. Nutramigen - 25C, 52 wks (B20306)
8. *L rhamnosus* GG B20306
9. Partial hydrolysate – 40C, 12 wks (B10225)
10. *L. rhamnosus* GG B10225
11. Nutramigen – 40C, 12 wks (B40919)
12. *L. rhamnosus* GG B40919
13. *L.. rhamnosus* GG
14. Low Range PFGE-marker
15. Lambda Ladder PFGE-marker

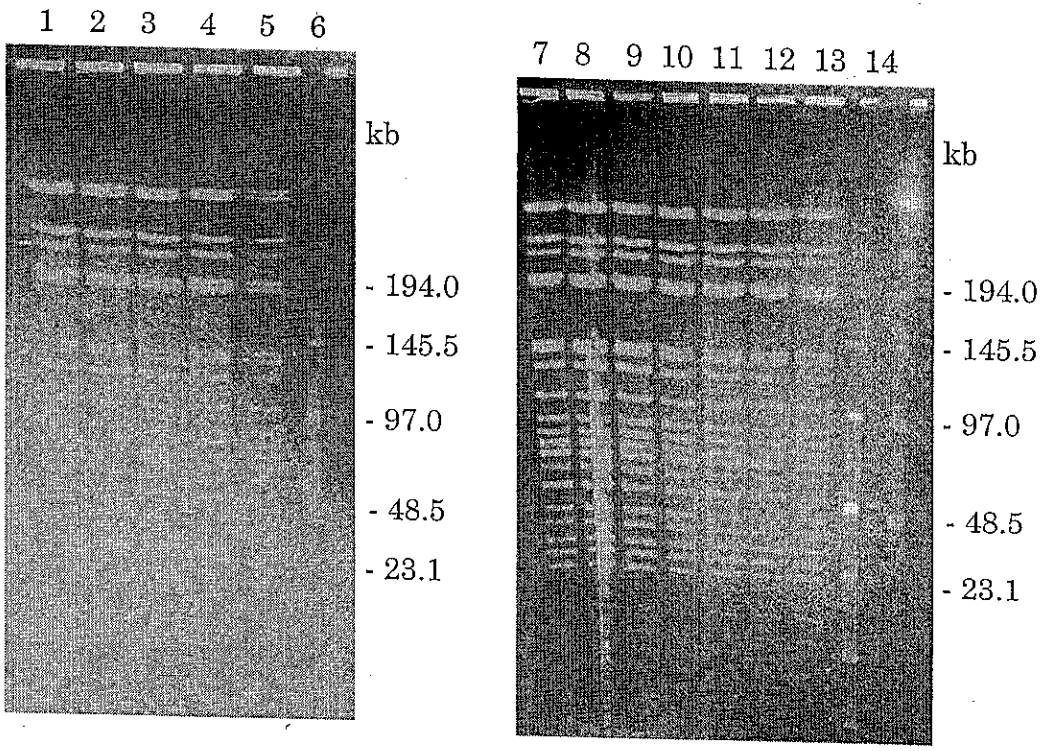

Valio Ltd, R&D
26.5.2005 /ST

PFGE-profiles of colonies isolated from infant formula samples and the *L. rhamnosus* GG lot used in the formula

Sample: Infant formulas Restriction enzyme *Fse* I

1. Nutramigen – 25C, 80 wks (B20908)
2. Pregestimil - 25C, 72 wks (B20908)
3. Partial hydrolysate - 25C, 63 wks (B20908)
4. B20908
5. *L. rhamnosus* GG
6. Low Range PFGE-marker
7. Part hydrolysate – 40C, 12 wks (B10225)
8. *L. rhamnosus* GG B10225
9. Nutramigen – 40C, 12 wks (B40919)
10. *L. rhamnosus* GG B40919
11. *L. rhamnosus* GG
12. Low Range PFGE-marker
13. Lambda Ladder PFGE-marker
14. Nutramigen – 25C, 52 wks (B20306)
15. *L. rhamnosus* GG B20306
16. *L. rhamnosus* GG
17. Low Range PFGE-marker
18. Lambda Ladder PFGE-marker

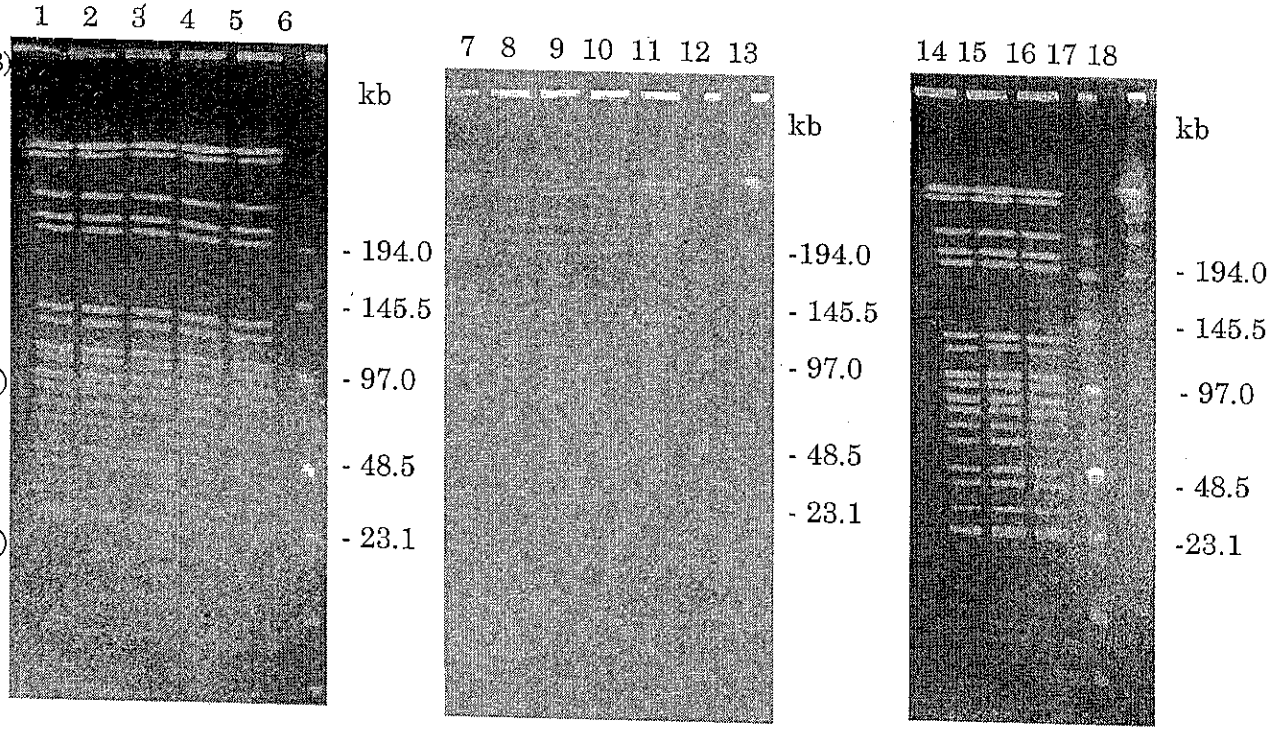

Valio Ltd, R&D
26.5.2005 /ST

PFGE-profiles of colonies isolated from infant formula samples and the *L. rhamnosus* GG lot used in the formula

Sample: Infant formulas Restriction enzyme *Not* I

1. Nutramigen – 25C, 80 wks (B20908)
2. Pregestimil - 25C, 72 wks (B20908)
3. Partial hydrolysate - 25C, 63 wks (B20908)
4. *L. rhamnosus* GG B20908
5. *L. rhamnosus* GG
6. Low Range PFGE-marker
7. Lambda Ladder PFGE-marker
8. Nutramigen – 25C, 52 wks (B20306)
9. *L. rhamnosus* GG B20306
10. Partial hydrolysate – 40C, 12 wks (B10225)
11. *L. rhamnosus* GG B10225
12. Nutramigen – 40C, 12 wks (B40919)
13. *L. rhamnosus* GG B40919
14. *L. rhamnosus* GG
15. Low Range PFGE-marker

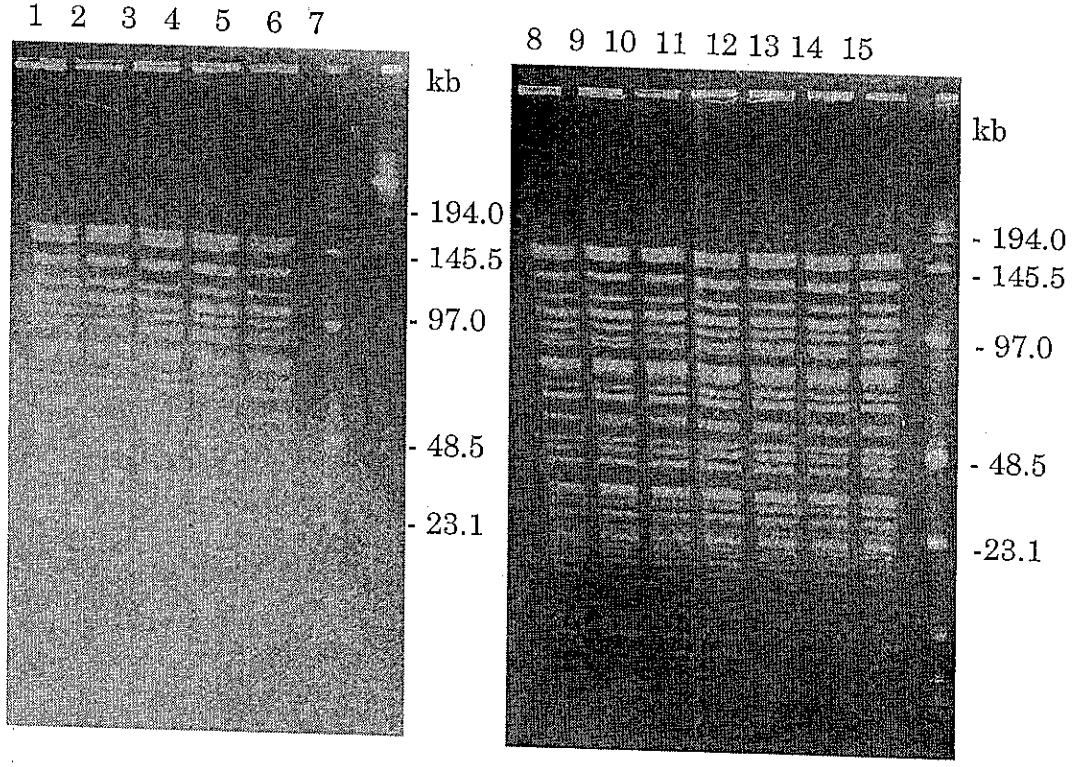

Valio Ltd,
R&D
26.5.2005 /ST

Appendix F:

Partial List of Products Containing LGG Sold Worldwide

Appendix F: Partial List of Products Containing LGG Sold Worldwide

Country/ Territory	Company	Brand	Types of Products	Year Launched
Conventional Food Products				
Finland	Valio Ltd	Gefilus	Fermented whey drink, fermented milk, yogurt, milk, juice drink, juice/milk drink (mini bottle), cheese	1990
Netherlands	Campina (Melkunie bv., Mona division)	Vifit	Yogurt, drinkable yogurt, quark	1994
Norway	Tine Norwegian Dairies	Biola	Fermented milk, yogurt, drinkable yogurt	1995
Chile	Sociedad Productores de Leche S.A. (Soprole)	Uno al Dia	Fermented milk drink	1995
Switzerland	Emmi AG	Aktifit Plus 4 Plus	Fermented milk drink (mini bottle), yogurt, quark	1996
Ecuador	Industrias Lacteas Toni S.A.	Toni	Yogurt, drinkable yogurt	1996
Japan	Takanashi Milk Products Co , Ltd.	Onaka He GG! LGG & Milk	Fermented milk drink, yogurt	1996
Australia	Pauls Limited	Vaalia	Yogurt	1997
Italy	Granarolo S.p A	Vivi Vivo	Milk, yogurt	1998
Iceland	Mjólkursamsalan	LGG+	Fermented milk drink (mini bottle), yogurt	1998
Croatia, Slovenia & Bosnia-Herzegovina	LURA d.d.	BioAktiv	Yogurt, yogurt drink	1998
Israel	Tnuva Dairy Products	LGG	Yogurt, fermented milk drink (mini bottle)	1998
Korea	Maeil Dairy Industry Co., Ltd.	GG	Fermented milk drink, drinkable yogurt	1998
Germany	Emmi Deutschland GmbH	Emmifit	Fermented milk drink (mini bottle)	1998
Estonia	Valio Ltd	Gefilus	Fermented milk (Kefir), yogurt	1999
Greenland	Mjólkursamsalan	LGG+	Fermented milk drink (mini bottle)	1999
Portugal	Emmi AG	Emmifit	Fermented milk drink (mini bottle)	1999
Sweden	Valio Sverige AB	Gefilac	Fermented milk, yogurt,	2000

SWEDEN	VALIO SVERIGE AB	GEFILAC	FERMENTED MILK, YOGURT, JUICE DRINKS	2000
Papua-New Guinea	Pauls Limited	Vaalia	Yogurt	2000
Taiwan	Hey Song Corporation	Hey Song Beautiful Day	Drinkable yogurt	2001
Spain	Iparlat S.A.	Kaiku Actif	Fermented milk drink	2001
Indonesia	Pauls Limited	Vaalia	Yogurt	2001
Ireland	Glanbia Plc.	Yoplait Everybody	Drinkable yogurt	2001
United Arab Emirates	Al Ain Dairy Farm	Laban with Gefilac	Fermented milk	2001
Germany, France, Belgium, Netherlands, Norway, Sweden, Denmark Italy Spain	Mead Johnson Company	Nutramigen LGG	Hydrolysate infant formula	2002
Other Products				
Italy	Dicofarm S.p.A.	Dicoflor Giflorex Floridal	Bacterial powder in sachets, ORS + LGG	1995
Finland	Valio Ltd	Gefilus	Hard gelatin capsules	1997
U.S.A.	ConAgra Foods, Inc.	Culturelle	Hard gelatin capsules	1998
Estonia	Valio Ltd	Gefilus	Hard gelatin capsules	1998
Germany	InfectoPharm GmbH	InfectoDiarrstop GG LGG	ORS + LGG, Hard gelatin capsules	2000
Lithuania	Valio Ltd	Gefilus	Hard gelatin capsules	2000
France	Nutergia/ Lallemand	Ergyphilus Plus	Hard gelatin capsules	2001

B

synovate

Research reinvented

To: Carlos Lifschitz, MD, Director Medical Affairs Europe, Mead Johnson Nutritionals, Annette Leary, Manager, Global Customer Insights, Mead Johnson Nutritionals

From: Tracey Berkenbush, Assistant Vice-President, Synovate Healthcare

Date: February 28, 2007

PROJECT TITLE: Clinical Experience with Nutramigen LGG
MRD NUMBER: Synovate: 6J94
Mead Johnson Nutritionals: 06-0321

EXECUTIVE SUMMARY

A survey was conducted with physicians in Europe who are recommenders of hypoallergenic formulas to determine their recommendation of, and experience with, Mead Johnson Nutritionals' Nutramigen LGG Infant Formula, a hypoallergenic formula that contains the probiotic Lactobacillus GG.

Among respondents, most (85%) report they currently recommend Nutramigen LGG – recommending either Nutramigen LGG Stage 1 (for infants less than four [4] months of age) or Nutramigen LGG Stage 2 (for infants older than four [4] months of age). The majority of respondents (72%) report recommending both Nutramigen LGG products. In total, only 3% indicate they are no longer recommending Nutramigen LGG although they did recommend the product in the past.

There is little difference in the recommendation behaviors of European physicians of Nutramigen LGG Stage 1 and Stage 2. Both products are widely recommended for the dietary management of symptoms of cow milk protein allergy, GI Manifestations, and Atopic Dermatitis. Additionally, Stage 1 is also used for infantile colic and Urticaria.

Over half of those recommending Nutramigen LGG report symptom improvement beyond that offered by Nutramigen that does not contain the probiotic LGG.

In addition, a majority of respondents see benefits of Nutramigen LGG beyond that of cow milk protein symptom management. These physicians indicate recommending Nutramigen with LGG for: *the positive effect of LGG on gut flora, earlier resolution of symptoms, improved efficacy (compared to Nutramigen without LGG), published clinical data, stimulation of the immune system,* and *improved gut health.*

Nearly all physicians (97%) indicate they see no difference in the incidence of adverse events related to the use of Nutramigen LGG compared to Nutramigen that does not contain LGG. Physicians defined adverse events as: *diarrhea, loose stools, vomiting, refusal to drink, colic,* and *no improvement in symptoms (with use of Nutramigen LGG).* In total, physicians report only 2% of patients experience adverse events using Nutramigen LGG.

BACKGROUND/OBJECTIVES

Nutramigen LGG (Stage 1 and 2) has been marketed in Europe for approximately 3 years. The purpose of this research is to obtain information from Health Care Providers in Sweden, Netherlands, and Belgium on their clinical experience and use of marketed Nutramigen LGG.

Synovate obtained information from Health-Care Providers (Pediatricians, Ped GIs and Allergists) who are recommenders of hypoallergenic formulas for their infant patients less than 12 months of age.
Specifically:

- Recommendation of Nutramigen LGG
- Reasons for recommending Nutramigen LGG
- A comparison of the clinical benefits of Nutramigen with LGG compared to Nutramigen that does NOT contain the probiotic LGG.
- A comparison of the adverse events noted of Nutramigen with LGG compared to Nutramigen that does NOT contain the probiotic LGG.

METHODOLOGY

Mead Johnson Medical Sales representatives identified physicians known to recommend hypoallergenic formulas in the European countries of: Sweden, Netherlands, and Belgium. In keeping with government regulations regarding privacy and confidentiality, this list was provided to the Medical Director of MJN Europe; the list of physicians' names was not sent outside of the European Union (EU).

A personalized letter (see appendix) written from the MJN Medical Director requesting participation was sent to potential respondents. The respondents were asked to log into a secure URL link hosted by Synovate. Respondents entered the survey through a secured site, where they were required to enter their unique user ID and password as stated in the letter. The ID and passwords were taken out of the data file before it was sent to MJN so no linkage of the data to the physician respondent can be made. A second reminder letter (see appendix) was mailed one week after the initial letter requesting participation in the survey among non-responders.

The participants were informed that.

- Their privacy will be protected – personal identifiable information and responses will be kept confidential from the study requestor (MJN).
- Their results will be reported in aggregate and may be used for regulatory filings.
- Upon agreement to conditions and completion of survey, up to 50 Euros will be transferred to their bank account as compensation for their time.

Data was collected from December 8, 2006 through January 8, 2007. Rate of completion among the targeted countries was 10% which yielded 86 completed interviews. This fell within expected rates based on previous research both in the United States and in Europe.

Physicians interviewed included general Pediatricians, Pediatric Gastroenterologists and Pediatric Allergists. They have an average of nineteen years in practice and saw an average of 700 patients in the last year.

Synovate reviewed each survey for completeness, tabulated the data, and made payment by bank transfer to the physicians. No payment was made to any physician who failed to sign the consent and provide bank details.

Synovate adheres to all privacy legislation in these countries and will not in any way use or disclose the names or personal information of the physicians outside the EU, to any third parties or to MJN itself.

Of note, Synovate is a safe harbor company. A file of the electronic data was transmitted through a secure ftp site to Synovate's Florham Park office for analysis.

Sample Disposition

	Total	Sweden	Netherlands	Belgium
	#	#	#	#
Total Names/Letters Mailed	790	160	412	218
No status/did not respond	681	137	348	196
Terminated from survey at QC (did not agree to terms)	3	1	2	-
Quit interview	20	5	11	4
Total Completes	**86**	**17**	**51**	**18**
STAGE 1				
Currently recommend Nutramigen LGG Stage 1	69	9	42	18
Have recommended Nutramigen LGG Stage 1 in the past but no longer recommend	3	2	1	-
Have never recommended Nutramigen LGG Stage 1	14	6	8	-
STAGE 2				
Currently recommend Nutramigen LGG Stage 2	66	12	36	18
Have recommended Nutramigen LGG Stage 2 in the past but no longer recommend	4	1	3	-
Have never recommended Nutramigen LGG Stage 2	16	4	12	-

Physician Profile

Physician Profile		
Total Number of Respondents		Total (n=86)
		%
	General pediatrician	66
	Pediatric Gastroenterologist	14
	Pediatric Allergist	14
	Other	6
Years in practice		
	Mean	19
	Range	2 - 38
# of patients <12 months old seen past year		
	Mean	700
	Range	6 - 4000
# of patients consuming Nutramigen LGG Stage 1 in past 24 months For infants less than 4 months of age (among recommenders of Stage 1)		
	Mean	44
	Range	1 - 1500
# of patients consuming Nutramigen LGG Stage 2 in past 24 months For infants less than 4 months of age (among recommenders of Stage 2)		
	Mean	26
	Range	1 - 750

RESULTS

1. NUTRAMIGEN LGG RECOMMENDATION AND USAGE – TOTAL (STAGE 1 and 2)

RECOMMENDATION

In total, most (85%) physicians surveyed report recommending either Nutramigen LGG Stage 1 or Stage 2 Few physicians (3%) indicate no longer recommending Nutramigen LGG although they had recommended it in the past.

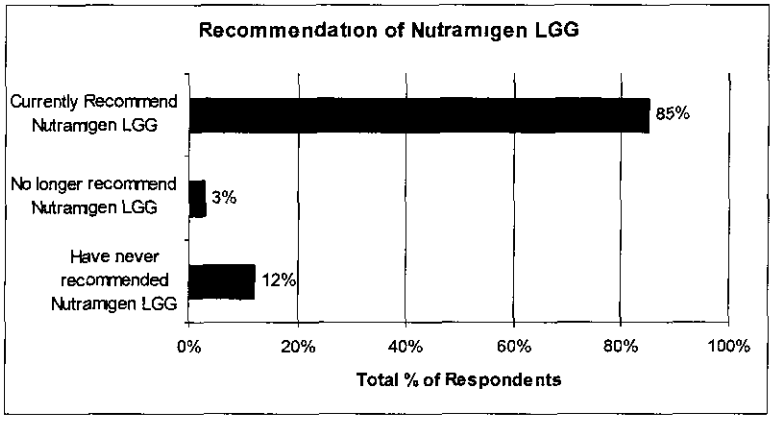

A notable number (72%) of physicians, currently recommend both Stage 1 and Stage 2 Nutramigen LGG.

CLINICAL EXPERIENCE

On average, each physician reports recommending Nutramigen LGG to 66 patients over the past 24 months.

The majority of physicians recommend Nutramigen LGG for GI manifestations and Atopic Dermatitis. In addition, Nutramigen with LGG is recommended for symptoms of Infantile Colic, wheezing/asthma and Urticaria. Few physicians report recommending Nutramigen LGG for Allergic Rhinitis. "Other" indications given for the recommendation of Nutramigen with LGG include: *prophylaxis*, *cow milk allergy*, and *family history*.

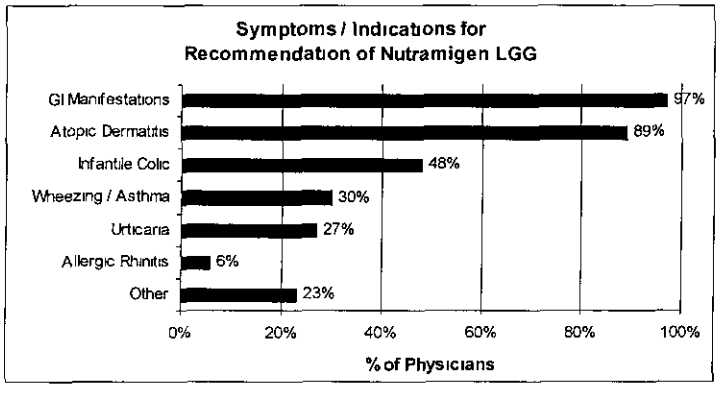

1. NUTRAMIGEN LGG RECOMMENDATION AND USAGE – TOTAL (STAGE 1 and 2) (continued)

CLINICAL EXPERIENCE (continuted)

Over half (59%) of the physicians surveyed indicate they noted improvement in symptoms with the use of Nutramigen with LGG beyond that offered by Nutramigen that does not contain LGG.

A few physicians noted recommending Nutramigen with LGG as Nutramigen without LGG is no longer available. However, most respondents see benefits of Nutramigen LGG beyond that of cow milk protein symptom management. These physicians indicate recommending Nutramigen with LGG for: *the positive effect of LGG on gut flora, earlier resolution of symptoms, improved efficacy, published clinical data, stimulation of the immune system*, and *improved gut health.*

ADVERSE EVENTS

Nearly all physicians (97%) indicate they see no difference in the incidence of adverse events related to the use of Nutramigen containing LGG compared to Nutramigen that does not contain LGG.

In total, over the past two years these physicians saw 120,362 infants less than 12 months of age. Of these infants, approximately 4% (4,868) consumed Nutramigen LGG with only 1.3% experiencing adverse events. Adverse events as described by these physicians include: refusal to feed, no improvement in symptoms, colic, diarrhea, and vomiting

2. NUTRAMIGEN LGG STAGE 1 (For infants less than 4 months of age)

RECOMMENDATION

In total, the majority of physicians surveyed (80%) are currently recommending Nutramigen LGG Stage 1. Few physicians (4%) indicate no longer recommending Nutramigen LGG Stage 1 although they had recommended it in the past.

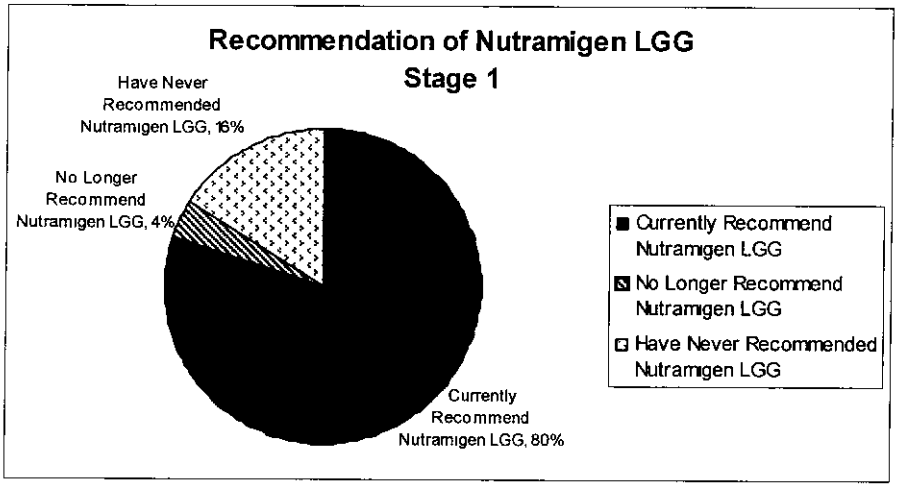

CLINICAL EXPERIENCE

On average, each physician reports recommending Nutramigen LGG Stage 1 to 44 patients over the past 24 months.

The majority of physicians recommend Nutramigen LGG Stage 1 for GI manifestations and Atopic Dermatitis. In addition, Nutramigen with LGG Stage 1 is recommended for symptoms of Infantile Colic, wheezing/asthma and urticaria. Few physicians report recommending Nutramigen LGG Stage 1 for Allergic Rhinitis. "Other" indications given for the recommendation of Nutramigen with LGG Stage 1 include prophylaxis, cow milk allergy, and family history.

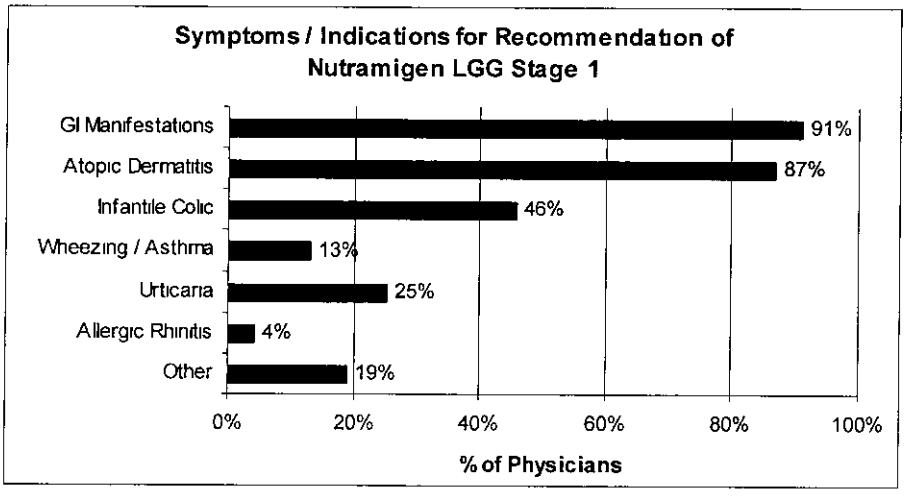

2. NUTRAMIGEN LGG STAGE 1 (continued)

CLINICAL EXPERIENCE (continued)

Over half (55%) of the physicians surveyed indicate they noted improvement in symptoms with the use of Nutramigen LGG Stage 1 beyond the improvement provided by Nutramigen that does not contain LGG.

ADVERSE EVENTS

Nearly all physicians (97%) indicate they see no difference in the incidence of adverse events related to the use of Nutramigen LGG Stage 1 compared to Nutramigen that does not contain LGG.

In total, physicians report few patients (1%) experience adverse events. As offered by volunteered responses, these events involved primarily symptoms of colic, diarrhea and vomiting.

Adverse Events Experienced on Nutramigen LGG Stage 1 Among 1% of Patients Experiencing Adverse Events
Vomiting, worse pain
Colic
diarrhea, vomiting
frequent looser stools
loose stools
Remaining GI problems due to possible allergic reaction (no reaction to Amino Acid feeding)
Vomiting and not drinking properly, especially during the first three days
Unpleasant taste (entrainant) refusal to feed
Intolerance (allergic symptoms do not improve)
More colic
Persisting diarrhea, still dermatologic lesions
Refusal of milk

RESPONDENTS WHO NO LONGER RECOMMEND NUTRAMIGEN LGG STAGE 1

Physicians who no longer recommend Nutramigen LGG Stage 1 (4% of the total sample) give reasons of Nutramigen LGG Stage 1 being too expensive/ price, no clear indication for Nutramigen LGG, and not treating patients within the age category for use of the Stage 1 product.

Reasons No Longer Recommending Nutramigen LGG Stage 1 Number of Respondents = 3
No clear indications for Nutramigen LGG 1 The price difference
Many of my patients are older than 4 month I haven't need to recommend it
Decline in patient contact requiring Nutramigen LGG Currently attending physician in a different unit (older patients)

2. NUTRAMIGEN LGG STAGE 1 (continued)

RESPONDENTS WHO HAVE NEVER RECOMMENDED NUTRAMIGEN LGG STAGE 1

Physicians who have never recommend Nutramigen LGG Stage 1 (16% of the total sample) give reasons of Nutramigen LGG Stage 1 being too expensive, having no need for it/did not think of it, and it is not specifically endorsed by the pediatric association or government agency

Reasons Never Recommending Nutramigen LGG Stage 1 Number of Respondents = 14
Because in Sweden you must prescribe Nutramigen LGG as medicine and many parents find it too expensive
I have prescribed Nutramigen, but so far no need for Nutramigen LGG because the patients had no problems with the stomach
I have no impression of LGG being efficient for reflux disorders
I haven't found it necessary
I use to start with Nutramigen without LGG and when the children accept this formula I recommended N with LGG, stage 2 The children are often older than 4 months because breastfeeding up to 6months
Not approved nor reimbursed by our Nat authorities
Healthy children get "normal" formula Children <4mo with documented food allergy receive Nutramigen
I didn't know that Nutramigen without LGG could still be prescribed So I didn't specify my prescriptions although I meant to prescribe Nutramigen LGG because of its theoretical superiority
In advising a hypo-allergenic formula to parents I am not directive, meaning I do not mention a specific product I name the parents possible products of different companies and let them choose themselves
Just not came up with the idea
Mostly I use Nutramigen without LGG To my opinion there is no advice from the Dutch pediatric association for giving N with LGG
no need
no patients at this moment
Unknown

3. NUTRAMIGEN LGG STAGE 2

RECOMMENDATION

As with Stage 1, the majority (77%) of physicians surveyed are currently recommending Nutramigen LGG Stage 2. Few physicians (4%) indicate no longer recommending Nutramigen LGG Stage 2 although they had recommended it in the past.

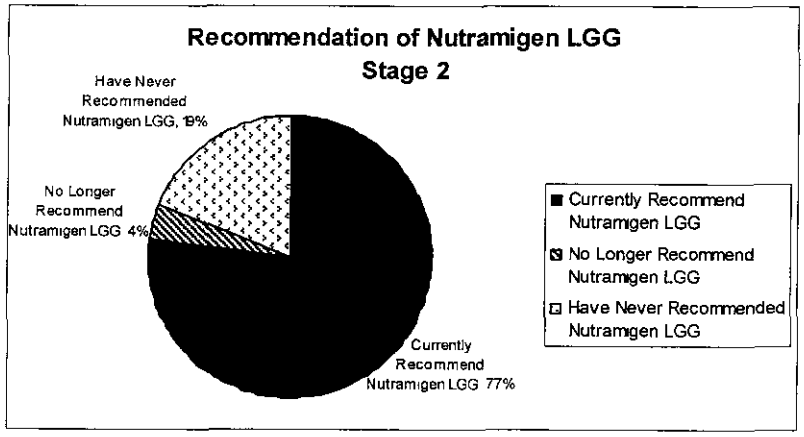

CLINICAL EXPERIENCE

On average, each physician reports recommending Nutramigen LGG Stage 2 to 26 patients over the past 24 months.

The majority of physicians recommend Nutramigen LGG Stage 2 for GI manifestations and Atopic Dermatitis. In addition, Nutramigen with LGG Stage 2 is recommended for symptoms of Infantile Colic, wheezing/asthma and urticaria. Few physicians report recommending Nutramigen LGG Stage 2 for Allergic Rhinitis. "Other" indications given for the recommendation of Nutramigen LGG Stage 2 include cow milk allergy and failure to thrive.

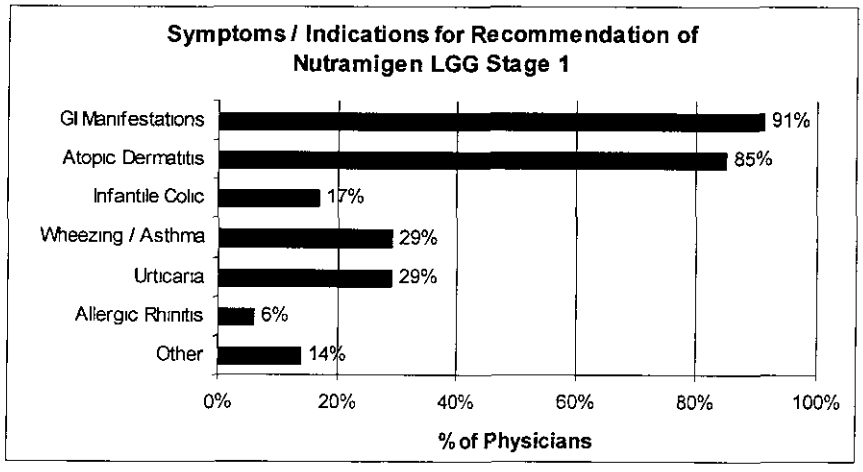

3. NUTRAMIGEN LGG STAGE 2 (continued)

CLINICAL EXPERIENCE (continued)

Forty-two percent (42%) of the physicians surveyed indicate they noted improvement in symptoms with the use of Nutramigen LGG Stage 2 beyond that offered by Nutramigen that does not contain LGG

ADVERSE EVENTS

The majority (94%) of physicians indicate they see no difference in the incidence of adverse events related to the use of Nutramigen LGG Stage 2 compared to Nutramigen that does not contain LGG.

In total, physicians report few patients (1%) experience adverse events. As offered by volunteered responses, these events involved primarily symptoms of vomiting, no improvement in symptoms, and refusal of the taste.

Adverse events experienced on Nutramigen LGG Stage 2 Among 1% of Patients Experiencing Adverse Events
Vomiting, pruritus
vomiting after feeding during the first week only
intolerance failure to improve allergic symptoms
More Colic
Persisting diarrhea -still dermatologic symptoms
Refusal of the taste
vomiting and refusal to drink it

RESPONDENTS WHO NO LONGER RECOMMEND NUTRAMIGEN LGG STAGE 2

For reasons similar to those given for not recommending Stage 1, physicians who no longer recommend LGG Stage 2 (5% of the total sample) give reasons of Nutramigen LGG Stage 2 being too expensive, no improvement compared to Nutramigen without LGG, and not treating patients within the age category for use of the Stage 2 product.

Reasons No Longer Recommending Nutramigen LGG Stage 2 Number of Physicians = 4
Because it is more expensive for the family (because of the insurance system I Sweden)
My clinical experience that Stage 2 its not better than N without LGG
Currently no patient under my care requiring stage 2 Nutramigen LGG
I couldn't see clear positive effects
no difference in GI-symptoms

3. NUTRAMIGEN LGG STAGE 2 (continued)

RESPONDENTS WHO HAVE NEVER RECOMMENDED NUTRAMIGEN LGG STAGE 2

Physicians who have never recommended Nutramigen LGG Stage 2 (19% of the total sample) express concern on the actual need and efficacy of Stage 2 and cite the lack of specific endorsement by government and/or pediatric association authorities..

Reasons Never Recommending Nutramigen LGG Stage 2 Number of Physicians = 16
No benefits compared to Nutramigen in my opinion
Not approved nor reimbursed by our Nat authorities
Not convinced it is efficient against reflux
Because in Sweden you must prescribe Nutramigen LGG as medicine and many parents find it too expensive
Have not seen patients who needed it
Healthy children >4mo use "normal" formula When a food allergy is documented, Nutramigen LGG is prescribed
I am a neonatologist and prescribe in the first weeks/months, after that mostly my paediatric colleagues take over and I only do the follow up at 1,2 and 5 yrs
just not came up the idea
No essential advantage before "old" Nutramigen
no need
No need till thus far
No specific reason The children are all using Nutramigen without LGG
I didn't know that Nutramigen without LGG could still be prescribed So I didn't specify my prescriptions although I meant to prescribe Nutramigen LGG because of its theoretical superiority
The answer is the same as in case of Nutramigen stage 1 In general I don't recommend the parents a specific product, but rather the range of products they can choose from
mostly i use Nutramigen without LGG nTo mine opinion there is no advice from the dutch pediatric association for giving N with LGG
Unknown

000195

Appendix

REASONS RECOMMEND NUTRAMIGEN

Q2b Other Symptoms Nutramigen LGG Stage 1 Is Recommended To Treat

cow milk allergy
cow milk protein allergy
failure to thrive
family history
intestinal bleeding
only if proven allergy by DBP
positive family history for atopic syndrome
Prophylactic
profylactic for atopie
Prophylaxis
antecedents Atopic
family history
intolerance lactose

Q2d Reasons for Recommending Nutramigen LGG Stage 1

it will prevent allergy in future and that atopic eczema will get better
Because there is scientific evidence for the use probiotics
Better symptoms relief
Disturbed gut flora may be part of the infants allergic reactions
Earlier occurrence of tolerance than expected
possible better stomach
Recommendations from the company and dieticians
child with GI-problems needs change of intestinal bacterial strains i e the present flora is not optimal and this gives symptoms
To prevent the allergic development
A good combination of bacteria in the gut can be worth trying
As suggested by doctors counselor
it has been promoted as better, and actually I did not know that it is still available without Igg
the beneficial effects of probiotics in the literature described
the positive effect of LGG
the theoretical advantage of the lactobacillusGG
probiotics have been proved to be effective in regulating flora of the colon
the effects of probiotics are more and more recognized
there is little evidence that probiotics = LGG have a good influence on gut and skin disease
better GE tolerance
Better results in studies
Recent data in the literature lack of effects/ support of immunological research
easy available, "old "nutramigen is not always in stock with pharmacist
GI problems or when a child also has to use antibiotics I am not sure whether in case of dermatitis LGG has more value
hope for less gastrointestinal symptoms
I advise treating cow milk allergy, because of co assisting gastro intestinal problems the probiotic Igg
I believe in probiotics because of the evidence there is at this moment
I hope there are less GI symptoms when using LGG, but the number of patients are too small to really know that
I think children need probiotics
I wish to gain experience with LGG Nutramigen especially when I am not convinced that a cow's milk protein allergy is the only cause of the patients problems
in the hope of less gastrointestinal symptoms
insight that probiotics works positive on the gastrointestinal immune system with positive effects on food allergy, diarrhea and atopic dermatitis
It is probably better, less complains about colics and other symptoms
it might be better
Lactobacillus protect the gut and - has good effect on the gut
lactobacillus stabilizes mucosa of the gut
less colics, better stools, probably better allergic pathway, better breast milk like
LGG creates a healthy intestinal flora and it helps in reducing the risk of atopic dermatitis and gastro-intestinal problems related to allergic conditions

000197

literature concerning probiotics
might be of benefit and has no ill effects
No specific answer
Nutramigen without LGG is no longer available in The Netherlands
possible effect on g i manifestations, preventing allergic complaints
Practically (stock) No other reason
Probiotics have a positive effect on the gut flora and so the prevention of other allergic manifestations
related to the indication
The studies I read are encouraging Some parents found out that their pharmacist gave + LGG without asking
The use of Probiotics seem to have an additional effect in preventing and treating symptoms related to cow milk allergy
there are enough studies that show the benefit of LGG
To improve the bacterial flora in the gut
to see if it makes any difference
to try it out
Improvement of the digestive flora
after discussion with the representative
because of published data on allergy (ref Isolauri)
Better response and faster healing
taking into account the data and recommendations of the current literature
Immunizing effect
I thought that the form without LGG did not exist any more
I thought that it there more but that one on market
The probiotic ones have a favorable effect on the intestinal flora and the Th1/Th2 balance, therefore reduce the inflammatory reaction in eczema
long term effect on neurological development - immune stimulation
better effect anti-allergic
better effect on the digestive problems and allergy prevention
possible benefit on immunity
prevention allergy, and supporting intestinal immune system
Protection plus shown effects on immunization stimulation
preventive role of probiotic in term of reduction incidence of allergic demonstrations and reduction incidence of infections (gastroenteritis)
stimulation of the immunization

REASONS RECOMMEND NUTRAMIGEN (continued)

Q6b Other Symptoms Nutramigen LGG Stage 2 Is Recommended To Treat

Failure to thrive
persistent diarrhea
adaptation 1ere age
cow milk allergy
cow milk protein allergy
cow milk allergy
Crying
failure to thrive
intolerance with the cow's milk lactose/proteins

Q6d Reasons for Recommending Nutramigen LGG Stage 2

a possible better effect on gastric symptoms
Allergy-prophylaxis
Earlier occurrence of tolerance than expected
because it has better effect over diarrhea and complicated dermatitis
Because of the scientific evidence that probiotics help
Better relief of symptoms
I have not been able to do studies to compare these two groups
Probiotic LGG is needed according my experience in severe cases of dermatitis and GI-symptoms
Probiotic may improve a disturbed gut flora Continuing diarrhea despite use of Nutramigen without probiotic Allergic and infection prone child who receives several antibiotic sessions
Recommendation to try it instead from company/dieticians
Sometimes the child with GI-problems needs a change of intestinal bacterial strains i e the present flora is not optimal and this gives symptoms
The patient had a lot of diarrhea and vomiting that became better with Nutramigen LGG
it has been promoted to be more effective
the possible positive effect on gastro intestinal problems
because the effects of probiotics are more and more recognized
probiotics have been proved to be effective in regulating the flora of the colon
better GE tolerance
Better results in studies
for the possible benefit of LGG
I hope that LGG has some good influence on the gut and immune-regulation
I've recommended both formulas
in follow up of stage 1
it might be better
It was new for me but in the future I will prescript
less colic, better stools, better allergic pathway
LGG seems to help in developing tolerance for cow's milk and other food allergens LGG is helping in restoring proper bowel function in children who suffer from allergic gastro-intestinal problems
literature concerning probiotics
no studies to my knowledge
Not so useful as for kids < 4 yrs but maybe there is some profit
Nutramigen without LGG is no longer available in The Netherlands
In the indications mentioned Nutramigen is sufficient with or without LGG
probiotics are necessary for children
Probiotics helps to normalize the gut flora, are beneficial for the immune system and probably preventive in the development of other allergic manifestations
related to indication
lactobacillus stabilizes mucosa of the gut
Same motivation as mentioned before Positive effects of probiotics on food allergy, atopic dermatitis and diarrhea
same reason, beneficial effects described in literature
Logical continuation of treatment installs for allergy to the cow's milk
because of the positive effect of LGG

I hope there are less GI symptoms, but the number of my patients is too small for any evidence
there are enough studies that show the benefit
To improve the bacterial flora in the gut
to see if it makes any difference
to try it out
treatment of symptoms related to cow milks allergy
We try to maintain consistency with feeding advice 4 months is early to categorically exclude underlying allergy as a cause, and probiotica seem to play a role in general gut health
Taking into account the publications and current recommendations of the literature!
data on allergy prevention (Isolauri)
effect on immune system
Immunizing effect
exclusion of proteins of children requiring a food diet strict in reinforcement immunizing
faster healing
I did not know that the two forms existed
Nutramigen 1 age with LGG
I thought that there was nothing any more but one kind
The probiotic ones reduce the immune reaction pro-inflammatory in eczema
better effect anti-allergic
better effect gastrointestinal anti-allergic
Better protection via LGG
No the age of stop for the probiotic ones specified in medical literature However it appears to me less indicated to stimulate the immune tolérance than LGG 1° age
possible benefit of immunity
Continuation of stage1
supporting intestinal immune system
to try it out

QUESTIONNAIRE

[PROG: ALL QUESTIONS SHOULD BE ON A SEPARATE SCREEN UNLESS OTHERWISE NOTED]

A Which language would you like to continue the survey?
Please select one
English
French **[PROG: CONTINUE THE REMAINDER OF THE SURVEY IN LANGUAGE SELECTED]**

B Please refer to the letter and enter your ID and Password
ID **[PROG: ALLOW 8 DIGITS, NUMERIC CODE, NO RANGE RESTRICTION]**
Password **[PROG: ALLOW 6 DIGITS, NUMERIC CODE, NO RANGE RESTRICTION]**

[PROG: MUST ENTER VALID ID AND PASSWORD TO CONTINUE.]

C Thank you for participating in this survey about your experience with Nutramigen LGG

You must agree to all terms and conditions if you wish to participate in the survey
By agreeing to the following terms, you consent (a) to participate in this survey and (b) to have your responses along with your name, address, contact details and bank details transferred to Synovate or another third party survey administrator within the European Union that will tabulate the responses and wire compensation for your time Your name, address, contact details and bank details will not be sent by our company outside of the European Union Synovate and/or any other third party survey company will be under contract to adhere to all applicable privacy legislation

By participating in this survey, your answers will be kept confidential and will be reported in aggregate

Please select one

I agree to all terms and conditions as indicated above
I do not agree to all terms and conditions as indicated above
[PROG: IF "DO NOT AGREE" SELECTED IN QC TERM, OTHERWISE CONTINUE WITH QD]

D You must complete the entire survey in order for you to be compensated for your time This includes answering all questions, providing accurate bank transfer information and hitting the "submit" button at the end of the survey

Please note that if for any reason you are unable to complete the survey, you may access the link at another time However, once you hit the "submit" button at the end of the survey, you will be denied further access to the survey Your survey response must be received no later than January 4, 2007 in order for you to be eligible for compensation

[PROG: ALLOW RESPONDENT TO RE-ENTER SURVEY IF NOT COMPLETED. IF SURVEY IS COMPLETE, RESPONDENT MAY NOT ENTER SURVEY AGAIN]

SECTION 1

1a The following questions will be about Nutramigen LGG Stage 1 (for infants less than 4 months of age)

1b Which of the following statements best describes your recommendation of Nutramigen LGG Stage 1 (for infants less than 4 months of age)?

Please select one

I currently recommend Nutramigen LGG Stage 1
I have recommended Nutramigen LGG Stage 1 in the past but I no longer make recommendations for Nutramigen LGG Stage 1
I have never recommended Nutramigen LGG Stage 1

[PROG: IF "I currently recommend Nutramigen LGG Stage 1" SELECTED IN Q1b CONTINUE WITH Q2a]

[PROG: IF"I have recommended Nutramigen LGG Stage 1 in the past but I no longer make recommendations for Nutramigen LGG Stage 1" SELECTED IN Q1b CONTINUE WITH Q3a]

[PROG: IF "I have never recommended Nutramigen LGG Stage 1" SELECTED IN Q1b CONTINUE WITH Q4]

SECTION 2

[PROG: IF "I currently recommend Nutramigen LGG Stage 1" SELECTED IN Q1b CONTINUE WITH Q2a, OTHERWISE CHECK INSTRUCTION BEFORE Q3a]

2a Within the past 24 months, how many infant patients in your practice have consumed Stage 1 Nutramigen LGG?

_____ Number of patients

[PROG: DO NOT ACCEPT A RANGE. ACCEPTABLE RESPONSE 1- 9999]

2b For what symptoms or indications do you recommend Nutramigen LGG Stage 1 (for infants less than 4 months of age)? Please select all that apply

Atopic Dermatitis
Urticaria
Wheezing or asthma
Allergic Rhinitis
GI Manifestations (vomit, reflux, diarrhea, colitis, entercolitis, esophagitis, others)
Infantile Colic
Other **(Specify)** _____

2c Have you noted any improvement in those symptoms with the use of Nutramigen LGG Stage 1, when compared to Nutramigen without LGG? Please select one

YES
NO

2d Why do you recommend Stage 1 Nutramigen with LGG instead of Nutramigen that does not contain the probiotic LGG? Please be as specific as possible

[PROG: MANDATORY OPEN END]

2e Have you noted any difference in the incidence of adverse events related to the use of Nutramigen LGG Stage 1, when compared to Nutramigen without LGG? Please select one

YES
NO

2f What percentage of your patients, if any, consuming Nutramigen LGG Stage 1 have experienced adverse events?

(Your responses must add to 100%)

_____ % Have NOT experienced an adverse event
_____ % Have experienced adverse events

[PROG: DO NOT ACCEPT A RANGE. ACCEPTABLE RESPONSE 0%- 100%. TOTAL MUST ADD TO 100%]

[PROG: IF GREATER THAN 0% "HAVE EXPERIENCED ADVERSE EVENTS" IN Q2f THEN ASK Q2g, OTHERWISE CONTINUE WITH Q5a]

2g What types of adverse events have your patients experienced when using Nutramigen LGG Stage 1?

[PROG: MANDATORY OPEN END]

[PROG: AFTER COMPLETING Q2g, CONTINUE WITH Q5a]

SECTION 3

[PROG: IF"I have recommended Nutramigen LGG Stage 1in the past but I no longer make recommendations for Nutramigen LGG Stage 1" SELECTED IN Q1b CONTINUE WITH Q3a, OTHERWISE CHECK INSTRUCTION BEFORE Q4]

3a Within the past 24 months, how many infant patients in your practice have consumed Stage 1 Nutramigen LGG?

_____ Number of patients

[PROG: DO NOT ACCEPT A RANGE. ACCEPTABLE RESPONSE 1- 9999]

3b Why do you no longer recommend Stage 1 Nutramigen LGG (for infants less than 4 months of age)? Please be as specific as possible

[PROG: MANDATORY OPEN END]

3c Have you noted any difference in the incidence of adverse events related to the use of Nutramigen LGG Stage 1, when compared to Nutramigen without LGG? Please select one

YES

NO

3d What percentage of your patients, if any, consuming Nutramigen LGG Stage 1 have experienced adverse events?

(Your responses must add to 100%)

_____ % Have NOT experienced an adverse event

_____ % Have experienced adverse events

[PROG: DO NOT ACCEPT A RANGE. ACCEPTABLE RESPONSE 0%- 100%. TOTAL MUST ADD TO 100%]

[PROG: IF GREATER THAN 0% "HAVE EXPERIENCED ADVERSE EVENTS" IN Q3d THEN ASK Q3e, OTHERWISE CONTINUE WITH Q5a]

3e What types of adverse events have your patients experienced when using Nutramigen LGG Stage 1?

[PROG: MANDATORY OPEN END]

[PROG: AFTER COMPLETING Q3e, CONTINUE WITH Q5a]

SECTION 4

[PROG: IF "I have never recommended Stage 1 Nutramigen LGG" SELECTED IN Q1b CONTINUE WITH Q4 OTHERWISE CONTINUE WITH Q5a]

4 Why have you never recommended Nutramigen LGG, Stage 1 (for infants less than 4 months of age)? Please be as specific as possible

[PROG: MANDATORY OPEN END]

SECTION 5

[PROG: ASK ALL]

5a The following questions will be about Nutramigen LGG Stage 2 (for infants older than 4 months of age)

5b Which of the following statements best describes your recommendation of Nutramigen LGG Stage 2 (for infants older than 4 months of age)? Please select one

I currently recommend Nutramigen LGG Stage 2
I have recommended Nutramigen LGG Stage 2 in the past but I no longer make recommendations for Nutramigen LGG Stage 2
I have never recommended Nutramigen LGG Stage 2

[PROG: IF "I currently recommend Nutramigen LGG Stage 2" SELECTED IN Q5b CONTINUE WITH Q6a]

[PROG: IF"I have recommended Nutramigen LGG Stage 2 in the past but I no longer make recommendations for Nutramigen LGG Stage 2" SELECTED IN Q5b CONTINUE WITH Q7a]

[PROG: IF "I have never recommended Nutramigen LGG Stage 2" SELECTED IN Q5b CONTINUE WITH Q8]

SECTION 6

[PROG: IF "I currently recommend Nutramigen LGG Stage 2" SELECTED IN Q5b CONTINUE WITH Q6a, OTHERWISE CHECK INSTRUCTION BEFORE Q7a]

6a Within the past 24 months, how many infant patients in your practice have consumed Stage 2 Nutramigen LGG?

_____ Number of patients

[PROG: DO NOT ACCEPT A RANGE. ACCEPTABLE RESPONSE 1- 9999]

6b For what symptoms or indications do you recommend Nutramigen LGG Stage 2 (for infants older than 4 months of age)? Please select all that apply
Atopic Dermatitis
Urticaria
Wheezing or asthma
Allergic Rhinitis
GI Manifestations (vomit, reflux, diarrhea, colitis, entercolitis, esophagitis, others)
Infantile Colic
Other (**Specify**) _____

6c Have you noted any improvement in those symptoms with the use of Nutramigen LGG Stage2, when compared to Nutramigen without LGG? Please select one
YES
NO

6d Why do you recommend Stage 2 Nutramigen with LGG instead of Nutramigen that does not contain the probiotic LGG? Please be as specific as possible

[PROG: MANDATORY OPEN END]

6e Have you noted any difference in the incidence of adverse events related to the use of Nutramigen LGG Stage 2, when compared to Nutramigen without LGG? Please select one
YES
NO

6f What percentage of your patients, if any, consuming Nutramigen LGG Stage 2 have experienced adverse events?

(Your responses must add to 100%)

_____ % Have NOT experienced an adverse event
_____ % Have experienced adverse events

[PROG: DO NOT ACCEPT A RANGE. ACCEPTABLE RESPONSE 0%- 100%. TOTAL MUST ADD TO 100%]

[PROG: IF GREATER THAN 0% "HAVE EXPERIENCED ADVERSE EVENTS" IN Q6f THEN ASK Q6g, OTHERWISE CONTINUE WITH Q9a]

6g What types of adverse events have your patients experienced when using Nutramigen LGG Stage 2?

[PROG: MANDATORY OPEN END]

[PROG: AFTER COMPLETING Q6g, CONTINUE WITH Q9a]

SECTION 7

[PROG: IF"I have recommended Nutramigen LGG Stage 2 in the past but I no longer make recommendations for Nutramigen LGG Stage 2" SELECTED IN Q5b CONTINUE WITH Q7a OTHERWISE CHECK INSTRUCTION BEFORE Q8]

7a Within the past 24 months, how many infant patients in your practice have consumed Stage 2 Nutramigen LGG?

_____ Number of patients

[PROG: DO NOT ACCEPT A RANGE. ACCEPTABLE RESPONSE 1- 9999]

7b Why do you no longer recommend Stage 2 Nutramigen LGG (for infants older than 4 months of age)? Please be as specific as possible

[PROG: MANDATORY OPEN END]

7c Have you noted any difference in the incidence of adverse events related to the use of Nutramigen LGG Stage 2, when compared to Nutramigen without LGG? Please select one

YES

NO

7d What percentage of your patients, if any, consuming Nutramigen LGG Stage 2 have experienced adverse events?

(Your responses must add to 100%)

_____ % Have NOT experienced an adverse event

_____ % Have experienced adverse events

[PROG: DO NOT ACCEPT A RANGE. ACCEPTABLE RESPONSE 0%- 100%. TOTAL MUST ADD TO 100%]

[PROG: IF GREATER THAN 0% "HAVE EXPERIENCED ADVERSE EVENTS" IN Q7d THEN ASK Q7e, OTHERWISE CONTINUE WITH Q9a]

7e What types of adverse events have your patients experienced when using Nutramigen LGG Stage 2?

[PROG: MANDATORY OPEN END]

[PROG: AFTER COMPLETING Q7e, CONTINUE WITH Q9a]

SECTION 8

[PROG: IF "I have never recommended Nutramigen LGG Stage 2" SELECTED IN Q5b CONTINUE WITH Q8, OTHERWISE CONTINUE WITH Q9a]

8 Why have you never recommended Nutramigen LGG, Stage 2 (for infants older than 4 months of age)? Please be as specific as possible

[PROG: MANDATORY OPEN END]

SECTION 9

[PROG: ASK ALL]

9a What is your specialty? Please select one
General paediatrician
Pediatric Gastroenterologist
Pediatric Allergist
Other **(Specify)** _____)

9b How many years have you been in practice?
_____ Number of years in practice
[PROG: DO NOT ACCEPT A RANGE. ACCEPTABLE RESPONSE 1- 999]

9c Approximately how many patients under one year of age do you personally see during a 12 month period?
_____ Number of patients under one year of age
[PROG: DO NOT ACCEPT A RANGE. ACCEPTABLE RESPONSE 1- 9999]

9d Synovate is required to make payments for this survey by bank transfer Accordingly, please provide your office bank payment instructions here, including the following as applicable The bank draft will be deposited in your office account within 6 weeks

Account Name **[PROG: ALLOW ALPHA NUMERIC CODE, NO RANGE RESTRICTION]**
IBAN Number **[PROG: ALLOW 34 DIGIT, ALPHA-NUMERIC CODE, NO RANGE RESTRICTION]**
BIC (bank code) **[PROG: ALLOW 8 DIGIT or 11 DIGIT, ALPHA-NUMERIC CODE, NO RANGE RESTRICTION]**
Bank Name **[PROG: ALLOW ALPHA CODE, NO RANGE RESTRICTION]**
Bank Street and Number **[PROG: ALLOW ALPHA NUMERIC CODE , NO RANGE RESTRICTION]**
Bank Postal Code and City **[PROG: ALLOW ALPHA NUMERIC CODE , NO RANGE RESTRICTION]**
Bank Country **[PROG: ALLOW ALPHA CODE, NO RANGE RESTRICTION]**

9e If you have questions, regarding this survey, or your payment Please contact lggsurvey@Synovate net
Thank you for completing this survey
Submit
[PROG: INCLUDE "SUBMIT" BUTTON AT END OF SURVEY]

LETTER

[Date]

[Address of doctor]

Dear Dr. _____,

We are contacting medical professionals such as yourself to obtain their opinion and experience with the use of Nutramigen LGG infant formula. Specifically, we are requesting your participation in a survey. Your participation is very important to us and will help Mead Johnson obtain direct information that otherwise would be very difficult to access. Mead Johnson will compensate you for your time as described below.

If you wish to participate, please log onto http://www.synovate.net/lggsurvey.

Please enter the ID and password below to access the survey. To report any technical difficulties with the Web site or if you have questions regarding this study, please send an email to lggsurvey@synovate.net.

ID: xxxxxxxx
Password: xxxxxx

Synovate will combine the answers from all responding medical professionals and will provide us a report that does not reveal your identity. Synovate is under obligation to respect all applicable privacy legislation and will not contact you except to verify your address or payment instructions.

For your participation in this survey, Mead Johnson will pay amounts consistent with applicable ethical standards. The amounts are based on assumptions regarding the time it will take to complete the applicable portions of the survey and to review selective medical records, if needed.

Mead Johnson will pay 25 Euros for responses from doctors who have never prescribed Nutramigen LGG. Mead Johnson will pay current and previous prescribers of Nutramigen LGG 50 Euros as more time will be necessary to complete the survey and review selective medical records. Your survey response must be received no later than January 4, 2007 in order for you to be eligible for this payment.

Payment will be made to your office bank account by Synovate. Please provide your bank details in the space provided at the end of the survey.

Sincerely,

Carlos H Lifschitz, MD
MJN Medical Director for Europe

REMINDER LETTER

[Date]

[Address of doctor]

Dear Dr. _____,

Recently we sent you a letter asking for your participation in a survey regarding your experience with the use of Nutramigen LGG infant formula. This is a friendly reminder to log onto the link below if you haven't already done so. If you have already completed the survey, we sincerely thank you.

We are contacting medical professionals such as yourself to obtain their opinion and experience with the use of Nutramigen LGG infant formula. Specifically, we are requesting your participation in a survey. Your participation is very important to us and will help Mead Johnson obtain direct information that otherwise would be very difficult to access. Mead Johnson will compensate you for your time as described below.

If you wish to participate, please log onto http://www.synovate.net/lggsurvey.

Please enter the ID and password below to access the survey. To report any technical difficulties with the Web site or if you have questions regarding this study, please send an email to lggsurvey@synovate.net.

ID: xxxxxxxx
Password: xxxxxx

Synovate will combine the answers from all responding medical professionals and will provide us a report that does not reveal your identity. Synovate is under obligation to respect all applicable privacy legislation and will not contact you except to verify your address or payment instructions.

For your participation in this survey, Mead Johnson will pay amounts consistent with applicable ethical standards. The amounts are based on assumptions regarding the time it will take to complete the applicable portions of the survey and to review selective medical records, if needed.

Mead Johnson will pay 25 Euros for responses from doctors who have never prescribed Nutramigen LGG. Mead Johnson will pay current and previous prescribers of Nutramigen LGG 50 Euros as more time will be necessary to complete the survey and review selective medical records. Your survey response must be received no later than January 4, 2007 in order for you to be eligible for this payment.

Payment will be made to your office bank account by Synovate. Please provide your bank details in the space provided at the end of the survey.

Sincerely,

Carlos H Lifschitz, MD
MJN Medical Director for Europe

C

CONCLUSION OF THE EXPERT PANEL: GENERALLY RECOGNIZED AS SAFE (GRAS) DETERMINATION FOR THE USE OF *LACTOBACILLUS CASEI* SSP. *RHAMNOSUS* STRAIN GG IN EXEMPT INFANT FORMULA

Prepared for:

Mead Johnson Nutritionals
Evansville Indiana

November 2006

CONCLUSION OF THE EXPERT PANEL: GENERALLY RECOGNIZED AS SAFE (GRAS) DETERMINATION FOR THE USE OF *LACTOBACILLUS CASEI* SSP. *RHAMNOSUS* STRAIN GG IN EXEMPT INFANT FORMULA

We, the members of the expert panel, are qualified by scientific training and experience to evaluate the safety of food ingredients, including probiotic microorganisms. We have individually and collectively critically evaluated the publicly available information on the proposed use of *Lactobacillus casei* ssp. *rhamnosus* strain GG (LGG) in exempt infant formula summarized in supporting documentation prepared by Hogan & Hartson, as well as other material deemed appropriate or necessary. Our evaluation included review of the starting materials, production methods, and genetic stability of LGG, the effects of LGG on the gastrointestinal and immune systems; the history of apparent safe use of lactic acid bacteria, the genus *Lactobacillus*, and the specific strain LGG; and the apparent safety of administering LGG to newborn infants. Our summary and conclusion resulting from this critical evaluation are presented below.

Summary

- The organism that is the subject of this generally recognized as safe (GRAS) determination is strain GG of the probiotic bacterium *Lactobacillus caseii* ssp. *rhamnosus*, designated LGG. LGG, a gram-positive bacterium that is a member of the broad classification of lactic acid bacteria (LAB), was isolated in 1985 by Drs. Gorbach and Goldin of Tufts University from the intestinal biota of a healthy human. It is a patented strain deposited in the American Type Culture Collection as ATCC 53103 In 1987, Valio, Ltd., of Helsinki Finland received an exclusive license to manufacture, market, and distribute LGG. The production process is well controlled and consistently produces food-grade freeze-dried LGG powder containing at least 3×10^{11} cfu/g of viable LGG. The genetic stability of LGG is assured by a cell banking system and periodic testing by Valio.

- LAB are ubiquitous in the intestinal epithelium and the gastrointestinal tract of humans of all ages. Most LAB strains, including LGG, are considered commensal microorganisms with little pathogenic potential. LAB have a long history of use in fermented and non-fermented foods, leading to the reasonable conclusion that most LAB strains are generally safe for use in food, including infant formula. LAB, particularly bifidobacteria and lactobacilli, dominate the biota of breast-fed infants, while formula-fed infants have a more diverse biota that more frequently resembles that of adults.

- The genus of LGG, *Lactobacillus*, is a non-pathogenic genus of bacteria that consists of over 50 species Lactobacilli grow under reduced oxygen conditions in habitats where ample nutrients exist and are used in commercial applications for the fermentation of dairy products, fruits, vegetables, and meats. Some *Lactobacillus* strains are found in the

gastrointestinal tract of healthy humans of all ages. The long history of apparent safe use of this genus provides evidence that there is little risk associated with its ingestion by humans.

- LGG is among the most extensively studied probiotic bacteria, and is known to be generally nonpathogenic and nontoxigenic. In clinical trials, LGG has been ingested with no evidence of harm at doses of 10^8-10^{10} cfu/day for up to 15 months by healthy neonates, infants, and children and by individuals compromised by low birth weight, allergic symptoms, or acute diarrhea. Indeed, LGG appears to confer possible beneficial effects with respect to allergic symptoms and other end points investigated.

- It is intended to add LGG powder to Nutramigen® powder at a level of 333.3 ppm (33.3 mg/100 g) to produce the product Nutramigen® LIPIL LGG. This addition level provides 10^8 cfu LGG/g powdered formula and ensures a minimum concentration of 10^6 cfu/g throughout the 12-18-month shelf life of the formula. With normal dilution of the powdered formula in water, and average daily consumption of 800 ml formula, the intake of LGG is by infants is expected to be within the range 10^8-10^9 cfu LGG/day.

- The LGG-containing formula, Nutramigen® LIPIL LGG, is a specialty infant formula, sold in powdered form, intended for use under the supervision of a physician for the dietary management of food allergies and allergic symptoms.

- Since LGG powder contains an average of 40% sucrose (which is 50% fructose), the carbohydrate content of Nutramigen® is reduced by 133 ppm to compensate. The 90th percentile estimated intake of fructose from Nutramigen® LGG is 1.9 mg/kg bw/day, which is well within levels of fructose that are tolerated with no ill effects by individuals with hereditary fructose intolerance.

- Over the past two decades, LGG has been incorporated in a variety of food products consumed around the world, including in the U.S. Nutramigen® LGG has been sold in the European Union since 2003; through 2005 approximately 52,000 infants have been fed this formula, accumulating over 8,000,000 days of consumption with no adverse events reported due to consumption of Nutramigen® LGG. Most of these infants received Nutramigen® LGG under the supervision of a physician, thus increasing the likelihood that any adverse events would have been observed and reported.

- Studies in both healthy and severely immunocompromised animals have found no evidence of bacteremia, other indications of infectivity, or LGG-induced toxicity due to short-term feeding of LGG at levels as high as 5 x10^{10} cfu/day.

- Seven studies of LGG in term and preterm human infants have found no evidence of adverse effects from administration of up to 10^{10} cfu/day over periods as long as six months, and no effects on formula consumption, stool consistency, flatulence, abdominal distension, vomiting,or fussiness There was no interference with normal growth as measured by weight, length, and head circumference. No incidents of LGG infection were observed in any of these studies.

- Although it has been shown that LGG can adhere to intestinal surfaces, both *in vitro* and animal studies have indicated that LGG does not degrade intestinal mucins, nor does it appear to be capable of binding to or aggregating blood platelets. LGG may inhibit translocation of intestinal pathogens. Although translocation of LGG itself has been only rarely observed in controlled studies, the possibility of such translocation suggests caution in administering LGG-containing products to certain compromised infant populations, including those with impaired immunocompetence, heart defects, or central lines.

- Like other lactobacilli, LGG is intrinsically resistant to vancomycin, as well as to several other important pediatric antibiotics including gentamicin, trimethoprim-sulfamethoxazole, and metronidazole. However, it is sensitive to other pediatric antibiotics including ampicillin, penicillin G, and erythromycin. Further, since LGG has no plasmids, its capability to transfer any type of antibiotic resistance to pathogenic bacteria is low.

- In an unpublished analysis, the complete genome of LGG was sequenced, revealing a genome of predicted size 2.84 mb in 532 contigs, containing 2,405 potential genes. Computerized and manual reviews identified no genes that would suggest significant virulence elements other than two putative hemolysin genes that have been identified in other lactobacillus species. No analogue to any characterized vancomycin gene was found, corroborating previously published conclusions that LGG's known vancomycin resistance is an inherent property of its cell wall and thus not transferable.

Conclusion

We, the undersigned expert panel members, have individually and collectively critically evaluated the information summarized above.

We conclude that *Lactobacillus casei*, ssp. *rhamnosus* strain GG (LGG) is a well characterized probiotic bacterium that is a member of a genus with a long history of safe ingestion by humans. The manufacturing controls in the production of freeze-dried powder containing LGG ensure that it is a food-grade and genetically stabile product. Although LGG powder contains fructose, the quantity provided is well within the tolerance limits of individuals with hereditary fructose intolerance. Extensive *in vitro*, animal, and human research has found no evidence of pathogenicity, mucin degradation, toxic metabolic products, or transfer of antibiotic resistance. Therefore, there is a reasonable certainty of no harm from the proposed addition of LGG powder to infant formula for use under the supervision of a physician.

It is also our opinion that other individuals qualified by scientific training and experience reviewing the same publicly available information would reach the same conclusion. Therefore, the powder containing *Lactobacillus casei*, ssp. *rhamnosus* strain GG (LGG), manufactured by Valio, Ltd., is generally recognized as safe (GRAS) by scientific proceduresfor use under the supervision of a physician as a source of LGG in formula intended for term infants from time of birth.

Dennis M. Bier, M.D
Baylor College of Medicine
Houston Texas, USA

Signature:

Date: 11/20/06

Michael P. Doyle, Ph.D.
University of Georgia
Griffin Georgia, USA

Signature: _____

Date: _____

Joseph F. Borzelleca, Ph.D.
Virginia Commonwealth University
Richmond Virginia, USA

Signature: _____

Date: _____

Berthold Koletzko, M.D.
University of Munich
Munich, Germany

Signature: _____

Date: _____

Roger A. Clemens, Dr.P.H.
University of Southern California
Los Angeles California, USA

Signature: _____

Date: _____

Daniel J. O'Sullivan, Ph.D.
University of Minnesota
St. Paul Minnesota, USA

Signature: _____

Date: _____

Conclusion

We, the undersigned expert panel members, have individually and collectively critically evaluated the information summarized above.

We conclude that *Lactobacillus casei, ssp. rhamnosus* strain GG (LGG) is a well characterized probiotic bacterium that is a member of a genus with a long history of safe ingestion by humans. The manufacturing controls in the production of freeze-dried powder containing LGG ensure that it is a food-grade and genetically stabile product. Although LGG powder contains fructose, the quantity provided is well within the tolerance limits of individuals with hereditary fructose intolerance. Extensive *in vitro*, animal, and human research has found no evidence of pathogenicity, mucin degradation, toxic metabolic products, or transfer of antibiotic resistance. Therefore, there is a reasonable certainty of no harm from the proposed addition of LGG powder to infant formula for use under the supervision of a physician.

It is also our opinion that other individuals qualified by scientific training and experience reviewing the same publicly available information would reach the same conclusion. Therefore, the powder containing *Lactobacillus casei, ssp. rhamnosus* strain GG (LGG), manufactured by Valio, Ltd., is generally recognized as safe (GRAS) by scientific proceduresfor use under the supervision of a physician as a source of LGG in formula intended for term infants from time of birth.

Dennis M. Bier, M.D
Baylor College of Medicine
Houston Texas, USA

Signature: _____

Date: _____

Michael P. Doyle, Ph.D.
University of Georgia
Griffin Georgia, USA

Signature: _____

Date: _____

Joseph F. Borzelleca, Ph.D.
Virginia Commonwealth University
Richmond Virginia, USA

Signature

Date: 11 November 2006

Berthold Koletzko, M.D.
University of Munich
Munich, Germany

Signature: _____

Date: _____

Roger A. Clemens, Dr.P.H.
University of Southern California
Los Angeles California, USA

Signature: _____

Date: _____

Daniel J. O'Sullivan, Ph.D.
University of Minnesota
St. Paul Minnesota, USA

Signature: _____

Date: _____

Conclusion

We, the undersigned expert panel members, have individually and collectively critically evaluated the information summarized above

We conclude that *Lactobacillus casei,* ssp. *rhamnosus* strain GG (LGG) is a well characterized probiotic bacterium that is a member of a genus with a long history of safe ingestion by humans. The manufacturing controls in the production of freeze-dried powder containing LGG ensure that it is a food-grade and genetically stabile product. Although LGG powder contains fructose, the quantity provided is well within the tolerance limits of individuals with hereditary fructose intolerance. Extensive *in vitro*, animal, and human research has found no evidence of pathogenicity, mucin degradation, toxic metabolic products, or transfer of antibiotic resistance. Therefore, there is a reasonable certainty of no harm from the proposed addition of LGG powder to infant formula for use under the supervision of a physician.

It is also our opinion that other individuals qualified by scientific training and experience reviewing the same publicly available information would reach the same conclusion. Therefore, the powder containing *Lactobacillus casei,* ssp. *rhamnosus* strain GG (LGG), manufactured by Valio, Ltd., is generally recognized as safe (GRAS) by scientific proceduresfor use under the supervision of a physician as a source of LGG in formula intended for term infants from time of birth.

Dennis M. Bier, M.D
Baylor College of Medicine
Houston Texas, USA

Signature: _____

Date: _____

Michael P. Doyle, Ph.D.
University of Georgia
Griffin Georgia, USA

Signature: _____

Date: _____

Joseph F. Borzelleca, Ph.D.
Virginia Commonwealth University
Richmond Virginia, USA

Signature: _____

Date: _____

Berthold Koletzko, M.D.
University of Munich
Munich, Germany

Signature: _____

Date: _____

Roger A. Clemens, Dr.P.H.
University of Southern California
Los Angeles California. USA

Signature. _____

Date: November 9, 2006

Daniel J. O'Sullivan, Ph.D.
University of Minnesota
St. Paul Minnesota, USA

Signature: _____

Date : _____

Conclusion

We, the undersigned expert panel members, have individually and collectively critically evaluated the information summarized above.

We conclude that *Lactobacillus casei,* ssp. *rhamnosus* strain GG (LGG) is a well characterized probiotic bacterium that is a member of a genus with a long history of safe ingestion by humans. The manufacturing controls in the production of freeze-dried powder containing LGG ensure that it is a food-grade and genetically stabile product. Although LGG powder contains fructose, the quantity provided is well within the tolerance limits of individuals with hereditary fructose intolerance. Extensive *in vitro,* animal, and human research has found no evidence of pathogenicity, mucin degradation, toxic metabolic products, or transfer of antibiotic resistance. Therefore, there is a reasonable certainty of no harm from the proposed addition of LGG powder to infant formula for use under the supervision of a physician.

It is also our opinion that other individuals qualified by scientific training and experience reviewing the same publicly available information would reach the same conclusion. Therefore, the powder containing *Lactobacillus casei,* ssp. *rhamnosus* strain GG (LGG), manufactured by Valio, Ltd., is generally recognized as safe (GRAS) by scientific proceduresfor use under the supervision of a physician as a source of LGG in formula intended for term infants from time of birth.

Dennis M. Bier, M.D
Baylor College of Medicine
Houston Texas, USA

Signature: _____

Date: _____

Michael P. Doyle, Ph.D.
University of Georgia
Griffin Georgia, USA

Signatur

Date. November 10, 2006

Joseph F. Borzelleca, Ph.D.
Virginia Commonwealth University
Richmond Virginia, USA

Signature: _____

Date: _____

Berthold Koletzko, M.D
University of Munich
Munich, Germany

Signature: _____

Date: _____

Roger A. Clemens, Dr.P.H.
University of Southern California
Los Angeles California, USA

Signature: _____

Date: _____

Daniel J. O'Sullivan, Ph.D.
University of Minnesota
St Paul Minnesota, USA

Signature _____

Date: _____

Conclusion

We, the undersigned expert panel members, have individually and collectively critically evaluated the information summarized above.

We conclude that *Lactobacillus casei,* ssp. *rhamnosus* strain GG (LGG) is a well characterized probiotic bacterium that is a member of a genus with a long history of safe ingestion by humans. The manufacturing controls in the production of freeze-dried powder containing LGG ensure that it is a food-grade and genetically stabile product. Although LGG powder contains fructose, the quantity provided is well within the tolerance limits of individuals with hereditary fructose intolerance. Extensive *in vitro,* animal, and human research has found no evidence of pathogenicity, mucin degradation, toxic metabolic products, or transfer of antibiotic resistance. Therefore, there is a reasonable certainty of no harm from the proposed addition of LGG powder to infant formula for use under the supervision of a physician.

It is also our opinion that other individuals qualified by scientific training and experience reviewing the same publicly available information would reach the same conclusion. Therefore, the powder containing *Lactobacillus casei,* ssp. *rhamnosus* strain GG (LGG), manufactured by Valio, Ltd., is generally recognized as safe (GRAS) by scientific proceduresfor use under the supervision of a physician as a source of LGG in formula intended for term infants from time of birth.

Dennis M. Bier, M.D
Baylor College of Medicine
Houston Texas, USA

Signature: _____

Date: _____

Michael P. Doyle, Ph.D.
University of Georgia
Griffin Georgia, USA

Signature: _____

Date: _____

Joseph F. Borzelleca, Ph.D.
Virginia Commonwealth University
Richmond Virginia, USA

Signature: _____

Date: _____

Berthold Koletzko, M.D.
University of Munich
Munich, Germany

Signature

Date: _____

Roger A. Clemens, Dr.P.H.
University of Southern California
Los Angeles California, USA

Signature: _____

Date: _____

Daniel J. O'Sullivan, Ph.D.
University of Minnesota
St. Paul Minnesota, USA

Signature: _____

Date: _____

Conclusion

We, the undersigned expert panel members, have individually and collectively critically evaluated the information summarized above.

We conclude that *Lactobacillus casei*, ssp. *rhamnosus* strain GG (LGG) is a well characterized probiotic bacterium that is a member of a genus with a long history of safe ingestion by humans. The manufacturing controls in the production of freeze-dried powder containing LGG ensure that it is a food-grade and genetically stable product. Although LGG powder contains fructose, the quantity provided is well within the tolerance limits of individuals with hereditary fructose intolerance. Extensive *in vitro*, animal, and human research has found no evidence of pathogenicity, mucin degradation, toxic metabolic products, or transfer of antibiotic resistance. Therefore, there is a reasonable certainty of no harm from the proposed addition of LGG powder to infant formula for use under the supervision of a physician.

It is also our opinion that other individuals qualified by scientific training and experience reviewing the same publicly available information would reach the same conclusion. Therefore, the powder containing *Lactobacillus casei*, ssp. *rhamnosus* strain GG (LGG), manufactured by Valio, Ltd., is generally recognized as safe (GRAS) by scientific proceduresfor use under the supervision of a physician as a source of LGG in formula intended for term infants from time of birth.

Dennis M. Bier, M.D
Baylor College of Medicine
Houston Texas, USA

Signature: _____

Date: _____

Michael P. Doyle, Ph.D.
University of Georgia
Griffin Georgia, USA

Signature: _____

Date: _____

Joseph F. Borzelleca, Ph.D.
Virginia Commonwealth University
Richmond Virginia, USA

Signature: _____

Date: _____

Berthold Koletzko, M.D.
University of Munich
Munich, Germany

Signature: _____

Date: _____

Roger A. Clemens, Dr.P.H.
University of Southern California
Los Angeles California, USA

Signature: _____

Date: _____

Daniel J. O'Sullivan, Ph.D.
University of Minnesota
St. Paul Mi

Signature:

Date: _____

SUBMISSION END

AM

Subject: Clarifications GRN #231
From: Evelyn Brady <evelyn.brady@bms.com>
Date: Wed, 02 Jan 2008 09:47:33 -0600
To: "Ramos-Valle, Moraima" <moraima.ramos-valle@fda.hhs.gov>, "Gaynor, Paulette M" <paulette.gaynor@fda.hhs.gov>, Matias R Diez <matias.diez@bms.com>

Moraima, thank you for your note of November 28th regarding the clarifications needed for GRN # 231.

Below I have responded to each of your comments. Also as discussed, I have attached the files for each page that needs to be replaced in the file.

1. On page 28 –"The method of hydrolysis for whey protein substrates used to grow LGG is not known". Please either provide the method of manufacture or explain why is not known.

   In response to this question regarding the method of hydrolysis for whey protein substrates used to grow LGG, it is true that Mead Johnson does not know the exact process used because the method is proprietary to the supplier. The ingredient however does meet the FCC criteria for partially hydrolyzed protein which states, "They are composed of peptides and polypeptides resulting from the partial or incomplete hydrolysis of peptide bonds present in edible proteinaceous materials catalyzed by heat, food-grade proteolytic enzymes, and/or suitable food grade acids" [ref]. Regardless of the process used to generate the whey permeate, the enzyme used or the end products generated are unlikely to survive fermentation during LGG growth or cause allergenicity in infants. In addition, following fermentation, LGG is concentrated by ultra filtration and thoroughly washed with sterile water to remove impurities including potential residual milk proteins. In order to further demonstrate the lack of allergenicity of LGG, Mead Johnson performed a double blind placebo controlled food challenge trial in 29 confirmed milk allergic study participants. All participants were challenged with LGG and no reactions were observed.

   Institute of Medicine of the National Academies. Food Chemicals Codex. (Fifth Edition), 2004. Partially Hydrolyzed Proteins (319-321)., The National Academies Press, Washington, D.C.

2. On pages 32-33- there are some diagrams that state at the bottom "Confidential-MJN Proprietary information." It does not appear that there is anything confidential in the diagrams. If that is the case, please provide new pages without the confidential markings.

   Updated pages 32-33 have been provided to remove the "Confidential-MJN Proprietary information" comment.

3. On pages 154-155, 167 (Appendix A) - "Confidential." It does not appear that there is anything confidential in the diagrams. If that is the case, please provide new pages without the confidential markings.

   Updated pages 154-155 has been provided to remove the "Confidential" comment.

4. On pages 175-177 (Appendix E) - the gel pictures do not have the molecular marker size identified. We notice that the gel pictures include dashes representing the molecular weights,

000225

but do not indicate the molecular weights. Please provide updated pages, including the molecular weights.

Updated pages for 175-177 have bee provided in the attached file showing the molecular weights.

5. Intended use:

   A. Is LGG intended to be added to milk-based formula? No

   B. Is LGG intended to be added to amino acid-based formula? No

   C. There were some statements throughout GRN 231 that the ingredient is intended to be added to Nutramigen LIPIL formula (page-1 first paragraph and page 4 last paragraph) and there are more generic intended uses (page 3- first paragraph, page 4- second paragraph, page 5- first paragraph and page 17 states- "....is GRAS for use under the supervision of a physician in infant formula intended for term infants from time of birth.") As per our discussion on 11/19/2007, it appears that the intended use is in Nutramigen LIPIL; please clarify the intended use and please suggest a generic description of the formula type that can substitute for the trade name Nutramigen LIPIL.

The Nutramigen Lipil trade name has been replaced accordingly through-out the document with a more generic description of the formula type.

The description will now be "Exempt Hypoallergenic Infant Formula Powder with extensively hydrolyzed casein and without MCT oil with DHA & ARA.

I have sent to you hard copies of the documents attached by Federal Express. You should be receiving them within the next few days. If you have any questions, please feel free to contact me.

Sincerely,

Evelyn A. Brady

Evelyn A. Brady <evelyn.brady@bms.com>
Technical Manager
Regulatory Affairs
Mead Johnson Company

FDA LGG Response.pdf	**Content-Type:** application/pdf **Content-Encoding:** base64

000226

I. GRAS Exemption Claim

Pursuant to the criteria provided in proposed 21 CFR 170.36 (62 FR 18938; April 17, 1997; *Substances Generally Recognized as Safe (GRAS)*; the GRAS proposal), Mead Johnson & Company (MJ) hereby notifies the Food and Drug Administration that the use of *Lactobacillus* GG (LGG) in Exempt Hypoallergenic Infant Formula powder with Extensively Hydrolyzed Casein and without added MCT oil with DHA & ARA at levels not exceeding 10^8 colony forming units of LGG per gram (cfu/g), intended for the feeding of term infants from the time of birth under the supervision of a physician, is exempt from the pre-market approval requirements of the Federal Food, Drug, and Cosmetic Act, because MJ has determined that such use is generally recognized as safe (GRAS) through scientific procedures.

(b)(6)

Matias R Diez
Associate Director, Regulatory Science North America
Mead Johnson & Company

August 1, 2007
Date

A. Name and address of notifier

Mead Johnson & Company
2400 W. Lloyd Expressway
Evansville, Indiana 47721-0001.

Contact: Matias R Diez, Associate Director, Regulatory Science North America
Telephone: (812) 429-5714
Mobile:: (812) 499-9515
Facsimile: (812) 429-5054
E-mail: matias.diez@bms.com

B. Name and identification of GRAS substance

The name of the substance that is subject of this GRAS determination is *Lactobacillus casei*, subspecies *rhamnosus* GG, (LGG). This specific LGG product is manufactured by Valio by accepted fermentation techniques in facilities and under conditions that are suitable for human food use. Food grade hydrolyzed whey permeates and hydrolyzed whey/casein proteins are used as growth media ingredients in the fermentation process. After fermentation, LGG is concentrated by ultra filtration and thoroughly washed with sterile water to remove impurities (*e.g.*, fermented media components are removed in order to increase cell concentration), and saccharose is added as a cryoprotectant.

C. Intended conditions of use and consumer exposure

MJ has developed this dossier consisting of data and information establishing that the LGG powder containing *Lactobacillus casei*, subspecies *rhamnosus* GG, (LGG) is generally recognized as safe (GRAS) for use under the supervision of a physician in an exempt hypoallergenic infant formula powder with extensively hydrolyzed casein and without added MCT oil with DHA & ARA intended for term infants from the time of birth.

MJ proposes to add LGG powder at levels of 10^8 colony forming units of LGG per gram (cfu/g) of powdered formula. This level of LGG is intended to ensure a minimum concentration of 10^6 cfu/g throughout the 12-18 month shelf life of the formula. Based on this range of LGG concentrations, with normal dilution of the powder formula in water according to label directions (*i.e.*, 13.5 g/100 mL), and assuming an average daily formula intake of 800 mL, the estimated daily intake of LGG is approximately 10^8-10^{10} cfu per day over the shelf-life of the product.

MJ proposes to add LGG powder to an exempt hypoallergenic infant formula powder with extensively hydrolyzed casein and without added MCT oil with DHA & ARA used under the supervision of a physician and intended for term infants from the time of birth.

MJ proposes to add LGG powder to an exempt hypoallergenic infant formula powder with extensively hydrolyzed casein and without added MCT oil as a line extension with DHA & ARA in the United States. The product name has not been determined. This will be a powdered exempt infant formula for use under the

supervision of a physician in allergy management. This exempt hypoallergenic infant formula powder with extensively hydrolyzed casein and without added MCT oil with DHA & ARA is considered by the U.S. Food and Drug Administration (FDA) to be a food for special dietary use for infants. This formula containing LGG would also be marketed for the dietary management of food allergies and would not be intended to be fed to premature infants or infants who might have immune problems unless directed and supervised by the infant's physician.

MJ has added LGG to its Nutramigen (hypoallergenic infant formula powder with extensively hydrolyzed casein and without added MCT oil) line of infant formulas in the EU since 2003 at a level of 10^8 cfu/g powder. This level of LGG has been demonstrated to ensure a minimum concentration of 10^6 cfu/g throughout the 12-18 month shelf life of the formula. Through 2005, an estimated 51,900 infants have been fed Nutramigen LGG, representing over eight million days of consumption (based on annual production and/or sales of marketed formulas).

D. Basis for GRAS determination

MJN's GRAS determination for the proposed use of LGG is based on scientific procedures as described under 21 CFR 170.30(b).

To demonstrate that LGG is GRAS under its intended conditions of use, the safety of the intake of both LGG itself and the whole product is established under its intended conditions of use. This intake of the whole product and of LGG is determined to be GRAS by showing that the safety of these levels of intake is generally recognized by experts qualified by scientific training and experience to evaluate the safety of substances directly or indirectly added to food, and is based on generally available and accepted information.

The publicly available data demonstrating the safety of the proposed use of LGG was reviewed by a GRAS panel consisting of:

beneficial bacteria consumed by both infants and adults through consumption of yogurts, fermented products and dietary supplements is typically about 10^8-10^{10} colony forming units (cfu), a level that is more than 1000-fold lower than the number of bacteria resident in the entire intestinal tract (Zetterstrom et al., 1994). This suggests that, despite being present in sufficient quantities during the consumption period to impart beneficial activities in the gastrointestinal tract, these ingested bacteria are greatly outnumbered by indigenous strains in both infants and adults and would therefore not result in significant alterations (i.e., substantial or permanent changes) in the established intestinal biota.

B. Scientific rationale for the use of LGG

In addition to its primary role of digestion and absorption of nutrients, the gastrointestinal tract also functions to protect the host from potentially harmful agents such as intestinal microorganisms and food antigens. As previously mentioned, infants with CMA have been shown to have impaired gut barrier function, potentially leading to aberrant antigen transfer and immune responses and the breakdown of oral tolerance in infancy (Isolauri, 1995). Based on these observations, there is a strong scientific rationale for the use of infant formula containing beneficial bacteria that positively influence gut barrier function and immune responses by infants suffering from CMA. MJ has selected LGG to be used in such an exempt infant formula because it is among the most extensively studied and best documented bacterial strain available for commercial application. There is an abundance of scientific information pointing to both its safety and its usefulness in the dietary management of infants with atopic dermatitis and CMA. A number of clinical studies have evaluated the effects of LGG when fed with extensively hydrolyzed casein-protein formulas to infants with a history of CMA. In these studies, most infants and toddlers that were fed LGG for up to six months showed symptomatic improvement of cow milk protein allergy (atopic dermatitis) with no evidence of adverse effects on growth or on plasma and clinical markers.

pacemaker placement and pulmonary artery banding. Complications prior to LGG supplementation included seizures, acute renal insufficiency, prolonged respiratory support and suspected sepsis for which the patient received several 7-10 day courses of broad-spectrum antibiotics.

These four cases demonstrate that LGG, like other lactobacilli, has the potential in rare instances to be an opportunistic pathogen in severely compromised subjects. In all four cases, the patients' gut integrity was severely impaired, either due to short-gut syndrome or gut ischemia due to poor cardiac function. In addition, all four patients had central venous catheters and were fed LGG from opened capsules through their gastrostomy tubes, leading all of the authors to conclude that contamination of the central line was a possible point of possible point of entry of the bacteria. These cases describe special situations with complicating factors that are widely divergent from what is seen in infants with food allergies and therefore do not indicate a safety risk for the intended conditions of use which includes the dietary management of food allergies and does not include premature infants or infants who might have immune problems unless directed and supervised by the baby's doctor. The in vitro and animal evidence, the absence of adverse effects of LGG in extensive clinical studies involving healthy subjects and those with less severe medical conditions, the lack of increased infections despite a ~10-fold increase in LGG consumption over a nine year period and the experience with Nutramigen LGG in Europe all provide overwhelming evidence that LGG is generally recognized as safe for the intended conditions of use.

III. CONCLUSION

In summary, MJ and a qualified expert panel have determined that the use of LGG in an exempt hypoallergenic infant formula powder with extensively hydrolyzed casein and without added MCT with DHA & ARA intended for the feeding of term infants from the time of birth under the supervision of a physician is generally recognized as safe (GRAS) based on the published scientific literature and that this safety is confirmed by the genomic sequence of LGG and MJ's experience using LGG in Europe for the past four years.

TABLE OF CONTENTS

I. PROPOSED USE 1

A. Summary 1
B. Overview of Intestinal Biota 1
C. Selection of LGG as a Probiotic for Infant Formula 3
D. Proposed Use 5

II. IDENTITY AND DESCRIPTION OF LGG 6

A. Identity 6
B. Genetic Sequence and Profile 8
C. Antibiotic Resistance Profile 9

III. MANUFACTURING PROCESSES 12

A. LGG Powder Manufacturing Process 12
B. LGG Powder Specifications 14
C. Manufacturing Processes for Exempt Hypoallergenic Infant Formula powder with extensively hydrolyzed casein and without added MCT oil & DHA & ARA 15
D. Specifications for Exempt Hypoallergenic Infant Formula powder with extensively hydrolyzed casein and without added MCT oil & DHA & ARA 17

IV. ANALYTICAL METHODOLOGY FOR LGG 18

V. STABILITY OF LGG 19

VI. HISTORY OF LGG USE IN FOOD 20

VII. SAFETY OF LGG 22

A. *In Vitro* Studies 22
1. Ability to Adhere to Intestinal Cells 23
2. Ability to Degrade Mucin 27
3. Other Virulence Factors 28
4. Transfer of Antibiotic Resistance Genes 30
5. Impact on Intestinal Bacteria 31
B. Toxicity Studies 33
1. Acute Toxicity 33
2. Repeated Dosing Studies 34
C. Human Studies 41
1. Studies in Healthy Subjects 42

inflammatory bowel disorders. Collective assessment of these studies demonstrates that consumption of LGG is safe for use in infant formula and confers beneficial health effects for both healthy and compromised term infants from the time of birth.

In addition, during several years of consumption by infants of Mead Johnson's Nutramigen® LGG (hypoallergenic infant formula powder with extensively hydrolyzed casein and without added MCT oil) in the European Union (EU), no adverse effects have been reported to the manufacturer that could be ascribed to LGG. 1/ Mead Johnson began marketing a casein hydrolysate formula with LGG (*i.e.*, Nutramigen LGG) in the EU in 2003. As displayed in the following table, through 2005, an estimated 51,915 infants appeared to have been fed Nutramigen LGG, representing over eight million days of product consumption.

ESTIMATED CONSUMPTION OF NUTRAMIGEN LGG IN EUROPE

PRODUCT	Number of Infants [a]			
	2003	2004	2005	Total [b]
Nutramigen LGG (Stage 1)	–	4,657	5,463	10,120
Nutramigen LGG (Stage 2)	7,691	15,272	18,832	41,795

NOTES:

[a] Based on the total amount of product manufactured and shipped and assuming formula consumption as follows – Stage 1: 10 cans/month x 4 months; Stage 2: 6 cans/month x 6 months.

[b] Represents a total of more than 8.5 million days of feeding formula to infants.

1/ See additional explanation in section VI and accompanying footnote 3.

No adverse events have been confirmed in relation to Nutramigen LGG consumption. Relative to Nutramigen LGG sold in the EU, the extensively hydrolyzed casein and without added MCT oil with DHA & ARA formula that will be marketed in the U.S. differs only in that it will contain long-chain polyunsaturated fatty acids (LCPUFA). There is no evidence to indicate that LCPUFA affects either the solubility of the product or the viability of LGG in the product.

A. Proposed Use

Mead Johnson proposes to add LGG powder at levels of 10^8 colony forming units of LGG per gram (cfu/g) of powdered formula. This level of LGG is intended to ensure a minimum concentration if 10^6 cfu/g throughout the 12-18 month shelf life of the formula. Based on this range of LGG concentrations, with normal dilution of the powder formula in water according to label directions (*i.e.*, 13.5 g/100 mL), and assuming an average daily formula intake of 800 mL, the daily intake of LGG would be approximately 10^8-10^{10} cfu per day.

Mead Johnson proposes to add LGG powder to our extensively hydrolyzed casein and without added MCT oil with DHA & ARA as a line extension of this product in the United States. The product name has not been determined. This will be an extensively hypoallergenic Infant Formula powder with extensively hydrolyzed casein and without added MCT oil with DHA & ARA powdered, exempt infant formula for use in allergy management under the supervision of a physician. This extensively hypoallergenic infant formula powder with extensively hydrolyzed casein and without added MCT oil with DHA & ARA is considered by the U.S. Food and Drug Administration (FDA) to be a food for special dietary use for infants. The formula would be marketed for the dietary management of food allergies.

VALIO SPECIFICATIONS FOR LGG POWDER (GRADE P)	
Parameter	**Specification**
Aerobic bacterial spores (30°)	< 100 cfu/g
Bacillus cereus	< 100 cfu/g***
Saccharose	25-55% (40% typical)
Lactose	< 1%
ß-lactoglobulin	< 0.1 µg/g
Water activity	< 0.1
NOTES:	
*Absent within detection limit of < 3 Most Probable Number (MPN).	
**Absent within detection limit of < 10 cfu/g.	
***Not tested separately if aerobic bacterial spores absent (*i.e.*, < 10 cfu/g).	

The only allergen that is tested for during the manufacturing process is ß-lactoglobulin. While no information is available on other relevant food allergens, none are expected given the nature of the materials used to manufacture LGG powder and normal practices in place to ensure product quality.

C. Manufacturing Processes for an extensively hypoallergenic Infant Formula powder with extensively hydrolyzed casein and without added MCT oil with DHA & ARA

For manufacturing an extensively hypoallergenic Infant Formula powder with extensively hydrolyzed casein and without added MCT oil with DHA & ARA and LGG powder, base powder production, dry blending, and packaging are the same as used at Mead Johnson facilities to produce Infant formula powder with the current extensively hydrolyzed casein and without added MCT oil with DHA & ARA except for the use of LGG powder in base powder blending. This process is outlined below and involves a dry-blending operation, which consists of adding powdered infant formula base, dry LGG powder, and various vitamin and

mineral premixes to a ribbon blender for mixing, and which is followed by canning in composite cans with reduced oxygen (nitrogen flushed).

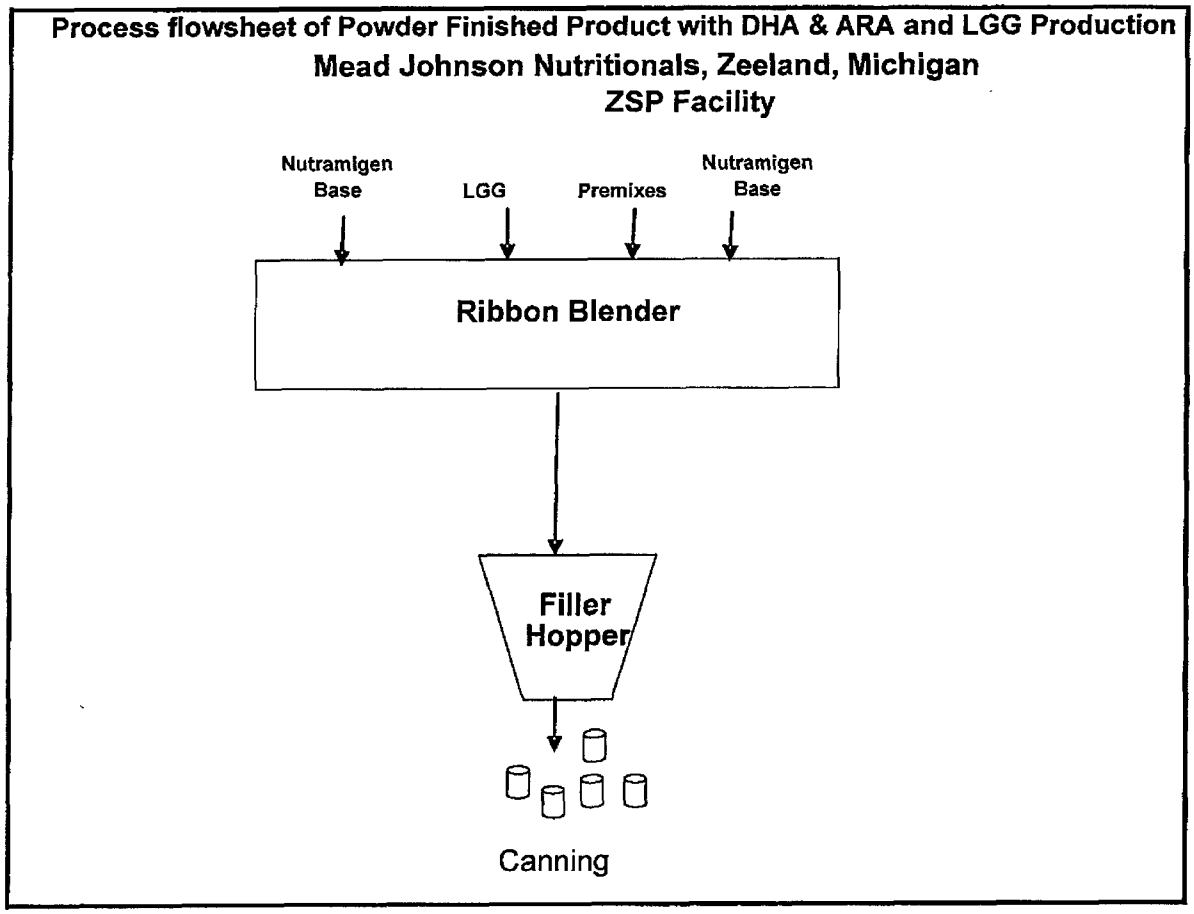

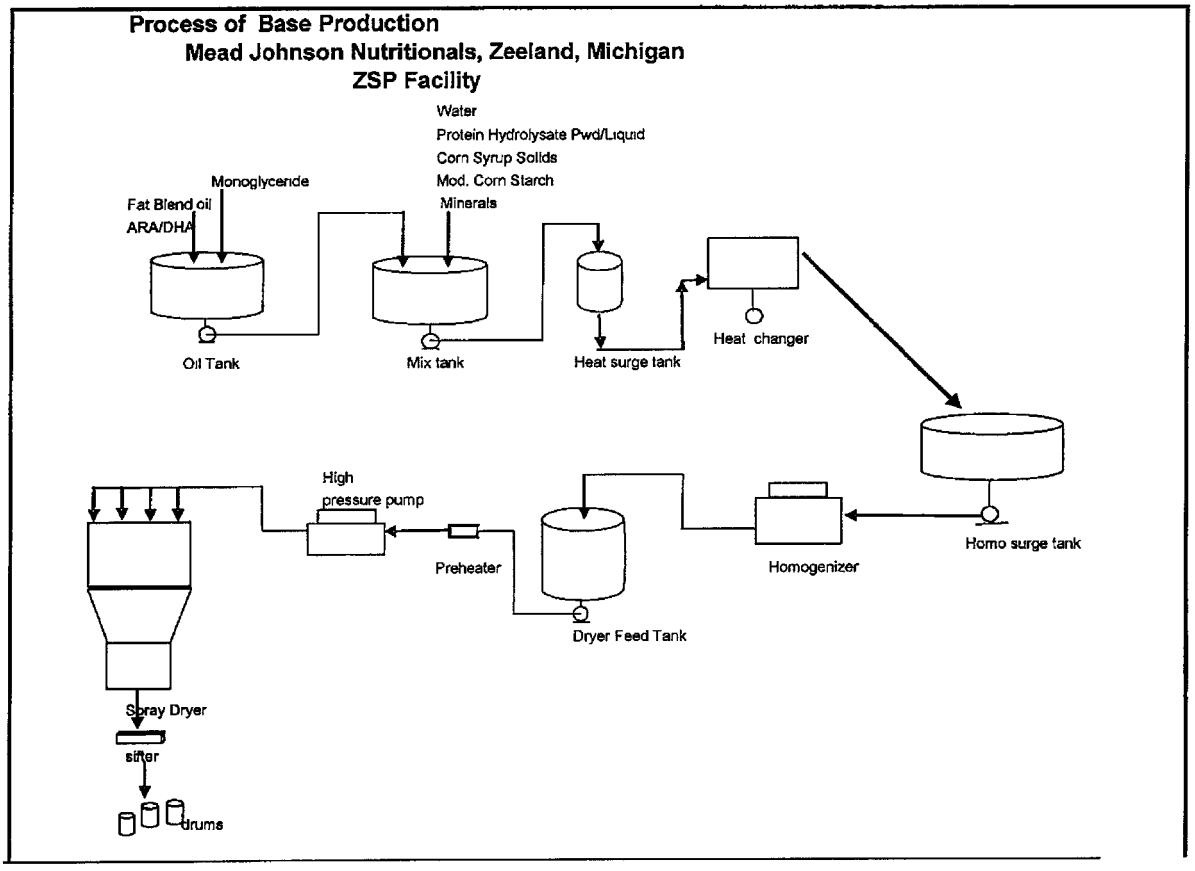

C. Specifications for Exempt Hypoallergenic Infant Formula Powder with Extensively hydrolyzed casein and without added MCT oil with DHA & ARA

The formulations for extensively hydrolyzed casein and without added MCT oil with DHA & ARA and LGG are identical to the formulations that are currently produced at Mead Johnson facilities with the following exceptions:

- 333.33 ppm of LGG powder is added to Exempt Hypoallergenic Infant Formula Powder with Extensively hydrolyzed casein and without added MCT oil with DHA & ARA (33.333 g/100kg powder).

- Carbohydrate content is reduced by 133 ppm of LGG powder is added to the extensively hydrolyzed casein and without added MCT oil with DHA & ARA (33.333 g/100 kg powder).Carbohydrate content is reduced by 133 ppm to account for carbohydrate content of LGG powder (on average 40% of LGG powder is sucrose).

- Because one-half of the sucrose content of LGG powder is fructose (66.66 ppm), it is appropriate to determine if there might be a potential risk to infants with hereditary fructose intolerance (HFI). Subjects with HFI have a reduced capacity to metabolize fructose and can present with symptoms of GI discomfort, hypoglycemia, nausea, vomiting, sweating or convulsions. Assuming a 90th percentile formula intake of 207 mL/kg bw per day, the daily intake of fructose from the extensively hydrolyzed casein and without added MCT oil with DHA & ARA is estimated at 1.9 mg/kg bw per day. This level of fructose is not be expected to provide a serious threat to individuals with HFI because studies have shown that fructose is tolerated by adults with HFI at 15-20 mg /kg bw per day (Briet *et al.*, 1995) and in a single infant with HFI at ~9.7 mg/kg bw per day (Barshop *et al.*, 2003).

II. ANALYTICAL METHODOLOGY FOR LGG

The principal means for identification of LGG is via traditional microbiological and biochemical methods, with PFGE used for strain confirmation and genetic stability assessment. The enumeration of lactobacilli from LGG powder is performed by Method G 8112 (attached as Appendix D), which is based on Fédération Internationale de Laiterie-International Dairy Federation (FIL-IDF) standard 117A:1988. This method is able to adequately differentiate and quantify viable LGG in the product.

Under standard recommended conditions of use, the ingestion of non-viable LGG from the extensively hydrolyzed casein and without added MCT oil with DHA & ARA is not anticipated to represent a safety concern. Other lactic acid bacteria, including various *Lactobacillus* spp., have been consumed for many years by both children and adults in a variety of product forms (*e.g.*, yogurts, fermented milks, dietary supplements, etc) without adverse effects.

III. HISTORY OF LGG USE IN FOOD

Lactobacilli have been consumed on a daily basis since humans started using fermented milks as food, including the probiotic use of certain *Lactobacillus* species for more than 75 years. (Salminen *et al.*, 1998). More specifically, since its discovery in 1985, LGG has been incorporated in a variety of food products consumed around the world, with the majority of these products sold in the EU and the U.S. LGG is added most commonly to dairy products, including yogurt, milk, and other dairy-based drinks. In addition, LGG is sold as a dietary supplement. A partial list of products containing LGG and the countries in which these products are sold is attached as Appendix F.

LGG is marketed as a starter culture in fermented foods and drinks in Denmark and the United Kingdom. In Japan, LGG is confirmed as a Food for Specified Health Uses (FOSHU) by the Japan Health and Nutrition Association. The Codex standards for infant formula (CODEX STAN 72-1981) and follow-up formula (CODEX STAN 156-1987, amended 1989) both list "L(+) lactic acid producing cultures" as approved food additives at levels subject only to good manufacturing practice (GMP).

The fecal concentrations and relative proportions of LGG differed by subject. LGG also was detected repeatedly in one of the control group infants. While the fecal concentrations of lactobacilli in the group administered LGG was consistently greater than that of the controls, the predominance pattern of the intestinal microbiota in the test group did not change over the course of the month (*i.e.*, > 50% of the total microbes were similar in both study groups). The authors concluded "The study shows that 2 wk administration of *Lactobacillus* GG, which starts right after birth, increases intestinal lactobacilli concentrations and does not impair the establishment of normal fecal microbiota." (Sepp *et al.*, 1993).

Petschow *et al.* (2003) compared the intestinal colonization and tolerance of different doses of LGG in healthy, full-term infants. Forty-nine infants, zero to three months of age, were fed, Nutramigen LGG a hydrolyzed, casein-based infant formula, supplemented with 0, 10^8, 10^9, or 10^{10} cfu of LGG per day for 14 days. The infants were fed unsupplemented formula for a seven day baseline period before LGG administration and for a 14 day follow-up period afterwards. Stool characteristics and tolerance symptoms were recorded daily, and levels of viable LGG were evaluated in stool samples obtained on days 3, 6, 9, and 12 of the test period and days 15, 21 and 28 of the follow-up period.

"Stool consistency, flatulence, and fussiness were similar among all groups." No other safety-related endpoints were discussed by the authors, and no specific adverse effects were reported. LGG was detected in significantly higher percentages of infants fed LGG than infants in the control group: 2 of 12 controls, 8

TABLE 1: SUMMARY OF CLINICAL STUDIES ON HEALTHY SUBJECTS							
Reference	**Objective**	**Design**	**Description of Subjects Treated with LGG; Age at Entry**	**Daily Dose and Delivery of LGG**	**Duration**	**Conclusion**	**Safety-Related Issues**
Term Infants							
Sepp *et al.* (1993)	Intestinal "colonization" of LGG and effect on gastrointestinal microbiota	Placebo controlled	15 LGG treated subjects (of 25 total newborns)	10^{10}-10^{11} cfu/g freeze-dried powder in ~5 mL of water	14 days	"The study shows that 2 wk administration of *Lactobacillus* GG, which starts right after birth, increases intestinal lactobacilli concentrations and does not impair the establishment of normal fecal microbiota."	No safety-related endpoints discussed; no specific adverse events reported
Petschow *et al.* (2003)	Intestinal "colonization" and tolerance of LGG	Placebo controlled	37 LGG treated subjects (of 49 total of ages 0-3 mos)	10^{8}-10^{10} cfu in hydrolyzed casein-based formula (Nutramigen®LGG)	14 days	"Feeding LGG at 10^{8} – 10^{10} cfu per day was well tolerated and led to transient colonization in healthy term infants. LGG colonization was apparently not related to level of LGG administered and tended to decrease 2 weeks after feeding supplemented formula."	No safety-related endpoints discussed; no specific adverse events reported. "Stool consistency, flatulence, and fussiness were similar among all groups."

\\\DC - 087097/000006 - 2386896 v4

000241

ANNEX 5.5.1 Manufacturer Cell bank system

Valio Ltd
R&D
T.Suomalainen
20.2.2002

Cell Bank System of LGG

Valio Ltd. is maintaining a cell bank system of its own. The system is divided into "long term storage", "intermediate term storage" and "short term storage" according to Kursop & Snell: Maintenance of Microorganisms, American Press, 1984.

MASTER CELL BANK

- **Long term storage at –40°C for ten years.**

LGG cells are freeze dried with a cryoprotectant in a vacuum system and packed in glass ampoules. Process is described in details in a document " Preparation of long term storage ampoules".
Every 10 year a culture is renewed and checked for microbiological purity and for carbohydrate metabolic pattern (API 50CHL, bioMerieux) and for genetic pattern (Pulsed Field Gel Electrophoresis; PFGE-profile). Results are registered into a QC-book. After checking new ampoules for long term storage are prepared.

Once in five years the culture (an ampoule) is regenerated twice in M.R.S. broth at 37°C for 17 – 18 hours. Identity is checked by carbohydrate metabolic pattern (API 50 CHL) and by genetic pattern (PFGE-profile). Cell are concentrated 10 to 15 fold with centrifugation at 5 000 rpm. For preparation of the intermediate storage ampoules the cells are suspended in 1-10 ml of sterile M.R.S. supplemented with 15% of glycerol( ). One ml of the suspension is transferred into sterile cryotubes (polypropene) and stored at –80°C.

- **Intermediate term storage at –80°C for five years**

LGG cell frozen in M.R.S (15% glycerol) packed in 10 to 20 cryo-tubes. Eah time a new cryo-tube is used and then discarded.

Once in two years the frozen concentrate is regenerated twice in M.R.S. broth at 37°C for 17 – 18 hours. Identity is checked by carbonhydrate metabolic pattern (API 50 CHL) and cell morphology using a microscopic method. Purity is checked by plating on sugar free agar (SF). For preparation of short term storage ampoules the cells are concentrated 10 to 15 fold with centrifugation at 5 000 rpm. 1-5 ml of sterile M.R.S. supplemented with 15% of glycerol is added on cell concentrate and mixed well. 0.1 ml of the suspension is transferred into sterile polypropene ampoules and stored at –80°C.

WORKING CELL BANK

- **Short term storage at –80°C for two years**

LGG cells frozen in MRS(15% glycerol) packed 10 to 15 cryotubes. Each time an inoculum for LGG(P) production is prepared one cryotube is used. Cells are identified microscopically by cell morphology and checked for microbiological purity by plating on Sugar Free agar (SF).

Summary

Every 5th year (Freeze dried ampoule at –40°C)
- API 50 CHL: carbohydrate pattern

- Pulsed Field Gel Electrophoresis (PFGE): genetic pattern
- Microbiological Purity (Sugar Free Agar, SF)
- Preparation of Intermediate Term Storage ampoules

Once in two years (every second year)
- API 50 CHL pattern
- Morphology by Microscopic method
- Microbiological Purity by plating on SF-agar
- Preparation of short term storage ampoules

QC analysis protocol

Analysis	The tests and limits (cfu/g, others indicated)				
	1st inoculum	2nd inoculum (IPC)	Production fermentation (IPC)	Concentrate (IPC)	Freeze dried powder (QC,IPC)
Microbiological					
Lactobacillus GG, accredited		IPC	IPC	IPC	$\geq 5 \times 10^{11}$
Non lactic acid bacteria	IPC	IPC	IPC	IPC	<1000
Coliforms at 30°C					0/10 g
*Enterobacteriaceae and other Gram neg.					0/10 g
Yeasts					<100
Moulds					<100
Salmonella, accredited					0/25 g
Staphylococcus aureus, accredited					<10
Pseudomonas aeruginosa					<10
Clostridial spores					<3
Aerobic bacterial spores 30°C					<100
***Bacillus cereus, accredited					<10
**Lactococci		IPC	IPC	IPC	IPC
Enterococci		IPC	IPC	IPC	
Chemical and physical					
Saccharose					25-55%
Lactose (IPC)					<0,5%
Moisture (IPC)					<10% (<5%)
Water activity (IPC)					<10% (<5%)
ß-lactoglobulin (IPC)					<0,1 (<0,5%)

Appendix E: Genetic Stability Testing of LGG by PFGE

PFGE-profiles of colonies isolated from infant formula samples and the *L. rhamnosus* GG lot used in the formula

Sample: Infant formulas Restriction enzyme *Asc* I

1. Nutramigen – 25C, 80 wks (B20908)
2. Pregestimil - 25C, 72 wks (B20908)
3. Partial hydrolysate - 25C, 63 wks (B20908)
4. *L. rhamnosus* GG (B20908)
5. *L. rhamnosus* GG
6. Low Range PFGE-marker
7. Nutramigen - 25C, 52 wks (B20306)
8. *L rhamnosus* GG B20306
9. Partial hydrolysate – 40C, 12 wks (B10225)
10. *L. rhamnosus* GG B10225
11. Nutramigen – 40C, 12 wks (B40919)
12. *L. rhamnosus* GG B40919
13. *L.. rhamnosus* GG
14. Low Range PFGE-marker
15. Lambda Ladder PFGE-marker

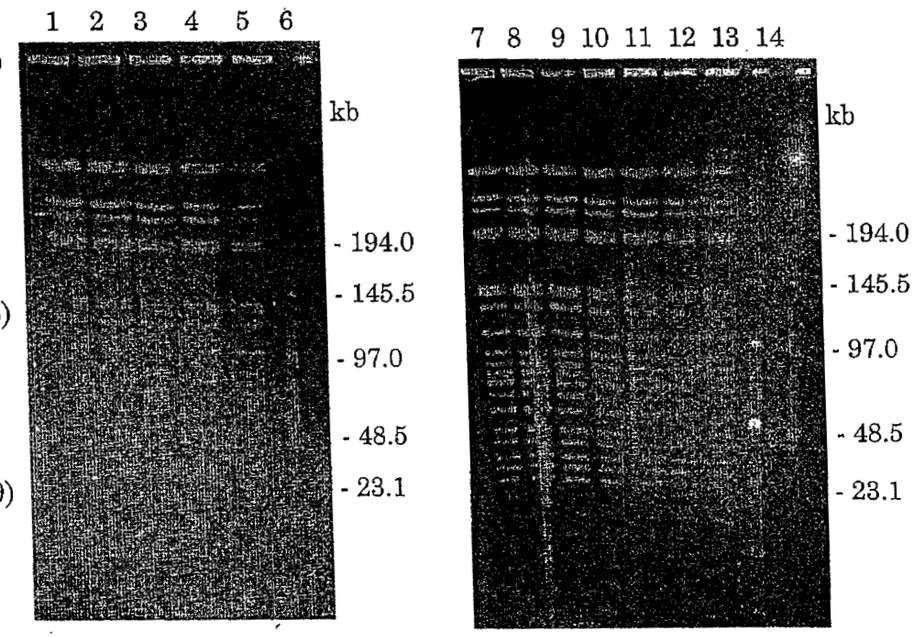

Valio Ltd, R&D
26.5.2005 /ST

BEST ORIGINAL COPY

000245

\\\DC - 087097/000006 - 2360895 v4

PFGE-profiles of colonies isolated from infant formula samples and the *L. rhamnosus* GG lot used in the formula

Sample: Infant formulas Restriction enzyme *Fse* I

1. Nutramigen – 25C, 80 wks (B20908)
2. Progestimil - 25C, 72 wks (B20908)
3. Partial hydrolysate - 25C, 63 wks (B20908)
4. B20908
5. *L. rhamnosus* GG
6. Low Range PFGE-marker
7. Part hydrolysate – 40C, 12 wks (B10225)
8. *L. rhamnosus* GG B10225
9. Nutramigen – 40C, 12 wks (B40919)
10. *L. rhamnosus* GG B40919
11. *L. rhamnosus* GG
12. Low Range PFGE-marker
13. Lambda Ladder PFGE-marker
14. Nutramigen – 25C, 52 wks (B20306)
15. *L. rhamnosus* GG B20306
16. *L. rhamnosus* GG
17. Low Range PFGE-marker
18. Lambda Ladder PFGE-marker

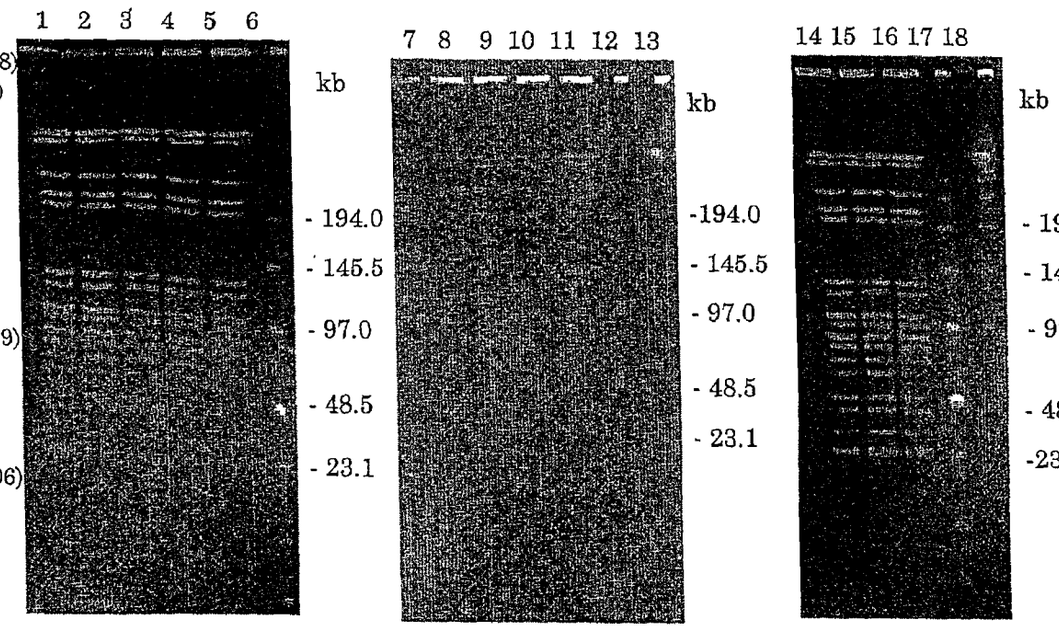

Valio Ltd, R&D
26.5.2005 /ST

BEST ORIGINAL COPY

000246

PFGE-profiles of colonies isolated from infant formula samples and the *L. rhamnosus* GG lot used in the formula

Sample: Infant formulas Restriction enzyme *Not* I

1. Nutramigen – 25C, 80 wks (B20908)
2. Pregestimil - 25C, 72 wks (B20908)
3. Partial hydrolysate - 25C, 63 wks (B20908)
4. *L. rhamnosus* GG B20908
5. *L. rhamnosus* GG
6. Low Range PFGE-marker
7. Lambda Ladder PFGE-marker
8. Nutramigen – 25C, 52 wks (B20306)
9. *L. rhamnosus* GG B20306
10. Partial hydrolysate – 40C, 12 wks (B10225)
11. *L. rhamnosus* GG B10225
12. Nutramigen – 40C, 12 wks (B40919)
13. *L. rhamnosus* GG B40919
14. *L. rhamnosus* GG
15. Low Range PFGE-marker

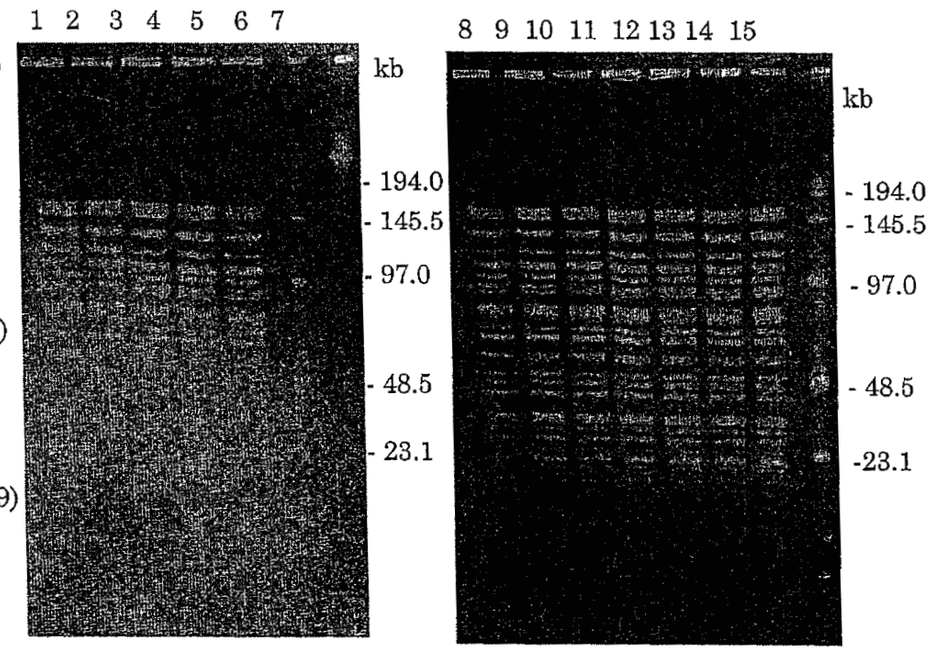

Valio Ltd,
R&D
26.5.2005 /ST

\\\DC - 087097/000006 - 2360895 v4

BEST ORIGINAL COPY

000247

SWEDEN	VALIO SVERIGE AB	GEFILAC	FERMENTED MILK, YOGURT, JUICE DRINKS	2000
Papua-New Guinea	Pauls Limited	Vaalia	Yogurt	2000
Taiwan	Hey Song Corporation	Hey Song Beautiful Day	Drinkable yogurt	2001
Spain	Iparlat S.A.	Kaiku Actif	Fermented milk drink	2001
Indonesia	Pauls Limited	Vaalia	Yogurt	2001
Ireland	Glanbia Plc.	Yoplait Everybody	Drinkable yogurt	2001
United Arab Emirates	Al Ain Dairy Farm	Laban with Gefilac	Fermented milk	2001
Germany, France, Belgium, Netherlands, Norway, Sweden, Denmark Italy Spain	Mead Johnson Company	Nutramigen LGG	Hydrolysate infant formula	2002
Other Products				
Italy	Dicofarm S.p.A.	Dicoflor Giflorex Floridal	Bacterial powder in sachets, ORS + LGG	1995
Finland	Valio Ltd	Gefilus	Hard gelatin capsules	1997
U.S.A.	ConAgra Foods, Inc.	Culturelle	Hard gelatin capsules	1998
Estonia	Valio Ltd	Gefilus	Hard gelatin capsules	1998
Germany	InfectoPharm GmbH	InfectoDiarrstop GG LGG	ORS + LGG, Hard gelatin capsules	2000
Lithuania	Valio Ltd	Gefilus	Hard gelatin capsules	2000
France	Nutergia/ Lallemand	Ergyphilus Plus	Hard gelatin capsules	2001

BLANK PAGE(S) INSERTED FOR CORRECT PAGINATION

AM

Ramos-Valle, Moraima

From: matias.diez@bms.com on behalf of Matias R Diez [matias.diez@bms.com]
Sent: Sunday, February 24, 2008 5:59 PM
To: Ramos-Valle, Moraima
Cc: Gaynor, Paulette M
Subject: Re: GRN 231 comments
Attachments: GRN # 31 comments.pdf; emfinfo.txt

Dear Moraima,

Thank you very much for your telephone call and e-mail regarding the comments for GRN #231.

We have incorporated the changes requested and have attached a PDF files with the pages that needs to be replaced in the file. The name change for the product has been made as requested and the correct infant formula classification has been incorporated.

An additional minor correction was made to page 20 and that was only to correct the number of the footnote appearing on that page.

Hard copies of the documents attached will be sent to you by Federal Express. You should be receiving them within the next few days.

If you have any questions, please feel free to contact me.

Thank you again and best regards,
Matias

Matias Diez
Associate Director, Regulatory Science North America
Global Research and Development
Mead Johnson & Company
Phone: 812-429-5714
Mobile: 812-499-9515
Fax: 812-429-5054

Ramos-Valle, Moraima wrote:

> Dear Dr. Diez,
>
> As per our telephone conversation yesterday February 20, 2008, I am sending you an email that summarizes my comments.
>
> First, in the amendment dated January 2, 2008, Mead Johnson suggested the name "exempt hypoallergenic infant formula powder with extensively hydrolyzed casein and without MCT oil with DHA & ARA" as a generic name for Nutramigen LIPIL. We would like to rephrase this and refer to the infant formula powder as "exempt hypoallergenic infant

Mead Johnson Nutritionals

2400 West Lloyd Expressway Evansville, IN 47721-0001 812-429-5000

February 25, 2008

Moraima J. Ramos Valle (HFS-025)
Consumer Safety Officer
Office of Additive Safety
Center for Food Safety and Applied Nutrition
Food and Drug Administration
5100 Paint Branch Parkway
College Park, MD 20740-3835

RE: GRN # 231 Comments

Dear Moraima,

Thank you for your e-mail dated February 21 regarding the comments for GRN #231.

We have incorporated the changes requested. Enclosed please find an original of each page that needs to be replaced in the GRN #231 file. The name change for the product has been made as requested and the correct infant formula classification has been incorporated.

An additional minor correction was made to page 20 and that was only to correct the number of the footnote appearing on that page.

If you have any questions, please feel free to contact me.

Sincerely,

(b)(6)

Matias Diez, PharmD
Associate Director, Regulatory Science North America

cc: Paulette Gaynor, Ph.D.

I. GRAS Exemption Claim

Pursuant to the criteria provided in proposed 21 CFR 170.36 (62 FR 18938; April 17, 1997; *Substances Generally Recognized as Safe (GRAS)*; the GRAS proposal), Mead Johnson & Company (MJ) hereby notifies the Food and Drug Administration that the use of *Lactobacillus* GG (LGG) in Exempt Hypoallergenic Infant Formula Powder with Extensively Hydrolyzed Casein and oils containing Docosahexaenoic Acid (DHA) and Arachidonic Acid (ARA) and without Medium-Chain Triglycerides (MCT) oil at levels not exceeding 10^8 colony forming units of LGG per gram (cfu/g), intended for the feeding of term infants from the time of birth under the supervision of a physician, is exempt from the pre-market approval requirements of the Federal Food, Drug, and Cosmetic Act, because MJ has determined that such use is generally recognized as safe (GRAS) through scientific procedures.

_____ _____

Matias R Diez
Associate Director, Regulatory Science North America
Mead Johnson & Company

Date

A. Name and address of notifier

Mead Johnson & Company
2400 W. Lloyd Expressway
Evansville, Indiana 47721-0001.

Contact: Matias R Diez, Associate Director, Regulatory Science North America
Telephone: (812) 429-5714
Mobile: (812) 499-9515
Facsimile: (812) 429-5054
E-mail: matias.diez@bms.com

B. Name and identification of GRAS substance

The name of the substance that is subject of this GRAS determination is *Lactobacillus casei*, subspecies *rhamnosus* GG, (LGG). This specific LGG product is manufactured by Valio by accepted fermentation techniques in facilities and under conditions that are suitable for human food use. Food grade hydrolyzed whey permeates and hydrolyzed whey/casein proteins are used as growth media ingredients in the fermentation process. After fermentation, LGG is concentrated by ultra filtration and thoroughly washed with sterile water to remove impurities (*e.g.*, fermented media components are removed in order to increase cell concentration), and saccharose is added as a cryoprotectant.

C. Intended conditions of use and consumer exposure

MJ has developed this dossier consisting of data and information establishing that the LGG powder containing *Lactobacillus casei*, subspecies *rhamnosus* GG, (LGG) is generally recognized as safe (GRAS) for use under the supervision of a physician in an Exempt Hypoallergenic Infant Formula Powder with Extensively Hydrolyzed Casein and oils containing DHA and ARA and without MCT oil intended for term infants from the time of birth.

MJ proposes to add LGG powder at levels of 10^8 colony forming units of LGG per gram (cfu/g) of powdered formula. This level of LGG is intended to ensure a minimum concentration of 10^6 cfu/g throughout the 12-18 month shelf life of the formula. Based on this range of LGG concentrations, with normal dilution of the powder formula in water according to label directions (*i.e.*, 13.5 g/100 mL), and assuming an average daily formula intake of 800 mL, the estimated daily intake of LGG is approximately 10^8-10^{10} cfu per day over the shelf-life of the product.

MJ proposes to add LGG powder to an Exempt Hypoallergenic Infant Formula Powder with Extensively Hydrolyzed Casein and oils containing DHA and ARA and without MCT oil used under the supervision of a physician and intended for term infants from the time of birth.

MJ proposes to add LGG powder to Exempt Hypoallergenic Infant Formula Powder with Extensively Hydrolyzed Casein and oils containing DHA and ARA and without MCT oil as a line extension in the United States. The product name had not been determined. This will be a powdered exempt infant formula for use under the

supervision of a physician in allergy management. This Exempt Hypoallergenic Infant Formula Powder with Extensively Hydrolyzed Casein and oils containing DHA and ARA and without MCT Oil is considered by the U.S. Food and Drug Administration (FDA) to be an exempt infant formula. The formula containing LGG will be marketed for the dietary management of food allergies and would not be intended to be fed to premature infants or infants who might have immune problems unless directed and supervised by the infant's physician.

MJ has added LGG to its Nutramigen (hypoallergenic infant formula powder with extensively hydrolyzed casein and without added MCT) line of infant formulas in the EU since 2003 at a level of 10^8 cfu/g powder. This level of LGG has been demonstrated to ensure a minimum concentration of 10^6 cfu/g throughout the 12-18 month shelf life of the formula. Through 2005, an estimated 51,900 infants have been fed Nutramigen LGG, representing over eight million days of consumption (based on annual production and/or sales of marketed formulas).

D. Basis for GRAS determination

MJN's GRAS determination for the proposed use of LGG is based on scientific procedures as described under 21 CFR 170.30(b).

To demonstrate that LGG is GRAS under its intended conditions of use, the safety of the intake of both LGG itself and the whole product is established under its intended conditions of use. This intake of the whole product and of LGG is determined to be GRAS by showing that the safety of these levels of intake is generally recognized by experts qualified by scientific training and experience to evaluate the safety of substances directly or indirectly added to food, and is based on generally available and accepted information.

The publicly available data demonstrating the safety of the proposed use of LGG was reviewed by a GRAS panel consisting of:

pacemaker placement and pulmonary artery banding. Complications prior to LGG supplementation included seizures, acute renal insufficiency, prolonged respiratory support and suspected sepsis for which the patient received several 7-10 day courses of broad-spectrum antibiotics.

These four cases demonstrate that LGG, like other lactobacilli, has the potential in rare instances to be an opportunistic pathogen in severely compromised subjects. In all four cases, the patients' gut integrity was severely impaired, either due to short-gut syndrome or gut ischemia due to poor cardiac function. In addition, all four patients had central venous catheters and were fed LGG from opened capsules through their gastrostomy tubes, leading all of the authors to conclude that contamination of the central line was a possible point of entry of the bacteria. These cases describe special situations with complicating factors that are widely divergent from what is seen in infants with food allergies and therefore do not indicate a safety risk for the intended conditions of use which includes the dietary management of food allergies and does not include premature infants or infants who might have immune problems unless directed and supervised by the baby's doctor. The in vitro and animal evidence, the absence of adverse effects of LGG in extensive clinical studies involving healthy subjects and those with less severe medical conditions, the lack of increased infections despite a ~10-fold increase in LGG consumption over a nine year period and the experience with Nutramigen LGG in Europe all provide overwhelming evidence that LGG is generally recognized as safe for the intended conditions of use.

III. Conclusion

In summary, MJ and a qualified expert panel have determined that the use of LGG in an Exempt Hypoallergenic Infant Formula Powder with Extensively Hydrolyzed Casein and oils containing DHA and ARA and without MCT oil intended for the feeding of term infants from the time of birth under the supervision of a physician is generally recognized as safe (GRAS) based on the published scientific literature and that this safety is confirmed by the genomic sequence of LGG and MJ's experience using LGG in Europe for the past four years.

TABLE OF CONTENTS

I. PROPOSED USE 1

A. Summary 1
B. Overview of Intestinal Biota 1
C. Selection of LGG as a Probiotic for Infant Formula 3
D. Proposed Use 5

II. IDENTITY AND DESCRIPTION OF LGG 6

A. Identity 6
B. Genetic Sequence and Profile 8
C. Antibiotic Resistance Profile 9

III. MANUFACTURING PROCESSES 12

A. LGG Powder Manufacturing Process 12
B. LGG Powder Specifications 14
C. Manufacturing Processes for Exempt Hypoallergenic Infant Formula Powder with Extensively Hydrolyzed Casein and oils containing Docosahexaenoic Acid (DHA) and Arachidonic Acid (ARA) and without Medium-Chain Triglycerides (MCT) oil 15
D. Specifications for Exempt Hypoallergenic Infant Formula Powder with Extensively Hydrolyzed Casein and oils containing Docosahexaenoic Acid (DHA) and Arachidonic Acid (ARA) and without Medium-Chain Triglycerides (MCT) oils 17

IV. ANALYTICAL METHODOLOGY FOR LGG 18

V. STABILITY OF LGG 19

VI. HISTORY OF LGG USE IN FOOD 20

VII. SAFETY OF LGG 22

A. *In Vitro* Studies 22
1. Ability to Adhere to Intestinal Cells 23
2. Ability to Degrade Mucin 27
3. Other Virulence Factors 28
4. Transfer of Antibiotic Resistance Genes 30
5. Impact on Intestinal Bacteria 31
B. Toxicity Studies 33
1. Acute Toxicity 33
2. Repeated Dosing Studies 34
C. Human Studies 41
1. Studies in Healthy Subjects 42

inflammatory bowel disorders. Collective assessment of these studies demonstrates that consumption of LGG is safe for use in infant formula and confers beneficial health effects for both healthy and compromised term infants from the time of birth.

In addition, during several years of consumption by infants of Mead Johnson's Nutramigen® LGG (hypoallergenic infant formula powder with extensively hydrolyzed casein and without added MCT oil) in the European Union (EU), no adverse effects have been reported to the manufacturer that could be ascribed to LGG. 2/ Mead Johnson began marketing a casein hydrolysate formula with LGG (*i.e.*, Nutramigen LGG) in the EU in 2003. As displayed in the following table, through 2005, an estimated 51,915 infants appeared to have been fed Nutramigen LGG, representing over eight million days of product consumption.

ESTIMATED CONSUMPTION OF NUTRAMIGEN LGG IN EUROPE				
PRODUCT	**Number of Infants [a]**			
	2003	**2004**	**2005**	**Total [b]**
Nutramigen LGG (Stage 1)	–	4,657	5,463	10,120
Nutramigen LGG (Stage 2)	7,691	15,272	18,832	41,795

NOTES:

[a] Based on the total amount of product manufactured and shipped and assuming formula consumption as follows – Stage 1: 10 cans/month x 4 months; Stage 2: 6 cans/month x 6 months.

[b] Represents a total of more than 8.5 million days of feeding formula to infants.

2/ See additional explanation in section VI and accompanying footnote 3.

No adverse events have been confirmed in relation to Nutramigen LGG consumption. Relative to Nutramigen LGG sold in the EU, this Hypoallergenic Infant Formula Powder with Extensively Hydrolyzed Casein and oils containing Docosahexaenoic Acid (DHA) and Arachidonic Acid (ARA) and without Medium-Chain Triglycerides (MCT) oil that will be marketed in the U.S. differs only in that it will contain long-chain polyunsaturated fatty acids (LCPUFA). There is no evidence to indicate that LCPUFA affects either the solubility of the product or the viability of LGG in the product.

A. Proposed Use

Mead Johnson proposes to add LGG powder at levels of 10^8 colony forming units of LGG per gram (cfu/g) of powdered formula. This level of LGG is intended to ensure a minimum concentration if 10^6 cfu/g throughout the 12-18 month shelf life of the formula. Based on this range of LGG concentrations, with normal dilution of the powder formula in water according to label directions (*i.e.*, 13.5 g/100 mL), and assuming an average daily formula intake of 800 mL, the daily intake of LGG would be approximately 10^8-10^{10} cfu per day.

Mead Johnson proposes to add LGG powder to a Hypoallergenic Infant Formula Powder with Extensively Hydrolyzed Casein and oils containing DHA and ARA and without MCT oil as a line extension in the United States. The product name has not been determined. This Hypoallergenic Infant Formula Powder with Extensively Hydrolyzed Casein and oils containing DHA and ARA and without MCT oil is considered by the U.S. Food and Drug Administration (FDA) to be an exempt infant formula. The formula will be marketed for the dietary management of food allergies under the supervision of a physician.

VALIO SPECIFICATIONS FOR LGG POWDER (GRADE P)	
Parameter	**Specification**
Aerobic bacterial spores (30°)	< 100 cfu/g
Bacillus cereus	< 100 cfu/g***
Saccharose	25-55% (40% typical)
Lactose	< 1%
ß-lactoglobulin	< 0.1 µg/g
Water activity	< 0.1
NOTES: *Absent within detection limit of < 3 Most Probable Number (MPN). **Absent within detection limit of < 10 cfu/g. ***Not tested separately if aerobic bacterial spores absent (*i.e.*, < 10 cfu/g).	

The only allergen that is tested for during the manufacturing process is ß-lactoglobulin. While no information is available on other relevant food allergens, none are expected given the nature of the materials used to manufacture LGG powder and normal practices in place to ensure product quality.

C. Manufacturing Processes for a Hypoallergenic Infant Formula Powder with Extensively Hydrolyzed Casein and oils containing DHA and ARA and without MCT oil

For manufacturing a Hypoallergenic Infant Formula Powder with Extensively Hydrolyzed Casein and oils containing DHA and ARA and without MCT oil and added LGG, base powder production, dry blending, and packaging are the same as used at Mead Johnson facilities to produce infant formula powder with the current Hypoallergenic Infant Formula Powder with Extensively Hydrolyzed Casein and oils containing DHA and ARA and without MCT oil except for the use of LGG powder in base powder blending. This process is outlined below and involves a dry-blending operation, which consists of adding powdered infant formula base, dry LGG powder, and various vitamin and

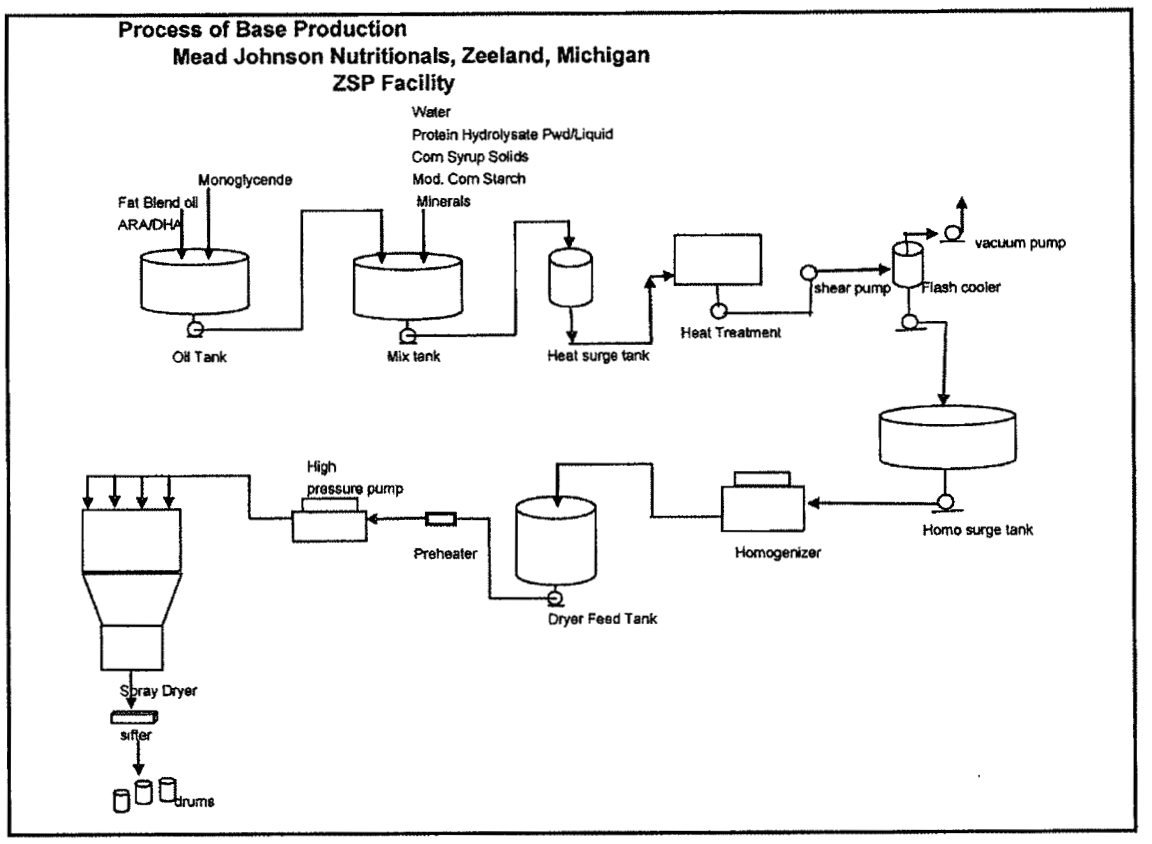

D. Specifications for Hypoallergenic Infant Formula Powder with Extensively Hydrolyzed Casein and oils containing DHA and ARA and without MCT oil

The formulations for the Hypoallergenic Infant Formula Powder with Extensively Hydrolyzed Casein and oils containing DHA and ARA and without MCT oil and added LGG are identical to the formulations that are currently produced at Mead Johnson facilities with the following exceptions:

- 333.33 ppm of LGG powder is added to Hypoallergenic Infant Formula Powder with Extensively Hydrolyzed Casein and DHA and ARA oils and without MCT oil (33.333 g/100 kg powder).

- Carbohydrate content is reduced by 133 ppm to account for carbohydrate content of LGG powder (on average 40% of LGG powder is sucrose).

Because one-half of the sucrose content of LGG powder is fructose (66.66 ppm), it is appropriate to determine if there might be a potential risk to infants with hereditary fructose intolerance (HFI). Subjects with HFI have a reduced capacity to metabolize fructose and can present with symptoms of GI discomfort, hypoglycemia, nausea, vomiting, sweating or convulsions. Assuming a 90th percentile formula intake of 207 mL/kg bw per day, the daily intake of fructose from a Hypoallergenic Infant Formula Powder with Extensively Hydrolyzed Casein and oils containing DHA and ARA and without MCT oil and LGG is estimated at 1.9 mg/kg bw per day. This level of fructose is not be expected to provide a serious threat to individuals with HFI because studies have shown that fructose is tolerated by adults with HFI at 15-20 mg /kg bw per day (Briet *et al.*, 1995) and in a single infant with HFI at ~9.7 mg/kg bw per day (Barshop *et al.*, 2003).

IV. ANALYTICAL METHODOLOGY FOR LGG

The principal means for identification of LGG is via traditional microbiological and biochemical methods, with PFGE used for strain confirmation and genetic stability assessment. The enumeration of lactobacilli from LGG powder is performed by Method G 8112 (attached as Appendix D), which is based on Fédération Internationale de Laiterie-International Dairy Federation (FIL-IDF) standard 117A:1988. This method is able to adequately differentiate and quantify viable LGG in the product.

Under standard recommended conditions of use, the ingestion of non-viable LGG from a Hypoallergenic Infant Formula Powder with Extensively Hydrolyzed Casein and oils containing DHA and ARA and without MCT oil is not anticipated to represent a safety concern. Other lactic acid bacteria, including various *Lactobacillus* spp., have been consumed for many years by both children and adults in a variety of product forms (*e.g.*, yogurts, fermented milks, dietary supplements, etc) without adverse effects.

V. HISTORY OF LGG USE IN FOOD

Lactobacilli have been consumed on a daily basis since humans started using fermented milks as food, including the probiotic use of certain *Lactobacillus* species for more than 75 years. (Salminen *et al.*, 1998). More specifically, since its discovery in 1985, LGG has been incorporated in a variety of food products consumed around the world, with the majority of these products sold in the EU and the U.S. LGG is added most commonly to dairy products, including yogurt, milk, and other dairy-based drinks. In addition, LGG is sold as a dietary supplement. A partial list of products containing LGG and the countries in which these products are sold is attached as Appendix F.

LGG is marketed as a starter culture in fermented foods and drinks in Denmark and the United Kingdom. In Japan, LGG is confirmed as a Food for Specified Health Uses (FOSHU) by the Japan Health and Nutrition Association. The Codex standards for infant formula (CODEX STAN 72-1981) and follow-up formula (CODEX STAN 156-1987, amended 1989) both list "L(+) lactic acid producing cultures" as approved food additives at levels subject only to good manufacturing practice (GMP).

Mead Johnson Nutritionals

2400 West Lloyd Expressway Evansville, IN 47721-0001 812-429-5000

RECEIVED
FEB 26 2008
BY: (b)(6)

February 25, 2008

Moraima J. Ramos Valle (HFS-025)
Consumer Safety Officer
Office of Additive Safety
Center for Food Safety and Applied Nutrition
Food and Drug Administration
5100 Paint Branch Parkway
College Park, MD 20740-3835

RE: GRN # 231 Comments

Dear Moraima,

Thank you for your e-mail dated February 21 regarding the comments for GRN #231.

We have incorporated the changes requested. Enclosed please find an original of each page that needs to be replaced in the GRN #231 file. The name change for the product has been made as requested and the correct infant formula classification has been incorporated.

An additional minor correction was made to page 20 and that was only to correct the number of the footnote appearing on that page.

If you have any questions, please feel free to contact me.

Sincerely,

(b)(6)

Matias Diez, PharmD
Associate Director, Regulatory Science North America

cc: Paulette Gaynor, Ph.D.

A Bristol-Myers Squibb Company

I. GRAS Exemption Claim

Pursuant to the criteria provided in proposed 21 CFR 170.36 (62 FR 18938; April 17, 1997; *Substances Generally Recognized as Safe (GRAS)*; the GRAS proposal), Mead Johnson & Company (MJ) hereby notifies the Food and Drug Administration that the use of *Lactobacillus* GG (LGG) in Exempt Hypoallergenic Infant Formula Powder with Extensively Hydrolyzed Casein and oils containing Docosahexaenoic Acid (DHA) and Arachidonic Acid (ARA) and without Medium-Chain Triglycerides (MCT) oil at levels not exceeding 10^8 colony forming units of LGG per gram (cfu/g), intended for the feeding of term infants from the time of birth under the supervision of a physician, is exempt from the pre-market approval requirements of the Federal Food, Drug, and Cosmetic Act, because MJ has determined that such use is generally recognized as safe (GRAS) through scientific procedures.

_____ _____

Matias R Diez Date
Associate Director, Regulatory Science North America
Mead Johnson & Company

A. Name and address of notifier

Mead Johnson & Company
2400 W. Lloyd Expressway
Evansville, Indiana 47721-0001.

Contact: Matias R Diez, Associate Director, Regulatory Science North America
Telephone: (812) 429-5714
Mobile: (812) 499-9515
Facsimile: (812) 429-5054
E-mail: matias.diez@bms.com

B. Name and identification of GRAS substance

The name of the substance that is subject of this GRAS determination is *Lactobacillus casei*, subspecies *rhamnosus* GG, (LGG). This specific LGG product is manufactured by Valio by accepted fermentation techniques in facilities and under conditions that are suitable for human food use. Food grade hydrolyzed whey permeates and hydrolyzed whey/casein proteins are used as growth media ingredients in the fermentation process. After fermentation, LGG is concentrated by ultra filtration and thoroughly washed with sterile water to remove impurities (*e.g.*, fermented media components are removed in order to increase cell concentration), and saccharose is added as a cryoprotectant.

C. Intended conditions of use and consumer exposure

MJ has developed this dossier consisting of data and information establishing that the LGG powder containing *Lactobacillus casei*, subspecies *rhamnosus* GG, (LGG) is generally recognized as safe (GRAS) for use under the supervision of a physician in an Exempt Hypoallergenic Infant Formula Powder with Extensively Hydrolyzed Casein and oils containing DHA and ARA and without MCT oil intended for term infants from the time of birth.

MJ proposes to add LGG powder at levels of 10^8 colony forming units of LGG per gram (cfu/g) of powdered formula. This level of LGG is intended to ensure a minimum concentration of 10^6 cfu/g throughout the 12-18 month shelf life of the formula. Based on this range of LGG concentrations, with normal dilution of the powder formula in water according to label directions (*i.e.*, 13.5 g/100 mL), and assuming an average daily formula intake of 800 mL, the estimated daily intake of LGG is approximately 10^8-10^{10} cfu per day over the shelf-life of the product.

MJ proposes to add LGG powder to an Exempt Hypoallergenic Infant Formula Powder with Extensively Hydrolyzed Casein and oils containing DHA and ARA and without MCT oil used under the supervision of a physician and intended for term infants from the time of birth.

MJ proposes to add LGG powder to Exempt Hypoallergenic Infant Formula Powder with Extensively Hydrolyzed Casein and oils containing DHA and ARA and without MCT oil as a line extension in the United States. The product name had not been determined. This will be a powdered exempt infant formula for use under the

supervision of a physician in allergy management. This Exempt Hypoallergenic Infant Formula Powder with Extensively Hydrolyzed Casein and oils containing DHA and ARA and without MCT Oil is considered by the U.S. Food and Drug Administration (FDA) to be an exempt infant formula. The formula containing LGG will be marketed for the dietary management of food allergies and would not be intended to be fed to premature infants or infants who might have immune problems unless directed and supervised by the infant's physician.

MJ has added LGG to its Nutramigen (hypoallergenic infant formula powder with extensively hydrolyzed casein and without added MCT) line of infant formulas in the EU since 2003 at a level of 10^8 cfu/g powder. This level of LGG has been demonstrated to ensure a minimum concentration of 10^6 cfu/g throughout the 12-18 month shelf life of the formula. Through 2005, an estimated 51,900 infants have been fed Nutramigen LGG, representing over eight million days of consumption (based on annual production and/or sales of marketed formulas).

D. Basis for GRAS determination

MJN's GRAS determination for the proposed use of LGG is based on scientific procedures as described under 21 CFR 170.30(b).

To demonstrate that LGG is GRAS under its intended conditions of use, the safety of the intake of both LGG itself and the whole product is established under its intended conditions of use. This intake of the whole product and of LGG is determined to be GRAS by showing that the safety of these levels of intake is generally recognized by experts qualified by scientific training and experience to evaluate the safety of substances directly or indirectly added to food, and is based on generally available and accepted information.

The publicly available data demonstrating the safety of the proposed use of LGG was reviewed by a GRAS panel consisting of:

pacemaker placement and pulmonary artery banding. Complications prior to LGG supplementation included seizures, acute renal insufficiency, prolonged respiratory support and suspected sepsis for which the patient received several 7-10 day courses of broad-spectrum antibiotics.

These four cases demonstrate that LGG, like other lactobacilli, has the potential in rare instances to be an opportunistic pathogen in severely compromised subjects. In all four cases, the patients' gut integrity was severely impaired, either due to short-gut syndrome or gut ischemia due to poor cardiac function. In addition, all four patients had central venous catheters and were fed LGG from opened capsules through their gastrostomy tubes, leading all of the authors to conclude that contamination of the central line was a possible point of entry of the bacteria. These cases describe special situations with complicating factors that are widely divergent from what is seen in infants with food allergies and therefore do not indicate a safety risk for the intended conditions of use which includes the dietary management of food allergies and does not include premature infants or infants who might have immune problems unless directed and supervised by the baby's doctor. The in vitro and animal evidence, the absence of adverse effects of LGG in extensive clinical studies involving healthy subjects and those with less severe medical conditions, the lack of increased infections despite a ~10-fold increase in LGG consumption over a nine year period and the experience with Nutramigen LGG in Europe all provide overwhelming evidence that LGG is generally recognized as safe for the intended conditions of use.

III. Conclusion

In summary, MJ and a qualified expert panel have determined that the use of LGG in an Exempt Hypoallergenic Infant Formula Powder with Extensively Hydrolyzed Casein and oils containing DHA and ARA and without MCT oil intended for the feeding of term infants from the time of birth under the supervision of a physician is generally recognized as safe (GRAS) based on the published scientific literature and that this safety is confirmed by the genomic sequence of LGG and MJ's experience using LGG in Europe for the past four years.

TABLE OF CONTENTS

I. PROPOSED USE 1

A. Summary 1
B. Overview of Intestinal Biota 1
C. Selection of LGG as a Probiotic for Infant Formula 3
D. Proposed Use 5

II. IDENTITY AND DESCRIPTION OF LGG 6

A. Identity 6
B. Genetic Sequence and Profile 8
C. Antibiotic Resistance Profile 9

III. MANUFACTURING PROCESSES 12

A. LGG Powder Manufacturing Process 12
B. LGG Powder Specifications 14
C. Manufacturing Processes for Exempt Hypoallergenic Infant Formula Powder with Extensively Hydrolyzed Casein and oils containing Docosahexaenoic Acid (DHA) and Arachidonic Acid (ARA) and without Medium-Chain Triglycerides (MCT) oil 15
D. Specifications for Exempt Hypoallergenic Infant Formula Powder with Extensively Hydrolyzed Casein and oils containing Docosahexaenoic Acid (DHA) and Arachidonic Acid (ARA) and without Medium-Chain Triglycerides (MCT) oils 17

IV. ANALYTICAL METHODOLOGY FOR LGG 18

V. STABILITY OF LGG 19

VI. HISTORY OF LGG USE IN FOOD 20

VII. SAFETY OF LGG 22

A. *In Vitro* Studies 22
1. Ability to Adhere to Intestinal Cells 23
2. Ability to Degrade Mucin 27
3. Other Virulence Factors 28
4. Transfer of Antibiotic Resistance Genes 30
5. Impact on Intestinal Bacteria 31
B. Toxicity Studies 33
1. Acute Toxicity 33
2. Repeated Dosing Studies 34
C. Human Studies 41
1. Studies in Healthy Subjects 42

inflammatory bowel disorders. Collective assessment of these studies demonstrates that consumption of LGG is safe for use in infant formula and confers beneficial health effects for both healthy and compromised term infants from the time of birth.

In addition, during several years of consumption by infants of Mead Johnson's Nutramigen® LGG (hypoallergenic infant formula powder with extensively hydrolyzed casein and without added MCT oil) in the European Union (EU), no adverse effects have been reported to the manufacturer that could be ascribed to LGG. 2/ Mead Johnson began marketing a casein hydrolysate formula with LGG (*i.e.*, Nutramigen LGG) in the EU in 2003. As displayed in the following table, through 2005, an estimated 51,915 infants appeared to have been fed Nutramigen LGG, representing over eight million days of product consumption.

ESTIMATED CONSUMPTION OF NUTRAMIGEN LGG IN EUROPE

PRODUCT	Number of Infants [a]			
	2003	2004	2005	Total [b]
Nutramigen LGG (Stage 1)	–	4,657	5,463	10,120
Nutramigen LGG (Stage 2)	7,691	15,272	18,832	41,795

NOTES:

[a] Based on the total amount of product manufactured and shipped and assuming formula consumption as follows – Stage 1: 10 cans/month x 4 months; Stage 2: 6 cans/month x 6 months.

[b] Represents a total of more than 8.5 million days of feeding formula to infants.

2/ See additional explanation in section VI and accompanying footnote 3.

No adverse events have been confirmed in relation to Nutramigen LGG consumption. Relative to Nutramigen LGG sold in the EU, this Hypoallergenic Infant Formula Powder with Extensively Hydrolyzed Casein and oils containing Docosahexaenoic Acid (DHA) and Arachidonic Acid (ARA) and without Medium-Chain Triglycerides (MCT) oil that will be marketed in the U.S. differs only in that it will contain long-chain polyunsaturated fatty acids (LCPUFA). There is no evidence to indicate that LCPUFA affects either the solubility of the product or the viability of LGG in the product.

A. Proposed Use

Mead Johnson proposes to add LGG powder at levels of 10^8 colony forming units of LGG per gram (cfu/g) of powdered formula. This level of LGG is intended to ensure a minimum concentration if 10^6 cfu/g throughout the 12-18 month shelf life of the formula. Based on this range of LGG concentrations, with normal dilution of the powder formula in water according to label directions (*i.e.*, 13.5 g/100 mL), and assuming an average daily formula intake of 800 mL, the daily intake of LGG would be approximately 10^8-10^{10} cfu per day.

Mead Johnson proposes to add LGG powder to a Hypoallergenic Infant Formula Powder with Extensively Hydrolyzed Casein and oils containing DHA and ARA and without MCT oil as a line extension in the United States. The product name has not been determined. This Hypoallergenic Infant Formula Powder with Extensively Hydrolyzed Casein and oils containing DHA and ARA and without MCT oil is considered by the U.S. Food and Drug Administration (FDA) to be an exempt infant formula. The formula will be marketed for the dietary management of food allergies under the supervision of a physician.

VALIO SPECIFICATIONS FOR LGG POWDER (GRADE P)	
Parameter	**Specification**
Aerobic bacterial spores (30°)	< 100 cfu/g
Bacillus cereus	< 100 cfu/g***
Saccharose	25-55% (40% typical)
Lactose	< 1%
ß-lactoglobulin	< 0.1 µg/g
Water activity	< 0.1
NOTES: *Absent within detection limit of < 3 Most Probable Number (MPN). **Absent within detection limit of < 10 cfu/g. ***Not tested separately if aerobic bacterial spores absent (*i.e.*, < 10 cfu/g).	

The only allergen that is tested for during the manufacturing process is ß-lactoglobulin. While no information is available on other relevant food allergens, none are expected given the nature of the materials used to manufacture LGG powder and normal practices in place to ensure product quality.

C. Manufacturing Processes for a Hypoallergenic Infant Formula Powder with Extensively Hydrolyzed Casein and oils containing DHA and ARA and without MCT oil

For manufacturing a Hypoallergenic Infant Formula Powder with Extensively Hydrolyzed Casein and oils containing DHA and ARA and without MCT oil and added LGG, base powder production, dry blending, and packaging are the same as used at Mead Johnson facilities to produce infant formula powder with the current Hypoallergenic Infant Formula Powder with Extensively Hydrolyzed Casein and oils containing DHA and ARA and without MCT oil except for the use of LGG powder in base powder blending. This process is outlined below and involves a dry-blending operation, which consists of adding powdered infant formula base, dry LGG powder, and various vitamin and

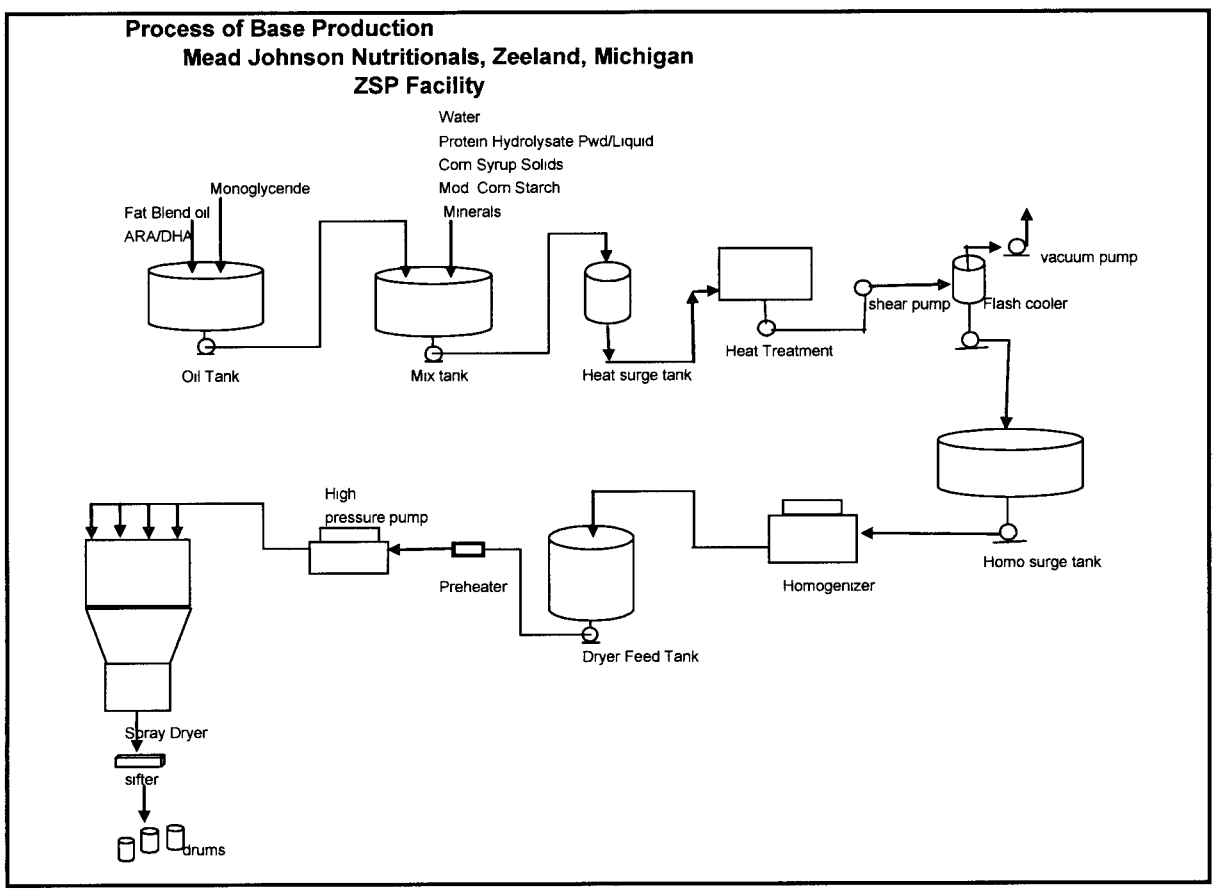

D. Specifications for Hypoallergenic Infant Formula Powder with Extensively Hydrolyzed Casein and oils containing DHA and ARA and without MCT oil

The formulations for the Hypoallergenic Infant Formula Powder with Extensively Hydrolyzed Casein and oils containing DHA and ARA and without MCT oil and added LGG are identical to the formulations that are currently produced at Mead Johnson facilities with the following exceptions:

- 333.33 ppm of LGG powder is added to Hypoallergenic Infant Formula Powder with Extensively Hydrolyzed Casein and DHA and ARA oils and without MCT oil (33.333 g/100 kg powder).

- Carbohydrate content is reduced by 133 ppm to account for carbohydrate content of LGG powder (on average 40% of LGG powder is sucrose).

Because one-half of the sucrose content of LGG powder is fructose (66.66 ppm), it is appropriate to determine if there might be a potential risk to infants with hereditary fructose intolerance (HFI). Subjects with HFI have a reduced capacity to metabolize fructose and can present with symptoms of GI discomfort, hypoglycemia, nausea, vomiting, sweating or convulsions. Assuming a 90th percentile formula intake of 207 mL/kg bw per day, the daily intake of fructose from a Hypoallergenic Infant Formula Powder with Extensively Hydrolyzed Casein and oils containing DHA and ARA and without MCT oil and LGG is estimated at 1.9 mg/kg bw per day. This level of fructose is not be expected to provide a serious threat to individuals with HFI because studies have shown that fructose is tolerated by adults with HFI at 15-20 mg /kg bw per day (Briet *et al.*, 1995) and in a single infant with HFI at ~9.7 mg/kg bw per day (Barshop *et al.*, 2003).

IV. ANALYTICAL METHODOLOGY FOR LGG

The principal means for identification of LGG is via traditional microbiological and biochemical methods, with PFGE used for strain confirmation and genetic stability assessment. The enumeration of lactobacilli from LGG powder is performed by Method G 8112 (attached as Appendix D), which is based on Fédération Internationale de Laiterie-International Dairy Federation (FIL-IDF) standard 117A:1988. This method is able to adequately differentiate and quantify viable LGG in the product.

Under standard recommended conditions of use, the ingestion of non-viable LGG from a Hypoallergenic Infant Formula Powder with Extensively Hydrolyzed Casein and oils containing DHA and ARA and without MCT oil is not anticipated to represent a safety concern. Other lactic acid bacteria, including various *Lactobacillus* spp., have been consumed for many years by both children and adults in a variety of product forms (*e.g.*, yogurts, fermented milks, dietary supplements, etc) without adverse effects.

V. HISTORY OF LGG USE IN FOOD

Lactobacilli have been consumed on a daily basis since humans started using fermented milks as food, including the probiotic use of certain *Lactobacillus* species for more than 75 years. (Salminen *et al.*, 1998). More specifically, since its discovery in 1985, LGG has been incorporated in a variety of food products consumed around the world, with the majority of these products sold in the EU and the U.S. LGG is added most commonly to dairy products, including yogurt, milk, and other dairy-based drinks. In addition, LGG is sold as a dietary supplement. A partial list of products containing LGG and the countries in which these products are sold is attached as Appendix F.

LGG is marketed as a starter culture in fermented foods and drinks in Denmark and the United Kingdom. In Japan, LGG is confirmed as a Food for Specified Health Uses (FOSHU) by the Japan Health and Nutrition Association. The Codex standards for infant formula (CODEX STAN 72-1981) and follow-up formula (CODEX STAN 156-1987, amended 1989) both list "L(+) lactic acid producing cultures" as approved food additives at levels subject only to good manufacturing practice (GMP).

AM

Ramos-Valle, Moraima

From: matias.diez@bms.com on behalf of Matias R Diez [matias.diez@bms.com]
Sent: Tuesday, March 11, 2008 12:15 PM
To: Ramos-Valle, Moraima
Cc: Gaynor, Paulette M
Subject: Re: GRN 231 comments
Attachments: emfinfo.txt

Dear Moraima,
Thank you very much for your e-mail.
MJ is in agreement with the change. Should you have any questions, please do not hesitate to contact me.
Thank you and best regards,
Matias

Ramos-Valle, Moraima wrote:

Dear Dr. Diez,

I am sending you this email to follow up with our telephone conversation on March 11, 2008 and related to the email below. Our staff decided to include the word "term" to the description previously mentioned. Now the generic name for your product will read: exempt hypoallergenic term infant formula powder with extensively hydrolyzed casein and oils containing docosahexaenoid acid and arachidonic acid and without medium-chain triglyceride oil.

As I mentioned in our conversation there is no need to send any amendments, it will be just fine to respond to this email. Please let me know if you have any questions.

Thanks and have a great day,
Moraima

(b)(6)
Consumer Safety Officer
U.S. Food and Drug Administration
Office of Food Additive Safety
Division of Biotech and GRAS Notice Review
Phone: 301-436-1248
E-mail: Moraima.Ramos-Valle@fda.hhs.gov

From: Ramos-Valle, Moraima
Sent: Thursday, February 21, 2008 11:42 AM
To: 'matias.diez@bms.com'
Cc: Gaynor, Paulette M; Ramos-Valle, Moraima

Subject: GRN 231 comments

Dear Dr. Diez,

As per our telephone conversation yesterday February 20, 2008, I am sending you an email that summarizes my comments.

First, in the amendment dated January 2, 2008, Mead Johnson suggested the name "exempt hypoallergenic infant formula powder with extensively hydrolyzed casein and without MCT oil with DHA & ARA" as a generic name for Nutramigen LIPIL. We would like to rephrase this and refer to the infant formula powder as "exempt hypoallergenic infant formula powder with extensively hydrolyzed casein and oils containing docosahexaenoid acid and arachidonic acid and without medium-chain triglyceride oil."

Second the finding of an erroneous sentence in pages 5 and 21 of GRN 231 that states "Nutramigen LIPIL is considered by the U.S. Food and Drug administration (FDA) to be a food for special dietary use for infants." It is correct that FDA considers Nutramigen LIPIL to be an exempt infant formula and it is regulates it as such. I suggested two ways of addressing this issue by either deleting the sentence from those pages or by rephrasing it to reflect the correct infant formula classification.

The changes could be sent electronically to me.

As always, please feel free to contact me if you have any questions.

Sincerely,
Moraima

(b)(6)

Consumer Safety Officer
U.S. Food and Drug Administration
Office of Food Additive Safety
Division of Biotech and GRAS Notice Review
Phone: 301-436-1248
E-mail: Moraima.Ramos-Valle@fda.hhs.gov

AM

Ramos-Valle, Moraima

From: matias.diez@bms.com on behalf of Matias R Diez [matias.diez@bms.com]
Sent: Tuesday, March 18, 2008 11:12 AM
To: Ramos-Valle, Moraima
Cc: Gaynor, Paulette M
Subject: GRN 231 clarification

Attachments: GRAS GRN 231 clarification.pdf; emfinfo.txt

GRAS GRN 231 clarification.pdf... emfinfo.txt (432 B)

Dear Ms Valle,
Thank you very much for your phone call.
As a follow-up to yesterday's conversation, please find attached the page containing the GRAS Exemption Claim to be replace in the GRAS notice GRN 231.
If you could review it and let me know if it is approapriate and addresses your questions, please let me know and I will send you the hard copy.
As always, thank you very much for your help and guidance in the process. If chances need to be made or any questions, please do not hesitate to contact me.
Best regards,
Matias

Mead Johnson Nutritionals

2400 West Lloyd Expressway Evansville, IN 47721-0001 812-429-5000

March 18, 2008

Moraima J. Ramos Valle (HFS-025)
Consumer Safety Officer
Office of Additive Safety
Center for Food Safety and Applied Nutrition
Food and Drug Administration
5100 Paint Branch Parkway
College Park, MD 20740-3835

RE: Clarification regarding GRAS notice GRN 231

Dear Ms Valle,

Thank you for your phone call and the opportunity to provide clarifications regarding MJ's GRAS notice GRN 231.

We have incorporated the clarifications that you requested in the GRAS Exemption Claim. Please find enclosed the page with the revised GRAS Exemption Claim to be replaced in notice GRN 231.

If you have any questions, please feel free to contact me.

Sincerely,

(b)(6)

Matias Diez, PharmD
Associate Director, Regulatory Science North America

cc: Paulette Gaynor, Ph.D.

I. GRAS Exemption Claim

Pursuant to the criteria provided in proposed 21 CFR 170.36 (62 FR 18938; April 17, 1997; *Substances Generally Recognized as Safe (GRAS)*; the GRAS proposal), Mead Johnson & Company (MJ) hereby notifies the Food and Drug Administration that the use of *Lactobacillus* GG (LGG) in Exempt Hypoallergenic Infant Formula Powder with Extensively Hydrolyzed Casein and oils containing Docosahexaenoic Acid (DHA) and Arachidonic Acid (ARA) and without Medium-Chain Triglycerides (MCT) oil at levels not exceeding 10^8 colony forming units of LGG per gram (cfu/g), intended for the feeding of term infants from the time of birth under the supervision of a physician, is exempt from the pre-market approval requirements of the Federal Food, Drug, and Cosmetic Act, because MJ has determined that such use is generally recognized as safe (GRAS) through scientific procedures. MJ's GRAS determination does not encompass LGG's use by premature infants or infants who might have immune problems, unless directed and supervised by the infant's physician.

(b)(6)

Matias R Diez
Associate Director, Regulatory Science North America
Mead Johnson & Company

03/18/2008
Date

A. Name and address of notifier

Mead Johnson & Company
2400 W. Lloyd Expressway
Evansville, Indiana 47721-0001.

Contact:	Matias R Diez, Associate Director, Regulatory Science North America
Telephone:	(812) 429-5714
Mobile:	(812) 499-9515
Facsimile:	(812) 429-5054
E-mail:	matias.diez@bms.com

BLANK PAGE(S) INSERTED FOR CORRECT PAGINATION

AM

Mead Johnson Nutritionals

2400 West Lloyd Expressway Evansville, IN 47721-0001 812-429-5000

RECEIVED
MAY 05 2008
BY: ...

May 2, 2008

Moraima J. Ramos Valle (HFS-025)
Consumer Safety Officer
Office of Additive Safety
Center for Food Safety and Applied Nutrition
Food and Drug Administration
5100 Paint Branch Parkway
College Park, MD 20740-3835

RE: GRN # 231 Modifications

Dear Ms. Valle,

As a follow-up to our telephone conversations regarding GRN #231, we are sending you new originals of pages 3, 127 and 128 to replace the current pages of the GRAS notice.

Changes were made to clarify the intended use, the regulatory classification of the infant formula LGG is intended to be added to and clarification on the meaning of the term "under the supervision of a physician", used in the notice.

If you have any questions, please feel free to contact me.

Sincerely,

(b)(6)

Matias Diez, PharmD
Associate Director, Regulatory Science North America

A Bristol-Myers Squibb Company

I. GRAS Exemption Claim

Pursuant to the criteria provided in proposed 21 CFR 170.36 (62 FR 18938; April 17, 1997; *Substances Generally Recognized as Safe (GRAS)*; the GRAS proposal), Mead Johnson & Company (MJ) hereby notifies the Food and Drug Administration that the use of *Lactobacillus* GG (LGG) in Exempt Hypoallergenic Infant Formula Powder with Extensively Hydrolyzed Casein and oils containing Docosahexaenoic Acid (DHA) and Arachidonic Acid (ARA) and without Medium-Chain Triglycerides (MCT) oil* at levels not exceeding 10^8 colony forming units of LGG per gram (cfu/g), intended for the feeding of term infants from the time of birth, is exempt from the pre-market approval requirements of the Federal Food, Drug, and Cosmetic Act, because MJ has determined that such use is generally recognized as safe (GRAS) through scientific procedures. MJ's GRAS determination does not encompass LGG's use by infants who might have immune problems.

* This formula meets the definition in 21 CFR 107.50(b), being an Infant Formula generally available at retail level.

(b)(6)

Matias R Diez
Associate Director, Regulatory Science North America
Mead Johnson & Company

Date

A. Name and address of notifier

Mead Johnson & Company
2400 W. Lloyd Expressway
Evansville, Indiana 47721-0001.

Contact:	Matias R Diez, Associate Director, Regulatory Science North America
Telephone:	(812) 429-5714
Mobile:	(812) 499-9515
Facsimile:	(812) 429-5054
E-mail:	matias.diez@bms.com

resistance genes to enterococcal strains via conjugation. As noted earlier, recent unpublished genetic sequencing information for LGG indicates that no analog to any known vancomycin resistance gene was found, confirming that resistance is a property of the cell wall structure. Moreover, LGG is susceptible to a number of other antibiotics in the rare event that this strain is associated with a clinical infection. (Charteris *et al.*, 2001). Based on these facts, it is apparent that the capability of LGG to transfer antibiotic resistance is extremely low or nonexistent.

IX. CONCLUSION

In conclusion, extensive research indicates that LGG has no adverse impact on nutritional, metabolic, or immune parameters at the level proposed for use in infant formula intended for healthy, term infants from the time of birth or for term infants with CMA or diarrhea from the time of diagnosis. Further, LGG has little potential for infectivity, with the possible exception of its use in infants who are severely immune compromised or have major gastrointestinal or other disorders (*i.e.*, short bowel syndrome, congenital heart disease). For this reason, it may be advisable that infants with severe immune deficiency, short bowel syndrome (SBS), or congenital heart disease (CHD) be fed infant formulas containing LGG only under the direct care and constant supervision of a physician, as is likely in any case.6 / MJ's formula to which LGG is intended to be added is not indicated for infants with short bowel syndrome or congenital heart disease. Typically infants

6 "Direct care and constant supervision of a physician" means that the physician will closely monitor the infant's health status before, during and after feeding the product; infants with SBS and CHD would typically be hospitalized and closely monitored by a physician. The term "supervision of a physician" used elsewhere in this notice refers to the fact that an exempt infant formula is typically recommended by a physician after examining the infant's special nutritional needs and general health status.

with those conditions are fed products containing MCT oil. In addition, proper sanitary procedures should be followed in preparing infant formula containing LGG (or any other probiotic) in the presence of infants with other significant medical interventions (*i.e.*, central lines).

LGG is an extremely well characterized strain of probiotic lactobacilli and has been used in food products, including dietary supplements, in both Europe and the United States for over 10 years. It has been used in infant formula in the EU since 2003, accruing over 8 million infant-days of consumption, and no adverse reactions have been reported. LGG has been evaluated in numerous clinical studies involving preterm and term infants at dose levels ranging from 10^8 to 10^{10} cfu per day. Infants in these studies received LGG for up to several months at a time and showed no evidence of adverse reactions or intolerance to treatment. In contrast, most subjects experienced a health benefit such as a reduced risk of experiencing diarrhea, shortening of the duration of acute diarrhea, or enhanced immune response following viral diarrhea. Both the published experimental evidence and the documented history of safe use of LGG confirm that there is a reasonable certainty that no harm will result from addition of LGG to infant formula at the levels proposed by Mead Johnson and under its intended conditions of use.

The GRAS status of Mead Johnson's intended use of LGG was confirmed through the deliberations of an Expert Panel consisting of Dennis M. Bier, M.D., Joseph F. Borzelleca, Ph.D., Roger A. Clemens, Dr.P.H., Michael P. Doyle, Ph.D., Berthold V. Koletzko, M.D., and Daniel J. O'Sullivan, Ph.D., who both individually and collectively reviewed the information contained in this monograph.

SU

Mead Johnson Nutritionals

2400 West Lloyd Expressway Evansville, IN 47721-0001 812-429-5000

June 16, 2008

RECEIVED
JUN 23 2008
BY: cmy

Paulette Gaynor, Ph.D. (HFS-255)
Consumer Safety Officer
Office of Additive Safety
Center for Food Safety and Applied Nutrition
Food and Drug Administration
5100 Paint Branch Parkway
College Park, MD 20740-3835

RE: Additional correspondence GRN # 231

This is an additional correspondence to GRN # 231 sent by Mead Johnson & Company (MJ) on August 1, 2007 regarding the safety of *Lactobacillus casei* ssp. *rhamnosus* GG (LGG). On June 11, MJ received a letter dated May 29, 2008 indicating the FDA has no questions regarding MJ's determination that LGG is GRAS under the intended conditions of use. In the notice, MJ indicated Valio as the supplier of the freeze-dried LGG powder. Since then, MJ and Valio have worked closely together to develop an additional source of high quality freeze-dried LGG powder for the intended conditions of use. This letter is to inform FDA that after a stringent qualification process, MJ has made a determination that LGG manufactured by culture supplier Chr Hansen A/S is equivalent to the LGG ingredient manufactured by Valio and described in GRN #231.

Chr Hansen is the world's largest culture supplier and has been manufacturing LGG for Valio for a number of years. LGG is produced by both Chr Hansen and Valio using standard fermentation techniques in facilities and under conditions that are suitable

A Bristol-Myers Squibb Company

for human food use. Both manufacturers use only food grade raw materials that meet the specifications of the Food Chemical Codex or the Code of Federal Regulations. While Valio's manufacturing process ensures the effective removal of any possible residual milk proteins from the ingredient following fermentation, considering the intended condition of use MJ worked with the new supplier to develop a new growth media without milk-based raw materials in order to virtually eliminate any possibility of milk allergens in the final ingredient. The new growth media replaces food grade hydrolyzed whey permeates and hydrolyzed whey/casein proteins with food grade yeast extract plus small quantities of required vitamins and minerals and dextrose as a carbon source.

To ensure that the LGG powder manufactured by Chr Hansen (CH-LGG) meets the required quality and safety standards as Valio-LGG, a qualification protocol was developed to guide the testing of relevant attributes of CH-LGG and compare them to Valio-LGG's. For this protocol, three completely independent batches of CH-LGG were manufactured specifically for MJ by Chr Hansen and compared to Valio-LGG. Product specifications, physical attributes, and shelf life were evaluated for all three batches and determined to be equivalent to Valio-LGG attributes.

To confirm that the CH-LGG is genetically identical to Valio-LGG, the genetic profile of LGG finished product from the three qualification batches from Chr Hansen was compared to Valio-LGG using Pulsed Field Gel Electrophoresis (PFGE). All three batches gave identical PFGE profiles to the Valio-LGG strain with all four restriction enzymes used, NotI, SfiI, AscI and FseI, which confirms that their identity and genetic profiles are the same and that this result can be consistently achieved. To ensure the

maintenance of the genetic profile, Chr Hansen adopts well controlled cell banking systems.

After evaluation of all the manufacturing process, raw material, product specification, genetic profile and stability data for all three batches, CH-LGG was determined to meet the technical and safety requirements for LGG and to be equivalent to the LGG produced by Valio.

The data and information that serve as the basis for the equivalency determination are available to the FDA upon request.

Sincerely,

(b)(6)

Matias Diez, PharmD
Associate Director, Regulatory Science North America