APPENDIX 7

PROTOCOL IMT-002

VisionCare
Ophthalmic Technologies Ltd.

A Prospective, Multicenter Clinical Trial Of the

Implantable Miniature Telescope (IMT™) In Patients with Central Vision Impairment Associated with Age Related Macular Degeneration or Stargardt's Macular Dystrophy

Protocol IMT-002
Amendment #1

February 10, 2003

Study Sponsor :
VisionCare Ophthalmic Technologies, Inc.
14375 Saratoga Avenue, Suite 104
Saratoga, CA 95070

I have read and agree to follow the study procedures as outlined in this protocol.

_____
Print Name of Investigator

_____ _____
Investigator's Signature Date

CONFIDENTIAL - DO NOT COPY

This protocol contains confidential proprietary information with respect to VisionCare products and clinical trials. I agree to hold this information in confidence and not to disclose it to any third parties for a period of three years from the date of this agreement, or until this information becomes a matter of public knowledge or until a formal agreement for that purpose has been entered into by the parties.

TABLE OF CONTENTS

TABLE OF CONTENTS 2
PERSONNEL AND FACILITIES 4
STUDY OUTLINE 5

1. INTRODUCTION & RATIONALE 8

2. STUDY OBJECTIVE 15

3. STUDY DESIGN 15

4. SAFETY AND EFFICACY PARAMETERS 16
   4.1 EFFECTIVENESS 16
   4.2 SAFETY 16

5. PATIENT POPULATION 16
   5.1 INCLUSION CRITERIA 16
   5.2 EXCLUSION CRITERIA 17

6. INVESTIGATIONAL MATERIALS 18
   6.1 DESCRIPTION OF INVESTIGATIONAL DEVICE 18
   6.2 DEVICE COMPONENTS 19

7. INVESTIGATIONAL PROCEDURES 21
   7.1 STUDY ENTRY 21
      7.1.1 PATIENT SCREENING 21
      7.1.2 INFORMED CONSENT 21
   7.2 PREOPERATIONAL PROCEDURES 21
      7.2.1 MEDICAL EVALUATION 21
      7.2.2 EXTERNAL TELESCOPE EVALUATION 23
   7.3 SURGICAL PROCEDURE 24
      7.3.1 PATIENT PREPARATION 24
      7.3.2 IMT IMPLANTATION 24
      7.3.3 LIMBAL INSERTION 24
      7.3.4 SCLERAL TUNNEL IMPLANTATION 25
   7.4 POSTOPERATIVE CARE 25
   7.5 EXAMINATION SCHEDULE 26
   7.6 CLINICAL PARAMETERS 27
   7.7 DATA REPORTING 27
   7.8 STUDY COMPLETION 28
      7.8.1 PATIENT COMPLETION 28
      7.8.2 PATIENT TERMINATION 28
      7.8.3 PATIENT EXIT 28

TABLE OF CONTENTS (CONT.)

8. STATISTICAL METHODS 28
8.1 SAMPLE SIZE 28
8.2 STATISTICAL ANALYSIS 30
8.2.1 PRIMARY EFFECTIVENESS ENDPOINT 30
8.2.2 PRIMARY SAFETY ENDPOINT 30
8.2.3 OTHER CLINICAL PARAMETERS 30
8.2.4 INTERIM CLINICAL REPORTS 30

9. ADVERSE EXPERIENCE REPORTING 32
9.1 ADVERSE EXPERIENCES 32
9.2 DEVICE MALFUNCTIONS 33

10. MONITORING 33

11. REFERENCES 34

APPENDICES

APPENDIX 1 PROPOSED PATIENT INFORMED CONSENT 35

APPENDIX 2 STUDY EXAMINATIONS
SCHEDULE & METHODS 41
EXAMINATION SCHEDULE & CLINICAL PARAMETERS 42
REFRACTION AND BCVA TESTING PROTOCOL 44
INTRAOCULAR PRESSURE MEASUREMENT 54
SPECULAR MICROSCOPY 58
VISION TRAINING 60

APPENDIX 3 SPONSOR'S COMMITMENTS 67

APPENDIX 4 INVESTIGATOR'S QUALIFICATIONS AND RESPONSIBILITIES 68

PROTOCOL AMENDMENTS

NATIONAL EYE INSTITUTE 25 ITEM VISUAL FUNCTION QUESTIONNAIRE (VFQ-25)

QUALITY OF LIFE QUESTIONNAIRE: ACTIVITIES OF DAILY LIFE

PATIENT CASE REPORT FORM (CRFs)

VISIONCARE OPHTHALMIC TECHNOLOGIES, INC.

A PROSPECTIVE, MULTICENTER CLINICAL TRIAL OF THE IMPLANTABLE MINIATURE TELESCOPE (IMT) IN PATIENTS WITH CENTRAL VISION IMPAIRMENT ASSOCIATED WITH AGE-RELATED MACULAR DEGENERATION (AMD) OR STARGARDT'S MACULAR DYSTROPHY

PROTOCOL IMT-002
AMENDMENT #1

PERSONNEL AND FACILITIES

STUDY SPONSOR

VisionCare Ophthalmic Technologies, Inc.
14375 Saratoga, Ave., Suite 104
Saratoga, CA 95070
(408) 872-9393 Phone
(408) 872-9395 Fax

MEDICAL MONITOR

Stephen S. Lane, M.D.
Associated Eye Care
232 North Main Street, Stillwater, MN 55082

INVESTIGATORS

This protocol will involve up to 30 clinical sites located in the continental United States. A complete list of Investigators is available from the Study Sponsor and will be kept on file with the U.S. Food & Drug Administration (FDA).

CLINICAL MONITOR

DataMed Devices, LLC
Kathryn L. Tsang and Associates
22022 Apache Drive
Lake Forest, CA 92630
(949) 458-6330 Phone
(949) 581-8106 Fax

Sponsor's Agent / Representative

A Prospective, Multicenter Clinical Trial Of the Implantable Miniature Telescope (IMT) In Patients with Central Vision Impairment Associated with Age-Related Macular Degeneration (AMD) or Stargardt's Macular Dystrophy

Study Outline

Objective

The primary objective of this pivotal Phase II/III study is to evaluate the safety and effectiveness of the Implantable Miniature Telescope (IMT) for the improvement of visual acuity in patients with bilateral moderate to severe central vision impairment due to age-related macular degeneration or Stargardt's macular dystrophy. Given favorable 12 month follow-up results, this trial is intended to form the basis for the submission of a Pre-Market Approval (PMA) application with the U.S. Food & Drug Administration to seek approval to market the IMT in the U.S.

Patient Population

A total of 200 eyes with bilateral, stable untreatable central vision disorders (untreatable AMD or Stargardt's macular dystrophy) will be implanted. The procedure will only be performed monocularly.

Study Design

This will be a prospective multicenter clinical trial in which a total of 200 consecutive eyes will be implanted and followed over 24 months at up to thirty (30) clinical sites. Enrollment will be continuous; however VisionCare will provide interim clinical reports to the Food & Drug Administration (FDA) at the following intervals:

- 3-month follow-up on the first 25 patients
- 3-month follow-up on the first 50 patients
- 3-month follow-up on the first 100 patients
- 3-month follow-up on the first 150 patients.

Patients will be screened for eligibility, and informed consent will be obtained from those who meet screening criteria and are interested in participating in the study. Eligible patients will be examined preoperatively to obtain a medical history and to establish a baseline for ocular condition. Baseline measurements will include successful use of an external telescope.

No patient may be enrolled in this study without prior written enrollment authorization approval from VisionCare. An Enrollment Authorization Form must be completed and approved by VisionCare personnel for each patient prior to treatment.

Postoperatively, patients will undergo a complete ophthalmic evaluation at regular intervals as specified in this protocol.

OUTCOME PARAMETERS

EFFECTIVENESS

The primary study outcome will be post-operative best corrected visual acuity. The procedure will be considered successful if there is an improvement of 2 lines or greater in either near or distance acuity in 50% of the implanted eyes at 12 months post-implantation.

Quality of Life (ADL and VFQ-25) will be used as secondary measurements of procedure success.

SAFETY

Primary safety outcomes will be endothelial cell loss, preservation of best corrected visual acuity (BCVA), and adverse events and complications.

ENDOTHELIAL CELL LOSS: The mean percentage endothelial cell loss will not exceed 17% one year post IMT implantation.

PRESERVATION OF BEST CORRECTED VISUAL ACUITY: No more than 10% of implanted eyes will experience a loss of more than 2 lines of either near or distance BCVA without a corresponding improvement (gain of 2 lines or more) in BCVA (a gain of 2 or more lines of near BCVA in eyes with loss of more than 2 lines distance BCVA, and vice versa).

EXAMINATION SCHEDULE

The examination schedule is as following:

- Preoperative evaluation (Day –45 to –3)
- Operative evaluation (Day 0, the day from which all future visits are scheduled)
- Day 1 (18 to 36 hours postoperative)
- Day 7 (4 to 10 days postoperative)
- 1 Month (2 to 6 weeks postoperative)
- 3 Months (6 to 18 weeks postoperative)
- Vision training at 1, 2, 4, 6, 10 and 12 weeks (+/- 4 days)
- 6 Months (18 to 32 weeks postoperative)
- 9 Months (32 to 44 weeks postoperative)
- 12 Months (44 to 56 weeks postoperative)
- 18 Months (66 to 78 weeks postoperative)
- 24 Months (90 to 102 weeks postoperative)

NOTE: The visit windows described above allow for the possibility that two visits could be scheduled within one week of each other. *This should*

NOT occur. Follow-up visits from 1 month through 24 months should not be scheduled less than six weeks after the previous visit.

CLINICAL PARAMETERS

The following clinical parameters will be measured:

1. Best corrected visual acuity (distance and near)
2. Manifest refraction
3. A-Scan (baseline only)
4. Intraocular pressure (by applanation tonometry)
5. Slit lamp examination
6. Fundus examination and photography (baseline only)
7. Fluorescein angiography (baseline only)
8. Endothelial cell count
9. Activities of Daily Life questionnaire/VFQ-25
10. Pachymetry

NOTE: All personnel at the study site who participate in the conduct of this study must be trained by the study Sponsor, the Clinical Monitor or their designee on the requirements of the protocol and the testing methods referenced therein. The Study Investigator or their designee familiar with the conduct of the Study is expected to train personnel who join the Study while it is in progress.

1.0 INTRODUCTION & RATIONALE

MACULAR DYSTROPHIES

Acquired and hereditary macular dystrophies are the leading cause of central vision impairment and blindness. Age related macular degeneration (AMD) is the most common form of macular dystrophy. Macular degeneration refers to the breakdown of cells in the macula (the center of the retina). Some degeneration is an inevitable consequence of the aging process. However, when it is coupled with the loss of sight in the central part of the field of vision, an underlying pathology is considered present. It is estimated that in the US, AMD affects 1% of all 55-year-olds, and the incidence increases with age, reaching approximately 15% among those aged 80 and over (1). With increasing longevity, it is anticipated that the incidence will increase significantly (1).

The main effect of AMD is to reduce the ability of the individual to engage in everyday activities that require clear central vision. It is associated with elevated risk of depression, increased levels of dependency, and an overall decrease in the quality of life (2-4). Currently there is no effective treatment for the majority of patients. For a minority of patients, (i.e., those with wet AMD resulting from choroidal neovascularization (CNV), advances in new therapies have led to improvements in the management of the rate of vision loss. New treatments include photodynamic therapy, trans-pupillary thermal therapy, submacular surgery and photoablation. However, no viable treatments are available for the several hundred thousand individuals with moderate to severe central vision loss due to late stage dry, atrophic AMD, end stage CNV with disciform scar and other maculopathies such as Stargardt's macular dystrophy.

The only corrective interventions currently available are low vision aids such as special spectacles and head-mounted or hand-held telescopes, which magnify images onto the retina. These aids are widely available but have only limited acceptance by patients. Patients find these aids bulky, uncomfortable and unattractive. In addition, use of external telescopes requires suppression of natural eye movements. Instead, the patient has to learn to scan the visual field by moving his/her entire head. If not properly adapted to this behavioral change requirement, a conflict between the visual and vestibular systems will arise, resulting in nausea.

THE IMPLANTABLE MINIATURE TELESCOPE (IMT)

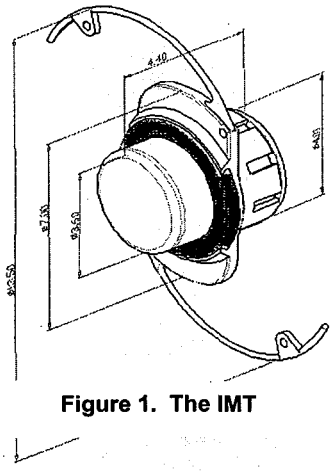

Figure 1. The IMT

VisionCare's Implantable Miniature Telescope (IMT™) is an intraocular implant which, when combined with the optics of the cornea, constitutes a telephoto lens (Figure 1). The IMT contains two micro lenses, which magnify objects in the central visual field, allowing the patient to see without the need of external low-vision aids. A magnified image is projected by the IMT onto the retina, enabling the patient to recognize and identify objects that could not otherwise be seen. The IMT provides improved near or distance vision correction in the same fashion as an external telescope (Figure 2). The optical component is embedded in a carrier, which is intended to be implanted in the capsular bag in the posterior chamber of the eye, in place of the eye's crystalline lens. It is held in position by haptic loops using a surgical procedure similar to that used in refractive cataract surgery.

The IMT is indicated for use in patients with bilateral, stable macular degeneration or Stargardt's macular dystrophy. Vision loss must be sufficiently advanced to have caused significant or complete loss of normal central vision, but adequate peripheral vision must be retained. The IMT is only implanted in one of the patient's eyes. In this way, the implanted eye provides central vision and the non-implanted eye can continue to provide peripheral vision.

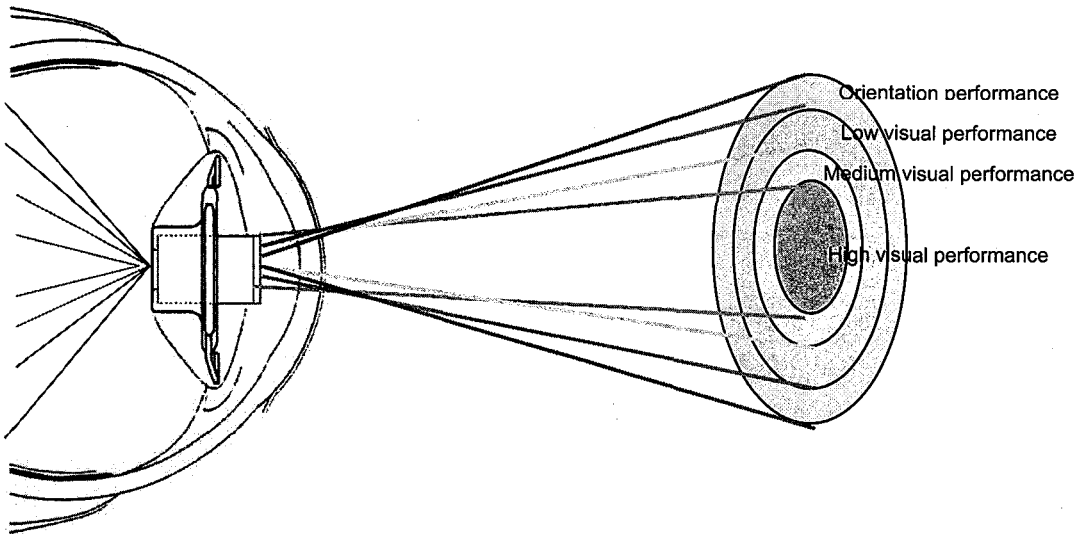

Figure 2. Image quality distribution with the IMT

ADVANTAGE OF THE IMT OVER ALTERNATIVE LOW VISION TREATMENTS

The primary advantage of the IMT over alternative treatments for low vision is that the IMT allows scanning of reading materials and other images using natural eye movements, rather than head movements. Since there is no relative movement between the eye and the telescope, there are no optical aberrations and a wider visual field (central field of 20° or more on the retina) is achieved. The placement of the magnifying device entirely inside the eye eliminates increased speed of motion and vestibular conflict.

If there is further deterioration of the macula after the implantation, the amount of magnification can be significantly increased by bringing the object closer to the eye and adding low-plus eyeglasses (+1.00 to +3.2 D). With glasses, up to 8X magnification can be achieved at 18 cm with the Wide Angle (WA) 3.0X IMT.

DIFFERENT MAGNIFICATIONS AVAILABLE

For this study the IMT is available in two magnifications:

- Wide Angle (WA) 2.2X
- Wide Angle (WA) 3.0X

Both lenses are predominantly for the restoration of intermediate-far vision (increasing the ability to view objects several meters away from the patient; enables better spatial orientation).

Patients will be given the opportunity to choose which type of visual restoration is more meaningful in their lives by wearing the different corresponding external telescopes for a proper period of acclimation before selecting the IMT that is likely to provide the preferred vision enhancement.

INITIAL CLINICAL EXPERIENCE

PHASE I RESULTS

Phase I of an FDA-approved IMT clinical study (IDE G000115) was completed with 12 months of patient follow-up. A total of 15 patients were enrolled, and the IMT was implanted in 14 eyes. One eye was not successfully implanted due to an inadequate capsulorhexis associated with capsular tear that was further complicated by vitreous loss and choroidal hemorrhage. As a result of these intraoperative complications, the surgical procedure was aborted. This patient was subsequently excluded from all data analyses. All remaining 14 patients completed the 3-month and 6-month examinations and 13 patients returned for the 12-month examination. One patient died before the 12-month visit.

NOTE: The model IMT used in this Phase I study was a 3.0X, since the study was conducted before the availability of any Wide Angle IMT's.

PATIENT DEMOGRAPHICS

The study cohort was composed of 14 eyes from 14 patients with a mean age of 80 years (range 74-89 years). Over half of all patients (64.3%) were female. At baseline, all patients had normal slit lamp examination, other than the presence of a cataract, and normal intraocular pressures.

TABLE 1. PATIENT DEMOGRAPHICS

GENDER		AGE (YEARS)		RACE	
Male 5/14 (35.7%)	Female 9/14 (64.3%)	Range 74-89	Mean 80	Caucasian 14/14 100%	Other 0%

IMPROVEMENT OF 2 LINES OR GREATER

At 3 months, 11 (78.6%) of 14 patients were reported with an improvement of 2 lines or greater in either the distance or near BCVA. At 6 months, nine (64.3%) of 14 patients experienced an improvement of 2 lines or greater in either distance or near BCVA. At 12 months, ten (76.9%) of 13 patients experienced an improvement of 2 lines or greater in either distance or near BCVA. Thus, the majority of eyes had at least a 2-line improvement in either near or distance best corrected acuity over the course of the study. Figure 3 graphically displays the lines of improvement in either distance or near best corrected acuity 12 months post-IMT implantation.

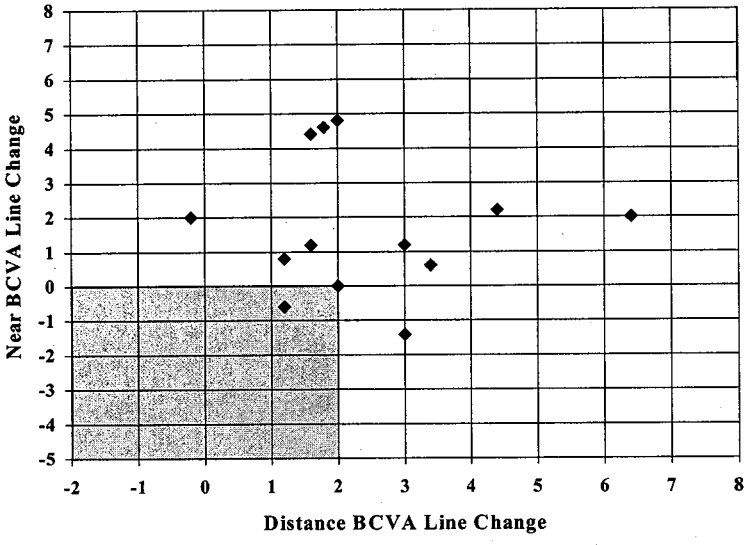

FIGURE 3. Improvement of Vision 12 months post-implantation

DISTANCE VISUAL ACUITY

Best corrected distance visual acuities for the 14 implanted patients are summarized in TABLE 2, below. Seven (50.0%) of the 14 patients at 3 months and 6 months had an improvement of 2 lines or more in distance BCVA and seven (53.8%) of the 13 patients examined at 12 months experienced an improvement of 2 lines or more in distance BCVA. One patient (001-01-003) had a loss of one line of best corrected distance acuity, from 20/100 to 20/163, at 3 months, however, best corrected near visual acuity improved from 20/533 (20/266 at 6") to 20/60 during the same period. At 6 months and 12 months, best corrected distance acuity for this eye improved to 20/100 and 20/80, respectively.

TABLE 2. BEST CORRECTED DISTANCE VISUAL ACUITY AT 3, 6 AND 12 MONTHS

DISTANCE VISUAL ACUITY	3 MONTHS (n =14)		6 MONTHS (n =14)		12 MONTHS (n =13)	
	n	%	n	%	n	%
Gained two or more lines from baseline	7	50.0%	7	50.0%	7	53.8%
Gained one line from baseline	1	7.1%	3	21.4%	5	38.5%
Less than one complete line change from baseline (no change)	5	35.7%	4	28.6%	1	7.7%
Lost one line from baseline	1	7.1%	0	0.0%	0	0.0%
Lost two or more lines from baseline	0	0.0%	0	0.0%	0	0.0%
TOTAL	14	100 %	14	100%	13	100.0%

NEAR VISUAL ACUITY

Results of best corrected near visual acuity are shown in TABLE 3. Of the 14 implanted patients, 8 (57.1%) and 6 (42.9%) of the 14 patients experienced an improvement of 2 lines or greater in near BCVA at 3 months and 6 months, respectively. Six (46.1%) of the 13 patients at 12 months experienced an improvement of 2 lines or greater in near BCVA.

TABLE 3. BEST CORRECTED NEAR VISUAL ACUITY AT 3, 6 AND 12 MONTHS

NEAR VISUAL ACUITY	3 MONTHS (n =14)		6 MONTHS (n =14)		12 MONTHS (n =13)	
	n	%	n	%	n	%
Gained two or more lines from baseline	8	57.1%	6	42.9%	6	46.1%
Gained one line from baseline	2	14.3%	2	14.3%	2	15.4%
Less than one complete line change from baseline (no change)	1	7.1%	2	14.3%	4	30.8%
Lost one line from baseline	2	14.3%	2	14.3%	1	7.7%
Lost two or more lines from baseline	1	7.1%	2	14.3%	0	0.0%
TOTAL	14	100 %	14	100%	13	100%

A total of six patients experienced a loss of one or more lines of near BCVA at either 3 or 6 months; only one of the patients who returned for examination at 12 months lost one or more lines of vision.

ENDOTHELIAL CELL DENSITY

Endothelial cell density (ECD) and change in ECD from baseline to 3, 6 and 12 months are shown in TABLE 4 below. Baseline endothelial cell counts ranged from 1733 to 2916 cells/mm^2 with a mean of 2247.6 cells/mm^2 and a standard deviation of 314.6 cells/mm.^{2} Mean endothelial cell loss was 6.7% (S.D. 16.4%) at 3 months, 13.0% (S.D. 13.6%) at 6 months, and 13.2% (S.D. 17.3%) at 12 months. These percentage changes from baseline to 3, 6 and 12 months are within 17%, the average endothelial cell loss reported in a survey of published literature on large-incision cataract surgery. However, the wide range of endothelial cell loss (-45.8% to +15.4%) led to an examination of the cell count data by patient. A single implanted eye (Patient 001-005) had a loss in endothelial cell density from 2,400 cells/mm^2 to 1,300 cells/mm,^{2} at 3 months, accounting for a loss of 45%. However, no further loss in cell density was reported at 6 or 12 months, at which time endothelial cell density remained stable at 1,300 cells/mm.^{2}

TABLE 4. RESULTS OF ENDOTHELIAL CELL DENSITY MEASUREMENTS AT 3, 6 AND 12 MONTHS

ENDOTHELIAL CELL DENSITY (CELLS/MM^2)	BASELINE	3 MONTHS (n = 14)	6 MONTHS (n = 14)	12 MONTHS (n = 13)
MEAN	2247.6	2085.6	1935.5	1934.23
STANDARD DEVIATION	314.6	425.1	292.4	354.7
RANGE	1733 to 2916	1300 to 2710	1300 to 2406	1086 to 2300
% CHANGE FROM BASELINE				
MEAN	---	-6.7%	-13.0%	-13.2%
STANDARD DEVIATION	---	16.4%	13.6%	17.3%
RANGE	---	-45.8% to 15.3%	-45.8% to 14.7%	-45.8% to 15.4%

COMPLICATIONS AND ADVERSE EVENTS

Of the 14 eyes implanted with an IMT, complications and/or adverse events were reported for 10 eyes. Additionally, two non-ocular events were reported; these included the death of one study patient 10 months after implantation of the IMT, and surgical removal of a kidney stone approximately 30 days following implantation of the IMT.

The 10 ocular events included one report of mild pigment on the lens at 1 month, that resolved without intervention, and a report of closure of a peripheral iridotomy with pigment, observed at 1 month. This was successfully treated with Nd:YAG iridotomy. The remaining 8

events consisted of late intraocular inflammation, i.e., observed one month or more postoperatively, with varying clinical signs, including anterior chamber cells, fibrin, conjunctival injection, iritis and anterior uveitis. Two of the 8 reports of late intraocular inflammation cases were mild and transient, resolving in approximately two weeks with appropriate steroid treatment. The other six cases required steroid treatment of longer duration, however, in all but a single eye with recurring symptoms, the inflammation resolved without sequelae. Investigation into the cause of this delayed intraocular inflammation revealed an inadequate course perioperative and postoperative steroid treatment, given the large incision and the size of the IMT. Additionally, late intraocular inflammation was not observed at clinical sites which followed a regimen consisting of a depot injection of steroid at the end of surgery, followed by longer-term postoperative steroid use, tapering over time.

CONCLUSIONS FROM THE FEASIBILITY STUDY

The experience from this U.S. feasibility study of the IMT provides initial evidence of safety and effectiveness. The majority of patients experienced an improvement in best corrected distance and/or near visual acuity, and all but one of the complications and adverse events resolved without sequelae. Given the absence of treatment alternatives for this patient population, the benefits associated with implantation of the IMT appear to outweigh the risks to the patient, and support the conduct of a pivotal Phase II/III clinical trial as proposed in this protocol.

2.0 STUDY OBJECTIVE

The primary objective of this pivotal Phase II/III study is to evaluate the safety and effectiveness of the Implantable Miniature Telescope (IMT) for the improvement of visual acuity in patients with bilateral moderate to severe central vision impairment due to age-related macular degeneration or Stargardt's macular dystrophy. Given favorable 12 month follow-up results, data from this trial is intended to form the basis for the submission of a Pre-Market Approval (PMA) application with the U.S. Food & Drug Administration to seek approval to market the IMT in the U.S.

3.0 STUDY DESIGN

This will be a prospective multicenter clinical trial in which a total of 200 consecutive patients will be implanted and evaluated at a maximum of thirty (30) clinical sites and followed over a 24-month period. No patient may be enrolled in this study without prior written enrollment authorization approval from the Sponsor or their designee. An Enrollment Authorization Form must be completed and approved by the Sponsor or designee for each patient prior to treatment.

4.0 SAFETY & EFFECTIVENESS PARAMETERS

4.1 EFFECTIVENESS

An improvement of 2 lines or greater in either near or distance best corrected acuity in 50% of the implanted eyes at 12 months post-implantation.

4.2 SAFETY

4.2.1 Endothelial cell loss: Mean percentage endothelial cell loss less than or equal to 17% at one year post IMT implantation.

4.2.2 Preservation of best corrected visual acuity, i.e., no more than 10% of implanted eyes will experience a loss of more than 2 lines of either near or distance BCVA without a corresponding improvement (gain of 2 lines or more) in BCVA (a gain of 2 or more lines of near BCVA in eyes with loss of more than 2 lines distance BCVA, and vice versa).

4.2.3 Adverse events and complications.

5.0 PATIENT POPULATION

A total of two hundred (200) consecutive patients who have provided informed consent, been implanted with the IMT, who are capable of comprehending the nature of the study, and who are likely to comply with the visit schedule, are to be entered into the study provided they conform to the following criteria.

5.1 INCLUSION CRITERIA

- Patients with bilateral, stable, untreatable central vision disorders (untreatable AMD or Stargardt's macular dystrophy) as determined by fluorescein angiography, and cataract.
- Patients must have distance BCVA between 20/80 and 20/800, and adequate peripheral vision in one eye (the non-implanted eye) to allow navigation.
- Patients must achieve at least a five letter improvement on the ETDRS chart in the eye scheduled for surgery, with the external telescope.
- The planned operative eye must have an anterior chamber depth of $\geq$ 2.5mm.
- Patients must be available for the study duration of approximately 24 months and be willing to attend all visits for training and evaluation.
- Patients must be alert, mentally competent, and able to understand and comply with the requirements of the clinical trial, and be personally motivated to abide by the requirements and restrictions of the clinical trial.

- Patients must be able to provide voluntary informed consent.
- Patients must not meet any of the exclusion criteria below.
- Patients must be at least 55 years of age.
- Patients must sign and be given a copy of the written Informed Consent form.

5.2 EXCLUSION CRITERIA

- Evidence of active CNV on fluorescein angiography or treatment for CNV within the past six months.
- Patients who may require cataract extraction and intraocular lens implantation during the first 12 months following IMT implantation in the fellow eye. If cataract extraction is anticipated, this procedure should be performed at least 30 days prior to enrollment in the clinical study.
- Patients who have had or are expected to have ophthalmic related surgery within the 30 days preceding implantation of the IMT.
- The planned operative eye has:
  - Myopia >6.0 D.
  - Hyperopia > 4.0 D.
  - Axial length less than 21 mm.
  - Endothelial cell density less then 1600 cells/mm^2
  - Narrow angle, i.e., less than Schaefer grade 2.
  - Stromal or endothelial dystrophies or disorders.
  - Inflammatory ocular disease.
  - Zonular weakness/instability of crystalline lens; pseudoexfoliation.
  - Diabetic retinopathy.
  - Untreated retinal tears.
  - Retinal vascular disease.
  - Optic nerve disease.
  - History of retinal detachment
  - Retinitis pigmentosa.
  - Any intraocular tumor and medical or ophthalmic condition that in the opinion of the Investigator renders the subject unsuitable for participation in the study.
- Any ophthalmic pathology that compromises the patient's peripheral vision in the fellow eye.
- Patients with an ocular condition that predisposes the patient to eye rubbing.
- Patients with significant communication impairments or severe neurological disorders that would prevent or interfere with the study requirements.
- Patients who have undergone previous intraocular or corneal surgery of any kind in the operative eye(s), including any type of surgery for either refractive or therapeutic purposes.
- Patients who have a history of steroid-responsive rise in

intraocular pressure, uncontrolled glaucoma, or preoperative IOP >22 mm Hg.

- Patients who are pregnant, plan to be pregnant or are lactating, during the course of the study.
- Patients with known sensitivity to planned study concomitant medications.
- Patients participating in any other ophthalmic drug or device clinical trial during the time of this clinical investigation.

6.0 INVESTIGATIONAL MATERIALS

6.1 DESCRIPTION OF THE INVESTIGATIONAL DEVICE

In this study the IMT is available in two magnifications:

- Wide Angle (WA) 2.2X
- Wide Angle (WA) 3.0X

Both lenses are designed predominantly for the restoration of intermediate-far vision (increasing the ability to view objects several meters away from the patient; enables better spatial orientation).

Device configuration and components are shown in Figure 4, and described below.

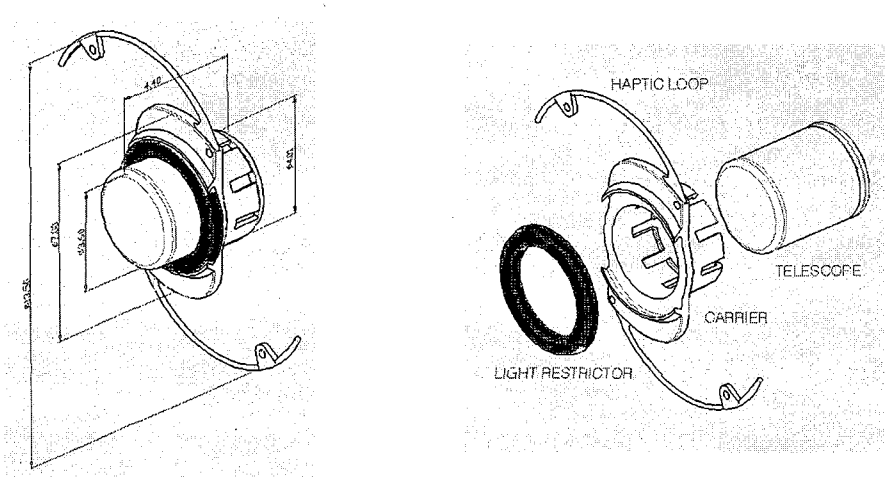

FIGURE 4. 3.0X IMT (LEFT) AND WA IMT COMPONENTS

The IMT is composed of three primary components; quartz glass optics, a clear polymethyl methacrylate (PMMA) carrier, and a blue PMMA light restrictor. The optical component is snap-fitted into the carrier. All materials are `biocompatible for long-term

ocular implantation per ISO 10993. One of the internal components (not in contact with body fluids or tissue) of the IMT includes the use of stainless steel which may interfere with the safe use of Magnetic Resonance Imaging (MRI). Until the IMT's MRI compatibility has been established it is considered contraindicated. The IMT is assembled and packaged in a class 10,000 clean room and is sterilized by ethylene oxide. TABLE 5 compares the overall dimensions and physical characteristics of the two IMT models used in this study.

TABLE 5. OVERALL DIMENSIONS AND PHYSICAL CHARACTERISTICS OF THE IMT MODELS

FEATURE	WA 2.2X IMT	WA 3.0X IMT
DIMENSIONS		
$Ø_T$	13.5 mm	13.5 mm
$Ø_B$	Max: 7.0 mm Min: 4.50 mm	Max: 7.0 mm Min: 4.50 mm
Length	4.4 mm	4.4 mm
WEIGHT		
Air	121.7 mg	117.5 mg
Aqueous	63.7 mg	59.6 mg

6.2 DEVICE COMPONENTS

6.2.1 TELESCOPE

The IMT provides sufficient image resolution for different tasks such as reading, face recognition and TV watching at graded visual fields of up to maximum of 12° (36.0° on the retina) for the wide angle 3.0X model and 16° (35.0° on the retina) for the wide angle 2.2X model. The wide angle IMTs provide patient orientation abilities at a visual angle of 20° (60.0° on the retina) for the 3.0X model and 24° (52.8° on the retina) for the 2.2X model.

TABLE 6 compares and contrasts the optics features for the IMT models used in this study.

TABLE 6. TELESCOPE OPTICAL FEATURES FOR THE IMT MODELS

FEATURE	WA 2.2X IMT	WA 3.0X IMT
OVERALL DIMENSIONS		
DIAMETER	3.6 mm	3.6 mm
LENGTH	4.4 mm	4.4 mm
OPTICAL DIAMETER	3.2 mm	3.2 mm
MAGNIFICATION INSIDE	2.2X	3.0X

FEATURE	WA 2.2X IMT	WA 3.0X IMT
THE EYE		
OPTIMAL FOCUSING DISTANCE	3 m	3 m
DEPTH OF FOCUS	1.2 m – 6 m	1.2 m – 6 m
RELATIVE BRIGHTNESS	0.3	0.4
OPTICAL RESOLUTION	MTF[1] ranges from 0.3 – 0.87 MTF[1] measurable angles of 10° and 15°; values range from 0.02 (nominal) – 0.75	MTF[1] ranges from 0.3 – 0.87 MTF[1] measurable angles of 10° and 15°; values range from 0.02 (nominal) – 0.75

6.2.2 CARRIER & LOOPS

In the Wide Angle 2.2X and 3.0X models, the telescope is snap fit into a one-piece, transparent, medical grade PMMA carrier with loops. The loops range in thickness from 0.18 mm – 0.20 mm and are positioned at a 12.7° angulation from planar and have two sets of positioning holes, one set on the carrier body and another on the loops.

6.2.3 LIGHT RESTRICTOR

A blue PMMA light restrictor on the anterior surface of the device reduces the amount of light penetrating around the device optic to the retina.

[1] Modulation transfer function (MTF) is a set of numbers from 0-1, which characterizes the degradation caused by the tested optical system (eg, human eye), where 1 is a perfect optical system with no degradation of the image; for numbers close to 0, the image cannot be discerned at all. MTF for the IMT's is measured at acute half angles 2^0 and $5.^0$

7.0 INVESTIGATIONAL PROCEDURES

7.1 SUBJECT ENTRY

7.1.1 PATIENT SCREENING

Prior to enrollment in the study, interested patients will be evaluated to determine eligibility. The Investigator or a designee will explain the study purpose, procedures, and patient responsibilities to the potential participant. The patient's willingness and ability to meet the follow-up requirements will be determined. No patient may be implanted in this study without prior written enrollment authorization approval from the Sponsor or their designee. An Enrollment Authorization Form must be completed and approved by the Sponsor or their designee for each patient prior to treatment.

7.1.2 INFORMED CONSENT

When it has been established that the patient may be eligible, written informed consent will be obtained (**Appendix 1**). The patient will sign and date the consent form in the presence of a witness. The Investigator will also sign and date the consent form. One copy of the informed consent form will be retained with the patient records and a copy will be provided to the patient. The patient is now considered enrolled.

7.2 PREOPERATIVE PROCEDURES

7.2.1 EXTERNAL TELESCOPE EVALUATION

Visual acuity with an external telescope will be performed using ETDRS (Early Treatment Diabetic Retinopathy Trial) charts. Testing will be done in accordance with the BCVA & Refraction Testing Protocol in **APPENDIX 2.2**.

VisionCare will provide two or more sets of 2.2X and 3.0X external telescopes with reading caps to each site for use in the trial. These telescopes are to be used for all in-office testing and be given to potential patients to try at home for a period of at least three days.

Patients must achieve at least a five letter improvement on the ETDRS chart in the eye scheduled for surgery with at least one of the external telescopes in order to be allowed to proceed with the surgery. Patients who do not meet this criteria will be excluded from the trial. This exclusion will be noted in the screening log at each site.

Following is a table detailing the necessary steps for patient evaluation with the external telescope models.

TABLE 7. PREOPERATIVE EXTERNAL TELESCOPE EVALUATION

STEP	ACTION
1	With the patient sitting in a chair, the external wide angle 3.0X telescope is placed over the patient's distance correction in a trial frame. It should be communicated to the patient that the external telescope is intended to provide the patient with a simulated experience of the magnification, clarity and visual field (slightly less than the corresponding WA 2.2X or 3.0X IMT) that can be expected with the IMT.
2	Each eye should be tested individually. The fellow eye should be covered with a paddle, and then uncovered and the patient questioned on preference for one eye over the other. It is important to gauge the patient's ability to use the telescope with the fellow eye not covered. The patient should be able to use the telescope with the fellow eye uncovered. Failure to do so may indicate strong dominance of the second eye; this should be considered in the determination of the eye to be selected for surgery.
3	At a distance of approximately 3 meters, the patient should be asked to look at another person's face while an assistant repeatedly puts on and takes off the telescopes. The patient is asked to compare vision with each telescope. It is important to determine what the patient hopes to achieve through implantation of the IMT™ and to ensure that these goals are within the anticipated improvement in vision that may be provided by the device.
4	This testing should be repeated for the 2.2X telescope.
5	If the patient achieves a 5-letter improvement in visual acuity with either or both of the external telescopes, he/she is a candidate for implantation, and should be given external telescopes to take home and use in practice sessions for at least three days. Patients should be instructed to attempt daily tasks and activities such as watching television (from 2-3 meters), making coffee, reading, washing hands, etc., while wearing the external telescope(s) in order to provide the patient with a simulation of the visual acuity that may be achieved with the IMT.
6	For safety reasons, the patient should be trained in the use of the telescope while he / she practices walking. They should NOT be allowed to walk about unassisted until they have grown accustomed to the use of the telescope.

STEP	ACTION
7	The patient should return for examination following this in-home trial with the external telescopes. If it is determined that the patient is interested in participating in the study, ETDRS visual acuity should be measured using both external telescopes (refer to Appendix 2 for methods for refraction and ETDRS acuity). The patient must achieve a five letter or greater improvement in distance visual acuity with at least one of the telescope to be a candidate for IMT implant. Data should to be collected and recorded on the use of both external telescopes regardless of which is preferred by the patient.
8	If the patient has BCVA better than 20/200 in either eye, the eye with worse visual acuity will be designated for implantation.
9	If BCVA is equal to or worse than 20/200, or if visual acuity is the same in both eyes, the choice of the eye to be implanted is left to the discretion of the physician and patient. **NOTE:** Patients with an IOL in one eye may have the IMT implanted only in the other eye.

7.2.2 SCREENING FOR ELIGIBILITY AND BASELINE EVALUATION

Once it has been determined that the patient experienced improvement in visual acuity during the trial period of use of external telescope(s), the patient will be further evaluated for eligibility, with the following measurements:

- Distance best spectacle corrected visual acuity
- Near best spectacle corrected visual acuity
- Manifest refraction
- Intraocular pressure by applanation tonometry
- Slit lamp exam
- Fluorescein angiography
- Dilated fundus examination and photography
- Specular microscopy (*may be performed before or after home use of external telescopes*)
- Pachymetry
- A-scan

Results from these procedures can be used for the baseline evaluation if they are obtained ***within 45 days before IMT implantation***. Testing performed more than 45 days prior to surgery must be repeated prior to IMT implantation. Detailed information pertaining to patient examinations and the methods of examination is found in Appendix 2.

7.3 SURGICAL PROCEDURE

The IMT procedure will be performed on Day 0 of the study by the Investigator or a Co-Investigator, as described below.

7.3.1 PATIENT PREPARATION

STEP	PROCEDURE
1	Anesthesia is induced by retrobulbar or peribulbar injection.
2	Mydriatic agents are administered to ensure adequate pupil dilation during surgery.
3	A lid speculum is placed on the eye to be implanted, to provide the maximum corneal exposure.
4	The operating microscope, is positioned over or in front of the eye to be treated. Illumination from the operating microscope provides adequate visualization during the procedure.

7.3.2 IMT IMPLANTATION

The IMT procedure may be performed using either a limbal insertion technique or a scleral tunneling procedure. Both surgical approaches are described below.

7.3.3 LIMBAL INSERTION

STEP	ACTION
1	An 8 mm – 10 mm limbal incision is made at the 120^0-160^0 meridians, as in standard cataract surgery.
2	A paracentesis is performed and ophthalmic viscosurgical device (Healon V or equivalent) is injected into the anterior chamber.
3	After the incisions are made, a continuous curvilinear capsulorhexis of approximately 6.5 mm is made in the lens capsule.
4	Phacoemulsification or extra-capsular cataract extraction (ECCE) is performed to remove the lens.
5	Ophthalmic viscosurgical device (Healon V or equivalent) is injected into the anterior chamber and the capsular bag, and used to coat the IMT.
6	The IMT is implanted in the capsular bag: 1. Both loops are placed inside the capsular bag; 2. The cornea is sutured; and 3. The loops of the IMT are rotated to the 12:6 o'clock position.

STEP	ACTION
7	The pupil is constricted.
8	The ophthalmic viscosurgical device (OVD) agent is removed.
9	A peripheral iridectomy is performed.
10	The incision is tested for leakage.

7.3.4 SCLERAL TUNNEL IMPLANTATION

STEP	ACTION
1	The conjunctiva and Tenon's fascia are opened from the 10 o'clock to the 2 o'clock position.
2	A paracentesis is performed and ophthalmic viscosurgical device (Healon V or equivalent) is injected into the anterior chamber.
3	A continuous curvilinear capsulorhexis of approximately 6.5 mm is created in the lens capsule.
4	A 10 mm scleral incision is performed 2.5 mm – 3 mm posterior to the limbus. A tunnel is then created which opens into the anterior chamber at the limbus.
5	Phacoemulsification or extra-capsular cataract extraction (ECCE) is performed to remove the lens.
6	The IMT is implanted in the capsular bag: 1. The IMT is inserted through the scleral tunnel into the capsular bag; 2. Both loops are placed inside the capsular bag; 3. The scleral tunnel is sutured; and 4. The loops of the IMT are rotated to the 12:6 o'clock position.
7	The pupil is constricted.
8	The ophthalmic viscosurgical device (OVD) agent is removed.
9	A peripheral iridectomy is performed.
10	The incision is tested for leakage.

Irrespective of the surgical technique utilized, a sub-Tenon's injection of betamethasone depot (or appropriate substitute) will be administered at the end of surgery.

7.4 POST-OPERATIVE CARE

Following surgery, based on the Phase I results discussed in Section 1 of this protocol (see Complications and Adverse Events) while taking into consideration individual

patient characteristics, the study Sponsor encourages Investigators to adhere to the following standardized regimen of topical ophthalmic medications:

1. One drop of a topical ophthalmic antibiotic solution should be administered following surgery, and then continued as per product labeling for at least two days.

2. One drop of Voltaren Ophthalmic (diclofenac sodium 0.1%, CIBA Vision Ophthalmics) or equivalent should be administered following surgery, and then continued as per product labeling for at least two days.

3. Prednisolone acetate (1%) or equivalent should be administered every 2 waking hours for the first two weeks post-implantation, followed by administration every 4 waking hours for 2-4 weeks.

4. The prednisolone acetate (1%) should be gradually tapered over the next 4 to 6 weeks for a total duration of postoperative steroid treatment of approximately 3 months.

5. Homatropine 5% or a similar drug should be administered twice daily for 4 to 6 weeks postoperatively. If homatropine is inadequate to maintain cycloplegia, atropine may be used.

NOTE: *The above postoperative regimen of anti-inflammatory medications may be too aggressive for some patients and could result in medicamentosa. The Investigator should, in considering the Phase I observations, exercise clinical judgment in deciding if a more moderate or rapid tapering of the topical steroid regimen is indicated for some patients.*

7.5 EXAMINATION SCHEDULE

Subjects will be examined and evaluated according to the following schedule of visits:

• Preoperative Evaluation	(Day -45 to Day -3)
• Operative Evaluation	(Day 0 – date from which all future visits are calculated)
• Day 1	(18 to 36 hours postoperative)
• Day 7	(4 to 10 days postoperative)
• 1 Month	(2 to 6 weeks postoperative)
• 3 Month	(6 to 18 weeks postoperative)
• Vision training	(week 1, 2, 4, 6, 10 and 12, +/- 4 days)
• 6 Month	(18 to 32 weeks postoperative)
• 9 Month	(32 to 44 weeks postoperative)
• 12 Month	(44 to 56 weeks postoperative)
• 18 Month	(66 to 78 weeks postoperative)
• 24 Month	(90 to 102 weeks postoperative)

A full description of the examination schedule and clinical parameters can be found in **APPENDIX 2**.

***NOTE**: The visit windows described above allow for the possibility that two visits could be scheduled within one week of each other. This should NOT occur. Follow-up visits from 1 month through 24 months should not occur less than six weeks after the previous visit.*

7.6 CLINICAL PARAMETERS

The clinical parameters to be evaluated are:

1. Pinhole acuity (safety assessment) on day 1 and manifest refraction on day 7
2. Best spectacle-corrected distance acuity, using ETDRS VA charts: preoperative, months 1, 3, 6, 9, 12, 18, 24 and any interim visits
3. Best spectacle-corrected near visual acuity, using MN charts: preoperative, months 1, 3, 6, 9, 12, 18, 24 and any interim visits
4. Manifest refraction (no auto-refraction); preoperative, day 7, months 1, 3, 6, 9, 12, 18, 24 and any interim visits
5. Pachymetry: preoperative, 3, 6, 9, 12, 18 and 24 months
6. Intraocular pressure (applanation): all visits
7. Slit lamp examination: all visits
8. Fundus examination (dilated) and photography: preoperative
9. Fluorescein angiography: preoperative
10. Specular microscopy of the central cornea: preoperative, 3, 6, 9, 12, 18 and 24 months
11. Activities of Daily Life (ADL) & VFQ-25 questionnaire: preoperative, 3, 6, 9, and 12 months

Postoperative visual examinations may be performed by the Investigator, or by ophthalmic technicians, optometrists and/or ophthalmologists under the supervision of the Investigators using methods described in **APPENDIX 2**. At each postoperative visit, information concerning the preoperative examination and previous postoperative examinations should not be made available to the individual conducting the examination until all the postoperative examinations are completed. All preoperative and postoperative examinations will be performed using comparable pieces of equipment at each site.

7.7 DATA REPORTING

A Case Report Form (CRF) booklet will be provided by the Sponsor or its designee for each patient enrolled in the study. A sample Case Report Form may be found in **APPENDIX 6**. The appropriate Case Report Form will be completed and signed by the Investigator at each examination. All Case Report Forms will be completed in a legible manner in black ink. Any corrections will be made by drawing a single line through the incorrect entry, entering the correct information, and initialing and dating the change.

Data entries boxes or spaces should not be left blank, but instead should indicate: NA = not applicable, ND=not done or with a "-" for missing or not available data. The original signed forms, not copies, will be returned to the Sponsor.

All clinical data generated in the study will be submitted to the Sponsor or its designee for quality assurance review, data entry, and statistical analysis. All forms will be reviewed for completeness and evident recording errors will be rectified by contact with the appropriate clinical site. Double-entry routines will be utilized to reduce data entry errors, and computerized editing routines will be used to identify unusual data entries for verification prior to statistical analysis.

7.8 STUDY COMPLETION PROCEDURES -

7.8.1 PATIENT COMPLETION

Patients are considered to have completed the study if they have completed all follow-up examinations through 12 months and this data will be submitted as part of a Pre-Market Approval Application (PMA) to the Food and Drug Administration (FDA) as the basis for market approval. Patients will continue to be followed through the 18 and 24 month follow-up exams in order to provide long term safety data.

7.8.2 PATIENT TERMINATION

Patients may be terminated from the study at the discretion of the Investigator only if continuation of the treatment regimen would jeopardize the patients' health and/or welfare. Terminated patients will be considered to have completed the study and should not be replaced. However, every effort will be made to follow terminated patients for safety reasons using the appropriate case report forms until the planned end of the study period. NOTIFICATION OF A PATIENT TERMINATION WILL BE MADE IMMEDIATELY TO THE SPONSOR OR ITS DESIGNEE.

7.8.3 PATIENT EXIT

A patient exit form must be completed for all patients who either complete, discontinue, are considered lost to follow-up, or are terminated from the study. Before a patient is considered "lost to follow-up", there should be three documented attempts to reach patients. At least one of these attempts must be in writing by certified / return receipt mail, a copy of which should be included in the patient's medical / clinic chart.

8.0 STATISTICAL METHODS

8.1 SAMPLE SIZE

The sample size for this study is calculated based on the following criteria:

- The significance level is 0.05.
- The primary effectiveness endpoint is the proportion of eyes with an improvement of 2 lines or more in either distance or near BCVA at 12 months postoperatively, P_t.
- The statistical hypotheses for the primary effectiveness endpoint are H_0: $P_t \leq 0.5$ (50%) versus H_a: $P_t > 0.5$.
- The statistical power is 80% at the expected rate of 0.6 (60%.) The expectation of 60% of the eyes achieving improvement is based on results in the feasibility clinical study in which ten of thirteen eyes that reached 12 months having an improvement of 2 lines or greater in either the distance or near BCVA from baseline.
- Binomial distribution is used to calculate the sample size for the effectiveness endpoint.
- The primary safety endpoint is the percentage loss in the endothelial cell counts from baseline at 12 months postoperatively.

Based on a review of the published literature, a mean endothelial cell loss of 10-17% within one year after surgery was observed for large incision surgeries. Therefore, the statistical objective is to prove that the mean percentage of cell loss is no more than 17% and the corresponding statistical hypotheses for the primary safety endpoint H_0: $\mu_t \geq 0.17$ (17%) versus H_a: $\mu_t < 0.17$, where μ_t is the mean percentage loss from baseline at 12 months postoperatively

- The statistical power is 80% at the expected mean loss of 0.135 (13.5%) which is the middle point of the literature's range of 10% to 17%.
- The standard deviation of percentage loss in the endothelial cell counts is assumed to be 0.175 (17.5%), which is estimated based on the feasibility clinical study.
- Normal distribution is used to calculate the sample size for the safety endpoint.

The sample size for the primary effectiveness endpoint is 158 implanted eyes. If 90 or more eyes have an improvement of 2 lines or greater in either distance or near BCVA at 12 months postoperative, the null hypothesis (H_0) will be rejected. Due to the advanced age of the study population, and potential problems with compliance with the visit schedule for patients who may not be independent due to low vision, a dropout rate of 20% is considered. Then the sample size for the primary effectiveness endpoint is 198 eyes.

The sample size for the primary safety endpoint is 156 implanted eyes. If a dropout rate of 20% is considered, the sample size for the primary effectiveness endpoint is 195 eyes.

Therefore, the sample size for this study is at least 198 eyes to fulfill the sample size required for the primary effectiveness endpoint. With this sample size, there is a 95% confidence level to observe at least one adverse event at a rate of 1.5%.

8.2 STATISTICAL ANALYSIS

8.2.1 PRIMARY EFFECTIVENESS ENDPOINT

The primary effectiveness endpoint, the proportion of eyes with at least a 2-line improvement in either distance or near BSCVA at 12 months, will be analyzed with an exact binomial test with a binomial parameter of 0.5. If 158 eyes complete the 12 month postoperative visit, 90 or more successful eyes will result in rejecting the null hypothesis.

8.2.2 PRIMARY SAFETY ENDPOINT

The primary safety endpoint, percentage loss in the endothelial cell counts, will be calculated for each eye. The Student t test will be used for testing the mean percentage cell loss. If 156 implanted eyes complete the 12-month postoperative examination and the standard deviation of the percentage of cell loss is 17.5%, there is a statistical power of at least 80% to prove that the mean percentage cell loss is at most 17%.

8.2.3 OTHER CLINICAL PARAMETERS

The percentages and the corresponding binomial 95% upper confidence limits will be calculated for the percentage of eyes experiencing a loss of more than 2 lines of near (or distance) BCVA without a corresponding improvement (gain of 2 lines or more) in distance (or near) BCVA. The expected rate of this safety event is 10%.

For continuous or ordinal measures such as age or IOP, the number of observations, mean, standard deviation, median, minimum, and maximum values will be presented. If necessary, the 95% confidence interval for the mean value will be provided. If it is appropriate, Analysis of Variance or rank-based methods will be used for comparing the difference among the Investigator sites. For categorical variables such as slit lamp findings or adverse event, the proportion with the characteristic will be presented. If it is necessary, the corresponding exact 95% confidence limits will be provided. If it is appropriate, Fisher's exact test or χ^2 test will be used for comparing the difference among the Investigator sites.

Throughout the analysis, all tests (except for the primary effectiveness and safety endpoints) will be two-sided and any p-values less than 0.05 will be considered statistically significant.

8.2.4 INTERIM CLINICAL REPORTS

Four planned interim analyses will be performed as follow.

- 3-month follow-up on the first 25 subjects
- 3-month follow-up on the first 50 subjects
- 3-month follow-up on the first 100 subjects
- 3-month follow-up on the first 150 subjects.

These interim analyses are for safety and administrative purposes. No statistical adjustment on the p-value will be made.

A Pre-Market Approval (PMA) application will be submitted when all study patients have completed 12 months of follow-up. The 18 and 24 month follow-up data are intended to provide additional long term safety information following the filing of a PMA.

9.0 ADVERSE EXPERIENCES REPORTING / DEVICE MALFUNCTIONS

9.1 ADVERSE EXPERIENCES

Throughout the course of the proposed study, all efforts will be made to remain alert to possible adverse experiences or untoward findings. If adverse experiences occur, the first concern will be the safety and welfare of the patient. Appropriate medical intervention will be made. Any adverse experiences or complications observed by the Investigator or reported by the patients, whether or not ascribed to the IMT, will be recorded in the appropriate section of the patient's Case Report Form.

ANY SERIOUS ADVERSE EXPERIENCES AND UNANTICIPATED, SEVERE, SIGHT-THREATENING ADVERSE REACTIONS, WHETHER OR NOT ASCRIBED TO THE IMT, WILL BE COMMUNICATED PROMPTLY, BY TELEPHONE, TO THE SPONSOR AND TO THE IRB. THESE REPORTS MUST BE CONFIRMED IN WRITING WITHIN FIVE DAYS OF THE OCCURRENCE. Any patients who are terminated from the study due to adverse experiences will be followed until their medical outcome is determined, and written reports will be provided to VisionCare Ophthalmic Technologies by the investigator.

Below is a list of potential or anticipated Adverse Events based on prior IMT clinical trials or known to be occasionally associated with similar types of anterior segment surgery. This list should not be considered comprehensive, but rather identifies events which can be reasonably anticipated.

➢ Acute corneal decompensation	➢ Anterior chamber cells
➢ Anterior segment neovascularizion	➢ Anterior synechiae
➢ Choroidal detachment	➢ Closure of a peripheral iridotomy (with or without pigment)
➢ Corneal edema	➢ Corneal transplant
➢ Cortical remnants	➢ Cyclitic membrane
➢ Cystoid macular edema	➢ Distorted pupil
➢ Endophthalmitis	➢ Epithelial heaping
➢ Fibrin in the anterior chamber	➢ Flat anterior chamber
➢ Hyphema	➢ Hypopyon
➢ IMT dislocation	➢ Increased IOP requiring treatment
➢ Inflammatory deposits on IMT	➢ Intraocular infection
➢ Intraocular inflammation	➢ Iris atrophy
➢ Iris transillumination defects	➢ Iritis
➢ Optic atrophy	➢ Pigment deposits on IMT
➢ Posterior synechiae	➢ Pupillary block
➢ Removal of IMT	➢ Repeat iridectomy
➢ Repositioning of IMT	➢ Retinal detachment
➢ Retinal vascular occlusion	➢ Secondary glaucoma

➢ Secondary surgical intervention	➢ Uveitis/Vitritis
➢ Vitrectomy/vitreous aspiration	➢ Vitreous capture space incision
➢ Vitreous in anterior chamber	➢ Wound leak

9.2 DEVICE MALFUNCTIONS

A Device Malfunction is defined as a failure of the IMT to meet its performance specifications or otherwise perform as intended. Performance specifications include all claims made in this protocol or the product associated labeling included with the device. Examples of malfunctions could include:

- Missing product components;
- Missing or illegible product associated labeling;
- IMTs which appear malformed or disfigured;
- Packaging seals compromised;
- Broken haptic loops or ones which break during implantation; and
- Scratches to the IMT lens surfaces.

All device malfunctions will be recorded in the appropriate field on the patient Case Report Forms.

10.0 MONITORING

Sponsor personnel or their designee will monitor all clinical studies in a manner consistent with applicable health authority regulations and the clinical research standards adopted by the Sponsor. Study monitoring will involve the following elements:

A. Sponsor personnel or designee may meet with Investigators prior to the initiation of the study in order to review the adequacy of the patient population, facilities, and equipment with respect to the needs of the study, and to familiarize the Investigator with the study protocol.

B. Sponsor personnel or designee may meet with the Investigator(s) at the time study patients begin to be enrolled in order to ensure that patients are being properly selected and that study data are being correctly recorded.

C. Sponsor personnel or designee may visit the clinical site at any time during the study to review and/or collect the Case Report Forms.

D. Interim monitoring visits and telephone consultation will occur as necessary during the course of the study to ensure the proper progress and documentation of the study findings.

11.0 REFERENCES

1. Oneill C, et al: Age-related macular degeneration: cost-of-illness issues. Drugs Aging 18:233-41; 2001
2. Allikmets et al: Mutation of the Stargaardt disease gene (ABCR) in age-related macular degeneration. Science 277: 1805-1807, 1997
3. Brody BL, et al: Depression, visual acuity, comorbidity, and disability associated with age-related macular degeneration. Ophthalmology 108:1893-900; 2001
4. Stelmack J. Quality of life of low-vision patients and outcomes of low-vision rehabilitation. Optom Vis Sci 78:335-42; 2001
5. Scilley K, Jackson GR, Cideciyan AV, Maguire MG, Jacobson SG, Owsley C. Early age-related maculopathy and self-reported visual difficulty in daily life. Ophthalmology 109:1235-42; 2002
6. Mangione CM, Gutierrez PR, Lowe G, Orav EJ, Seddon JM. Influence of age-related maculopathy on visual functioning and health-related quality of life. Am J Ophthalmol. 128:45-53; 1999
7. Mangione CM, Orav EJ, Lawrence MG, Phillips RS, Seddon JM, Goldman L. Prediction of visual function after cataract surgery. A prospectively validated model. Arch Ophthalmol 113:1305-11; 1995
8. Mangione CM, Phillips RS, Seddon JM, Lawrence MG, Cook EF, Dailey R, Goldman L. Development of the 'Activities of Daily Vision Scale'. A measure of visual functional status. Med Care. 30:1111-26; 1992

APPENDIX 1 SUBJECT CONSENT FORM

THE IMPLANTABLE MINIATURE TELESCOPE (IMT) IN PATIENTS WITH CENTRAL VISION IMPAIRMENT ASSOCIATED WITH AGE-RELATED MACULAR DEGENERATION OR STARGARDT'S MACULAR DISTROPHY

PROTOCOL IMT-002

---

1. PARTICIPANT'S NAME: _____

2. PURPOSE OF PROJECT:

You have been invited to participate in a research study sponsored by VisionCare Ophthalmic Technologies, Inc. (the study Sponsor) and

Dr._____ ,

the study Investigator. The purpose of this study is to evaluate the safety and effectiveness of the Sponsor's Implantable Miniature Telescope (IMT™) for implantation in patients with age-related macular degeneration (AMD) or Stargardt's macular dystrophy, diseases that decrease vision as a result of scarring. You are a candidate for this study because you have experienced loss of vision as a result of these diseases, and you have a cataract.

The IMT is a visual aid for patients with low vision. It functions in a fashion similar to an external telescope, but is implanted inside the eye, following removal of the cataract. Once implanted inside the eye, the IMT magnifies images to improve vision. A small number of patients (14 patients) have received an IMT in a Phase 1 clinical trial conducted under a Food and Drug Administration (FDA) approved protocol. In this study, the majority of the patients experienced an improvement of 2 or more lines of visual acuity, and no one had a significant loss of vision as a result of implantation of the IMT. Some patients had an improvement in near vision, and other patients experienced an improvement in distance vision. Several adverse experiences were reported during this study, including inflammation that was successfully treated with steroids. All but one of the adverse events resolved completely, and none of them caused a loss of vision. Based on these results, FDA has approved implantation of an additional 200 patients in the clinical study you are being invited to participate in.

3. DESCRIPTION OF RESEARCH:

The study you are being asked to participate in is a 2-year study, although you may be asked to return for an examination at 36 months or 3 years after your surgery.

The first step in this study is to determine whether you are eligible for enrollment in the trial. This will be accomplished by performing standard ophthalmic testing. Your vision will be evaluated, intraocular pressure will be measured, and you will be asked to try an external telescope to see if this improves your vision, since it works in the same way as the IMT. You will then be given one or two different external telescopes, and you will be trained on the use of these telescopes for evaluation in your home for a minimum of three days.

After trying the external telescopes at home, you will return for another eye exam. At this examination, you will be asked which, if any, of the external telescopes improved your vision. If your vision was not improved by using an external telescope, it means you are not a candidate for the IMT and you will not continue in the study. However, if your vision improved with the external telescope, you will continue in the study, and additional testing will be performed. This testing will include fluorescein angiography. This involves injecting a dye into a vein in your arm; the dye then circulates through the bloodstream and to the retina, or the back of your eye, which has many blood vessels. The presence of the dye in the blood vessels of the retina allows your ophthalmologist to better examine your retina and determine whether you are eligible for this study.

If you are determined to be eligible, you will be scheduled for surgery to implant the IMT. The procedure used to implant the IMT inside the eye is similar to standard cataract surgery. Your cataract will be removed using standard methods used by all cataract surgeons, and the IMT will be placed in the eye, where the natural crystalline lens was before removal. After the surgery to implant your IMT, you will be provided with several types of topical ophthalmic medications for use when you return to your home. The schedule for using these medications will be explained to you before you go home.

You will need to return for examinations the first day after surgery, 1 week after surgery, and then 1, 3, 6, 9, 12, 18 and 24 months after surgery. You may also be asked to return for a 36 month or three year follow-up. At the follow-up examinations, much of the same testing that was performed before your surgery is repeated in order to evaluate changes in your vision. You will also be required to return for additional visits at weeks 1, 2, 4, 6, 10 and 12 after surgery for vision training with a low vision specialist. At these vision training sessions, you will perform exercises that will help you become accustomed to the IMT.

4. RISKS

You should recognize that any surgical procedure presents potential risks. As a result of the surgery to place the IMT, it is possible that your vision may not improve. In some cases, complications may occur during or after implantation. These complications include bleeding in the eye, loss of transparency of the front of your eye (the cornea), infection inside the eye, detachment of the retina (the sensory part of the back of the eye), elevated intraocular pressure, and loss of vision. Additionally, as a result of having the IMT in your eye, you may experience difficulties seeing simultaneously with both eyes, double vision, and dizziness.

As with any type of surgery, there is a possibility of other complications due to anesthesia, drug reactions, or other factors. Since it is not possible to identify every possible complication that may occur as a result of the IMT procedure, you should understand that this list of risks may be incomplete and that there may be risks that are currently unknown.

The materials which make up the IMT are used in other types of implantable medical devices and are generally believed to be acceptable for use in eye related implants, however, the IMT does contains a small amount of metal which could interfere with the safe use of a diagnostic imaging procedure called Magnetic Resonance Imaging or MRI. If you choose to participate in this study and are implanted with the IMT you must be certain to tell your other healthcare professionals and doctors that you were enrolled in a clinical trial involving an eye implant which contains metal. Your other healthcare professionals can contact the study Investigator for further information about the IMT which may effect your care.

5. POTENTIAL BENEFITS

The potential benefits from participating in this research study include improvement in your vision without the use of an external telescope, and a wider field of vision than would be achieved with an external telescope.

6. ALTERNATIVE TREATMENTS

Alternative treatments may include telescopic spectacles or other low-vision aids.

7. CONFIDENTIALITY AND PATIENT AUTHORIZATION

You should understand that your medical records pertaining to participation in this study will be made available for review by your doctor to the Sponsor of the study and to governmental agencies such as the U.S. Food and Drug Administration(FDA). You should also understand that the information in these records will be kept confidential, but, that on rare occasions, disclosure to third parties may be required by law. By signing this form, you authorize access to your study related medical records until such time that the marketing application for this technology is approved by FDA.

You agree that results of your surgery and photographs of your eyes made as part of the study may be published for scientific purposes provided your identity is not revealed. Results of this study may be presented at scientific meetings and published in journals, however, no names will be used in any data summaries or publications and all medical data will be protected.

8. COMPENSATION FOR INJURY

You will not be compensated for participation in this study.

You will not receive a bill or be asked to pay for the cost of the study tests or the procedure. The Sponsor will provide the IMT and will cover the costs of testing performed specifically for the study. If a research-related illness or injury occurs at any time during the study, you will receive medical care at _____ Hospital under the supervision of the study Investigator. Any costs for the treatment of research related adverse events not covered by insurance will be paid for or reimbursed by the Sponsor. You will not be

compensated monetarily by the study Sponsor, the hospital or other institution, or the study Investigator for lost wages, disability, or discomfort resulting from this type of illness or injury. You should understand that treatment, payment, or enrollment in a health plan or eligibility for benefits is not contingent upon signing this form.

9. VOLUNTARY PARTICIPATION

You should understand that your participation in this study is completely voluntary and that you may withdraw from the study at any time without prejudice to your future medical care. Should you decide to withdraw from the study for any reason, you should contact the Investigator immediately. You may be discontinued from the study at any time if the Investigator considers it to be in your best medical interest. Should your participation in the study be terminated, regardless of the reason, you will not suffer any penalties or loss of benefits to which you are otherwise entitled.

You will be informed of any significant information regarding new findings that may develop during the course of the research study that may relate to your willingness to continue participating as a subject in the study.

10. CONTACT PERSON

If, at any time, you have questions regarding your participation in this study, you can call Dr. _____, your study Investigator, at:
(_____) _____-_____ .

11. CONSENT

I have been given an opportunity to ask any questions concerning the research, and my participation, and the study Investigator has answered my questions. By signing this consent form I understand that I have not waived any of my legal rights.

I understand that I will receive a copy of this consent and authorization form, which will show all signatures and dates.

I hereby willingly give my consent to participate in the above-described clinical study.

Patient Signature _____ Date: _____

Printed Name of Patient _____

Witness Signature_____ Date: _____

I have discussed this research study with the patient using language that is understandable and appropriate. I believe that I have fully informed this patient of the nature of this study, and its possible benefits and risks, and I believe the patient understood this explanation.

Investigator Signature _____ Date: _____

APPENDIX 2 STUDY EXAMINATIONS : SCHEDULE & METHODS

APPENDIX 2
CONTENTS

APPENDIX 2.1 EXAMINATION SCHEDULE & CLINICAL PARAMETERS 42
APPENDIX 2.2 REFRACTION AND BCVA TESTING PROTOCOL 44
APPENDIX 2.3 INTRAOCULAR PRESSURE MEASUREMENT 54
APPENDIX 2.4 SPECULAR MICROSCOPY 58
APPENDIX 2.5 VISION TRAINING 60
APPENDIX 2.6 ACTIVITIES OF DAILY LIFE 67

APPENDIX 2.1

EXAMINATION SCHEDULE AND CLINICAL PARAMETERS

TABLE 8. SCHEDULE OF EXAMS AND CLINICAL PARAMETERS

EXAM / TEST	VISIT (SEE NOTE BELOW CONCERNING 18 & 24 MONTH FOLLOW-UP)						
	PRE-OPERATIVE	POSTOPERATIVE					
		1 and 7 days	1 month	3 month	6 month	9 month	12 month
DISTANCE BEST CORRECTED VISUAL ACUITY	✓	✓*	✓	✓	✓	✓	✓
NEAR BEST SPECTACLE CORRECTED VISUAL ACUITY	✓		✓	✓	✓	✓	✓
MANIFEST REFRACTION	✓	✓†	✓	✓	✓	✓	✓
IOP	✓	✓	✓	✓	✓	✓	✓
SLIT LAMP EXAM	✓	✓	✓	✓	✓	✓	✓
FLUORESCEIN ANGIOGRAPHY	✓						
DILATED FUNDUS EXAMINATION AND PHOTOGRAPHY	✓						
SPECULAR MICROSCOPY	✓			✓	✓	✓	✓
PACHYMETRY	✓			✓	✓	✓	✓
A-SCAN	✓						
ADL & VFQ-25 QUESTIONNAIRE	✓			✓	✓	✓	✓
VISION TRAINING		✓	2, 4, & 6 weeks	10 & 12 weeks			
ADVERSE EVENTS	✓	✓	✓	✓	✓	✓	✓

*†Pinhole acuity will be measured on Day 1 as a safety assessment. Day 7 visual acuity testing should be by manifest refraction.

TABLE 8 NOTES

NOTE: All scheduled exams and clinical measurements noted for Month 12 are to be repeated at Month 18 and 24 except for the ADL & VFQ-25 Questionnaire.

The visit windows defined in Section 7.5 above allow for the possibility that two visits could be scheduled within one week of each other. This should NOT occur. Follow-up visits from 1 month through 24 months should not occur less than six weeks after the previous visit.

Twelve month data will be submitted as part of a Pre-Market Approval Application (PMA or PMAA) to the United States Food and Drug Administration (FDA) as the basis for market approval. Follow-up examinations at 18 and 24 months are intended to provide long term safety information following the filing of a PMA with FDA.

APPENDIX 2.2

REFRACTION AND BCVA TESTING PROTOCOL

INTRODUCTION & SCOPE

Each patient must successfully complete these visual acuity/refraction procedures in the preoperative evaluation prior to enrollment in the study. Patients must have a distance BCVA between 20/80 and 20/630, and adequate peripheral vision in one eye in order to be considered as candidates for implantation of the IMT. Any patient who is unable to complete these procedures should not be enrolled in the study, regardless of whether the patient meets all other inclusion/exclusion criteria.

Visual acuity will be measured using Early Treatment Diabetic Retinopathy Study (ETDRS) charts. A set of two of these charts (Lighthouse Chart C-110 and C-105 respectively, which have different letter sequences or Precision Vision Chart R (Catalog #2110), Chart 1 (Catalog #2111) and Chart 2 (Catalog #2112) and a retro-illuminated box providing standardized chart illumination[2] will be used to determine visual acuity.

Distance visual acuity testing will be performed at a distance of 2 meters (or at 1 meter for patients who are unable to read 20 letters of the first four lines of the chart at 2 meters).

REFRACTION AND BCVA TESTING PROTOCOL

FACILITIES & MATERIALS

VISUAL ACUITY CHARTS

Charts 1 and 2 are used for testing visual acuity. Chart R is used for refraction. The ETDRS charts consist of 14 lines of 5 high-contrast Sloan letters of equal difficulty and geometric progression of letter size with results in an arithmetic progression of the logarithm of minimum angle of resolution from line to line. Charts 1, 2 and R have different letter sequences. Patients should be prevented from seeing Charts 1 and 2 until refraction has been completed and the visual acuity test begins.

VISUAL ACUITY BOX

The dimensions of the light box are 24-3/4 inches (62.9 cm) by 25-3/4 inches (65.4 cm) by 7 inches (17.8 cm). The light box should be mounted on the wall or on a cylindrical stand manufactured by the Lighthouse Low Vision Services (L-225). The stand is mounted on a five-pronged wheelbase, with each prong about 14 inches (35.6 cm) long. Two of the five wheels are lockable. When the box is mounted on the stand, its height can be varied. The light box should be mounted at a height such that the top of the third row of letters (0.8 log MAR) is 49 ± 2 inches (124.5 cm ± 5 cm) from the floor.

[2] manufactured by Lighthouse Low Vision Products (L-220)

RETRO ILLUMINATED BOX

The room lights should be turned off during the visual acuity test. The box itself provides sufficient illumination for the examiner to record the results. Additional light can have an adverse effect. With the box light off, not more than 15 foot candles (161.4 candela/m^2) of light should fall on the center of the chart. The luminance of the EDTRS VA chart in the plane of the entrance pupil of the eye to be tested should be within 10% of 160 candelas per square meter (cd/m^2 or nits). A photometer should be used for primary calibration. A secondary measuring device, a simple light meter, is calibrated to match the primary determination, and is then used for day-to-day calibration of the VA chart. This meter is placed against the surface of the transilluminated EDTRS chart at a predetermined and constant location. The calibration value is marked on the meter (e.g., an arrow, line, etc.) Luminous emittance of the light box containing the EDTRS chart is then adjusted to this predetermined level. (This secondary reference standard technique is similar to that used on the Goldmann Haag-Streit perimeter.)

The visual acuity light box is equipped with two 20-watt fluorescent tubes and ballast. The Sponsor recommends these lights be changed out for new bulbs at the start of the IMT-002 Study and at least yearly thereafter or in the event of a bulb failure. At the beginning of each examination, proper functioning of the two fluorescent tubes should be verified.

ROOM FOR VISION TESTING

The room for visual acuity testing must have space for a 2 meter (78.7 inches) lane, the visual acuity box, the stand, and the participant. The lane represents a distance of exactly 2 meters between the patient's eyes and the visual acuity chart. In addition to the 2 meter lane, 13 inches (33 cm) must be allowed for two of the stand's castors to touch the rear wall (or a line marked on the floor when there is no wall) plus space for the patient to sit.

Low level, ambient, indirect room illumination should be at a level of 10-12 cd/m^2 or less as measured with the photometer at the patient's eye. Not more than 15 foot-candles of light should fall on the center of the chart. No specular reflection from the chart surface directed towards the patient's eyes is permitted. This is determined with transillumination of the chart turned off and ambient light on.

MARKING THE 1 METER (39.7 INCHES) AND 2 METER (78.9 INCHES) DISTANCES

Floor marks cannot be used reliably to mark either the 1 or 2 meter distances. The horizontal distance between the patient's eye and the chart must be measured individually for each examination. The distance is best measured with one and two meter sticks or a measured non-elastic string from the eye of the patient, who is comfortably seated in a chair with his or her back firmly placed against the chair's back, to the center of the second letter (for left eye) or fourth letter (for right eye) of the third line of the chart.

PROCEDURES

All measurements should be obtained by a physician, optometrist or trained technician supervised directly by the physician or optometrist, before the patient's pupils have been dilated.

PUPIL DIAMETER

If required, the pupil diameter must be measured and recorded using a near vision card with a pupil calibration scale. The patient must view an object having the standard luminance condition (about 160 cd/m^2). It is important that the patient be directed to focus on a distant object during the pupil diameter measurement procedure. The central large letter on the visual acuity test chart is acceptable. Tangential illumination may be introduced to provide sufficient light to compare the pupil of a patient with a dark iris with the calibration scale. The pupil diameter is measured and both uncorrected and best-corrected visual acuity are measured.

REFRACTION

The technique described in the following sections is required for all patients. The right eye is refracted first and then the left eye. Both eye's refraction applies for the preoperative and postoperative examinations.

DETERMINATION OF BEGINNING APPROXIMATE REFRACTION

A period of at least ten minutes must precede visual testing during which the eyes must not be exposed to light brighter than ordinary room illumination, except for retinoscopy.

If the patient wears contact lenses and also has glasses, he or she should be told not to wear the contact lenses on the day of the examination. If the patient appears for the examination wearing contact lenses, the contact lenses should be removed and refraction and visual acuity testing should not begin for at least 30 minutes.

At the pre-operative visit, in order to determine the lens corrections which will be used as the beginning approximate refractions for determining best-corrected visual acuity, the following steps should be taken:

1. If the patient's visual acuity is 20/200 or better with his/her present distance glasses, the glasses are measured with a lensometer and these measurements are used as the beginning approximate refraction.

2. If the patient's uncorrected visual acuity is less than 20/200 in either eye with his/her present distance glasses (or without correction, if the participant does not have glasses), a trial with lenses to bring visual acuity to 20/200 or better should be conducted.

3. If the patient's uncorrected visual acuity is 20/200 or better and he/she does not have glasses for distance vision, the beginning approximate refraction is no lens correction (plano).

Retinoscopy and the autorefractometer will not be able to determine the post-operative refraction of the implanted eye.

Refraction should be attempted at 1 meter. It will not be possible to perform a subjective refraction at 10 to 20 feet (3 to 6 meters) because this patient population's visual acuity is too poor. Add +1.00 and -1.00 spheres and change the spherical power by whole diopter increments of the appropriate sign until the participant perceives no improvement in vision. If the subjective refraction can be performed successfully at 1 meter, a +0.50 sphere should be subtracted from the 1 meter refraction to make the correction appropriate for the 2 meter distance. It is the latter correction that should be entered in the appropriate space for subjective refraction on the Visual Acuity Form.

At follow-up evaluations, the results of the subjective refraction from the previous visit may be used as the beginning approximate refractions.

MEASUREMENT OF SUBJECTIVE REFRACTION

The trial frame is placed and adjusted on the patient's face so that the lens cells are parallel to the anterior place of the orbits and centered in front of the pupils. It is permissible to use a Phoroptor for subjective refraction. The left eye (the IMT implanted eye after implantation) is occluded, and the beginning approximate refraction, as determined above, is placed in the right eye lens cell with the cylindrical correction anterior. If a phoropter or a distance other than 2 meters is used for subjective refraction, the lenses from this refraction must be placed in a trial frame and the final sphere must be rechecked at 2 meters according to the instructions described in ***REFINING FINAL SPHERICAL POWER***, before visual acuity testing is performed.

DETERMINATION OF SPHERICAL REFRACTION

The visual acuity of the right eye is assessed and noted. A +0.50 sphere is then held in front of the right eye and the participant is asked if the vision is better, worse, or no different while he or she is looking at the smallest line read well. If the patient responds that it is not improved, he/she is asked if the vision is worse.

If vision is better or no different, the sphere in the trial frame is replaced with one that is one-half diopter more plus. The +0.50 sphere is held in front of the right eye again and the participant is again asked the same question.

This process of increasing the plus sphere in the trial frame is repeated until the patient says that the +0.50 sphere held in front of the trial frame makes the vision worse. When the patient responds that the vision is worse, the lens should be left in place for 10 to 15 seconds. If the vision clears during this period the +0.50 sphere may be added again. Whenever the patient says that the vision is worse and remains worse, the +0.50 sphere is removed from in front of the trial frame. By this process, the highest-plus or least-minus sphere that is tolerated without blurring the patient's vision is determined. After determining this highest plus or least-minus spheres, the patient is asked to read the smallest line possible.

Next, a -0.50 sphere is held in front of the trial frame and the patient is asked if the vision is better, worse, or no different. If vision is improved, the patient is requested to read the chart and if at least one more letter is read, the sphere in the trial frame is replaced by a sphere that is 0.25 diopter less plus. Minus spherical power is added in -0.25 diopter increments in the above fashion until the patient shows no further improvement in vision. If vision is not improved, the +0.50 sphere is tried again to see if the patient will accept more plus.

Record results on case report form and repeat testing for left eye.

DETERMINATION OF CYLINDRICAL REFRACTION

This procedure includes:

Cylinder axis determination
Cylinder power determination
Correction for Astigmatism
Refining Final Spherical Power

NOTE: If a phoropter or a distance other than 2 meters is used for subjective refraction, the lenses from this refraction must be placed in a trial frame and the final sphere must be rechecked at 2 meters according to the instructions described above (Refining Final Spherical Power).

CYLINDER AXIS DETERMINATION

If the beginning approximate refraction contains a cylinder correction, changes in cylindrical axis are tested by adding a 0.25, 0.37, or 0.50 diopter cross-cylinder, first with the positive axis 45 degrees to one side of the cylinder axis, and then with the positive axis 45 degrees to the opposite side of the cylinder axis. Since neither position may produce a clear image, the participant is encouraged to select the position producing "less blur" while fixing on a single round letter on the line above the lowest line on the chart he or she is able to read when the cross-cylinder is not held up before the trial frame.
If the participant cannot choose between the two positions of the cross-cylinder at the beginning of this test, the axis of the cylinder is

moved 5 to 15 degrees, first in one direction and then in the other, with the cross-cylinder being checked in each position to confirm that the original axis was indeed correct.

If the participant prefers one position of the cross-cylinder to the other and the cylinder in the trial frame is plus, the axis of the cylinder is moved 5 to 15 degrees toward the positive axis of the cross-cylinder when it is in the position found to be less blurry by the participant. (When the power of the cylinder is low or the participant's discrimination is poor, larger shifts will produce more clear-cut answers.) The cross-cylinder is tried again with the positive axis 45 degrees first to one side and then to the opposite side of the new cylinder axis to determine which position is producing less blur. If the participant finds one position less blurry, the axis of the plus cylinder is moved toward the positive axis of the cross-cylinder. Testing for change of axis is repeated until the participant finds neither position definitely better than the other.

CYLINDER POWER DETERMINATION

Change in cylinder power is tested by adding the cross-cylinder, first with the positive axis and then with the negative axis coincident with the cylinder axis. For this test, the participant is requested to focus attention on a round letter on the lowest line on the chart he or she is able to read. If the participant prefers the positive axis coincident with the cylinder axis, the power of the correcting plus cylinder is increased by an additional +0.25 diopter.

If the participant prefers the negative axis coincident with the cylinder axis, the total power of the correcting plus cylinder is reduced by 0.25 diopter. The process is repeated until the participant finds neither position definitely better than the other. As plus cylinder is added, the examiner should recognize that the spherical equivalent of the refraction is being changed. More minus spheres may be needed as plus cylinders are added. When using plus cylinders for every 0.50 diopter of cylinder power added, the sphere should be changed by -0.25 diopter. If, at any time, the preference with the cross-cylinder indicates that cylinder power should be removed entirely, the 0.25 cylinder should be rotated 90 degrees from its original position. The axis should be refined and the power should be tested again.

CORRECTION FOR ASTIGMATISM

If, the beginning refraction is a "pure" sphere, the presence of astigmatism is tested by arbitrarily placing a +0.25 cylinder at 180 degrees in the trial frame, after having determined the highest-plus or least-minus sphere producing minimal blurring of vision, as described above. The refraction is then continued by using the cross-cylinder to test for cylinder axis and then cylinder power using the cross-cylinder technique outlined above. If, at any time, the preference with the cross-cylinder indicates that cylinder power should be removed entirely, the 0.25 cylinder should be rotated 90 degrees from its

original position and the power should be tested again. At this point, if the participant prefers additional power, it should be added. If, on the other hand, the participant prefers to remove the +0.25, it should be removed and the final refraction is then purely spherical. An example of this procedure follows:

Beginning refraction: -2.50 + 0.25 axis 37 degrees. Use of the cross-cylinder to check cylinder axis indicates that the participant prefers the 37-degree axis. If, on using the cross-cylinder to check cylinder power, the participant wants the 0.25 cylinder removed, rotate the cylinder to 127 degrees and test for cylinder power again. If additional power is preferred, add it. If the preference with the cylinder at 127 degrees is to remove the 0.25 cylinder, this should be done and the resulting refraction is -2.50.

Minus cylinders may be used instead of plus cylinders to determine the best correction for the cylinder power and axis. If minus cylinders are used, the above procedure must be revised to reflect the change in sign.

REFINING FINAL SPHERICAL POWER

When neither the power nor the axis of the cylinder can be improved, the power of the sphere is refined by testing with +0.25 sphere and -0.37 sphere and changing the spherical power. If the sphere is changed at this point, the cylinder should be rechecked. This process is repeated until no further significant lens changes are made.

This refraction protocol can be summarized as follows. First, having eliminated any possible accommodation with plus spheres, the spherical equivalent power is placed on the retina. Then the cylinder power and cylinder axis are assessed. This process of checking sphere, cylinder axis, and cylinder power is repeated until there are no changes that result in an increased number of letters being read. Ideally, at the end of the refraction, the sphere is checked and the participant neither tolerates increased plus nor improves with increased minus spheres. Then the axis is checked and no change in axis is indicated. Finally, the cylindrical power is checked and no change in this is indicted. At this point, the refraction is completed. Sometimes this endpoint cannot be reached because there are an unending number of small corrections at each repetition of the process. When it becomes clear that these small changes are not resulting in an increased number of letters read correctly, the examiner can terminate the refraction.

The lens corrections obtained in this way for the right eye are recorded on the Visual Acuity Worksheet as the corrections obtained by subjective refraction for the right eye. The entire process is repeated for the left eye, and these lens corrections are also recorded on the Visual Acuity Worksheet as the corrections obtained by subjective refraction for the left eye.

TESTING BEST CORRECTED VISUAL ACUITY

TESTING DISTANCE

Visual acuity testing is performed at a distance of 2 meters for all patients, including those who could not be refracted at the two-meter distance. Visual acuity is tested at 1 meter only if the number of letters read correctly at 2 meters is less than 20.
The distance from the patient's eyes to the visual acuity chart must be exactly 2 meters. The patient must sit for the 2 meter visual acuity test. His or her back should be firmly touching the back of the chair. The examiner should ensure that the participant is sitting comfortably, that the head does not move forward or backward during the test, and that the participant's eyes remain at the 2 meter distance.

USING THE ETDRS CHART

First, the right eye is tested (non-implanted eye after surgery) and then the left eye (IMT implanted eye after surgery) is tested. All visual acuities will be evaluated with the subject's eyes in the straight-ahead, primary position of gaze. This will help to assure that visual acuity in the non-implanted eye is measured without the use of peripheral vision. The IMT implanted eye will have no peripheral vision, but for reasons of consistency should be conducted in the same manner.

TESTING PRINCIPLES

1. As previously mentioned, room lights should be turned off during visual acuity testing. The retro-illuminated box will provide sufficient light for the examiner to record results of the test.

2. The patient should be told that the chart has letters only and no numbers. If the patient forgets this instruction and reads a number, he or she should be reminded that the chart contains no numbers and the examiner should request a letter in lieu of the number. Examiners should point to the chart and to specific letters on the chart. Examiners should never read any of the letters during the test.

3. Because each letter will be scored, the patient should be asked to read slowly (at a rate not faster than about one letter per second) in order to achieve the best identification of each letter. The examiner should not proceed with the next letter or line of letters until the patient has given a definitive answer for each letter. It may be useful for the examiner to demonstrate the letter-a-second pace by reciting "A, B, C,..". If, at any point, the participant reads too quickly, he or she should be asked to stop and read slowly.

4. Each participant will be encouraged to read the letters on the chart as they become smaller and more difficult to read. Each time a

participant says he/she cannot read a letter, the examiner will encourage him/her to figure letters but not to randomly guess at them. If the participant identifies a letter as one of two or more letters, he/she should be asked to choose one only. The examiner should remind the participant to blink normally during all testing. All visual acuities are to be evaluated with the patient's eyes in the straight-ahead, primary position of gaze. The testing and recording of answers will continue until the patient states that he/she can no longer read or figure out the letters. The examiner may stop the test at this point provided that the patient has previously made some errors that indicate that the best possible acuity level has been reached. Patients are encouraged to make a best possible choice for several reasons: 1) statements that they cannot identify a letter are often unreliable, and 2) bias may be reduced when effort is maximized through guessing. Furthermore, inter-center variability of visual acuity measurement is minimized when uniform instructions for testing are employed.

5. Where a wrong answer is given, have the patient proceed with the next letter, but re-evaluate the "wrong" letter again after completing the line. If patient loses their place, he/she should be asked to go back to the top line, and start again, reading only the first or last letter in the line for those lines which were complete, once the missed line is reached, continue with standard examination. This procedure, called the First Letter Technique is used in all examinations with low vision charts, also during rehabilitation.

SCORING

The examiner records each letter identified correctly by circling the corresponding letters on the Visual Acuity Form. Letters read incorrectly and letters for which no guesses are made are not marked on the form. Each letter read correctly is scored as one point. The score for each line (which is zero if no letters are read correctly) and the total score for each eye is recorded on the Visual Acuity Form after testing is completed.

SCORING FOR 2 METER TESTING

If testing at 1 meter is not required, 15 points are automatically scored for the 1-meter test. The total combined score (i.e., the sum of the 2 meter and the 15 points awarded for the 1 meter test) is recorded on the Visual Acuity Form.

SCORING FOR 1 METER TESTING

Eyes reading less than 20 letters correctly at 2 meters should be tested at 1 meter. Both the 2 and 1 meter totals should be recorded on the Visual Acuity Form. If the trial frame is to be removed when changing the test distance from 2 meters to 1 meter, the testing chart should first be removed from view to prevent the participant from reading the chart with the fellow eye.

Before testing at 1 meter, a +0.50 sphere should be added to the 2-

meter correction already in the trial frame to compensate for the closer testing distance. The participant must sit for the 1-meter test. The avoidance of any head movement forward or backward is particularly important during the 1-meter test.

SCORING LIGHT PERCEPTION (LP) AND NO LIGHT PERCEPTION (NLP)

If visual acuity is so poor that the participant cannot read any of the largest letters at 1 meter (i.e., the number of letters read correctly at 1 meter is zero), light perception should be tested with an indirect ophthalmoscope in a darkened room. The indirect ophthalmoscope light should be in focus at 3 feet (91.5 cm) with the rheostat set at maximum voltage. From a distance of 3 feet (91.5 cm), the beam should be directed in and out of the eye at least four times, and the participant should be asked to respond when he or she sees the light. If the examiner is convinced that the participant perceives the light, vision should be recorded as light perception. Otherwise, vision should be recorded as hand movement or no light perception. **NOTE:** Patients with vision this poor at baseline are NOT qualified for participation in the IMT-002 Study.

NOTE: The above Refraction and BCVA Testing Protocol represents a modified version of one published by Lighthouse. The calibration requirements outlined involving a photometer are encouraged if the device is available, but is NOT required as part of the IMT-002 Study. The Sponsor does encourage the site to periodically confirm the luminance quality with the use of a standard light meter.

APPENDIX 2.3

INTRAOCULAR PRESSURE MEASUREMENT

Measuring Intraocular Pressure

Michael A. Kass, M.D.

Required at all Study Visits

Except Vision Training

Goldmann tonometry as the international gold standard for tonometry is quite accurate and reproducible if proper technique is used. Interobserver variability is in the range of 0 to 3 mm Hg, which is less than the diurnal variation of intraocular pressure. The technique of Goldmann tonometry is as follows:

1. The patient is told in advance not to drink alcoholic beverages for 12 hours or to smoke marijuana for at least 24 hours before tonometry. Food and liquid in usual quantities are permitted although large amounts of fluid (e.g., 500 ml or more) should be avoided for four hours before the test.

2. The patient is told the purpose of the test and is reassured that the measurement is not painful. The patient is instructed to relax, maintain his position, and hold his eyes open widely.

3. One drop of a topic anesthetic, such as 0.5% proparacaine or 0.4% benoxinate, is placed in each eye, and the tip of a moistened fluorescein strip is touched to the tear layer on the inner surface of each lower lid. Alternatively one drop of a combined anesthetic-fluorescein strip is touched to the tear layer on the inner surface of each lower lid. Alternatively one drop of a combined anesthetic-fluorescein solution can be instilled in each eye.

4. The tonometer and prism are set in correct position on the slit lamp.

5. The tension knob is set at 1 g. If the knob is set at 0, the prism head may vibrate when it touches the eye and damage the corneal epithelium. The 1 g position is used before each measurement. As a rule, it is more accurate to measure intraocular pressure by increasing rather than decreasing the force of applanation.

6. The 0 graduation mark of the prism is set at the white line on the prism holder. If the patient has more than 3 diopters of corneal astigmatism, the area of contact between the cornea and the prism is elliptic rather than circular. In this situation the prism should be rotated to 43 degrees from the long axis of the ellipse-that is, the prism graduation corresponding to the least curved meridian of the cornea should be set at the red mark on the prism holder. An alternative approach is to average the intraocular pressure readings obtained with the axis of the prism horizontal and then vertical.

7. The cobalt filter is used with the slit beam opened maximally. The angle between the illumination and the microscope should be approximately 60°. The room illumination is reduced.

8. The patient is seated in a comfortable position on an adjustable stool or examining chair facing the slit lamp. The heights of the slit lamp, chair and chin rest are adjusted until the patient is comfortable and in the correct position for the measurement. The patient's chin is supported by the chin rest and the forehead by the forehead bar. The forehead bar should be well above the patient's eyebrows so the frontalis muscle can be used to open the eyes widely. The patient's collar and tie should be loosened if necessary. The patient should breathe normally during the test to avoid Valsalva's maneuver.

9. The palebral fissure is a little wider if the patient looks up. However, the gaze should be no more than 15° above the horizontal to prevent an elevation of intraocular pressure that is especially marked in the presence of restrictive neuromuscular disease. A fixation light may be placed in front of the fellow eye. The patient should blink his eyes once or twice to spread the fluorescein-stained tear film over the cornea and then should keep his eyes open widely. In some patients it is necessary for the examiner to hold the eyelids open with the thumb and forefinger of one hand. Care must be taken not to place any pressure on the globe because this raises intraocular pressure.

10. The operator sits opposite the patient in position to look through the microscope. The clinician moves the assembly toward the subject. When the black circle near the tip of the prism moves slightly, it indicates contact between the prism and the globe. Alternatively, the assembly is advanced toward the patient until the limbal zone has a bluish hue. The biprism should not touch the lids or lashes because this stimulates blinking and squeezing. Touching the lids also thickens the fluorescein rings, which may cause an overestimation of intraocular pressure.

11. The clinician observes the applanation through the biprism at low power. A monocular view is obtained of the central applanated zone and the surrounding fluorescein-stained tear film. Using the control stick, the observer raises and lowers and centers the assembly until two equal semicircles are seen in the center of the field of view. If the two semicircles are not equal in size, intraocular pressure is overestimated. The clinician turns the tension knob in both directions to assure himself or herself that the instrument is in good position. If the semicircles cannot be made "too small," the instrument is too far forward. If the semicircles cannot be made "too large," the instrument is too far from the eye.

12. The fluorescein rings should be approximately 0.25 to 0.3 mm in thickness that is one-tenth the diameter of the flattened area. If the rings are too narrow, the patient should blink two or three times to replenish the fluorescein; additional fluorescein may be added if necessary. If the fluorescein rings are too wide, the patient should blink two or three times to replenish the fluorescein; additional fluorescein may be added if necessary. If the fluorescein rings are too wide, the patient should dry his eyes lightly with a tissue, and the front surface of the prism should be dried with lint-free material. An excessively wide fluorescein ring is less of a problem than a very narrow ring but can cause the intraocular pressure to be overestimated .

13. The fluorescein rings normally undergo a rhythmic movement in response to the cardiac cycle. The tension knob is rotated until the inner borders of the fluorescein rings touch each other at the midpoint of their pulsations. The intraocular message is the mean of these 2 readings.

14. Intraocular pressure is measured in the right eye twice. If the 2 readings disagree by 1 mm Hg or less the average is the IOP. If the 2 readings disagree by 2 mm Hg or more, a third reading is taken. The IOP is the median of these readings. Intraocular pressure is then measured in the left eye.

15. The reading obtained in grams is multiplied by 10 to give the intraocular pressure in millimeters of mercury. This value is recorded along with the date, time of day, list of ocular medications, and time of last instillation of ocular medication if IOP is measured on different days, an attempt should be made to standardize the time $\pm$ 1 hour.

16. It is possible to transfer bacteria, viruses, and other infectious agents with the tonometer head. This includes such potentially serious infections as epidemic keratoconjunctivitis, hepatitis B, acquired immunodeficiency syndrome, and Creutzfield-Jacob disease. To prevent cross-contamination, the biprism should be rinsed and dried immediately after use. Between uses, the prism head should be cleaned with a solution such as chloramine-T diluted bleach, 3% hydrogen peroxide, 70% ethanol, or 70% isopropanol. An alternative approach is to cover the surface of the biprism with a plastic film.

17. The Goldmann tonometer should be calibrated at least once a month. The metal balance bar is attached to the main pivot above the force knob. With the testbar at its 0 position, the prism head should move when the knob is turned to 0 $\pm$ 0.1 g. When the bar is decentered to the 2-position, the prism should move when the knob is advanced to 2 $\pm$ 0.1g. When the bar is decentered to the 6-position, the biprism should move when the knob is advanced to 6 $\pm$ 0.1g. If the Goldmann tonometer is not within 0.1 g. of the correct calibration, the instrument must be repaired.

Although the Goldmann tonometer is reliable and accurate through a wide range of intraocular pressures, errors in measurement can arise from a number of factors, including the following:

1. Inadequate fluorescein staining of the tear film causes an underestimation of intraocular pressure.

2. Elevating the eyes more than 15° above the horizontal causes an overestimation of intraocular pressure. Widening the lid fissure excessively causes an overestimation of intraocular pressure.

3. Repeated tonometry reduces intraocular pressure, causing an underestimation of the true level. This effect is greatest between the first and second readings, but the trend continues through a number of repetitions.

4. A scarred, irregular cornea distorts the fluorescein rings and makes it difficult to estimate intraocular pressure.

5. The thickness of the cornea affects intraocular pressure readings. If the is thick because of edema, intraocular pressure is underestimated. If the cornea is thick because of additional tissue, intraocular pressure is overestimated. The Goldmann tonometer is accurate after epikeratophakia.

6. If the examiner presses on the globe or if the patient squeezes his eyelids, intraocular pressure is overestimated.

7. If corneal astigmatism is greater than 3 diopters, intraocular pressure is underestimated for with the rule astigmatism and overestimated for against the rule astigmatism. The intraocular pressure reading is inaccurate 1 mm Hg for every 3 diopters of astigmatism.

Appendix 2.4

SPECULAR MICROSCOPY

Required at Pre-operative and Months 3, 6, 9, 12, 18 & 24 post IMT implantation.

The main safety concern to be addressed by specular microscopy is the possibility of a chronic loss of endothelial cell density, which, even at a low yearly rate could, over time, lead to corneal edema and decompensation.

To determine endothelial cell density loss, specular microscopy will be performed preoperatively and at the Month 3, 6, 9, 12, 18 and 24 examinations. Losses due to surgical trauma may be determined by evaluating the cell counts at Month 3 (or Month 6) in comparison to the preoperative measurements. To determine losses over time, measurements from the Month 3 (or Month 6) and later time points will be analyzed.

Analyses of specular microscopy data will include the determination of the mean cell density loss over time and a frequency distribution. The mean rate of cell density loss will be calculated via a paired analysis in order to calculate the mean of the differences.

Collection of data

The methods used for the collection and analysis of specular microscopy data are critically important to minimizing the variability associated with these measurements. Common sources of variability in specular microscopy are:

- difficulty in returning to same location on the cornea at each visit;
- poor image quality (less than 100 countable cells);
- technician error; and
- improper reader analysis.

To address differences in location of the image within a given area of the cornea, three acceptable images should be taken at each visit. The mean density from the three images should be used.

Problems due to poor image quality and/or technician error will be avoided by using appropriate equipment and trained, experienced clinical sites equipped with non-contact specular microscopes. Images will be stored on 35 mm slides, half-inch video, or in electronic format such as CD's, floppy disks and/or zip drives. Sites may also produce high quality photographic images which can be electronically scanned and digitized.

Specular cameras that can record digitized images on disk are preferable for ease of data transfer.

Prior to the beginning of the study, each site will be required to take an initial set of images for an evaluation of image quality. Training (or retraining) will be performed as necessary and include the following important points:

An acceptable image has:

- distinct cells;
- at least 100 identifiable (countable) cells as a minimum, 150 cells preferred; and
- cells that can be grouped in a uniform area.

To capture a good image:

- make sure the patient is comfortable;
- instruct the patient to blink;
- instruct patient not to move and to open eyes wide;
- instruct patient to focus straight ahead or on the green light;
- be patient; and
- if necessary, use the manual setting. (Note that the use of the manual setting may require additional training.)

A central reading center will be retained for both obtaining specular micrographs of adequate quality, and for analyzing the specular images. The reading center or technician performing the image analysis will be advised of the following:

- A minimum of 100 cells (ideally 150 cells) in a contiguous area will be counted. The center method for counting cells is recommended.
- The quality of cells in an image is critical. Since the presence of disease can increase variability (e.g., polymegathism/pleomorphism post-contact lens wear, keratoconus), the area with the fewest distortions (not in shadow, washed-out, or blurred) should be used for the image analysis.

SPECULAR MICROSCOPY PROCEDURE

A non-contact specular microscope will be used at each site. The mean density from three images of the same location of the cornea will be made.

ENDOTHELIAL IMAGE PHOTOGRAPHY

1. The location to be photographed is selected by clicking on the mark that indicates the location of the fixation target. An image will be taken of the central cornea.
2. Patients will be asked to place their chin on the left chin rest for photography of the right eye and on the right chin rest for photography of the left eye. Adjust the height of the chin rest so that an image of the patient's eye can be seen on the monitor screen with the pupil in the approximate center of the screen. The patient is asked to stare at the fixation target until an image is photographed.
3. An endothelial image is recorded by clicking on the appropriate indicator button on the instrument. The instrument aligns, focuses and takes the endothelial photograph automatically and the endothelial image will appear on the screen immediately.
4. All endothelial images will be recorded and sent to the specular microscopy reading center for image analysis.

APPENDIX 2.5

VISION TRAINING

REQUIRED AT VISITS

Weeks 1, 2, 4, 6, 10 & 12

THE REHABILITATION CONCEPT

The goal for rehabilitation of low vision patients is to enhance independent living outcomes for individuals who have low vision. Traditional eye care treats the cause of the condition; low vision care addresses the consequences. Our goal is to provide the patient with the skills to adjust to the IMT and to its use in such a way that optimal function is achieved in minimal time.

In the traditional medical model of rehabilitation, the eye care professional is the source of action; the patient complies actively; and the patient's family provides mostly passive support. In this proposed rehabilitation model, the patient becomes the source of action (actively assisted by their families), while the eye care professional does the guiding. This is a significant shift in roles, one that needs to be thoroughly discussed at the pre-operative stage. It may also be necessary for the low vision professional to provide emotional support, due to the in intensive nature of the pre- and post-op relationship.

The role of the family is critical since patients need the help of their relatives or friends for both emotional support and home training. Because patients often forget what they are told at the clinic, it is important to include the family in all explanations. It is the family member or friend who will verify that home training is performed, and assure that the correct environment is provided (such as lighting and contrast of objects), for optimal rehabilitation.

Initially, only distance correction should be prescribed. At six to eight weeks, the near correction should be added and clinical assessment of both near and distance should continue throughout the year.

REHABILITATION BASICS

FIVE FUNDAMENTAL SKILLS

There are five fundamental skills in vision:

LOCALIZING - locating an object of interest into the IMT's field of view. If difficult, the patient should first look at the object with both eyes, then obscure the fellow eye and try again with implanted eye.

FIXATING – performed by the operated eye. This means that the

operated eye fixates on the object, thus enabling object identification.

SCANNING – the natural eye movement performed by the operated eye.

TRACING – following a path between objects of interest. Perform initial training with a few lines of large size letters printed on a long piece of paper. Tell patients to follow the line from one letter to the next. Use the "thumb tracking technique" to locate the next line on the page.

TRACKING - the ability to follow a moving object. Patients first practice tracking on slow moving objects such as a walking person, and then progress to faster moving objects such as cars and buses. Tracing and tracking are expected to be almost natural with the IMT, as it uses natural eye movements.

GRADUAL VISION PRACTICE

Gradual vision practice includes the following steps:

1. Have the seated patient try to recognize large static objects
2. While seated, observe moving targets such as a person walking
3. Walk while looking at stationary objects
4. Walk while looking at moving targets

Practice begins indoors, with training sequences proceeding from simple tasks to complex ones and from static to dynamic. For outdoors activities, start in a quiet, familiar environment with few moving objects. Assess light and glare requirements, if needed use sunglasses.

REHABILITATION PROGRAM

SCHEDULED REHABILITATION VISITS

Rehabilitation is a very individual process, and it is best to meet with patients once every one or two weeks. Usually six to eight sessions will suffice. The basic schedule for the training is as follows:

1. Begin distance task practice one to two weeks after surgery.
2. Intermediate task training begins 2 to 3 weeks post-op.
3. Reading practice begins 3 to 4 weeks after surgery.

DISTANCE ACTIVITIES REHABILITATION

Watching TV is a relatively easy task for IMT implanted patients. Start this training 1 to 2 weeks after surgery, from a distance of 2 to 3 meters. Practice daily, 3 times a day for 5-10 minutes each, increasing to 20 minutes. Use the prescribed glasses with or without

fellow-eye patching. Patients should describe what they see with the operated eye (i.e. details of figures). Encourage them to understand that they're using the operated eye. If the fellow-eye is patched, have them try to use both eyes once they feel comfortable.

Next, proceed to outdoor activities. Useful targets for outdoors distance training are building signs, cars or other large stationary objects. As vision improves, proceed to street signs, bus/house numbers and slow moving objects.

INTERMEDIATE DISTANCE ACTIVITIES REHABILITATION

Intermediate distance activities vary between individuals, so create an activity list based on the patient's own interests. Remember the need for high illumination. Typical intermediate activities include playing cards or board games, painting pictures, arranging flowers or preparing meals. Identify the difficult stages of each task, and practice them repeatedly, until improvement is achieved.

Initially, select familiar activities. In advanced training it is valuable to engage in novel tasks. Novel tasks promote the development of the motor-eye coordination necessary for better skills.

READING REHABILITATION

Reading is one of the most difficult tasks to do with low vision aids. It requires intense effort and concentration from the patient. More than for other tasks, high illumination is critical, and should always be directed over the shoulder to the text. If the patient prefers, reading can be done initially with fellow-eye patching. Encourage use of both eyes as patient progresses.

Start reading practice 3-4 weeks after surgery using adequate near correction. Reading at home is an essential part of rehabilitation. A family member should ensure high illumination and distance adjustment. Training should take place regularly, three times a day. Initially, sessions should be only 5 minutes long but should ultimately be increased to 20 minutes. Time increases should be individualized. A total of one hour of reading per day is sufficient for most patients.

ADEQUATE PRINT SIZE

Read letters sized 1-2 lines larger than near visual acuity threshold.

TEXT CALIBRATION

The standardized text used at the clinic should serve as the “personal calibration text” for home use. Patients start each session at home with this text. They should then try reading another text with the same print size. If this is difficult, they should refer back to the "personal calibration text”. Knowing that this text was read clearly at the clinic, tells the patient if the home reading environment is correct. Potentially discouraging problems caused by low

illumination, inadequate distance or too small print can be significantly reduced through use of the "personal calibration text".

STABLE TEXT POSITIONING Text should be in a constant position. Rest it on a stable surface, rather than holding in the hands. The best way is to use a book-holder.

THUMB TRACKING TECHNIQUE This "trick" is critical for low vision patients. The most difficult task in reading is finding the beginning of the next line. Tell patients to place their thumb at the beginning of the first line, and keep it there while reading. When they reach the end of line, they can then look for their thumb. Since it's possible to find one's thumb even in total darkness, finding it becomes an easy thing to do. This simple trick can make a huge difference for most patients - both in reading rate and in confidence.

NATURAL EYE SCANNING Assure that patients read by moving their eyes along the line as in normal vision. Point out the difference between this mode of reading and the external telescope reading.

"ONE SIZE FITS ALL" PRINCIPLE An important design concept of the IMT is the "one size fits all' principle. Should a patient require larger magnification for reading due to disease progression, simply bring the text closer and add low diopter plus correction.

WRITING REHABILITATION Some patients may want to write. The principles of writing rehabilitation are:

1. Refraction: Use the same correction used for reading.
2. Documentation: All written material should be kept and dated for progress identification.
3. Reading: The patient should read the written material.

WRITING TECHNIQUES

PAPER - Use non-ruled paper.

LETTERS - Use large letters. The patient may either PRINT or use *script* letters.

LINES & LOOPS - If letters are difficult, start by drawing lines and loops simulating handwriting.

TEXT - Start writing easy daily-life tasks: list 5-10 grocery items, write an address on an envelope, etc

(with dates).

READ TEXT - Have the patient read their written material. This will help them determine if the writing is sufficiently legible, and will demonstrate the impact of large letters on reading ability.

PROGRESS - Show the patient the progress made over the weeks. The patient should bring all the lists written to the follow-up and try reading the items. Since all items are dated, progress should be easily recognized.

FORMS & CHECKS - The use of structured forms (such as checks) can be taught if the patient shows interest. A blank check should be placed in front of the patient, who then fills it out. Encourage the patient to use large letters. In the USA, all banks carry large print checks for visually impaired customers (at no additional charge). Checks should be written for small amounts and voided once written. When writing a check the patient should first locate the place on the form to be filled in. This could be accomplished with the fellow eye for patients who can work with the fellow eye uncovered. Once the place on the check is located the pen's tip should be placed there and located using the operated eye. The patient should write the item (date, name or amount) while maintaining the pen's tip in the field of view. Large letters should be written, filling or even exceeding the space provided on the check.

IMT BINOCULAR FUNCTION

Visual function with the IMT is based on the detail vision of the operated eye and the peripheral vision of the fellow eye. Ideally, patients will use the IMT with the fellow eye uncovered. However, if this presents a problem, initial training can proceed with the fellow eye patched or the spectacle lens taped. This promotes use of the IMT. With practice it is often possible to achieve use without the patch.

Remember that if patients report diplopia or anisoconia, it is a good sign that both eyes are being used. In most cases this state is transient, and simply requires temporarily patching, or taping the spectacle lens of one eye:

- Patch the fellow-eye in static vision.
- Patch the operated eye when in motion.

REHABILITATION CHECKLIST

REHABILITATION BASICS

VISUAL SKILLS Localizing, Fixating, Scanning, Tracing and Tracking

GRADUAL VISION PRACTICE

- Recognizing large static objects.
- Observing moving targets.
- Walking while looking at stationary targets.
- Walking while looking at moving targets.

REHABILITATION PROGRAM

1-2 Weeks Post-Op - Distance Vision – TV Watching

- Use Refraction Correction (+/- fellow-eye patching).
- Practice at 2-3 meters. Assure light dimming for contrast enhancement.
- Practice 3 times a day (5 minutes each. gradually increasing to 20 minutes).
- Ask patients to describe sight with operated eye (emphasize it is used).

2-3 Weeks Post-Op - Distance & Intermediate Vision

- Use updated refraction correction (+/- fellow-eye patching).
- Continue TV watching practice (3 times a day, 20 minutes each)
- Start outdoor practice in quiet familiar place (sunglasses/patching if needed).
- Assess the need for refraction correction.
- Create a personal list of basic intermediate activities according to patient's interests (e.g. playing cards, painting, arranging flowers and preparing meals).
- Start practicing intermediate activities (with high illumination). Identify difficult stages for each task, and practice until improvement is achieved.

3-4 Weeks Post-Op (and following sessions) – Distance, Intermediate and Near Vision

- Use updated refraction correction (+/- fellow-eye patching).
- Continue TV watching practice (3 times a day, 20 minutes each).
- Continue outdoors practice (in street or mall, with sunglasses or patching if needed).
- Continue practicing intermediate activities, emphasizing practice of difficult stages.
- Reading Program: Practice using adequate near correction (if needed, patch fellow eye)

- Assure high illumination
- Use adequate print size
- Create a personal calibration text, which will serve for each home reading session
- Assure stable text positioning
- Teach patients to use thumb tracking technique.

Reading at home is an essential part of rehabilitation. A family member should monitor reading (high illumination, distance adjustment). Practice three times a day. At first only 5 minutes per session, gradually increasing to 20 minutes.

BINOCULAR REHABILITATION

Repeat practice assessment and binocular preference every session.

Further reading in low-vision & rehabilitation

1. **Low Vision Rehabilitation-Caring for the whole person**. Fletcher DC (ed.) Ophthalmology Monograph (12), AAO, 1999.
2. **The Art and Practice of Low Vision**, 2ed. Freeman PB & Jose RT. Boston, Butterworth-Heinemann, 1997.
3. **Primary Low Vision Care**. Nowakowski RW. Norwalk, Appleton & Lange, 1994.

APPENDIX 3 SPONSOR'S COMMITMENTS

The Sponsor is committed to:

1. Complying with all applicable health authority regulations governing the conduct of clinical research studies, including the U.S. Food and Drug Administration.

2. Protecting the rights, health, safety and welfare of study subjects.

3. Informing the clinical investigators of any new information about the study which may affect the health, safety or welfare of the subjects, or may influence their decision to continue participation in the study.

4. Providing the clinical investigators with the study protocol, and a full set of Case Report Forms on which to document the study evaluation variables for each subject entered into the study.

5. Providing the statistical analysis and study report writing resources necessary to complete reporting of the study results.

6. Ensuring equity of consideration among all investigators in multicenter studies in all matters of publications, meeting presentations, etc.

7. Certifying that IRB approval of the protocol and Investigators Agreement will be completed prior to treatment at an investigational site.

APPENDIX 4 INVESTIGATOR'S QUALIFICATIONS AND RESPONSIBILITIES

Each Investigator must be a licensed physician who has completed a residency or preceptorship in ophthalmology. The Investigators have the following responsibilities:

1. **Subject Selection**

   The Investigator is responsible for assuring that all subjects entering the study conform to the patient selection criteria.

2. **Informed Consent**

   The Investigator is responsible for fully reviewing the nature of the study, the possible risks, and alternative treatments with prospective patients prior to their enrollment in the study. The Investigator is responsible for obtaining written Informed Consent in compliance with 21 CFR 50 for each patient, prior to enrollment in the trial. A copy of the signed Informed Consent Form will be maintained in the patient's medical record, and a copy of the signed Informed Consent Form will become an integral part of each Case Report file provided to the Sponsor.

3. **Institutional Review Board (IRB) Approval**

   The Investigator must obtain approval for his participation in this protocol from the IRB for the institution at which the procedure will be performed, prior to entering any patients in the study. The Informed Consent document to be used will also be submitted by the Investigator to the IRB for approval prior to initiation of the study. Assurance that the IRB approval of the study protocol and Informed Consent has been obtained will be provided to the Sponsor prior to initiation of the study.

4. **Subject Evaluations and Data Reporting**

   The Investigator is responsible for complying with the requirements of the study protocol, any amendment or clarifications as published by the study Sponsor (VisionCare) and performing the patient evaluations as described in the study protocol. All information generated by the patient evaluation will be recorded on the Subject Case Report Forms provided by the Sponsor. Case Report Forms will be filled out in black ink or will be typewritten. Any corrections will be made by single lining out and initialing. Correction fluid will not be used. The Investigator will sign and date each individual form upon its completion and will return the originals, not copies, to VisionCare Ophthalmic Technologies. Copies of all Case Report Forms will be retained in the Investigator's office in order to be available for monitoring by VisionCare Ophthalmic Technologies personnel or by authorized FDA personnel. Original laboratory reports will be retained by the Investigator, but as the results become available, they will be entered on appropriate Case Report Forms. Legible reproductions of the original laboratory reports will be included with the completed Case Report Form file.

   Immediately upon completion of each patient examination the completed, signed and dated Subject Case Report Form shall be submitted to the Sponsor for review and statistical analysis.

Investigator(s) will not deviate from the study protocol without prior approval of VisionCare Ophthalmic Technologies unless protection of the health, safety or welfare of study subjects requires prompt action.

5. Record Retention

The Investigator shall maintain all patient records for whichever of the following periods is shortest:

a. A period of two years after the date on which the FDA approves the marketing of the device for the purpose that was the subject of the study.
b. A period of five years after the date on which the results of the study are submitted to the FDA in support of the marketing of the device for the purpose that was the subject of the study.

6. Investigational Material Accountability

The Investigator must maintain accurate records of the receipt of all investigational material shipped by VisionCare Ophthalmic Technologies, including the date, model and serial numbers of the product received. In addition, accurate records must be kept on the amount and date that investigational material, by serial number, was dispensed or returned to the Sponsor. The product label will be placed in the patient's chart and the number recorded on the Case Report Form. The Investigator must assure that study supplies be dispensed only to subjects enrolled in the study per the inclusion / exclusion criteria and under the direct supervision of the Investigator or his / her Co-Investigators.
Records of all investigational supplies received, used and returned must be kept by the Investigator. All unused investigational supplies will be returned to the Sponsor as soon as practical upon completion of the trial. Investigational material accounting procedures must be completed before the study is considered terminated.