Version: 7
Date: 7/13/00
Supersedes protocol dated: 8/20/99

A Randomized Study to Evaluate a Polymeric Patch for Sealing Intraoperative Air Leaks Occurring during Pulmonary Resection

Protocol ID: LIMS 7806

Investigator(s):

Mark S. Allen, MD. Daniel L. Miller, MD, Francis C. Nichols, MD
Mayo Clinic, Rochester, MN

R. Duane Davis, Jr., MD and David H. Harpole, MD
Duke University, Durham, NC

Robert J. McKenna, Jr., MD
Cedars-Sinai Hospital, Los Angeles, CA

Garrett L. Walsh, MD and W. Roy Smythe, MD
MD Anderson Cancer Center, Houston, TX

Douglas E. Wood, MD and Eric Vallieres, MD
U of Washington, Seattle, WA and
Dept. of Veterans Puget Sound Health Care System,
Seattle, WA

Robert J. Keenan, MD
University of Pittsburgh, Pittsburgh, PA

Sponsor:

3M Company
3M Medical-Surgical Division
3M Center, 270-2N-14
St. Paul, MN 55144-1000

CRA/Monitor:

Karen C. Holmen
Clinical Research Specialist
3M Medical-Surgical Division
3M Center, 270-2N-14
St. Paul, MN 55144-1000

Telephone: 651-736-1031
FAX: 651-733-2142
E-mail: kcholmen@mmm.com

3M CONFIDENTIAL: This document contains confidential information, which is the property of 3M. Do not copy, disclose, or circulate without written authorization from the appropriate 3M personnel.

TABLE OF CONTENTS

		Page
1.0	INTRODUCTION	3
2.0	STUDY OBJECTIVE	3
3.0	STUDY PLAN	4
	3.1 Study Design	4
	3.2 General Description	4
	3.3 Study Duration	5
	3.4 Investigators/Investigational Sites	5
4.0	SUBJECTS	5
	4.1 Selection Criteria, Inclusion/Exclusion	5
	4.2 Informed Consent	6
	4.3 Randomization	6
	4.4 Patient Identification	7
	4.5 Withdrawal, Discontinuation and Replacement	7
	4.6 Patient Care	7
5.0	STUDY MATERIALS	8
	5.1 Test Material	8
	5.2 Control Materials	8
6.0	STUDY PROCEDURES & TEST METHODS	9
	6.1 Patient Screening/Baseline Information	9
	6.2 Intraoperative Procedures - Day 0	9
	6.3 In-Hospital Postoperative Follow-up through Discharge	11
	6.4 Outpatient Follow-up Visit - 1 Month	12
7.0	ADVERSE EVENTS	13
8.0	LABORATORY METHODS	14
9.0	PREMATURE DISCONTINUATION OF STUDY	15
10.0	CONCOMITANT MEDICATIONS AND PROCEDURES	15
11.0	DATA ANALYSIS AND STATISTICAL PROCEDURES	15
12.0	FINAL STUDY REPORT	20
13.0	INSTITUTIONAL REVIEW BOARD APPROVAL	20
14.0	PRE-STUDY DOCUMENTATION REQUIREMENTS	20
15.0	REGULATORY STATUS	21
16.0	COMPLETION AND RETURN OF CASE REPORT FORMS	21
17.0	INVESTIGATION MATERIAL INVENTORY AND STORAGE	21
18.0	MONITORING	22
19.0	PROTOCOL MODIFICATION	22
20.0	RECORDS, REPORTS AND RETENTION	23
21.0	CONSENT TO PARTICIPATE	24
22.0	REFERENCES	25

APPENDICES:
- A Study Flow Chart/Randomization
- B Instructions for Use
- C Flow Chart of Clinical Study Activities
- D Clinical Lab Tests
- E Adverse Events/Classification and Definitions
- F Blood Sample Collection and Preparation

1.0 INTRODUCTION

Intraoperative air leaks are a leading complication of many procedures in pulmonary surgery.[1-5,7-9,12-15,18,20,21] They can develop from suture/staple lines and other types of surgical manipulation or simply be due to the fragile state of the diseased lung tissue. Without prompt and effective treatment, air leaks can lead to increased morbidity and extended hospitalization.[9,10] Traditionally, suture techniques and stapling devices have been used to seal parenchymal defects. Both can exacerbate rather than remedy the air leak problem.[1,20] Consequently, there has been a recognized need in the surgical market for a product that effectively seals intraoperative air leaks during lung surgery. Patch type materials for sealing air leaks in lungs have been introduced to the US market but have met with limited success due to their difficulty to use, ineffective solution to the problem, or poor cost/benefit results. Fibrin sealants are emerging as an important adjunct to surgical procedures and one commercial product has just recently been approved for use in the U.S.

3M BioMaterials Technology Center has developed a polymeric patch (Patch) which shows promise for use in sealing or reducing intraoperative air leaks. The 3M Patch material consists of a synthetic cross-linking material and a component derived from albumin (human) USP. The polyethylene-glycol based cross-linker is functionalized with succinate groups, and reacts with the albumin component to form a clear, pliant, hydrogel material. The two liquid components are housed in a mechanical system that mixes them at the point of delivery, initiating a polymerization reaction that results in the formation of an occlusive, compliant patch-like hydrogel material on the tissue surface. This material polymerizes in 20 to 30 seconds, reaching a gel strength sufficient to withstand 30 mm Hg air pressure in 2 minutes and maximum strength in less than ten minutes without the need for additional equipment or energy source. In the presence of normal tissue hydration, the clear hydrogel remains soft and compliant over time, and does not harden or turn brittle. The material, upon *in situ* polymerization, forms an occlusive, adherent, flexible seal over the surface of the tissue. The Patch is reabsorbed over time, degrading over a period of no more than 2-3 weeks.

The Patch has been demonstrated to be biocompatible for implantation based on studies performed on the device in accordance with ISO 10993 Biologic Evaluation and additional animal testing performed to evaluate tissue healing and mass balance. The efficacy of the polymeric patch as a sealant for pulmonary air leaks has been demonstrated in animal models as well. The results of these pre-clinical studies indicate that the Patch is suitable for its intended use in this study and that the potential for adverse events related to the product when used as indicated are low. More detailed information about these studies can be found in the "Report of Prior Investigations".

2.0 STUDY OBJECTIVE

The primary objective of this study is to evaluate the safety and efficacy of the Patch to seal or reduce intraoperative air leaks (IOALs) in patients undergoing a thoracotomy for pulmonary resection, decortication or biopsy and thereby reduce the incidence of postoperative air leaks (POALs). Performance of the Patch, when used adjunctively with standard techniques, will be compared to performance of standard techniques alone for closing air leaks.

The primary efficacy endpoint will be assessed by testing the null hypothesis that there is no difference in the proportion of patients who remain leak-free following lung resection surgery, up to the 1 month follow-up period or the duration of hospitalization, whichever is longer, between the control group and the Patch group versus the alternative hypothesis that the proportions are different between the groups. The presence of air leaks will be assessed by daily observation of air leakage from the chest tube and the patient will be monitored after removal of the chest tube for any recurrence of air leaks post-pull.

The principal measure of safety will be the incidence of adverse events related to the device that are reported during the postoperative hospitalization and the follow-up period as well as any significant changes that are observed in the immunologic testing for cellular/humoral immune response conducted on pre- and post-surgical blood samples of the Patch vs. Control subjects.

The secondary endpoints of interest to further understand the efficacy of the product include:

- Proportion of IOALs in each group that are sealed or reduced, as demonstrated by the "air leak test", prior to completion of the lung surgery.
- Proportion of patients in each group who are free of air leaks immediately following surgery as measured by the presence of air leaks from the chest tube at the first postoperative timepoint once the patient is in the recovery room.
- Duration of postoperative air leaks from the time of surgery until the air leak seals.
- The duration of chest tube.
- The duration of hospitalization.

3.0 STUDY PLAN

3.1 Study Design

This is an open label, randomized (2:1 ratio), stratified, controlled, multi-center study with an enrollment of 174 patients with IOALs. It is expected that approximately 220 patients will need to be initially enrolled in the study in order to have 174 patients that meet the final inclusion/exclusion criteria for intraoperative air leaks. All patients will provide informed consent prior to enrollment in the study and will be randomized into the study if they meet the final intraoperative criteria for air leaks.

3.2 General Description of Study

Thoracotomy patients who have met the initial screening criteria and who have at least one significant intraoperative air leak (≥2 mm in size) as a result of their surgery, as determined by an "air leak test, will be enrolled in the study. Once enrolled, and after recording the size, location and source of the air leak(s) the surgeon will first use standard technique for closing the air leaks. Then the subject will be randomized into either the Patch or Control group. If assigned to the Control group no further treatment is done at this time and a second air leak test is conducted to determine the success of the standard technique in sealing or reducing those leaks. If assigned to the Patch group the surgeon will apply the Patch to the same sites that first received standard technique. There may be some IOALs that the surgeon would not attempt to close using the

standard techniques prior to closing the thoracotomy, e.g., leak is too small or tissue is too fragile to use sutures, staples or cautery such that the surgeon feels that standard closure methods are not necessary or may make the clinical situation worse. In the Patch group, the surgeon will be instructed to apply the Patch to these sites as well, in order to assess the adjunctive use of the Patch where normally nothing would or could be done. Then the second air leak test is conducted.

If there are still air leaks at this point the surgeon can choose to go back and reapply the assigned treatment for that patient or use other surgical techniques that are appropriate, e.g., pleural flap/tent, pneumoperitoneum, to close the air leak and record the action taken. At this point the intraoperative evaluation of the assigned treatment will be complete and the surgeon will close the thoracotomy per standard procedures.

Postoperatively the patient will be monitored regularly to assess the efficacy and safety of the Patch. Data will be collected on the proportion of patients who remain free of postoperative air leaks following pulmonary resection surgery (primary endpoint), the proportion of patients leak free immediately following surgery, the duration of postoperative air leaks from the time of surgery until the air leaks seals, chest tube duration, length of hospital stay, and the incidence of adverse events that occur during the course of the study as well as the assessment of any change in the patients immune response as determined by immunologic testing pre- and post-surgery. At two weeks post surgery the investigator or his designee will call the patient to see how he/she is doing and to ask a few questions related to his/her health since discharge. For patients scheduled to come back for a two week visit the phone call will not be necessary, however, the same set of questions used for the 2-week Post-op Follow-up Telephone Call must be asked of these patients as well. At one-month (4-6 weeks) post surgery, the patient will return to the study site for a follow-up visit that will include a physical exam, chest X-ray, laboratory tests and assessing any adverse events that may have occurred since hospital discharge. A study flow diagram is presented in Appendix A.

3.3 Study Duration

The study duration for each patient will be no longer than 3 months. This includes the time of the initial screening for study inclusion (within 30 days pre-surgery) up to the final follow-up at one month (within 4-6 weeks) post-surgery. The time to complete the total study on 174 subjects is expected to be five (5) to six (6) months. The study enrollment will be terminated when 174 patients with intraoperative air leaks have completed the study, i.e., 116 in the patch group and 58 in the control group.

3.4 Investigators/Investigational Sites

One primary investigator and potentially 1-2 co-investigators at each of 5-6 investigational sites will participate in the study. This number of investigators should allow for total enrollment of a minimum of 174 patients with intraoperative air leaks within approximately five (5) or six (6) months. Each investigator will be asked to complete 15-21 subjects.

4.0 SUBJECTS

4.1 Selection Criteria

The criteria listed below shall be used to determine if a participant is eligible for entry into the study.

4.1.1 Inclusion Criteria

- Subject has been scheduled for an open thoracotomy for lung resection (i.e., lobectomy, bilobectomy, segmentectomy, wedge resection/lung volume reduction), decortication or biopsy within 30 days of the screening evaluation.
- Subject has at least one or more intraoperative air leaks (≥2mm) following the lung resection surgery.
- Subject is male or female and is 18 years or older.
- Subject is able to understand the study procedures and either the patient, patient's guardian, or legally appointed representative has signed the Informed Consent Form.
- Subject is willing and able to complete the entire study as specified in the protocol, including the follow-up visit.
- If subject is a female of childbearing age and not sterilized, is willing to be on an acceptable method of birth control for the duration of the study, 4-6 weeks post-surgery.

4.1.2 Exclusion Criteria

- Subject is pregnant.
- Subject is breastfeeding.
- Subject has a significant clinical disease or condition that may complicate the surgery and/or postoperative recovery such that in the opinion of the investigator it would preclude enrollment in the study because it would be difficult to evaluate the safety and/or effectiveness of the Patch as set forth in the study protocol.
- Subject has a known hypersensitivity to human albumin.
- Subject is enrolled in the National Emphysema Treatment Trial (NETT) study.
- Subject is enrolled in any other study involving tissue sealant materials, synthetic or natural, e.g., fibrin sealant, cyanoacrylates.
- Subject is participating in any other study without prior sponsor approval.

4.2 Informed Consent

The clinical investigator or his/her designee, is responsible for ensuring that written informed consent to participate in the investigation is obtained before including any individual as a subject in the investigation. The investigator shall seek such consent only under circumstances that provide the prospective subject or the representative sufficient opportunity to consider whether or not to participate and that minimizes the possibility of coercion or undue influence. The process is designed to give the patients all the information that they need to decide about participating in the study; to ensure that patients understand the information and to give patients a chance to consider participation in the study. The process should permit the patient to ask questions and to exchange information freely. Specifically, the investigator will explain to each patient the nature of the study, its purpose, procedures, duration, alternative treatment, confidentiality of records, availability of medical treatment, person(s) to contact with questions, potential risk and benefits and the voluntary nature of participation.

After the explanation, the patients will be asked to sign and date the informed consent document if they wish to participate in the study. The signature should be dated to permit verification that consent was actually obtained before the patient's participation in the study. A copy of the consent form must be provided to the patient.

Prior to obtaining IRB/FDA approval, the investigator may determine whether potential subjects would be interested in participating in an investigation, but shall not request the written informed consent of any subject to participate, and shall not allow any subject to participate before IRB and FDA approval letters have been received and are on file with the sponsor.

4.3 Randomization Procedures

Following lung surgery, patients with IOALs will be stratified by percent of predicted FEV_1, ≤40% and > 40% of predicted FEV_1, and randomly assigned (in a 2:1 ratio) to either the Patch or Control group. To accomplish this, each investigator at a site will be given a set of consecutively numbered sealed envelopes, one set for each FEV_1 group, containing a treatment assignment. As a patient meets the final eligibility criteria (has at least one significant air leak), the investigator will open the FEV_1appropriate envelope with the next consecutive "subject" number and assign that treatment to the patient. Assignment will be in strict consecutive order according to the randomization plan. If a patient has no leaks acceptable for inclusion in the study, no randomization of that patient will occur and no study number will be assigned. His/her exclusion will be noted on the Patient Eligibility/Screening Log and no further documentation of that patient is required.

4.4 Patient Identification

Each patient who has signed an informed consent will be assigned a sequential patient/screening ID number unique to the patient and study site. This number will be used up until surgery where final enrollment into the study is based on whether or not the patient has a significant air leak. Patients with a significant air leak will be assigned a sequential study enrollment number unique to the subject, FEV_1 stratification (1XX ≤40% of predicted FEV_1 and 2XX > 40% of predicted FEV_1), study site (1-5), and investigator (1-3).

For example:

Site	Investigator	Screen ID	FEV1	Subject ID (once enrolled)
1	1	901	35%	
1	1	902	40%	
1	1	903	45	
1	1	904	70%	

In addition to the enrollment number, the subjects' initials will appear on each Case Report Form (CRF). Further, in all telephone contacts or written correspondence, the subject will be identified by the study enrollment number and his/her initials.

4.5 Withdrawal, Discontinuation, Replacement and Lost-to-Follow-up

Subjects may withdraw from the study at any time without prejudice. The investigator will record the details of subject withdrawal on the case report form. The subject will keep their subject number. If a subject is discontinued from the study prior to discharge all available information will be analyzed and a replacement subject will be enrolled.

Every attempt will be made to see all subjects at the one-month follow-up visit. If the subject cannot be seen in person, and if after two documented phone calls and one certified letter and no response, the patient will be considered lost-to-follow-up.

4.6 Patient Care

Subjects will receive standard care according to currently accepted standards of medical practice throughout the study. Special attention will be paid to provide as much consistent patient care across the different centers as possible. General agreement by investigators to conduct the study per the study protocol, pre-study investigator/study coordinator training, and periodic monitoring will be used to assure consistency of patient care and data collection.

Chest Tube Management

Chest tube management is key to the evaluation of the primary endpoint. To ensure consistency between investigators and across study sites, the postoperative management of subjects chest tubes will be handled similarly across all study centers in order to allow for comparison of air leak and chest tube duration across study sites. The postoperative management and removal criteria are specified in the "Study Procedures and Test Methods" section under "In-Hospital Postoperative Follow-up (Days 1-7)", page 14. This will address management biases that may affect chest tube removal/duration outcomes.

5.0 STUDY MATERIALS

5.1 Test Material

5.1.1 Description

The Patch will be available in a 2.0 ml dose applicator. One unit includes: a liquid component, derived from albumin (Human) USP a[redacted]l, and a powder component, polyethylene glyco[redacted] which is rehydrated with sterile water just prior to delivery. Both components are housed in a dual channel, syringe-like mechanical system that mixes them at the point of delivery, initiating a polymerization reaction that results in the formation of an occlusive, compliant patch-like hydrogel material on the tissue surface.[redacted]acts to cross-link the albumin component to provide a cross-linked matrix with sufficient mechanical and adherent strength to seal air leaks in injured or diseased pulmonary tissue. This material polymerizes in 20 to 30 seconds, reaching maximum gel strength in less than 10 minutes.

5.1.2 Labeling

Each investigational device for the study will bear the following labeling information: study number, product name, contents, lot number, device ID

number, instructions for use reference, storage conditions, 3M name and address, that the product is sterile, non-pyrogenic, single use and the statement "CAUTION: Investigational device. Limited by Federal law to investigational use."

Directions for assembly and use of the investigational material can be found in Appendix B.

5.1.3 Provision of Study Materials

Sufficient samples of the test material will be supplied by the sponsor for use in this study by the investigators.

5.2 Control Product

Standard sutures, staples or cautery devices supplied by the hospital for thoracic surgery will be used. Sponsor will not supply these materials. There will be no attempt to standardize these across participating centers in this trial.

6.0 STUDY PROCEDURES AND TEST METHODS

A table summarizing the evaluations to be performed at baseline and through follow-up can be found in Appendix C, Flow Chart of Clinical Study Activities. The Case Report Forms (CRF) referenced in this section will be provided to each Investigator by the Sponsor for use in this study.

6.1 Patient Screening/Baseline Information

Patient screening and baseline information must be completed within 30 days prior to surgery. Any tests that are normally conducted prior to surgery and that are not specific to this study may be conducted prior to obtaining Informed Consent from the patient. Any study specific tests must be conducted after he/she has voluntarily signed the Informed Consent Form. The following information will be obtained and evaluations performed and recorded on the following forms:

6.1.1 Medical History and Risk Factors Form

- Pertinent medical history, which will include any underlying diagnoses which may impact the patient's overall health status or prognosis.
- Patient's medical diagnosis and current disease status.

6.1.2 Patient Screening Tests /Physical Examination

- Age, sex, height and weight.
- Complete Blood Count (CBC), Blood Chemistry.
- See Appendix D for detailed list.
- Serum human chorionic gonadotropin (HCG) pregnancy test (females of childbearing potential only w/in 7 days of surgery).
- Blood and serum collection for immunologic testing for cellular/humoral immune response. Sample collection and preparation are presented in Appendix F.

- Chest X-ray (PA & Lat)
- 12-lead ECG with interpretation reviewed by a physician.
- Spirometric test, FEV1 and FVC, % predicted.
- General physical exam.

After completing the above information the investigator will complete the Pre-op Patient Eligibility Form with the exception of IOAL status. Final eligibility will be determined intraoperatively.

6.2 Intraoperative Procedures - Day 0

After the surgeon has completed the designated surgery using standard surgical techniques and prior to closing the thoracotomy, the following intraoperative study procedures will be performed. The data specific to the study will be recorded on the Operation Summary and Intraoperative Leak Test forms.

6.2.1 The surgeon will observe for IOALs by filling the chest cavity with warm saline solution or water to submerge the entire lung, while simultaneously inflating the lung up to 20-30 mm Hg (30-40 cm H_20) and looking for air bubbles, indicating the presence of air leaks ("air leak test"). At this point the investigator will determine whether the subject has a "significant" air leak, one that is ≥2 mm in size, and thus meets the final inclusion/exclusion criteria.

6.2.2 If a subject has no leaks or only clinically insignificant leaks, the subject will not be enrolled in the study and his/her ineligibility will be noted on the Patient Screening/Eligibility Log .

6.2.3 For subjects with one or more significant IOALs the surgeon will:

6.2.3.1 Record the size, location and source of the bubbles coming from the leak(s) on the CRF using:

- Small: <2 mm bubbles
- Moderate: 2-5 mm bubbles
- Large: > 5 mm bubbles

Note: If the subject has more than five (5) IOALs, the surgeon need only record the required data for the first five (5) air leaks that he/she would normally close first (largest to smallest).

6.2.3.2 Apply standard technique. Once the leaks have been recorded any excess saline solution should be suctioned from the cavity, ventilation to the lung should be briefly suspended and then the surgeon will use standard technique (sutures, staples, cautery or nothing) to close the air leaks that were identified above. If necessary, irrigate the individual leaks on the lung surface with additional saline to locate the exact site needing closure. Any air leaks where "nothing" is done should be identified and the reason noted on the CRF.

6.2.3.3 Randomize the subject. After applying the standard technique and before repeating the second "air leak test", the next sequential randomization envelope will be opened to determine if the patient is in the Patch or Control group. For a subject assigned to the Control group no further treatment will be done at this time and one should proceed to "6.2.3.5" below.

6.2.3.4 For subjects assigned to the Patch group the surgeon will go back to each of the sites identified in "6.2.3.1" above and apply the patch to those same sites. There may be some leaks the surgeon will not choose to close with the standard technique, i.e., leak is too small or tissue is too fragile to use sutures or staples. The surgeon will apply the Patch to these sites as well.

The manufacturing date/lot number and unique identification number of each unit of test material used for each patient will be documented by placing the peel-off label on the investigational device package directly on the Device Use form.

6.2.3.5 After all air leaks have been treated according to the assigned treatment, the success in sealing or reducing the air leaks will be assessed by repeating the "air leak test" and observing for air bubbles at the same air pressure parameters as the initial test (6.2.1). Using the criteria listed below, the surgeon will assess each treated air leak and record on the CRF as:

0 = Completely closed (no bubbles)
1 = < 2 mm bubbles
2 = 2-5 mm bubbles
3 = > 5 mm bubbles

6.2.3.6 If there are still air leaks at this point the surgeon can choose to go back and reapply the assigned treatment for that patient or use other surgical techniques that are appropriate at this point in time, e.g., pleural flap/tent, pneumoperitoneum, to close the air leak, record the action(s) taken, and the results. At this point the intraoperative evaluation of the two closure techniques will be complete and the surgeon will close the thoracotomy per standard procedures.

Note: If an air leak treated with the Patch is still leaking after the first application of the Patch the surgeon may reapply the Patch up to two more times if necessary to try to close or reduce the air leak. The number of attempts should be recorded on the CRF, as well as the final outcome.

6.3 In-Hospital Postoperative Follow-up

Standard postoperative care will proceed according to currently accepted standards of medical practice and all subjects in both groups will be observed for any adverse events occurring throughout the course of the study. All adverse events occurring during this

time will be recorded on the Adverse Event Report Form. In addition, the following data will be obtained and recorded, at the times specified:

6.3.1 In-Hospital Follow-up, Day 0

6.3.1.1 Chest X-ray (PA), immediately following surgery (0-6 h) and post endotracheal extubation, to determine lung expansion and then as clinically indicated, at the discretion of the surgeon until removal of the chest tube(s).

6.3.1.2 Status of chest tube: on suction or water seal.

6.3.1.3 Chest tube drainage, cc's immediately post-op in the recovery room

6.3.1.4 Amount of air leakage as measure by the presence of air bubbles in water seal chamber immediately post-op in the recovery room using the following scale:

- Small = occasional intermittent bubbles
- Moderate = frequent bubbles, but not continuous
- Large = continuous bubbles
- None

6.3.1.5 Adverse events

6.3.2 In-Hospital Follow-up - Days 1-7

6.3.2.1 Chest X-ray (PA) will be taken prior to CT removal (w/in 24 hrs) and after CT removal (w/in 24 hrs) to confirm adequate lung expansion, otherwise only when clinically indicated.

6.3.2.2 Daily vital signs: supine blood pressure, heart rate, respiratory rate, body temperature.

6.3.2.3 Status of chest tube, on suction or water seal.

6.3.2.4 Daily chest tube drainage (cc's/days).

6.3.2.5 Daily assessment of air leakage until air leak ceases.

6.3.2.6 Adverse events

6.3.2.7 Air Leak Management Post-op. If other procedures are performed or required to seal an air leak, record date, procedure performed and outcome on form.

6.3.4 Chest Tube Management and Removal Criteria

The chest tube will be placed on suction (20-25 cm H_20) for the first 24 hours. After 24 hours, if there is no air leak, a switch to water seal will be made. If there is still an air leak after 24 hours the switch will be at the discretion of the surgeon; a record of what was done will be noted. The chest tube will be removed when: 1) there is no more air leakage following the switch to water seal, 2) the lung has expanded sufficiently and/or there is no significant increase in the size of a pneumothorax, in the investigator's opinion, that would prevent discontinuation, and 3) drainage has reduced to < 5 cc/kg/24 hours or < 2.5 cc/kg/12 hours.

6.3.5 Heimlich Valve Use

Occasionally the attending physician will decide to discharge a subject, who still has an air leak, with a Heimlich valve. When this occurs, the subject will be

asked to return on a weekly basis until the tube is removed. The date the air leak ceased will be the day the tube is removed.

6.3.6 Hospital Discharge

6.3.6.1 Date/time discharged from hospital.
6.3.6.2 General Physical examination
6.3.6.3 CBC, Blood Chemistry.
6.3.6.4 Date air leakage ceased.
6.3.6.5 Date chest tube removed.
6.3.6.6 Adverse events
6.3.6.7 Schedule for 1-month follow-up visit (w/in 4-6 weeks of surgery).

Subjects who have not been discharged from the hospital by Day 7 will be observed for any adverse events while in the hospital. If they continue to wear a chest tube they will also be monitored for air leakage and fluid drainage so that the date of air leak cessation and chest tube removal can be recorded.

6.4 2-Week Post-op Follow-up Telephone Call

Two (2) weeks after surgery the investigator or his designee will follow up with the patient on the phone to see how he/she is doing. A questionnaire is provided for the caller to use during the call. If the patient is scheduled for a follow-up visit to the clinic at 2-weeks the same set of questions on the questionnaire for the 2-Week Post-op Follow-up Telephone Call must be asked of the subjects, in addition to any other information normally gathered at the visit. Any adverse events that have occurred from the time of discharge through the 2-week follow-up must be recorded on the Adverse Event Report Form.

6.5 Out Patient Follow-up Visit (1 month Post-op)

The subject will come to the clinic one month (within 4-6 weeks) after surgery for their follow-up visit. The following information will be obtained and data recorded on the 1 Month Follow-up Visit Form:

6.5.1 General physical examination
6.5.2 Adverse event evaluation, including continuous adverse events from the last day subject was hospitalized and any new adverse event since hospital discharge.
6.5.3 Chest X-ray (PA & Lat)
6.5.4 CBC, Blood Chemistry
6.5.5 Blood and serum collection for immunologic testing for cellular/humoral immune response. See Appendix F for sample collection and preparation.

Note: The subject's medical records must state that the patient has been part of a clinical study and indicate the relevant dates. An adhesive label will be supplied by the sponsor containing this information that can be applied to the subject's chart.

7.0 ADVERSE EVENTS/EFFECTS

7.1 Definitions

7.1.1 Adverse Events: Any undesirable clinical occurrence in a subject whether or not the event is product related; any untoward deviation in health away from baseline. Device related adverse events are those considered by the investigator to have a reasonable likelihood of being associated with the investigational device and are called adverse device effects. A listing of AEs that may be related to the investigational device is found in Appendix E. This list is not meant to be all inclusive, rather it is meant to provide examples of some of the complications that may occur in thoracotomy patients.

7.1.2 Serious Adverse Event: Any experience characterized as:
a) causing hospitalization or unduly prolonging hospitalization, e.g., because of potential disability or necessitated intervention,
b) being life-threatening, or
c) causing death.

7.1.3 Unanticipated adverse device effect: Any *serious* adverse effect on health or safety or any life-threatening problem or death caused by, or associated with, a device, if that effect, problem or death was not previously identified in nature, severity, or frequency in the investigational plan or IDE application.

Although the potential is considered low, for this study anticipated adverse device effects might include: an allergic or foreign body reaction to the Patch and/or the possible failure of the patch to seal an air leak properly resulting in a persistent air leak, atelectasis or even pneumothorax.

There are many complications that are associated with standard pulmonary surgery that would not normally be considered device related. It will be up to the investigator to assess each event for its relatedness to the device and its seriousness.

7.2 Procedures for Handling Adverse Events

7.2.1 Identify Adverse Events

The investigator is responsible for identifying adverse events that occur to each subject throughout the study and follow-up period to confirm the safety of the device and determine if an "unanticipated adverse device effect" has occurred.

7.2.2 Record the Adverse Event

For each adverse event that occurs, the investigator must record that event on the Adverse Event Report Form which includes information on the nature of the adverse event, the date of onset and resolution, any action taken, the outcome and the subject's current status.

Note: The administration of certain medications or treatments that are given prophylactically, e.g., as part of the sites standard care for thoracotomy patients, without an event triggering their administration, is not considered an adverse event and does not have to be recorded on the Adverse Event Report Form. However, all concomitant medications or treatments that are administered after surgery will be recorded on the Record of Concomitant Medications/Treatments Form.

7.2.3 Adverse Event Assessment

Part of the investigation is an assessment of the seriousness of the event, its association with the investigational device, and the anticipated or unanticipated nature of the event. The CRF provides specific criteria to use to address the severity of the adverse event and its relationship to the device for the investigator to document his/her judgment of each. See Appendix E for definition of classifications.

7.2.4 Adverse Event Reporting

If the adverse event is characterized as device related, serious and unanticipated, the investigator shall complete the Unanticipated Adverse Device Effect Form for that event and report it to the sponsor's CRA/monitor and the reviewing IRB as soon as possible, within 24 hours of occurrence, but no later than 10 working days after first learning of the event. The sponsor will report the results of such an evaluation to the FDA and to all reviewing IRBs and participating investigators within 10 working days after the sponsor first receives notice of the effect.

All other adverse events can simply be documented by the investigator for the sponsor as in 7.2.2 above and will be summarized in a progress report to all IRBs and the FDA at least yearly or in the Final Study Report, whichever comes first.

7.2.5 Subject Care and Follow-Up

All subjects who experience an adverse event shall be given whatever appropriate therapy is indicated for the problem and shall be monitored closely until all events are resolved, i.e., subject's health has stabilized or returned to baseline, or death occurs, in which case a full pathologist's report will be required.

7.2.6 The contact for all adverse events related to this study is:

Karen C. Holmen
Clinical Research Specialist
3M Medical Surgical
3M Center, Bldg. 270-2N-14
St. Paul, MN 55144-1000

Phone: 651-736-1031
FAX: 651-733-2142

8.0 LABORATORY METHODS

8.1 Clinical laboratory values are to be generated by standard protocols within each investigational institution. Information concerning methodology and normal ranges and units of measurement must be submitted to 3M before commencement of the study as well as documentation that the test laboratory meets the applicable quality standards set forth in the Clinical Laboratory Improvement Amendments of 1988 (CLIA), as well as any State or local requirements, to perform the tests on human specimens specified in this protocol.

8.2 The pulmonary function tests should be performed in compliance with the American Thoracic Society (ATS) standardization of spirometry. Predicted values for FEV1 and FVC will be determined using the prediction equations from European Community Coal & Steel.

8.3 Immunologic testing to assess a patient's humoral and cell-mediated immune response to the Patch and/or its degradents will be conducted by Dr. Judith B. Ulreich, Ph.D., Director of Research Labs, University of Arizona, according to protocols in compliance with the Good Laboratory Practice Regulations 21 CFR 58 and by established Standard Operating Procedures of the laboratory. The specific tests include the Lymphoproliferation Assay (LPA) and an ELISA test to detect IgG anti-albumin antibodies. To conduct these tests it will be necessary to draw whole heparinized blood from patients for the LPA and prepare a serum sample for the ELISA test. Each study site will be instructed on collection and preparation of samples for shipment to the test lab. Details are presented in Appendix F.

9.0 PREMATURE DISCONTINUATION OF THE STUDY

3M or the investigator has the right to discontinue the study at any time for medical and/or administrative reasons. As far as possible, this should occur after mutual consultation. If the study is discontinued prematurely, all study materials (completed, partially completed and empty case report forms, study product, etc.) must be returned to 3M.

10.0 CONCOMITANT MEDICATIONS AND PROCEDURES

All concomitant medications and postoperative procedures necessary for the patient's management will be allowed. Any medications or treatments that are administered after surgery will be recorded on the Record of Concomitant Medications/Treatments Form.

11.0 DATA ANALYSIS AND STATISTICAL PROCEDURES

11.1 Sample Size Determination

Review of studies published in the literature reveals considerable variability in the expected average duration of air leaks, chest tube drainage, chest tube duration, and length of hospital stay for patients undergoing a variety of lung resection surgeries. Studies will vary depending on the type and extent of surgery as well as any risk factors present in the patient population.

For purposes of this study, the primary efficacy measure of interest is the reduction of postoperative air leaks. Previously published studies[6,16,19,23] suggest that postoperative air leaks occur in 60-70% of patients who have intraoperative air leaks following pulmonary resection surgery even after various surgical techniques are used to attempt to seal them. To determine sample size, a clinically significant decrease in the percent of patients with postoperative air leaks is taken to be a least 25%. Based on a two-sided alpha level of 0.05, statistical power of 80%, and a 2:1 randomization of patients to patch and standard techniques for sealing air leaks, a total sample size of 156 patients is required. To allow for dropouts 116 patients will be randomized to the patch group and 58 patients will be randomized to a concurrent control group using standard techniques to treat air leaks.

In addition, the literature[16] indicates that between 70-80% of patients have intraoperative air leaks after lung resection surgery. A high percentage (50-70%) of these air leaks remain unsealed after standard techniques including sutures, stables, cautery or nothing if the surgeon feels that the closure methods are not necessary or may make the clinical situation worse. It is anticipated that the patch will be highly effective (>90%) in sealing all air leaks during the intraoperative period. A total sample size of 45 individual leaks was determined to be sufficient to detect a statistically significant difference in the success rate for sealing intraoperative air leaks when using the patch as compared to using standard techniques alone. This sample size is based on a 2:1 randomization scheme, statistical power of 80% and a two-sided alpha level of 0.05. This secondary parameter of the proportion of intraoperative air leaks sealed will be regarded as an endpoint to demonstrate the immediate functional success of the patch during surgery. The sample size estimate based on the proportion of patients with postoperative air leaks at any time following surgery will be more will be more than sufficient to address the success of the patch in sealing intraoperative air leaks. Each patient enrolled in the trial may have up to five individual leaks, which will be included in the assessment of this secondary endpoint.

Since the incidence of adverse events is a secondary endpoint for assessing safety, the sample size of 100 patients in the patch group would be sufficient to provide the following upper limit for estimates of the incidence of postoperative adverse event rates as demonstrated in the table below. The literature[9,10,17] shows a range of non-fatal and fatal adverse event rates in pulmonary resection surgeries that vary from <1% to 20%. Based on these estimates, the following 95% one-sided confidence intervals would be obtained for a sample size of 100 patients.

Observed Incidence	Sample Size	Upper 95% CI Limit [a]
1%	100	4.6%
2%	100	6.2%
5%	100	10.3%
10%	100	16.4%
15%	100	22.2%
20%	100	27.7%

[a] based on one-sided upper exact confidence limits for the incidence (p).

The sample size for testing the hypothesis of no difference in the incidence of adverse event rates between the patch and control groups would need to be extremely large. For

example, to have a statistical power of 80% using a one-tailed alpha level (.05) test to compare an incidence of 5% in the control group versus 10% in the patch group would require a total of 881 patients (587 in the patch group and 294 in the control group). The sample size of 138 patients was felt to be sufficient to get information regarding the relative incidence of adverse event rates in this patient population but would not be sufficient to test the hypothesis of no difference between the patch and control groups.

11.2 Data Analysis

11.2.3 Baseline Measurements

The demographics, medical history, baseline characteristics relating to the type and extent of lung surgeries and other pertinent risk factors will be compared using Student t-tests or an equivalent nonparametric method for continuous variables and chi-square tests or Fisher's Exact tests for categorical responses. If there are differences between treatment groups with regard to some of these baseline measures, their impact on the primary endpoints will be examined using covariance analysis or logistic regression methods. Possible covariates, which may be of interest include but are not limited to age, gender, pre-surgical pulmonary function and medical/surgical risk factors.

To assure some degree of comparability of the two groups with regard to important risk factors, the randomization will be stratified according to the patient's presurgical pulmonary function as measure by percent of predicted FEV_1. Patients will be randomized within the strata of $\leq 40\%$ of predicted FEV_1 and $> 40\%$ predicted FEV_1. This stratification is being employed to maintain comparability of treatment groups with regard to this important risk factor and is not intended to provide sufficient power for a separate analysis of each stratum.

11.2.4 Primary Endpoint

The primary endpoint of interest in this study is the percent of patients without postoperative air leaks as measured by daily observation of air leaks via chest tube. The multiple investigators participating in the trial will agree to uniform criteria for determining when an air leak terminates and chest tube management for the trial. The proportion of patients without postoperative air leaks at any time following surgery, up to the 1 month follow-up period or the duration of hospitalization, whichever is longer, will be compared between treatment groups using a logistical model for binary outcomes. If necessary, the impact of important risk factors on the primary endpoint will be assessed by covariance analysis or logistic regression methods as deemed appropriate. Possible covariates which may be of interest, include but are not limited to age, gender, pre-surgical pulmonary function and medical/surgical risk factors.

Any patient who is lost to follow-up or for whom the status of any air leak is unknown will be considered as "treatment failures" in the analysis of this primary endpoint. All patients randomized to treatment will be included in the denominator in calculating the proportion of patients who remain free of air leaks for the duration of their participation in the study.

A two-tailed p-value of 0.05 or less will be considered evidence of a statistically significant difference between the patch and control groups in the analysis of this primary endpoint.

In addition to the overall duration of postoperative air leaks, the proportion of patients who have persistent air leaks will be compared between treatment groups using Fisher's Exact Tests. A persistent air leak will be any air leak that lasts longer than 7 days following surgery. This is an important clinical endpoint but the sample size will not have sufficient power to detect small differences in the proportion of patients with persistent air leaks between the patch and control groups.

11.2.5 Secondary Measures of Efficacy

The secondary parameters of interest in this study include sealing of intraoperative air leaks, duration of postoperative air leaks, duration of chest tube, and duration of hospitalization.

For each patient the number and extent of intraoperative air leaks will be quantified according to the scale presented in the protocol. Due to the logistical difficulties associated with recording and classifying intraoperative air leaks, only up to five of the largest leaks for any individual patient will be included in this analysis. The improvement in air leaks (reduced size) and the proportion of air leaks completely sealed will be compared using categorical methods to determine if there is any statistically significant difference between the leaks sealed using the patch as compared to standard methods method of sealing.

In addition to assessing each individual leak, a chi-square test or a Fisher's Exact test will be performed to compare the proportion of patients in each group who are free of air leaks immediately following surgery once in the recovery room. This later analysis will be based on the presence of air leaks detected with the chest tube immediately following completion of surgery.

Another endpoint of interest is the duration (in days) that postoperative air leaks persist in each treatment group. Air leaks which are present following surgery will be followed daily via observation of the chest tubes to determine when the air leak ceases. The elapsed time (in days) from surgery to the time the air leaks cease will be compared between treatment groups using both parametric and nonparametric methods.

In addition, a time-to-event analysis will be performed to compare the cumulative proportion of sealed air leaks as a function of postoperative follow-up (days). This analysis will be performed using survival data methods, i.e., log rank, proportional hazards, etc. All patients randomized to treatment will be included in the analysis, including any patients who are lost-to-follow-up. Those patients who are lost to follow-up will be considered censored observations in this analysis. It is not expected that there will be many patients lost to follow-up for this analysis since it is anticipated that air leaks will be sealed in all patients before discharge from the hospital, except in those instances where a patient is discharged with a Heimlich valve.

In the event a patient develops an air leak following a postoperative period with the absence of air leaks, the duration of the air leak will be regarded as the total elapsed time since surgery until the air leak terminates. Therefore, in this situation, the leak free period from the end of surgery to the onset of the air leak will also be included in the calculation of the duration of air leak for that patient.

Patients will be allowed to go home with a Heimlich valve. This will affect the accuracy in recording the duration of postoperative air leaks since the patient will not be in the hospital for daily observation but will return on a weekly basis for assessment of air leakage. In these rare instances, the analysis of duration of air leaks will use the number of days elapsed from surgery until the patient returns to the clinic with no evidence of air leak.

Patients who do not have a postoperative air leak will be include in the analysis of duration of air leaks with a value of 0.5 days assigned. This arbitrary non-zero value is based on the need to include all patients in the time-to-event analysis. Essentially all patients must be considered "at risk" since by definition they must have had an air leak during surgery to qualify for enrollment in the trial. Therefore, by assigning those patients who do not have a postoperative air leak a value of 0.5 days for air leak duration, they can be include in the analysis.

Other secondary endpoints collected during the postoperative period of the study include duration of chest tube insertion and length of hospital stay. These measures are often reported in the literature as comparative measures of effectiveness in lung resection surgeries. They are often affected by factors that are not directly related to the sealing of air leaks during surgery. Therefore, it is not likely that this study will document a statistically significant benefit that can be attributed to the use of the patch. Student t test or a nonparametric alternative will be performed to compare the groups with regard to these secondary measures.

A two-tailed p-value of 0.05 will be considered statistically significant for all secondary measures.

11.2.6 Safety Measure

11.2.6.1 Adverse Events

The principal measure of safety will be the incidence of adverse events reported during the postoperative hospitalization and during the follow-up period. The incidence of postoperative adverse events and adverse events reported during the follow-up period will be compared between the patch and control groups using a Fisher's Exact test. A p-value of 0.05 or less will be considered statistically significant. In addition, the upper 95% confidence limit for the incidence of each adverse event will be determined. For adverse events that occur in a sufficient number of patients, a logistic regression analysis will be performed to determine the importance of certain risk factors such as age, type and extent of surgery, baseline pulmonary function, response to immunologic testing and method of sealing air leaks.

During the conduct of the study, an amendment was implemented which required that patients be contacted by the investigator at approximately two weeks after the operation to assess the patient's experience with certain targeted symptoms/complaints since the time of the operation and discharge from the hospital. These included difficulty breathing, persistent cough, elevated temperature (101 degrees F), upper respiratory infection (or common cold), and pain, redness, swelling, or drainage from the surgical incision. It is recognized that incidence of checklist reported symptoms will generally be higher than spontaneously reported adverse events. Therefore, a separate summary of he incidence of these adverse events will be tabulated for those patch and control patients who were involved in the study after implementation of the amendment.

During the process of querying the patients for these specific symptoms, other adverse experiences may be spontaneously reported. These adverse experiences will be collected and reported on the adverse event reporting CRF and statistically handled in the same manner as all other spontaneously reported adverse events.

11.2.6.2 Immunologic Test Results

Immunologic testing for cellular/humoral immune response will be measured pre- and post-surgically in all patients who are randomized. The proportion of positive responses to either the ELISA anti-Patch IgG antibody test or the Lymphoproliferation Assay (LPA) will be compared between the patch and control groups using Fisher's Exact Tests. A positive response will be based on a post-surgical result, which is greater than two standard deviations from the mean pre-surgical response for all patients. In addition, the change in response from the pre-surgery to post-surgery blood and serum samples for each individual patient will be determined. A positive change in response will be based on changes that exceed two standard deviations from the mean of the change in response observed in the untreated control group.

11.3 Multi-center Investigation

The results of the primary efficacy measures will be pooled for analysis. In addition the results will be examined for each center and investigator participating in the study to assess consistency of the results. Where possible, the analysis will control for other significant risk factors that may be reflected in the patients treated by each investigator during the course of the trial. At a minimum, the results for the primary efficacy and safety measures will be tabulated and presented by center and investigator. The study is not adequately powered to statistically test for heterogeneity of results among investigators.

11.4 Drop Outs

The drop out rates and the reasons for patient drop out between the two groups will be compared to assess if there are any statistically significant differences. If significant differences are observed the impact on the overall conclusions of the trial will be assessed.

11.5 Interim Analyses

There are no formal plans to perform an interim analysis of the results for purpose of early termination of the trial.

12.0 FINAL STUDY REPORT

The sponsor shall notify FDA within 30 working days of the completion or termination of the investigation and shall submit a final report to FDA and all reviewing IRBs and participating investigators within 6 months after completion or termination. This report will be a record of the total conduct of the study and its results and will be subject to approval by the Principal Investigators, who will sign the final report.

13.0 INSTITUTIONAL REVIEW BOARD APPROVAL

Prior to initiation of the study at any investigational site the IRB for the facility must review and approve the study, according to 21 CFR 56, including the study protocol and informed consent forms. The IRB must notify the investigator and institution in writing of its decision and the investigator will in turn submit a copy of the approval letter from the IRB to the sponsor.

14.0 PRE-STUDY DOCUMENTATION REQUIREMENTS

Prior to initiation of the study and shipment of investigational device, the following documents must be received by the sponsor from the investigator:

14.1 A signed investigator agreement which includes the protocol.

14.2 Curricula Vitae of the investigator and of co-investigators who will be assisting in the conduct of the study.

14.3 Copy of the approval letter by the IRB approving the final protocol and informed consent form.

14.4 The name, address and chairperson of the IRB, and a list of the IRB members plus their institutional affiliations, occupations, and a means of determining gender makeup, or a statement from the IRB specifying that their membership complies with FDA regulations.

14.5 Completed budget agreement.

14.6 A description of the clinical laboratory facilities that will be used and all currently applicable ranges of values considered to be normal by that laboratory for those determinations, which it performs for the study. Certification renewals and changes in laboratory normal ranges must be submitted to the sponsor as soon as they become available. The lab certification number, date of certification, and certifying body should also be sent with the normal ranges.

14.7 A list of names of the clinically responsible individuals of the investigator's institution who will participate in any way in the study, their title and responsibility and the names of other possible participants and their professional backgrounds (e.g., medical doctor, biochemist, nurse, statistician).

15.0 REGULATORY STATUS

The test material is considered a "significant risk" device and requires an approved IDE and IRB approval prior to study start. This study will be run in full compliance with IDE regulations. It is the sponsor's intent to submit the results of this study in a Premarket Approval (PMA) to the FDA.

16.0 COMPLETION AND RETURN OF CASE REPORT FORMS

All case report form entries must be made in black ink for duplication purposes. The investigator must review all entries for completeness and correctness. When changes or corrections are made on any case report form, the investigator, co/subinvestigator, nurse, or study coordinator must draw a single line through the error, then initial and date the correction.

The investigator agrees to complete and sign all CRFs in a timely fashion after completion of each patient and make them available for full inspection by the clinical monitor.

Before acceptance, the clinical monitor will review the case report forms for completeness and adherence to the protocol. The original will be collected by the monitor. The copy will be retained by the investigator.

Forms include the case report forms, adverse events form, informed consent forms, protocol amendments/deviations form, materials accountability form.

17.0 INVESTIGATIONAL TEST MATERIAL DISPOSITION, INVENTORY,STORAGE

3M requires its sponsored investigators to maintain adequate investigational test material security at all times. Therefore, the investigator will take the following actions with regard to investigational materials:

17.1 Upon receipt of investigational materials, the investigator or designated individual will check the contents and return the completed Supply/Inventory/Receipt Form to the 3M CRA/Monitor.

17.2 The investigator will keep investigational materials in a secure storage area, accessible only to those individuals authorized by the investigator.

17.3 The investigator or designated individual will maintain an inventory on the Investigational Test Material Disposition Form. This inventory will include the description and quantity of investigational materials received during the course of this study, as well as a record of the investigational materials that are used and on whom and when these agents are used. This inventory record shall indicate the quantity and description of all investigational materials on hand at any time during the course of the study.

17.4 At the end of the study, all unused investigational materials will be returned to 3M. The investigator or designated individual will conduct an inventory and record the results of this inventory on a form that the investigator will sign.

17.5 The investigator agrees that the investigational device will be supplied only to subjects under his supervision or named as investigators, co/sub investigators, authorized personnel taking part in the study.

18.0 MONITORING

3M BioMaterials Technology Center, as sponsor of this study, has the responsibility of assuring the proper conduct of the study. Study monitoring will be carried out by the sponsor's CRA to assure that:

18.1 The investigator clearly understands and accepts the obligations incurred in undertaking the clinical study.

18.2 The study is being conducted in accordance with the protocol, regulations and company policy and that the facilities used continue to be acceptable.

18.3 The rights and safety of all human subjects involved in the study are protected.

18.4 The data to be submitted to the FDA in support of the safety and effectiveness of the investigational device are accurate and complete.

To accomplish this, monitoring visits and/or telephone calls will be utilized at appropriate intervals, i.e., pre-investigation, study initiation, interim, and final close-out. FDA's Monitoring Guideline and the sponsor's written procedures will be used as references to meet this obligation.

19.0 PROTOCOL MODIFICATIONS

19.1 Definitions

19.1.1 Protocol amendments: are defined to be changes in procedures that are identified and documented before they are initiated. Amendments to this document shall be carefully negotiated and documented by the study monitor via a Protocol Amendment form. Prior to implementation, the sponsor must get FDA approval of such changes and IRB approval when the change involves the rights, safety or welfare of subjects or scientific soundness of the study design.

19.1.2 Protocol deviations are distinguished from protocol amendments in that they typically occurs in an emergency or unplanned circumstance to protect the life or physical well being of the subject. Such situations are generally rare and are to be discouraged. When an emergency or other circumstance occurs that requires a departure from the protocol for an individual patient, it will be only for that patient. The investigator or other physician in attendance must contact the CRA within 24 hours at the following phone number: (651) 736-1031.

19.2 Procedure to Follow

19.2.1 The investigator must complete a Deviation from Protocol form, giving a description of the deviation, the circumstances surrounding the deviation, the name of the 3M individual contacted, the reason for the departure, and the decision of whether or not the patient was allowed to continue in the study. A copy of the completed form should be sent to the CRA within 24 hours of identifying the occurrence.

19.2.2 Deviations made to protect the life or physical well being of a subject in an emergency must be reported to the IRB and FDA within 5 working days after the sponsor learns of the occurrence.

19.2.3 The CRA is responsible for documenting protocol amendments/deviations and assuring appropriate regulatory approval when necessary. Minor corrections or clarifications of the protocol that do not affect patient safety will be documented as a note to file and to the investigator.

19.3 **Contact:** Karen C. Holmen (651) 736-1031(Phone)
(651) 737-5320 (FAX)

20.0 RECORDS, REPORTS AND RETENTION REQUIREMENTS

20.1 Records that must be maintained by the investigator:

- All correspondence with another investigator, an IRB, the sponsor, a monitor, FDA, etc.
- Records of receipt, use, or disposition of the investigational device;
- Records of each subject's case report history and exposure to the device, including informed consent and adverse events;
- The protocol and documentation (date and reason) for each deviation for the protocol that occurs during the study, and
- Any records that FDA requires to be maintained by regulation or by specific requirement for a particular investigation

20.2 Reports that must be prepared and submitted by the investigator to the sponsor and the IRB:

- Any unanticipated adverse device effect occurring during the study. (Due no later that 10 working days after the investigator first learns of the effect.
- Progress report on the investigation. (Due to the short duration of this study periodic phone calls with the CRA will suffice)
- Any deviation from the protocol made to protect the life or physical welling being of a subject in an emergency. (See section 19.1.2 on protocol deviations for details.)
- Any use of the device without obtaining informed consent. (Due within 5 working days after such use.)
- A final report (within 3 months after termination or completion of study).
- Withdrawal of IRB approval of the investigator's part of an investigation. (Due within 5 working days of such action to sponsor only).
- Other (upon request by IRB or FDA, about any aspect of the investigation).

20.3 Other investigator obligations related to study, it's records and reports:

20.3.1 The investigator shall permit authorized FDA employees, at reasonable times and in a reasonable manner:

- To enter and inspect any establishment where devices are held, including any establishment where the device is used/implanted or where records of results from use of devices are kept.
- To inspect and copy all records relating to an investigation.
- To inspect and copy records that identify subjects, upon notice that FDA has reason to suspect that adequate informed consent was not obtained, or that reports required to be submitted by the investigator to the sponsor or IRB have not been submitted or are incomplete, inaccurate, false, or misleading.

20.3.2 The investigator also agrees not to promote or to sell the investigational device unless authorized to do so by the Sponsor. He further agrees not to unduly prolong the investigation, or to represent that the investigational device is safe or effective for the purpose it is being investigated.

20.4 Retention

The investigator or sponsor shall maintain the required records during the investigation and for a period of two years after the following two dates: The date on which the study is terminated or completed, or the date the records are no longer required for purposes of supporting a premarket approval application.

21.0 CONSENT TO PARTICIPATE

I have thoroughly reviewed the protocol and agree to participate according to the terms described. I understand the elements of the study design and agree to accept my obligations and responsibilities as a primary investigator in this study.

(Signature not necessary. Refer to signature on original protocol attached to the Investigators Agreement, Protocol V6 and subsequent amendments to the protocol.)

_____

Primary Investigator Signature Date

_____ _____

Monitor Signature Date

22.0 References

1. Bergsland J, Kalmbach, Balu D, Feldman MHJ, Caruana JA, Gage AA. Fibrin sealant: an alternative to suture repair in experimental pulmonary surgery. J Surg Res. 1986; 40:340-345.

2. Cerfolio RJ, Tummala RP, Holman WL, Zorn GL, Pacifico AD. A Prospective algorithm for the management of air leaks after pulmonary resection. Soc Thoracic Surgeons, 34th Mtg. 1997.

3. Cooper JD, Patterson GA. Lung volume reduction surgery for severe emphysema. Seminars in Thoracic & Cardiovascular Surgery. 1996; 8:52-60.

4. Cooper JD. Technique to reduce air leaks after resection of emphysematous lung. Ann Thorac Surg. 1994; 57: 1038-9.

5. Fischel RJ, McKenna RJ. Bovine pericardium vs. bovine collagen to buttress staples for lung reduction operations. Ann Thorac Surg. 1998; 65: 277-9.

6. Fleisher, Arlen.G., et.al. Effect of routine fibrin glue use on the duration of air leaks after lobectomy, Ann Thorac Surgery 1990;49:133-134.

7. Hazelrigg SR, Boley TM, Naunheim KS, et.al. Effect of bovine percardial strips on air leaks after stapled pulmonary resection. Ann Thorac Surg. 1997; 63: 1573-5.

8. Kaiser L, Joseph EB. Complications of thoracoscopy. Ann Thorac Surg. 1993; 56:797-8.

9. Keagy BA, Phar WF, Bowes DE, Wilcox BR. A review of morbidity and mortality in elderly patients undergoing pulmonary resection. Am Surg. 1984; 50: 213-216.

10. Keagy BA, Lores ME, Starek PJ, Murray GF, Lucas CL, Wilcox BR. Elective pulmonary lobectomy: factors associated with morbidity and operative mortality. Ann Thorac Surg. 1985; 40: 349-352.

11. Kirsh MM, Rotman H, Behrendt DM, et.al. Complications of pulmonary resection. Ann Thorac Surg. 1975; 20: 215.

12. Kjaergard HK, Weis-Fogh US, Sorensen H, et.al. Autologous fibrin glue - preparation and clinical use in thoracic surgery. Eur J Cardiothoracic Surg. 1992; 5: 52-54.

13. McCarthy PM, Trastek VF, Bell DG, et.al. The effectiveness of fibrin glue sealant for reducing experimental pulmonary air leak. Ann Thorac Surg. 1988; 45:203-05.

14. McKenna RJ, Brenener M, Gelb AF, et.al. A randomized prospective trial of stapled lung reduction vs laser bullectomy for diffuse emphysema. J Thorac & Cardiovasc Surg. 1996; 111:317-322.

15. McKenna JG, Fischel RJ, Brenner M, Gelb AF. Use of the Heimlich Valve to shorten hospital stay after lung reduction surgery for emphysema. Ann Thorac Surg. 1996; 61:1115-7.

16. Mouritzen, C., et.al. The effect of fibrin gluing to seal bronchial and alveolar leakages after pulmonary resections and decortications. European Journal of Cardiothoracic Surgery, 1993 (7):75-80.

17. Nagasaki, Fumio, et.al. Complications of surgery in the treatment of carcinoma of the lung. Chest 1982 (82)1: 25-29.

18. Normori H, horio H. Gelatin-resorcinal-formaldehyde glutaraldhyde glue-spread stapler prevents air leakage from lung. Ann Thorac Surg. 1997; 63:352-5.

19. Ponn, Ronald B., et al. Outpatient Chest Tube Management. Annals of Thoracic Surgery, 1997 (64): 1437-1440.

20. Ranger WR, Halpin D, Amarprut S, Sawhney LM, Locicero J. Pneumostasis of experimental air leaks with a new photopolymerized synthetic tissue sealant. Am Surg. 1997; 63:788-95.

21. Vaughn CC, Wolner E, Dahan M, et.al. Prevention of air leaks after pulmonary wedge resection. Ann Thorac Surg. 1997; 63: 864-6.

22. Sierron DH. Fibrin Sealants adhesive systems: review of hteir chemistry, material properties and clinical applications. J Biomatr Appl. 1993; 7:309-352.

23. Wong, Kit, Goldstraw, Peter. Effect of fibrin glue in the reduction of postthoracotomy alveolar air leak. Annals of Thoracic Surgery 1997 (64) 979-981.

Appendix A - Open-label Randomized Control Group Comparison

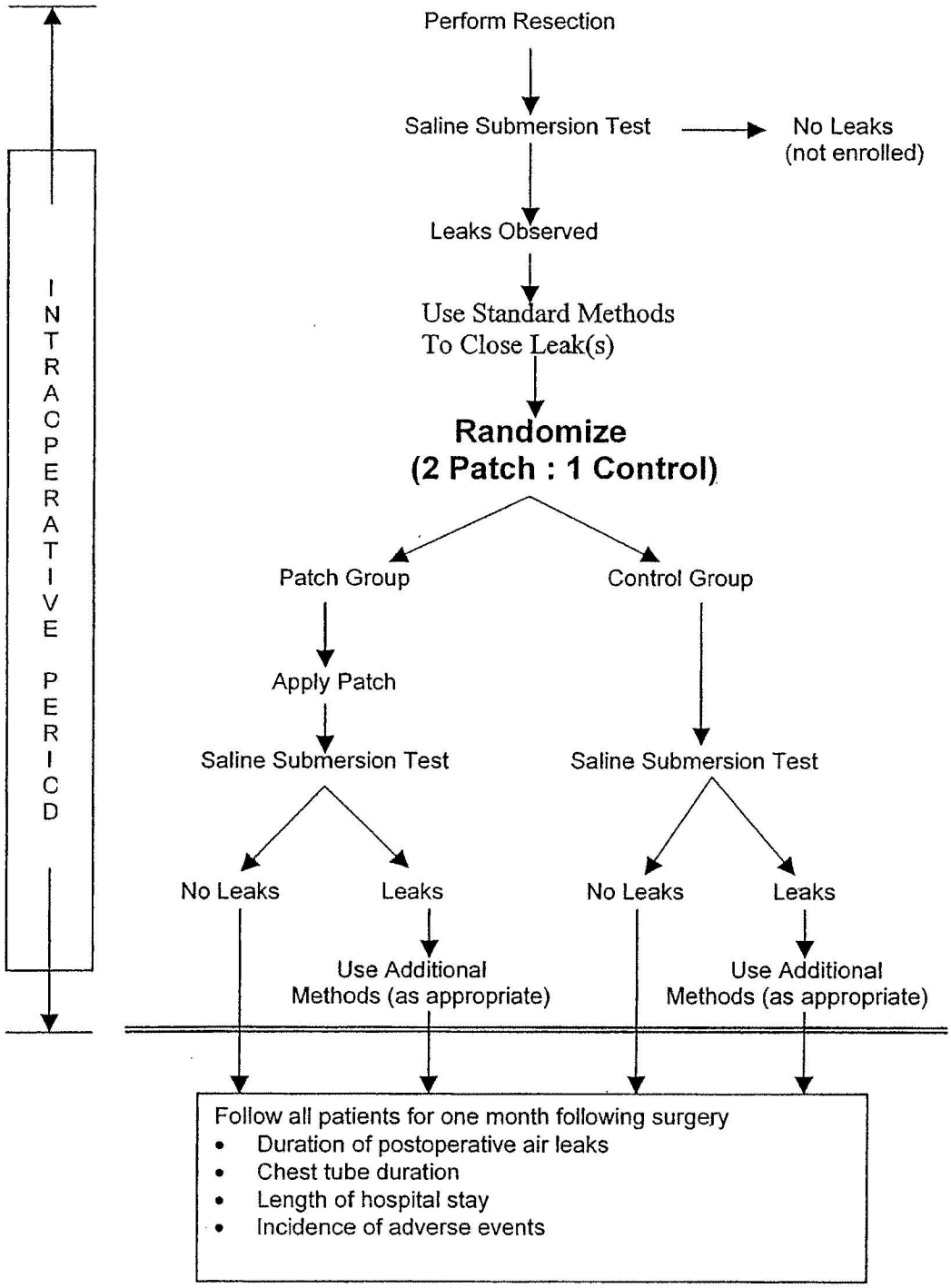

APPENDIX B — Instructions for Use

3M Pulmonary Polymeric Patch

CAUTION: INVESTIGATIONAL DEVICE!

Limited by Federal Law to Investigational Use.

Composition

3M Pulmonary Polymeric Patch is a two component hydrogel sealant, consisting of the following substances:
1) Human Serum Albumin solution (HSA).
2) Poly (ethylene glycol) di-succinimidyl succinate (PEGSS2), a dried powder reconstituted with sterile water.
Mixed at the time of application, the liquid components quickly cure *in situ* to form a flexible patch for sealing and/or reducing air leaks in the lung. After application, the body resorbs the patch material within 28 days.

Intended Use / Indications

3M Pulmonary Polymeric Patch is intended as an adjunct to standard tissue closure techniques in pulmonary surgery to:

- Seal or reduce air leaks by reinforcing soft tissue where weakness exists.
- Seal or reduce air leaks in lung tissue where mechanical closure is not possible or not typically attempted.

Individualization of Treatment / Dose

- The amount of 3M Pulmonary Polymeric Patch solution required depends upon the surface area to be sealed.
- Applied as a spray, a 2 mL 3M Pulmonary Polymeric Patch applicator will normally cover an area 20 cm^2 (3 sq in) when applied 1 mm thick.

Contraindications

- 3M Pulmonary Polymeric Patch is not intended for uses other than indicated.
- A history of an allergic reaction to albumin is a specific contraindication to the use of this product.

Warnings

- Do not save the contents of opened packages for reuse. 3M Pulmonary Polymeric Patch is intended for single use, and cannot be resterilized. Partially used product should be discarded. Opened but unused product must be accounted for per the study protocol.
- Do not use 3M Pulmonary Polymeric Patch if the package or any of its components are damaged or opened. Product within a damaged or opened package should be considered contaminated.
- Injecting 3M Pulmonary Polymeric Patch directly into blood vessels may cause a thromboembolic event, which may result in patient injury or death.
- The albumin component of 3M Pulmonary Polymeric Patch is prepared from pooled human venous plasma. The plasma is derived from blood collected from volunteer donors. Use of this product presents some risk of transmitting infectious agents. While this risk is deemed remote, it cannot be totally excluded. This also applies to pathogens that are as yet unknown.

Adverse Events

As with any other plasma derived product, a patient may develop an allergic reaction to this device or its breakdown products. Such allergic reactions are rare and may be characterized by edema localized to the area of application, shortness of breath, wheezing, coughing, or a rapid drop in blood pressure.

Precautions

- 3M Pulmonary Polymeric Patch is an investigational device, Limited by Federal law to Investigational Use.
- The applicator spray tip should be held approximately 5 cm (2 in) from the site of application. If the spray tip is positioned too close to the site, air bubbles may be trapped in the patch material. Air bubbles can reduce the burst strength of the patch.
- Do not use the product after the expiration date indicated on the container and package label. Expired product may not cure sufficiently to form an effective seal.
- Store 3M Pulmonary Polymeric Patch within the recommended temperature range. Failure to do so may result in poor patch performance.

Storage

- 3M Pulmonary Polymeric Patch should be stored at 35°F to 45°F (2° to 8°C).
- Do not freeze.

Maintaining the Device Effectiveness

- Sealant should be used within 20 minutes after dissolving the white powdered PEGSS2 in water.

Use in Specific Populations

3M Pulmonary Polymeric Patch is indicated for use on patients undergoing pulmonary surgeries specified in the study protocol, who meet enrollment criteria, and are under the supervision of a Clinical Investigator named in the study protocol.

Patient Counseling Information

The HSA component of 3M Pulmonary Polymeric Patch is prepared from pooled human venous plasma. The plasma is derived from blood collected from volunteer donors. Precautions are taken to assure the blood products viral safety, including the screening of blood donors and testing of each donated unit for viruses. In addition, a validated viral inactivation step is implemented in the processing of all HSA product. Because of albumin's unusual stability compared to other human blood products, it is possible to heat treat (pasteurize) the protein. This routine processing for ten hours at 60°C has been shown to effectively eradicate known viral pathogens *(Erstad, BL, Pharmacother, 1996; 16:996-1001)*.

How Supplied

3M Pulmonary Polymeric Patch is supplied sterile and is intended for single use only.

Each kit contains:

One each - 1mL B-D plastic syringe with 0.5 in 26 ga needle

One each - 5mL Vial of USP sterile water for injection (Used for reconstitution of the PEGSS2)

One each - pre-loaded cartridge containing 1 mL Human Serum Albumin solution

One each - pre-loaded cartridge containing 130 mg poly(ethylene glycol) di-succinimidyl succinate (PEGSS2) as a dried white powder

One each - Applicator assembly

Two each - Spray tips

Instructions for Use

A. Sealant Preparation

Practicing aseptic technique, open the sterile pack and pass its contents into the sterile field.

1. Using the 1mL syringe provided, draw 1mL of sterile water into the syringe and express any air in the syringe.
2. Inject the 1mL of sterile water into the cartridge containing the white powder (PEGSS2).
3. Mix the cartridge contents by gently rocking the cartridge end to end. The solution is ready for use when it is clear and contains no un-dissolved powder.
4. With the nose of the applicator pointed up, load both cartridges into the twin-chambered applicator housing (without spray tip attached). Gently press the cartridges to seat them into place.
5. Insert the push rod assembly into the openings in the rear of the cartridges.
6. With the nose of the applicator pointed up, briskly flick it to free any air bubbles. Express the air by gently but firmly pushing up on the plunger. Take care to express as little fluid as possible during this process.
7. Wipe the nosepiece with a clean gauze to remove any liquid that may have been expressed with the air. Avoid mixing of components by not wiping from one aperture across the other.
8. Place a spray tip on the nose of the applicator and rotate clockwise about 1/4 turn until locked.
9. Apply Sealant. Refer to section B. Sealant Application for detailed information.

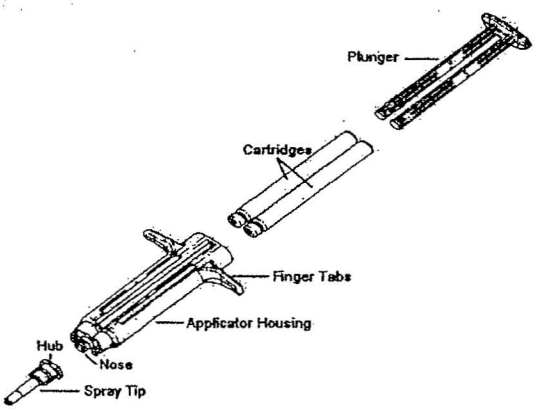

B. Sealant Application

Note: The unique design of the spray tip allows for sealant application as a spray or as a stream. Firm steady pressure on the plunger will yield a spray, while gentle pressure will yield a stream of sealant. Interruption of the application for approximately 10 seconds may result in occlusion of the spray tip. If occlusion occurs remove the spray tip, wipe the end of the applicator to remove any fluid and attach a new spay tip (provided) onto the end of the applicator as before.

1. Select the tissue surface to be sealed. (Note: Each 2 mL applicator will supply enough sealant to cover an area 20 cm^2 (3 sq in) 1 mm thick.
2. Irrigate the area to be sealed with saline to remove any pooled blood or blood clots. Evacuate irrigation solution with suction or sponge prior to sealant application.
3. Ventilation to the affected area should be stopped. If ventilation needs to be maintained, reducing the tidal volume is recommended to minimize air leakage and lung movement during application of the sealant.
4. Hold the spray tip approximately 2 inches (5 cm) from the tissue to be sealed, and apply firm, steady pressure to the plunger.
5. Maintain a firm pressure on the plunger and move the spray tip from side to side along a line from the distal to the proximal margin of the tissue surface to be sealed.
6. The sealant cures in 20-30 seconds, forming a flexible patch. The patch can be tested 2 minutes after application. Sealant application may be repeated if necessary. Repeat applications will require replacing the previously used Spray Tip with the additional tip provided in the kit.
7. If the applicators contents are not entirely used in the first application, immediately remove the spray tip and wipe the nosepiece clean to prevent the remaining material from activating. A new spray tip can then be attached and the remaining material applied.
8. If more than one kit is needed to seal a defect, additional kits should be prepared and applied as required

APPENDIX C
CLINICAL STUDY ACTIVITIES
3M Pulmonary Polymeric Patch Study (LIMS 7806)

Procedure	Screening Up to 30 days	Intra-Op	Post-Op Day 0	Post-Op Day 1-7 Prior to Discharge	Discharge	1 Month Follow-up Visit
Informed Consent[1]	X					
Med History/Risks	X					
Physical Exam	X				X	X
Vital Signs (BP, RR, HR, Temp)	X			X	X	X
Laboratory Tests (CBC, Blood Chem)	X				X	X
Spirometry (FEV1)(FVC)	X (w/in 90 days)					
Chest X-ray	X (w/in 45 days) (PA&L)		X (PA)	X[3] (PA)		X (PA&L)
12-lead ECG	X					
Pregnancy Test[2]	X					
Serologic Testing (LTT, ELISA)	X					X
Demographics	X					
Inclusion/Exclusion	X	X (final)				
Operation Summary		X				
Air Leak Test		X				
Randomization		X				
Air Leak Test		X				
Post-op Air Leakage			X	X[4]		
Chest Tube (CT) Drainage/Duration			X	X[4]		
Adverse Events		X	X	X	X	X

*All within 30 days of surgery unless otherwise noted above.

1. Obtain prior to entering into study and before any study related testing is conducted. Tests not specific to study and normally conducted prior to surgery may be completed prior to informed consent.
2. Females of childbearing potential only, w/in 7 days of surgery.
3. Take prior to pulling CT (w/in 24 hrs) and after pulling CT (w/in 24 hrs).
4. If CT remains in past Day 7 (or the patient is sent home with a Heimlich valve), CT must be monitored daily (at each follow-up visit) until removed.

APPENDIX D

Clinical Lab Tests

The following battery of tests should be run when hematology and blood chemistry testing is called for in the study protocol:

Hematology:

1.Red blood cell count
2.White blood cell count,
3.Hemoglobin
4.Hematocrit
5.Mean cell hemoglobin concentration
6.Platelet count
7.Differential count.

Blood Chemistry:

1. Serum sodium
2. Potassium
3. Chloride
4. Calcium
5. Bicarbonate
6. BUN
7. Creatinine
8. Glucose
9. Total Protein
10. Albumin
11. Total bilirubin
12. Uric acid
13. Cholesterol
14. Phosphorus
15. ALT
16. AST
17. Alkaline phosphate,
18. LDH
19. Creatine kinase.

Appendix E

Criteria for Classification of Adverse Events

The severity of adverse events may be graded as follows:

Mild: The adverse event is transient and easily tolerated. No special treatment is needed. Subject is aware of signs/symptoms, but they are easily tolerated.

Moderate: The adverse event causes discomfort and interferes with the patient's usual activities. Symptomatic treatment is possible. Signs/symptoms are sufficient to restrict but not prevent subject's daily activity.

Severe: The adverse event interferes considerably with the patient's usual activities and may be incapacitating or life threatening. Hospitalization and treatment may be or are required. Subject is unable to perform usual activity.

Serious: Causing inpatient hospitalization or unduly prolonging hospitalization, that is life threatening or causing death.

The relationship of the adverse event to the investigational device is assessed using the following definitions:

Possibly related: The adverse event has a timely relationship to the investigational device administration. However, a potential alternative etiology may be responsible for the adverse effect.

Probably related: The adverse event has a timely relationship to the investigational device administration and the causative relationship can clearly be established. No potential alternative etiology is apparent.

Probably not related: There is no evidence that the adverse effect has a relationship to the investigational material. It was either present before the study, a symptom(s) of primary disease, due to use of concomitant medications, an intercurrent illness, or an intercurrent event.

Adverse Events that May Be Related to the Investigational Device

Note: This list is not meant to be all inclusive, rather it is meant to provide examples of some of the complications that may occur in thoracotomy patients.

Atelectasis
A collapsed or airless state of part or all of the lung. Confirmed by chest X-ray, bronchoscopy and/or treated by bronchoscopy.

Segmental Pneumonitis
Acute infection of lung segment, with any two of the following, in conjunction with an elevated temperature (>38.5 degrees C): high WBC count, positive sputum culture, pulmonary infiltrate confirmed by chest X-ray.

Pneumothorax
Accumulation of air or gas in the pleural space as confirmed by chest X-ray.

Empyema
Purulent exudate in pleural cavity confirmed by aspiration or visual observation of fluid collected in the chest tube drainage system.

Prolonged Air Leak
An air leak that persists for more than 7 days postoperatively.

Allergic Reaction
A hypersensitivity reaction that results a delayed type sensitivity or anaphylaxis (either localized or systemic). Symptoms may include: edema, redness, other inflammatory responses, difficulties in breathing, hives, eczema or life-threatening effects such as circulatory shock and asphyxia. .

Appendix F

Blood and Serum Sample Collection (Times/Amounts)

For Lymphoproliferation Assay (LPA) and IgG Anti-albumin Antibody Assay (ELISA)

Samples to be Collected*	Pre-Surgery (w/in 30 days)	Follow-up Visit (4-6 weeks post-op)
Whole Blood (Draw blood into "green-topped" tubes)	3 X 7 ml or 2 X 10 ml	3 X 7 ml or 2 X 10 ml
Serum (Draw blood into "Red-topped" tubes)	2 X 10 ml	1 X 10 ml

* See Guidelines for Blood and Serum Sample Preparation, Labeling, Storage, Packaging and Shipment in the Study Protocol, Appendix F, for specific details.