APPENDIX A

STUDY PROTOCOL

Cardima® REVELATION™Tx Microcatheter System

and NavAblator™ Ablation Catheter

Evaluation of Radiofrequency (RF) Ablation for

Atrial Fibrillation in the Right Atrium

Protocol Number: (C97-103-AF)

Phase III Pivotal

Investigational Plan

For

IDE #G970280

August, 2001

Study Sponsor:
Cardima®, Inc.
47266 Benicia Street
Fremont, CA 94538-7330
(510) 354-0300

TABLE OF CONTENTS

1. Investigational Plan 1

1.1. Study Purpose 1

1.1.1. Introduction 1
1.1.2. Pharmacological Therapies 1
1.1.3. Non-pharmacological Interventional Therapies 1
1.1.4. AV Junction Ablation 1
1.1.5. Surgical Maze 2
1.1.6. Catheter Ablation - Experimental Studies 2

1.2. Animal Studies 3

1.2.1. REVELATION™ Tx 3
1.2.2. NavAblator™ 3

2. Previous Clinical Experience With the REVELATION™ Tx 4

2.1. United States Experience with the REVELATION™Tx 4
2.2. European Clinical Experience With the REVELATION Tx™ 6
2.3. Additional Relevant Publications 7

2.3.1. Right-atrial Radiofrequency Ablation of Atrial Fibrillation 7

2.4. Animal Studies 8
2.5. Clinical Studies 8
2.6. Conclusions 10
2.7. Name of the Investigational Devices 10
2.8. Intended Use of the Investigational Devices 10
2.9. Goals and Objectives of the Investigation 11
2.10. Duration and Extent of Investigation 11
2.11. PMA Application 11

3. Clinical Protocol 12

3.1. Overview of Study 12
3.2. Number of Subjects 14
3.3. Source of Subjects 14
3.4. Age and Sex of Study Subjects 14
3.5. Inclusion/Exclusion Criteria 14
3.6. Enrollment Procedure 15

3.6.1. Patient Screening 15

3.7. Cardiac Event Recorder 16
3.8. Baseline Observation Period 16
3.9. Baseline Evaluation 17
3.10. Study Procedure 20

3.10.1. Patient Preparation 20
3.10.2. Pre-Procedure Diagnostic Assessment 20
3.10.3. REVELATION™ Tx System Setup (see Figure 1) 20
3.10.4. Right Atrium Access 21
3.10.5. Trajectories for RF Applications 22
3.10.6. Determination of Catheter/Tissue Contact 24
3.10.7. RF Energy Delivery using the REVELATION™ Tx 24
3.10.8. RF Energy Delivery using the NavAblator™ 25

3.11. Assessments 25

TABLE OF CONTENTS

3.11.1. Procedural Assessments **25**
3.11.2. Post-procedural Assessments **25**
3.11.3. Follow-up Assessments **26**
3.11.4. Adverse Effects **27**
3.11.5. Anticipated Adverse Effects **27**
3.11.6. Criteria for Measuring Effectiveness **28**

4. Data Analysis and Reporting **29**

4.1. Quality Assurance of the Data ***30***
4.2. Justification of Sample Size ***30***
4.3. Statistical Analysis ***31***
4.4. Methods to Eliminate Bias ***32***
4.5. Study Termination ***32***

5. Risk Analysis **33**

5.1.1. Potential Risks to Study Subjects **33**
5.1.2. Potential Mechanical/Electrical Failure Modes **35**
5.2. The Manner in Which the Potential Risks Will Be Minimized ***36***
5.3. Potential Benefits Of Procedure ***36***
5.4. Patient Population ***37***
5.5. Justification for the Investigation ***37***

6. References **39**

1. Investigational Plan

1.1. Study Purpose

1.1.1. Introduction

Atrial fibrillation (AF) is the most common significant cardiac arrhythmia in the United States, affecting approximately 2.1 million people (Cobbe, 1994). Both the incidence and the prevalence of AF in the general population increases with age, with prevalence rates ranging from 0.05% in patients aged 25-35 years to >5% in patients over age 69 years (National Heart, Lung, Blood Institute (NHLBI) Working Group, 1993).

AF is associated with significant morbidity and mortality. Approximately one-third of arrhythmia related hospitalizations can be attributed to AF (Cobbe, 1994). Currently, the mechanism of AF is believed to be the result of multiple reentrant wavelets impeding the normal deactivation sequence of the atria and resulting in an uncoordinated atrial contraction with subsequent loss of atrial transport and reduction in ventricular filling. Clinically, it may be seen in conjunction with other cardiovascular conditions (e.g., hypertension, mitral stenosis, cardiomyopathy) or it may occur with no concomitant cardiovascular disease state (termed "lone AF"). While patients with AF may be asymptomatic, clinical presentations can range from complaints of shortness of breath, palpitations, fatigue, and dizziness to chest pain, congestive heart failure and stroke.

The association between AF and stroke is well known, with an approximate fivefold increased risk of stroke in patients with AF compared to the general population, resulting in about 75,000 AF-related strokes per year (NHLBI, 1993). Treatment for AF is directed at reducing the risk of thromboembolism and stroke, restoring or maintaining sinus rhythm and/or controlling ventricular response.

1.1.2. Pharmacological Therapies

Current pharmacological approaches to AF are palliative and in many cases, unsatisfactory. Negative dromotropic pharmacological therapy (e.g. digoxin, beta-blockers) for control of atrioventricular (AV) node conduction frequently leaves the patient in persistent AF. Anti-arrhythmic drug therapy (e.g. flecainide, quinidine) is limited by poor efficacy and in some patients may increase mortality due to the potentially pro-arrhythmic effects of these drugs (Echt, 1991, Coplen, 1991).

1.1.3. Non-pharmacological Interventional Therapies

Repeated direct current (DC) transthoracic cardioversion necessitates anticoagulation, repeated admission to the hospital, and repeated administration of general anesthesia with its associated risks. The lack of an effective conventional therapy for AF has led to the development of novel interventional procedures, including the implantable atrial defibrillator, dual chamber pacemakers, the surgical maze procedure, and catheter-based ablation. Surgical and catheter-based techniques offer potentially curative therapy while avoiding the long-term risks of anti-arrhythmic drug therapy.

1.1.4. AV Junction Ablation

The conventional ablation procedures to control rapid ventricular response to AF unresponsive to negative dromotropic medication consist of His bundle ablation (Scheinman, 1982) and AV nodal modification (Williamson 1994). The drawbacks of His bundle ablation include (1) the patient remains in AF with the persistent life-long risk

of thromboembolic stroke and without AV synchrony resulting in reduced stroke volume and (2) the procedure gives the patient a new condition - pacemaker dependency. Pacemakers themselves are not free of acute and long-term complications, including lead displacement, pneumothorax, infection, and device or lead failure and death. For these reasons, His bundle ablation is now offered to patients every year who are generally elderly with an inactive lifestyle and with low expectations of functional improvement.

1.1.5. Surgical Maze

Over the last decade, anatomical approaches to treating AF called the maze and compartment surgical procedures were developed to effectively compartmentalize the atria by the creation of linear incisions and cryothermal lesions in order to restrict and channel the propagation and reentry of the multiple wavelets that constitute AF. This was the first curative therapy for AF. Although highly effective, with up to 93% of patients' arrhythmia free and off anti-arrhythmic medication, these surgical procedures are limited by their invasiveness and incur the risks associated with open heart surgery and prolonged bypass times (Cox, 1996). The operative mortality for the open surgical technique has been 2.7% at the center with the greatest experience (Cox, 1994). As a result, the performance of the maze and compartment operations is limited at most centers to those patients who are undergoing concomitant open heart surgical procedures (e.g. mitral valve replacement). The high efficacy but undesirable risks of the surgical procedures have raised the clinical question as to whether such compartmentalization of the atria could be achieved by percutaneous radiofrequency catheter ablation and thereby avoid the risks of open heart surgery.

1.1.6. Catheter Ablation - Experimental Studies

Results from experimental animal studies have demonstrated that linear transmural atrial lesions can be created transvenously by linear array multi-electrode microcatheters. The resultant linear lesions have been shown in these animal models to produce conduction block and to render acute AF non-inducible. Each of these animal models, however, has limitations in its clinical relevance that stem not only from the method of AF induction and maintenance (pericarditis, vagal stimulation and rapid pacing), but also from the inherent physiological and anatomical characteristics of the selected species. The atrial mass, the left and right distribution of the mass, the location of anatomic obstacles such as the pulmonary veins, the atrial refractoriness and the intra-atrial conduction velocity in a 70 kg. human with AF secondary to ventricular diastolic dysfunction may be expected to have significantly different requirements for catheter ablation than a 30 kg. dog with pericarditis.

Within the above limitations of experimental studies, the following has been demonstrated of the Cardima® REVELATION™ Tx Microcatheter System in a rapid pacing model of AF in goats (Keane 1997, Keane 1997, Keane 1999, in press)

- manipulation of the Cardima® REVELATION™ Tx Microcatheter System and the Cardima® Naviport deflectable guide within the heart under fluoroscopic guidance is atraumatic and safe
- endocardial catheter ablation can produce atrial lesions which are transmural both on acute analysis and on survival up to four weeks post ablation
- lesion depth correlates closely with reduction in electrogram amplitude and rise in pacing threshold post ablation
- right atrial endocardial catheter ablation results in linear conduction block as assessed by high density epicardial isochronal mapping studies

- right atrial endocardial catheter ablation renders AF of acute onset non-inducible
- right atrial endocardial catheter ablation can result in functional compartmentalization of chronic AF

1.2. Animal Studies

1.2.1. REVELATION™ Tx

An animal study was conducted by Dr. Hugh Calkins at the Johns Hopkins University in Baltimore. The purpose of the study was to prospectively evaluate the dimensions of RF lesions created using the REVELATION™ Tx as compared to commercially available 7F catheters using a pullback (aka "drag-and-burn") approach. Ten dogs underwent catheter ablation using either catheter in various predetermined sites. RF energy was delivered for 60 seconds using temperature control at 60 degrees C (standard) and 50 degrees C (REVELATION Tx). Animals were sacrificed 4 weeks following the procedure.

Results showed that the lesions created with the REVELATION Tx were narrower (2.6 ± 0.9mm vs 4.9 ± 0.9mm; $p<0.0001$), more likely to be continuous (18/25, 72% vs 6/16, 37%; $p=0.05$), more linear (25/25, 100% vs 10/16, 62%; $p=0.0001$), and more likely to be anchored to an anatomic structure (23/25, 92% vs 10/16, 62%; $p=0.03$) than those lesions which were created using a standard catheter. No significant ($p<0.05$) difference was observed in overall lesion length and the proportion of lesions, which were transmural over at least 50% of their length.

The authors concluded that atrial lesions created using the REVELATION Tx system were narrower, more continuous, more linear, and more likely to be anchored to an anatomic structure than those created using a standard 7F RF ablation catheter.

1.2.2. NavAblator™

The NavAblator is a deflectable, single use, 4 electrode, ablation catheter designed for placement in the right atrium for the purpose of recording electrical signals, pacing, and creating lesions using RF energy with temperature feedback control. The NavAblator was developed to complete RF lesions at the isthmus region. Similar products such as the EPT Blazer and Cordis-Webster ablation catheters have been used in Phase I and Phase II to accomplish this task. The device is available with working lengths of 90 and 110 cm, and curve reaches of 30 and 40 mm.

Ablation studies were carried out in four dogs to specifically assess:

- The feasibility and safety using the NavAblator™ catheter for creating a continuous, transmural RF lesion across the isthmus between the tricuspid annulus and the inferior vena cava. (No comparison with other devices conducted here.)

- The ability of the NavAblator to record unipolar and bipolar electrograms and to compare the quality of recordings obtained with the study catheter to that obtained with the Cordis-Webster placed at a similar location across the isthmus.

- The ability of the NavAblator to pace the heart. Pacing threshold obtained with the study catheter was compared to the pacing threshold obtained with the Cordis-Webster catheter placed at a similar site.

In these studies, using the NavAblator, RF was delivered in a temperature control mode set at 60°C for 60 seconds. The number of RF applications at adjacent sites along the isthmus line ranged from 9 to 19 applications. There was no impedance rise during any of the RF deliveries and no coagulum was observed on the catheter tip following ablation.

On gross examination of the heart, the study Director, Dr. Mauricio Arruda (University of Chicago), noted that there was no pericardial effusion, perforation, thrombus or valvular damage in any of the four studied animals. A dark linear discoloration was present on the epicardial aspect of the heart as a result of ablation across the sub-Eustachian isthmus. This suggested full thickness of lesion across the isthmus. The endocardial aspect of all but one animal showed a complete linear lesion across the isthmus.

The linear RF lesions were sectioned longitudinally at the center of each lesion. Microscopic examination, obtained in 2 of the 4 animals, showed full thickness right atrial myocardial coagulation necrosis during inflammatory healing phase. In one of these lesions, microscopy confirmed the non-linear appearance observed on gross examination.

Electrogram recordings obtained with the NavAblator in two animals were found by Dr. Arruda to be of good quality, free of noise and looked similar to recordings obtained with the Cordis-Webster catheter. Pacing thresholds were low, less than 1 mA at 2.0 msec for both devices. This was evaluated in one animal.

These results, and the results from the bench study mentioned, support that the NavAblator will provide a sufficient lesion size to provide a clinically relevant block. No complications were noted by Dr. Arruda, and the initial failure of the distal electrode was identified, re-designed, and re-tested satisfactorily. Thus the device is considered to be safe for incorporating into a study.

2. Previous Clinical Experience With the REVELATION™ Tx

Results of completed Phase I and Phase II clinical feasibility studies with the REVELATION™ Tx Microcatheter System in the Us and the REVELATION™ in Europe indicate that using the microcatheter for RF ablation in the right atrium is safe and associated with a reduction in the frequency of symptomatic AF episodes. The REVELATION™ Tx catheter is a temperature sensing microcatheter used in the United States in a 10 patient Phase I and an 80 patient Phase II feasibility study. The REVELATION™ catheter used in a multi-center study in Europe is essentially the same as the REVELATION™ Tx without temperature sensing capabilities.

2.1. United States Experience with the REVELATION™ Tx

A Phase I ten (10) patient feasibility study was completed at three centers in the US with the REVELATION™ Tx Microcatheter System. Eligibility for enrollment was determined after a complete review of the patient's clinical history by the principal investigator and a thirty-day assessment of the patient's symptomatic episodes of AF. The consent was obtained from each patient. Prior to linear ablation with the REVELATION™ Tx Microcatheter System, standard electrophysiology mapping electrode catheters were placed in the heart. Baseline and post-ablation electrogram amplitudes and pacing thresholds were recorded.

The 10 treated subjects consisted of 8 males and 2 females ranging in age from 33 to 68 years experiencing multiple episodes of paroxysmal AF per month.

A Phase II, 38-subject feasibility study was conducted at ten institutions. Enrollment for the Phase II study is completed and closed. All 38 subjects in this study have reached their six-month follow-up visits.

Procedural success for Phase I subjects has already been reported at 100% (previous progress report) based upon both increased pacing thresholds and reductions in electrogram amplitudes. Due to the statistically significant ($p<0.001$) increase in pacing thresholds in Phase I subjects and initial Phase II subjects, it was determined to no longer require pre-pacing thresholds (because of the time required to obtain them during the procedure) in Phase II or Phase III. Consequently no additional data are available for this value.

Phase I results showed 40% to 70% of the study subjects with ≥50% reduction of AF episodes during the six month follow-up period (**Table 1**). There was a trend of continuing reductions over that interval, with the 1-month reduction range of 40%-100%, 6-month range of 71%-100%.

Table 1
Percent Reduction in Arrhythmic Episodes for Phase I Patients

Criterion	1 Month	3 Month	6 Month
# of subjects with Episode Reduction compared to Baseline	7/10 (70%)	7/10 (70%)	4/10 (40%)
≥50% Reduction	6/10 (67%)	7/10 (70%)	4/10 (40%)
<50% Reduction	4/10 (40%)	3/10 (30%)	6/10 (60%)
No Reduction	3/10 (30%)	3/10 (30%)	3/10 (30%)
Pacemaker Implantation	0/10	0/10	2/10 (20%)
Patient Non Compliance	0/10	0/10	1/10 (10%)

The vast majority of Phase II subjects (27 of 31, 87%) transmitted heartcard recordings that demonstrated a reduction in episode frequency from baseline in the first month after ablation. At six months, 100% of the subjects demonstrated reduction in symptomatic episodes. These results suggest continuing improvement (reduction in frequency of episodes) in these subjects over the six month period of follow up (**Table 2**).

Table 2
Reduction in Arrhythmic Episodes for Phase II Patients

Criterion	1 Month	3 Month	6 Month
# of subjects with Episode Reduction compared to Baseline	27/31 (87%)	29/31 (93.6%)	21/21 (100%)
≥50% Reduction	18/31 (58%)	23/31 (74.2%)	18/21 (86%)
<50% Reduction	9/31 (29%)	6/31 (19.4%)	3/21 (14%)
No Reduction	3/31 (10%)	1/31 (3%)	0/21 (0.0%)
Pacemaker Implantation	1/38	2/37	1/35
Patient Non Compliance*	4/37	4/36	11**/31

* *Failure to transmit heartcard data.*

** Data for one subject pending at the site.

2.2. European Clinical Experience With the REVELATION Tx™

Two ongoing independent studies are nearing completion in Europe. Data are available for the 74 patients treated with the REVELATION™ to evaluate the safety and performance of the catheter when used as indicated in patients with drug resistant AF. The first study described was a multi-center, prospective controlled study of 50 patients and the second prospective study included a total of 24 patients treated at a single institution under an Ethics Committee approved protocol.

The multi-center study results were analyzed for 50 subjects, 3 subjects were eliminated from the analysis. Two subjects were treated for atrial flutter and did not have atrial fibrillation. The remaining subject excluded from analysis was in AF at the time of the procedure and therefore did not meet the treatment criteria of normal sinus rhythm during RF ablation.

The REVELATION™ catheter was placed in the right atrium to pace and record clear signals. Creation of linear lesions was assessed by changes in electrode to tissue contact, specifically, increases in pacing thresholds and decreases in electrogram amplitude (Avitall, 1996). Results indicated an average two-fold increase in pacing thresholds with local electrograms decreasing an average of one-half after RF energy applications, suggesting achievement of effective continuous, transmural, linear lesions. The procedure was acutely successful in all patients; long term follow up continues.

At the six month follow-up, results indicated successful achievement of the secondary endpoints. Forty-Seven of the fifty subjects experienced an absence or reduction in the frequency and/or duration of any spontaneous episodes of AF following RF ablation. These data indicate that the effects described for ablation treatment translate into significant patient clinical benefit observed as a reduction in the frequency of arrhythmic episodes.

One patient (Subject 0201) experienced a brief seizure and respiratory arrest resulting in death 36 days after the study procedure. Follow-up medical examinations at one week post procedure revealed normal EKG, Holter, and transthoracic echocardiography. No autopsy was performed to determine the cause of death. The investigator could not attribute the death to the use of the device itself, the protocol, or medications. This death

appears to represent an isolated case. No other deaths or serious adverse events have been reported.

No device related adverse events have been reported. Effectiveness data from these additional patients are currently under review.

An independent prospective study conducted by Annibale S. Montenero, M.D., of Catholic University, Rome, treated 24 AF patients with the REVELATION™ catheter under an Ethics Committee approved protocol between July 1995 and February 1998. The patient population was divided into two subgroups. The first 15 patients (Group A) received two anatomically guided linear lesions while in sinus rhythm. Lesions were created 1) from the orifice of the superior vena cava (SVC) to the orifice of the (IVC) and 2) from the anterolateral mid-right atrium to the crista terminalis and behind the crista terminalis to the smooth atrium. The remaining 9 patients (Group B) received a third lesion placed at the subeustachian isthmus. Patients in Group B were treated during AF.

While the patients in Group A who were ablated with two linear ablation lines did well (66% elimination of AF or control with drugs), the results were markedly improved when the third line, that of the subeustachian isthmus, was created in Group B. In Group B, control of AF was 100% (28% required drugs to which they were refractory prior to ablation). Follow up periods of 10-34 months for Group A and 1-9 months for Group B indicate very good medium to long term results. There were no significant complications reported during the follow-up period ranging from 1 to 34 months.

There have been no adverse device effects reported in any patients. Effectiveness data from the additional patients are currently under review.

The purpose of the study proposed herein is to evaluate the safety and effectiveness of the Cardima® REVELATION™ TX Microcatheter for RF catheter ablation in the right atrium for patients with paroxysmal AF. The Cardima® REVELATION™ Tx is a linear array multi-electrode microcatheter system designed to produce continuous, linear, transmural lesions.

2.3. Additional Relevant Publications

2.3.1. Right-atrial Radiofrequency Ablation of Atrial Fibrillation

A number of publications in the past two years regarding the nature of AF has shed more light regarding the nature of this complex pathology. Experimental treatment using radiofrequency ablation (RFA) to simulate the Maze procedure has also increased. The rationale of the procedure is to increase the probability that multiple reentrant wavelets could be interrupted. Although a number of animal and human studies have indicated RFA should be considered in both atria (1-3), other studies suggest that some clinical forms of AF may do well from lone right-atrial RFA treatment. The benefits of lone right-atrial RFA treatment include lowered risk of thromboembolism and stroke, elimination of the risks attendant with trans-septal puncture, prevention of pulmonary vein stenosis, reduced amount of cardiac tissue ablated, shortened procedural time and shortened fluoroscopy time. The following represents a survey of the literature for those studies, albeit limited, that have shown success with sole right atrial therapy.

2.4. Animal Studies

Keane, et al. (4,5) used a chronically-paced AF goat model, in which lesions were placed from the superior to inferior vena cava, the coronary sinus and the tricuspid annulus. Atrial fibrillation was rendered non-inducible in 8 of 10 goats. Pathology and histology confirmed that linear transmural burns were achieved. The authors noted, however, that RFA in the right atrium alone was unable to terminate AF acutely without electrocardioversion when AF was three months duration in this model.

Kalman, et al. (6) found in a canine model that lesions in the right atria alone could prevent sustained AF, while in an additional 38%, left atrial lesions were also required. Lesions had been created from the superior tricuspid annulus to the crista terminalis, the infero-lateral tricuspid annulus to the crista, and the SVC to the IVC.

Tondo, et al. (7, 8) have found in a canine model for AF that RFA at the mid-atrial septum between the IVC and the fossa ovalis prevents AF as induced by rapid pacing in the normal heart.

In a Langendorff-perfused rabbit heart, Chorro, et al. (9) found that linear lesions in the right atrium at the IVC to tricuspid annulus, atrial appendage, and inferior free wall, reduced AF inducibility in the model used. The authors state that the mechanisms involved are the attenuation of the shortening in refractoriness and wavelength, and the conduction block towards the zones separated by the lesions.

2.5. Clinical Studies

The recent work of Haissaguerre, et al. (1-3) suggests that left atrial ablation will improve the probability for successful termination of some forms of AF. Nevertheless, even the results from their lab have shown successful treatment in about half of treated patients with RFA in the right atrium alone.

In a study enrolling patients with idiopathic “vagal AF,” while employing RFA in the right atrium alone, Gaita, et. al (10, 11) found 9 of 16 patients (56%) to be without AF recurrences during the follow-up period (about 11 months), and were considered to be successfully ablated. Four of these patients did not need to use drugs. These patients showed a significantly shorter mean atrial fibrillation intervals (FF) in the high septum and the low septum than in the high lateral wall and the low lateral wall. The septum had more irregular electrical activity with greater beat-to-beat changes in FF and a higher prevalence of type III AF than the lateral region. No major complications occurred in this study.

In a six patient study, Feld, et al. (12) created RFA lesions in areas of the posterior septum, anterior right atrium and tricuspid to IVC. Each patient was refractory to at least three anti-arrhythmic drugs, and were cardioverted to normal sinus rhythm before ablation. No complications were reported, and all patients were in sinus rhythm at discharge. Some patients were placed back on drugs. At follow-up (about 10 months) 5 patients were free of recurrent AF and 1 patient had only rare paroxysmal AF.

Natale, et al. (13, 14) enrolled 14 patients for right-atrial RFA that were refractory to drugs. Induction of AF was attempted before and after ablation. In seven patients an additional lesion was created either in the septum or in the Bachmann’s bundle region due to persistence of inducible AF. Acute success was achieved in all patients. After a follow-up period (18 ± 9 months) four patients had recurrence of AF, and another 4 patients experienced atrial flutter. Six patients remained in normal sinus rhythm

without medications and four required the use of drugs. Two patients had sporadic AF and two were in chronic AF. Recurrence occurred from 48 hours to 2 years after the procedure. Overall, control of AF was obtained with a right side only approach in nearly 70% of the patients.

Riccardi, et al. (15) evaluated the effectiveness and safety of right-sided ablation in twelve highly symptomatic, drug refractory patients with vagal idiopathic atrial fibrillation. Lesions were placed in three locations: 1) from the SVC to the fossa ovalis, and then to the IVC, 2) a transversal line from the fossa ovalis to the lateral edge of the tricuspid annulus, and 3) the IVC to tricuspid annulus isthmus. Atrial mapping in ten patients showed a regular rapid atrial activity (150-200 ms) in the lateral right atrium and in the left atrium while irregular disorganized and fragmented activity was present in the septal area. No major complications occurred during the procedure. In the follow-up period (4-12 months) six patients did not have recurrences of atrial fibrillation, three had atrial flutter and three had recurrences. The authors believe right sided ablation is a viable method for treatment of AF, and pose that some of the unsuccessful cases may be due to discontinuities of the line, or primary involvement of the left atrium.

Man, et al. (16) assessed right atrial ablation for idiopathic paroxysmal AF in twelve patients, refractory to anti-arrhythmic medication. The mean duration of AF was approximately six years and the frequency ≥ 2 episodes/week. AF was induced with burst pacing in six patients. Four horizontal lines were created using a 4 mm electrode catheter to separate the right atrium from the IVC, at the SVC, the isthmus, and the IVC anteriorly, and the coronary sinus os to the lateral right atrium posteriorly. Vertical lines were also applied to the crista terminalis and the medial aspects of the SVC and IVC, and along the intra-atrial septum. Sinus rhythm was restored in 4 of 12 patients after a mean of 51 applications and 5 linear lesions. No complications occurred during treatment. During follow-up (52 ± 25 days) 3 of 4 patients had a recurrence of paroxysmal atrial fibrillation, however three patients have had maintenance of sinus rhythm using medication. The authors conclude that in patients with idiopathic paroxysmal atrial fibrillation that right atrial catheter ablation is not effective, but may improve the response to pharmacologic therapy.

In an interesting study by Platonov, et al. (17), intra-atrial and inter-atrial conduction times were measured in patients with paroxysmal atrial fibrillation compared to a control group admitted for AVNRT ablation. Conduction times were measured between 1) the high lateral right atrium and distal coronary sinus, 2) the high lateral right atrium and proximal coronary sinus, and 3) the proximal and distal (i.e. left atrial) coronary sinus. The authors found significant differences in conduction times in test subjects as compared to controls in the first two areas of measurement. They conclude that their study reinforces the role of right atrial conduction disturbances and does not support primary left atrial involvement in the genesis of lone paroxsymal atrial fibrillation.

Montenero, et al. (18, 19) studied the effects of right atrial ablation using the Cardima REVELATION (non-temperature sensing) catheter in patients with drug refractory paroxysmal atrial fibrillation. Their method involves extensive mapping prior to ablation. In one group fifteen patients were treated using two lesions placed 1) from the IVC to the SVC, 2) a transverse lesion while in another group of five patients a third isthmus lesion was placed. In the follow-up period (1-25 months) 40% of patients treated with two lines had no recurrences while 27% had recurrences

controlled by drugs, and five (33%) had no benefit. In patients treated with three lines 3 (60%) had no recurrences, while the other two (40%) were controlled by drugs. The authors conclude using right sided linear ablation might represent a therapeutic option in some patients.

Montenero, et al. has recently provided detail in an expansion from their earlier work (20). Long term follow-up (20 ± 8 months) was made in both groups of patients as described above. The overall success rate for the first group (i.e., two lines) was 26% whereas the second group (i.e., three lines) the success rate was 55%. The authors state that their mapping method of selected ablation involves electrophysiological rather than anatomical-guided ablation. They found discrete atrial electrograms separated by an isoelectric baseline, with a continuous alternation between clockwise and counterclockwise activation along the trabeculated right atrium and roof. They speculate this activity might be explained by anisotropic conduction properties and anatomical barriers.

2.6. Conclusions

The number of studies of atrial fibrillation have increased in the past two years. Although the specific mechanism of the disease remains elusive, a number of cases have been shown to be successfully treated, as defined either by total elimination, or the facilitation of pharmacological control of atrial fibrillation. Some studies have shown left atrial involvement in the genesis and maintenance of atrial fibrillation, primarily in the region of the pulmonary veins, whereas others have been shown to be entirely effective without intervening in the left side. As noted above, there are benefits for limiting therapy to the right side. Stroke due to thromboembolism post ablation have been reported in the literature and needs to be vigorously avoided until adequate technology has been developed to address this issue.

Cardima believes that the examples as cited from the literature, both from animal models and clinical cases, supports the thesis that, in some patients, sole right-atrial ablation will prove to be an effective means to either eliminate or facilitate pharmacological control of atrial fibrillation.

2.7. Name of the Investigational Devices

- Cardima® REVELATION™ Tx Microcatheter System.
- Cardima® NavAblator™ Catheter

2.8. Intended Use of the Investigational Devices

The REVELATION™ Tx Microcatheter System is intended for use in cardiac electrophysiology procedures to map, pace, and create linear lesions in the right atrium in patients who have symptomatic paroxysmal AF.

The NavAblator™ catheter is intended in general for electrophysiology procedures to map, pace, and ablate in the right atrium in patients who have symptomatic paroxysmal AF. It specifically is intended as an optional device for ablation at the “cardiac isthmus”.

2.9. Goals and Objectives of the Investigation

Primary Objectives:

1) To evaluate whether subjects with drug refractory symptomatic paroxysmal AF treated with RF ablation using the REVELATION™ Tx, and optionally the NavAblator™, report an absence or reduction in the frequency of spontaneous episodes of symptomatic AF during the sixth month post procedure, while either maintained on the same anti-arrhythmic drug regimen or a reduced dosage.

2) To evaluate the safety of RF ablation in the right atrium using the REVELATION™ Tx, and optionally the NavAblator™, by measuring the incidence of adverse events reported during the study.

Secondary Objectives

1) To evaluate whether subjects demonstrate a clinically meaningful improvement in functionality as determined as of the sixth month after treatment by an improved quality of life: Medical Outcomes Trust SF-36 Health Survey, (Ware 1995) and AF Severity Scale (AFSS) (Maglio, 1998).

2.10. Duration and Extent of Investigation

A maximum of 128 patients recruited from up to 20 investigative sites will be enrolled in this study. Preliminary data from these patients will be submitted to the FDA to justify expansion of the study.

The total duration of the clinical trial is expected to be 12 months. This time period includes an estimated six months to recruit and treat subjects and six months of follow up after the treatment of the last enrolled subject.

All study subjects who undergo RF ablation with the REVELATION™ Tx Microcatheter system will be expected to return for follow-up evaluation for 12 months following the ablation procedure. Subject participation will involve pre-procedural (baseline) and intraprocedural evaluations as well as interval follow-up visits scheduled approximately 1 month (± 2 week), 3 months (± 2 weeks),6 months (± 4 weeks) and 12 months (± 4 weeks) following the procedure. The subject will be contacted by telephone two (2) years following the procedure.

2.11. PMA Application

A PMA Application will be based on follow-up results taken during baseline and the sixth month after treatment.

3. Clinical Protocol

3.1. Overview of Study

Study Devices:	Cardima® REVELATION™ Tx Microcatheter Cardima® NavAblator™ Catheter
Study Title:	Evaluation of Radiofrequency (RF) Ablation for AF in the Right Atrium
Protocol Number:	C97-103-AF
Clinical Phase:	Phase III
Study Design:	Multi-center, non-randomized, single group, treatment only study wherein patients serve as their own control
Number of Subjects:	• Enrollment up to 128 patients
Number of Study Centers:	• Total of 20 centers
Study Population:	• Drug refractory symptomatic paroxysmal AF • Male or female • Age 21 to 80 years
Treatment groups:	All subjects will undergo RF ablation in the right atrium with the REVELATION Tx™ Microcatheter, and optionally, with the NavAblator™.
Follow-up Schedule:	• 30-day baseline monitoring period observing at least three or more symptomatic AF episodes • RF catheter ablation procedure • Follow-up visits at 1, 3, 6 and 12 months post-procedure • 24 month telephone contact call
Primary Clinical Endpoints	• Frequency of symptomatic AF episodes • Incidence of Adverse Effects
Secondary Clinical Endpoint	• Quality of life
Procedural Endpoint	• Electrogram amplitude reduction

STUDY EVENTS

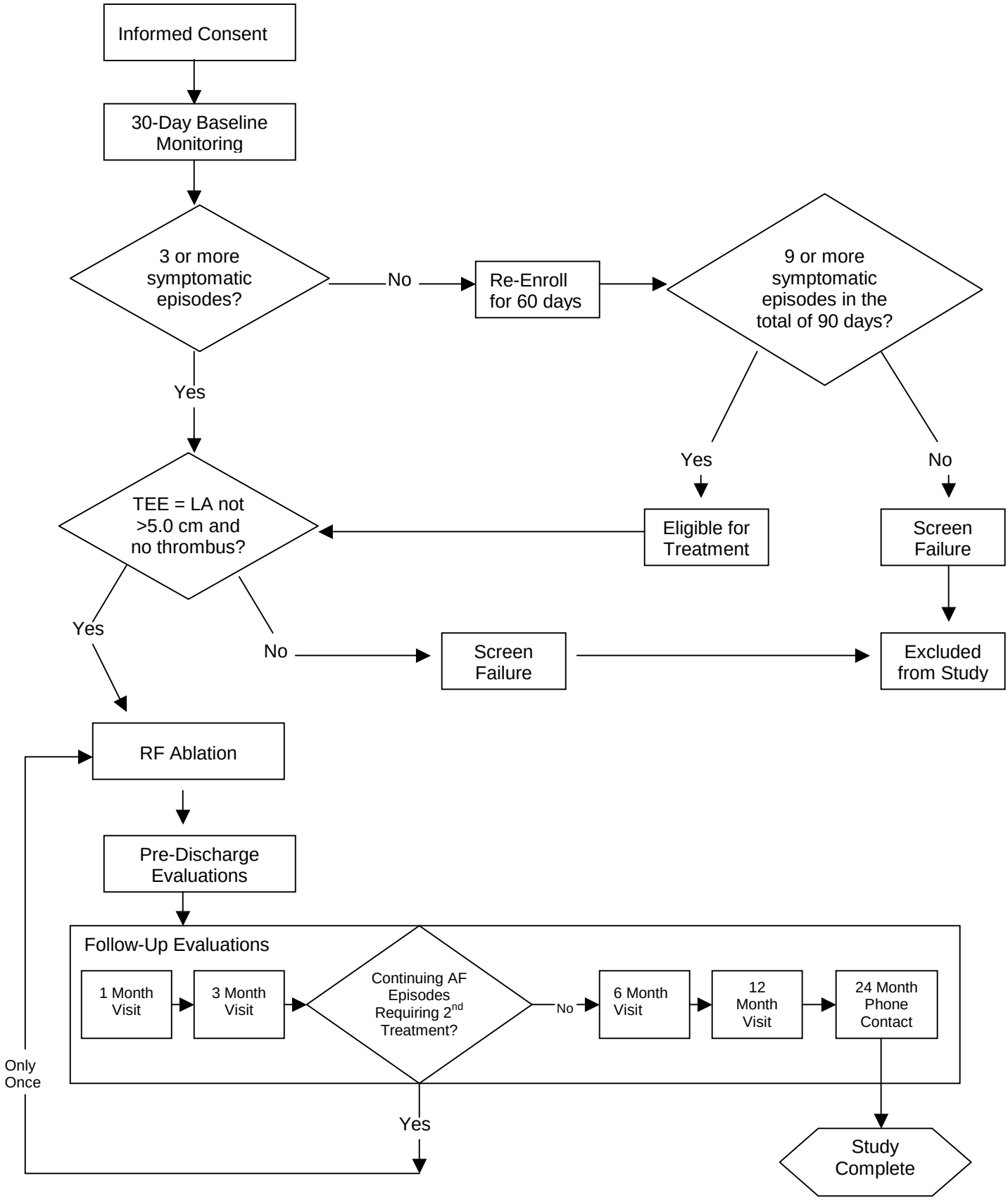

3.2. Number of Subjects

Up to 128 patients with drug-resistant symptomatic paroxysmal AF, who are determined to be eligible study participants, will be recruited and enrolled as subjects into this phase III study.

3.3. Source of Subjects

Subjects will be identified and recruited from inpatient and outpatient facilities affiliated with investigative sites selected to participate in this phase III study. All study subjects must be geographically accessible throughout the study, and willing and able to keep required follow-up appointments. For the purposes of patient enrollment and follow-up, patients will only be considered study subjects if they underwent RF ablation with the REVELATION™ Tx Microcatheter System.

3.4. Age and Sex of Study Subjects

Male and female patients between the ages 21 and 80 years will be recruited and enrolled into this pivotal study.

3.5. Inclusion/Exclusion Criteria

Inclusion Criteria:

1) Patient has documented symptomatic paroxysmal AF refractory to at least two anti-arrhythmic drugs. If Amiodarone is used first, then subject need only be refractory to Amiodarone and can be enrolled.
2) Patient has frequent, 3 or more, symptomatic episodes of AF including, but not limited to, palpitations, lightheadedness, fatigue, dyspnea and/or chest pain during the 30-day baseline period.
3) Patient is at least 21 years of age but not over 80 years of age.
4) Patient has provided written informed consent.
5) Patient is willing and able to comply with protocol requirements including the 30-day baseline monitoring period, follow-up visits at 1 month, 3 months, 6 months and 12 months and also a 24-month telephone contact call
6) Patient is in normal sinus rhythm at the time of the procedure or can be converted to normal sinus rhythm.

Exclusion Criteria:

1) Patient is pregnant.
2) Patient had a prior acute ablation failure within the previous two months.
3) Patient had a myocardial infarction within the previous six weeks.
4) Patient has a contraindication or an inability to comply with long-term anticoagulation therapy.
5) Patient has significant underlying structural heart disease (defined as valvular disease, presence of aneurysm or left ventricular hypertrophy) with a functional New York Heart Association Classification of Class III or IV.
6) Patient has a known or suspected coagulopathy.
7) Patient has a bleeding diathesis.
8) Patient has a history of prior cerebrovascular accident or transient ischemic attack within the previous six months.
9) Patient has an intra-cardiac thrombus.
10) Patient has echocardiographic evidence of a patent foramen ovale or atrial-septal defect.
11) Patient has a left atrial dimension > 5.0 cm.
12) Patient has a condition that, in the investigator's opinion, would place the patient at an increased risk for complications.

3.6. Enrollment Procedure

3.6.1. Patient Screening

A pre-study evaluation of each candidate will be conducted by the investigator. Pre-study information provided by the patient's cardiologist will be reviewed by the investigator to determine the patient's initial eligibility for study entry. Upon determining a patient's eligibility status, the patient will be offered the opportunity to participate in the study and the patient's initials will be entered into the study site's screening log.

If the patient agrees to be a participant in the study, the patient will be given an informed consent to read, sign, and date. The patient will be given the opportunity to discuss the procedure, risks, benefits, alternative therapies, and the study requirements with the investigator prior to signing the informed consent.

Patients will not be asked to sign an informed consent document until the study has been approved by the respective investigational site's Institutional Review Board (IRB) or equivalent, and the study sponsor has reviewed the approved Informed consent document. The investigator or the investigator's designee will inform all patients regarding the purpose of the study and expected duration, as well as the potential risks and benefits that may result from participation.

The patients shall be informed by the investigator or investigator's designee that they are free to refuse participation in this clinical study. If they elect to participate, it will be made clear that they may withdraw from the study at any time without prejudicing further care.

The patients will also be informed of alternative methods of treatment should they not wish to participate in the study. Patients who elect not to participate in this study have various treatment options available, including the following:

- Patients may undergo a palliative procedure to modify AV node conduction, maintaining the integrity of the AV node yet slowing ventricular response.
- Patients may undergo a palliative procedure of complete AV node ablation with subsequent implantation of a permanent pacemaker.
- Patients may remain on their current pharmacological therapy.
- Patients may undergo a surgical procedure, such as the maze or corridor procedure.

The patients will be informed by the investigator or the investigator's designee that their medical records will be subject to review by the sponsor, or its representative. This information will be used statistically during the analysis of the results of the clinical study, but the patients' identities will be treated as confidential. Patients will be assigned a unique study code that will not reveal the patients' identity, and this code will be used on all data and data collection forms during the study period.

Enrolled patients will be compensated twenty-five dollars ($25.00) for their inconvenience and incidental expenses for each follow up visit that requires completion of the Quality of Life questionnaires (3 month follow up visit and 6 month follow up visit) for a total of $50.00 compensation. Costs incurred related to clinical and diagnostic tests performed and the electrophysiology procedure will be billed to third party payers as appropriate.

A signed informed consent must be obtained from the patient or his/her legal representative by the investigator or the investigator's designee prior to a patient's involvement in the study. A copy of the consent form will be given to the subject. The original consent forms will be kept by the investigator and will be subject to review by the sponsor, or a representative of the sponsor, and by the appropriate regulatory body.

3.7. Cardiac Event Recorder

Following preliminary determination of eligibility, each patient will provide written informed consent and will be provided with a cardiac event recorder and instructed in its use. The cardiac event recorder is a portable, battery operated hand held electrocardiogram (ECG) recorder used for transtelephonic ECG monitoring. Each patient will be instructed to carry the event recorder for a baseline observation period of 30 days and record the ECG signal whenever symptoms of AF (i.e., palpitations, chest pain, shortness of breath, fatigue, and/or dizziness) are experienced. Also, it is required that all subjects transmit on their weekly transmission date even if they are asymptomatic.

3.8. Baseline Observation Period

In order to be considered eligible for the study, the patient must transmit a minimum of three (3) episodes of symptomatic AF using the cardiac event recorder in the 30-day baseline observation period. Patients will not be aware of the number of AF episodes required for enrollment.

Patients who fail the initial screening due to an insufficient number of documented episodes, may re-enroll immediately after their initial screening failure. The second screening period will be an additional 60 days (for a total of 90 days [includes the

original 30-day baseline screen period]). The patient must have a minimum of nine (9) episodes of AF in the expanded screening period. Patients may be re-screened one time only.

Eligible patients will be anti-coagulated per physician discretion. If the patient is anti-coagulated with Coumadin, the dose should be titrated to achieve a therapeutic international normalized ratio (INR) between 2.0 and 3.0.

Patients will be considered as study subjects only after meeting/achieving all entry criteria and completing ablation.

3.9. Baseline Evaluation

Prior to the procedure the patient will undergo a baseline evaluation consisting of the following examinations:

- Complete physical examination, including vital signs, weight and height
- Complete medical history, including cardiovascular risk factors, summary of previous cardiac interventions and summary of recent anti-arrhythmic therapies
- Complete history regarding the type, frequency, and severity of arrhythmia symptoms, prescribed medications and hospitalizations or emergency department visits during the sixth (6) month period prior to enrollment into the study.
- Tabulation of the frequency of spontaneous AF episodes recorded and/or documented during the baseline observation period.
- Determination of New York Heart Association (NYHA) functional class according to the following criteria:

  Class I: Patients with no limitation of activities; they suffer no symptoms from ordinary activity.

  Class II: Patients with slight limitation of activity; they are comfortable at rest or with slight exertion.

  Class III: Patients with marked limitation of activity; they are comfortable only at rest.

  Class IV: Patients at complete rest, confined to a bed or chair; any physical activity brings on discomfort and symptoms occur at rest.
- PT/PTT, INR
- Stress test
- 12 lead electrocardiogram
- Quality of Life questionnaires: Medical Outcomes Trust SF-36 and the Atrial Fibrillation Severity Scale (AFSS).

In addition to the above, a transesophageal echocardiogram (TEE) will be performed within 48 hours of the procedure to determine patient eligibility for the procedure and to rule out intracardiac thrombus. A urine or serum pregnancy test will be performed within 24 hours prior to the scheduled procedure or according to institutional practice. A complete listing of the schedule of clinical assessment is outlined in **Table 3**.

Upon completion of the baseline evaluation, the investigator will determine whether the patient is considered eligible for study entry. Patients failing screening will be tabulated by reason and recorded on the screening log.

Table 3

Schedule of Assessments

Evaluation of the Cardima® REVELATION Tx™ System for Right Atrial Mapping and Ablation

Examination	Baseline	Procedural Measurements	Prior to hospital discharge	Month 1 (± 2 weeks)	Month 3 (± 2 weeks)	Month 6 (± 4 weeks)	Month 12 (± 4 weeks)	Month 24 (± 6 weeks)
Medical History	X							
Physical Examination	X		X	X	X	X	X	
Stress test	X				X			
12 Lead EKG	X		X	X	X	X		
Transesophageal Echocardiogram	X							
Transthoracic Echocardiogram			X		X			
PT/PTT INR	X		X	X	X			
Activated Clotting Time		X						
Medication Review	X		X	X	X	X	X	X
Arrhythmia Events	X			X	X	X	X	X
Adverse Events			X	X	X	X	X	X
Quality of Life Questionnaires	X				X	X		
Urine or Serum Pregnancy Test (if applicable)	X							
Cardiac Event Monitor	X		X	X	X	X		
Telephone Interview								X

3.10. Study Procedure

3.10.1. Patient Preparation

1) If subject on Coumadin, discontinue three (3) days prior to the procedure. Heparin or low molecular weight heparin may be administered one (1) day prior to the procedure at the discretion of the investigator. At the time of the procedure the INR should be <1.8.
2) Once the subject has been brought to the electrophysiology laboratory, attach the RF generator ground patch securely to the subject's skin with a sufficient quantity of conductive gel. Attach electrocardiogram monitoring equipment to the patient using standard hospital procedure and prepare the patient in the usual fashion using sterile technique.
3) Place an introducer sheath that will accommodate the outer diameter of the Cardima™ Naviport 8F guide in the Femoral and/or Jugular Vein.
4) Place other introducer sheaths as deemed necessary by the investigator.
5) Obtain a baseline activated clotting time (ACT) value. Administer a bolus of intravenous heparin and infuse heparin continuously throughout the procedure to maintain an ACT of approximately 200 to 300 seconds. Take ACT measurements at 30 minute intervals until therapeutic levels are achieved. Thereafter, maintain therapeutic levels per standard hospital procedure. Adjust heparin according to the ACT values.
6) Place standard diagnostic EP catheters as necessary.

3.10.2. Pre-Procedure Diagnostic Assessment

Perform standard mapping procedures according to routine practice. Record Atrial-His intervals.

3.10.3. REVELATION™ Tx System Setup (see Figure 1)

1) Connect the Cardima™ Switchbox to the Cardima™ Connecting Cable and the RF generator per the Switchbox Instructions For Use.

2) Connect the guiding catheter.

Note: *The Naviport Deflectable Tip Guiding Catheter will be made available to the physicians as part of this investigation. The Cardima™ Naviport guiding catheter is available in 10 mm, 30 mm, 40 mm, 50 mm and 60 mm curve reach and is recommended for placing the REVELATION™ Tx in all trajectories. The Cardima™ Naviport guiding catheter with a 10 mm curve reach is recommended for the isthmus trajectory. If the Naviport is not optimal for a particular patient or position, other guiding catheters may be chosen at the discretion of the physician. The guiding catheter(s) used to place the REVELATION™ Tx at each trajectory will be recorded. In addition, the Cardima™ NavAblator™ will be available for isthmus ablation. This catheter should be used before any non-investigational device is used.*

a) Select the Naviport or an appropriate guide with an inner diameter of 0.065" (5 F) or larger.

b) Connect a Rotating Hemostatic Valve (RHV) or Tuohy-Borst type adapter to the guiding catheter hub.

c) Connect a pressurized heparinized saline flush bag to the side arm of the RHV with a 3 way stopcock. Maintain a continuous drip.

d) Flush the guiding catheter and introduce an appropriate size angiographic spring guidewire (e.g., 0.038") into the guiding catheter to straighten the tip curvature. If using the Naviport guiding catheter, straighten the curve using the handle.

3) Prepare the Cardima® REVELATION™ Tx catheter for use.

a) Inspect packaging for damage. Open and place catheter protective coil on a sterile field.

b) Flush the catheter with a saline/heparin solution while it is still in its protective coil.

c) Remove catheter from coil and inspect for integrity.

Figure 1: Cardima® REVELATION™ Tx Microcatheter System

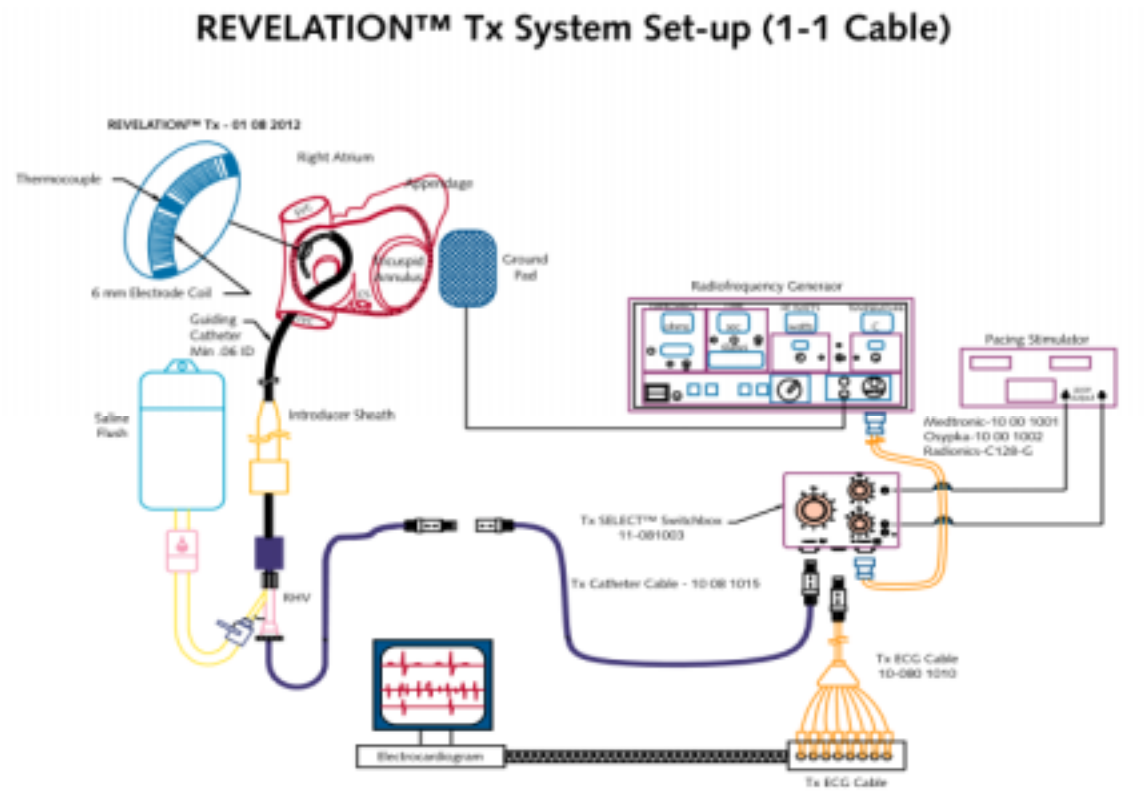

3.10.4. Right Atrium Access

1) Place the guiding catheter/guidewire assembly through the introducer sheath and advance to the targeted area in the right atrium under fluoroscopic guidance.

2) Remove the angiographic guidewire from the conventional guiding catheter.

3) Introduce a peel-away introducer into the RHV if desired and advance the REVELATION™ Tx through the introducer into the guiding catheter. Remove the peel-away introducer and discard.

4) Place the REVELATION™ Tx at the targeted area under fluoroscopic guidance and then connect to the connecting cable (yellow connector).

3.10.5. Trajectories for RF Applications

Apply RF along three (3) trajectories (posterolateral, posteroseptal and along the isthmus) a fourth trajectory (anterior) may be included at the option of the investigator. These trajectories are described in more detail below and illustrated in **Figure 2**.

1) Inferior vena cava (IVC) to the superior vena cava (SVC) posterolaterally (RAO view)

2) SVC to the IVC posteroseptally (RAO and LAO views)

3) Isthmus line, IVC to the tricuspid annulus (TA) isthmus (RAO view)

Care should be taken to avoid ablation of the AV node, SA node or creation of SA nodal isolation.

Each trajectory can be achieved by more than one approach. Each investigator will use the one which he/she finds to be most effective and may vary the approach according to the individual patient's right atrial anatomy.

Isthmus Line (IVC to TA)

The following procedure is recommended for creating the isthmus trajectory:

1) Advance the catheter so that the tip is near the os of the guide, but does not extend beyond the os.

2) Advance the guide and catheter assembly through the tricuspid valve into the right ventricle; advance the catheter to expose up to 3 catheter electrodes beyond the os of the guide; deflect the Naviport guide as needed.

3) Verify that the electrograms from the exposed electrodes consist mainly of ventricular signals.

4) Increase the deflection of the guide to a more acute angle to obtain firmer contact between the exposed electrodes and the endocardium.

5) Withdraw the guide and catheter assembly until the electrograms from the more proximal exposed electrodes consist of mainly atrial signals.

6) Evaluate electrogram sharpness, electrogram amplitude, and pacing to confirm good electrode contact with the endocardium.

7) Ablate through 1 or 2 of the exposed electrodes once good contact has been established. The os of the guide can be used to apply pressure to obtain firm contact with the atrial endocardium, using the os of the guide to force these electrodes into firm contact with the endocardium.

8) Withdraw the guide catheter slightly to expose 1 or 2 more electrodes, again using the os of the guide to force these electrodes into firm contact with the endocardium. Ablate through 1 or 2 of the exposed electrodes.

9) Repeat this process as required to complete the isthmus trajectory.

10) Conduction block may be verified using coronary sinus pacing while recording with a multipolar catheter deployed in the right atrium.

Note: The NavAblator™ catheter is optionally available for ablation of the isthmus only after first attempting to create a linear burn with the REVELATION Tx. An alternate line may be made from the CS to the TA provided conduction block can be shown to naturally exist along the eustacian ridge from the IVC to the CS. Additional RF delivery between the eustacian ridge and the TA may also be performed if necessary to insure conduction block. If bi-directional conduction block cannot be obtained with the above procedure, the physician should complete the isthmus trajectory using standard institutional procedures.

Figure 2: Trajectories for RF Lesions

REVELATION TX Use:
Mapping / Ablation lines

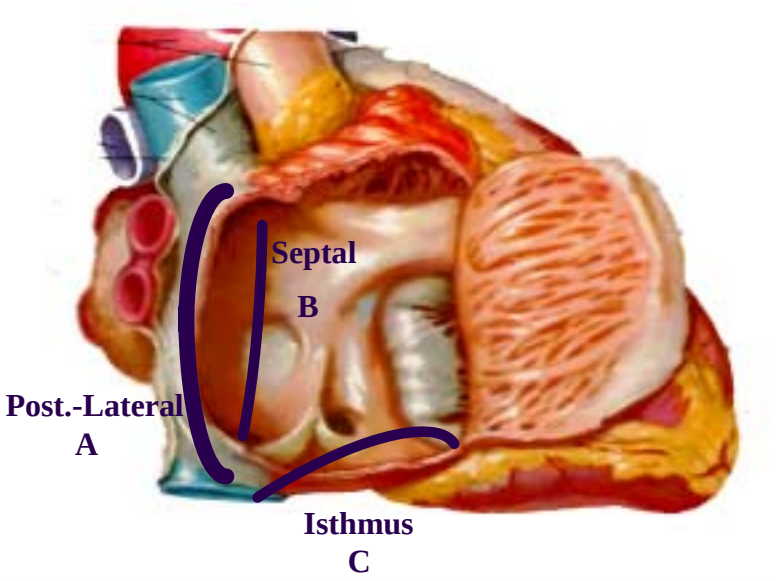

3.10.6. Determination of Catheter/Tissue Contact

1) Observe the catheter on the fluoroscope to confirm correct positioning.
2) Record bipolar electrical signals from the electrode catheter. In general, sharp electrograms with high frequency components and large relative amplitudes indicate good contact.
3) Obtain bipolar pacing thresholds from the REVELATION™ Tx electrode catheter while the patient is in sinus rhythm. Connect the pacing stimulator to two adjacent electrodes and determine the bipolar pacing threshold. In general, unless the electrodes are in the Superior or Inferior Vena Cava, pacing thresholds of less than 5.0 mA indicate adequate tissue contact of both electrodes in the pair.
4) To avoid possible damage to the phrenic nerve with RF energy, after a pacing threshold has been established, the investigator should pace at a high output (suggested 10 mA at 0.5 msec pulse width) while checking for diaphragmatic stimulation. This is especially important at the posterolateral (IVC to SVC) and anterior (SVC to TA) positions. If stimulation of the phrenic nerve exists, the catheter should be repositioned and high output pacing repeated.

3.10.7. RF Energy Delivery using the REVELATION™ Tx

1) Determine which electrodes will receive RF energy based on the tissue contact assessment. Energy will be delivered to each electrode individually.

   Follow the instructions for use to turn on the RF generator. Configure the RF generator settings as follows:

Control Mode:	**Constant Temperature**
Set Temperature:	Initially 50 °C
Maximum Power:	Recommend 35 W (max = 50W)
Impedance:	Max = 200 Ω
Impedance Differential:	Switch on. Adjust to 20 Ω.
Timer Set:	60 seconds

   These settings enable the RF generator to deliver power up to 50 W to maintain the catheter thermocouple temperature at 50°C during the course of the burn. RF energy will shutoff automatically after 60 seconds unless the impedance rises by more than 20 Ω from the minimum value in which case the shutoff will occur immediately.

2) Set the switchbox to correspond with the electrode selected for delivering energy.
3) If RF energy delivery automatically terminates (due to a change of impedance) before the 60 second set time, the impedance differential may be increased to 20 Ω at the physician's discretion and RF energy delivery resumed through the same electrode. Continue RF ablation with the next electrodes in line and complete the entire sequence of the burn line. Then move the catheter to overlap the "gap". At the completion of the burn line, remove the REVELATION™ Tx and inspect. When inspecting the catheter, note any thrombus or coagulum on the electrodes. Loosely adherent thrombus may be carefully cleaned off the catheter electrodes with saline. Do not apply force to the tip coil when wiping the electrodes. If strongly adherent

coagulum is not easily wiped off, or if any damage is suspected, use another REVELATION™ Tx catheter.

4) Repeat RF energy delivery (2.4.8) for the remaining electrodes with sufficient tissue contact.

5) Repeat the determination of catheter/tissue contact steps (2.4.7) to assess changes that have occurred as a result of the RF energy application. Repeat RF energy applications along a given trajectory as necessary. The set temperatures may be increased to a maximum of 55 °C at the physician's discretion.

6) Reposition the catheter in the next desired location and repeat the determination of catheter and tissue contact and the delivery of RF energy as outlined above until RF lesions are created in all desired trajectories.

3.10.8. RF Energy Delivery using the NavAblator™

1) Refer to the NavAblator Instructions for Use for specific details.
2) Ablation is conducted using the number 1 electrode only. Observe instructions for setting the switchbox to this position when ablating.
3) A set temperature of 60 °C is recommended for isthmus ablations, up to 120 seconds.

3.11. Assessments

3.11.1. Procedural Assessments

The following evaluations will be performed for all subjects during and immediately following the study procedure:

- Determination of number and location of RF ablation lines;
- For each automatic shut-off of the generator, the following information will be recorded: the mode of the shut-off; whether the catheter was removed and cleaned, and whether the electrodes were coated with coagulum;
- Assessment of intracardiac electrocardiograms;
- Adverse events as required;
- Activated Clotting Times.

3.11.2. Post-procedural Assessments

Pre-Hospital Discharge

Following the procedure, the subject will be monitored overnight in the hospital. Coumadin therapy may be resumed per physician discretion and appropriate anticoagulation therapies will be initiated (a heparin drip may be started or low molecular weight heparin provided until therapeutic anticoagulation levels are achieved). The physician will regulate the dosage of Coumadin to achieve an INR value of 2.0 to 3.0. INR tests will be performed per the routine practice at each institution. The subject should remain on Coumadin at the physician's discretion.

Prior to hospital discharge, subjects will undergo a transthoracic echocardiographic assessment within 24 hours following the procedure to evaluate the presence of intracardiac thrombus or pericardial effusion. Subjects will also have a 12 lead EKG prior to hospital discharge. Following discharge, the subjects will be instructed to continue to use their cardiac event monitor for one through three months and the sixth

month follow up period. For subject convenience, the monitor may be used from one through six months continuously.

Subjects will be expected to continue their current anti-arrhythmic medication regimen for a minimum of three months following the ablation procedure.

3.11.3. Follow-up Assessments

Subjects will return for follow-up evaluations for 12 months after their ablation procedure. Subjects will be instructed to continue to use the cardiac event monitor during the sixth-month follow up period. The patient's anti-arrhythmic medication regimen should remain unchanged at least until the three-month follow up visit unless the physician determines it is in the subject's best interest to modify or discontinue the medication regimen.

Optional Second Treatment

If a subject demonstrates no reduction or an increase in symptomatic episodes of AF within three months following the initial procedure, the subject is eligible to receive a second procedure within 6 months of the initial treatment. Subjects may receive a maximum of one additional procedure during this timeframe.

For follow-up purposes, when a subject is re-ablated, the subject will get a new identifier for the duration of the study. Follow-up for these patients will start with the second ablation procedure and will proceed to the 24 – month FU telephone contact. To be eligible for a second ablation, there must be no contraindication and the subject must still meet all original eligibility criteria except frequency of AF episodes.

Anti-coagulation therapy may be discontinued at the three month visit at the discretion of the investigator based on the subject's condition and results of the transthoracic echocardiogram.

The scheduled Follow-Up evaluations are summarized in Table 4.

Table 4
Follow-Up Assessments Post-Ablation

Assessment	1 Mos	3 Mos	6 Mos	12 Mos
• Complete physical exam including blood pressure, pulse, height and weight	X	X	X	X
• Review of transtelephonic event transmissions	X	X	X	
• Review of Adverse events	X	X	X	X
• Review of prescribed medications	X	X	X	X
• Documentation of hospitalizations or emergency room visits since the ablation procedure	X	X	X	X
• Arrhythmia Review	X	X	X	X
• Determination and documentation of the New York Heart Association Classification status	X	X	X	X
• 12 lead electrocardiogram.	X	X	X	
• PT & INR assessments*	X	X		
• Stress Test		X		
• TTE		X		
• Quality of Life Questionnaires		X	X	

If the subject remains on Coumadin at subsequent follow up visits, the investigator will obtain PT and INR values per institutional protocol.

In addition to the follow-up visits, the subject will be contacted by telephone 24 months following the ablation procedure to establish changes in the patient's status (i.e., number of episodes of AF, number of visits to the emergency room, number of days of hospitalization, changes in medications, etc.) and to determine the incidence of any adverse events.

3.11.4. Adverse Effects

Any and all complications/adverse effects that occur during the course of this study will be recorded. Data to be collected will include the nature of the complication or adverse effect, onset and resolution dates and time (or whether the complication is ongoing), severity, management, outcome, and documentation of device involvement. Complications will be tabulated as "major" or "minor" per the FDA definition (see Section 5). From these data rates of major and minor complications will be determined. In addition, the number of anticipated and unanticipated adverse effects that occur in the study population will be tabulated and summarized. The incidence of all types of complications and adverse effects will be reviewed during the course of the study for any indications that use of the investigational device confers any unanticipated significant risk.

3.11.5. Anticipated Adverse Effects

Possible adverse effects that may be anticipated in association with the investigational devices and procedure are listed below by likely category of complication:

Major Adverse Effects (may be considered either device or procedure-related):

- Death
- Myocardial infarction
- Stroke
- Valve or cardiac structure damage
- Atrio-ventricular block possibly requiring a permanent pacemaker
- Sino-atrial block possibly requiring a permanent pacemaker
- Thromboembolism
- Pulmonary embolus
- Endocarditis
- Cardiac perforation and/or resulting hemopericardium and/or tamponade
- Nerve damage
- Pneumothorax
- Arrhythmias, possibly requiring drugs and/or DC cardioversion
- Phrenic nerve injury

Minor Adverse Effects (may be considered either device or procedure-related):

- Infection
- Bleeding
- Femoral arteriovenous fistula[1] Femoral artery injury
- Pericardial effusion

Other Complications **(**not considered device or procedure-related**)**:

- Drug reactions

[1] (Because this is a predictable adverse event for this type of procedure, *even if hospitalization is required to repair,* this event will be classified as minor)

In the event that a patient requires significant intervention (e.g., blood transfusion, surgery) in response to an adverse effect it will be considered a major complication.

3.11.6. Criteria for Measuring Effectiveness

3.11.6.1. Method of Evaluation

The assessment of the effectiveness of the REVELATION™ Tx and the NavAblator™ in the treatment of AF will be based on the following endpoints:

The procedural endpoint of this study is:

Electrogram amplitudes post-ablation relative to pre-ablation

The primary clinical endpoints are:

1) Frequency of any spontaneous symptomatic episodes of AF experienced by subjects
2) Incidence of adverse effects

The secondary clinical endpoint is:

Quality of life based on the SF-36 and symptoms and severity based on the AFSS

Procedural Success:

The procedural effectiveness of the REVELATION™ Tx will be established based on achieving the following outcome:

Demonstration of at least one of the following conditions at the line(s) of ablation during sinus rhythm: a) reduction in the amplitude, fragmentation or widening of local electrograms; b) appearance of split potentials; or, c) increase in pacing threshold

Clinical (Patient) Success:

The clinical effectiveness of ablation with the REVELATION™ Tx will be established based on achieving the following outcome by the sixth-month of follow-up:

1) Reduction of frequency of symptomatic episodes of paroxysmal AF as compared to the frequency of symptomatic episodes pre-procedure with or without medication therapy

2) Improvement in the quality of life as measured by the SF-36 and the AFSS

4. Data Analysis and Reporting

Case Report Forms will be used to record demographic, procedural and follow-up data, as well as any adverse clinical effects or complications which may occur during the study period. Data to be evaluated will include baseline and post-procedure event monitor recordings, spontaneous episodes of AF (frequency, and severity), EKG and echocardiograms and a summary of any complications or adverse events. Cardima shall review all clinical data on the case report forms to assure that the information is complete and accurate.

The adverse events and incidence of morbidity and mortality will be reviewed with the clinical investigators to assess the safety of the device and the procedure. Complications will be assessed as minor or major per the FDA definition as described in the text box on the following page. Using these definitions rates of major and minor complications will be calculated and reported in the results. Attempts will be made to ascribe these events as procedural (e.g., catheterization), non-procedural (e.g., cancer) or device therapy related.

The FDA Definition of Major and Minor Complication (from *Recommended Clinical Study Design for Ventricular Tachycardia Ablation CDRH/ODE May 7, 1999)*

Major complication: An adverse event that occurs within the first week following the investigational procedure; AND:

- is life-threatening; or
- results in permanent impairment of a body function or permanent damage to a body structure; or
- necessitates significant intervention, such as major surgery, to prevent permanent impairment of a body function or permanent damage to a body structure; or
- requires hospitalization or an extended hospital stay; or
- results in moderate transient impairment of a body function or transient damage to a body structure; or
- requires intervention such as medication or cardioversion to prevent permanent impairment of a body function or damage to a body structure.

Minor complication: An adverse event which results in minimal transient impairment of a body function or damage to a body structure, or which does not require any intervention other than monitoring.

In addition, a Data and Safety Monitoring Board (DSMB) will be organized to act in an advisory capacity to Cardima. The board will be comprised of individuals trained in electrophysiology, general cardiology and/or statistics. A DSMB chairperson will be selected, who will call meetings when deemed appropriate. The primary focus of the DSMB will be to monitor on-going study data for any issues that might compromise

patient safety. A Standard Operating Procedure will be written to help guide activities of the Board.

4.1. Quality Assurance of the Data

Subject case report forms will be collected and reviewed for completeness and accuracy as well as for any evidence suggesting subject risk. Where any discrepancies are noted, they will be resolved with the investigator and/or an individual designated by the investigator. Where the data are incomplete, attempts will be made to obtain the missing data.

Data Management and Preparation

All data included in the case report forms (CRFs) will be entered in a database designed specifically for this study. Accuracy of data entry will be assessed by the blind double entry procedure. Per internal standard operating procedures of our data management resource, 10% of all original crfs entered into the system will undergo a 100% comparison against what was originally entered into the database through the double key entry process. The crfs will then be date stamped as verified. This independent data comparison is conducted as well as following data edit checks per the Cardima Data Management/Data Quality Plan.

An additional task to assure good quality data is to examine the data statistically to detect gross errors that may have entered the data through the data recording or entry process. This preliminary data examination will include the following:

- Univariate frequency distributions and/or descriptive statistics (mean, quartiles, min, max, SD) will be computed for all variables.

- The minimum and maximum values (or frequency distributions) will be inspected for suspicious or unacceptable values and corrections will be made to the data as necessary.

These steps will confirm that the data are in order and acceptable for further analysis, provide a preliminary overview of the results, and reduce the risk of having to repeat costly analyses.

4.2. Justification of Sample Size

The sample size of 80 completed subjects for the Phase III study is based on using confidence intervals to present clinical success rates. This Phase III study sample size will provide clinically relevant and acceptable margins of error for the purpose of statistically characterizing the clinical effectiveness rate employing confidence interval estimation.

The following illustration of the adequacy of our sample size is based on 80 subjects with clinical success determinations during the sixth month follow up. Below is a table showing 95% confidence intervals for various possible clinical success rates. Included are the associated standard errors to show the range of values of estimates and margins of errors associated with the proposed sample size for these three possible success rates.

95% Confidence Intervals (Upper and Lower Limits(U, L)) and Standard Errors (SE) for Three Potential Clinical Success Rates

Success Rates

	0.40			0.50			0.70		
n	L	U	SE	L	U	SE	L	U	SE
80	0.29	0.51	0.055	0.39	0.61	0.056	0.60	0.80	0.051

The above confidence intervals and standard errors were determined using the normal approximation to the binomial distribution. To accommodate for failure of baseline episode frequency screening (20%), and loss to follow up (10%),, a total of 128 patients will be enrolled to achieve 80 subjects with determinations for clinical success based on the 6 month follow-up episode frequency or previous election of pacemaker implantation. Note that for the purpose of estimating the overall success rate for the six month interval, subjects electing to receive implantable pacemakers prior to the sixth month follow-up will be considered failures.

Definition of Clinical Success

The definition of clinical success is based on an inverse scale of percentage episode reduction in episodes versus baseline level of number of episodes, i.e., decreasing percentage reductions with higher baseline severity (number of episodes per month), which is clinically meaningful in terms of patient benefit. This sliding scale of success is defined in the following table:

Baseline number of episodes	Percent Reduction	Range of fewer episodes
3 – 4	75	3 – 4
5 +	50	3 +

Note that a person with 3 episodes per month at baseline would have to be episode free during the sixth month to be a success, but a person with 4 episodes at baseline would be successful if he/she experienced one or none during the sixth month.

4.3. Statistical Analysis

The subjects enrolled in the study will be statistically characterized for baseline and intra-operative variables using descriptive statistics (mean, median, standard deviation, etc.) for continuous factors such as age, and by frequency and percentage distributions for categorical factors such as gender and NYHA class.

The effectiveness of treatment will be evaluated by comparing the effectiveness outcomes during the six month of follow-up to their baseline values for each individual subject. Subjects electing to receive Implantable pacemakers prior to the six month follow-up will be considered failures. Confidence intervals will be utilized to statistically describe changes for relatively continuous outcomes such as the average number of symptomatic arrhythmic episodes per month and procedural outcomes such as change in amplitude. There are no categorical outcomes in this study to be compared pre- and post-treatment.

All primary and secondary treatment effectiveness outcomes will be compared to established baseline values and also presented by investigational site. All adverse events will also be presented by investigational site.

Subjects who require a second procedure will undergo follow up evaluations for six months after the date of the second procedure at intervals in accordance with the protocol. These subjects will only contribute effectiveness data for the period after the second procedure, but they will contribute safety and procedural data for both procedures. If warranted for these subjects, procedural results for the first versus second procedure will be compared statistically using the paired t-test. Numbers permitting, characteristics of these subjects will also be compared statistically to subjects who require one procedure to determine if there are any factors, which might predispose a patient to requiring a second procedure. Reasons for second procedures will be summarized statistically with frequency and percentage distributions.

All effectiveness outcomes will be presented separately for important subgroups of subjects defined by factors such as gender, baseline QOL, number of procedures and level of frequency of episodes. These and other potentially prognostic factors will be evaluated as possible effect modifiers, i.e., factors which modify procedural effects, using multivariate statistical methods such as multiple logistic regression and stepwise multiple regression.

Graphical methods such as Box and Whisker charts and scatterplots may also be employed to depict study results.

4.4. Methods to Eliminate Bias

The SF-36 QOL instrument has been validated, and is recognized to be a valid scientific instrument for measuring general aspects of quality of life. The AFSS will be employed to evaluate symptom severity in this patient group.

This study features patients serving as their own controls, thus eliminating the opportunity of study group imbalances (assignment bias) for prognostic factors.

Electrogram amplitude is considered an objective measure. Intra-procedure electrograms will be printed on recording paper with calibration marks and sent to a single core laboratory for determination of pre- and post-ablation amplitudes. The core laboratory review will be blinded to the subject identity, site, and whether the electrogram was obtained pre- or post-ablation.

For both baseline and the sixth month follow-up interval, the number of symptomatic episodes of paroxysmal atrial fibrillation will be based on subject recordings provided by the event recorder.

4.5. Study Termination

Subjects will be advised that they may voluntarily withdraw from the study at any time and will be instructed to notify the investigator immediately. Subjects may choose to withdraw for any reason and are not obligated to reveal their reason(s) for withdrawal.

Any study subject who does not return for a scheduled follow-up evaluation will be contacted by telephone to determine the cause for the missed appointment. If the study

subject wishes to withdraw from the study, the reason(s) for discontinuation will be recorded in the subject's chart and on the appropriate case report form .

5. Risk Analysis

The investigational study of the Cardima® REVELATION™ Tx Microcatheter System was designed to assure that the benefits and knowledge gained about the investigational device outweigh the potential risks to the study subjects.

5.1.1. Potential Risks to Study Subjects

Risks to subjects enrolled in this study include all those risks currently associated with all electrophysiology diagnostic procedures and radiofrequency catheter ablation procedures. The risks of the procedure are related primarily to mechanical injury to the heart and vessels from catheter manipulation and thermal injury due to RF current delivery, including the risk of thromboembolism and myocardial infarction. The standard risks of anesthesia also exist and include allergic reactions, medical complications and death. Risks of the procedure are characterized by category as follows:

Major Complications (may be considered either device or procedure-related):

- Arterial embolization
- Arrhythmias, possibly requiring drugs and/or DC cardioversion
- Atrioventricular block or nodal dysfunction possibly requiring a permanent pacemaker
- Cardiac perforation and/or resulting hemopericardium and/or tamponade
- Death
- Emergent thoracotomy
- Endocarditis
- Myocardial infarction
- Nerve damage
- Pneumothorax
- Sino-atrial block: sinus pauses requiring a permanent pacemaker
- Stroke
- Thromboembolism/pulmonary embolism
- Valve or cardiac structure damage

Minor Complications (may be considered either device or procedure related):

- Bleeding
- Femoral arteriovenous fistula (if event results in an extended hospital stay, AE will be deemed an SAE)
- Femoral artery injury
- Infection
- Pericardial effusion

Other Complications (not considered device or procedure-related):

- Drug reactions

In the event that a patient requires significant intervention (e.g., blood transfusion, surgery) in response to an adverse effect it will be considered a major complication.

Risks considered in detail below take into account the likelihood of occurrence as well as the degree of severity. Methods to reduce the likelihood of occurrence are discussed below:

Major Complications

Arterial Embolization - Over-heating of tissue by radiofrequency energy may cause thrombus or/and gas bubble formation that may be deleterious to a patient, particularly when thromboemboli can enter the coronary or cerebral circulation. Labeling will caution the user not to use the device in the left atrium.

Arrhythmias - Arrhythmias may occur when manipulating devices in the heart. These mechanically induced arrhythmias typically self terminate upon further manipulation of the catheter. The EP lab and personnel are well-trained to handle the occurrence of sustained arrhythmias using pace-termination, medication or cardioversion.

Atrio-ventricular block or nodal dysfunction possibly requiring a permanent pacemaker - Ablation of the AV conduction system, whether inadvertent or *possibly* purposeful, could require implantation of a permanent pacemaker. Care will be taken by the investigators to avoid inadvertent ablation of the AV node. The EP lab staff is trained and equipped to handle any inadvertent ablation of the conduction system.

Sino-atrial block-sinus pauses requiring a permanent pacemaker- Ablation of the sinus node, whether inadvertent or *possibly* purposeful, could require installation of a permanent pacemaker. Care will be taken to avoid SA nodal ablation or isolation of the SA node. The EP lab staff is trained and equipped to handle this type of procedure.

Cardiac perforation and/or resulting hemopericardium and/or tamponade - As stated above, atrial perforation is believed to be unlikely since the REVELATION™ Tx is relatively floppy with an atraumatic tip. Users will manipulate the catheter with care under fluoroscopy in order to prevent such a remote occurrence. In the event that this does occur, hospital staff are equipped to respond to this type of complication in the EP lab.

Emergent Thoracotomy - In the event of tamponade, response is typically swift and incorporates immediate pericardiocentesis and cardiac support. In severe cases, however, a patient would be taken to a surgical suite for surgical repair.

Endocarditis- This procedure will be performed under sterile technique, thereby decreasing the risk of endocarditis.

Myocardial infarction - Patients will be assessed during the initial history and physical for cardiovascular disease. Patients considered to be at a significantly increased risk for myocardial infarction will not be included in this study.

Nerve damage- The investigators responsible for placing the catheters are well trained and qualified to perform the procedure. Every effort will be made to avoid placing the catheters in an area that will potentially create nerve damage.

Pneumothorax - Pneumothorax occurs as a result of an improper catheterization technique in the thorax. Investigators participating in this study are well-experienced in catheterization techniques and appropriate responses in the case of this event.

Stroke- Patients will be on carefully monitored anticoagulation therapy before, during and after the procedure. In addition, the study will be conducted in the right atrium only.

Thromboembolization / Pulmonary Embolization - As described above, over-heating of tissue by radiofrequency energy may cause coagulum or thrombus formation that may be deleterious to a patient. Measures to minimize or avoid consequences of overheating the local tissue will be taken by:

- Assuring optimal contact of the endocardial surface is made by the ablation electrodes.
- Use of initial power and temperature settings that are at low risk of causing charring.
- Staging higher levels of power with restrictions of time and upper power levels that are still below probable levels of thrombus due to heat generation.
- Immediate termination of power to the ablating electrodes with increases of impedance.
- Attention will be judiciously applied to the anticoagulation regimen.

Valve or cardiac structure damage - The electrode catheter will be used in the right atrium but may cross the tricuspid valve during catheter manipulation. The number of times the REVELATION™ Tx catheter crosses the valve is not expected to be any greater than right-sided electrophysiology procedures currently being performed with conventional products. The REVELATION™ Tx is also much smaller in diameter than conventional catheters and has an atraumatic tip. Users will be instructed to avoid any inappropriate manipulation of the catheter in the region of the tricuspid valve.

5.1.2. Potential Mechanical/Electrical Failure Modes

As shown in the Physical Tests section of this document, extensive testing has been conducted to characterize the forces necessary to induce mechanical and electrical failures. Cardima believes that these tests have shown the REVELATION™ Tx and NavAblator™ can be safely used without failure under the conditions for which they are intended. The primary failure modes can be identified as follows:

Loss of electrical conductivity - The catheters are 100% checked for electrical conductivity during manufacturing and have undergone the same check after physical testing and found to pass. Although unanticipated, if a conduction break did occur, it would be promptly noticed. Breaks in the electrode conductor would result in electrograms that would be noisy or non-existent. Application of RF energy would also be ineffective and a higher than normal impedance value would register on the generator indicating a problem. Breaks in thermocouple conductor wires would result in the inability to read a temperature. The RF generator would not be capable of operating in temperature feedback control mode. In either unlikely event, the catheter would be removed for analysis and replaced by a new device.

Improper circuiting - Another possible failure mode involves cross-circuiting of conductor wires due to incorrect wiring of the distal electrodes and thermocouples to the proximal connectors or due to breakdown of the conductor wire insulation during use. If electrodes are cross-circuited, users would then read erroneous electrograms from the catheter and could also misdirect RF energy to the wrong electrode. If thermocouple conductors are attached to the incorrect connector a possibility exists that during temperature feedback power control, the incorrect temperature may be used and excessive power may be delivered. In this instance, the excessive power may cause excessive heating that would lead to an impedance rise which would be noted by the user. If electrodes and thermocouple conductors are cross circuited, excessive interference would be created on the thermocouples which would result in erroneous temperature readings. Cross-circuiting failure modes are unlikely as 100% cross-talk tests are required during

manufacturing and products have undergone the same check after physical testing and found to pass.

5.2. The Manner in Which the Potential Risks Will Be Minimized

To assure that the potential risks to the study subjects are minimized, in addition to the measures described above, we have also conducted extensive preclinical testing of the REVELATION™ Tx Microcatheter and NavAblator™ catheter, and incorporated a number of precautions in our clinical protocol. First, we have conducted appropriate biocompatibility testing of the REVELATION™ Tx Microcatheter to demonstrate that the device materials are safe, suitable and biocompatible for their intended use as a cardiac electrophysiology mapping, pacing and ablating catheter.

Second, we have conducted a failure modes and effects analysis on REVELATION ™ Tx Microcatheter and the NavAblator™ to characterize product performance, safety margins, and failure modes. We have attempted to simulate actual product use in the in vivo environment, as best as possible, during the failure modes and effects analysis. The results from the failure modes and effects analysis have been used to set appropriate performance specifications for both catheters, and to assure the consistency and quality of our devices for clinical testing.

Third, we have incorporated several cautionary procedures into our investigational protocol to protect the study subjects and to detect any potential adverse effects. We have set stringent inclusion/exclusion criteria in our protocol to assure that any study subject who may be at an increased risk from an adverse effect is not enrolled in our study. The clinical investigators are carefully trained to follow all the required procedures to minimize incorrect device usage. We have also incorporated appropriate follow-up procedures to assure that any adverse effects are detected in a timely manner so that proper medical treatment can be initiated.

These follow-up procedures include: an electrocardiogram, a transthoracic echocardiogram, a physical examination, and the collection of PT/PTT/INR values prior to hospital discharge; arrhythmia event recorder monitoring during the entire 6 month follow-up period; at the 1, 3, and 6 month follow up visits, an electrocardiogram, physical examination and review of transtelephonic tracings will be conducted. In addition, at months 1 and 3, a PT/INR will be done to monitor coagulation levels; at month 3, a Stress test and a transthoracic echocardiogram will be done.

5.3. Potential Benefits Of Procedure

As described in another section of this document (see "Introduction"), AF is the most prevalent arrhythmia and is associated with various risks if left unattended. Patients often have palpitations, shortness of breath and fatigue. These changes in clinical condition, along with the side effects associated with various medications used to treat AF, impact the patient's overall quality of life. Anti-arrhythmic drug therapy has proven to be disappointingly ineffective as well as potentially life threatening.

The choice of a catheter based approach is one that may reduce the number of symptomatic episodes of AF. Use of the REVELATION™ Tx and NavAblator™ may provide the following benefits:

- Offers a safe, potentially curative, rather than palliative, treatment for AF.
- Restoration of normal sinus rhythm and effective mechanical AV synchrony.
- Reduction of the risk of thromboembolism from the left atrium.

- Reduction in patient discomfort due to palpitations.
- Modification of the characteristics of the arrhythmia and/or its clinical manifestations (e.g., fewer clinical events are noted during follow-up).
- Offers a technique to treat AF without undergoing more complex and risky surgical procedures (e.g., compartment or maze procedures).

5.4. Patient Population

A total of up to 128 adult subjects of either gender with symptomatic paroxysmal AF refractory to or intolerant of anti-arrhythmic drug therapy will be recruited and enrolled in this investigational pivotal study. The clinical study was designed to assure that study subjects with a range of symptoms and clinical history could be enrolled, but that study subjects who may be at increased risk from an adverse device or procedure related effect were excluded.

Any study subject that may be at significantly increased risk for a major cardiovascular complication is excluded from the study. This includes study subjects with a history of myocardial infarction in the previous six weeks, prior acute ablation failure within the previous two months, significant underlying structural heart disease, known or suspected coagulopathy or bleeding diathesis, prior cerebrovascular accident, echocardiographic evidence of intracardiac thrombus, atrial-septal defect/patent foramen ovale, left atrial dimension >5 cm, pregnancy, inability to comply with long-term anticoagulation therapy, or any condition that, in the investigator's opinion, would place the patient at an increased risk for complications.

The informed consent documents for this study include information on the potential risks and benefits of radiofrequency ablation utilizing the REVELATION™ Tx Microcatheter System, as well as alternative treatments, to help assure that each study subject can make an informed decision about participation in the clinical study.

5.5. Justification for the Investigation

The risks listed above are believed to be justified compared to the potential benefits that may be derived by the procedure.

In the first part of this investigation, Phase Ia, investigators evaluated catheter performance of the REVELATION™ for catheter placement, recording and pacing in predetermined anatomical locations. The catheter was successfully placed in all locations, the pacing thresholds were excellent and the signals were sharp and clear.

In the second part of this investigation, Phase II, investigators at ten centers treated 38 paroxysmal AF patients with RF ablation using the REVELATION™ Tx in the right atrium.

As of April, 2000, examination of the early clinical effectiveness based upon follow-up data for Phase II indicated a 50% or greater reduction of AF episodes in 21 of 37 (57%), 20 of 32 (62%), and 17 of 27 (63%) treated subjects available at 1, 3 and 6 months, respectively. There were 12 of 27 subjects (44%) experiencing a 100% reduction at the six-month follow-up period. Patients compliant with the follow-up protocol that did not undergo a pacemaker implantation and exhibited a reduction of episodes did so on the average 65%, 71%, and 87% at 1, 3 and 6 months, respectively. These follow-up results indicate that the REVELATION™ Tx is being effectively used, and will have clinical benefit. The study also reached the initial statistical goal of producing a reduction of episodes by at least 50% in a majority of subjects at the sixth month.

Major Adverse effects in this clinical experience include two sinus node dysfunctions requiring permanent pacemaker insertions and one stroke. It should be noted that the subjects with SA block had a previous history of sinus node dysfunction. The subject experiencing a stroke has shown it to be resolving and is currently AF free.

In weighing the risks against the potential benefits for symptomatic individuals with drug refractory paroxysmal AF, the sponsor feels that the study protocol is justified when carefully followed. With diligent monitoring and without employing an overly aggressive ablation strategy, we believe the study can be safely conducted.

6. References

Clinical Journal Articles and Abstracts

Avitall B. *Physics and Engineering of Transcatheter Cardiac Tissue Ablation.* **J Am Coll Cardiol** 1993; 22:921-932.

Bubien R, Knotts-Dolson SM, Plumb VJ, Kay GN. *Effect of Radiofrequency Catheter Ablation on Health-Related Quality of Life and Activities of Daily Living in Patients With Recurrent Arrhythmias* **Circulation** 1996; 94: 1585-1591.

Cobbe SM. *Incidence and Risks Associated with Atrial Fibrillation*. **PACE** 1994; 17; 1005-1009

Cox J, Boineau JP, Schuessler RB, Kater KM, Lappas DG. *From Fisherman to Fibrillation: An Unbroken Line of Progress.* **Annals of Thoracic Surgery** 1994; 58: 1269-1273)

Cox J, Schuessler RB, Lapas DG, Boineau JP. *An 8 ½ Year Clinical Experience with Surgery for Atrial Fibrillation* **Annals of Surgery** 1996; 224: 267-275)

Elvan A, Pride HP, Eble JN, Zipes DP. *Radiofrequency Catheter Ablation of the Atria Reduces Inducibility and Duration of Atrial Fibrillation in Dogs.* **Circulation** 1995; 91:2235-2244.

Feinberg WM, Blackshear JL, Laupacis A, Kronmal R, Hart RG. *Prevalence, age distribution, and gender of patients with atrial fibrillation: Analysis and implications*. **Arch Intern Med** 1995; 155; 469-473

Haines, D *Determinants of Lesion Size During Radiofrequency Catheter Ablation: The Role of Electrode-Tissue Contact Pressure and Duration of Energy Delivery.* **J Cardiovascular Electrophysiology** 1991; 2:509-515.

Haines, D *The Biophysics of Radiofrequency Catheter Ablation in the Heart: The Importance of Temperature Monitoring.* **PACE** 1993; 16:586-591.

Haines, D and Watson, D *Tissue Heating During Radiofrequency Catheter Ablation: A Thermodynamic Model and Observations in Isolated Perfused and Superfused Canine Right Ventricular Free Wall.* **PACE** 1989; 12:962-976.

Haissaguerre M, Gencel L, Fischer B, Le Metayer P, Poquet F, Marcus Fl, Clementy J. *Successful Catheter Ablation of Atrial Fibrillation.* **J. Cardiovascular. Electrophysiology** 1994; 5:1045-1052.

Haissaguerre M, Jais P, Shah D, Takahashi A, Hocini M, Quiniou G, Garrigue S, Le Mouroux A, Le Metayer P, Clementy J. *Spontaneous initiation of atrial fibrillation by ectopic beats originating in the pulmonary veins*. **N Engl J Med** 1998;339:659-66

Haissaguerre M, Shah D, Jais P., Clementy J. *Role of catheter ablation for atrial fibrillation.* **Current Opinion in Cardiology** 1997;12:18-23

Kay GN, Plumb VJ. *The Present Role of Radiofrequency Catheter Ablation in the Management of Cardiac Arrhythmias.* **Am J of Medicine** 1996; 1100:1344-1356.

Keane D, Guerrero L, Ettelson L, McGovern BA, Garan H, Ruskin JN. *Right atrial multipolar catheter ablation of atrial fibrillation in a pace induced goat model.* **J Am Coll Cardiol** 1997;Suppl:32A(abstr.)

Keane D, Zhou L, Ruskin J. *Catheter ablation of atrial fibrillation*. **Seminars in Interventional Cardiol** 1997;2:233-244.

Keane D, Lamkin R, Zhou L, Aretz T, Houghtaling C, McGovern B, Garan H, Ruskin JN. Intracardiac *Echocardiography and Temperature Decay for the Guidance of Radiofrequency Catheter Ablation.* **J Am Coll Cardiol** 1999;in press (abstr)

Kempler P. *Surgery for Atrial Fibrillation - Results, Limitations, and Future Directions.* **Cardiovasc Rev & Reports** 1993; 26-31.

Maglio C, Sra J, Paquette M, Durian P, Bygrave A, Wood K, Ayers G. *Measuring Quality of Life and Symptom Severity in Patients with Atrial Fibrillation* **PACE**, 1998; 21:839

National Heart, Lung, and Blood Institute Working Group on Atrial Fibrillation, *Atrial Fibrillation: Current Understandings and Research Imperatives.* **J Am Coll Cardiol** 1993; 22:1830-34

Scheinman MM, Morady F, Hess D, Gonzalez R. *Catheter-induced ablation of the atrioventricular junction to control refractory supraventricular arrhythmias.* **JAMA** 1982;248:851-5

Strickberger SA, Weiss R, Knight BP, Bahu M, Bogun F, Brinkman K, Harvey M, Goyal R, Daoud E, Man KC, Morady F. *Randomized Comparison of Two Techniques for Titrating Power During Radiofrequency Ablation of Accessory Pathways.* **J Cardiovasc Electrophysiol** 1996; 17:795-801.

Swartz JF, Pellersels G, Silvers J, Patten L, Cervantez D. *A catheter based curative approach to atrial fibrillation in humans.* **Circulation** 1994;90(Part II):I-335(abstr.)

Wittkampf, F. *Control of Radiofrequency Lesion Size by Power Regulation.* **Circulation** 1989; 80:962-968.

Ware JE, Kosinski M, Bayliss MS, McHorney CA, Rogers WH, Raczek A. *Comparison of methods for scoring and statistical analysis of SF-36 health profiles and summary measures: summary of results from the Medical Outcomes Study.* **Med Care 1995;** 33(Suppl 4):AS264-AS279

Williamson BD, Man KC, Daou E, Niebauer M, Strickberger SA, Morady F. *Radiofrequency catheter modification of atrioventricular conduction to control the ventricular rate during atrial fibrillation.* **N Engl J Med** 1994;331:910-7. [Erratum, N Engl J Med 1995;332:479]