PRESTIGE® Cervical Disc System
Medtronic Sofamor Danek

FDA Presenters:
Jonathan Peck, ME
Ann Costello, PhD, DMD
Telba Irony, PhD
Xuefeng Li, PhD
Judith Cope, MD, MPH

Review Team

Judith Cope, MD, MPH (OSB)
Ann Costello, PhD, DMD (ODE)
Martin Hamilton, RN, BSN (OC)
Erin Keith, MS (OC)
Xuefeng Li, PhD (OSB)
Danica Marinac-Dabic, MD (OSB)
Jennifer Medicus, BE, ME (OC)
Jonathan Peck, ME (ODE)
William Vitale, DMD (OC)
Mary Ann Wollerton (OCER)

Overview

- Device Introduction
- Preclinical Testing Summary
- Clinical Protocol
- Effectiveness/Safety Evaluation
- Introduction to Bayesian Statistics
- Bayesian Statistical Analysis
- Panel Questions

First of a Kind…

- Cervical disc replacement
- Metal-on-metal articulation in the spine
- Disc with screw fixation

Indications for Use

The Prestige Cervical Disc is indicated in skeletally mature patients with cervical degenerative disc disease (DDD) at one level from C3-C7. DDD is defined as intractable radiculopathy and/or myelopathy with at least one of the following items producing symptomatic nerve root and/or spinal cord compression which is documented by patient history (e.g., pain [neck and/or arm pain], functional deficit, and/or neurological deficit), and radiographic studies (e.g., CT, MRI, x-rays, etc.): 1) herniated disc, and/or 2) osteophyte formation.

Device Description

Stainless Steel (ASTM F-138)

Metal-on-Metal Articulation

Ball and Trough Mechanism

Flange and Bone Screws

Motion Allowed by Prestige *In Vitro*

Flexion/Extension	>10°
Lateral Bending	>10°
Axial Rotation	Unconstrained
Anterior/Posterior Translation	2mm

Device Modification

- Anterior Cut Angle Reduced to 3°
- Reduces Flexion of Worst-Case Device to 11.45°

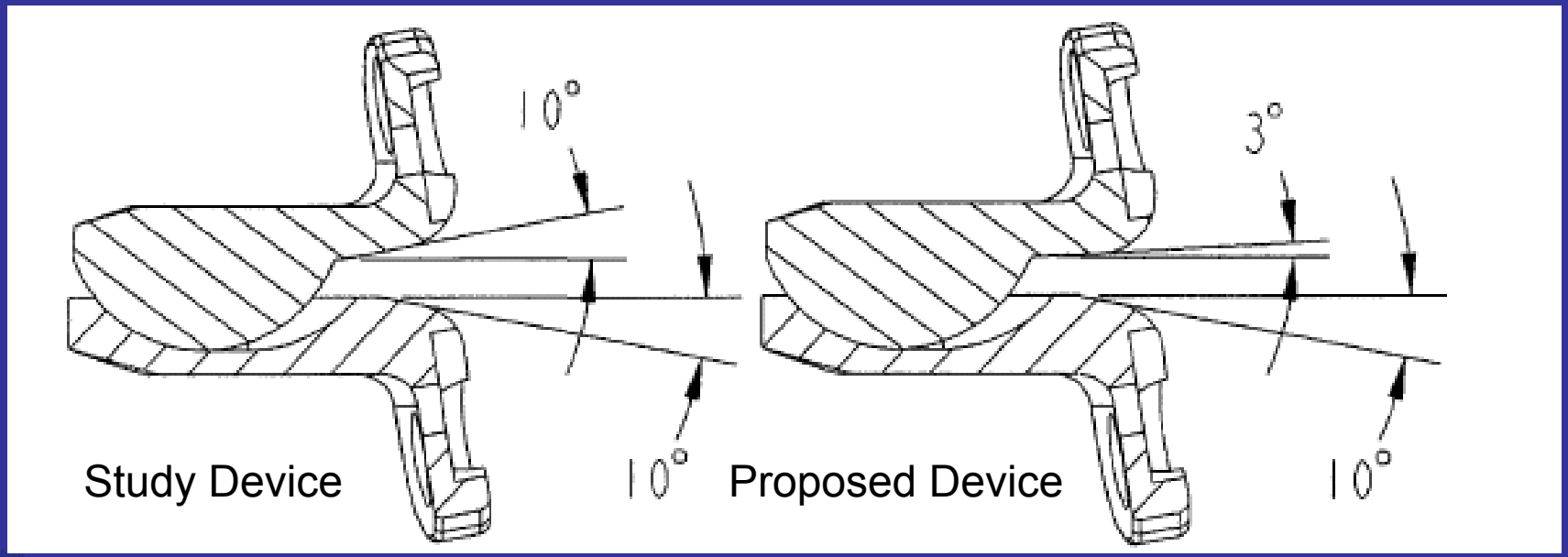

Pre-clinical (Bench) Testing

- Static Compression
- Compression Fatigue
- Subsidence
- Subluxation
- Push-out
- Pull-out
- Wear Testing

Pre-clinical (Bench) Testing

- Static Compression: >1300N
- Compression Fatigue: 225N @ 10Mc
- Subsidence: 550N
- Subluxation: >75N
- Push-out: 129N
- Pull-out: >190N

Acceptance criteria[1]: 74N compressive, 20N shear

[1]White A, Panjabi M. *Clinical Biomechanics of the Spine* J.B. Lippincott Company. 1990.

Pre-clinical (Bench) Testing

Wear Testing:

- Three devices tested in LB/AR then F/E
- Three devices tested in F/E then LB/AR

Motion Type	Motion/ Frequency	Compressive Load	Number of Cycles
Lateral Bending/ Axial Rotation	± 4.7° LB @ 2Hz coupled with ± 3.8° AR at 2Hz	49N	5 million
Flexion/ Extension	± 9.7° FE at 2Hz	148N	10 million

Pre-clinical (Bench) Testing

Wear Testing Results:

LB/AR followed by F/E

- 3.699 ± 1.298 mm^3
- 0.533 ± 0.208 mm^3/Mc LB/AR
- 0.067 ± 0.015 mm^3/Mc F/E

F/E followed by LB/AR

- 3.855 ± 1.272 mm^3
- 0.006 ± 0.005 mm^3/Mc for F/E
- 0.733 ± 0.252 mm^3/Mc for LB/AR

Pre-clinical (Animal) Testing

Rabbit Particulate Injection Study

- 20 million and 60 million cycle doses
- 3 month and 6 month sacrifices
- Particle shape and size were tailored to match bench test particles

- Sponsor's Conclusions: Material is a non-irritant and non-toxic

Explant Information

Three Stainless Steel Prestige Devices Explanted

Evaluators Concluded:

- Histology – Results typical of peri-prosthetic tissues adjacent to metal on metal arthroplasty devices.
- Metallurgy – Only slight wear was observed suggesting that perhaps 0.1 million cycles of simulation represents 1 year of clinical use.

Anderson PA, Rouleau JP, Toth JM, Riew KD. A comparison of simulator-tested and retrieved cervical disc prostheses. *J Neurosurg* 2004; 2:202-210.

Overview

- Device Introduction
- Preclinical Testing Summary
- *Clinical Protocol*
- *Effectiveness/Safety Evaluation*
- Introduction to Bayesian Statistics
- Bayesian Statistical Analysis
- Panel Questions

Study Design

- Randomized, multicenter prospective
- 32 centers, 541 subjects (276 Prestige, 265 controls)
- Randomized 1:1
- Preplanned interim analysis at 250 implanted subjects at 24 months

Objective

- Evaluate the safety and effectiveness of the Prestige for the treatment of single-level cervical DDD
- Demonstrate non-inferiority compared to the control device (anterior fusion utilizing bone graft and plate stabilization)
- Non-inferiority margin of 10%

Indications for Use

- The Prestige system is indicated in skeletally mature individuals with cervical DDD at one level from C3 to C7.
- DDD is defined as intractable radiculopathy and/or myelopathy producing symptomatic nerve root and/or spinal cord compression due to a herniated disc or osteophyte formation.

Inclusion Criteria

- DDD at a single level between C3 and C7
- 6 weeks unsuccessful conservative therapy or signs of progression or spinal cord/nerve root compression with continued non-operative care
- NDI $\geq$ 30

Exclusion Criteria

- Cervical instability defined by flexion/extension radiographs showing sagittal plane translation >3.5 mm or sagittal plane angulation >20º
- Severe pathology of facet joints of involved vertebral bodies
- Fused level adjacent to level to be treated
- Previous surgical intervention at involved level
- Spinal metastases

Evaluation Schedule

Preop (within 6 months of surgery), intraop, postop at 6 weeks, 3, 6, 12 and 24 months

Complications and adverse events

Clinical and radiographic outcomes

Primary Endpoint

Original Endpoint:

Overall success based on

- At least 15 point improvement on NDI
- Maintenance or improvement in neurological status
- No serious AE classified as implant-associated or implant/surgical procedure-associated
- No additional second procedure
- Maintenance of FSU height

  (<2 mm decrease after 6 weeks)

Revised Endpoint:

Overall success without FSU

Radiographic Success

Prestige

- Existence of flexion/extension angular motion in a range of >4º to ≤ 20º
- No evidence of bridging trabecular bone forming a continuous connection between vertebral bodies

Control

- Radiographic evidence of bone spanning the two vertebral bodies
- Flexion/extension stability (≤ 4º)
- No radiolucent lines covering more than 50% of implant surface

Secondary Effectiveness Endpoints

- SF-36
- Neck pain
- Arm pain
- Patient satisfaction
- Patient perceived global effect
- Physician assessment
- Gait assessment
- Foraminal compression test
- Adjacent level stability
- Adjacent level measurement
- Return to work

Patient Accounting

	Preop		12 Months		24 Months	
	Prestige	Control	Prestige	Control	Prestige	Control
Enrolled	276	265	276	265	276	265
Theoretical FU	276	265	276	265	137	148
Deaths	0	0	0	2	0	0
N expected	276	265	276	263	137	148
N evaluated	276	265	264	227	128	122
% FU	100	100	95.7	86.3	93.4	82.4
% Total FU	100	100	95.7	86.3	46.4	46.0

Demographics

Variable	Prestige N=276	Control N=265	P-value
Age yrs.	43.3	43.9	0.435
Height in.	67.4	67.5	0.767
Weight lb.	181.7	184.7	0.389
Sex (% male)	46.4	46	1.000
% Worker's comp.	11.6	13.2	.603
% Tobacco use	34.4	34.7	1.000
% Alcohol use	43.5	53.2	0.025
% Preop work status	65.9	62.6	0.473

Preop Condition

Variable	Prestige N=276	Control N=265	P-value
Time to symptoms <6 wks 6 wks to 6 mo >6 mo	 21 81 174	 15 89 161	.453
# Prev. neck surgeries 0 1 2	 275 1 0	 263 1 1	.745
Non-narcotics	197 (71.9%)	187 (71.1%)	.849
Weak narcotics	130 (47.3%)	127 (48.3%)	.863
Strong narcotics	57 (20.9%)	58 (22.0%)	.833
Muscle relaxants	119 (43.4%)	114 (43.2%)	1.000

Preop Clinical Endpoints

Variable	Prestige N=276	Control N=265	P-value
NDI	55.7	56.4	.632
SF-36 PCS	31.9	32.0	.760
SF-36 MCS	42.4	42.7	.795
Neck pain	68.2	69.3	.553
Arm pain	59.1	62.4	.191

Surgical Results

Variables	Prestige N=276	Control N=265
Operative time	1.6	1.4
EBL	60.1	57.5
Spinal level treated		
C3-C4	7 (2.5%)	10 (3.8%)
C4-C5	14 (5.1%)	15 (5.7%)
C5-C6	143 (51.8%)	149 (56.2%)
C6-C7	112 (40.6%)	91 (34.3%)
External Orthosis		
Soft collar	84 (30.4%)	109 (41.4%)
Hard collar	1 (0.4%)	40 (15.2%)
None	190 (68.8%)	108 (40.9%)
Other	1 (0.4%)	7 (2.7%)
Classification		
Inpatient (>23 hrs)	194	183
Outpatient (<23 hrs)	82	82

Safety

AE	Prestige N=276 # events, N (%N)	Control N=265 # events, N (%N)
Any AE	698, 226 (81.9)	601, 212 (80.0)
Carpal tunnel syndrome	14, 12 (4.3)	7, 7 (2.6)
Dysphagia/ dysphonia	23, 23 (8.3)	22, 22 (8.3)
Neck/arm pain	190, 138 (50.0)	173, 127 (47.9)
Neurological	78, 66 (23.9)	65, 55 (20.8)
Trauma	69, 59 (21.4)	47, 40 (15.1)
Death	0	3, 3 (1.1)
Neoplasms	5, 5 (1.8)	2, 2 (0.8)

Neoplastic Events

Prestige Time to Event	Type of Neoplasm
17 mo.	Breast
17 mo.	Colon
24 mo.	Basal cell
24 mo.	Thyroid
26 mo.	Non-Hodgkin's lymphoma

Control Time to Event	Type of Neoplasm
7 mo.	Astrocytoma
23 mo.	Skin cancer recurrence

Device-Related AEs

AE	Prestige N=276 # events, N (%N)	Control N=265 # events, N (%N)
Any AE	9, 9 (3.3)	29, 26 (9.8)
Anatomical/technical difficulty	1, 1 (0.4)	0
Implant displacement/ loosening	2, 2 (0.7)	3, 3 (1.1)
Infection	0	1, 1 (0.4)
Neck/arm pain	1, 1 (0.4)	2, 2 (0.8)
Neurological	4, 4 (1.4)	1, 1 (0.4)
Nonunion	0	6, 6 (2.3)
Pending nonunion	0	16, 16 (6.0)
Subsidence	1, 1 (0.4)	0

Secondary Surgical Procedures

Procedure	Prestige N=276, %N	Control N=265, %N
Revisions	0	5 (1.9)
Removals	5 (1.8)	9 (3.4)
Reoperations	4 (1.4)	2 (0.8)
Supplemental fixations	0	8 (3.0)

Overall Success

Variable	Prestige N=128	Control N=121
NDI		
Success	106 (82.8%)	99 (81.8%)
Failure	22 (17.2%)	22 (18.2%)
Neurological		
Success	120 (93.8%)	105 (86.8%)
Failure	8 (6.3%)	16 (13.2%)
FSU	*N=94*	*N=88*
Success	91 (96.8%)	84 (95.5%)
Failure	3 (3.2%)	4 (4.5%)
Second surgery failure	3	6
Serious AE	4	5

Overall Success continued

Variable	Prestige	Control
Overall success with FSU Success Failure	*N = 95* 77 (81.1%) 18 (18.9%)	*N = 90* 58 (64.4%) 32 (35.6%)
Overall success w/out FSU Success Failure	*N = 128* 103 (80.5%) 25 (19.5%)	*N = 122* 87 (71.3%) 35 (28.7%)

Pain Assessment

Arm Pain	Prestige N=128	Control N=121
Sign. Improvement (≤ -20 mm)	110	110
Some Improvement (-20 to -3 mm)	8	7
No change (± 3 mm)	2	3
Deterioration (≥ 3 mm)	8	1

Pain Assessment

Neck Pain	Prestige N=128	Control N=121
Sign. Improvement (≤ -20 mm)	91	94
Some Improvement (-20 to -3 mm)	20	14
No change (± 3 mm)	7	6
Deterioration (≥ 3 mm)	10	7

Secondary Endpoints

Variable	Prestige	Control
Neck pain		
Success	120 (93.8)	99 (81.8)
Failure	8 (6.2)	22 (18.2)
Arm pain		
Success	116 (90.6)	114 (94.2)
Failure	12 (9.4)	7 (5.8)
SF-36 PCS		
Success	109 (85.8)	102 (85.7)
Failure	18 (14.2)	17 (14.3)
SF-36 MCS		
Success	84 (66.1)	88 (73.9)
Failure	43 (33.9)	31 (26.1)
Effect of Sx		
Complete Recovery	58 (45.7)	46 (38.0)
Much improved	50 (39.4)	52 (43.0)

Secondary Endpoints Continued

Variable	Prestige	Control
Doctor Perception		
Excellent	90 (70.9)	68 (56.2)
Good	30 (23.6)	43 (35.2)
Gait		
Grade 0	127 (99.2)	119 (98.3)
Foraminal Compression		
Negative	121 (95.3)	116 (95.9)
Positive	6 (4.7)	5 (4.1)

Radiographic Success

Prestige	Angular motion >4º to ≤ 20º	No bridging bone	Overall
Success	85 (73.3)	122 (99.2)	85 (72.6)
Failure	31 (26.7)	1 (0.8)	32 (27.4)

Treated Level

Prestige	Preop	12 mo	24 mo
Angular motion (Mean ± SD)	7.55 ± 4.25º	7.59 ± 4.41º	7.87 ± 4.57º
Translational motion (Mean ± SD)	0.26 ± 0.26mm	0.33 ± 0.24mm	0.28 ± 0.23mm
Lateral Bending (Mean ± SD)	ND	6.73 ± 3.44º	6.39 ± 3.46º

Adjacent Level

	Preop		12 mo		24 mo	
	Prestige	Control	Prestige	Control	Prestige	Control
Level above (Mean ± SD)	11.17 ± 4.63º	10.77 ± 4.71º	11.94 ± 4.66º	12.07 ± 4.79º	12.05 ± 3.99º	11.63 ± 4.70º
Level below (Mean ± SD)	8.32 ± 4.42º	7.77 ± 4.17º	8.33 ± 4.60º	9.53 ± 4.79º	9.47 ± 4.65º	9.07 ± 4.01º

Summary

- Non-inferiority study
- Effectiveness
  - Overall success without FSU based on 250 implanted patients followed for 24 months
  - Overall success with FSU based on 185 implanted patients followed for 24 months
- Safety based on 541 implanted patients

Overview

- Device Introduction
- Preclinical Testing Summary
- Clinical Protocol
- Effectiveness/Safety Evaluation
- *Introduction to Bayesian Statistics*
- Bayesian Statistical Analysis
- Panel Questions

Introduction to Bayesian Statistics and Interim Analyses

Telba Z. Irony, Ph.D.
Chief, General and Surgical Devices Branch
Division of Biostatistics
Office of Surveillance and Biometrics
Center for Devices and Radiological Health

Outline

1. **What is Bayesian Statistics in a nutshell?**
2. **Interim Analyses**

1. What is Bayesian Statistics?

Statistics ⇔ Learning from evidence in presence of uncertainty

Probability

Probability measures one's uncertainty about a state of nature: parameter

How do we modify probabilities in the light of accumulating evidence?

Use Bayes Theorem

Bayes Theorem

- **Describes mathematically how one's probabilities are updated as information accrues**
- **Named after Thomas Bayes (born in 1700's)**
- **Until recently, it was computationally difficult to be used to update probabilities in clinical trials**
- **Bayesian methods are on the rise in academia, industry, and clinical trials due to advances in computational and algorithmic technology**
- **Several medical devices were approved by CDRH by using Bayesian Statistics**

FDA Issued a Draft Bayesian Guidance last May

- ***Guidance for the Use of Bayesian Statistics in Medical Device Clinical Trials*: for industry and FDA staff**
- **Describes Bayesian statistics as an approach to data analysis providing a coherent method for learning from evidence as it accumulates**
- **Covers Bayesian statistics, planning a Bayesian clinical trial, analyzing a Bayesian clinical trial, and post-market surveillance.**
- **Public comments were sent until August 21, 2006**
- **There was also a public meeting on July 27th**
- **See http://www.fda.gov/cdrh/meetings/072706-bayesian.html**

Example: Clinical Trial - New treatment

Δ: Treatment effect (parameter) - unknown

Pr(Δ) : prior probability

Data: Obtained from the clinical trial

Objective: Posterior probability on the treatment effect: Pr (Δ | data)

Question

What is the probability that the treatment effect is large enough?

Prior probabilities

Probability expresses uncertainty about Δ (delta)

My uncertainty
Uniform
Non informative

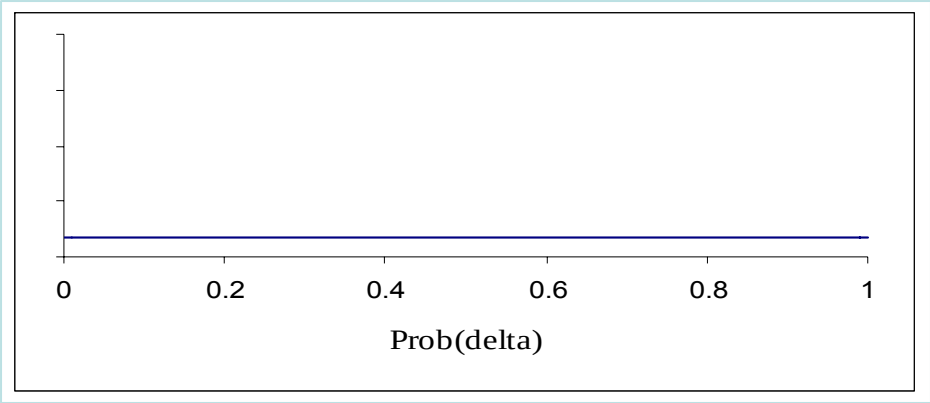

Expert's uncertainty
More informative

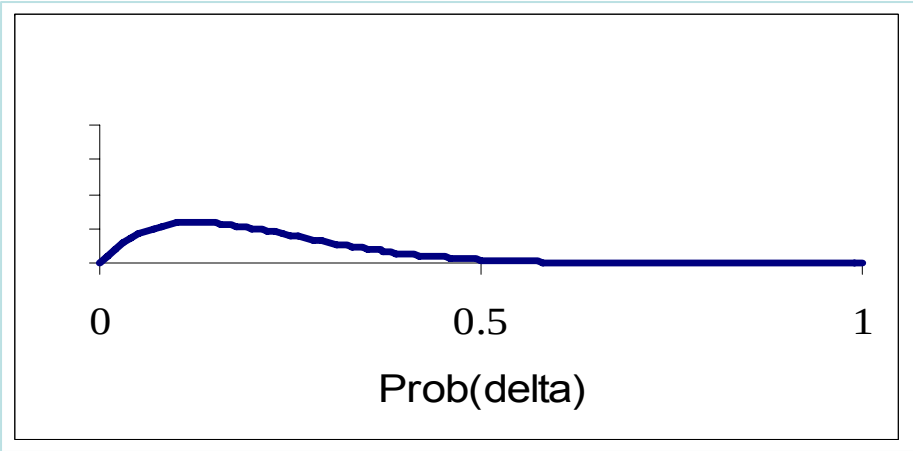

Learning

Prior

Trial

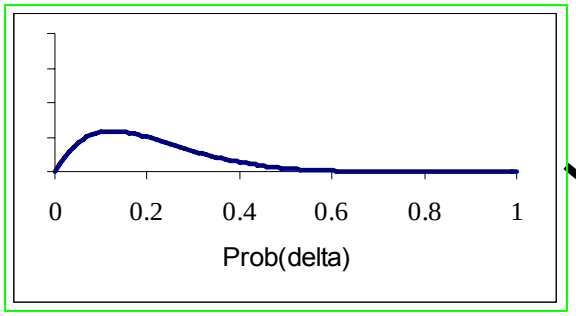

Data

Bayes

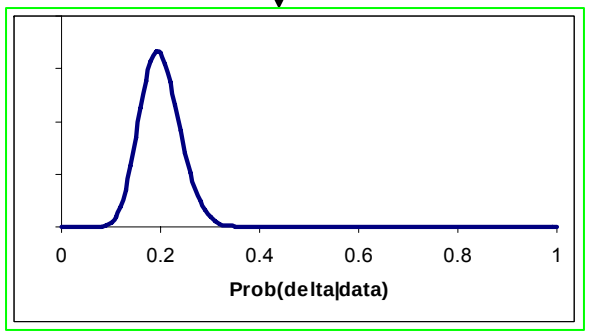

Posterior

Want to learn more?
Today's posterior is tomorrow's prior!

Tomorrow

Prior

Continuing the trial

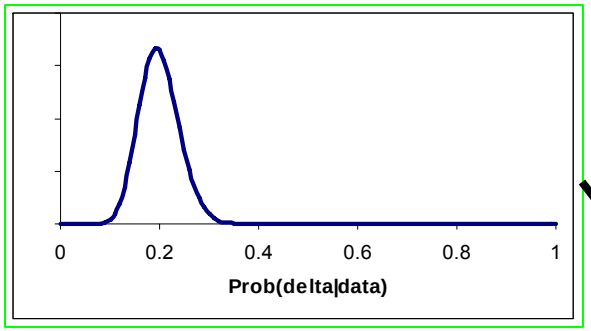

More Data

Bayes

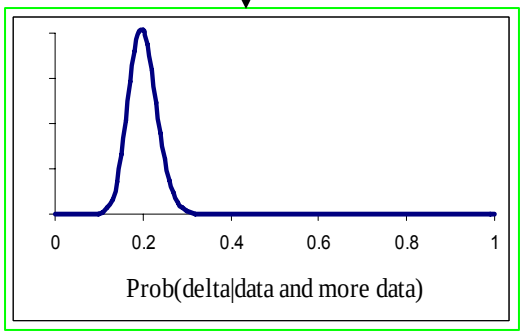

Posterior

The more information is gathered, the sharper becomes the posterior distribution!

If enough data is collected, the prior information is washed away!

All relevant information about the Δ is contained in the posterior distribution!

Credible Interval for Δ

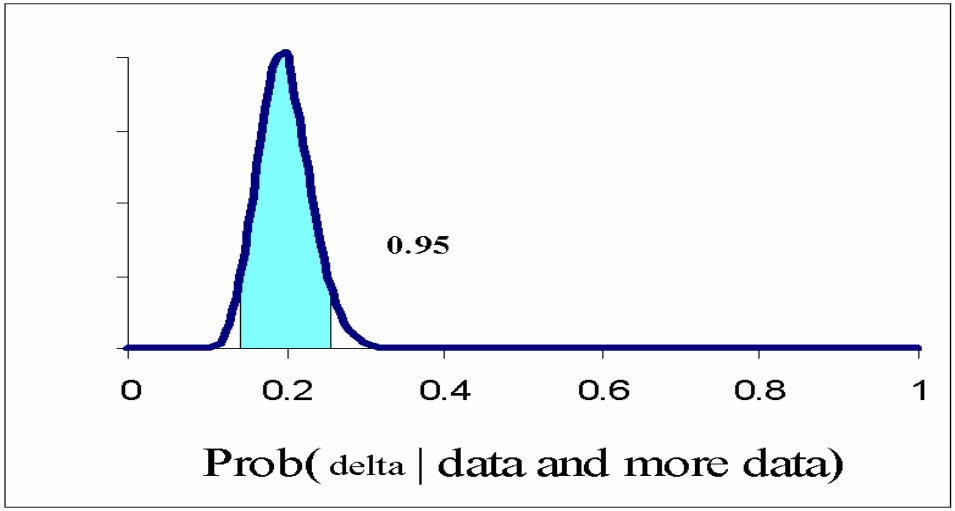

[0.15;0.25]

2. Example: A Bayesian trial with Interim Analyses

A totally Bayesian approach
The criteria for success is based on the posterior distribution
No frequentist criterion: no p-values
Planned at the design (IDE) stage

IDE

The type I error rate is assessed through simulations at the design stage
The penalty for multiple looks is embedded in the "success criteria"

New Treatment

Interest: *p* - proportion of failures

Prior: Pr (*p*) – Non-informative

Result: Posterior: Pr (*p* | data)

Want *p* to be smaller than 10% (0.1)

If there is a good chance that $p < 0.1$ => approve.

Pre-defined criterion (at the IDE stage):

Look at every 100 patients.

Stop and approve if Pr ($p < 0.1$ | data) > 0.95.

Minimum sample size: 250 patients

Maximum sample size: 800 patients (practical reasons)

Start with 250 patients (data1).

If Pr (p < 0.1 | data1) > 95% stop and approve.

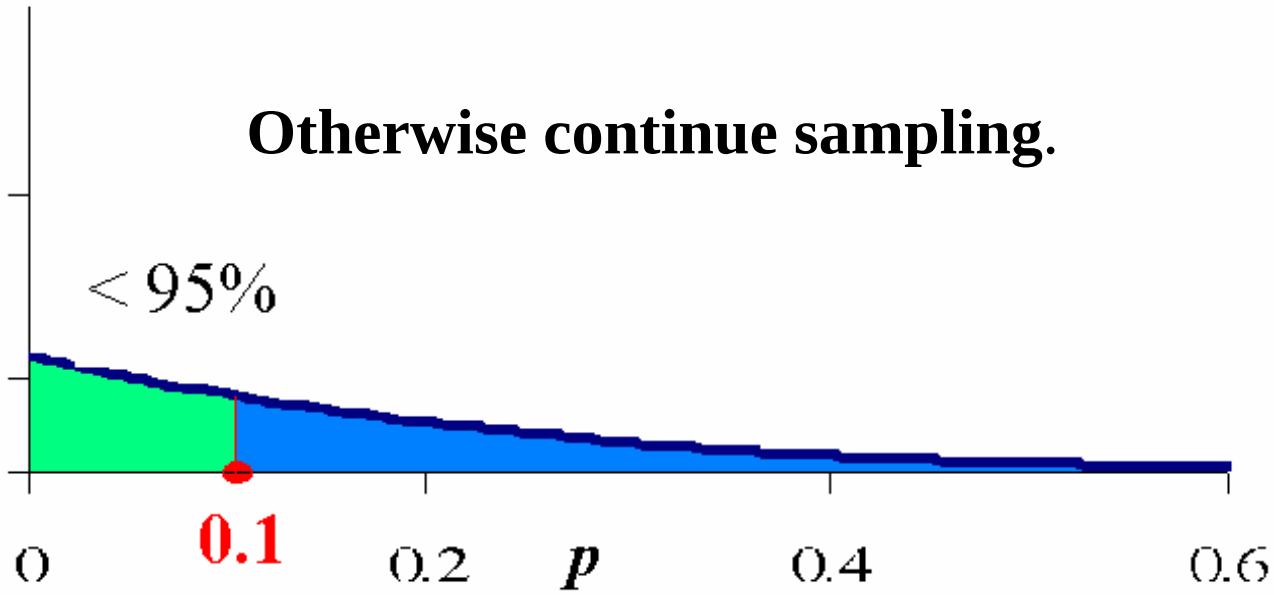

Sample 100 more patients (data2).

If Pr (p< 0.1 | data1+ data2) > 95% stop and approve.

Otherwise continue sampling.

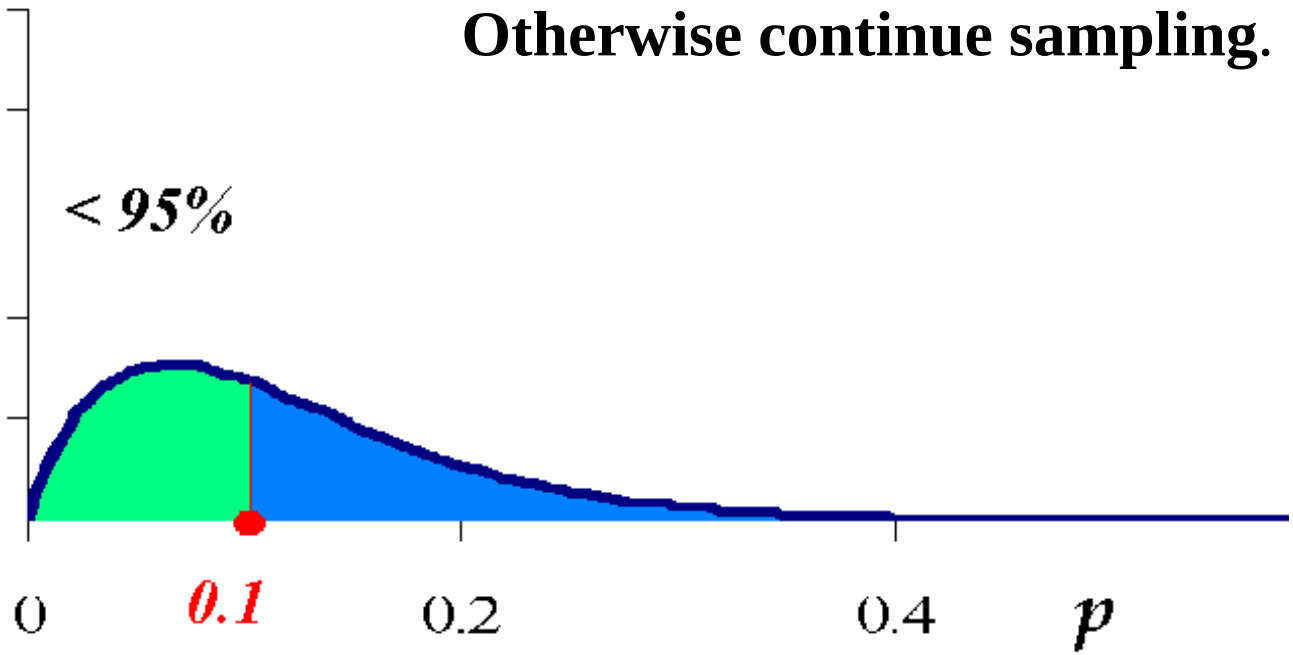

….. Sample 100 more (data i).

If Pr (*p*<0.1 |data1+data2...+data i)> 95% stop and approve.

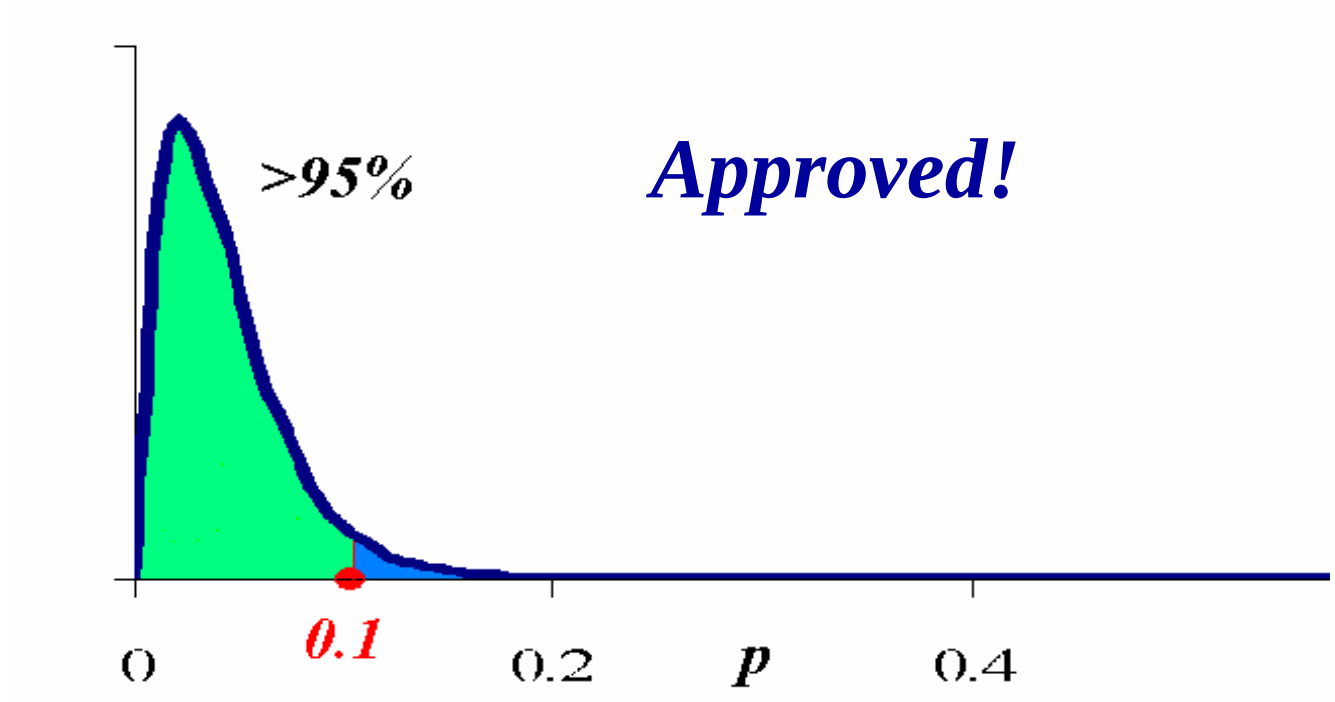

To illustrate what would happen in terms of type I and II errors, FDA asks for simulations when submitting the IDE

Type I error

If the proportion of adverse events were actually above 0.1, what would happen?
How often would the device be approved?

Type II error

If the proportion of adverse events were actually below 0.1, what would happen?
How often would the trial be not successful?

Example of evaluation of the experimental design

For each rate, simulated 1000 trials

Simulated proportions (p)	% Equivalence	Expected Sample Size	Error type	Error Rate
0.2	0.6%	426	I	0.6%
0.15	2.7%	529	I	2.7%
0.11	4.9%	761	I	4.9%
0.1	9.2%	786		
0.099	22.7%	778	II	78.3%
0.095	45.7%	612	II	54.3%
0.09	80%	594	II	20%
0.08	89.3%	510	II	10.7%
0.07	95.6%	428	II	4.4%
0.06	99.7%	327	II	0.3%

Could the company do this without planning?

NO !

This trial was planned as Bayesian from the beginning.

When Frequentists perform multiple looks, they have to pay penalties. The original α must be budgeted over the looks in a different way.

Overview

- Device Introduction
- Preclinical Testing Summary
- Clinical Protocol
- Effectiveness/Safety Evaluation
- Introduction to Bayesian Statistics
- *Bayesian Statistical Analysis*
- Panel Questions

Statistical Message

1. Bayesian study design with an interim analysis
2. Results on Primary effectiveness endpoints
3. Limitations of the analysis

Study Design

Pivotal Trial: A randomized, multi-center, unblinded study

- Prestige (n=276) vs. Fusion (n=265)
- 32 Centers, 1 to 49 subjects treated per center
- Randomized 1 : 1 at each center
- Bayesian analysis
- An interim look when 250 patients have 24 month data

Primary Endpoint

- Patient Overall Success: meet all at 24 month
  1. NDI score
  2. Neurological status
  3. No SAE
  4. No additional surgery
- Primary endpoint:
  - Overall success rate with FSU

Study Hypotheses (Cont.)

- Non-inferiority Trial: Δ=10%
- Hypothesis: the success rate of PRESTIGE group is not lower than control group by more than 10%

$$\text{Non-inferiority}: p_{prestige} + 0.1 > p_{control}$$

- Success criterion: the posterior probability that PRESTIGE is not inferior to the control is greater than 95%

$$P(\text{Non-inferiority} \mid \text{Data}) > 95\%$$

Interim Analysis

- An interim analysis was pre-specified when total 250 patients had 24-month evaluation
- Criterion of early stop for success

$$P(\text{Non-inferiority} \mid \text{Interim data}) > 95\%$$

- This PMA is based on the interim analysis

Bayesian Analysis

- Non-informative priors
- Posterior probability (PP)
  - Use all available 12 and 24 month data
  - 12 month data may carry information about 24 month data.
  - May add more information to the 24 month data to decrease the variability

Patient Accounting (Interim Stage)

	12 Months		24 Months	
	Invest.	Control	Invest.	Control
Enrolled	276	265	276	265
Eligible for Follow Up	276	263	137	148
With Overall Success Outcomes (%FU)	263 (95.3%)	223 (84.8%)	128 (93.4%)	122 (82.4%)
With Overall Success Outcomes + FSU (%FU)	205 (74.3%)	173 (65.8%)	95 (69.3%)	90 (60.8%)

Datasets for Analysis

1. Primary
   - All patients received devices and completed surgery (137 Pres. vs. 148 Cont.)
   - Exclude patients w/o overall success (128 Pres. vs. 122 Cont.)
   - Overall success w/ FSU (95 Pres. vs. 90 Cont.)
2. Per-protocol (126 Pres. vs. 113 Cont.)
   - Exclude patients with major protocol deviations
3. Missing equals-failure (137 Pres. vs. 148 Cont.)
   - All missing responses were assumed to be failures

Results: Primary Outcomes
Primary Dataset

Percentage of Success	Invest. Pt (n=128)	Control Pc (n=122)	PP of Non-Inferiority
NDI	80.8% (74.7%, 87.0%)	80.8% (74.1%, 86.7%)	98.5%
Neurological	92.1% (87.6%, 96.2%)	84.7% (78.6%, 90.5%)	~ 100%
FSU Height	95.4% (91.5%, 98.7%)	93.7% (89.2%, 97.8%)	~ 100%
Overall Success without FSU	78.8% (72.1%, 85.0%)	70.0% (62.7%, 77.4%)	~ 100%
Overall Success with FSU	80.1% (73.1%, 87.4%)	64.0% (55.3%, 72.8%)	~ 100%

More Results

- Per protocol and missing equals-failures datasets provided similar results
- Secondary endpoints yields supportive evidence

Limitations

- Definition of Success rates
- Sensitivity analysis
- Poolability

Definition of Success rates

- Different denominators were used when defining success rates
- Example

Overall Success Rate with FSU (Interim Data)

	Invest.	**Control**
With overall success with FSU	77/95 = 81.1%	58/90 = 64.4%
With overall success without FSU	77/128 = 60.2%	58/122 = 47.5%
All received devices (missing equals failure)	77/137 = 56.2%	58/148 = 39.2%

Sensitivity Analysis (Interim Data)
for Overall Success w/o FSU

- Missing overall success at 24 month
  - Invest. 9/137 (6.6%); Control 26/148 (17.6%)
- Frequentist sensitivity analysis
- In the worst case scenario
  - all missing invest. = failure
  - all missing control = success
  - non-inferiority still hold (p=0.0411).
- Sensitivity analysis for overall success with FSU was not provided

Poolability (Interim)

- Breslow-Day test was used
  - 11 sites with <10 enrolled patients were combined into one site
  - No significant heterogeneity across sites
- May lack power
  - After combining, 12 sites still had <10 evaluable patients

Poolability (Interim stage)

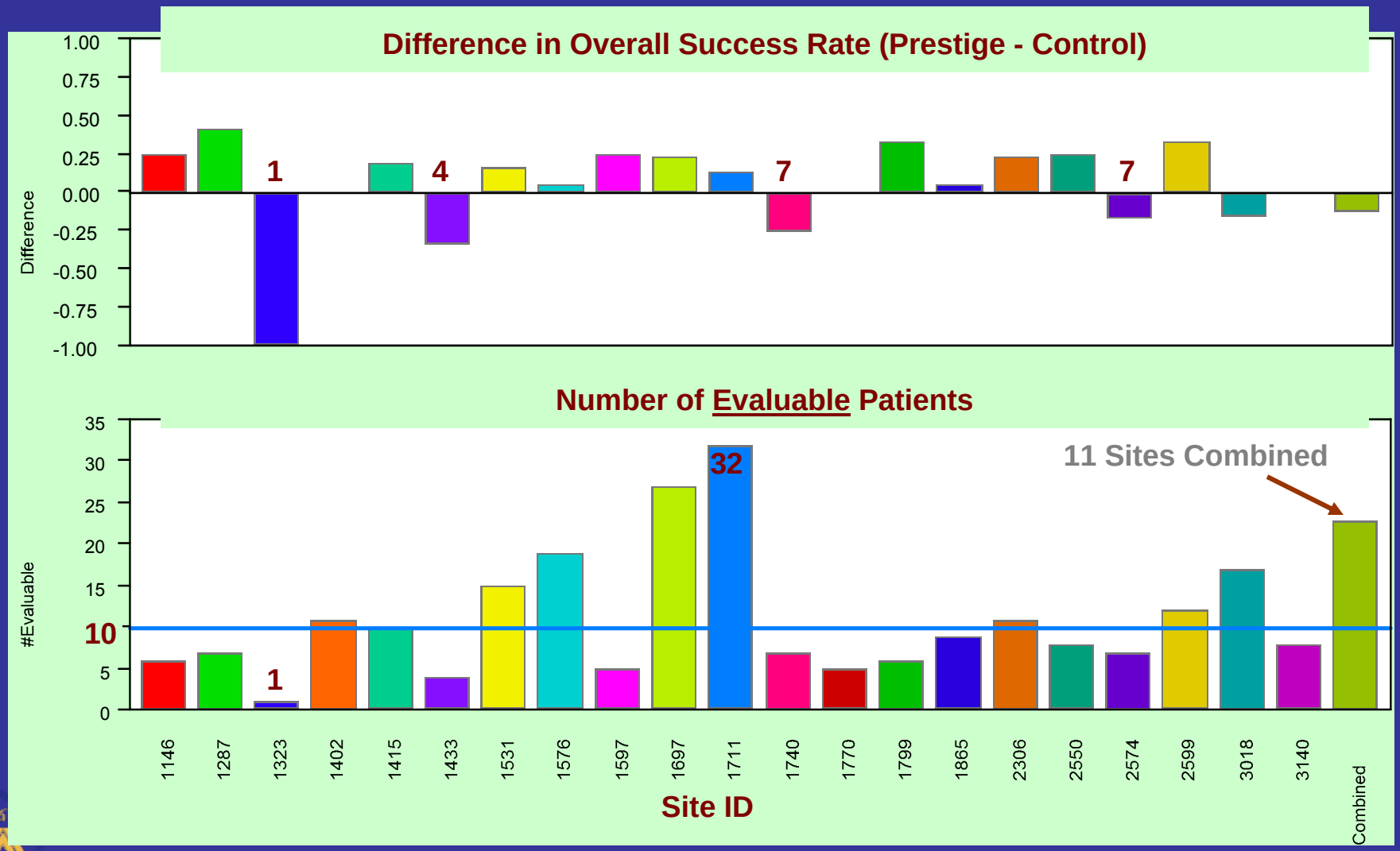

Summary

- Study met the primary endpoints at the interim look as pre-specified
- No firm statistical conclusion can be drawn from analyses of the secondary endpoints
- Limitations
  - Inconsistency in defining success rates
  - No sensitivity analysis for overall success with FSU
  - Pooling test may lack power

Thank You

Overview

- Device Introduction
- Preclinical Testing Summary
- Clinical Protocol
- Effectiveness/Safety Evaluation
- Introduction to Bayesian Statistics
- Bayesian Statistical Analysis
- *Panel Questions*

Panel Question #1

Please discuss the adequacy of the preclinical testing as provided by the sponsor as an assessment of the long term function and durability of the Prestige device.

Are any additional tests recommended?

Panel Question #2

Please discuss the potential impact of the design change on function of this device *in vivo*.

Please comment on the adequacy of the clinical data collected on the original device design in addressing the safety and effectiveness of the newly proposed device design.

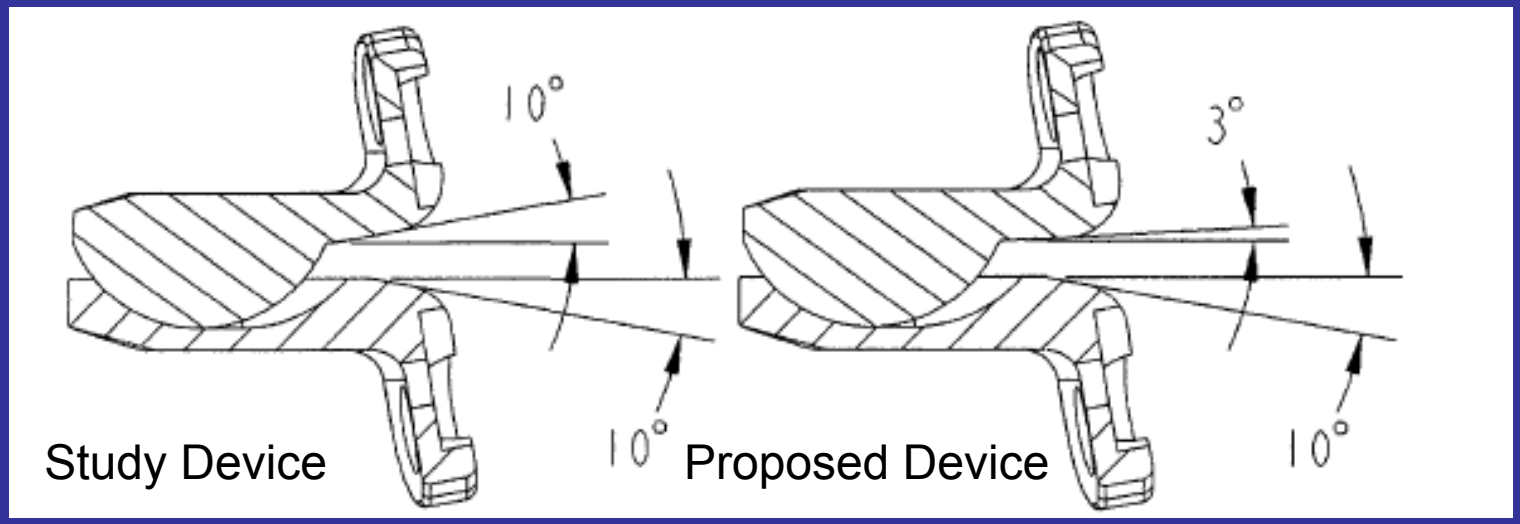

Panel Question #3

The interim analysis was performed when:

- 250 patients had all information *except FSU*, but
- Only 185 patients had complete overall success outcome information (including FSU).

Please discuss the appropriateness of making this change from the planned analysis.

FDA Slides 22, 25, 34, 35, 74

Panel Question #4

Considering the concerns with metal on metal devices (e.g., particulate wear generation, particulate migration, etc.), please discuss whether the neoplastic events raise safety concerns with the investigational device.

Please discuss whether additional data are necessary to address this issue.

FDA Slide 20, 31

Panel Question #5

Radiographic motion data was presented by the sponsor. Given the implied benefit of a motion retaining device, please discuss the clinical meaningfulness of the data provided.

FDA Slides 40 - 42

Panel Question #6

Please discuss whether the clinical data in the PMA provide reasonable assurance that the proposed device is safe for the specified indications and intended patient population.

If not, what additional data or analyses are needed?

FDA Slides 30 – 33

Panel Question #7

Please discuss whether the clinical data in the PMA provide reasonable assurance that the proposed device is effective for the specified indication and intended patient population.

If not, what additional data or analyses are needed?

FDA Slides 34 – 42, 74