MONOGRAPH

ON

VITAMIN A

I31

#78 vol.I

Monograph on Vitamin A-Volume I

#78

1/31/75

I 31

# MONOGRAPH

# ON

# VITAMIN A

Volume 1

TR-72-1552-65

Submitted Under:
Contract No. FDA 74-104

January 31, 1975

INFORMATICS INC.
6000 Executive Boulevard
Rockville, Maryland 20852

VITAMIN A

Table of Contents


| | | |
|---|---|---|
| Summary | | 1 |
| Chemical Information | | 18 |
| Biological Data | | |
| Acute Toxicity | | 30 |
| Short-Term Studies | | 30 |
| Long-Term Studies | | 49 |
| Special Studies | | 49 |
| Biochemical Aspects | | 90 |
| Appendix | | 113 |
| Bibliography | | |
| Volume 1 | | 171- 574 |
| Volume 2 | | 575-1077 |
| Documents | | |
| Volume 3 | No. | 1- 3456 |
| Volume 4 | No. | 3457- 7866 |
| Volume 5 | No. | 7867-10121 |
| Volume 6 | No. | 10122-10994 |

# VITAMIN A

## Summary

Vitamin A is an essential nutrient, occurring in foods in two forms: preformed Vitamin A, and the precursor or provitamin A carotenoids, particularly beta-carotene. The latter has the highest vitamin A activity and is most plentiful in many important foods. Dairy products, fats, green and yellow vegetables are major sources, with meats, eggs and other fruits and vegetables providing smaller amounts. The functions of vitamin A in the body are not completely understood; its role in the visual process has been well established and the deficiency state impairs dark adaptation. Other deficiency symptoms are increased susceptibility to bacterial infections, xerophthalmia and other eye disorders, anorexia, sterility and loss of weight. The maintenance of the integrity of epithelial tissues requires vitamin A.

Precise requirements of vitamin A have not been established and few experiments have been performed to determine the minimum daily requirements of human adults. The Food and Nutrition Board, N.R.C., 1968, has set 5000 IU of vitamin A as the recommended dietary allowance for the reference man and woman. The Canadian Council on Nutrition, 1968, recommended 3700 IU for adults. The FAO/WHO report, 1967, on vitamin A requirements recommends an intake of 2500 IU.

The emphasis of this monograph lies in the excessive intake of vitamin A and its toxic effects, and the studies reviewed herein deal chiefly with various aspects of hypervitaminosis A (deficiency studies, abstracted and documented by FDRL, have been edited and prepared for publication in this monograph as an Appendix). In some respects, the lesions associated with the deficiency of vitamin A, or with avitaminosis A, are similar to those found in hypervitaminosis A. Thomas Moore, an investigator of long standing in the search for information about vitamin A, tabulates or compares the two situations in a Chapter of Sebrell and Harris, editors, 1967. "The Vitamins" (10878):

COMPARISON OF LESIONS CAUSED BY DEFICIENCY OR EXCESS OF VITAMIN A

| Organ or tissue | Avitaminosis A | Hypervitaminosis A |
|---|---|---|
| Eyes | Xerophthalmia | Exophthalmia |
| Membranes | Keratinization in mucous membranes | Mucous cell formation in keratinized membranes |
| Bones | Defective modeling and cancellous structure | Attenuation of shafts, fractures |
| Reticulo-endothelial system | Swelling of Kupffer cells | Deposition of lipoid in Kupffer cells |
| Blood | Possible slightly increased clotting time | Hemorrhage, associated with greatly increased clotting time |
| Reproduction | Resorption or congenital abnormalities | Resorption or congenital abnormalities |
| Skin | Thinning | Temporary thickening |

It should be noted parenthetically, that the vitamin A precursors, carotenes, are not considered in the following studies, but have been the subject of a separate monograph. The excessive ingestion of carotenes results in a benign disorder, carotenemia, which is not to be confused with hypervitaminosis A.

Japanese investigators in the 1920's first described the condition of hypervitaminosis A in the course of testing crude vitamin A concentrates in rats and mice. Large oral doses produced loss of hair, emaciation and paralysis, with death following within days or weeks. Other investigators during the 1930's confirmed the injurious effects of excess vitamin A given by different routes to a variety of animals: skeletal abnormalities; severe internal hemorrhaging; skin lesions; loss of weight; eye defects; diarrhea; lowering of basal metabolism; degeneration of renal tubules and glomeruli, testes, heart and liver; tooth defects; and other lesions were reported during this time. The question arose by the end of the decade whether the vitamin A in the concentrates used experimentally was responsible for the toxic effects, or some other substance produced the lesions; the crude fish liver oils, the vitamin D which frequently accompanied the vitamin A, and other substances may have been responsible for some of the lesions attributed to vitamin A. Many efforts to duplicate those early experiments by using comparatively pure vitamin A failed to support the earlier findings.

Studies during the 1940's, with pure vitamin A concentrates (purified, crystalline vitamin A was produced in 1942; crystalline natural vitamin A acetate in 1945; and vitamin A alcohol in 1951), led some workers to conclude that the only lesions truly attributable to hypervitaminosis A, were skeletal fractures and hemorrhages.

Studies from the last decade have been chiefly those dealing with the teratogenic aspects of hypervitaminosis A in animal experimentation; cleft palate, spina bifida, deformities of the CNS, and other abnormalities, appear in the embryos from pregnant animals given large doses of vitamin A. It was during this period that the first cases of hypervitaminosis A in man were reported, mostly among infants and small children, with case reports numbering half a hundred during the next twenty years. The symptoms of chronic toxicity include anorexia, retarded growth, alopecia, skin lesions and skeletal lesions accompanied by painful swelling. Hemorrhage occasionally is seen. Acute vitamin A poisoning in children produces vomiting, drowsiness and bulging fontanelle; in adults, vertigo, severe headaches, abdominal pain and vomiting, as well as diarrhea.

The likelihood of hypervitaminosis A from ingesting naturally occurring foods is very small. The only known, or reported, cases involve arctic explorers who ate polar bear livers and suffered acute vitamin A poisoning. Studies of the vitamin A content in livers of polar bear, bearded seal, Greenland fox and Eskimo huskies have shown a very high content of up to 20,000 IU vitamin A/gram (7731). Chronic hypervitaminosis A in adults may occur when high, therapeutic doses are given over long periods of time, particularly in dermatological treatment for

skin diseases. There is a growing concern over the use of massive doses of vitamin A in dermatology; the benefits are often doubtful, and the dangers of hypervitaminosis are great (6346). Children may become victims of chronic poisoning through carelessness or parents who feel that "if a little is good for the child, a larger amount should be even better". It has been calculated that for small children, a chronic toxic dose would be about 100,000 IU daily; for adults, 2-5 million IU in a single dose, or 600,000 IU daily for a prolonged period.

Although no long term studies were available, numerous short term studies of the effects of hypervitaminosis A on chicks, rats, rabbits, guinea pigs, cats, dogs, pigs, and man have been reviewed. Most of the experiments are 1 month in length or less, but this appears to be long enough for many of the toxic symptoms to develop.

Several studies have been performed in which young chicks were fed vitamin A for such periods. Pudelkiewicz et al. (7405) found that while levels of up to 500 mg of retinyl acetate per kg diet were well tolerated by chicks, 5,000 mg/kg resulted in drooping heads, stuck eyelids, and depressed weight gain. Baker et al. (488) reported shorter, narrower, and lighter bones with marked inhibition of osteoblast activity in chicks fed 20 mg vitamin A acetate per 100 g body weight. Wolbach and Hegsted (9960) found similar skeletal problems in chicks fed 600-900 IU vitamin A.

The following symptoms were reported by Lewis and Cohlan (5411) in adult rats given per os 50,000 or 100,000 IU of vitamin A daily for 21 days, and were common in some combination and to varying degrees to almost all the other rat studies: scruffiness of the pelts, drowsiness, muscular weakness, hemorrhaging, anorexia, reduced growth, alopecia, swelling, and redness of the eyelids, exophthalmos, limping, and spontaneous fractures (752, 1414, 1766, 2293, 3323, 3832, 6224, 6329, 6657, 7078, 7735, 7736, 9372, 9741, 7994, 10677, 10763, 10841). Radiographs revealed a narrowing of the diameter of the shafts of the long bones with thinning of the cortex especially at the metaphysis. Spontaneous fractures were seen beginning at the 12th to 14th day; the fibula was the most common site of early fracture, followed by the humerus, femur, and tibia in that order. Gross scoliosis was noted in many animals after the second week (5411). Berdjis and Rinehart (753) observed the formation of small fibro-osteoclastic zones and/or lacunar resorption in the entire bony system of rats receiving 100-700 IU/g body weight. They felt this to be as classical a symptom of hypervitaminosis A as fractures, hemorrhages, and accelerated bone growth. Intense remodelling of the femur with absorption of shaft tissue was observed in a study by Selye (8281).

Gorlin and Chaudhry (3323) indicated that hypervitaminosis A had a severe effect on the temporomandibular joint of rats but minimal effects on the teeth. Irving (4213) found similar consequences. In another report (10763) examination of the incisors of hypervitaminotic rats showed increased vascuolarization of pulp and periodontium with thinning of the dentin. Minor changes in the gingival epithelium have also been observed.

Results of a 28-day feeding study by Ames et al (177) revealed no deaths at a level of 15,000 IU of vitamin A acetate per 100 g body weight daily and a $LD_{50}$ (at 28 days) of 20,000-30,000 IU per 100 g for rats. When animals were fed levels of 20,000 IU/day for 9-12 months, death occurred in half the rats. All died at 30,000 IU/day. Cappelin and Crepax (1414) obtained similar results.

In one of the longer studies (10763), groups of 10 male weanling Sprague-Dawley rats were intubated with 10,000, 25,000, or 50,000 IU/kg of each of three retinyl palmitate preparations for 5 months. Suprisingly, growth was normal for all groups given 50,000 IU/kg, but was depressed at the 10,000 and 25,000 IU/kg levels of one concentrate.

Leelaprute et al. (10763) fed groups of 10 female rats retinol or retinyl palmitate at 0, 25,000, 50,000, or 75,000 IU/day for 17 days and observed varying degrees of calcification in the kidneys, heart, and lungs with severe calcification occurring in the liver at levels of 50,000 IU or higher. Bayerle (10238) noted enlarged livers with small vacuolar changes of hepatocytes and Kupffer cells in female Sprague-Dawley rats fed 30,000-100,000 IU retinyl palmitate daily or on alternate days for periods up to 100 days. Lewis and Cohlan (5411) had also detected liver damage.

Strebel et al. (8782) saw no renal or cardiovascular pathology in 23 virgin female Holtzman rats which received 50,000 USP units/day for 16 days.

Autopsy of young male rats given 50,000 IU of retinyl acetate by gastric catheter daily for 5 days disclosed hemorrhagic extravasations in the viscera (especially lungs and liver), edema of the brain, enlargement of the liver, and distention of the stomach. Natanson et al. (6657) also reported an increase in the weight of the adrenals and a concurrent halving of the weight of the thymus which they correlated to a stimulation of the adrenocortical function.

When Ray et al. (7570) administered 30,000 IU of retinyl acetate to 20 young albino rats, the common symptoms of hypervitaminosis A ensued within 6 to 8 days. After 10 days, the weights of the heart, liver, kidney, and adrenal glands were raised, while spleen and brain weights were normal.

Microscopic changes indicative of hyperactivity were exhibited by the submandibular glands of young male Sprague-Dawley rats dosed with 10,000 IU of retinol on alternate days for 16 weeks (10841).

Carpenter and Sampson (10297) found histological changes in the thyroids of rats given doses of 25,000 rising to 75,000 IU of vitamin A daily. In similar studies by Berdjis and Rinehart (753) and Berdjis (752), the parathyroids were enlarged and there was metastatic calcification in the kidney.

Irregularities in the estrus cycle of rats occurred when they consumed 563 IU vitamin A per day above the required level during an 8 month period (1784). Weslaw et al. (9741) observed swollen external genitals in both male and female rats given 120 IU of vitamin A from a fish oil concentrate for 100 days.

Rodahl (7736) administered 50,000 IU of vitamin A from whale liver oil concentrate to 4 young rats for 58 days; histological examination of the liver, kidneys, adrenals, pancreas, intestines, lungs, and thyroid revealed marked hyperemia in the lungs, kidney, and liver. In another paper (7735) doses of 50-100 IU vitamin A per g body weight produced degeneration of the renal tubules, deposits of sudanophil droplets in the liver, and increased sudanophil deposits in the adrenal cortex. His studies indicated that the clinical symptoms as well as the postmortem findings were similar for young, adolescent, and adult rats. Rodahl determined that vitamin A was the component of whale liver oil responsible for toxic effects. However, Vedder and Rosenberg (9407) had earlier separated jewfish liver oil, fed various fractions to rats, and concluded that other toxic factors were present in the oil. Because of the question of which component elicits the toxic effects, a limited number of studies involving fish oils and fish oil concentrates have been reviewed.

Ear collapse resulting from depletion of the matrix in articular and epiphyseal cartilage was reported in four out of nine young albino rabbits given 500,000 IU of vitamin A palmitate daily for 6 days (9079).

Gil et al. (3154) fed groups of 5 male short-hair albino guinea pigs diets containing 1.67, 3.3, 6.6, 9.9, 16.5, 165, and 330 mg retinol per kg diet for at least 40 days; at 330 mg/kg metastatic calcinosis of the kidney and liver as well as atrophy of the liver were observed. In a study by Brusa and Testa (1266), doses of 300-600 IU vitamin A palmitate/g body weight induced weight loss, anorexia, alopecia, weakness, a spastic walk, and scoliosis. Histological examination revealed severe damage in the cerebral cortex, cerebellum, thalamus, and mesencephalon.

Clark (1709, 1710, 10318, 10320, 10321) performed a series of studies on the effects of hypervitaminosis A on the long bones of growing kittens. Growth retardation of the epiphyseal plates was viewed after 7 days at doses of 69,000 mcg vitamin A acetate/day (10320). Studies in which a thirty day treatment period was followed by a thirty day recovery period indicated that rapid compensatory activity occurs in bones following vitamin A toxicosis (1710, 10318).

Two two-month-old greyhound puppies suffered anorexia, marked weight loss, skeletal changes, hyperesthesia, and exophthalmus when given 300,000 IU vitamin A per kg body weight daily. Histological examination at 69 days exposed degenerative lesions in the arteries and veins of the myocardium, gall bladder, urinary bladder, and one lymph node of one animal (5632). When levels of up to 25,000 IU retinyl palmitate/kg were fed to 3 dogs for 10 months, no adverse effects on either growth or hematology were found (10763).

Pigs supplied daily with 6,614 and 19,842 mcg vitamin A acetate per kg live weight exhibited, respectively, mild and severe symptoms of hypervitaminosis A including hyperemia of the ventral portion of the body, abnormal stance with varying degrees of lameness, slight to severe hind limb immobilization, and extreme weakness. Osseous lesions were severe in both endochondral and intramembranous bone at the highest dose (9989). Also, the relative weights of the adrenal, heart, and kidney increased (10586). Similar results were obtained by Anderson et al. (203).

On page(s) 37-38 can be found two tables prepared by Muenter et al. (6499) which summarize the clinical effects of chronic hypervitaminosis A in man. From 41,000 to 600,000 IU vitamin A were consumed daily for 2 months to 9 years by 17 subjects. The smallest daily dose leading to intoxication was 41,000 IU taken for 8 years, however, intoxication occurred within a two-month-period at doses of 200,000 to 275,000 IU. Skeletal lesions have been reported in children suffering from chronic overdosing with vitamin A (1364, 6957).

The teratogenic effects of hypervitaminosis A have been studied extensively by many investigators. Thomas Moore (10741), states with regard to the ill effects of hypervitaminosis during pregnancy in rats: "Subsequent research has raised the question, still under investigation, of the degree to which such congenital malformations are specifically related to hypervitaminosis A, or indeed to any of the numerous deficiencies, or toxic agents, which can affect the developing fetus. In any event, the study of hypervitaminosis A, no less than avitaminosis A, has made an important contribution to pioneer work on experimental teratogeny." The malformations noted by Moore included resorption of the fetus, anencephaly, cleft palates, and cataracts which have been observed to variously occur in the offspring of the pregnant rat depending upon the period of pregnancy during which excessive doses of vitamin A have been administered.

A more recent listing of malformations induced by hypervitaminosis A in various test animals has been presented by Shenefelt (10891) in 1972, "Structures affected (and analogs of some human malformations) include the following: brain (anencephaly), spinal cord (spina bifida), face (cleft lip, cleft palate, micrognathia), eye (microphthalmia), all parts of the ear, teeth, salivary glands, aortic arch (malformations of several types), heart (ventricular septal defect), lungs, gastrointestinal tract (imperforate anus, omphalocele), liver and gallbladder, urinary system (renal "agenesis," hydronephrosis), genitalia, pituitary, thyroid, thymus, skull, vertebrae, ribs, extremities (phocomelia, digit malformations), muscles, and situs inversus."

Kalter and Warkany (4511) tested the suggestion that genetic modification of the malformations could be demonstrated by the use of 3 different strains of inbred mice, A/J, DBA/IU and C3H/J; pregnant females were given orally 10,000 IU vitamin A in a single dose on various days of pregnancy. No strain differences in type or frequency of induced congenital malformations were found. Abnormalities were numerous and generally those

previously seen in similar experiments, others, however were believed reported for the first time: supernumerary upper and lower incisors; ankyloglossia lateralis; cervical thymus, coronary aneurysm; crossed ectopic kidney; rectovesical fistula, and absent umbilical artery.

Moore (10741) reported in 1971 that small amounts of maternal retinol are transferred to the offspring in mice and rats. Parental and offspring liver retinol was determined under various conditions of diets given the parent; a maternal reserve of 200-300 micrograms retinol/g liver yielded offspring reserves of only 5 micrograms/g soon after parturition. Mothers raised on vitamin A-deficient diets for 3 months and given a single dose of 100 micrograms retinyl acetate before mating showed liver concentrations 10 days after parturition of only 0.4 to 1.4 micrograms/g. Sucklings showed 1 to 2.6 micrograms/g. With high maternal liver retinol concentrations, the maternal/fetal ratio may be 50 to 1; with low maternal retinol, a ratio of 1 to 1 may result.

Geelen (10507) recently (1972) used the fluorescent property of vitamin A to determine the localization of the vitamin given to pregnant rats. Doses of 50,000 IU vitamin A palmitate were given orally during different stages of pregnancy; mothers were sacrificed on 10th, 11th or 12th day of pregnancy. Serial sections of implants were examined by fluorescent microscopy and rated according to intensity of fluorescence. The vitamin-A appeared to penetrate only the giant cells, Reichert's membrane and the parietal yolk-sac epithelium. This was considered evidence of an indirect teratogenic effect on the embryo.

Electron microscopy revealed numerous abnormalities in decidual and trophoblastic tissues taken from an 8-day pregnant rat given 100,000 IU vitamin A palmitate subcutaneously and sacrificed 5 hours later. The report by Morriss (10746) described cells irregular in shape; abnormal nuclei; vacuolate endoplasmic reticulum cisternae; swollen mitochondria; distorted erythrocytes and leukocytes, etc. A second study by Morriss (10747) described numerous malformations in young removed at day 20 from treated rats: exencephaly; eye malformations; cleft palate, facial and limb abnormalities, etc. Electron microscopy of tissue preparations from affected embryos showed findings similar to those of the former report.

Tissue differentiation in 13-day embryos from rats given 60,000 IU vitamin A orally during days 10, 11, and 12 of pregnancy by the use of injected (intracardiacally) tritiated thymidine was studied by Kochhar (4820). The thymidine was injected early on the 13th day and the embryos removed from the sacrificed mother two hours later. The uptake of thymidine served as a measure of cell proliferation. The embryonic tissues were sectioned and placed on beta-sensitive emulsion type slides for 6 weeks, then scanned microscopically. Liver, loose cephalic mesenchyme and posterior palatine shelves showed major differences between treated and control tritium-labelled cells; treated tissues uniformly showed fewer labelled cells. Mitotic inhibition appeared to be a major effect of hypervitaminosis A.

Giroud and Martinet (3192, 3198) have presented in several papers detailed reviews of the status of teratogenic studies up to the year 1956. Characteristic malformations induced in rats are described, particularly the nature of anencepholia.

Murakami and Kameyama (6537, 6538) introduced 15,000 IU vitamin A intraperitoneally into two mouse strains during various stages of pregnancy. Fetuses were removed at 19 days and examined for a particular anomaly - the oculodentofacial pattern. Micromoelias were also recorded.

Comparisons of hairless and normal mouse strains given moderate doses of 1200-5000 IU vitamin A orally or intramuscularly daily were reported by Mauer (5924). Chronic oral doses for 6 months and the intramuscular treatments for up to 6 weeks resulted in little difference between hairless and normal mice, although the hairless females produced defective young from intramuscular treatment which were never seen as spontaneous malformations in the stock mutant hairless mice.

Vichi et al. (9446) have reviewed the major findings of investigators up to 1965, thus extending the review of Giroud and Martinet reported ten years earlier. Very little new material was cited, the malformations being generally those repeatedly reported. The effects of hypervitaminosis A in different animals at different dosages and methods of administering the vitamin were discussed comprehensively.

Giroud and Martinet (3206) reported in 1962 that they found malformations in mice embryos at relatively small doses of vitamin A; 100-500 IU given daily for three days during pregnancy resulted in abortions, resorptions and malformations. The lowest dose, 100 IU, produced abortions, death and resorptions, but no malformations. Sharer (10763) and Rossbach, from the same source, found that doses of at least 150,000 IU/kg body weight were required to produce fetal mortality and malformations in the young of mice and rats, whereas the 100 IU dose of Giroud and Martinet was only about 2500 IU/kg.

The investigator usually credited with the first demonstration of the teratogenicity of hypervitaminosis A is Sidney Cohlan (1757), who in 1954 reported the results with rats. Cohlan experimented with adult animals to study skeletal effects of large doses of the vitamin and observed that offspring of pregnant females often showed congenital malformations of the type since confirmed by numerous experimenters. Cohlan and Stone (1758) reported findings of experiments to demonstrate interaction of vitamin A with various endocrines: vitamin A given in doses of 25,000-60,000 IU together with the growth hormone showed no influence on the teratogeny of the vitamin by the hormone; parathyroidectomized animals responded to the vitamin essentially as did controls; no differences were seen in thymectomized rats; cortisone and insulin given concurrently with vitamin A produced no effects different from hypervitaminosis A alone; and similarly, adrenalectomies produced no changes.

The incidence of goitres was reported by Takekoshi (8956) to be in-

creased by simultaneous doses of methylthiouracil and vitamin A in Wistar rats. Adrenal weights were also increased, as were malformations of offspring of mice given both the drugs.

Marin-Padilla (5794) in 1966 studied the effects of hypervitaminosis A on pregnant hamsters as affecting presomite and non-segmented mesoderm in very young embryos. Vitamin A, 20,000 IU, was given orally on the 8th day of gestation; uteri of animals sacrificed at 3 hours, 6, 8, 10 and 12 hours after treatment were dissected and decidual tissues with embryonic tissues were examined microscopically. At 3 hours, no changes were seen; at 6 hours, minimal changes in cephalic mesoderm; at 8 hours, greater alterations of cephalic tissues; at 10 hours, all mesodermal elements were affected by shrunken cellular cytoplasm and reduced mitotic activity; and at 12 hours, some recovery was evident but damage was still present. Marin-Padilla and Ferm (5793) had performed ground-work experiments for the foregoing report a year earlier with hamsters given the same treatment, but sacrifice of the parent occurred at 6, 12 and 24 hours, and 4, 5 and 6 days. Only in later (4, 6 days after treatment) embryos were the characteristic malformations seen, particularly cranioschisis and occult sacral rachischises. Ferm (2709) reported in 1967 that placing pregnant hamsters, 7 days after fertilization, in low temperatures (0-2$^{o}$C) at 8 hours or 24 hours before administering 20,000 USP vitamin A, and then returning the animals to room temperature at 9 days of gestation, resulted in a marked increase in embryo resorption. Additional, major malformations not previously observed in hypervitaminosis A alone were seen: sympodia of lower extremities; combined severe lumbosacral spina bifida; eventration of anterior abdominal wall; and marked exencephaly. Ferm (2710) later reported a twin-set or conjoined twins recovered at the 9th day of gestation from a hamster given 20,000 IU vitamin A. The twins were joined at the thorax and development lagged about half a day behind normal time. Monozygous twinning was regarded by Ferm as itself "a manifestation of a developmental malformation."

Robens (7705) recently (1970) confirmed and extended past studies on hamster and guinea pig teratogeny, showing that higher doses of vitamin A produced additional abnormalities which could be demonstrated by permitting the young to survive to term. Robens reported extremely retarded limb and tail development, imperforate ani, hydronephrosis and anephrosis, none of which were reported in earlier hypervitaminosis A studies.

Doses of 10,000 IU vitamin A given orally to pregnant mice on the 14th and 15th days of gestation, together with a single injection of tritiated thymidine, were reported by Langman and Welch (5158) to inhibit mitosis and DNA synthesis in, and produce a resultant underdevelopment of, the cerebral cortex. Similar effects were seen in CNS of embryos of treated Wistar rats and of mice. Failure of the neural groove to close was the most significant effect; exencephaly appeared in 26% of the rat studies and a few myeloschisias.

Comparisons of vitamin A and cortisone treatments in rats, producing a high incidence of cleft palates, were reported by Kochhar and Johnson

(4817), who performed only the vitamin A experiments. The effect of vitamin A on mucopolysaccharide formation by administering an intraperitoneal injection of $S^{34}$-sodium sulfate following vitamin A doses of 60,000 IU was examined. Embryos from treated female rats sacrificed at 15-20 days of gestation were serially sectioned and autoradiographed. In all cases, palatine shelves were deformed and more $S^{35}$ was found fixed in the tissues of treated embryos than in controls. Lotosh (10698) gave pregnant mice 35,000 IU vitamin A orally on one of days 7 to 14 of pregnancy and at day 17, embryos showed about 67% cleft palates, 14% upper jaw anomalies and 60% lower jaw anomalies.

Yamaguchi (10052) demonstrated that rats given both vitamin A and cortisone (30,000 IU vitamin A/100 g body weight; 10 mg/100 g cortisone) on days 10 to 13 of pregnancy and sacrificed on day 21, produced more abnormalities in embryos than either drug alone. Krastits'ka (10655) reported similar results in rats given both drugs, but pretreated by 6-methyl-thiouracil to create a condition of hypothyroidism. Palate formation disruption and other teratogenic effects of the combined cortisone and vitamin A under hypothyroid conditions were more pronounced than in animals with normal thyroid function.

An hypothesis that vitamin A teratogenicity was due to an effect on DNA synthesis was tested by Germain and Berry (10509) recently (1973). Vitamin A (2500 IU) or tetracycline (25 mg/100 ml drinking water) was given to pregnant mice 3 days before the birth of young whose tooth size or increased frequency of missing teeth should reflect an interference in DNA synthesis. The results were negative; treated and control teeth from young sacrificed at 5 weeks were not significantly different.

Limb deformities, phocomelia and micromelia, were induced in the embryos of pregnant mice given 80 mg/kg retinoic acid orally on one of days 10 to 16 of gestation by Kochhar (10644) recently. Fetuses taken on the 18th day showed limb defects of a type and severity directly related to the developmental stage of the embryonic limb bud at the time of treatment. Cleft palate also was induced; 68% of fetuses with the deformity when treated at 10th day of gestation, and 100% when treated on the 12th day of gestation.

An unusual eye deformation in an offspring of a DBA/IJ mouse given 40,000 IU vitamin A palmitate at about 8-plus days after fertilization, was described by Kalter (4512) in 1964. The offspring was removed from the mother 2 days before term. The left eye was microphthalmic; the right eye appeared as a vesicular structure composed almost entirely of thick retina, without lens, iris, cornea, anterior chamber, pupil or ciliary body. The retina showed an extensive coloboma, or fissue.

Pregnant female Long-Evans rats given 30 mg retinoic acid orally on day ten of gestation produced embryos, which when collected on days 10-plus to 12-plus, showed absent and abnormal umbilical artery developments, according to report by Monie and Khemmani (10739). Apparently, the key

factor in the genesis of the missing umbilical arteries is in the failure of the vitelloumbilical anastomosis to disappear as it does in normal embryonic development, at about day 11; thus the distal portions of the definitive umbilical artery do not develop.

Giroud and Martinet (3198) reported that rabbits appeared to be more sensitive to hypervitaminosis A than rats. Doses of 125,000 to 500,000 IU, or about 47,000 IU/kg body weight to 150,000 IU/kg. The latter dose produced total abortions, and 80,000 IU/kg produced 50% abortions and some characteristic malformations. In rat studies, doses that resulted in 50% abortions also produced very large numbers of abnormalities. A later paper by Giroud and Martinet (3201) included studies of cavies (guinea pigs) as well as of rabbits and mice; doses of 50,000 IU vitamin A given pregnant cavies at days 12 to 14 of pregnancy produced a high percentage of abortions and some abnormalities. One case of total fissure of the inferior maxillary with anterior doubling on the tongue was seen.

Among the factors which influence teratogenic responses to hypervitaminosis A may be strain or subspecific differences; Nolen (6798) examined the strain-different responses in three strains of rats, Sprague-Dawley, Charles River and Wistar. Females given daily oral doses of 0, 50,000 IU or 75,000 IU vitamin A on days 6-15 of pregnancy produced young, taken at 21 days, showing gross abnormalities. These were examined particularly for skeletal deformities. Both Sprague-Dawley and Charles River rats were more sensitive to both dosage levels than were Wistar strain animals; the relative incidence of and pattern of malformations were greater in the former two strains. Skeletal deformities of consequence were not seen in any of the animals tested, but minor variations in rib numbers and sternebrae were observed.

Numerous studies have demonstrated that vitamin A is essential for the normal functioning of all epithelial tissues. Avitaminosis A results in keratinization of mucous epithelia and hyperkeratotic changes in skin surrounding hair follicles. Hypervitaminosis by parenteral administration yields erythema, exfoliation, and in severe cases, a generalized exfoliative erythroderma. Jarret and Spearman (4305) have presented a discussion of the action of vitamin A on the skin, particularly in the treatment of skin disorders; topically applied, the vitamin produces erythema and epidermal thickening. Chronic psoriasis and ichthyosis have been to some degree successfully treated with vitamin A. Studer and Frey (8793) reported about 20 years earlier that skin diseases, pityriasis, Darier's disease and ichthymosis were treated with doses of 100,000 to 400,000 IU daily for several weeks.

Jewell and others (4347) injected rabbits intracutaneously with 1500 IU vitamin A palmitate and studied histologically skin specimens taken at various times (1 to 28 days) after injection. Both number and size of germinative and granular cells increased beyond normal, resulting in a thickened epidermis. The corneum was thinner and compacted.

Pinkus and Hunter (7238) gave daily, buccal doses of vitamin A to ten healthy human volunteers for 30 days to test the influence of the

vitamin on normal skin versus skin with the keratin layer stripped-off (with Scotch tape). The stripped cells were counted microscopically before the treatment and after treatment; in each case, the cell-counts were decreased by the treatment and mitotic activity decreased in 7 of the 10 subjects. Vitamin A in large doses apparently retards keratinocytic maturation. Sherman (8357) demonstrated in Wistar rats that either avitaminosis or hypervitaminosis A produced a reduction in corneal, epidermal and tracheal epithelial mitotic indices. Smaller doses of vitamin A given either orally or topically increased the epithelial mitotic indices; it was concluded that vitamin A is a factor in regulating the mitotic activity of epithelial cells. Bern and Lawrence (772) reviewed the experimental literature appearing from 1922 to 1960 on studies of the effects of excess vitamin A on keratinization; in brief, low doses create hyperplasia; intermediate doses produce parakeratosis. High levels result in a reversible mucous metaplasia; massive doses produce epithelial death.

Bern et al. (771) performed several experiments with Long-Evans rats, given topical vitamin A (1000 IU vitamin A alcohol) and subcutaneous doses. Tissue samples were studied with polarizing and electron microcopes. Biochemical analyses of skin samples were done - polysaccharide, nucleic acid, sulfhydryl and disulfide groups determined. Male guinea pigs were used to study estrogen versus vitamin A topical effects on nipple areas. Acanthosis was seen, the tonofibril system was unaffected, and hyperplasia was induced by topical vitamin A. No interference to nipple region epidermal response to estrogen by vitamin A was detected.

Tissue samples from skin, organ parenchymal tissues, trachea and urinary bladder were studied in rats given diets deficient in vitamin A or supplemented with 20, 40 or 80 micrograms of the vitamin by Vedrova and Sapelkina (9411). The lower doses (20 and 40) produced no significant changes in epithelial tissues. The dose of 80 micrograms vitamin A produced an epidermal thickening, a proliferation of the basal epidermal layer and increased granular layer. Other abnormal changes were seen in both the vitamin A-deficient animals and those with hypervitaminosis.

Moore and Wang (6329) observed the effects of hypervitaminosis A on gestation in the rat, at a time (1945) when the teratogenic effect on the embryo had not yet been appreciated. Vitamin A acetate, 45,000 IU was added to the diet of pregnant rats; doses of from 30,000 to 40,000 IU as the halibut-liver oil were also given. Extensive uterine haemorrhage and resorption resulted. Smaller doses given from the time of fertilization resulted in only one of six treated females showing uterine haemorrhage, a single resorption and a total of 4 litters (some dead) without uterine haemorrhage. The haemorrhage was seen only when hypervitaminosis A was induced within 10 days after fertilization.

Three experiments with rats were described by Berdjis (751), who administered 100-300 IU vitamin A alcohol/g body weight either before, during or after pregnancy. A total of 123 offspring were produced and were studied for 4 months. Low doses of the vitamin gave no significant results; offspring of parents given high doses showed more or less severe

congenital malformations. Growth of survivors was retarded; at 4 months they were scarcely half the size of normal animals.

Adult male rats were given 30,000 IU vitamin A by intramuscular injection daily for 6 weeks by Biswas and Deb (895) to observe the effects on the testes. Animals were sacrificed either at the end of 6 weeks or were permitted to live an additional 15 days after withdrawal of the vitamin. Samples of tests showed histological evidence of decreased spermatogenic activity, shrunken seminiferous tubules, etc. Histochemical analyses indicated that lipid, plasmal and cholesterol levels were raised in interstitial and Sertoli cells; esterase activity, phosphatase and dehydrogenases were decreased. Accessory organs (sex) were atrophied. A later paper by Biswas and Murherji (896) reported similar experiments carried out several weeks longer and with the emphasis on effects on anterior pituitaries. Histochemical studies of pituitary sections indicated an inhibition of gonadotropic secretion (FSH and LH); increased ACTH or decreased TSH caused by hypervitaminosis A was cited as a possible cause of the decreased gonadotropic activity.

Oral doses of 37,500 IU vitamin A given every 3 days to virgin female albino rats by Mavligit and Gitlin (5925) produced a premature opening of the vaginal membrane. Proteolytic lyosomal emzymes released by the treatment were suggested as possible explanations as increasing the permeability of certain membranes.

The effects of vitamin A on impregnation and implantation of the ovum in female rats were reported by Laschet and Weise (5184). More than 400 rats were used, and 30,000 IU doses of vitamin A were given by gastric tube. Eleven days after mating, the females were sacrificed and fertility rates determined. In each case a single dose was given pre-estrus, and some animals received additional doses on succeeding days. Fertility in single, pre-estrus treatment rated 72% pregnancy; a second dose lowered the fertility to 70% pregnancies, and after 5 successive doses, the fertility rate had dropped to 57%. It was concluded that fertilization of the ovum was not disturbed, but that implantation was prevented by the vitamin treatment due to inhibition of the uterine epithelial differentiation.

Considerable research has been performed in attempting to elucidate the actual mechanism whereby excessive vitamin A exerts its action on skeletal tissue.

Wolbach (9954) was the first to present a detailed study of the changes effected in skeletal tissues by excessive vitamin A. In young rats and guinea pigs he found rapid consumption of epiphyseal cartilage with greatly premature closure of epiphyses; also, excessive rapidity of remodeling processes unrelated to linear growth of bones, but definitely related to rate of epiphyseal-cartilage-cell cytomorphosis. Substitution of compact bone for cancellous bone in conformity to normal growth patterns was observed to be greatly accelerated. In summation, Wolbach suggested that excessive vitamin A evokes an acceleration of normal growth sequences in long bones.

Tissue culture studies conducted by Fell and Mellanby (2675) indicate that the action of vitamin A on skeletal tissue in vitro is direct. In cultures of limb-bone rudiments of chick embryos and fetal mice, excessive vitamin A caused a rapid dissolution of the intercellular material. This action was demonstrated to be mediated through the living cells of the tissue, rather than directly upon the intercellular material.

On the basis of autoradiographic studies in which chick limb-bone explants treated with labeled inorganic sulfate showed that the loss of metachromasia is preceded by an inability of the cartilage to fix sulfate and is accompanied by a loss of the sulfate already present, Fell et al. (2681) suggested that under the influence of excessive vitamin A, cartilage cells may produce an enzyme which results in the formation of a soluble sulfated mucopolysaccharide, instead of the normal chondroitin sulfate, and in the dissolution of existing matrix.

McElligott's studies (5997) of hypervitaminotic rabbits led him to conclude that the depletion of chondroitin sulfate from articular and epiphyseal cartilage results from an inhibition of chondrocyte function (chondroitin sulfate synthesis), matrix breakdown being a secondary effect.

In opposition to the suggestions of Wolbach (9954), Clark (10320) proposed, after studying the epiphyseal plates of hypervitaminotic kittens, that excess vitamin A retards the growth of epiphyseal plates by affecting the rate of formation of new chondrocytes and, either directly or indirectly, the maximum size reached by the chondrocytes in the hypertrophic cell zone.

Thomas et al. (9077) observed a remarkable similarity in the changes produced in rabbits by papain and by vitamin A, and therefore suggested that the changes in cartilage produced by administration of vitamin A may be the result of activation of a proteolytic enzyme or enzymes with properties similar to those of papain. In vitro studies by Fell and Thomas (2684) supported this conclusion.

By measuring the DNA content of cultured limb-bone rudiments from chick embryos, Dingle et al. (2196) determined that the inhibition of growth produced by excessive vitamin A was mainly due to a substantial reduction in the amount of intercellular material rather than in the number of cells.

Studies conducted by Fell and Dingle (2690) on chick limb-bone rudiments and by Rodahl et al. (7739) on intact rats indicated that under the influence of excess vitamin A, chondrocytes produce an enzyme which acts on the matrix by breaking down the protein moiety of the protein-mucopolysaccharide complex.

Epsilon-aminocaproic acid, which is known to inhibit the acid protease of cartilage, was shown by Fell (2692) to largely prevent the action of vitamin A on the cartilage matrix.

In vitro treatment of isolated lysosomes from embryonic chick cartilage,

as well as from rat liver, with high levels of vitamin A has been shown to cause rapid release of hydrolytic enzymes (2197, 2690). Similar changes in lysosomal stability in response to excess vitamin A have been demonstrated in intact rats, rabbits and guinea pigs (10433, 9707, 9706).

Hydrocortisone, which has been shown to stabilize lysosomal and other membrane systems, greatly retards the effects of vitamin A on bone and cartilage in vitro (2686, 9707), as well as in vivo (9079).

Hypervitaminosis A has been observed to result in man and in dogs in a reversible increase in cerebrospinal fluid (CSF) pressure, which is often characterized, especially in infants, by swelling in the areas of the fontanels (5785, 6339, 10233). Becker and Sutton (689, 8854) suggested that this action was effected through an alteration in the cellular integrity of the choroid plexus tissue, with a consequent overproduction of CSF.

However, decreased CSF pressure has been observed in cases of hypervitaminosis A in rats (10707), dogs (10586), pigs (10586), and calves (1374, 2924, 4163). Decreased CSF production, increased CSF absorption, and increased CSF space resulting from thinning of the skull bones are currently supported explanations for this phenomenonn (1374, 3456, 4163, 10707, 2924).

The metabolism of retinol and the retinyl esters has been studied extensively and considerable knowledge of the mechanisms involved has been compiled. Full understanding of the mechanisms, however, is yet to be attained.

Upon ingestion, vitamin A is actively absorbed, primarily through the duodenum and jejunum, in the following manner: partial hydrolysis of dietary retinyl esters to retinol by a pancreatic hydrolase while still present in the lipid phase; uptake of both retinol and retinyl esters from the micellar phase by the brush border of the mucosal cells; hydrolysis of the retinyl esters by a hydrolase located on the outer surface of the brush border; transfer of the retinol into the mucosal cells; re-esterification of the retinol, preferentially with palmitic acid, inside the cell. The retinyl esters are then transported via the lymphatic system and the thoracic duct to the blood stream (10806, 10878, 10934).

The newly absorbed esters are taken uup by the liver, where they are hydrolyzed and then re-esterified before being stored in the liver low-density proteins. Retinol is stored in the liver in the form of retinyl esters, predominantly retinyl palmitate, to the extent of 85-95% of the total, with 5-15% of the retinol in free form. Hepatic stores of vitamin A are considered to be in a state of continuous turnover; half-lives of 57 and 48 days have been reported for hepatic vitamin A in the rat and the steer, respectively (3753, 8315, 10806, 10878, 10934).

Tracer studies have shown that retinol derivatives recycle between the liver and the gut in an enterohepatic circulation similar to cholesterol (10934, 10119, 10121).

Upon hydrolysis of the retinyl esters stored in the liver, retinol is released into the blood, where it is transported to other parts of the body bound to a specific transport protein, retinol-binding protein (RBP), which is further complexed with a prealbumin. Retinol transport is considered to proceed via dissociation of RBP from prealbumin after the stabilization of RBP-prealbumin under physiological conditions, followed by extrusion of retinol from RBP, deposition of retinol in a target cell and excretion of free RBP in urine (10806, 10878, 10934).

Three pathways of retinol and retinoic acid metabolism in the rat were postulated by Roberts and DeLuca (7706). In the first pathway, the isoprenoid chain is maintained intact, yielding retinoyl and retinyl glucuronide derivatives. Pathway II involves the oxidative decarboxylation of the terminal carbon atom of the side chain, with the production of a metabolite which is shorter by one carbon. In the third pathway the side chain is oxidized to some point between the 7 and 14 positions.

A diminution of the basal metabolic rate was observed by Sadhu and Brody (7938) and by Veil et al. (9418) upon inducing hypervitaminosis A in rats. Liver and muscle metabolism in rats was likewise found by Ray and Sadhu (7569) to be depressed by excessive vitamin A. Sampson et al. (7994) reported that oxygen consumption of rats was also affected by vitamin A; decreased at 200 IU/g body weight, increased at 300 to 525 IU/g body weight. Increases in liver glycogen were found by Kumar et al. (5077) and Singh et al. (8504, 8508) in rats fed excessive vitamin A.

Feeding excessive vitamin A to rats was found by Kryukova (5045) to cause a reduction in the total protein in the blood serum and liver, as well as an absolute and relative hypoalbuminemia.

Hypervitaminotic rats were observed by Nerurkar and Sahasrabudhe (6708) and Khogali (4707) to exhibit a negative balance for calcium, phosphorus and nitrogen.

In a series of studies on the effect of hypervitaminosis A on lipid metabolism in the rat, Misra (6219, 6220, 6221, 6222, 6223, 6226) outlined the changes produced in the lipid concentrations of the brain, intestines, kidneys, spleen and liver. Lipid changes in hypervitaminotic humans were discussed by Van Bruggen and Straumfjord (9346) and Pallota and Krause (6986).

In the rat, excess vitamin A has been shown to inhibit mucopolysaccharide biosynthesis in cartilaginous tissue, soft connective tissue, blood platelets, normal and inflamed subcutaneous tissues, and liver tissue (2675, 2681, 5997, 9954, 1686, 5985, 665, 4850).

Increased coagulation time, associated with decreased levels of prothrombin and coagulation factors II, V, VII, and X, has been observed in hypervitaminotic rats (5423, 7301, 4249, 10915).

Dingle and Lucy (2198) and Glauert (3217) have reported that isolated

erythrocytes are rapidly hemolyzed by vitamin A in vitro. The changes in fine structure during hemolysis were described by Glauert (3217).

The consumption of excessive vitamin A by rats was reported by Ventura et al. (10994) to cause considerable changes in the cardiac intracellular action potential, as well as an increase in spontaneous heart rate.

There is reportedly an interaction between vitamin A and several other vitamins. Vitamins A and D diminish the toxic effects of each other. Depending upon dosage, vitamin E spares the toxic effect of vitamin A or exerts a sparing action on vitamin A. It has been suggested that hypervitaminosis A causes deficiencies of vitamins C, E, and K (6339, 3681, 10567).

# VITAMIN A

## Chemical Information

### I. Nomenclature

#### A. Common Names

1. Retinol
2. Vitamin A alcohol
3. Vitamin $A_1$
4. Anti-xerophthalmic vitamin
5. Anti-infective vitamin
6. Axerophthol
7. Oleovitamin A
8. Biosterol
9. Lard factor

Many commercial preparations are mixtures of retinol (all trans configuration), a cis-isomer of vitamin A, and the acetate and palmitate esters:

1. Vitamin A acetate
2. Vitamin A palmitate
3. Neovitamin A
4. Retinyl acetate
5. Retinyl palmitate

#### B. Chemical Names

1. Retinol: 3, 7-dimethyl-9-(2,6,6-trimethyl-1-cyclohexene-1-yl)-2,4,6,8-nonatetraen-1-ol.

2. Neovitamin A: 2-cis-vitamin A

#### C. Trade Names

1. Acon
2. Apexol
3. Apostavit
4. Atav
5. Avibon
6. Avita
7. Avitol
8. Axerol
9. Dohyfral A
10. Epiteliol
11. Arovit (vitamin A acetate)
12. Myvax (vitamin A palmitate)
13. Nio-A-Let
14. Prepalin
15. Testavol
16. Vaflol
17. Vi-Alpha
18. Vitavel A
19. Vitpex
20. Vogan
21. Vogan-Neu

D. Chemical Abstracts Unique Registry Numbers

| | |
|---|---|
| Vitamin A alcohol: | 000068268 |
| Vitamin A acetate: | 000127479 |
| Vitamin A palmitate: | 000079812 |

II. Empirical Formulae

| | |
|---|---|
| Retinol: | $C_{20}H_{30}O$ |
| Retinyl acetate: | $C_{22}H_{32}O_2$ |
| Retinyl palmitate: | $C_{36}H_{60}O_2$ |

III. Structural Formulae

Vitamin A - Retinol

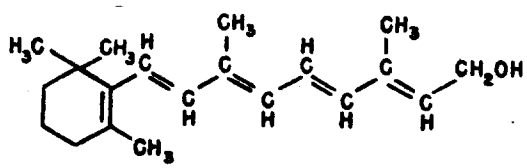

Vitamin A Acetate - Retinyl Acetate

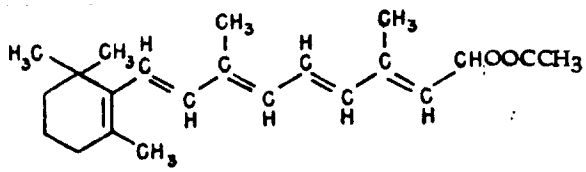

Vitamin A Palmitate - Retinyl palmitate

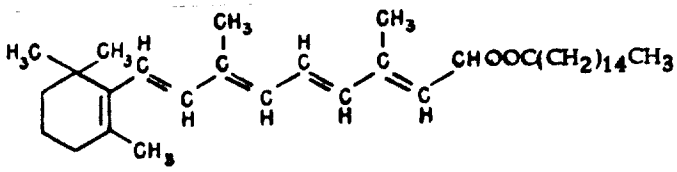

IV. Molecular Weight

| | |
|---|---|
| Retinol | 286.4 |
| Retinyl acetate | 328.4 |
| Retinyl palmitate | 524.4 |

V. Specifications

A. Chemical

The fluorescent properties of vitamin A and its derivatives are so characteristic that they should, perhaps, be included among the chemical (more correctly physico-chemical) specifications (6340).

| Compound | Solvent | T(°C) | Wave length mμ excitation | emission | Relative Intensity |
|---|---|---|---|---|---|
| | Drexane | ca. 25 | 334 | 476 | 1.00 |
| | Cyclohexane | " | 330 | 478 | 0.71 |
| | Ethanol | " | 325 | 480 | 0.36 |
| | Chloroform | " | 330 | 478 | 0.27 |
| | Acetone | " | 336 | 482 | 0.18 |

Retinol: All trans configuration: C:83.86%

H:10.56%

O: 5.59%

Biopotency = $3.33 \times 10^6$ I. U. /g

Retinyl Acetate: Biopotency = $2.904 \times 10^6$ I. U. /g

Retinyl Palmitate: Biopotency = $1.817 \times 10^6$ I. U. /g

Neovitamin A has the same biopotency as retinol as measured by the U.S.P. growth method in rats (Merck).

B. Food Grade (Food Chemicals Codex)

A suitable form or derivative of retinol ($C_{20}H_{30}O$; vitamin A alcohol). It usually consists of retinol or esters of retinol formed from edible fatty acids, principally acetic and palmitic acids, or mixtures of these. It may be diluted with edible oils, or it may be incorporated in solid edible carriers, extenders, or excipients. It may contain suitable preservatives, dispersants, and antioxidants, providing it is not to be used in foods in which such substances are prohibited.

Assay: Not less than 95 per cent of the vitamin A activity declared on the label.

Absorbance ratio (corrected/observed at 325 mu). Not less than 0.85.

VI. Description

A. General Characteristics

Retinol:

1. When isolated by low temperature fractionation from methanol; yellow needles containing methanol of crystallization: m.p. 7.5 - 8°C.

2. When isolated by molecular distillation and subsequent low temperature recrystallization from ethyl formate: yellow prisms, solvent free; m.p. 63 - 64°C.

3. In liquid form, a light yellow to red oil that may solidify when cooled. In solid form the appearance is determined by the diluent employed. The mixture or solution may be odorless or may have a mild fishy odor, but has no rancid odor or taste.

Retinyl acetate:

Pale yellow prisms obtained by crystallization from methanol solution. m.p. 57 - 58°C.

Retinyl palmitate:

Yellow amophors or crystalline form. m.p. 28 - 29°C.

Neovitamin A:

Pale yellow needles isolated from ethyl formate solution; m.p. 58 - 60°C. Neovitamin A and its esters react with maleic anhydride at a much slower rate than retinol.

Retinol, neovitamin A and the ester derivatives exhibit strong yellow-green fluorescence under U.V. radiation, while undergoing destruction.

B. Physical Properties

Retinol:

The crystals of retinol are isotropic and fairly stable when heated at moderate temperatures in the absence of oxygen and light.

| | |
|---|---|
| Absorption maximum: | = 324-325 mu (ethanol) |
| Optical rotation: | $\pm 0^{o}$ |
| Extinction coefficient: | $E^{1\%}_{1cm}$ = 1835 |
| Refractive Index 22°C: | $N_D$ - 1.6410 (calculated from refraction indexes of 20-70% solutions in mineral oil). |
| Solubility: | It is soluble in most organic solvents, e.g., chloroform, ether, methanol, ethanol and vegetable oils. It is insoluble in water and in glycerin. |

Retinyl acetate:

| | |
|---|---|
| Absorption maximum: | = 326 mu (ethanol) |
| Extinction coefficient: | $E^{1\%}_{1cm}$ = 1550 |
| Solubility: | like retinol |

Retinyl palmitate:

| | |
|---|---|
| Absorption maximum: | = 325 - 328 mu (ethanol) |
| Extinction coefficient: | $E^{1\%}_{1cm}$ = 940 - 975 |
| Solubility: | like retinol |

Neovitamin A:

| | |
|---|---|
| Absorption maximum: | = 328 mu (isoproponol) |
| Extinction coefficient: | $E^{1\%}_{1cm}$ = 1673 |

C. Stability in containers, animal feeds, etc.

The free alcohol (retinol) is inactivated by U. V. radiation and will lose potency when exposed to air oxidation: Neovitamin A is somewhat more resistant to air oxidation.

In general oil solutions of vitamin A are extremely stable, while the ester forms show superior stability to retinol (Merck). The acetate has similar properties to the palmitate except that it is less stable in the presence of moisture. Both the acetate and palmitate are available in potency standardized oil solutions, emulsions and beadlets. Beadlets are dried emulsions in a water dispersible matrix. Vitamin A is unstable in many applications and antioxidants are necessary to obtain a reasonable shelf life. Dry mix products are generally not a problem. Beadlets containing antioxidants generally lose about 0.5 potency per month. Vitamin A degradation in beadlets follows first order kinetics.

Vitamin A oil can be emulsified directly into condensed skim milk prior to spraying, but stability is not satisfactory unless triglycerides are added. Approximately 0.1 - 2% coconut oil or other stable oil by weight of milk solids is required to obtain maximum stability, e.g. 10% loss in 12 months at 75°F.

Foods receiving severe heat treatment during processing should preferably be fortified with vitamin A after heating. The vitamin A can be added by spraying an oil/water emulsion onto the surface of the cooked product; e.g., breakfast cereal. The water phase should contain a film forming solute such as sucrose or corn syrup solids capable of forming an oxygen barrier. Better than 90% retention after six months at room temperature can be obtained with this procedure using a vitamin A palmitate emulsion containing suitable antioxidants.

Vitamin A stability studies in frozen drink concentrates have demonstrated somewhat erratic results. Most studies indicate losses of 5 - 10% in 12 months at -10°F, but occasional samples have losses as high as 30% (Handbook of Food Additives).

Stability in oleagenous foods, e.g. margarine, is excellent. Stability is good in vegetable oils with antioxidants but not during cooling. Antioxidants have little efficacy when oil is heated at frying temperature (Table 1).

TABLE 1
Vitamin A Palmitate Stability in Vegetable Oils at 350°F [304]

| | Initial | 5 Minutes | | 10 Minutes | | 15 Minutes | | 30 Minutes | |
|---|---|---|---|---|---|---|---|---|---|
| | USPU/lb | USPU/lb | % Ret | USPU/lb | % Ret | USPU/lb | % Ret | USPU/lb | % Ret |
| **Cottonseed Oil** | | | | | | | | | |
| No antioxidant | 23,000 | 21,000 | 91 | 20,000 | 86 | 16,000 | 70 | 8,500 | 37 |
| 5 mg BHA + 5 mg BHT/MU | 25,000 | 22,000 | 87 | 20,000 | 82 | 16,000 | 64 | 7,900 | 32 |
| 25 mg BHA + 25 mg BHT/MU | 24,000 | 25,000 | 100 | 21,000 | 88 | 21,000 | 86 | 9,200 | 38 |
| **Olive Oil** | | | | | | | | | |
| No antioxidant | 31,000 | 23,000 | 74 | 18,000 | 58 | 11,000 | 35 | 4,200 | 14 |
| 5 mg BHA + 5 mg BHT/MU | 29,000 | 25,000 | 86 | 17,000 | 59 | 11,000 | 38 | 4,000 | 14 |
| 25 mg BHA + 25 mg BHT/MU | 30,000 | 25,000 | 83 | 13,000 | 43 | 11,000 | 37 | 3,300 | 11 |

Vitamin A is surprisingly stable in baking bread. Palmitate beadlets can be used with resulting stability of 90 - 100% after baking white bread by the standard AACC procedure. After five days storage at room temperature retention is 85 - 95%. Similar results were obtained in baking tortillas and chapaties.

Vitamin A is stable in milk processing, but prolonged heating of milk or butter at high temperature in the presence of air results in a considerable decrease in vitamin A activity. Frying liver from calves, chickens, etc. causes losses of 10 - 20%.

Gelatin beadlets of retinyl palmitate have very superior stability when dispensed in such generic animal feeds as protein/mineral blocks, salt blocks, liquid molasses and drinking water. In general, 70 - 90% retention of potency over a three month period is claimed for beadlets in these feed types, in some instances even at temperatures of 100°F.

Retinol acetate dispersions at concentrations within the clinically used range have been found to be strongly sorbed (as much as 78% over a 24-hour contact period) onto flexible plastic ("Viaflex") bags used for administering intravenous fluids. The amount sorbed was found to depend on the contact time with the plastic and the dispersion media (10311).

## VII. Analytical Methods

### Spectrophotometric Method

Samples containing vitamin A are saponified and then ether extracted

to remove impurities. The non-saponified solutions are redissolved, generally in isopropanol and the ultra-violet absorbance of the solution is determined at 310, 325 and 334 mu. The vitamin A content of the samples is then calculated using an appropriate mathematical formula relating vitamin A concentration to the experimental parameters. When samples of a given batch containing vitamin A are evaluated among several laboratories the range of the limit of error is approximately ± 8%. In a given laboratory the assay precision is approximately ± 2%. This method is not applicable to animal feeds containing less than 500,000 IU/lb. of feed (U.S. Pharmacopea).

The Carr-Price Method

After isolation of the vitamin from its carrier it is dissolved in chloroform and antimony trichloride is added. The intensity of the resulting blue color is determined colormetrically at a wavelength of 620 mu. The vitamin A concentration is estimated from a standard curve prepared in advance. In estimating vitamin A in animal feeds with this method it is found to be sensitive to about 1,000 IU/lb. of feed and precision averages ± 6 - 10% (AOAC).

Colorimetric Methods

Trifluoracetic acid in chloroform, added to vitamin A yields a blue color similar to what one gets with the Carr-Price antimony trichloride reaction. This color is read at 616 mu and vitamin A is estimated from a standard curve. This method can be utilized as a macro method for sera where on the order of 2 ml is required or a micromethod which can detect vitamin A in a 50 microliter sample of sera. The reproduceability, which is the coefficient of variation, on samples containing approximately 50 micrograms of retinol per 100 ml of serum is 4% for the antimony trichloride and 3.8% for the trifluoracetic acid modification. Recoveries, when vitamin A acetate was added to samples of serum ranged from 93 to 98% for the trifluoracetic acid procedure (6674).

Fluorophotometric Method

The fluorometric detection of vitamin A has been achieved in volumes as small as 50 microliters of human sera. This represents a 20-fold increase in sensitivity over the standard spectrophotometric technique which is used at the milliliter level of serum. The sample is allowed to clot, treated with alcoholic KOH, warmed for 20 minutes to extract and hydrolyse vitamin A esters to the alcohol. The tubes are cooled and contents extracted with xylene. Xylene layer is separated and fluorescence measured in the Farrand fluorometer at 410 mu. The reliability of this method is comparable to the standard spectrophotometric method (8279).

Thompson et al. has devised a method for the determination of vitamin A in milk, butter, cheese and ice cream. Samples are saponified and

extracted with petroleum ether, and extracts measured fluorometrically. Recovery results are essentially quantitative from 2% fat milk fortified with vitamin A (10955).

Erdman et al. have modified the Thompson procedure to the analysis of vitamin A in food. The sample is homogenized or pulverized and saponified with KOH, and extracted with hexane. For low-fat foods 10 ml of the hexane extract is used directly for fluorometric measurement. Care must be taken to be sure that foods with high fat content are completely saponified. The hexane extract of high carotenoid foods should be chromatographed on alumina before photofluorometric measurements are taken (10465).

Thin Layer Chromatography

Human serum was extracted with petroleum ether-ethyl alcohol mixture and applied onto a chromatographic plate. The fractions identified after development by their absorbance, using a spectrophotometer, included beta-carotene, retinyl esters, retinol, retinal, and retinoic acid. The concentration of each of these fractions could be expressed as micrograms per 100 ml of serum. The recovery data for individual premeasured standards of each of these fractions was somewhat greater than 85%, while the recovery for the combined standards of these fractions was somewhat greater than 69% (8995).

Circular thin layer chromatography was applied to samples containing vitamin A where the developing solvent was a 4:1 mixture of cyclohexane and ether. Two different plate substrates were used, one $Al_2O_3$, the other $SiO_2$. In both substrates the error was ± 6%. When standards were applied to both these substrates the sensitivity was as follows: for $Al_2O_3$, a one microgram of Vitamin A could be detected; for $SiO_2$ 1.5 micrograms could be detected (3712).

Paper Chromatography

Vitamin $A_1$ and $A_2$ as well as derivatives of these materials were separated using reversed phase circular paper chromatography, in which the paper was impregnated with 3% vaseline and the developing solvent was 90% methanol. The bands were identified by their Rf values and by their absorption maxima under ultraviolet light (10252).

Column Chromatography

Column chromatography of vitamins A and D and cholesterol and coprosterol has been carried out on 62 - 100 mesh Teflon eluted with methanol.

The effluent was collected in 1.3 ml fractions. The ultraviolet absorption of each fraction was measured with a Beckman spectrophotometer (339).

Vitamin A and D were separated by column chromatography using a

Fluoropak 80 (20 to 40 mesh) substrate in a 77 cm x 12 mm column. The stationery phase was 2, 2, 4-trimethylpentane and the mobile phase was 90% methanol. Recovery was quantitative of both these vitamins at 4°C; at 25 - 30°C only a 73% recovery for vitamin A was achieved (1576).

Vitamins A and D were separated after extraction from foods, specifically margarine and eggs, by use of partition chromatography using Sephadex LH20 as the stationery phase, saturated with methyl alcohol-water. The mobile phase was 2,2,4-trimethylpentane (720).

Gas Chromatography

The application of gas liquid chromatography (GLC) as an analytical tool for the determination of the fat-soluble vitamins has yet to be utilized to its full potential. GLC methods to measure the vitamin A isomers have not been developed to any appreciable practical extent (10892).

## VIII. Occurrence and Levels

### A. Plants

None

### B. Animals

Vitamin A is found exclusively in animal tissues, and up to now there has been no proof of the existence in plant material of vitamin A or of its analogs. The animal organism appears to be the only one able to convert the provitamins A into vitamin A, there provitamins being principally alpha, beta, and gamma carotenes. Fish liver oils which are especially rich in vitamin A are the only natural source for commercial extraction. However, the livers of polar bears are now known to be the richest source of vitamin A so far identified. "They are so rich in this vitamin as to cause poisoning by hypervitaminosis when eaten by humans. As a matter of fact, 0.5 to 0.7 grams of polar bear liver per rat may kill." (7731).

In the following list the vitamin A level in a number of different liver oils is given, followed by the vitamin A content of various human organs:

## LEVEL OF VITAMIN A

| Source | i.u./g. |
|---|---|
| Swordfish liver oil | 200,000 |
| Mackerel liver oil | 130,000 |
| Salmon liver oil | 5,000 |
| Codfish liver oil | 600 |
| Halibut liver oil | 100,000 |
| Goose liver oil | 14,000 |
| Chicken liver oil | 20,000 |
| Human Heart | 1.4 (Wet tissue basis) |
| Human Kidney | 2.7 |
| Human Liver | 156 |
| Human Skin | 1.2 |
| Human Serum | 5 to 10 |

Milk is relatively rich in vitamin A as are all fat containing milk products. The yolk of eggs, too, are high in vitamin A content but both milk and egg products show seasonal variations in the liver of the vitamin (10878).

The following table gives the content of Vitamin A and Provitamin A in various foods (Handbook of Food Additives):

**Table 2.** Vitamin A and Provitamin A Content of Certain Foods, 10 IU/100g Food (44)

| Food | Vitamin A | Provitamin A |
|---|---|---|
| butter | 3,300 | |
| cheeses | 1,100-1,500 | |
| cream | 480-1,540 | |
| milk (whole) | 140-160 | |
| eggs (whole, raw) | 1,180 | |
| margarine | 3,300 | |
| calf's liver | 22,500 | |
| white fish (raw) | 2,260 | |
| halibut (raw) | 440 | |
| eel (raw) | 1,610 | |
| herring (raw) | 105 | |
| oyster (raw) | 310 | |
| apples (raw) | | 50 |
| apricots (raw) | | 2,500 |
| bananas (raw) | | 333 |
| oranges (raw) | | 84 |
| prunes (dried) | | 1,666 |
| asparagus (raw) | | 833 |
| broccoli tops (raw) | | 4,166 |
| cabbage | | 500 |
| carrots (raw, mature) | | 20,000 |
| cauliflower (raw) | | 50 |
| lettuce (raw) | | 1,666 |
| parsley (raw) | | 13,333 |
| pumpkin (raw) | | 2,500 |
| spinach (raw) | | 10,000 |
| watercress (raw) | | 5,000 |

C. Synthetics

Recent years have seen a trend toward the enriching of a variety of human and animal food materials with vitamin A, either produced synthetically or isolated and concentrated from natural sources. Because of this, edible materials which would normally show very low or zero levels of vitamin A may contain considerable concentrations of the substance. Animals whose feeds are now routinely enriched with the vitamin include among the poultry broilers, layers, breeders, turkeys, starter and finisher, and turkey breeders. It is given to swine at all stages, and to ruminants, including dairy cattle and sheep, and steers. Also, to pheasants and quails, foxes and mink, horses, colts, horses - mature animals, and to dogs. It has already been mentioned that the route of application of the vitamin enrichment, particularly for cattle, may be protein blocks containing on the average perhaps 10,000 to 20,000 units per lb., or salt blocks which can contain up to 15,000 units per ounce, or the drinking water, or liquid molasses products, but also the fresh feed and pelleted feed including those given to poultry, and other animals. Possibly the major source of large amounts of vitamin A that are available for ingestion by the human being is associated with the vitamin capsules readily obtainable both in drug stores, supermarkets and health food stores.

## Biological Data

### I. Acute Toxicity

| Substance | Animal | Sex & No. | Route | Dosage IU/100 g | Measurement | Ref. |
|---|---|---|---|---|---|---|
| Retinyl acetate | Rat | - | Oral | 1 million | $LD_{50}$ | 177 |

Large doses of vitamin A from whale liver oil were given by catheter to two male rats weighing 70 and 239 g every 30 min for 3 hr; additional vitamin A was introduced into the diet. The smaller and larger animal received 700,000 and 1.6 million IU, respectively, during this period. Observations over the next 24 hrs revealed weakness, shivering, diarrhea, scruffy pelt, and hyperemia in the kidney, adrenal, pancreas, testis, or spleen (7736).

In order to study the effect of vitamin A on cartilage, Thomas et al. fed a single dose (400,000 IU) of vitamin A palmitate in corn oil by stomach tube to 10 young male hybrid rabbits. Within 2 days, the ears of 6 animals partially collapsed. Histological studies indicated depletion of the basophilic component of the matrix in articular, epiphyseal, and tracheal cartilage. Similar results were achieved by intraperitoneal administration. It was suggested that these changes may be produced by activation of a proteolytic enzyme or enzymes with properties similar to those of papain (9077).

Marie and See produced acute hydrocephalus in a 4,000 g puppy by administering 350,000 IU of vitamin A per os. A distinct tension of the fontanel was observed. Two other puppies were given 100,000 IU/day for three days without effect (5785).

The symptoms of acute vitamin A poisoning in children are vomiting, drowsiness, and bulging of the fontanelle. In adults, severe headaches, vertigo, abdominal pain, vomiting, and diarrhea have been reported. Rapid and complete recovery succeeds cessation of excess intake in adults (6957).

### II. Short-Term Studies

#### A. Retinol

Rats

Lewis and Cohlan determined that the toxic effects of hypervitaminosis A were greater when the vitamin was in an aqueous vehicle than when an equal quantity was dispersed in oil. Groups of 50 adult male rats (175-200 g) received 25,000, 50,000, or 100,000 IU of vitamin both as Aquasol (50,000 IU/ml) and as vitamin A concentrate, natural esters (200,000 IU/ml). In addition two groups of 20 animals were given only

the vehicles. Preparations were administered by stomach tube daily for 21 days. By the 2nd or 3rd day, the group receiving 100,000 IU Aquasol became sluggish and had a ragged coat; appetite and weight dropped, commonly with diarrhea. By the 8th day all members had died. In contrast, the group given 100,000 IU in oil had a mortality rate of only 17% after 21 days. Forty percent mortality occurred in rats fed 50,000 IU aquasol (5411).

> "During the 21 day experimental period the observed symptoms of vitamin A toxicity were: scruffiness of the pelts, drowsiness, muscular weakness, bleeding, lack of appetite, reduced growth, alopecia, swelling and redness of the palpebrae, exophthalmos, limping and spontaneous fractures. Limping was first noted in the hind legs and did not occur till the 8th to 10th day. Radiographs revealed a narrowing of the diameter of the shafts of the long bones with thinning of the cortex especially at the metaphysis. The bones appeared normally calcified. Spontaneous fractures were seen beginning at the twelfth to fourteenth day. The fibula was the most common site of early fracture followed by the humerus, femur and tibia in that order. Gross scoliosis of the vertebral column was noted in many animals after the second week (5411).

Table 1 shows the comparative incidence and rate of spontaneous fractures for oily and aqueous vitamin A.

TABLE 1

INCIDENCE OF SPONTANEOUS FRACTURES IN RATS FOLLOWING ADMINISTRATION OF EXCESSIVE AMOUNTS OF AQUEOUS AND OILY PREPARATIONS OF VITAMIN A

| No. of Animals | Vitamin A Intake Daily for 21 Days | No. of Animals with Spontaneous Fractures |
|---|---|---|
| 50 | 50,000 i.u. Aqueous | 45 |
| 50 | 50,000 i.u. Oily | 6 |
| 50 | 100,000 i.u. Oily | 38 |

Excessive vitamin A intake caused liver damage and reduced liver storage of vitamin A in a dose-related fashion for both oily and aqueous preparations (5411).

Two groups of 10 male Sprague-Dawley rats weighing about 80 g were given 0 or 10,000 I.U. of vitamin A (Aquasol A) per os every other day for 16 weeks. Rats fed vitamin A grew slower and began to lose weight at the 14th week of the experiment. In a second study, groups of 5 rats weighing 110 g received 0 or 50,000 IU of vitamin A per os daily for 16

days. Rats given this high dose showed arrested growth followed by progressive weight loss. The animals were lethargic and suffered a hair loss around the mouth, continuing caudally along the ventral surface. The submandibular glands of all four groups were examined microscopically. The acinar cells evidenced clefting of the rough endoplasmic reticulum and hyperplasia of both the rough endoplasmic reticulum and Golgi apparatus; these effects were interpreted as hyperactivity. Abnormalities were more pronounced in the group receiving 50,000 IU/day (10841).

Berdjis and Rinehart fed 100-700 IU retinol per g body weight daily to rats and guinea pigs as shown in the table below (753):

Table 2

Details and distribution of animals and vitamin A

| Group number | Animal number | | Age | Vitamin A (daily) I. U. per gram of body weight |
|---|---|---|---|---|
| | Rat | Guinea pig | | |
| **FIRST EXPERIMENT:** | | | | |
| I | | 10 | 5 | 700 |
| Controls | | 5 | 5 | 0 |
| II | 8 | | 40 | 350 |
| | | 8 | 5 | 350 |
| Controls | 4 | 4 | Same ages respectively | 0 |
| III | 8 | | 90 | 200 |
| | | 5 | 70 | 200 |
| Controls | 4 | 4 | Same ages respectively | 0 |
| IV | 1 | | 90 | 200 |
| **Basic study for another experiment (3)** | | | | |
| V | 6 | | 90 | 100-200 |
| | | 6 | 70 | 100-200 |
| Controls | 3 | 3 | Same ages respectively | 0 |
| VI | 4 | | 40 | Parathormone (see text) |
| | | 4 | 20 | |

Groups I and II died or were sacrificed when moribund 7-17 days after vitamin A administration; the other groups were sacrificed 22-100 days after termination of the experiment. The duration of feeding was not specified. The principal organs including the endocrine glands, kidneys, and bones (femur, tibia, vertebrae, skull, jaws, and ribs) were examined microscopically. The formation of small fibro-osteoclastic zones and/or lacunar resorption in the entire bony system was observed in both species and felt to be as classical a symptom of hypervitaminosis A as fractures, hemorrhages, and accelerated bone growth. The parathyroids appeared to be enlarged and more compact, and metastatic calcification was seen in the kidneys (753).

Groups of 10 female albino rats weighing an average of 146.5 g received retinol in corn oil at 0, 25,000, 50,000, and 75,000 IU per os per day. Rats were sacrificed on day seventeen. The heart, lungs,

liver, and kidneys were examined microscopically, as were the scapulae, humerus, femurs, tibias, and pelvic girdles. All animals were subjected to X-ray examination. Rats given either 50,000 or 75,000 IU suffered from weight loss, epilation, bent and limp posture, and bleeding around the nose and eyes. Radiolucency and thinning of the long bones of the extremities, pelvic girdles, scapulae, and spinal bones were observed. Varying degrees of calcification were observed in the kidneys, heart, and lungs, with severe calcification occurring in the liver (10677).

Irving found that hypervitaminosis A reduced the rate of bone formation in the incisal alveolar bone of rats. Data was taken from young rats who had been given 40,000 IU of vitamin A daily for 10-42 days. In the alveolus the rate of bone formation was markedly reduced, many cementing lines were seen, and active osteoblasts were fewer. Osteoclasts appeared to be unaffected, causing the bone to become abnormally thin and missing in places. In the teeth, the appositional rate of dentin formation was decreased, the interfibrillar cementing substance was gradually reduced in amount, and the lingual odontoblasts had begun to atrophy (4213).

Hypervitaminosis A was produced in 40 to 41-day-old female Wistar rats weighing about 150 g by oral doses of 25,000 IU vitamin A daily for 14 days. Histological examination of the gingival epithelium disclosed a general increase in the size of oral epithelium, a marked reduction of the hornified layer, an increase of the granular layer, enlargement of the kerato-hyalin granules and reinforcement of the basement membrane (10763).

Berdjis gave 40 rats averaging 35 days of age 100-300 IU of retinol per g of body weight per os daily for up to 4 weeks. An equal number were kept as controls. Frequent, extensive hemorrhages and multiple, spontaneous fractures were observed. Details of the skeletal lesions are given in the text. The parathyroid glands increased in size, and became more compact; cellular changes were noted (752).

Carpenter and Sampson found changes in the histological appearance of the thyroids of rats given excessive amounts of vitamin A (10297):

> "In each of 7 sets of three litter-mate female rats of Sprague-Dawley strain, one animal was given approximately 25,000 IU of vitamin A daily for the first week in addition to a basal diet with vitamin supplements. In succeeding weeks the amount of vitamin A was doubled or tripled. Each set contained one pair-fed and one unlimited control. Experiments varied in length from 16 to 31 days depending on when the rat receiving excess vitamin A showed progressive loss of weight. Within 24 hours of the termination of the experiment, 5 of the sets were injected subcutaneously with equal tracer doses of I-131. Rats were etherized and the thyroids removed and fixed immediately.
>
> The histological appearance of the thyroids of all rats

given excessive amounts of vitamin A was consistently different from that of the controls. The majority of the follicles were smaller, highly irregular in shape and contained relatively little colloid. Follicular cells were hypertrophied and frequently contained PAS-stained droplets in the cytoplasm. Mitoses appeared occasionally (10297)."

Misra fed groups of 6 male Wistar rats aged 9-10 months a basal diet plus 14,400, 28,800, 57,600, or 93,600 IU retinol orally daily for 10 days. A fifth group served as the control and received saline for the same period. Retinol-fed animals lost weight and decreased their food consumption within 4-5 days. Epilation, bent and limping posture, bleeding around the nose and eyes, and internal hemorrhages on both right and left front and back limb joints and neck were found to occur in a dose-dependent fashion (6224).

Weanling Wistar rats (10-16 per group) were orally dosed with 0, 250, 375, 625, and 1,250 IU of vitamin A per g daily. The vitamin A source was a concentrate containing 14.3% vitamin A, 10% unidentified sterols, less than 1% tocopherols, and less than 100 units vitamin D per/g. Animals were observed until 49 days of age. X-ray examination showed the tibias of test animals to be thinner and the metaphyseal cortex to be less opaque than in controls; effects were a function of the dose. When 625 or 1250 IU were administered, fractures were observed between the 7th and 14th day of treatment. Weight gain and feed consumption were both depressed (9372).

Herbst et al. reported hypervitaminosis A in weanling rats given a supplement of 20,000 IU of crystalline vitamin A daily for an unspecified amount of time. Bone fragility and growth failure were apparent (3832).

Two out of three rats fed 20,000 IU of crystalline retinol daily showed weight loss and bone fractures within 11 days; the third animal voluntarily consumed less of the ration (7078).

Combescot et al. found that an increased intake of vitamin A produced irregularities in the vaginal cycle of rats. Forty-three female weanling Wistar rats consumed approximately 563 IU of vitamin A/day in addition to a basic diet for 8 months; then vaginal smears were made daily for 87 days. Five animals showed normal 4-5 day cycles. Seventeen were in a state of permanent estrus, and platelets were observed daily in the smears. In 21 animals the estrus and diestrus phases alternated irregularly. Other animals were fed extra vitamin A in a high-lipid diet, but had fairly normal cycles (1784).

Oral doses of 50-100 IU vitamin A/g body weight resulted in appreciable toxic symptoms in rats. Doses of 47-135 IU vitamin A/g body weight produced only slight effects, but doses of 200-500 IU caused pronounced clinical symptoms. Doses over 800 IU/g body weight proved lethal in all cases at the end of periods varying from 9 to 30 days. Generally, whale liver oil (200,000 IU vitamin A/g) which had been found to contain no vitamin D served as the vitamin A source, but vitamin A alcohol and acetate from fish oil concentrates were occasionally used. The details of the methodo-

logy were not provided (7735).

> "The symptoms following ingestion of toxic dose of vitamin A were: changes in the pelts, drowsiness, muscular weakness, lack of appetite, reduced growth, soreness and bleeding of the skin, alopecia, swelling of the palpebrae, exophthalmos, stiffness in the limbs, limping, spontaneous fractures, hemorrhages, proteinuria, hematuria, intestinal bleeding, and in some cases hypochromic or normochromic anemia.
>
> Histologically, the most constant findings were hyperemia, scattered red blood cells outside the capillaries in the internal organs and in the space of Bowman's capsule in the kidney, degeneration of the renal tubules, deposits of sudanophil droplets in the liver and increased sudanophil deposits in the adrenal cortex." X-ray examination of the long bones showed gradual thinning of the shaft (7735).

Rodahl gave 4 young rats weighing 60-65 g whale liver oil containing 50,000 IU vitamin A daily both in the feed and by dropping pipet. All four died after 26 to 30 days; the two control animals remained healthy during this time. Loss of weight, soreness around the eyes and mouth, limping, alopecia, fractures accompanied by hemorrhages in the extremities, and enlarged adrenals were seen. A moderate degree of hyperemia was observed in the kidneys of one animal and there were dense deposits of large sudanophil droplets in the Kupffer cells of the liver and in the adrenal cortex (7736).

In a second experiment, three rats received daily 52,000 IU of vitamin A acetate obtained from a saponified and purified maritime oil concentrate. Rats either died or were sacrificed because of their moribond state after 11 or 21 days. Similar results were found (7736).

In a third experiment, 4 rats were given 60,000 IU of vitamin A daily in the ration and by pipet for 28 to 42 days. Post-mortem examination revealed emaciation, fatty livers, abscessed kidneys, and in one animal, accessory adrenals. Scruffiness, sores about the eyes and mouth, and fractures were present (7736).

Studies were performed in which whale liver oil with the vitamin A destroyed by sunlight, whale liver oil freed of sterols and kitol, and such sterols were fed to rats. They indicated that the toxic factor of whale liver oil was, indeed, vitamin A and that none of the other fractions were responsible for the toxic effects on rats. Rodahl also found that the same gross dose (50,000 IU) of vitamin A was slightly more toxic to rats when partly mixed in the diet than when given completely by catheter. The gross symptoms were similar to those above with exophthalmus, hematuria, proteinuria, hyperemia in the internal organs, muscular hemorrhages around the fractures, fatty livers, and swollen visceral lymph glands (7736).

Rodahl administered 10,000 and 50,000 IU vitamin A from whale liver oil concentrate by dropping pipet to two groups of 4 young rats for up to

58 days. There was a slight decrease in weight gain in the 10,000 IU group, but no other macroscopic pathological changes were seen. But at the higher dose, distinct clinical symptoms occurred within 6-14 days, with reduced weight gain, limping, fractures, scruffiness, soreness, alopecia, and exophthalmos. Histological examination of the liver, kidneys, adrenals, pancreas, intestines, lungs, thyroid, and bones revealed marked hyperemia in the lungs, kidneys, and liver (7736).

Other studies by Rodahl indicated that the clinical symptoms as well as the postmorten findings are similar in young, adolescent and adult rats. While the same bone alterations occurred, they appeared to develop more slowly in the adult animals than in very young ones (7736).

Vedder and Rosenberg administered per os 16,000, 33,000, and 66,000 IU of vitamin A to groups of 8 to 25 young male Wistar rats for 100 days. Jewfish liver oil was the vitamin A source. Microscopic examination of the stomach, intestines, testes, adrenals, thyroid, and parathyroid were normal. The following effects were often observed: mild congestion of the lungs; marked congestion, some cloudy swelling, and some fatty infiltration of the liver; moderate congestion and cloudy swelling of the tubules of the kidney; and a slightly congested spleen. Some of the animals showed depressed growth, hemorrhages around the eyes and nose, exophthalmos, and bone lesions. If the animal survived, the fractures generally healed despite continued vitamin A administration. Only 5 out of 25 rats fed the highest level survived the test period. Molecular distillation and subsequent feeding of the resulting fractions of different lots of jewfish liver oil revealed that vitamin A was not the only toxic factor present; in addition, the toxicity of different samples of oil was not proportional to their vitamin A content (9407).

Weslaw et al. administered 12 to 120 IU of vitamin A as Vogan or Cresavit (fish liver oil concentrates) orally to young rats for up to 100 days. Alopecia, red and swollen eyelids, long bone fractures, and swollen external genitals were seen. Ten control animals received sesame oil and remained in good health (9741).

Daily oral doses of 20,000 rat units of vitamin A (Vogan) were given to 2 weanling rats for 10 days. One rat unit was defined as the minimum amount that can prevent growth retardation and xerophthalmia in a 4 to 8-week-old rat on a vitamin A free diet. Weight gain was depressed during this period but increased after cessation of vitamin A treatment. Alopecia, an irregular gait, and exophthalmus were also noted (1766). Similar effects were found by Drigalski (2293).

Guinea Pigs

Gil et al. fed groups of 5 male short-hair albino guinea pigs, weighing about 260 g, diets containing 1.67, 3.3, 6.6, 9.9, 16.5, 165, and 330 mg retinol per kg diet for at least 40 days. Results indicated that 1.67-9.9 mg/kg diet maintained growth satisfactorily. Histological examination revealed metastatic calcinosis of the kidney and liver, and severe atrophy of the liver at 330 mg/kg. Growth was also reduced at this level (3154).

Dogs

Two-month-old greyhound puppies, one male and one female, were given 300,000 IU of vitamin A per kg body weight per os 6 days per week. Three other puppies were maintained as controls. The vitamin A was in the form of a concentrate with a potency of 500,000 IU per gram. Both test animals suffered from loss of appetite, marked weight loss, skeletal changes, hyperesthesia, and exophthalmus. The dogs were sacrificed after 58 and 69 days; a histological examination of the heart, lungs, spleen, gallbladder, pancreas, gastrointestinal tract, kidneys, adrenals, bladder, genitalia, lymph nodes, thyroid, skeletal muscle, and skin was performed. Degenerative lesions of the media were present in arteries and veins of the myocardium, gallbladder, urinary bladder, and one lymph node of the female. The male possessed liver necroses of various sizes (5632).

Man

Muenter et al. recently summarized the effects of chronic vitamin A intoxication in adults and adolescents. Their subjects included 16 females and 1 male with a range of 14-62 years. From 41,000 to 600,000 IU vitamin A were consumed daily for 2 months to nine years. The smallest daily dose leading to intoxication was 41,000 IU taken for eight years. However, intoxication occurred within a two-month period at a daily dose of 200,000 to 275,000 IU. Table 3 indicates the symptoms and signs observed. Table 4 lists various laboratory findings. The authors indicated that chronic hypervitaminosis A may lead to hepatocellular damage, portal fibrosis, and eventual cirrhosis (6499).

TABLE 3 Symptoms and Signs in Seventeen Cases of Chronic Vitamin A Intoxication in Adults and Adolescents

| Symptom or Sign | Cases (no.) |
|---|---|
| Skin (dryness, maculopapular rash, fissures, desquamation, pigmentation, pruritus) | 17 |
| Hair loss | 14 |
| Generalized weakness and fatigue | 14 |
| Pain in bones and joints | 13 |
| Marked tenderness of bones to palpation | 11 |
| Anorexia | 9 |
| Headache | 9 |
| Hepatomegaly | 8 |
| Muscle stiffness | 7 |
| Endocrine (absent or decreased menorrhea) | 7 |
| Papilledema | 6 |
| Diplopia | 6 |
| Weight loss | 6 |
| Splenomegaly | 6 |
| Polyuria, polydipsia, urinary frequency | 6 |
| Psychiatric symptoms | 6 |
| Edema of lower extremities | 6 |
| Insomnia | 5 |
| Bleeding (nose and lips) | 5 |
| Brittle nails | 4 |
| Somnolence | 3 |
| Exophthalmus | 2 |
| Yellow discoloration of skin | 2 |
| Other neurologic symptoms | 2 |
| Gingivitis | 1* |
| Lymphadenopathy | 1 |

*A similar case of gingivitis in vitamin A intoxication has been described by Smith [16] but was not included in this review of seventeen cases.

TABLE 4 Laboratory Findings in Seventeen Cases of Chronic Vitamin A Intoxication in Adults and Adolescents

| Test | Cases (no.) | |
|---|---|---|
| | Normal | Abnormal |
| Sedimentation rate (mm in one hr) | 1 | 7 (range: 22-87) |
| Sulfobromophthalein retention (%) | 3 | 3 (17, 26, 32) |
| Alkaline phosphatase | 3 | 7 (increased) |
| Serum total protein | 8 | 1 (decreased) |
| Serum total albumin | 1 | 7 (decreased) |
| Serum bilirubin: total | 7 | 5 (increased) |
| direct | 7 | 1 (increased) |
| indirect | 7 | 1 (increased) |
| Prothrombin time | 4 | 3 (increased) |
| Thymol turbidity | 9 | 1 (increased) |
| Cephalin flocculation | 9 | 2 (increased) |
| Hemoglobin (gm/100 ml) | 8 | 6 (decreased; range 10.2-12.0) |
| Leukocyte count (per cu mm) | 8 | 3 (3,200, 4,100, 4,300) |
| Protein-bound iodine (μg/100 ml) | 4 | 2 (1.8, 10.8) |
| Cholesterol | 6 | 2 (decreased) |
| Urinalysis | 6 | 3 (protein 1+) |
| Cerebrospinal fluid: Pressure (cm water) | 3* | 3 (35, 60 "increased") |
| Cells, protein | 5 | 0 |
| Roentgenogram of long bones and spine | 11 | 2 (demineralization) |
| Electroencephalogram | 4 | 2 (diffuse abnormality, projected type) |
| Serum vitamin A (μg/100 ml) | 0 | 17 (range, 83-2,000) |
| Serum carotene (μg/100 ml) | 6 | 3 (slightly increased; range 264-375) |

*These normal values were 15/13, and 7 cm water.

Caffey examined 7 infants or young children who had been given excessive quantities of various concentrates of vitamins A and D by their mothers. The subjects were males and females aged 12-32 months and had received approximately 75,000 to 500,000 IU of vitamin A for 6 to 15 months. Pruritis, hyperirritability, swelling, and pain of the extremities accompanied by hyperostosis were reported. Figure 1 indicates the distribution of hyperostoses in the seven patients (1364). Such skeletal lesions may be irreparable; subsequently, full longitudinal bone growth may not occur (6957).

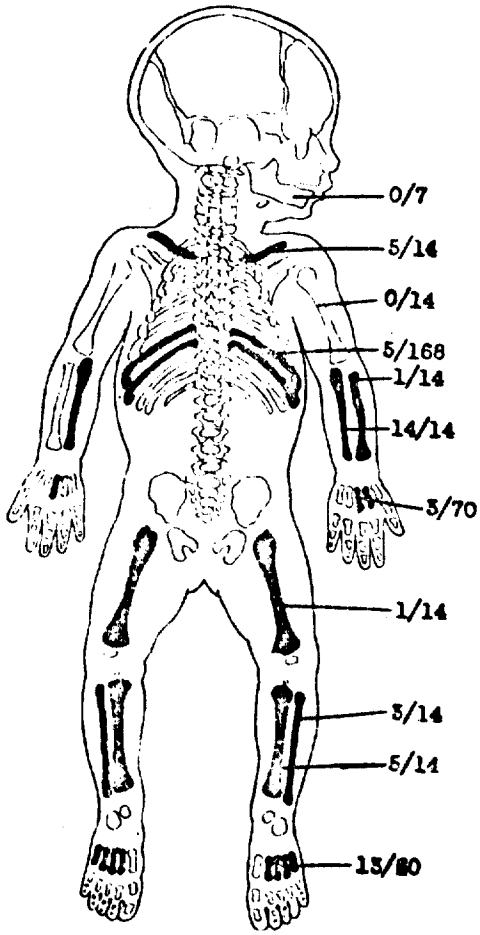


FIG. 1 Distribution of hyperostoses in 7 patients. Shaded bones were hyperostotic and numbers opposite each shaded bone indicate total number of such affected bones in all 7 patients on both sides or only. In every patient both ulnas were thickened and in every patient some of metatarsals were affected. First metatarsals, however, were not affected in any patient.

Other investigators observed bulging fontanelles in infants that were believed to result from increased cerebral spinal pressure (6957).

Data from 490 cases of hypervitamonosis A has been assembled by Koerner and Voellm and may be found in the NAS/NRC information (10763).

B. Retinyl Acetate

Chicks

Six groups of 24 fifteen-day-old White Plymouth Rock male chicks were fed a vitamin A-low basal diet plus 0, 0.5, 5, 50, 500, and 5,000 mg of crystalline vitamin A acetate per kg diet for 20 days. Vitamin A acetate was mixed in olive oil, and then combined with the diet. For all but the group given 5,000 mg/kg vitamin A acetate, the amount of food offered was regulated by the consumption of the group eating the 500 mg/kg diet. The 5,000 mg/kg group decreased their consumption so markedly within 24 hours of initiation to the supplemented ration that they were switched to an ad lib program. On the 5th, 10th, and 20th day, 8 chicks from each group were sacrificed, and blood and livers samples were taken. Chicks tolerated up to 500 mg/kg of vitamin A acetate without apparent ill effect; however, a level of 5000 mg/kg caused significant distress. These chicks huddled together with closed eyes and drooping heads after 24 hours; food consumption dropped from 12.50 to 2.92 g per subject on the 2nd day. Thirty-five percent suffered from stuck eyelids which had to be forced open; chicks could then see well enough to eat. The eyelids and corners of the mouth were crusty and red. Weight gain was also depressed. No evidence of bone fragility was noted. The livers of the 500 mg/kg group were significantly heavier than livers from other groups at all three sampling times (7405).

Fifteen seven-day-old-male Thornber's 404 chicks received 20 mg retinyl acetate per 100 g body weight daily by stomach tube. Another 15 birds were kept as controls. At 14, 21, and 28 days of age, 3, 4, and 5 birds respectively were sacrificed. All hypervitaminotic birds grew more slowly and had shorter, narrower, and lighter bones than the controls. The activity of the osteoblasts was markedly inhibited. The epiphyseal cartilage was abnormally thick with a decrease in the vascular channels. Inflammatory lesions present on the skin of the face were thought to be a local response to irritation (488).

Wolbach and Hegsted found similar skeletal problems in chicks fed 600 to 900 IU of vitamin A for 20 days (9960).

Rats

Vitamin A acetate (Arovit) was administered orally to twenty albino rats weighing 44-49 g for 10 days at 30,000 IU per day. Another group of 20 was pair-fed but had no supplement. Food consumption decreased in the test group after 3 days, becoming almost negligable after 8-10 days; body weight dropped correspondingly. After a single dose of 30,000 IU was given, drowsiness and muscular weakness appeared within 24 hours. Loss of appetite and weight, weakness, hair loss, appearance of a crust around the eyes, occasional internal hemorrhage, and paralysis befell the test group within 6-8 days. The weights of the heart, liver, kidney, and adrenal glands were higher in the vitamin A fed group, while spleen and brain weights did not differ significantly. Preliminary studies in-

dicated that when vitamin A administration was stopped at 10 days, the animals required 2-3 weeks to recover. Death would ensue within 12-15 days. Measurement of the oxidation of ascorbic acid in the adrenal glands indicated an 18% increase over controls (7570).

Male rats weighing 40-50 g were given 50,000 IU of vitamin A acetate in oil by gastric catheter daily for 5 days. The animals lost weight rapidly, showed slow growth in length and became lethargic and untidy, with disheveled fur falling out in some areas (abdomen and head). They showed hyperemia and inflammation of the conjunctivae, multiple fractures of the diaphyseal parts of the tibiae and femora, considerable increase in diuresis and loss of appetite. Autopsy revealed hemorrhagic extravasations in the viscera (especially lungs and liver), edema of the brain, enlargement of the liver and distention of the stomach. All these features pointed to the development of hypervitaminosis A. The weight of the adrenals had increased by 88%, while the weight of the thymus was approximately halved, a situation indicating stimulation of the adrenocortical function (6657).

Other experiments showed that removal or block of the hypophysis prevented the response of the adrenals to vitamin A without extinguishing the toxic effects of vitamin A. Natanson et al. suggested that the hypophysis mediates the effect of vitamin A on the adrenals (6657).

Results of a 28-day feeding study with albino rats revealed no deaths at a level of 15,000 IU of vitamin A acetate/100 g body weight/day and an LD50 at 28 days of 20,000-30,000 IU/100 g body weight/day. When animals were supplemented daily over a long period (9-12 months), about ½ the animals died at levels of 20,000 units/animal/day and all died at 30,000 units. Depression of the growth curve proved to be a very sensitive measure of vitamin A toxicity. Supplements as high as 10,000 units/100 gm/day showed normal growth but levels of 15,000-20,000 units/100 gm/day caused marked depression. Organ weights at the end of the experimental periods were essentially normal with the exception of a marked hypertrophy of the adrenals. The breaking strength of the excised leg bones decreased with increasing dosage and closely paralled depression of growth as a measure of vitamin A toxicity (177).

Moore and Wang reported that the consumption of an excessive amount of vitamin A acetate led to skeletal fractures and either internal or external hemorrhage in growing rats. Five male rats weighing 69-79 g received 50,000 IU of vitamin A acetate in arachis oil mixed in 3-4 g of the basal ration daily; after dosing, rats were offered the ration on an ad lib basis. Because some animals refused the supplemented feed, the dose was reduced to 25,000 IU on the 5th day. By day 8 several of the animals limped, and by day 20 all five had fractures; the bones had become abnormally thin. Exophthalmos was seen in all cases. Autopsy revealed subcutaneous and intramuscular hemorrhages in some of the animals. A second similar study confirmed these results. The vehicle, arachis oil, was tested and found to be non-toxic under these conditions (6329).

Capellin and Crepax administered daily doses of 10,000 to 50,000 IU of vitamin A acetate in olive oil by stomach tube to a total of 97 albino rats weighing 50-100 g. A dosage of 10,000 IU per day was well tolerated for over 3 months. Doses of 20,000 IU/day led to the death of animals weighing 80-100 g within 25-30 days; weight loss, alopecia, and inflammed connective tissue accompanied by hemorrhage were observed. Spontaneous and multiple bone fractures were seen as early as the fifteenth day. At higher doses, muscular dystrophy, hemorrhagic diathesis, and earlier death were common. The results of microscopic study of the long bones are presented in the text (1414).

The oral administration of 25,000 IU of vitamin A (Arovit) to 7 30-day-old female Wistar rats for 14 days produced extremely fragile and stunted tibias. Examination at 54-55 days of age showed thickening of the cartilage, accompanied by retarded modification of the trabeculary bone (10763).

Seven white female Wistar rats weighing 150 g received 25,000 IU vitamin A (Arovit) for two weeks. Histological and radiographic examinations of the upper incisors were performed. Observations included an increased vascularization of pulp and periodontium, accompanied by a thinning of the dentin. Hyper-calcification of the enamel and dentin was noted (10763).

Sobel et al. performed a feeding study in which groups of 2-5 stock-fed Wistar rats and vitamin A-deficient rats were administered 0 to 10,000 mcg/day vitamin A acetate in corn oil per os for 28 days. After weaning, animals to be depleted of vitamin A were fed a vitamin A deficient diet until the body weight remained stationary for 7 days and/or xerophthalmia developed. Other animals were fed a stock ration. Four out of five deficient animals receiving 10,000 mcg/day developed toxic symptoms within 7 to 17 days of treatment; paralysis of the hind limbs necessitated early sacrifice. Hypervitaminosis A was indicated by high serum levels of the vitamin, weight loss, and excess storage of vitamin A. Intakes of 100 mcg/day or higher depressed growth. Oral doses of 20-30 mcg/day were found to be optimal for this group. While 1000 mcg/day of vitamin A did not significantly affect the growth rate of stock-fed supplemented rats, 10,000 mcg/day caused a marked drop in growth (see figures 2 and 3). The authors stated that stock-fed animals apparently can resist the growth depressing effects of vitamin A (8596).

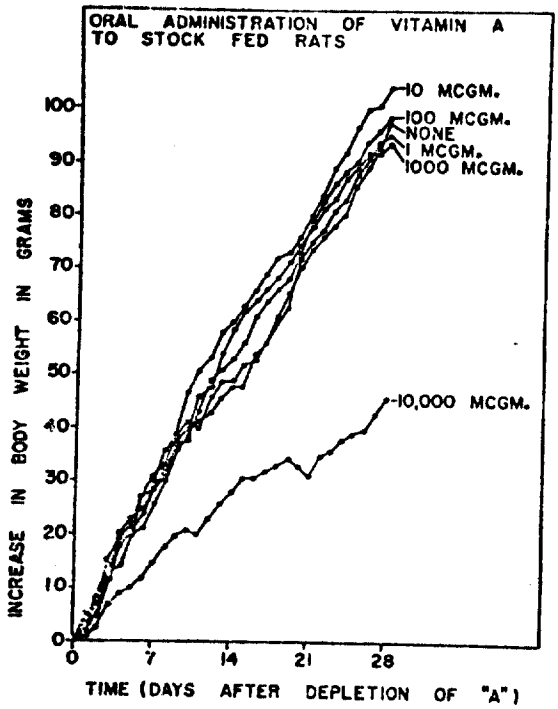


FIG. 2. Growth Curves Following Oral Administration of Vitamin A to Stock Fed Rats. Refer to Table I.

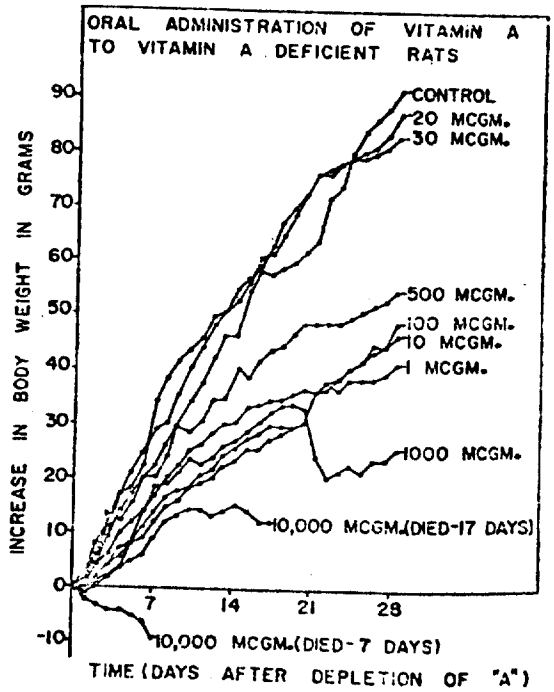


FIG. 3. Growth Curves Following Oral Administration of Vitamin A To Vitamin A Deficient Rats. Refer to Table II.

Cats

Clark and Seawright reported the occurrence of osteodystrophy in kittens fed excess vitamin A. Three healthy 8-week-old kittens were given daily oral doses of 100,000 IU of vitamin A acetate in polyethylene glycol and isopropanol for 4 weeks; three litter mates served as control animals. Calcium and vitamin D supplements were administered to all cats. One animal from each group was sacrificed 4 weeks after the last dose and the rest 13 weeks after the last dose. Pathological investigation revealed a drastic shortening of the long bones of the limbs plus a structural alteration of the stifle joint. Bone deformation appeared to be a result of restricted growth at the cartilaginous epiphyseal plate (1709).

In a second study by Clark et al. levels of 40-100 mcg/g body weight vitamin A acetate in gelatin capsules were given daily to 8 healthy kittens for 4-5 weeks; doses given were adjusted daily to depress appetite and playfulness but to avoid acute toxicity. Seven control animals were also maintained. Vitamin A administration ceased and the animals were destroyed 6-15 weeks later. Peeling of the epithelium of the pads and frequent blinking were observed during the period of dosing. By the 10th week, test kittens showed a distinct gait abnormality. Most of the long bones were much shorter in the test kittens, and some showed abnormal morphology due to an altered growth pattern in the past dosage period. Histological examination revealed variable damage to epiphyseal growth plates (10321).

In a further study, Clark administered 50-100 mcg of vitamin A acetate per gram body weight daily in gelatin capsules to 10 weanling kittens; 10 pair-fed controls were also kept. After 21 or 30 days, 8 pairs were sacrificed while 2 pairs were allowed to recover on a normal diet for some weeks. Food consumption was depressed 20-80% from the initial level in test animals, but the two kittens permitted to recover, as well as the controls, gained weight and appeared healthy. However, these two kittens developed abnormal gaits in following weeks. Long bone pathology was studied in all animals. In the kittens destroyed immediately after dosing, the main changes were reduction in endochondral bone growth due to damage to epiphyseal plates, and osteoporosis due to cessation or retardation of osteoid production in the diaphyses. Retarded endochondral bone growth was accentuated in the two kittens allowed to recover after dosing, while bone formation in the diaphyses had returned to normal (1710).

In a later study two groups of 8 newly-weaned six to eight-week-old kittens received a normal diet plus 0 or 20-60 mcg/g body weight of vitamin A as the acetate in gelatin capsules daily. Half of each group was sacrificed after 30 days while the other half recovered for 30 days without further vitamin A treatment. Undecalcified transferse sections through the midshaft of tibias from kittens dosed with high levels of vitamin A, and from kittens recovering from such treatment, were examined by in vivo labelling with fluorescent dyes and by microradiography. During treatment subperiosteal bone deposition was retarded while intra-osseous and subendosteal bone formation were relatively unaffected; normal bone resorption, responsible for shaft remodelling, was also inhibited. In kittens labelled during the recovery period, both formation of bone by the periosteum and resorption of the original compacta were greater than normal. These results illustrate that rapid compensatory activity occurs in bones following vitamin A toxicosis (10318).

Growth of the epiphyseal plates was retarded in kittens given excess vitamin A for 7 days. One member of each of 4 pairs of newly weaned 6-to-8-week-old kittens received 69,000 mcg of vitamin A concentrate orally in gelatin capsules daily, while the other member received the basal ration only. Epiphyseal plates from the test animals were reduced in depth, contained fewer chondrocytes arranged in shorter, irregular columns, and the hypertrophic cells were smaller. The cartilaginous matrix exhibited a diffuse loss of basophilia and of metachromasia and coarse fibrillation (10320).

Pigs

In a study by Hurt et al., six sets of 4 littermate weanling cross-bred boar pigs were placed on a vitamin A-depletion ration with whole milk supplements, and, at the beginning of the 3rd or 4th week, given 39.7 mcg vitamin A (as the acetate). After this three-or-four-week period, the animals were divided equally into 4 groups and given in the ration 39.7, 119.0, 6,614 (mildly hypervitaminotic), and 19,842 (severely hypervitaminotic) mcg of vitamin A as the acetate per kg live weight daily for 5 weeks. The amount of feed offered was determined weekly by the average daily consumption of the pig consuming the least amount for each littermate set.

However, less total feed consumption was noted in the severely hypervitaminotic group, as was decreased total weight gain and feed efficiency. With the exception of one pig showing slight hyperemia, the mildly hypervitaminotic group appeared normal. On the other hand, the severely hypervitaminotic group exhibited hyperemia of the ventral portion of the body, abnormal stance with varying degrees of lameness, slight to severe hind limb immobilization, and extreme weakness. Cisternal cerebrospinal fluid pressures were lower in the groups receiving 6,614 and 19,842 mcg/kg vitamin A. At necropsy, the adrenal glands, heart, kidneys, liver, and the right supraspinatus were weighed. In the severely hypervitaminotic group, adrenal, heart and kidney weights per unit live weight were increased while the supraspinatus and liver weights were decreased, as compared to all other groups. Bone growth was also affected at this level. Serum transaminase (GOT, GPT) activities were elevated at the highest intake, whereas acid and alkaline phosphatases were unaffected (10586).

Wolke et al. fed groups of 6 Yorkshire-Hampshire pigs, aged 4-5 weeks, diets containing 39.7 (control), 119.0 (group A), 6,614 (mildly hypervitaminotic-group B), and 19,842 (severely hypervitaminotic-group C) mcg vitamin A acetate per kg body weight daily. After 5 weeks the animals were sacrificed and a histological examination of various bone tissues was performed. Anorexia, erythema of the ventral surface of the body, and abnormal stance with an arched back were observed in the pigs of group C, as well as lameness, pain, and stiff hind legs. After the third week the pigs sat or lay down refusing to walk. Food consumption and weight gain were both depressed. Few osseous lesions were observed in pigs given 6,614 mcg/kg; however, lesions in the pigs fed 19,842 mcg/kg were severe in both endochondral and intramembranous bone. Long bones were decreased in length and width, with greatest tissue loss in the epiphysis due to lysis of chondroid matrix. Spicules of spongiosa were fewer but larger, and numbers of osteoblasts were significantly decreased. Change in subperiosteal osteoclastic activity was not observed. Intramembranous bone was thinner and had few osteoblasts and normal numbers of osteoclasts (9989).

It was proposed that excessive doses of vitamin A in the growing pig produced lesions in endochondral bone by destruction of epiphyseal cartilage and decreased production of matrix in the presence of normal remodeling processes. In intramembranous bones, the lesions were the result of inadequate production of matrix coupled with normal osteoclastic activity (9989).

### C. Retinyl Palmitate

Rats

Groups of 10 male weanling Sprague-Dawley rats were given orally by syringe 10,000, 25,000, and 50,000 IU/kg of each of three vitamin A palmitate preparations for 5 months. The preparations were Pure Vitamin A Palmitate containing 95% vitamin A, Pharmaceutical Vitamin A containing 58% vitamin A, and By-product Concentrate of Vitamin A Palmitate contain-

ing 20-27% vitamin A; the potency of each is presented in the text. Thirty control animals were maintained on a commercial dog chow plus the corn oil vehicle. Doses were adjusted according to the weekly weight and administered 5 days/week. Except for the rats fed 10,000 or 25,000 IU/kg of the concentrate preparation, the growth curves of all test rats paralleled the control curve. At 16 weeks the animals fed 25,000 IU/kg began to gain less than the controls. The growth curve of the animals fed 10,000 IU/kg fell off at 6 weeks and flattened by the 16th week. The death rate was higher for these two groups, as well. Blood counts taken after 18 and 35 weeks indicated a rise in white blood cells of treated rats but was said to be unrelated to the preparation of vitamin A or to the dose. Although many animals became ill with cold symptoms during the experiment, the frequency was not correlated to vitamin A dosing (10763).

Groups of 10 female albino rats with an average weight of 146.5 g received vitamin A palmitate in corn oil at 0, 50,000, and 75,000 I.U. per os per day. On the 17th day, rats were sacrificed. The heart, lung, liver, and kidneys were examined microscopically, as were the scapulae, humerus, femurs, tibias, and pelvic girdles. All animals were subjected to X-ray examination. Animals given vitamin A palmitate developed the following toxic symptoms: loss of weight, epilation, bent and limping posture, and bleeding around the nose and eyes. They also showed radiolucency and thinning of the long bones of extremities, pelvic girdles, scapulae, and spinal bones. The highest dosage induced almost complete resorption of the fibula. Varying degrees of calcification were observed in the kidneys, heart, and lungs (10677).

Seven sets of 3 female Sprague-Dawley rats aged 43-52 days were maintained on a purified diet plus powdered yeast and biweekly supplements of vitamins A, C, D, and E. One experimental rat from each group received 25,000 IU vitamin A palmitate per os daily during the first week and 2 or 3 times that amount in the following weeks. Each group had a pair-fed control and an ad lib control. Each set was sacrificed when the weight of the hypervitaminotic animal continued to fall; length of study was not further specified. Weight and feed efficiency decreased sharply in the hypervitaminotic animals. The usual toxic symptoms were observed as well as a copious yellow discharge in the urethral region and a marked thinning of the skeletal muscles (7994).

A study by Gorlin and Chaudhry indicated that hypervitaminosis A had a severe effect upon the temporomandibular joint but minimal effect upon the teeth. Sixty Sprague-Dawley weanling male rats were divided into 2 groups of 40 experimental and 20 control animals; experimental animals received 600 IU/g body weight of vitamin A as the palmitate orally. The usual symptoms of hypervitaminosis A were present. A long bone, costochondral junction, and complete head were submitted to pathologic examination. There was a reduction in the amount of dentin, odontoblastic changes, and a decrease in the collagen of the periodontal ligament, but these effects were attributed to loss of appetite. There

was marked vascularity of both the pulp and periodontal ligament. The condylar head of the temporomandibular joint was greatly reduced in size and its architecture altered. Seventy-eight percent of the experimental group suffered superiosteal hemorrhage (3323).

Twenty-three virgin female Holtzman rats (220-235 g) were given orally 50,000 U.S.P. units per day of vitamin A palmitate (Aquasol A Parental); ten rats served as controls. Surviving animals were sacrificed after 16 days. Scapulae were examined grossly while the hearts, aortas, and kidney underwent histological examination. Bone rarefaction, weight loss, and a depressed plasma alkaline phosphatase level were observed. No renal or cardiovascular pathology was seen (8782).

Ten female Sprague-Dawley rats weighing approximately 100 g received 20,000 IU vitamin A palmitate in sesame oil daily for 7 days, followed by 30,000 IU/day for 13 days. An equal number of rats were kept as controls. Histological examination of the rats fed excess vitamin A showed intense remodelling of the femur, with absorption of shaft tissue. In the mandible, the condyloid and coronoid processes atrophied. Similar surface lesions were observed in the scapulae (8281).

Cruess and Clark maintained groups of 15 male Holtzman rats on a complete synthetic diet. Animals received either sesame oil or 15,000 IU/100 g body weight of vitamin A palmitate in sesame oil daily by stomach tube. After 44 days the rats were decapitated, and the femurs, tibiae, humeri, radii, and ulnae were removed. The total lipid phospholipid, total and free fatty acids, and free and esterified cholesterol content was then determined. The hypervitaminotic A rats failed to gain weight normally and the ash content of their bones was slightly, but significantly, elevated. These animals also had decreased total fatty acids expressed as mg/g bone (1918).

Bayerle et al. treated female Sprague-Dawley rats with retinyl palmitate, using a probang, according to the following schedule:

1. 100,000 IU daily for 5 days;

2. 30,000 IU every second day for 51 doses;

3. 30,000 IU daily for 10 days; then 30,000 IU every second day for 45 doses; and

4. 100,000 IU daily for 5 days; then 50,000 IU daily for 20 days.

The first 3 groups were examined immediately upon termination of dosing and the last group was examined 42 days after the last dose. Serum total lipids, triglycerides, phosphatides, and cholesterol were increased and free fatty acids decreased. An increase of serum glutamic-oxalacetic transaminase and $alpha_1$-proteins was also found. Examination of the enlarged livers revealed pathological changes consisting of small vacuolar

fatty changes of hepatocytes and Kupffer cells. Complete remission of serum and liver changes was found weeks after the treatments was stopped (10238).

Rabbits

Ear collapse was observed in 4 out of 9 young albino rabbits given 500,000 IU of vitamin A palmitate daily for 6 days. Nine rabbits received no treatment. One of the test animals died on the fifth day, while loss of hair was observed in all the others. The experimental rabbits were found to have moderate or severe depletion of the matrix in articular and epiphyseal cartilage; mild focal depletion of the cartilage matrix of the trachea occurred in 5 rabbits (9079).

Guinea Pigs

An unspecified number of adult guinea pigs weighing 350-600 g who were on a normal diet received vitamin A palmitate in peanut oil per os in doses of 300-600 I.U. per gram of body weight. Death occurred within 10-17 days after a total of 2.5 to 3 million I.U. of vitamin A palmitate had been given. Animals suffered loss of weight, appetite, and hair, weakness, a spastic walk, and considerable rigidity with marked curvature of the spine. Histological examination revealed severe damage in the cerebral cortex, cerebellum, thalamus, and mesencephalon (1266).

Dogs

Friskies dog chow plus 1,000, 5,000, and 25,000 IU/kg of each of three vitamin A palmitate preparations was fed to sets of 3 mongrel beagle dogs five days a week for 10 months. The preparations were Pure Vitamin A Palmitate containing 95% vitamin A, Pharmaceutical Vitamin A containing 58% vitamin A, and By-product Concentrate of Vitamin A Palmitate containing 20-27% vitamin A; the potency of each is presented in the text. Six animals were kept as controls. Red and white cell counts, hemoglobin, and differential counts, as well as prothrombin time, serum inorganic phosphorus, and serum vitamin A were measured. The various preparations had no adverse effects on either growth or hematology. However, a few animals died from pneumonia or choking (10763).

Pigs

Thirty crossbred pigs were divided into five groups and fed 0, 1,000, 11,000, 110,000, or 1,000,000 I.U. of vitamin A palmitate per kg of diet for 4 weeks. After 14 days, 3 pigs fed 1,000,000 IU of vitamin A/kg diet died; within 21 days all animals on this diet exhibited hypervitaminotic symptoms. Observations included malaise, rough coat, scaly skin, hyperirritability, lacrimation, marked petechial hemorrhages over legs and abdomen, bleeding from cracks about the hooves, blood in the urine and feces, weakness, and loss of muscular control accompanied by inability to rise, periodic tremors, and death. Autopsy revealed hemorrhage into limb joints, in the mucosa, submucosa, subpericardium, and at the cortico-

medullary junction of the kidney. Feed efficiency and intake as well as weight gain were depressed at the highest level (203).

In a second study 24 pigs were separated into groups fed 0, 220,000, 440,000, 660,000, or 880,000 I.U. of vitamin A palmitate/kg diet and were observed for 8 weeks. Symptoms of hypervitaminosis A appeared within 17.5, 32, and 43 days, for diets containing 880,000, 660,000 and 440,000 I.U./kg diet (203).

## III. Long-Term Studies

No information available

## IV. Special Studies

### Teratology

#### Introduction

Ray E. Shenefelt (10891) in a brief discussion of an "animal model for human disease" appearing in the American Journal of Pathology, 1972, notes possession of a bibliography of "167 papers on hypervitaminosis A teratogenesis in mammals in vivo". . . . . "more than 70 types of malformations are produced". Shenefelt summarizes:

> "Structures affected (and analogs of some human malformations) include the following: brain (anencephaly), spinal cord (spina bifida), face (cleft lip, cleft palate, micrognathia), eye (microphthalmia), all parts of the ear, teeth, salivary glands, aortic arch (malformations of several types), heart (ventricular septal defect), lungs, gastrointestinal tract (imperforate anus, omphalocele), liver and gallbladder, urinary system (renal "agenesis," hydronephrosis), genitalia, pituitary, thyroid, thymus, skull, vertebrae, ribs, extremities (phocomelia, digit malformations), muscles, and situs inversus."

The model is proposed for studies of sequential stages in the morphogenesis of malformations, but inasmuch as the biochemical basis for the toxicity of vitamin A is not known, other models are preferred for the biochemistry of vitamin A teratogenesis.

#### Experimental Teratology

(Representative studies of the teratological influence of hypervitaminosis A are abstracted in this section of the monograph; complete reports may be found in the documents section).

Kalter and Warkany (4511) examined the effects of hypervitaminosis A on the offspring of inbred mouse strains; previous investigations

had demonstrated a genetic modification of the malformations induced. Female mice of strains A/J, DBA/IJ, and C3H/J, were mated to males of their own strain, and when impregnated were given a single dose of 10,000 IU of vitamin A orally by syringe at days 7, 8, 9, 10, 11 or 12 after conception (one-third day had elapsed upon observing the copulation plug, and the dosage-days were actually 7 and one-third, 8 and one-third, etc.). The females were sacrificed at day 17 and one-third, several days before term. Resorption sites were counted and fetuses removed and examined macroscopically before staining of the skeleton. No strain differences in type or frequency of induced congenital malformations were seen.

Females (7) treated at 7 and one-third days had all but one of the 53 conceptions resorbed; the remaining 85 treated females produced 375 live offspring and 213 resorption sites. Widespread and complex syndromes of malformations were seen in the 34 females treated at 8 and one-third days; there were 99 live young and 139 resorption sites. At nine and one-third days, 18 females produced 97 young and 42 resorption sites. Later treatments (at 10, 11 and 12 and one-third days) produced malformations similar within the three groups, but almost completely different from the earlier treatments at 7, 8 or 9 and one-third days.

The various abnormalities of the earlier treatments included cleft palate and numerous anomalies of the head region, the neck (particularly the thymus) and tail. Fewer exencephalies were encountered than reported from rat studies; visible malformations of the CNS were seen, particularly a "crowded brain" defect, or brain too large for the cranium, but without a sign of hydrocephaly. The heart and great vessels presented serious malformations such as complete transpositions of vessels and ventricles of the heart. Urogenital malformations, absent umbilical arteries, and other arterial abnormalities were seen. In the later treatments, limb abnormalities (micromelia and oligodactyly) as well as absent skeletal parts were most frequently observed. Many of the abnormalities described have been seen in other studies, but the authors list some not previously described as experimentally produced and which occasionally occur in man: supernumerary upper and lower incisors, ankyloglossia lateralis, cervical thymus, coronary aneurysm, crossed ectopic kidney, rectovesical fistula, and absent umbilical artery.

A discussion of the findings from numerous teratogenic studies and the influence of environmental and hereditary factors completes the report which is also well-illustrated with photomicrographs.

The transfer of vitamin A from mother to offspring in mice and rats was studied by Moore (10741); liberal or restricted doses of the vitamin were given under different conditions in which the diets included 2.4 micrograms of A (retinol) per gram of standard, stock diet plus carotene from dried grass, or were deficient in A. Parental and offspring liver retinol was determined for each diet and results are shown in the following tables for the mouse studies:

Retinol transfer to their offspring by mother mice reared on a stock diet, rich in retinol.

| Expt. No. | Reproductive Stage | Diet | Liver retinol, µg | | | | |
|---|---|---|---|---|---|---|---|
| | | | Maternal | | Offspring | | |
| | | | per g | Total | per g | Total for mouse | Total for litter |
| 1 | Parturition | Stock | 200 | 400 | 5 | 0.4 | 2.8 |
| 2 | After 23 days lactation | Stock | 300 | 500 | 40 | 20 | 160 |
| 3 | After 27 days lactation | Stock until parturition, then A-free diet | – | – | 6 | 2 | (12)[1] |
| 4 | | | – | – | 12 | 4 | 20[2] |

[1] From estimations of 3 weanlings, with the number in the litter unrecorded, but taken as 6.
[2] From estimations on 2 weanlings out of a litter of 5.

Retinol transfer to their offspring by mother mice reared on a diet deficient in vitamin A, and given limited doses of retinyl acetate (100 µg once only) before mating.

| Expt. No. | Reproductive Stage | Diet | Liver retinol, µg | | | | |
|---|---|---|---|---|---|---|---|
| | | | Maternal | | Offspring | | |
| | | | per g | Total | per g | Total for mouse | Total for litter |
| 5 | After 10 days lactation | A-free for 3 months | 1.4 | 2.2 | 2.6 | 0.4 | 2 |
| 6 | | | 0.4[1] | 0.5 | 1 | 0.2 | 0.8 |

[1] Colour in $SbCl_3$ reaction faint and dull.

The data indicate that small amounts of maternal retinol are transfered to the offspring; a maternal reserve of 200-300 micrograms/gram liver yields only offspring reserves of 5 micrograms/gram soon after parturition. Mothers raised on a vitamin A-deficient diet for 3 months and then given a single dose (100 micrograms) of retinyl acetate before mating showed liver concentrations 10 days after parturition of 1.4-0.4 micrograms/gram; the sucklings showed 2.6-1 microgram/gram. Rats, similarly treated, but with pregnancy terminated before term, gave results with low retinol concentrations of the same order in both maternal and fetal livers: maternal, 3.4-4.8 micrograms/gain; fetal, 3.2-2.4. Thus, a high maternal liver retinol concentration may result in a ratio of 50:1, maternal/fetal; low maternal retinol results in a maternal/fetal ratio of about 1:1.

A recent study (1972) by Geelen (10507) was designed to determine whether vitamin A has a direct or indirect effect on the rat embryo, and how the vitamin is localized when given at different stages of pregnancy. The latter determination was performed by observing the intensity of fluorescence of vitamin A exposed to ultraviolet light. Pregnant female Wistar rats were given 50,000 IU vitamin A palmitate orally on the

7th, 8th or 9th days of pregnancy. The animals were sacrificed on the 10th, 11th or 12th day and implantations were removed, frozen and serially sectioned. Slides with sections were examined by fluorescent microscopy and were rated from "no fluorescence" to "bright fluorescence" in five steps. The following table shows the results:

*Vitamin A distribution[1] in hypervitaminotic rats*

| | Decidua basalis | Decidua capsularis | Ectoplacental cone | Area surrounding the basal part of the ectoplacental cone and early placenta | Cone of cell debris in the decidua capsularis | Embryo and visceral yolk sac | Parietal yolk sac | Reichert's membrane | Giant cells | Endometrium | Musculature of the uterus |
|---|---|---|---|---|---|---|---|---|---|---|---|
| 10th day | + + | + + + | ± | + + | ± | − | + | + | + + | + | + + |
| 11th day | + + | + + | ± | + + | | − | + | + | ± | + | + + |
| 12th day | ± | ± | − | + + | | − | + | + | ± | + | + |

+ + +, bright fluorescence in many large granules.
+ +, bright fluorescence, but in smaller granules that were more scattered in the tissue.
+, small granules, exhibiting dull fluorescence that faded within a few seconds.
±, slight fluo escence observed in just a few sections.
−, no fluorescence observed.

The vitamin A appeared to penetrate only the giant cells, Reichert's membrane and the parietal yolk-sac epithelium, thus, probably exercising its teratogenic effect indirectly on the embryo.

Morriss (10746) recently reported a study by light and electron microscopy of decidual and trophoblastic tissue taken from 8-day pregnant Wistar rats given 100,000 IU vitamin A palmitate subcutaneously, and sacrificed 5 hours later. Three controls and four treated rats were used. The spongy decidual tissue surrounding the embryo was indistinguishable in treated animals from that of controls when viewed by light microscopy, except for groups of lipid droplets frequently seen in capillaries. Electron microscopy revealed cells irregular in shape and densely packed; nuclei appeared rounded in section and were U-shaped or two to a cell. The endoplasmic reticulum cisternae appeared vacuolate. Trophoblastic cells were flattened and showed irregular nuclei. Cell surfaces were swollen, with folds and protuberances. Mitochondria appeared swollen also. Erythrocytes and leukocytes were frequently distorted or vacuolate, and degenerate cells and cell components were seen in the blood space around the embryo. Lipid droplets were common, often in groups. Maternal erythrocytes and thrombocytes seemed engulfed by trophoblast cells.

Morriss (10747) has also reported in another study, the results of single subcutaneous doses of 100,000 IU of retinyl palmitate given on one day of the 0-14 days of pregnancy in Wistar rats followed by sacrifice at day 20 and examination of the young removed alive from the uterus. The author lists the following results:

> Malformations of the central nervous system included exencephaly, meningoencephalocoele, and meningocoele. Eye malformations included exophthalmos, ablepharia, microphthalmos and cataract. Cleft palate occurred either alone or in association with facial malformations. Facial malformations included microstomia, short snout, and absence of the external ear. Limb malformations were short radius, syndactyly, and missing claws. The abnormalities were used only as indicators of the effects of the teratogen on development following the different times of administration, and were not graded according to severity.

Additional electron microscope observations of embryos taken from treated dams (at 20 days) were described under five headings: membrane changes (vacuoles and buds, cell death with membrane swelling, and nuclear irregularities); changes in the fluid balance of the embryo; lipid droplets; autophagic vacuoles; and mitochondrial changes. This latter material was described in the preceding paper.

Kochhar (4820) used black-hooded Long-Evans rats in studies of tissue differentiation in 13-day embryos from mothers given 60,000 IU vitamin A acetate by oral intubation on days 10, 11 and 12 of pregnancy. Three controls and 3 treated animals were used in an investigation of

tritiated thymidine (H3-thymidine) incorporation by embryonic tissues. The labeled thymidine was injected intracardiacally during the morning of the 13th day and the animals were sacrificed 2 hours later. The embryos were removed, fixed and sectioned and placed on beta-detection emulsion type slides and kept in the dark for 6 weeks. The uptake of thymidine is a measure of cell proliferation. Vitamin A-treated embryos showed various degrees of growth retardation, abnormal dorsal curvature, protrusion of the mesencephalic region of the brain, fewer than usual somites, and cellular disorganization. The posterior region was often severely stunted. Abnormalities were those described by Kalter and Warkany (4511). The major differences in the number of tritium-labeled cells between controls and treated were found in liver, loose cephalic mesenchyme, posterior palatine shelves; treated tissues always showed fewer labeled cells. Mitotic inhibition appears to be a major effect of hypervitaminosis A, but the precise role of vitamin A is not clear (written in 1968).

Giroud and Martinet (3192) have reviewed in considerable detail teratogenic studies of vitamin A up to 1956. Their own experiments involved 35,000 IU vitamin A (acetate or palmitate) given orally daily for 12 days, from the second to the fourteenth day of pregnancy in Wistar rats. Total abortions occurred in 90% of the cases. Lowering the daily dose to 20,000 IU produced some resorptions, but a number of abnormal embryos developed with anencephalies, anophthalmia or microphthalia, cleft palates and cataracts. Increasing the dose to 60,000 IU for 3 successive days at various stages of pregnancy and sacrificing the animals at 21 days demonstrated severe malformations similar to those already noted. Ninety rats were used in the last experiment and 615 embryos were examined. The effects of hypervitaminosis A were most pronounced at the early treatment (5th to 7th day), with 43% total resorptions and 20% of embryos present at 21 days dead; in later treatments (14 to 16 days or 18 to 20 days) only cleft palates or cataracts were seen. The various abnormalities are described in some detail, and a discussion - review is presented. A similarly detailed reatment of the nature of anencephalia was presented by the authors, Giroud and Martinet (3195) in 1957.

Murakami and Kameyama (6537, 6538), using two mouse strains, injected intraperitoneally 15,000 IU vitamin A at various stages of pregnancy. Six groups of 20 mice each were employed in the test, with a nontreated control group of 10 animals. Fetuses were removed at 19 days and examined for a particular anomaly, - a combination of defects called the oculodentofacial pattern. Micromelias were also recorded. The treatment and the distribution of malformations are shown in the following tables:

*Pregnancy Status of Mice Treated With 15,000 IU Vitamin A Water Miscible Solution at Different Stages of Pregnancy*

| Group Designation and Day of Pregnancy Treated | Number of Treated Mice | Total Number of Conceptuses | Total Number of Fetuses | Mean Litter Size | Intrauterine Mortality | | Fetuses Without Gross Malformations | Fetuses with Gross Malformations | Fetuses Retarded in Development |
|---|---|---|---|---|---|---|---|---|---|
| | | | | | Dead Fetuses | Resorptions—Remnants | | | |
| A-8 | 20 | 191 | 15 | 0.8 | 1 | 175 | 0 | 15 | 5 |
| | | | | | 92.2 % | | | (100 %) | (33.3 %) |
| B-9 | 20 | 177 | 148 | 7.4 | 1 | 28 | 0 | 148 | 12 |
| | | | | | 16.4 % | | | (100 %) | (8.1 %) |
| C-10 | 20 | 203 | 143 | 7.3 | 20 | 40 | 12 | 131 | 21 |
| | | | | | 29.6 % | | (8.4 %) | (91.6 %) | (14.7 %) |
| D-11 | 20 | 188 | 163 | 8.2 | 8 | 17 | 18 | 145 | 29 |
| | | | | | 13.3 % | | (11.0 %) | (89.0 %) | (17.7 %) |
| E-12 | 20 | 179 | 167 | 8.4 | 5 | 7 | 32 | 135 | 10 |
| | | | | | 6.7 % | | (19.2 %) | (80.8 %) | (6.0 %) |
| F-13 | 20 | 195 | 182 | 9.1 | 2 | 11 | 143 | 39 | 3 |
| | | | | | 6.7 % | | (78.6 %) | (21.4 %) | (1.7 %) |
| Nontreated control | 10 | 111 | 102 | 10.2 | 0 | 9 | 100 | 2 | 0 |
| | | | | | 8.1 % | | (94.0 %) | (2.0 %) | |

*Distribution of Malformations in Mouse Fetus Caused by Hypervitaminosis-A in Mother Mouse During Pregnancy*

| | Malformation Classification | Day of Pregnancy When Treated | | | | | | |
|---|---|---|---|---|---|---|---|---|
| | | 8th (Group A) | 9th (Group B) | 10th (Group C) | 11th (Group D) | 12th (Group E) | 13th (Group F) | Control |
| CNS | Exencephalia | 2(13.33 %) | 2(1.35 %) | | | | | |
| | Brain hernia | | | 1(0.7 %) | | | | |
| | Hydrocephalus | | | 4(2.8 %) | | | | |
| | Microcephalia * | | 77(52.03 %) | 10(6.99 %) | | | | |
| | Spina bifida | 2(13.33 %) | | 1(0.7 %) | 3(1.84 %) | | | |
| Eye | Anophthalmos | 3(20.0 %) | | 5 } (6.29 %) | | | | |
| | Microphthalmos | | | 4 | | | | |
| | Exophthalmos * | 14(93.33 %) | 108(72.97 %) | 15(10.49 %) | | | | |
| | Open eye * | 9(60.00 %) | 66(44.59 %) | 2(1.4 %) | | | | |
| Face | Short snout | | 84(56.76 %) | 38(26.57 %) | 17(10.43 %) | 8(4.79 %) | | |
| | Mandible malformations | | | | | | | |
| | Abnorm big | | 21 } (51.76 %) | 5 } (24.48 %) | 20(12.27 %) | 8 } (17.96 %) | | |
| | Incomplete | | 54 | 29 | | 22 | | |
| | Agnathia | 1(6.67 %) | 16 | 1 | | | | |
| | Mouth malformations | | | | | | | |
| | Microstomia | 2 } (73.33 %) | 72 } (81.76 %) | 8(5.59 %) | | 9(5.39 %) | | |
| | Anostomia | 9 | 49 | | | | | |
| | Auricula malformations | | | | | | | |
| | Microtia | | 30 } (70.27 %) | 6 } (13.29 %) | | | | |
| | Anotia | 12(80.00 %) | 29 | 13 | 4(2.45 %) | | | |
| | | | 45 | | | | | |
| Trunk | Cleft palate | | 27(18.24) † | 98(68.53 %) | 122(74.88 %) | 113(67.66 %) | 33(18.13 %) | 2(1.20 %) |
| | Abdominal hernia | | | 3(2.1 %) | | | | |
| | Anal atresia | | 27(18.24 %) | 2(1.4 %) | | | | |
| Tail | Tailless | 3 } (50.00 %) | 1 } (40.54 %) | 1 } (30.07 %) | | 12(7.26 %) | | |
| | Short-tail | 9 | 56 | 41 | | | | |
| | Curvature | | 1 | 1 | | | | |
| Limb and digit | Forelimb malformations | | | | | | | |
| | Micromelia (higher grade) | | 12 } (34.46 %) | 73 } (72.03 %) | 98 } (76.07 %) | | | |
| | Micromelia (lower grade) | | 39 | 30 | 26 | 9(5.39 %) | | |
| | Forelimb digit malformations | | | | | | | |
| | Ectrodactylia | | 13(8.78 %) | 99(69.23 %) | 126(77.30 %) | 28(16.77 %) | 2(1.1 %) | |
| | Brachydactylia | 5(33.33 %) | 26(17.57 %) | 5(3.5 %) | 10(6.13 %) | | | |
| | Syndactylia | | 3(2.03 %) | 25(17.48 %) | 7(4.29 %) | | | |
| | Hindlimb malformations | | | | | | | |
| | Micromelia (higher grade) | 2(13.33 %) | 2 } (25.40 %) | 35 } (51.75 %) | 106 } (71.17 %) | 7 } (40.12 %) | | |
| | Micromelia (lower grade) | | 35 | 39 | 10 | 60 | | |
| | Clubfoot (excluding micromelias) | 1(6.06 %) | 3(2.03 %) | 12(8.39 %) | 4(2.45 %) | | | |
| | Hindlimb digit malformations | | | | | | | |
| | Ectrodactylia | | 8(5.41 %) | 54(37.76 %) | 103(63.19 %) | 75(44.91 %) | 2(1.1 %) | |
| | Brachydactylia | | | 17(11.89 %) | 4(2.45 %) | 11(6.59 %) | 3(1.66 %) | |
| | Syndactylia | 1(6.06 %) | 2(1.35 %) | 14(9.79 %) | 18(11.04 %) | 9(5.4 %) | | |
| | Annular groove of 5th digit | | | | 7(4.29 %) | | | |

* These malformations were associated.

† Only 27 or 18.2 % of 148 fetuses could be examined for cleft palate, and all had the defect. The remaining fetuses had microstomia or anostomia and the palate could not be studied.

The gross malformations caused by 15,000 IU vitamin A given at various days of pregnancy are shown in the following figure:

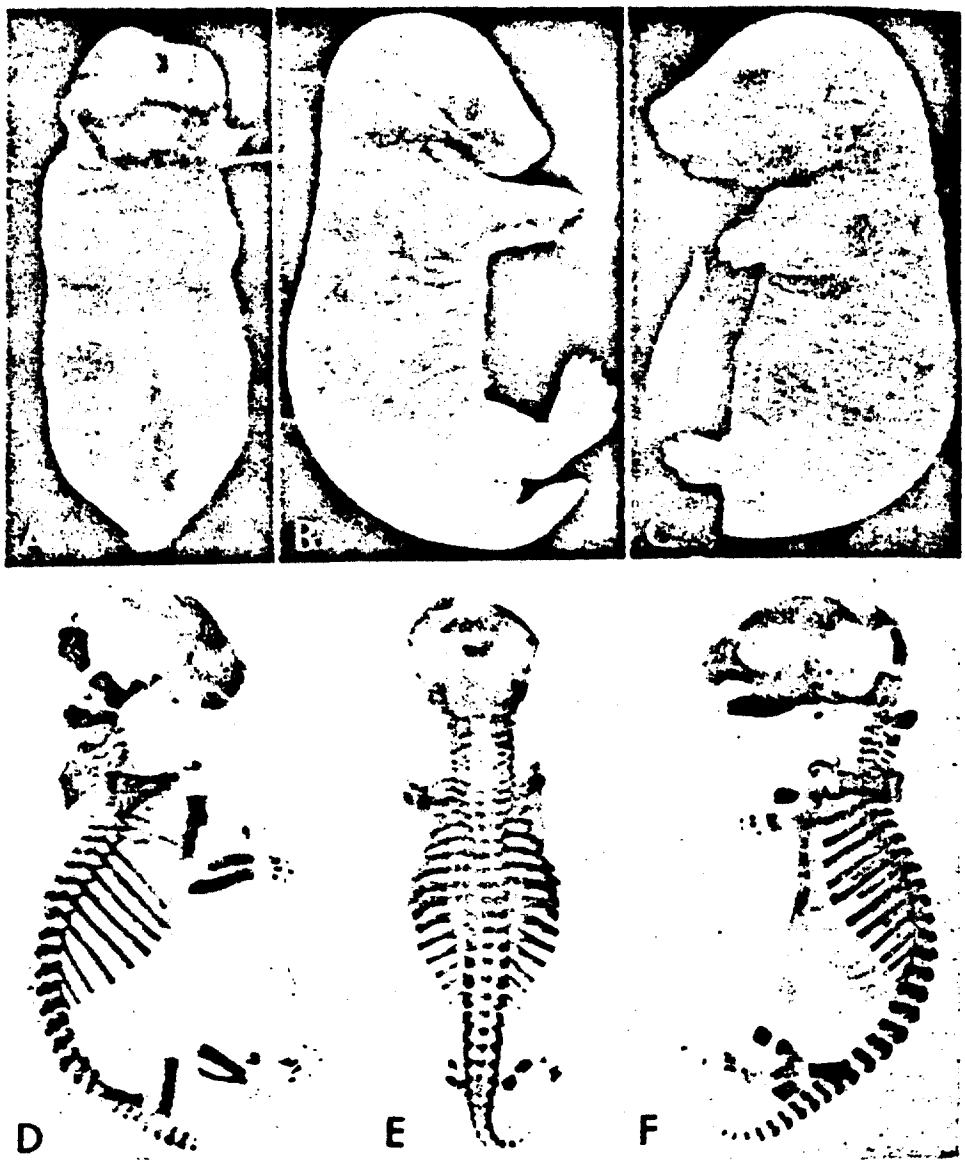


*A*, abnormal fetus with exencephalia, anostomia, exophthalmos, spina bifida aperta, and taillessness after intraperitoneal injection of the mother with 15,000 IU vitamin A on the eighth day of pregnancy.

*B*, abnormal fetus with microcephalia, agnathia, anotia, exophthalmos, open eye, brachydactylism and short-tailedness after intraperitoneal injection of the mother with 15,000 IU vitamin A on the eighth day of pregnancy.

*C*, abnormal fetus with micromelia after similar treatment on the 11th day of pregnancy. This fetus also had micrognathia and cleft palate.

*D*, skeleton of an abnormal fetus with similar cranio-facial pattern shown in B after similar treatment on the ninth day of pregnancy. The shape of the cranial bone, especially the frontal, temporal, and premaxillar bones are abnormal. A rudimental mandibular bone is fused with the maxilla.

*E*, skeleton of an abnormal fetus with malformed vertebrae and ribs after similar treatment on the tenth day of pregnancy. Rami of the posterior arch of the cervical vertebrae are involved in fragmentations and the rib has buds. Bones forming the limb-girdle and limbs are also involved in deformity.

*F*, skeleton of an abnormal fetus with micromelia after similar treatment on the 11th day of pregnancy. Long bones of the extremity are involved in malformation: ossification of the humerus and femur is absent. Bones of the forearm and lower leg are also malformed.

Mauer (5924) reported the effects of daily doses intubated orally of from about 1250-5000 IU vitamin A for up to 6 months on females of both normal and hairless strains of mice, mated to hairless males. Reproductive performance and congenital malformation data are shown in the following table:

*Effect of Vitamin A on Reproductive Performance and on the Production of Congenital Malformations in Normal and Hairless Mice*

*Influence de la vitamine A sur les possibilités de reproduction et sur la formation de difformités de souris normales et chauves*

*Einfluß von Vitamin A auf die Reproduktionsfähigkeit und auf die Erzeugung von Mißbildungen in normalen und haarlosen Mäusen*

| Treatment group[1] | No. of ♀ treated | Total litters[2] | No. born | Av. litter size | No. born dead[3] | No. with congenital defect[3] |
|---|---|---|---|---|---|---|
| | | | NORMAL | | | |
| 1 | 19 | 31 (16) | 165 | 5.3 | 28 (17) | 29 (17.8) |
| 2 | 7 | 10 (6) | 76 | 7.6 | 4 (5.3) | 0 (0.0) |
| 3 | 4 | 3 (2) | 18 | 6.0 | 0 (0.0) | 0 (0.0) |
| 4 | 2 | 1 (1) | 6 | – | 1 (16.6) | 0 (0.0) |
| 5 | 7 | 10 (7) | 79 | 7.9 | 10 (12.7) | 2 (2.5) |
| | | | HAIRLESS | | | |
| 1 | 7 | 4 (3) | 17 | 4.3 | 9 (53) | 2 (11.8) |
| 2 | 5 | 8 (2) | 43 | 5.4 | 6 (14) | 0 (0.0) |
| 3 | 3 | 1 (1) | 4 | – | 0 (0.0) | 0 (0.0) |
| 4 | 1 | 3 (1) | 24 | 8.0 | 3 (12.5) | 0 (0.0) |
| 5 | 5 | 5 (5) | 32 | 6.4 | 10 (31.3) | 2 (6.3) |

[1] Treatment: 1, oily vitamin A, continuously administered orally
2, corn oil (control), continuously administered orally
3, oily vitamin A, continuously administered parenterally (i.m.)
4, corn oil (control), continuously administered parenterally (i.m.)
5, aqueous vitamin A, administered parenterally (i.m.) only during pregnancy (D9 through D19)

[2] Number of females producing litters in parenthesis.

[3] Percentage affected in parenthesis.

Intramuscular injections of about 1200 or 2400 IU vitamin A daily for up to 6 weeks given to 4 normal and 3 hairless females resulted in 3 females giving birth to 22 apparently normal offspring, differing little from control data. The results were generally those found by other investigators; the author observed that the treated hairless females produced defective young, whereas no spontaneous malformations had been seen in more than 70 litters (over 400 offspring) from the stock mutants (hairless).

Vichi et al. (9446) have reviewed the major findings of investigators up to 1965 and contributed their own data from Wistar rat studies in which vitamin A palmitate was given orally by intubation at doses of 50,000 IU/day for 3 days during pregnancy (the 10th, 11th, 12th; the 11th, 12th and 13th day). Ten animals were used in each of the two tests, and 5 rats served as controls. The animals were sacrificed at day 21. Ten litters from the first group (10-12 day), varying from 3 to 10 embryos, contained anencephalies, cleft palates, bifid spine with meningomyoloceles, and resorptions. The second group (11-13 day) produced 10 litters with from 6 to 11 embryos showing cleft palates and resorptions, with a few slight meningoceles. Control embryos numbered 53, all morphologically normal.

Comparisons were drawn in a general, comprehensive discussion of the hypervitaminosis A effect in different animals at different dosages and methods of administering the vitamin.

The teratogenic property of vitamin A does not depend upon the large doses typically employed by investigators, according to Giroud and Martinet (3206), who tested doses of 500, 250 and 100 IU in mice, each dose level being given daily for three days during pregnancy (8th-10th days). The 500 IU dose given to 53 mice resulted in 11% total abortions; 2% resorptions; 10% anencephalies; and miscellaneous malformations, 36%. The 250 IU dose given 10 mice produced 28% total abortions; 63% deaths or resorptions; 19% anencephalies; and 18% malformations of the face. With 100 IU given to 31 mice, the results were: 9.9% total abortions; 7.5% deaths and resorptions; and miscellaneous abnormalities in none. The dose of 100 IU was given to another group of mice for 5 consecutive days (7th to 11th day) of pregnancy and produced 30% total abortions, and 7.5 living embryos per litter, without malformations. Apparently, 100 IU of vitamin A was not teratogenic to the mice, but resulted only in abortions and some resorption. It was noted that the doses of 500 and 250 IU given to mice equaled about 12,500 and 6250 IU/kg body weight; current (1962) therapeutic doses in humans run about 2500 to 3000 IU/kg, which is about the equivalent of the 100 IU dose given mice, or about 2500 IU/kg. An instance in which a woman was given, in a single dose, 350,000 IU (7,000 IU/kg) in therapy was mentioned. Sharer (NAS/NRC information) reported in 1963 that doses of at least 150,000 IU/kg were required in mice and rats to produce fetal mortality and malformations in the young. This was further substantiated by Rossbach, from the same source, who reported similar findings in mice, in contradiction to the Giroud and Martinet report of 1962.

The investigator usually credited with the first demonstrations of the teratogenicity of hypervitaminosis A is Sidney Cohlan (1757), who performed experiments with rats in the early 1950's. The effects of vitamin A deficiency in pregnancy in producing abnormalities in the fetus had been established. Cohlan had observed in the course of investigating skeletal changes in mature rats with hypervitaminosis A, that pregnant animals produced offspring with congenital malformations.

Continued study indicated a high incidence of congenital abnormalities in offspring from mothers given large doses of vitamin A during various stages of pregnancy; encephaly, hydrocephaly, spina bifida, cleft palate, eye malformations, and shortening of mandible and maxilla were observed. Cohlan's findings have since been duplicated in many studies, but his papers reported in 1953-54 remain "classics" in teratology. In 1961, Cohlan and Stone (1758) tested the effect of various endocrines on the teratogenicity of hypervitaminosis A in the Wistar rat. The vitamin dosage was either aqueous (25,000 IU) or in oil (60,000 IU). and was administered by gastric tube daily during days 8-13 of gestation. Five experiments were performed:

1. Growth Hormone. Ninety pregnant rats comprised two groups, one given 25,000 IU vitamin A, plus 4 mg growth hormone twice daily - the controls received either the vitamin A or the growth hormone. The results indicated no influence of the hormone on vitamin A teratogenicity.

2. Parathyroidectomy. Forty rats were parathyroidectomized on day 3 of gestation, half were allowed to proceed to full term, half received the vitamin A challenge. The incidence of brain malformation was essentially the same in both groups, 40% in offspring of parathyroidectomized - vitamin A rats, and 34% in normal - vitamin A rats.

3. Thymectomy. Twenty-four rats were thymectomized, half otherwise untreated, half given vitamin A. No differences between the groups were seen.

4. Cortisone and Insulin. Two hundred forty rats were divided into 4 groups of 60 each: Group 1, controls, half were given aqueous vitamin A, half the oily vitamin A; Group 2, similarly treated, plus 20 mg subcutaneous cortisone daily from 9th to 12th day of gestation; Group 3, similar to Group 2 with added 1.5 u protamine zinc insulin from 9th to 12th day; Group 4, as Group 1, plus 1.5 u insulin, no cortisone. Neither cortisone nor insulin influenced the teratogenesis of vitamin A.

5. Adrenalectomy. Fifty pregnant rats were given bilateral adrenalectomies on day 3 of gestation and divided into 2 groups. One group proceeded without further treatment to full term; the other group was given a teratogenic dose of vitamin A. The malformation incidence was not significantly different (47% in treated, 39% in vitamin A, only).

Takekoshi (8956) reported that 50,000 IU vitamin A given intramuscularly to Wistar rats (males) resulted in an increase in the thyroid weight and an elevation of iodine ($I^{131}$) uptake. Given simultaneously with methylthiouracil, the vitamin A resulted in more remarkable goitres than in animals given the methylthiouracil alone. The vitamin also resulted in increased adrenal weight; and combined with methylthiouracil

resulted in even greater adrenal weights.

Combined vitamin A and methylthiouracil given intramuscularly to female ddN mice during days 10 to 13 of pregnancy resulted in a significantly greater increase in malformations of offspring than was found in animals given only vitamin A. The methylthiouracil alone produced no abnormalities. The data are shown in the table below:

TABLE 1

*Combinative teratogenic effect of vitamin A and methylthiouracil on mice embryos*

| *Group* | *Treatment* | *Number of dams* | *Number of living embryos* | *Number of young with cleft palate (%)* | *Number of young with finger malformation (%)* | *Number of young with toe malformation (%)* | *Number of young with any kind of malformation (%)* |
|---|---|---|---|---|---|---|---|
| 1 | Tween 80 30 mg. | 12 | 104 | 0 | 0 | 0 | 0 |
| 2 | Vitamin A 10,000 I.U. | 11 | 94 | 32 (34·0%) | 14 (14·1%) | 65 (69·1%) | 67 (71·2%) |
| 3 | MTU 8 mg. | 10 | 80 | 0 | 0 | 0 | 0 |
| 4 | Vitamin A 10,000 I.U. and MTU 8 mg. | 12 | 60 | 60 (100%) | 55 (90·2%) | 60 (100%) | 60 (100%) |

Various explanations for aspects of the malformations induced in the embryonic body by hypervitaminosis A have been advanced; the possibility of a condition affecting primarily the presomite and axial non-segmented mesoderm with secondary involvement of the somites was investigated by Marin-Padilla (5794), using hamsters. Twenty pregnant females, in five groups of four each, were employed. Two hamsters of each group served as controls, two were treated with 20,000 IU vitamin A by gavage on the 8th day of gestation. The first group was sacrificed at 3 hours after administration of the vitamin; second group at 6; third group at 8; fourth group at 10; and the fifth at 12 hours. The uterus of each animal was dissected and decidual tissues containing embryonic tissues were prepared for microscopic examination.

The first group (3 hours) showed no appreciable effects; the second (6 hours), minimal changes seen in cephalic mesodermal tissue; the third (8 hours), more marked alterations in cephalic mesoderm but no distinct changes evident in somites; the fourth (10 hours), all mesodermal elements affected, the cephalic mesoderm most severely, with cellular

cytoplasm greatly shrunken and reduced mitoses and cell numbers, except in neural-ectodermal tissue which appeared normal, and other generalized changes were seen; the fifth (12 hours), some recovery from the "teratogenic insult" had occurred, but the mesodermal alterations, cytoplasmic shrinking and other changes were still present.

In summary, hypervitaminosis A in the pregnant hamster produces rapid mesodermal changes (within 6 hours) which reach maximum effect and malformation at about 10 hours. The first embryonic feature affected is the cephalic mesoderm, followed by alterations of the axial non-segmented mesoderm of the embryonic body, and finally in the somitic mesoderm.

Marin-Padilla and Ferm (5793) in an earlier paper laid the groundwork for the foregoing study. Several experiments were performed: in one, the relative sensitivities of embryonic stages in the hamster to hypervitaminosis A (20,000 USP) were tested. The following tables show the results:

TABLE 1

*Number of treated pregnant hamsters with the total number of living, abnormal and dead fetuses obtained per treated (vitamin A) day of gestation*

| | *5th* | *6th* | *7th* | *8th* | *9th* | *10th* | *11th* | *Controls* |
|---|---|---|---|---|---|---|---|---|
| Mother treated | 4 | 4 | 3 | 10 | 4 | 5 | 3 | 7 |
| Living fetuses | 45 | 53 | 14 | 89 | 40 | 48 | 33 | 71 |
| Abnormal fetuses | 0 | 4 | 5 | 58 | 20 | 36 | 0 | 0 |
| Resorbed fetuses | 2 | 2 | 23 | 34 | 2 | 14 | 2 | 4 |

TABLE 2

*Types and percentages of malformations obtained per treated (vitamin A) day of gestation in the golden hamster*

| *Day* | *Anencephaly* | *Anopia* | *Bulging eye* | *Spina bifida* | *Rib defect* | *Harelip* | *Limb defect* | *Hernia* |
|---|---|---|---|---|---|---|---|---|
| 5th | — | — | — | — | — | — | — | — |
| 6th | — | — | — | — | 4 (7·5) | — | — | — |
| 7th | 1 (7·1) | 3 (21·4) | — | 1 (7·1) | — | 3 (21·4) | — | — |
| 8th | 14 (15·7) | 2 (2·2) | 28 (31·4) | 11 (12·3) | 33 (37·0) | 2 (2·2) | — | 2 (2·2) |
| 9th | — | — | 18 (45·0) | — | 3 (7·5) | — | — | — |
| 10th | — | — | — | — | 5 (10·4) | — | 36 (75·0) | — |
| 11th | — | — | — | — | — | — | — | — |

In the second experiment, 20,000 USP vitamin A was given by gavage on the 8th day of gestation, and the animals were sacrificed at 6, 12 and 24 hours and 4, 5 and 6 days. Serial sections of gestation sacs or of later isolated embryos were made on the 8th or 9th day of gestation for microscopic study. The tissue preparations of 6 hour embryos show no appreciable histologic changes; the 12 hour preparations showed some

cellular necrosis of cephalic and adjacent somites but generally the observed alterations were minimal; massive, somitic cellular necrosis was seen at 24 hours, but prediction of the type of future malformation was not possible. Numerous, typical malformations were shown in the later embryos of the 12th-14th day of gestation (4-6th day after treatment), particularly cranioschisis and occult sacral rachischisis. Ferm (2709) found that placing the hamsters, 7 days pregnant, in low temperature (0 to 2°C) and administering 20,000 USP vitamin A at 8 hours or 24 hours later, and returning the animals to room temperature on the 9th day of gestation, resulted in a markedly increased embryo resorption. In addition, major malformations not previously seen from hypervitaminosis A alone were observed: sympodia or fusion of the lower extremities; a combined severe lumbosacral spina bifida and eventration of the anterior abdominal wall; and marked exencephaly. Ferm (2710) also reported an occurrence of three sets of conjoined twins in hamsters given known, potent teratogens: vitamin A, dimethyl sulfoxide, and urethan. The vitamin A, 20,000 IU by gavage, produced the twin-set which was recovered from the mother on the ninth day of gestation; the twins were joined at the thorax, and were somewhat delayed in development, being about half a day behind normal time. Ferm regards monozygous twining itself a "manifestation of a developmental malformation".

Robens (7705) confirmed and expanded the foreging studies; both female hamsters and guinea pigs were given various doses of vitamin A during the period of organogenesis in pregnancy. The data are summarized in the following, self-explanatory tables:

TABLE 1

EFFECTS OF HYPERVITAMINOSIS A ON FETAL DEVELOPMENT IN THE HAMSTER

| Day of gestation treated | Dose by oral intubation (USP units/kg) | No. of mothers | Live fetuses | | No. dead fetuses at term | No. resorption sites | Fetal mortality (%) | Av. fetal weight (g) | % of fetuses dead in 6 hr | Terata | |
|---|---|---|---|---|---|---|---|---|---|---|---|
| | | | Total | Per litter | | | | | | No. | % |
| 7 | 400,000 | 5 | 36 | 7.2 | 5 | 6 | 23.4 | 1.8 | 100 | 41 | 100 |
| 7 | 200,000 | 17 | 139 | 8.2 | 14 | 32 | 24.9 | 2.0 | 63.3 | 123 | 88.4 |
| 7 | 150,000 | 4 | 38 | 9.5 | 9 | 4 | 25.5 | 2.1 | 76.5 | 29 | 61.5 |
| 7 | 100,000 | 5 | 55 | 11.0 | — | — | — | 2.2 | 7.3 | 14 | 25.5 |
| 7 | 75,000 | 4 | 50 | 12.5 | — | 2 | 3.8 | 2.3 | 4.0 | 0 | — |
| 8 | 400,000 | 7 | 65 | 9.3 | — | 15 | 18.8 | 2.1 | 67.7 | 65 | 100 |
| 8 | 300,000 | 5 | 47 | 9.4 | 1 | 6 | 13.0 | 2.0 | 74.5 | 47 | 100 |
| 8 | 200,000 | 23 | 248 | 10.8 | — | 17 | 9.7 | 2.0 | 33.5 | 196 | 79.0 |
| 8 | 100,000 | 3 | 32 | 10.7 | — | — | — | 2.3 | — | 0 | — |
| 9 | 400,000 | 13 | 137 | 10.5 | 1 | 7 | 5.5 | 2.1 | 31.4 | 91 | 65.9 |
| 9 | 200,000 | 13 | 138 | 10.6 | 2 | 2 | 2.9 | 2.2 | 1.5 | 73 | 52.1 |
| 9 | 100,000 | 3 | 31 | 10.3 | — | — | — | 2.3 | — | 0 | — |
| 10 | 400,000 | 5 | 48 | 9.6 | — | 5 | 9.4 | 2.1 | 6.3 | 48 | 100 |
| 6–10 | 400,000/day | 3 | — | — | — | 32 | 100 | — | — | 0 | — |
| 6–10 | 200,000/day | 8 | 42 | 5.3 | — | 54 | 56.3 | 1.9 | 83.3 | 32 | 76.2 |
| 6–10 | 150,000/day | 5 | 45 | 9.0 | 2 | 8 | 18.2 | 2.0 | 62.2 | 29 | 61.7 |
| 6–10 | 100,000/day | 8 | 78 | 9.8 | 3 | 4 | 8.2 | 2.2 | 5.1 | 6 | 7.4 |
| 6–10 | 75,000/day | 5 | 57 | 11.4 | 1 | — | 1.7 | 2.1 | 10.5 | 3 | 5.2 |
| Controls | | 99 | 1081 | 10.9 | 3 | 29 | 2.9 | 2.3 | 0.6 | 4 | 0.4 |

TABLE 2

SPECIFIC FETAL ANOMALIES ASSOCIATED WITH HYPERVITAMINOSIS A IN THE HAMSTER

| Day of gestation treated | Dose by oral intubation (USP units/kg) | No. of mothers | No. malformed/ total No. fetuses | Exen-cephaly | Mal-formed heads | Bulging eyes | Cleft palate | Spina bifida | Fused ribs | Short tail | Leg anoma-lies | Umbil-ical hernia |
|---|---|---|---|---|---|---|---|---|---|---|---|---|
| 7 | 400,000 | 5 | 41/41 | 8 | 36 | 41 | — | 16 | 16 | 30 | — | 1 |
| 7 | 200,000 | 17 | 123/153 | 16 | 63 | 61 | 2 | 10 | 38 | 1 | — | 2 |
| 7 | 150,000 | 4 | 29/47 | 11 | 7 | 8 | 2 | 1 | 17 | — | — | 1 |
| 7 | 100,000 | 5 | 14/55 | — | 12 | 5 | — | — | — | — | — | — |
| 7 | 75,000 | 4 | 0/50 | — | — | — | — | — | — | — | — | — |
| 8 | 400,000 | 7 | 65/65 | — | 5 | 2 | — | 1 | — | 65 | 1 | 3 |
| 8 | 300,000 | 5 | 47/48 | — | 3 | 5 | 10 | — | — | 47 | — | — |
| 8 | 200,000 | 23 | 196/248 | — | 7 | 8 | 4 | 1 | 1 | 188 | 1 | 2 |
| 8 | 100,000 | 3 | 0/32 | — | — | — | — | — | — | — | — | — |
| 9 | 400,000 | 13 | 91/138 | — | — | — | — | — | 21 | 2 | 89 | — |
| 9 | 200,000 | 13 | 73/140 | — | 1 | — | 4 | — | — | — | 71 | 1 |
| 9 | 100,000 | 3 | 0/31 | — | — | — | — | — | — | — | — | — |
| 10 | 400,000 | 5 | 48/48 | — | 3 | — | 5 | — | — | — | 48 | — |
| 6–10 | 400,000/day | 3 | 0/0 | — | — | — | — | — | — | — | — | — |
| 6–10 | 200,000/day | 8 | 32/42 | — | 3 | 26 | 14 | 1 | 10 | — | — | — |
| 6–10 | 150,000/day | 5 | 29/47 | — | 4 | 1 | 2 | — | 26 | — | — | — |
| 6–10 | 100,000/day | 8 | 6/81 | — | — | — | — | 1 | 5 | — | — | — |
| 6–10 | 75,000/day | 5 | 3/58 | — | — | — | 1 | 1 | 1 | — | — | — |
| Controls | | 99 | 4/1081 | 1 | 1 | — | — | — | 1 | — | — | 1 |

TABLE 3

EFFECTS OF HYPERVITAMINOSIS A ON FETAL DEVELOPMENT IN THE GUINEA PIG (ORAL ADMINISTRATION)[a]

| Day of treatment | No. of litters | No. malformed/ total No. fetuses | Av. fetal weight | Anomalies found |
|---|---|---|---|---|
| 14 | 4 | 11/13 | 95.8 | Agnathia, crooked incisors, malformed pinna, ataxia, hypoplastic tympanic bullae, microcephaly |
| 15 | 7 | 21/28 | 95.0 | Agnathia, crooked incisors, malformed pinna, hypoplastic tympanic bullae, uterus unicornis, microcephaly, ataxia, atresia ani |
| 16 | 8 | 13/33 | 83.7 | Short tails, shallow thoracic cavity, malformed pinna, hyperdontia, microcephaly, agnathia, synotia, ataxia |
| 17 | 6 | 10/26 | 85.3 | Short tails (missing coccygeal vertebrae), agnathia |
| 18 | 5 | 2/16 | 95.0 | Arthrogryposis hind legs—shortened crooked tibia and fibula |
| 19 | 5 | 5/14 | 96.4 | Short bowed front legs, dicheiria and syndactylia of front toes |
| 20 | 4 | 9/13 | 89.6 | Short and bowed front and hind legs |
| Controls | 59 | 1/226 | 88.9 | Conjoined twins |

[a] Treatment in all cases was 200,000 USP units/kg.

These data, in contrast to those of Marin-Padilla and Ferm, show that additional abnormalities in hamsters can be produced by higher doses of vitamin A and by examination of term hamster fetuses. Extremely retarded limb and tail development, imperforate ani, hydronephrosis and anephrosis were not earlier reported.

By mid-1960's the effect of hypervitaminosis A on the CNS of the mammalian embryo during the early stages of development had been well documented; no information was available on the vitamin's influence on the development of the cerebral cortex during the final stages of pregnancy, according to Langman and Welch (5152) in 1966. Using Swiss-Webster mice, they studied the influence of excess vitamin A on the neuro-epithelial cells lining the lateral ventricle of the cerebral hemisphere during late stages of pregnancy. A dose of 10,000 USP units of vitamin A was given orally to the pregnant mice on the 14th and 15th days of gestation. On day 15, an injection of tritiated thymidine (5 microcuries/g body weight) was given, followed by hourly intervals of from 1 to 18 hours after injection by sacrifice. Embryos were prepared for sectioning; sections were placed on radioautographic emulsion and exposed for 27-90 days. At 14 days, cell proliferation in the cerebral cortex is primarily restricted to the neuro-epithelial cells surrounding

the ventricle. The vitamin A treatment was observed to inhibit mitosis and DNA synthesis, prolonging the cell cycle by about 40% of the normal value. A schematic comparison of normal and treated cerebral cortex tissue sections is shown below:

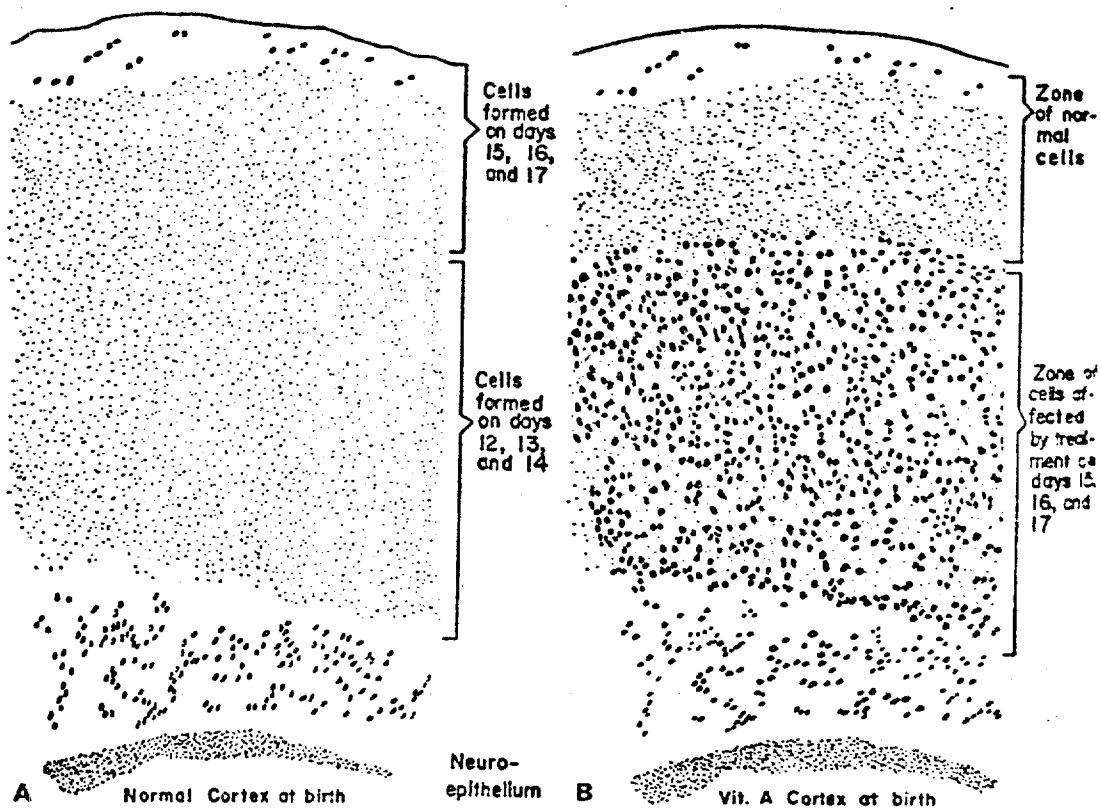


**Fig. 12** Schematic drawing of a section of the cerebral cortex of a normal postnatal mouse (A) and similar mouse treated with excess vitamin A on days 15, 16 and 17 of gestation (B). The neuroblasts affected by the vitamin A treatment are those formed on days 12, 13 and 14, and not those formed by the neuro-epithelium on days 15, 16 and 17.

The same investigators, Langman and Welch (5159), studied the effects of hypervitaminosis A on the CNS of embryos in female Wistar rats, treated during days 8, 9 and 10 of pregnancy with a dose of 30,000 to 60,000 USP units vitamin A. Swiss-Webster mice were similarly treated with various doses on two or three successive days of pregnancy. A comparison of data is shown in the following tables:

TABLE 1

*Effect of hypervitaminosis A on the rat embryo*

| No. of animals | Days of treatment | Vit. A in U.S.P. units | Implantations | Resorptions | CNS abnormalities |
|---|---|---|---|---|---|
| 4 | 8,9,10 | 60,000 | 48 | 38(79%) | 9(19%) |
| 5 | 8,9,10 | 50,000 | 54 | 38(70%) | 7(13%) |
| 6 | 8,9,10 | 40,000 | 70 | 44(63%) | 13(19%) |
| 12 | 8,9,10 | 30,000 | 176 | 77(44%) | 45(26%) |
| | | Controls | | | |
| 9 | 8,9,10 | 0.6–1.2 ml saline | 97 | 4(4%) | 1(1%) |
| 5 | 8,9,10 | 0.6–1.2 ml vit. A vehicle | 63 | 2(3%) | 0 |

TABLE 2

*Effect of hypervitaminosis A on the mouse embryo*

| No. of animals | Days of treatment | Vit. A in U.S.P. units | Implantations | Resorptions | CNS abnormalities |
|---|---|---|---|---|---|
| 7 | 7 | 6000/7000 | 74 | 34(46%) | 3(4%) |
| 6 | 8 | 6500/7500 | 69 | 18(26%) | 0 |
| 5 | 7,8 | 6000/4000 | 42 | 29(69%) | 0 |
| 6 | 7,8,9 | 4000 | 81 | 26(32%) | 3(4%) |
| 7 | 8,9 | 6000 | 43 | 13(31%) | 1(2.3%) |
| 2 | 7,8,9 | 3000 | 26 | 0 | 0 |

Among the CNS abnormalities, failure of the neural groove to close was most significant. Exencephaly appeared in 26% of all implanted embryos in the rat studies; a few showed myeloschisia.

Cleft palate frequently accompanies other congenital malformations induced in embryos by various teratogenic procedures, but only in cortisone treated mice had it appeared singly in early (1950's) experiments, according to Kochhar and Johnson (4817) in 1965. Vitamin A treatment has produced a high incidence of cleft palate, rarely with other malformations, however, and was subject to comparison with the action of cortisone in rats on the morphological sequence of cleft palate by Kochhar and Johnson. The effects of maternal hypervitaminosis A on $S^{35}$-incorporation into the rat embryos was also studied. A total of 80 black-hooded pregnant female rats were used. On days 9 or 10 of gestation, and continuing for 3 days, 60,000 IU vitamin A were administered by oral intubation. For studies of cleft palate, treated animals were variously sacrificed at 15, 16, 17 or 20 days of gestation and fetuses sectioned and stained for several studies. Other treated females were given an intraperitoneal dose of carrier-free $S^{35}$-sodium sulfate on either day 13, 14 (10 microcuries/g body weight) or day 15 (5 microcuries/g) of gestation. Two days later, the animals were sacrificed, the young were embedded and sectioned for serial autoradiography; after 12 days of exposure, the autoradiographs were developed and examined for evidence of micropolysaccharides in normal and abnormal development of the secondary palate. Term fetus effects are shown in the following tables; control and treated embryos taken at 15, 16 or 17 days of pregnancy are compared:

TABLE 1

*Teratogenic Action of Hypervitaminosis A Observed in Term Fetuses*

| *Treatment and days of gestation treatment administered* | *Number of litters* | *Number of implantation sites* | *% Resorbed* | *% Survivors malformed* | | | *Weights (g.)* |
|---|---|---|---|---|---|---|---|
| | | | | *Cleft palate* | *Eye defects* | *Exen-cephaly* | |
| 60,000 i.u. Vitamin A 9–11 | 13 | 114 | 54 | 80 | 58 | 15 | 3·09 ± 0·44 |
| 60,000 i.u. Vitamin A 10–12 | 11 | 112 | 22 | 83 | 48 | 0 | 3·20 ± 0·42 |
| Cottonseed Oil 9–11 | 9 | 87 | 12 | 0 | 0 | 0 | 3·64 ± 0·45 |

TABLE 2

*Comparison of Control and Hypervitaminotic A Embryos on Days 15, 16 and 17 of Pregnancy*

| *Embryonic age* | *Treatment* | *Number of litters* | *% Resorbed* | *Number of living embryos* | *Average weights (g.)* | *Average crown rump length (mm.)* | *Average head length (mm.)* |
|---|---|---|---|---|---|---|---|
| 15th day | Control | 4 | 10 | 37 | 0·263 ± 0·030 | 10·8 | 6·1 |
| | Vitamin A | 11 | 54 | 63 | 0·264 ± 0·029 | 10·2 | 5·5 |
| 16th day | Control | 7 | 15 | 56 | 0·468 ± 0·046 | 13·5 | 7·3 |
| | Vitamin A | 16 | 62 | 86 | 0·467 ± 0·039 | 13·0 | 7·2 |
| 17th day | Control | 3 | 7 | 27 | 0·933 ± 0·026 | 17·4 | 9·8 |
| | Vitamin A | 6 | 56 | 37 | 0·754 ± 0·062 | 16·8 | 8·7 |

Palates in treated embryos, seen from frontal sections of the head, showed 72% abnormalities of palatine shelves in 15 day embryos; by day 16, palatine shelves were deformed in outline, but 61% had moved from the ventrical to horizontal position, the remaining treated embryos had shelves so malformed as to be ranked as intermediate in position. Most shelves of 17-day treated embryos were horizontal but widely separated from each other and deformed in outline. The following figures compare control and treated with regards to palatine shelves:

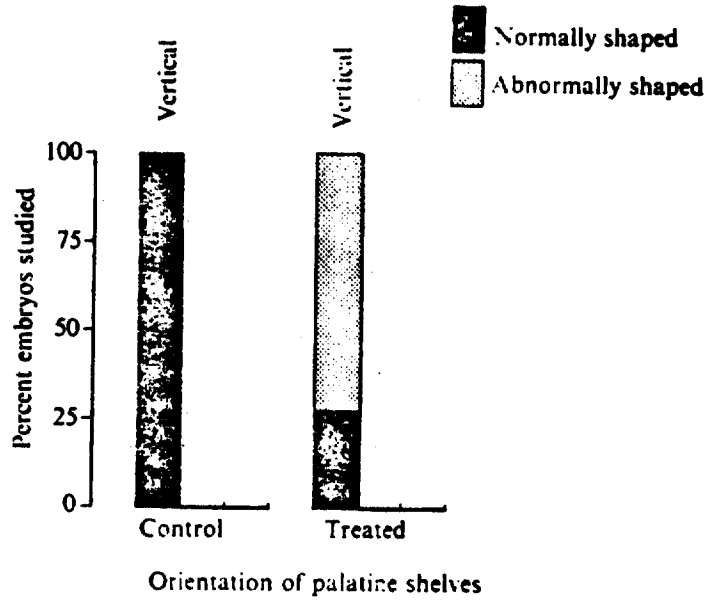


TEXT-FIG. 1. Comparison of the percentages of day 15 control and vitamin A treated embryos on the basis of shape and orientation of their palatine shelves.

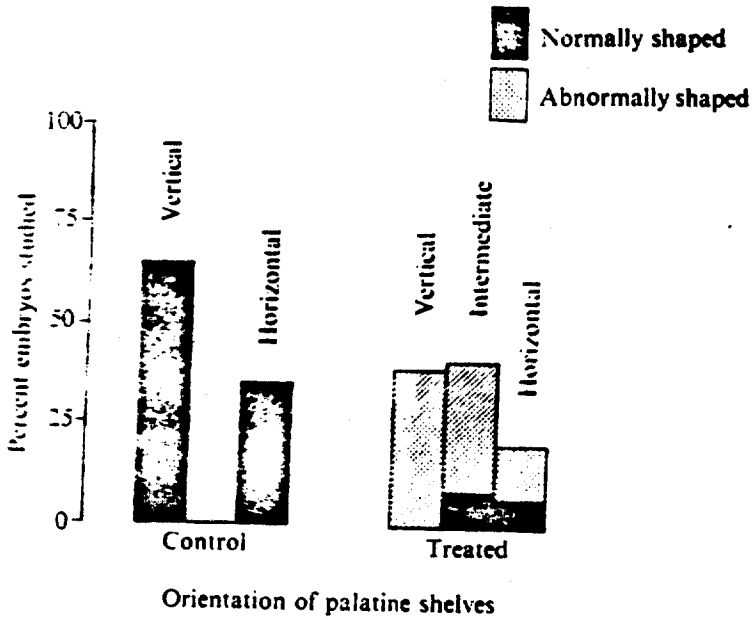


TEXT-FIG. 2. Comparison of the percentages of day 16 control and vitamin A treated embryos on the basis of shape and orientation of their palatine shelves.

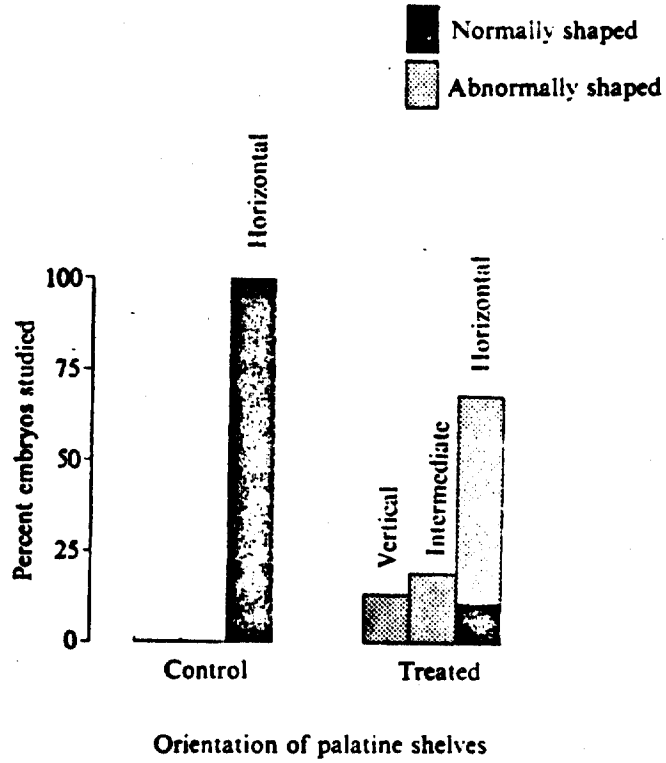


TEXT-FIG. 3. Comparison of the percentages of day 17 control and vitamin A treated embryos on the basis of shape and orientation of their palatine shelves.

In the studies of mucropolysaccharide utilization of sulfur in normal and treated embryos, it was found that more $S^{35}$ was fixed by the tissues in treated embryos than in normal controls prior to palatal closure.

Lotosh (10698) gave pregnant C3HA mice 35,000 IU vitamin A in a single dose orally on one of days 7 to 14 of pregnancy and observed that embryos at day 17 showed about 67% cleft palates, 14% upper jaw anomalies and 60% lower jaw abnormalities.

Yamaguchi (10052) used combinations of vitamin A and cortisone administered to Wistar albino rats in studies of the abnormalities induced in brain and skull, palate and general skeletal features. Seventeen pregnant females were used as controls, 15 were given 30,000 IU vitamin A per 100 g body weight orally, and 10 animals were given the vitamin dose plus 10 mg/100 g cortisone subcutaneously. The treatments were given from 10th to 13th day of pregnancy; sacrifice of animals on 21st day. Fetuses were examined for gross abnormalities and prepared for examination of skeletal abnormalities. The results are summarized in the following tables (Group A received only the vitamin; Group AC received cortisone in addition to vitamin A):

Table 2. Body weight of pregnant mother (g)

| | Control | A | AC |
|---|---|---|---|
| The first day of pregnancy | 209.4 | 203.9 | 208.2 |
| The first day of administration | 229.5 | 235.6 | 228.6 |
| The last day of administration | 239.9 | 234.5 | 204.8 |
| Autopsy day | 309.4 | 297.3 | 244.2 |
| Gained body weight | 91.6±28.6 | 93.4±25.5 | 36.0±39.5 |

Table 3. Implantation condition

| | | Control | A | AC |
|---|---|---|---|---|
| No. of implantation (Mean number per a mother) | | 10.8 | 11.9 | 11.4 |
| No. of fetal deaths | No. of resorption | 0 | 1.3 | 2.2 |
| | No. of placenta remnants | 0 | 0.7 | 0.2 |
| | No. of macerated fetuses | 0 | 0.2 | 0 |
| No. of survived fetuses | | 10.8 | 9.7 | 9.0 |
| Sex ratio | female/male | 5.5/5.3 | 4.7/5.0 | 4.4/4.6 |
| Mean weight of survivors (g) | | 4.07±0.11 | 3.79±0.35 | 3.39±0.33 |
| No. of fetuses with growth retardation | | 0.2 | 0.1 | 2.0 |
| Placenta weight (g) | | 1.20 | 3.99 | 4.04 |

Table 4. The occurrence and types of abnormalities

| | Control | A | AC |
|---|---|---|---|
| Mean number of survived fetuses per a mother | 10.8 | 9.7 | 9.0 |
| Mean number of abnormal fetuses per a mother | 0 | 8.2 | 9.0 |
| Percentage of abnormal fetuses (%) | 0 | 82.6 | 100.0 |
| Microcephalia (%) | 0 | 5.5 | 0 |
| Exencephalia (%) | 0 | 0 | 4.4 |
| Auricular abnormality (%) | 0 | 40.4 | 26.7 |
| Open eyelid (%) | 0 | 11.7 | 28.9 |
| Stomatic abnormality (%) | 0 | 1.8 | 0 |
| Megaloglossia (%) | 0 | 20.2 | 80.0 |
| Megalognathia (%) | 0 | 17.4 | 37.8 |
| Cleft palate (%) | 0 | 61.5 | 82.2 |
| Low jaw cleft (%) | 0 | 10.1 | 37.8 |
| Cleft tongue (%) | 0 | 1.8 | 0 |
| Micromelia (%) | 0 | 0.9 | 0 |

Table 5. Ossification patterns (I)

| | Control | A | AC |
|---|---|---|---|
| No. of fetuses with retardation of ossification of occipital bone (%) | 0 | 72.7±3.6 | 71.1±6.7 |
| No. of fetuses with retardation of ossification of sternebrae (%) | 16.7±1.4 | 75.5±3.4 | 70.0±7.2 |
| Mean number of ossification of metacarpal bones per a fetus | 7.89±0.24 | 6.30±0.84 | 5.89±0.13 |
| Mean number of ossification of metatarsal bones per a fetus | 8.00±0.00 | 7.87±0.25 | 7.64±0.37 |
| Mean number of ossification of coccyx per a fetus | 4.95±0.46 | 5.00±0.64 | 4.19±0.97 |

Table 6. Ossification patterns (I)

| | Number | Control | A | AC |
|---|---|---|---|---|
| No. of sternal deficiency (%) | 0 | 91.4 | 69.4 | 51.1 |
| | 1 | 7.5 | 25.2 | 42.2 |
| | 2 | 1.1 | 4.8 | 4.4 |
| | 3 | 0 | 0.6 | 2.3 |
| | 4 | 0 | 0 | 0 |
| | 5 | 0 | 0 | 0 |
| | 6 | 0 | 0 | 0 |
| Lack of the 2nd sternum (%) | | 3.4 | 17.0 | 37.8 |
| Lack of the 5th sternum (%) | | 5.2 | 19.0 | 11.1 |
| No. of incompleteness of sternal fusion (%) | 0 | 90.8 | 37.4 | 66.7 |
| | 1 | 8.1 | 27.2 | 28.9 |
| | 2 | 1.1 | 18.4 | 2.2 |
| | 3 | 0 | 12.2 | 0 |
| | 4 | 0 | 4.8 | 2.2 |
| | 5 | 0 | 0 | 0 |
| | 6 | 0 | 0 | 0 |

Table 7. Deformity or deviation of bone structure in fetus

| | | Control | A | AC |
|---|---|---|---|---|
| Formation of the 14th ribs | left (%) | 0 | 27.9 | 24.4 |
| | right (%) | 0 | 24.5 | 26.7 |
| Brachygnathia (%) | | 0 | 3.4 | 0 |
| Abnormality of brachium (%) | | 0 | 8.2 | 0 |
| Shortness of ulna (%) | | 0 | 8.8 | 13.3 |
| Shortness of radius (%) | | 0 | 7.5 | 0 |
| Shortness of femur (%) | | 0 | 4.1 | 8.9 |
| Shortness of tibia (%) | | 0 | 1.4 | 0 |
| Shortness of fibula (%) | | 0 | 8.2 | 20.0 |

Krasits'ka (10655) reported similar results in rats given both cortisone and vitamin A on days 13 and 14 of pregnancy following pretreatment with 6-methyl-thiouracil (15 mg/100 g body weight) to create a condition of hypothyroidism. Disruption of palate formation was observed, and the teratogenic effects of cortisone plus vitamin A were more pronounced in those rats with hypothyroidism than in animals with normal thyroid function.

A polygenically determined tooth anomaly in the CBA mouse was used as an experimental model in assessing the role of vitamin A and tetracycline in teratogenesis by Germain and Berry (10509). It had been suggested by several investigators that the teratological effect of vitamin A was due to interference with DNA synthesis, and if such were the case, vitamin A-treated young (mothers dosed on 3rd day before birth of young with 2500 IU vitamin A, or tetracycline, 25 mg/100 ml drinking water) should reflect a difference in a reduction in tooth size and an increased frequency of missing teeth compared with untreated controls. The animals were sacrificed at 5 weeks, and the third molar tooth from each jaw was examined and measured; the results showed no significant effect from vitamin A that would support an hypothesis that the vitamin teratogenicity was due to an effect on DNA synthesis.

Kochhar (10644) has recently (1973) demonstrated that retinoic acid treatment on chosen days of timed-pregnant DBA/2J mice produced limb defects in virtually all embryos, unaccompanied by any significant growth retardation or other external or skeletal malformations except cleft palate. Type and severity of reduction anomalies in limbs was directly related to the developmental stage of the embryonic limb bud at the time of treatment. On one of the 10th-16th days of gestation each test animal was given 80 mg/kg retinoic acid by oral intubation; sacrifice was on the 18th day. Fetuses were examined for gross anomalies and then either fixed for histological studies, or prepared for skeletal examination. The incidence of congenital defects is summarized in the following table:

**TABLE 1**

*Incidence of congenital defects in DBA/2J fetuses after retinoic acid administration on different days of gestation*

| | Number of litters | Number of implantation sites | % Sites resorbed | Number of living fetuses | % Limb defects | % Long bone defects only | | % Cleft palate |
|---|---|---|---|---|---|---|---|---|
| | | | | | | Forelimb | Hindlimb | |
| Control | 28 | 196 | 17 | 163 | 0 | 0 | 0 | 0 |
| Retinoic acid [1] | | | | | | | | |
| 10th day | 6 | 50 | 26 | 37 | 3 [2] | 0 | 0 | 68 |
| 11th day | 8 | 60 | 17 | 50 | 0 | 0 | 0 | 22 |
| 12th day | 22 | 136 | 33 | 92 | 100 | 100 | 62 | 96 |
| 13th day | 9 | 62 | 40 | 38 | 84 | 50 | 81 | 57 |
| 14th day | 3 | 37 | 15 | 32 | 61 [2] | 0 | 0 | 58 |
| 15th day | 6 | 33 | 23 | 24 | 0 | 0 | 0 | 50 |
| 16th day | 6 | 42 | 14 | 37 | 0 | 0 | 0 | 0 |

[1] 80 mg/kg orally.
[2] Only digital defects.

Limb deformities following treatment during the susceptible periods of the 12th and 13th days were classified as phocomelia and micromelia. The incidence of cleft palate had two peaks: a 10th day treatment resulting in 68% of fetuses with the deformity; and a 12th day with virtually 100% cleft palate.

Kalter (4512) reported a single instance of an unusual eye malformation in the offspring of a DBA/IJ mouse given 40,000 IU vitamin A palmitate, orally on about 8 1/3 days after fertilization. The mother was sacrificed 2 days before term and the offspring removed and prepared for serial sectioning. The left eye was microphthalmic, with thick cornea and absent anterior chamber and optic nerve. The right eye presented a type of malformation believed to be previously unreported from mammalian studies; the eye appeared as a vesicular structure composed almost entirely of thick retina, without lens, iris, cornea, anterior chamber, pupil and ciliary body. The retina showed an extensive coloboma, or fissure.

Absent and abnormal umbilical arteries have been reported in Long-Evans rat embryos of females given 30 mg retinoic acid orally by gavage on day 10 of gestation by Monie and Khemmani (10739). A total of 43 embryos from treated females were collected at days 10 to 20 of gestation and were prepared for serial sectioning and microscopic examination. Normal, untreated embryos show 3 distinct stages in umbilical artery development: first stage presents a single umbilical artery formed in the body stalk; second stage, the primary umbilical arteries which joined the first stage artery are replaced by definitive arteries; third stage, one of the latter primary arteries atrophies. The following figures show the development of umbilical and vitelline arteries from day 10 to 11 and 11½ to 12½, and some abnormalities resulting from females given retinoic acid during pregnancy:

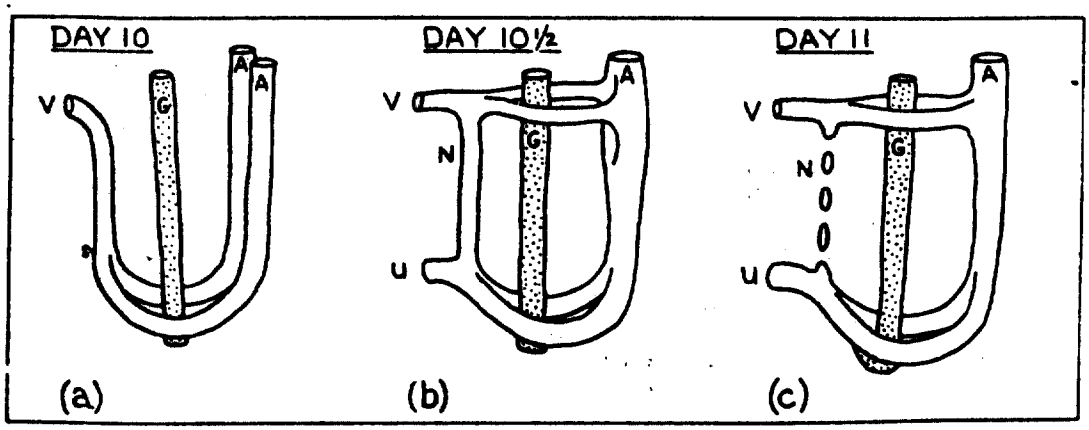


**Fig. 1** Development of the umbilical and vitelline arteries from day 10 to 11. Key: A, aorta; G, gut; N, vitelloumbilical anastomosis; U, umbilical artery; V, vitelline artery.

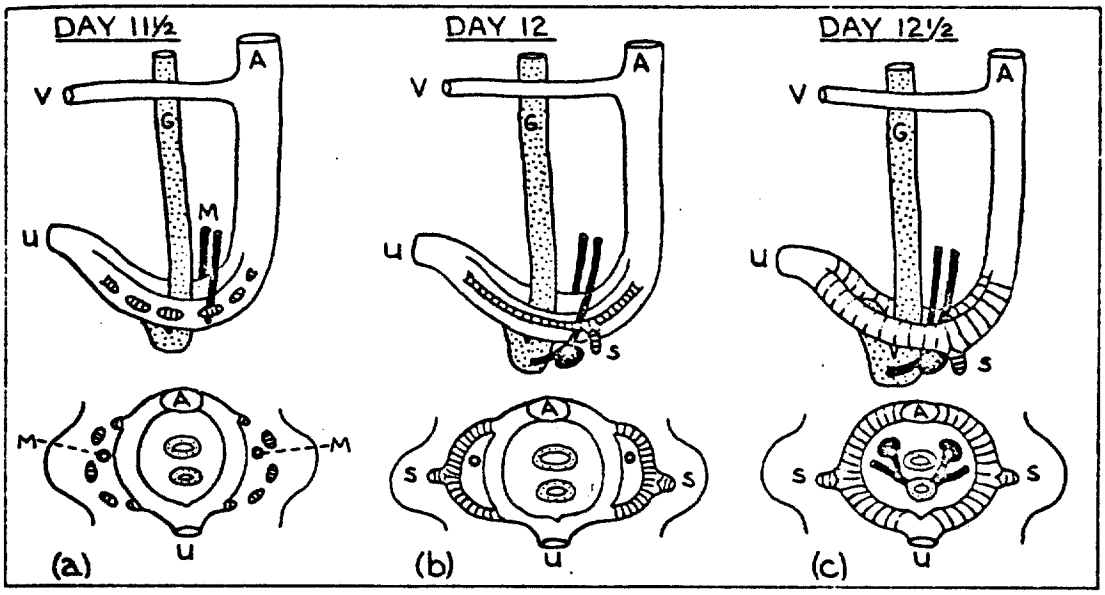


**Fig. 2** Development of the umbilical and vitelline arteries from day 11½ to 12½. Key: M, mesonephric duct; S, sciatic artery. Rest of key as in figure 1. The definitive umbilical arteries are crossbarred.

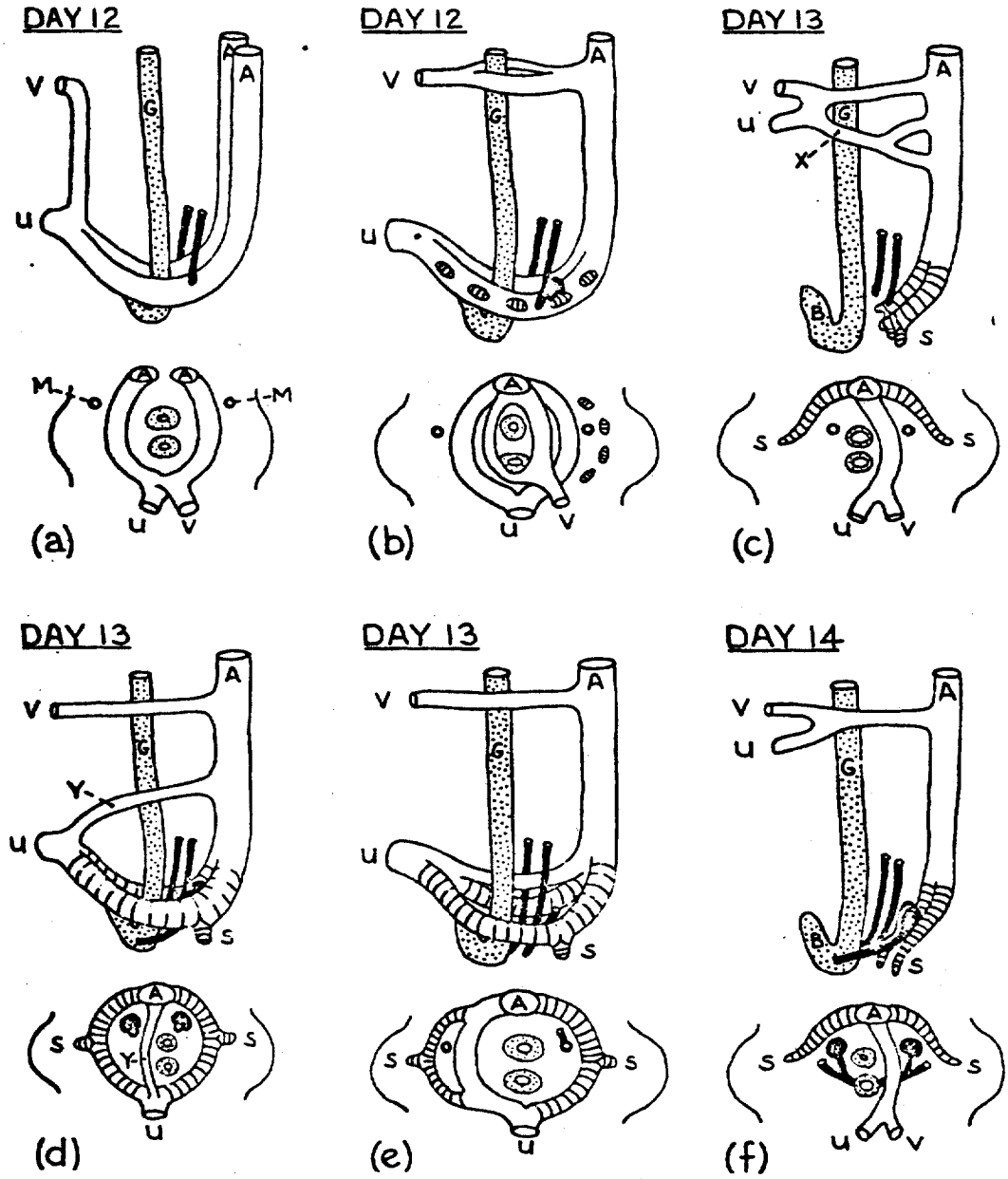


**Fig. 3** Abnormal umbilical and vitelline arteries in rat embryos from females given retinoic acid during pregnancy. Key: X and Y, persistent primary umbilical arteries. Rest of key as in figures 1 and 2.

The key factor in the genesis of the missing umbilical arteries is in the failure of the vitelloumbilical anastomosis to disappear at about day 11 (fig. 1C); the distal portions of each definitive umbilical artery do not develop, and the anastomosis becomes the sole channel for aortic blood to reach the umbilical artery in the cord after the atrophy of the primary umbilical arteries.

Giroud and Martinet (3198) reported that rabbits given doses of vitamin A for 3 consecutive days during the period of from 5 to 14 days of pregnancy responded more sensitively than had rats given comparable doses. The doses ranged from 125,000 IU to 500,000 IU, or about 41,000 IU/kg body weight to 160,000 IU/kg. At the latter dose-level, total abortions were seen in the rabbits; at half that dose, or 80,000 IU/kg, 50% abortions occurred, and some malformations such as partial exencephalia, one anuria, a case of renal agenesis, and a complex case of microstomy. In rat studies, at doses producing 50% abortions, a very large number of abnormal embryos were seen; while the rabbit is more sensitive to the toxicity of vitamin A, it appears to be more resistant to the teratogenic action of the vitamin. A later report by Giroud and Martinet (3201) included the cavy as well as rabbit and mouse. Doses of 50,000 IU vitamin A given to pregnant cavies during the 12th to 14th day of gestation produced a high percentage of total abortions and some abnormalities; one case of total fissure of the inferior maxillary with doubling (anterior) of the tongue.

Environmental and genetic interactions give rise to variable reactions to hypervitaminosis A, and species differences, as well as subspecific or strain differences, have also been observed in the teratogenic responses to specific teratogens. Nolen (6798) described strain differences among Sprague-Dawley, Charles River and Wistar female rats given daily oral doses of vitamin A on days 6-15 of pregnancy; doses were 0, 50,000 or 75,000 IU. On day 21 of pregnancy the females were sacrificed and laparotomized; fetuses were examined for gross abnormalities, and a third were prepared for skeletal studies. Data regarding reproductive performances are shown in the table below:

Table 1. *Reproductive performance of three strains of rat given daily oral doses of 0–75,000 IU vitamin A on days 5–16 of pregnancy*

| Reproductive findings | Strain ... | Sprague–Dawley | | | Charles River | | | Wistar | | |
|---|---|---|---|---|---|---|---|---|---|---|
| | Vitamin intake (IU/day) ... | 0 | 50,000 | 75,000 | 0 | 50,000 | 75,000 | 0 | 50,000 | 75,000 |
| No. pregnant | | 11 | 11 | 9 | 10 | 10 | 9 | 10 | 10 | 9 |
| No. with total resorption | | 0 | 0 | 3 | 0 | 0 | 6 | 0 | 0 | 1 |
| Mean no. of corpora lutea | | 12·8±1·7 | 13·9±1·5 | 13·0±3·1 | 12·7±1·7 | 13·4±3·1 | 15·2±3·4 | 12·4±2·5 | 12·6±2·1 | 13·0±2·1 |
| Mean no. of resorptions | | 0·6±1·3 | 0·0 | 6·8±5·5* | 1·8±3·2 | 2·7±5·1 | 7·9±6·6* | 0·5±0·7 | 0·3±0·5 | 4·1±5·8 |
| No. of dead foetuses | | 0 | 0 | 9 | 1 | 0 | 0 | 0 | 2 | 0 |
| Mean no. of live foetuses | | 11·2±2·1 | 11·4±2·7 | 6·6±3·9† | 10·1±4·1 | 12·0±3·2 | 13·0±2·2 | 10·9±2·6 | 9·1±3·8 | 11·8±1·7 |

*Minimum significant difference at $P \leq 0{\cdot}05 = 5{\cdot}7$.
†Minimum significant difference at $P \leq 0{\cdot}05 = 5{\cdot}0$.

The types and incidence of fetal abnormalities in the three strains of rats are shown in the following table:



**Table 2.** *Types and incidence of foetal abnormalities in three strains of rat following administration of daily oral doses of 0–75,000 IU vitamin A on days 6–15 of pregnancy*

| | | Percentage incidence of malformations in | | | | | | | | |
|---|---|---|---|---|---|---|---|---|---|---|
| | Strain ... | Sprague–Dawley | | | Charles River | | | Wistar | | |
| | Vitamin A intake (IU/day)... | 0 | 50,000 | 75,000 | 0 | 50,000 | 75,000 | 0 | 50,000 | 75,000 |
| Type of malformation | No. of foetuses examined ... | 86 | 90 | 22 | 67 | 78 | 36 | 76 | 57 | 65 |
| Cleft palate | | 0 | 12·0 | 52·0 | 0 | 2·6 | 32·2 | 0 | 0 | 10·8 |
| Dermal aplasia | | 0·8 | 0 | 0 | 0 | 0 | 0 | 0 | 0 | 0 |
| Exencephaly | | 0 | 1·1 | 40·9 | 0 | 0 | 0 | 0 | 1·7 | 4·5 |
| Anophthalmia | | 0 | 1·1 | 52·2 | 0 | 0 | 0 | 0 | 0 | 1·5 |
| Microphthalmia | | 0 | 0 | 9·1 | 0 | 0 | 0 | 0 | 0 | 0 |
| Encephalocele | | 0 | 1·1 | 4·5 | 0 | 0 | 0 | 0 | 0 | 1·5 |
| Meningocele | | 0 | 0 | 13·6 | 0 | 0 | 0 | 0 | 1·7 | 4·5 |
| Haematoma | | 0 | 1·1 | 0 | 0 | 1·3 | 0 | 0 | 0 | 0 |
| Intraventricular septal defect | | 0 | 0 | 4·5 | 0 | 0 | 0 | 0 | 0 | 0 |
| Ventricular hyperplasia | | 0 | 0 | 0 | 0 | 0 | 2·8 | 0 | 0 | 0 |
| Hydronephrosis | | 0 | 0 | 13·6 | 0 | 0 | 2·8 | 0 | 1·7 | 0 |
| Hydro-ureter | | 0 | 0 | 4·5 | 0 | 0 | 0 | 0 | 0 | 0 |
| Facial dysgenesis | | 0 | 0 | 11·3 | 1·1 | 1·3 | 0 | 0 | 0 | 0 |
| Micrognathia | | 0 | 0 | 3·5 | 0 | 0 | 0 | 0 | 0 | 0 |
| Gastroschisis | | 0 | 0 | 0 | 0 | 0 | 2·8 | 0 | 0 | 0 |
| | Percentage of abnormal foetuses†... | 0·8 | 10·2 | 100* | 0·9 | 8·5 | 34·2* | 0 | 4·1 | 22·2 |

*Minimum significant difference at $P \leq 0{\cdot}05 = 23{\cdot}2$.

†Percentages are based upon the numbers of foetuses examined for a given type of abnormality. Thus, grossly evident abnormalities are based on total number examined, while those seen only by sectioning are based on the number sectioned. In some cases, a single rat had multiple abnormalities.

The data indicated that both the Sprague–Dawley and Charles River rats were more sensitive to hypervitaminosis A than the Wistar strain at both levels of dosage. Strain differences were seen in both the relative incidence and in the pattern of malformations. Skeletal deformities of consequence were not observed, but variations in the number of ribs and sternebrae were seen.

## Dermatology

Vitamin A has been demonstrated to be essential for the normal functioning of all epithelial tissues; its deficiency results in keratinization of mucous epithelia and hyperkeratotic changes in the skin surrounding hair follicles. Hypervitaminosis A by parenteral

administration results in erythema, exfoliation and in extreme cases - a generalized exfoliative erythroderma. Jarrett and Spearman (4305) have discussed the action of vitamin A on the skin and the treatment of disorders of the skin. Those effects well established include: the dilatation of dermal blood vessels with a resultant erythema; an increased epidermal mitosis and thickening of the epidermis. Moderate concentrations produce a deepening of the granular layer, and even in some cases induce a granular layer where none previously existed.

Psoriasis and ichthyosis have been treated with vitamin A; only chronic psoriasis has been successfully treated; acute psoriasis is worsened by vitamin A. Severe cases of ichthyosis (x-linked) are treated with an ointment containing 25,000 IU/g. Studer and Frey (8793) had observed 20 years earlier that the vitamin was useful in treating pityriosis rubra pilaris (epidermal keratinization with exfoliation), Darier's disease (keratosis follicularis) and ichthyosis. Daily doses of 100,000 to 400,000 IU were employed during several weeks. (A statement prepared by the Nutrition Committee of the Canadian Paediatric Society (Anon (314)) includes the following recommendation: "Massive doses of vitamin A should no longer be used in the treatment of skin disorders. This form of therapy is of doubtful benefit and the hazards of vitamin A toxicity are great".)

The effect of vitamin A on the normal skin was studied by using rats given oral daily doses of 40,000 IU vitamin A acetate. Reddening and swelling was observed along the edges of the mouth on the 4th day, spreading over jaws, neck, chest and axillas within a few days, reaching a maximum effect by 9 days. The reddening was accompanied by loss of hair producing bald spots. Some exudation and crusting on neck, chest and axillas were seen. By the 12th day, the inflammation subsided; later, the hair began to grow again and after 3 weeks the animals were normal. Microscopic differences between the skin of normal and treated animals were described. Jewell et al. (4347) injected rabbits intracutaneously with vitamin A palmitate, about 1500 IU. The animals were sacrificed at 1, 2, 4, 7, 14, 21 and 28 days after injection. Histological studies were performed on skin strips removed at the site of injection. Thickness of epithelium and mitotic figure counts were measured and recorded. Examination showed an increased thickness of epidermis due to both an increased number and size of germinative and granular cells. The corneum was thinner and denser than untreated control specimens.

Pinkus and Hunter (7238) studied ten healthy human volunteers given daily doses of vitamin A by buccal tab for 30 days to determine the influence of the vitamin on normal skin and on skin with the keratin layer stripped-off. Normal skin stripped-off horny cell counts were made before and after taking the vitamin for 30 days. In each case, the number of cells that could be stripped was decreased; mitosis was decreased in 7 of the 10 subjects and was increased in only 1. The total number of nucleated cells was increased in treated subjects, and the results of the experiments indicated that vitamin A in large doses retards the keratinocytic maturation. Studies reported by Sherman (8357) with Wistar

albino rats made either vitamin A-deficient or given diets supplemented by 30 micrograms of vitamin A acetate showed reduced corneal epithelial mitotic indices; in vitro studies showed similar results in corneal, epidermal and tracheal samples. Lower doses of the vitamin given either orally or topically increased the epithelial mitotic index both in vivo and in vitro; at toxic levels, the vitamin significantly depressed the count. It was concluded that vitamin A is a factor in the regulation of mitotic activity of epithelial cells. Bern and Lawrence (772) reviewed in 1962 the "current body of experimental literature concerning the effects of excess vitamin A on keratinization"; the studies range in time from 1922 to 1960. The authors summary is quoted directly:

> "It is concluded that the effect of excess vitamin A on keratinizing epithelia varies considerably with the dose level applied. At low dose levels, hyperplasia occurs. Intermediate dose levels result in a parakeratosis. High dose levels result in a mucous metaplasia, apparently reversible in time by removing the vitamin A stimulus. Massive dose levels produce death of the epithelium. There is evidence that these responses are generalized and may apply to all keratinizing epithelia."

Bern et al. (771) reported in 1955 the results of a number of experiments using Long-Evans rats given various treatments: topical application (daily 0.3 ml sesame oil containing 100 IU vitamin A alcohol) by pad against shaved dorsal area; topical, sesame oil alone; subcutaneous injection sesame oil; and subcutaneous vitamin A in sesame oil. Treatments lasted 10, 20, 30 or 60 days and animals were sacrificed. Tissue samples from treated areas of the skin were examined microscopically (by polarizing and by electron microscopes) and biochemically for polysaccharides, nucleic acids, sulfhydryl and disulfide groups. Epidermal thicknesses were measured. Nipple studies of male guinea pigs were performed to compare the effects of topically given estrogen and vitamin A. The following conclusions from test results were listed: topical vitamin A produced acanthosis to which no "adaptation" to the effects was noted; the tonofibril system was unaffected, but "intercellular" bridges to desmosomes were reduced, accompanying hyperplasia induced by the vitamin; only minor cytochemical effects were seen, and no definite evidence of interference with the keratinization process was obtained; and no interference to nipple region epidermal response to estrogen was occasioned by the presence of vitamin A.

Comparative studies of hypervitaminosis A and avitaminosis A (A-deficient diet) in rats, and their influences on epithelial tissues were reported by Vedrova and Sapelkina (9411) in 1968. Two groups of rats of a dozen each were given daily doses of 20 and 40 micrograms of vitamin A, a third group of 16 animals received 80 micrograms daily, and a fourth group was placed on a diet deficient in the vitamin. After several months of the treatments, the rats were sacrificed and tissue samples taken from skin, organ parenchymal tissues, trachea and urinary bladder for histological examination. The two lower doses of 20 and 40

micrograms produced no significant changes from normal controls. The animals receiving 80 micrograms of vitamin A showed a thickening of the epidermis, a proliferation of the basal epidermal layer and an increase in the granular layer. The horny layer was thickened and scaled readily. The hair follicles were abnormal, frequently empty or choked at the opening by accumulated granular-layer cells. Disintegrating fat gland cells were frequently overfilled with sebaceous secretion. Some fatty dystrophy in the liver cells was seen, but other organ changes were not observed. Numerous abnormalities were found in the tissues of the animals on the vitamin A-deficient diet, particularly in the epidermis.

Reproduction

An early paper (1945) by Moore and Wang (6329) includes a study of the effects of hypervitaminosis A on gestation in the rat. Vitamin A acetate was given in doses of 45,000 IU in the diet of pregnant rats; in other experiments, doses of 30,000-40,000 IU as the halibut-liver oil were given. The results were described only in terms of uterine hemorrhage and resorption and are summarized in the following table:

| Vitamin A given | Total no. of rats in group | No. of cases of: Uterine haemorrhage | Failure of implantation or resorption | Litters, dead or alive, without fatal haemorrhage |
|---|---|---|---|---|
| (a) Within 10 days after coitus | 13 | 6 | 6 | 1 |
| (b) More than 10 days after coitus | 12 | 0 | 0 | 12 |

Lower dosages of 1000 IU daily in the diet, from the time of fertilization, given to rats resulted in 1 of 6 treated females showing uterine hemorrhage, 1 resorption and 4 litters (dead or alive, without fatal hemorrhage). Other treatments indicated that the abnormality of uterine haemorrhage resulted only when hypervitaminosis A was induced within 10 days after fertilization.

Berdjis (751) reported results from three experiments with rats given 100-300 IU vitamin A alcohol/g body weight either before, during or after pregnancy. Five animals were used in each experiment and five served as controls, untreated. Offspring numbered 123, and were studied for four months. The results are shown in the following table:

TABLE 1.—*Comparison of the Number of Animals and Litters in Each Group and Mortality During the Experiments*

| | Number | Number Litter | Average No. Each Litter | Total No. Offspring at Birth | Offspring at End of Experiment No. | Mortality | |
|---|---|---|---|---|---|---|---|
| | | | | | | No. | % |
| Hypervitaminosis A * | | | | | | | |
| Group 1 | 5 | 5 | 6 | 30 | 24 | 6 | 20 |
| Group 2 | 5 | 5 | 6½ | 33 | 28 | 5 | 15 |
| Group 3 | 5 | 5 | 5 | 25 | 10 | 15 | 60 |
| Controls | 5 | 5 | 7 | 35 | 30 | 5 | 14 |

* Group 1 indicates animal fed with excessive doses of vitamin A before pregnancy; Group 2, after pregnancy; Group 3, during pregnancy.

The vitamin A treatment in the first 2 experiments produced no significant differences: premature and reduced litters resulted from the 3rd experiment, the offspring showing more or less severe congenital malformations. Survivors showed retarded growth and general debility and at 4 months were scarcely half the size of normal rats.

Biswas and Deb (895) administered 30,000 IU vitamin A by intramuscular injection daily for six weeks to 24 adult male rats to test the effects on the testes. Half of the males were sacrificed upon withdrawal of the vitamin, the remainder at 15 days after withdrawal. Testes were dissected and prepared for histological and histochemical studies; the latter included tests for neutral lipid, plasmal, cholesterol, alkaline phosphatase, acid phosphatase, succinic dehydrogenase and esterase. Histologically, the testes showed decreased spermatogenic activity; seminiferous tubules were reduced in diameter, with basement membrane thickened. Sertoli cells lined the tubules and sperm were absent in the treated testes. Histochemically, lipid, plasmal and cholesterol levels were raised interstitially and in Sertoli cells. Esterase activity was decreased, as were phosphatases and dehydrogenase. Accessory sex organs were atrophied. Spermatogenesis was not renewed in the animals after 15 days following withdrawal of the vitamin. A few years later, Biswas and Mukherji (896) repeated the experiments with 20 male adult albino rats, given 30,000 IU vitamin A daily, for several weeks longer (8 weeks). After sacrifice, both testes and anterior pituitaries were removed and prepared for sectioning and study, histologically and histochemically (for FSH and LH secreting cells of the pituitary). Diminished spermatogenesis was observed, as before, with marked degeneration of germinal epithelium and Leydig cell atrophy. Gonadotropic secretion was inhibited as evidenced by reduced numbers of granulated basophil cells responsible for secretion of FSH and LH. The authors noted that increased ACTH or reduced TSH caused by hypervitaminosis A may be responsible for the decreased gonadotropins.

Mavligit and Gitlin (5925) reported that doses of vitamin A, 37,500 IU every 3 days, given orally by intubation to virgin female albino rats resulted in premature opening of the vaginal membrane. The opposite effect had been anticipated and the authors suggested that the results

may be due to an increased permeability of certain membranes by the release of proteolytic lyosomal enzymes during the vitamin treatment.

The effect of vitamin A on impregnation and implantation of the ovum in female rats was reported by Laschet and Weise (5184). The rats, 442, ranging in weight from 145 to 180 g were mated and administered the vitamin by gastric tube; 11 days after mating, the females were sacrificed and fertility rates determined. Sixty rats served as controls: 50, or 83% became pregnant. The treated rats, numbers used, dosages and numbers pregnant are shown below:

TABLE I

*Fertility After Vitamin A Therapy*

| *Number of Animals* | *Vitamin A Dosage* | *Number of Pregnant Animals* | % | *Number of Fetuses per Animal* |
|---|---|---|---|---|
| 60 | 0.2 ml. oil | 50 | 83 | 9.2 |
| 60 | 1 x 30 000 | 43 | 72 | 8.2 |
| 30 | 2 x 30 000 | 21 | 70 | 10.1 |
| 30 | 3 x 30 000 | 20 | 67 | 10.3 |
| 30 | 4 x 30 000 | 18 | 60 | 9.6 |
| 30 | 5 x 30 000 | 17 | 57 | 9.4 |
| 75 | 1 x 60 000 | 52 | 69 | 9.1 |
| 31 | 2 x 60 000 | 22 | 71 | 9.4 |
| 32 | 3 x 60 000 | 20 | 63 | 9.4 |
| 33 | 4 x 60 000 | 15 | 46 | 8.7 |
| 31 | 2 x 120 000 (divided in two doses) | 22 | 71 | 8.7 |

The first treated group of 60 animals (72% pregnant), received the single dose during pre-estrus. The second group of 30 animals (70% pregnant) received the pre-estrus dose plus another dose the following day; each succeeding group received doses in the same manner, the first dose pre-estrus, following doses on following days. Thus, the 30,000 IU given pre-estrus reduced fertility, and subsequent day's doses reduced the fertility rate even more (from 72% to 57% following 5 daily doses). It was concluded that fecundation of the ovum was not disturbed, but that the embedding of the fertilized ovum in the uterus was disturbed by the vitamin A doses, presumably due to inhibition of the epithelial differentiation.

## Osteology - Chondrology

It is known that when animals are fed on a diet containing excess vitamin A their bones and cartilage undergo severe resorption often accompanied by spontaneous fractures. These effects have been absorbed in intact chicks, ducks, rats, guinea pigs, calves and man. In

addition bone lesions have been studied in cultures of various explanted tissues. The teratogenicity of vitamin A is often evidenced in skeletal tissue. The gross pathology of skeletal changes induced by excessive vitamin A is discussed under the headings Short-term Studies and Teratogenicity. The current discussion shall deal with bone lesions on a cellular and subcellular level.

Following examination of the limb bones of many hypervitaminotic young rats and guinea pigs, Wolbach reported the following observations and conclusions.

For the cartilage:

1. Rapid maturation of the cartilage cells, so that vesicular chondroblasts extend far towards the epiphyseal line;

2. Relative retardation of matrix-formation, causing compression of the maturing cells on the diaphysial side of the cartilage plate;

3. Cessation of cell division in the proliferative cartilage;

4. Very deep and rapid penetration of the cartilage by capillaries;

5. Concurrently rapid replacement of the cartilage by bone, re-resulting in premature closure of the epiphyses and arrest of linear growth.

In the bone he observed:

1. Acceleration of remodelling sequences, involving absorption by increased osteoclasis and appositional bone formation; absorption and deposition take place at the same sites as in normal bone development;

2. Failure of the matrix of the newly formed bone to mature and to calcify completely;

3. Fractures caused by excessive absorption of the old cortical bone and lack of firmness in the new bone.

A quantitative relationship between the rate at which these changes appear in the long bones and the dose of vitamin A received by the animal was noted. In summation, Wolbach suggested that excessive vitamin A evokes an acceleration of normal growth sequences in long bones (9954).

Tissue culture studies of the effect of excess vitamin A on limb-bone rudiments of chick embryos and fetal mice were conducted by Fell and

Mellanby. Regarding the chick rudiments exposed to excess retinol, the following observations were made: linear growth was arrested, but the cartilage differentiated at the normal rate and ossification was only slightly reduced; the cartilage matrix shrank, softened and lost its basophilia and metachromasia while its affinity for van Gieson's stain was much increased; there was no excavation of cartilage or absorption of bone; the surrounding soft tissue grew profusely. When the mouse explants were subjected to excess retinol or retinyl acetate the cartilage matrix rapidly dwindled, lost its metachromasia and finally diappeared, leaving the chondroblasts naked. The bone was quickly absorbed, though in most experiments few osteoclasts were present; it was not replaced by new osteoid tissue. The differences observed between the chick and mouse explants were attributed to the differences in the normal developmental patterns of the animals. The severity of the induced changes was found to depend upon the concentration of the vitamin in the culture medium and the age of the fetus from which the tissue was explanted. Experiments in which cartilage was killed by mechanical damage or by heating, and consequently failed to respond to vitamin A treatment, demonstrated that the effect of vitamin A is not directly upon the intercellular material, but depends upon the activities of living cells. In conjunction with this finding, it was suggested that the age dependency resulted from the fact that the younger the bone the greater is the proportion of cellular to intercellular material; also, the hardness and density of the intercellular material is less in younger bone. In an attempt to determine why vitamin A has a more drastic effect on explanted bone rudiments than on the bones of intact hypervitaminotic animals, explanted fetal mouse bones were incubated in a hypervitaminotic culture medium developed by using plasma from a hypervitaminotic fowl. These explants showed effects that were qualitatively similar but far less severe than those produced by adding the same quantity of vitamin A acetate or alcohol to normal plasma. From this it was concluded that vitamin A has a lower biological activity and is in a different state in the blood plasma of a hypervitaminotic animal than when it is added directly to normal plasma (2675).

Autoradiographic studies by Fell, et al. in which chick limb-bone explants were treated with labeled inorganic sulfate showed that the loss of metachromasia is preceded by an inability of the cartilage to fix sulfate, and is accompanied by a loss of the sulfate already present. On the basis of these results, it was suggested that under the influence of excessive vitamin A, the cartilage cells may produce an enzyme which results in the formation of a soluble sulfated mucopolysaccharide, instead of the normal chondroitin sulfate, and in the dissolution of existing matrix (2681).

On the basis of his experiments on young rabbits given large i.p. doses of vitamin A two weeks after treatment with $^{35}SO_4$, McElligott concluded that the observed depletion of chondroitin sulfate from articular and epiphyseal cartilage of the hypervitaminotic rabbits resulted from an inhibition of chondrocyte function (chondroitin sulfate synthesis), matrix breakdown being a secondary effect (5997).

Decreased mucopolysaccharide and collagen content of bone was reported by Clark and Smith to be manifested by rats given 10,000 IU vitamin A/kg body weight/day for 24 days. Increased bone mineral turnover was also observed in these rats (1707).

Epiphyseal plates from hypervitaminotic kittens were examined in a study by Clark. Plates from the test animals were reduced in depth, contained fewer chondrocytes arranged in shorter, irregular columns and the hypertrophic cells were smaller. The cartilaginous matrix exhibited a diffuse loss of basophilia and of metachromasia, and coarse fibrillation. In opposition to the interpretations of Wolbach (9954), Clark suggested that excess vitamin A retards the growth of epiphyseal plates by affecting the rate of formation of new chondrocytes and, either directly or indirectly, the maximum size reached by the chondrocytes in the hypertrophic cell zone. With regard to differences in the severity of effect seen in different plates of the same animal, Clark suggested that vitamin A primarily affects epiphyseal plates in proportion to their normal rates of growth (10320).

Using intact rabbits, Thomas et al. compared the effects of papain and vitamin A on cartilage. It had previously been shown that an i.v. injection of papain in young rabbits resulted in prompt depletion of the basophilic component of matrix in all cartilaginous tissues. Retinyl palmitate administered to young rabbits by intraperitoneal injection or intragastric intubation was demonstrated in this study to result in depletion of cartilage matrix, especially in articular and epiphyseal cartilage. The depletion of the cartilage matrix was accompanied by concurrent vascularization and ossification of the zone of proliferating cartilage, resulting in a reduction of the epiphyseal plate to a thin zone of non-basilic cartilage abutting directly on metaphyseal bony trabeculae. The cartilage cells remained intact but were reduced in size. In addition to histological examination evidence indicating the loss of chondroitin sulfate from the cartilage included the diminution or disappearance of basophilic, metachromatic, and Alcian blue-positive material from cartilage; the loss of previously incorporated sulfur-35 as shown by autoradiography; and the appearance in the blood of cobalt-precipitable material presumed to be chondroitin sulfate. In addition, the finding of increased amounts of non-dialyzable sulfur-35 activity in the serum, the relative increase in the amount of sulfur-35 in the urine, the reduction in the sulfur-35 activity, and the increased nitrogen/hexosamine ratio of extracted crude chondromucoprotein support this interpretation. On the basis of the remarkable similarity of the changes produced by papain and vitamin A, it was suggested that the changes in cartilage produced by administration of vitamin A to rabbits may be the result of activation of a proteolytic enzyme or enzymes, with properties similar to those of papain (9077).

In a comparison of the effects of papain and vitamin A on explanted limb bone rudiments from chick embryos and fetal mice, Fell and Thomas (2684) obtained results and reached conclusions in accord with those of Thomas et al. (9077).

Dingle et al. grew the humeri, femora and tibiae of 7-day chick embryos in cultures supplemented with 10 IU retinol/ml. After 6 days' cultivation the wet and dry weights and amino sugar content of the cartilaginous limb-bone rudiments were half those of controls on normal medium. The DNA content of the treated cultures, however, was 80% of the controls, suggesting that the severe inhibition of growth in length and weight was mainly due to a substantial reduction in the amount of intercellular material rather than in the number of cells. It was noted that the addition of vitamin A depressed the rate of oxygen uptake but increased that of lactic acid formation. There was twice as much acid-soluble nitrogen in the used culture medium of the vitamin A-treated explants as in that of the control, indicating a greater proteolytic activity in the presence of the vitamin (2196).

In agreement with the work of Dingle et al. (2196), studies conducted by Fell and Dingle (2690) on chick limb-bone rudiments and by Rodahl (7739) on intact rats indicated that under the influence of excess vitamin A, chondrocytes produce an enzyme which acts on the matrix by breaking down the protein moiety of the protein-mucopolysaccharide complex, with the subsequent liberation of sulphated mucopolysaccharide.

Further evidence that the breakdown of cartilage in hypervitaminosis A is due to proteolytic activity was provided by Fell through a tissue-culture study in which epsilon-aminocaproic acid, which is known to inhibit the acid protease of cartilage, was shown to largely prevent the action of vitamin A on the cartilage matrix (2692).

Prompted by the idea that excess vitamin A exerts its action through enhanced proteolytic activity, several researchers studied the effects of vitamin A on lysosomers. In vitro treatment of isolated lysosomes from rat liver and embryonic chick cartilage resulted in the rapid release of hydrolytic enzymes (2197, 2690). This effect was dose-dependent (2197) and had a high degree of molecular specificity (2688).

Change in lysosomal stability in response to excess vitamin A is not confined to in vitro systems, but also takes place in the intact animal, as demonstrated by Dingle et al. (10433) in rats, by Weissmann and Thomas (9707) in rabbits, and by Weissmann et al. (9706) in guinea pigs.

Further support of the suggestion that excess vitamin A may exert its action on cartilage through an effect on lysosomes in lent by the studies of Fell and Thomas (2686) and Weissman and Thomas (9707), which show that the addition of hydrocortisone, which has been shown to stabilize lysosomal and other membrane systems, greatly retards the effects of vitamin A on bone and cartilage in culture. The protective action of hydrocortisone was also demonstrated in vivo by Thomas et al. (9079) in rabbits.

### Hydrocephaly

A well-known effect of vitamin A intoxication is the production of a hydrocephalic condition. Excessive vitamin A intake has been observed

to result in increased cerebrospinal fluid (CSF) pressure, which is often characterized, especially in infants, by swelling in the area of the fontanels. This effect has been observed not only in man, but has also been produced experimentally in dogs. Complete reversal of the hydrocephalic condition has been shown upon removal of the excess vitamin from the diet (5785, 6339, 10233).

On the basis of studies using weanling rats, Becker and Sutton suggested that the increased CSF pressure resulted from an alteration in the cellular integrity of the choroid plexus tissue, regarded to be the main site of CSF formation, thus causing an overproduction of CSF (689, 8854).

In contrast to the above effects of hypervitaminosis A on CSF pressure, other workers have reported that rats (10707), dogs (10586), pigs (10586) and calves (1374, 2924, 4163) chronically fed excessive vitamin A were observed to manifest reductions in CSF pressure.

That this effect is reversible was demonstrated in an experiment by Hall et al. in which the CSF pressure of calves previously fed a chronic intake of 8,800 mcg vitamin A/day returned to normal after 12 weeks of withdrawal (10560).

Several explanations have been postulated for the observed decrease in CSF pressure. Improper frontal, lacrimal, and nasal bone growth, causing a thinning of the skull bones and resulting in a greater CSF space was suggested by Calhoun et al. (1374), and Grey et al. (3456), to play a part in the reduction of CSF pressure. Hurt et al. (4163) have suggested that the primary cause of the decreased CSF pressure is an alteration in the secretory activity of the choroid plexuses, which results in a decreased rate of CSF formation. However, more recent studies, using rats (10707) and calves (2924), have shown that the decrease in CSF pressure is primarily attributable to an increase in the permeability of the membranes associated with the absorption of CSF, resulting in greater bulk absorption. The suggestion that excess vitamin A may cause blockage between the sites of formation and sites of absorption was shown by Grey et al. (3455, 3456) to be invalid.

## Biochemical Aspects

### I. Breakdown

No information available

### II. Absorption - Distribution

The absorption, distribution, metabolism and excretion of vitamin A have been discussed in detail in several excellent and current reviews (6339, 10806, 10878, 10934). Rather than unnecessarily repeat this work, the discussion of these aspects of this monograph will be based largely on these reviews.

In his review, Pitt included a scheme which summarizes the metabolic transformations of vitamin A in the body (10806). This scheme, Scheme 1, provides an excellent outline for this discussion.

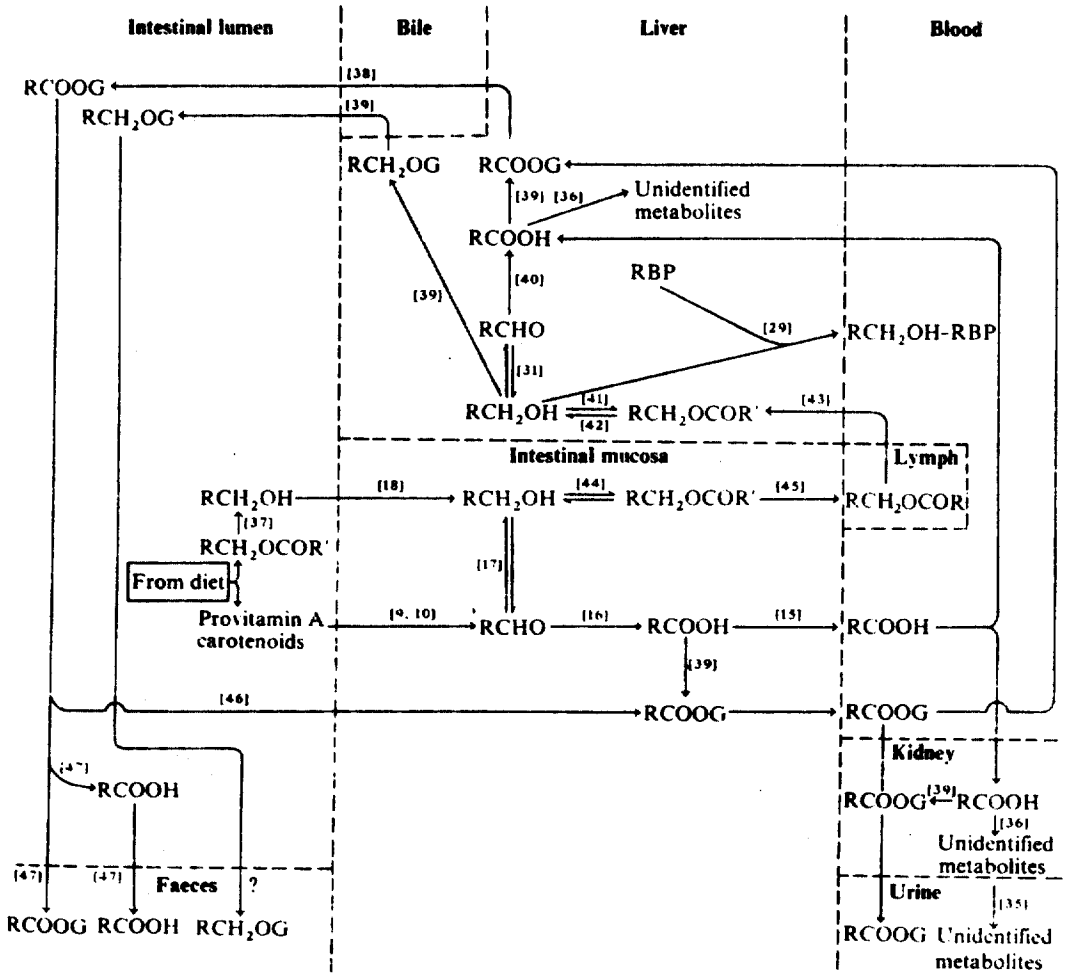


Scheme 1. Some metabolic transformations of vitamin A (after Olson [32]). Abbreviations: $RCH_2OH$ = retinol. $RCH_2OCOR'$ = retinyl esters. $RCH_2OG$ = retinyl β-glucuronide. RCHO = retinaldehyde. RCOOH = retinoic acid. RCOOG = retinoyl β-glucuronide. RBP = retinol-binding protein

Upon ingestion, vitamin A is absorbed primarily through the duodenum and jejunum. The absorption of retinol and the retinyl esters by the intestine is believed to proceed as follows: partial hydrolysis of dietary retinyl esters to retinol by a pancreatic hydrolase while still present in the lipid phase; uptake of both retinol and retinyl esters from the micellar phase by the brush border of the mucosal cells; hydrolysis of the retinyl esters by a hydrolase located on the outer surface of the brush border; transfer of the retinol into the mucosal cells; re-esterification, preferentially with palmitic acid, of the retinol inside the cell. The retinyl esters are then transported via the lymphatic system and the thoracic duct to the blood stream (10806, 10878, 10934).

While concurring that the lymphatic route, as just described, is the primary route of absorption of retinol, Ganguly suggested that significant proportions of fed retinol are also absorbed through the portal route (3047).

The intestinal absorption of retinol is considered to be an active process in the rat and the human, this concept being supported by the findings that retinol absorption is greatly enhanced by ATP, whereas metabolic inhibitors and lack of oxygen prevent its accumulation and transport across the cell wall (10806, 10878, 10934).

The rate of absorption of retinol has been shown to be proportional to the concentration of the administered dose. Investigations have also shown that the extent of retinol absorption can be increased by administration of the vitamin in an emulsified form or by simultaneous administration of lecithin or vitamin E (6339).

In studying absorption, Goodman et al. fed a 58-year-old woman with a cannulated thoracic duct 0.68 mg retinol-15-$^{14}$C. Analysis of lymph collected in the 20 hours following feeding accounted for 21.5% of the administered dose. Of the radioactivity absorbed into the lymph, 78% was absorbed between 2 and 8 hours (3296).

Reports quoted by Moore indicate that the absorption of retinol and the retinyl esters, as indicated by serum levels, reaches a maximum rate about 5 hours after administration (6339).

The time course of absorption of retinol by the rat is shown in Table 1, which was compiled by Mahadevan and Ganguly. The changes in ester composition during absorption, showing the prevalence of retinyl palmitate, are shown in the table (5655).

Table 1 *Vitamin A ester composition of the contents, mucosae and muscles of the small intestine, and of the blood and liver of rats, at different time intervals after feeding with vitamin A alcohol in coconut oil*

Each rat was given orally 3·0 mg. of vitamin A alcohol in 0·5 ml. of coconut oil. The results are averages of three separate experiments with individual rats. Values are expressed as μg. of vitamin A alcohol present as ester per whole organ in contents, mucosae, muscles and liver, and per 10 ml. of blood. S, 'Stearate'; P, 'palmitate'; M, 'myristate'; L, 'laurate'.

| | Time after dosing | | | | | | | | | | | | | | | | | | | | | | | |
|---|---|---|---|---|---|---|---|---|---|---|---|---|---|---|---|---|---|---|---|---|---|---|---|---|
| | 2 hr. | | | | 3 hr. | | | | 4 hr. | | | | 6 hr. | | | | 10 hr. | | | | 24 hr. | | | |
| Tissue | S | P | M | L | S | P | M | L | S | P | M | L | S | P | M | L | S | P | M | L | S | P | M | L |
| Intestine | | | | | | | | | | | | | | | | | | | | | | | | |
| Contents | 9 | 37 | 8 | 56 | 8 | 53 | 7 | 58 | 4 | 42 | 3 | 37 | 4 | 39 | 4 | 26 | 5 | 23 | 3 | 15 | 2 | 12 | 0 | 0 |
| Mucosae | 6 | 59 | 6 | 38 | 14 | 128 | 5 | 92 | 13 | 132 | 5 | 89 | 10 | 78 | 4 | 47 | 1 | 39 | 1 | 5 | 0 | 5 | 0 | 0 |
| Muscles | 4 | 67 | 4 | 18 | 6 | 132 | 5 | 15 | 6 | 138 | 4 | 19 | 4 | 84 | 3 | 13 | 0 | 48 | 1 | 4 | 0 | 8 | 0 | 0 |
| Blood | 1 | 14 | 1 | 3 | 1 | 23 | 1 | 4 | 1 | 32 | 1 | 8 | 1 | 27 | 1 | 5 | 0 | 18 | 0 | 2 | 0 | 0 | 0 | 0 |
| Liver | 0 | 125 | 0 | 0 | 0 | 170 | 0 | 0 | 0 | 376 | 0 | 0 | 0 | 729 | 0 | 0 | 0 | 820 | 0 | 0 | 0 | 1200 | 0 | 0 |

Fidge reported that 24 hours after the oral administration of 14 mcg $^{14}C$-labeled retinol to a rat, 47.5% of the radioactivity was recovered in the lymph, bile and liver; 79.5% in the lymph, 20.1% in the bile, and 0.1% in the liver (2732).

During the process of active absorption of vitamin A from the gut, retinyl esters, predominantly retinyl palmitate, are prevalent in the blood. However, in fasting blood retinyl esters are present to an extent of only 10-17%. The newly absorbed esters are taken up by the liver, where they are hydrolyzed and then re-esterified before being stored in the liver low-density proteins. While the liver is the primary storage site of retinol, traces of retinol have also been observed in the adrenals, kidneys, pancreas, thymus, lungs, spleen, and body fat. Retinol is stored in the liver as retinyl ester to the extent of 85-95% of the total, with 5-15% of the retinol in free form. Retinyl palmitate is by far the predominant form of retinyl ester present in the liver, with other esters such as stearate and oleate being found in considerably smaller amounts (10806, 10878, 10934).

The isomeric form of the vitamin A compound administered has been found to affect the biopotency, all-trans retinol being the most efficient form. Experimental data have suggested that cis isomers are converted to all-trans before they are utilized by the body. This conversion occurs primarily in the liver, and to a lesser extent in the stomach and intestines. The relative inefficiency of the cis isomers has been attributed to incomplete conversion and to poor absorption from the intestine (6564, 8674).

Taking 324 IU/g as the typical concentration of vitamin A in human liver, as was found for the medium value in Britain, and 1500 g as the weight of the liver, Moore calculated that the typical total liver reserve of vitamin A in the healthy adult is roughly 500,000 IU (6339).

Early studies on the distribution of retinol within the liver in-

dicated that retinol was probably stored in the Kupffer cells. However, more recent work has clearly shown that only 4% of the total retinol in the liver is present in the Kupffer cells, the remainder being stored in the hepatocytes (10878, 10934).

Retinol derivatives have been shown to recycle between the liver and the gut in an enterohepatic circulation. Following the injection of radioactive retinol into rats, intraportally or into the intestine, up to 35% of the radioactivity was excreted in the bile, as water soluble metabolites, within 24 hours. When whole bile or part of it was placed in a duodenal loop in vivo the radioactive derivatives of retinol disappeared from the gut and reappeared in the bile (30% within 24 hours) (10934, 10119, 10121).

Vitamin A stored in the liver is considered to be in a state of continuous turnover. Evidence for such turnover has been provided by studies in which tritium was stored in the liver of normal animals through the oral administration of tritium-labeled retinyl acetate. In the ensuing period the concentration of vitamin A in the liver remained relatively constant while the tritium activity decreased with time. These studies have shown the half-life of vitamin A in the liver of the rat to be 57 days and of the steer to be 48 days (3753, 8315).

For many years it could not be demonstrated that the hydrolysis of retinyl palmitate, the main storage form of retinol, takes place in the liver. Thus, it was assumed that retinyl palmitate was hydrolyzed in extrahepatic tissues and released into the blood stream as retinol (10878, 10934). However, in 1966 Mahadevan et al. reported the isolation from rat liver of a retinyl ester hydrolyzing enzyme specific for retinyl palmitate, thus demonstrating the possibility of intrahepatic hydrolysis (5663).

Upon hydrolysis of the retinyl esters stored in the liver, retinol is released into the blood for transport to other parts of the body. Retinol circulates in the plasma bound to a specific transport protein, retinol-binding protein (RBP). This high density plasma protein binds one mole of retinol per mole of protein. In plasma, the RBP circulates as a complex, in combination with another layer protein, which is considered to be a prealbumin (10806, 10878, 10934).

Retinol transport is now considered to proceed via dissociation of RBP from prealbumin after the stabilization of RBP-prealbimun under physiological conditions, followed by extrusion of retinol from RBP, deposition of retinol in a target cell and excretion of free RBP in urine (10934).

Various investigations have obtained values for average plasma vitamin A ranging from 91 to 201 IU/100 ml. Moore averaged those values to obtain a figure of 131 IU/100 ml (6339).

Sex and age have been found to have a significant influence on the

the level of vitamin A in the blood. On the average, men have been shown to exhibit a plasma vitamin A level approximately 20% higher than that of women. With respect to age, the vitamin A level in both sexes increases steadily up to a maximum at 50-60 years, after which it tends to decrease (5310, 6339).

The serum level of vitamin A is relatively independent of the liver reserve: as long as there are small reserves of vitamin A present in the liver, the blood level remains unchanged at the normal level. As soon as the liver is depleted of its vitamin A reserves, which may take several months on a vitamin-A free diet, there is a very rapid fall in the blood vitamin A level (10806, 10878, 10934).

## III. Metabolism and Excretion

Upon delivery of retinol to the various tissues, the retinol can be oxidized to its aldehyde, which in turn can be further oxidized irreversibly to retinoic acid. This conversion, shown in Figure 2, is well known. It is not yet clear, however, to what extent retinol is oxidized to retinoic acid for removal from the body, for although this conversion can be demonstrated in vivo, it is very difficult to measure how much retinoic acid is formed, presumably because of the very rapid metabolism of any retinoic acid produced (10806, 2093).

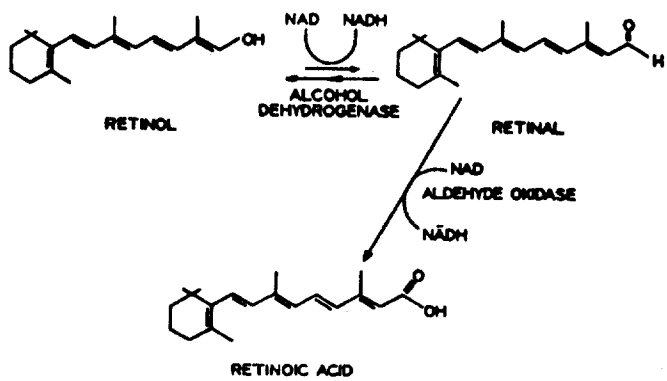


**Figure 1** Conversion of retinol to retinoic acid

On the basis of experiments using retinyl acetate and retinoic acid labelled with $^{14}C$ in various positions, three pathways of retinol and retinoic acid metabolism in the rat, shown in Scheme 2, were postulated by Roberts and DeLuca (7706). The metabolites produced through the first pathway are products in which the isoprenoid chain is maintained intact. These products include retinoyl and retinyl glucuronide derivatives. Although some of these glucuronides can be reabsorbed from the gut in what is presumably an enterohepatic circulation (as previously discussed), retinoic acid is not extensively conserved in the rat by this means, and the feces probably constitute one of the major routes for the excretion

of vitamin A derivatives. Metabolites are also excreted to a considerable extent in the urine, but have not been identified further than that they contain beta-glucuronides (10806, 7706).

Pathway II involves the oxidative decarboxylation of the side chain, yielding a metabolite shorter by one carbon. This product is excreted in the feces via the bile (7706).

In the third pathway the side chain is oxidized to some point between the 7 and 14 positions, with the production of metabolites which are subsequently excreted in the urine (7706).

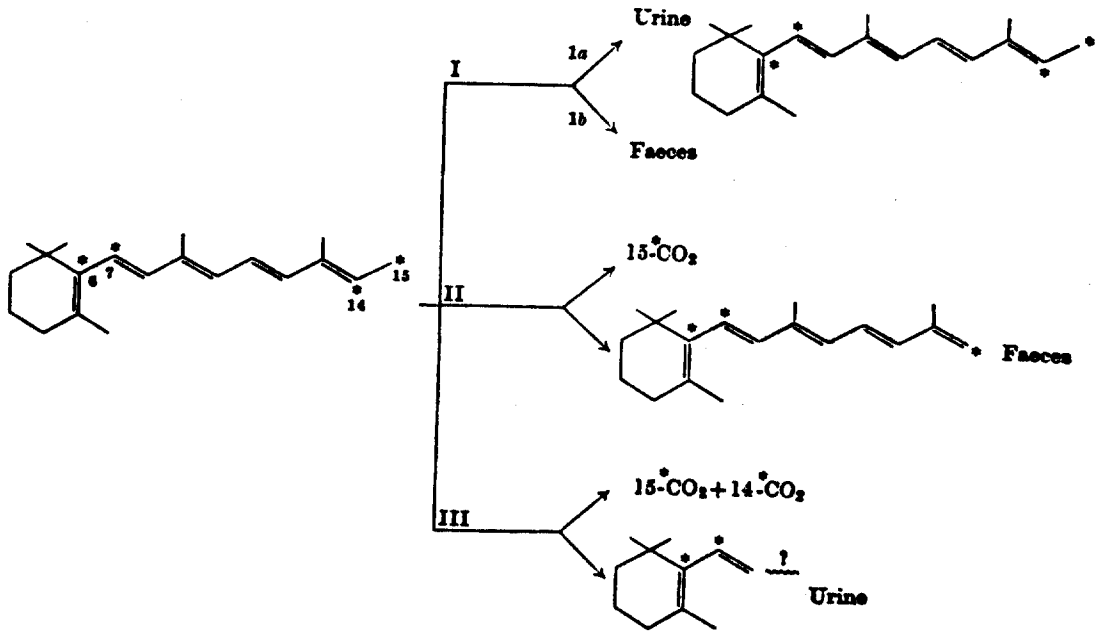


**Scheme 2** Possible metabolic pathways for retinoic acid or retinyl acetate: * indicates the position of the $^{14}C$ label. The structures shown represent the portion of the retinoic acid or retinol molecule that would become incorporated into a product after metabolism by the suggested pathways.

The estimated proportions of retinoic acid and retinyl acetate metabolized via these pathways, when given in low doses, are presented in Table 2 (7706).

**Table 2** *Estimates of percentages of retinoic acid or retinyl acetate metabolized by the postulated pathways at low dosage levels*

Pathways 1a and 1b are subdivisions of pathway I, and represent the distribution of the presumed intact side chain in the urinary and fascal products respectively.

| Pathway | Retinoic acid (%) | Retinyl acetate (%) |
|---|---|---|
| I | 62–65 | 67–79 |
| 1a | (18–20) | (30–32) |
| 1b | (43–45) | (36–38) |
| II | 18–20 | 9–12 |
| III | 18–20 | 17–19 |

The patterns of breakdown of retinol and retinoic acid appear to be roughly similar in the rat, but retinol is disposed of much more slowly. In the study by Roberts and DeLuca, intravenously administered $^{14}C$-labelled retinyl acetete was metabolized at a relatively slow, but almost constant rate by retinol-deficient rats. Approximately 30% of the administered radioactivity (2 mcg) was recovered in 4-5 days. Retinoic acid metabolism, however, is much more rapid, being virtually complete within 48 hours (14.5 mcg dose) (7706).

## IV. Effects on Enzymes and Other Biochemical Parameters

In 1971, Muenter et al. published the following compilation, Table 3, of laboratory findings from 17 cases of chronic vitamin A intoxication in human adults and adolescents (6499).

TABLE 3 Laboratory Findings in Seventeen Cases of Chronic Vitamin A Intoxication in Adults and Adolescents

| Test | Cases (no.) | |
|---|---|---|
| | Normal | Abnormal |
| Sedimentation rate (mm in one hr) | 1 | 7 (range: 22-87) |
| Sulfobromophthalein retention (%) | 3 | 3 (17, 26, 32) |
| Alkaline phosphatase | 3 | 7 (increased) |
| Serum total protein | 8 | 1 (decreased) |
| Serum total albumin | 1 | 7 (decreased) |
| Serum bilirubin: total | 7 | 5 (increased) |
| direct | 7 | 1 (increased) |
| indirect | 7 | 1 (increased) |
| Prothrombin time | 4 | 3 (increased) |
| Thymol turbidity | 9 | 1 (increased) |
| Cephalin flocculation | 9 | 2 (increased) |
| Hemoglobin (gm/100 ml) | 8 | 6 (decreased; range 10.2-12.0) |
| Leukocyte count (per cu mm) | 8 | 3 (3,200, 4,100, 4,300) |
| Protein-bound iodine (μg/100 ml) | 4 | 2 (1.8, 10.8) |
| Cholesterol | 6 | 2 (decreased) |
| Urinalysis | 6 | 3 (protein 1+) |
| Cerebrospinal fluid: Pressure (cm water) | 3* | 3 (35, 60 "increased") |
| Cells, protein | 5 | 0 |
| Roentgenogram of long bones and spine | 11 | 2 (demineralization) |
| Electroencephalogram | 4 | 2 (diffuse abnormality, projected type) |
| Serum vitamin A (μg/100 ml) | 0 | 17 (range, 83-2,000) |
| Serum carotene (μg/100 ml) | 6 | 3 (slightly increased; range 264-375) |

*These normal values were 13/13, and 7 cm water.

Sadhu and Brody found that daily oral doses of percomorph oil containing about 30,000 IU vitamin A depressed the basal metabolism and reduced the weight of the thyroids of normally-fed, thiouracil-treated, and thyroxine-treated rats (7938).

Liver and muscle metabolism were found by Ray and Sadhu to be depressed in young albino rats fed 30,000 IU vitamin A/day for 10 days (7569). They suggested that hypervitaminosis A inhibits liver respiration by affecting the dehydrogenase, or any immediate step following it (7568).

Determinations made by Rinaudo et al. (7686) on rats given, s.c. about 150,000 IU of vitamin A during a 2-week period showed significant reductions of uridine diphosphoglucose-glycogen glucosyl transferase and alpha-amylase, and an increase in glycogen phosphorylase. According to the authors, these results suggest that the decrease of hepatic glycogen found by Ray and Sadhu (7569) in hypervitaminotic rats may be attributable to a deceleration of the synthesis and to an increased breakdown of the glycogen.

Veil et al. found that the administration of 20,000 IU vitamin A/day to adult rats for 2-4 weeks resulted in a 12% diminution of the basal metabolism rate. On the basis of experiments using thyroidectomized rats, these workers concluded that the effect of vitamin A on BMR is mediated through thyroid secretion, and is actually due to acceleration of the catabolism of thyroxine (9418).

Upon feeding vitamin A palmitate to female rats for periods of 16 to 42 days, Sampson et al. found that oxygen consumption was decreased in hypervitaminotic rats receiving not more than 200 IU/g body weight but was increased in rats receiving 300 to 525 IU/g body weight (7994).

Kumar et al. found that i.m. treatment of young male rats with 150,000 IU vitamin A over a period of 2 weeks resulted in a significant increase in liver glycogen (5077).

The oral administration of 30,000 IU of retinol daily for even two days was found by Singh et al. to result in more than 600% increase in the fasting hepatic glycogen level in rats. Also, an elevation of plasma non-esterified fatty acids and blood lactic acid and glucose levels, and lowering of glucose tolerance were observed in the treated rats (8504).

In a later study by Singh et al., young male rats were given retinol orally in doses of 30000 IU daily for 2 days. These rats exhibited a marked increase in hepatic glycogen, cholesterol, and glycerides, while hepatic phospholipid content remained almost unchanged. Vitamin A administration resulted in increased incorporation of glucose-$^{14}C$ into liver lipids, but not liver proteins. This increased incorporation was confined to the glyceride-glycerol portion of the lipids; incorporation into liver fatty acids was inhibited. Plasma free fatty acid concentrations were elevated. It was also noted that the vitamin A treatment produced an increase in the weight of the adrenals and a decrease in the cholesterol content of the adrenals (8508).

Kryukova reported that, in rats, hypervitaminosis A, induced by feeding ordinary diets supplemented with 2000 IU vitamin A/day for 30-35 days, 20,000 IU/day for 50-70 days, or a single oral dose of 113,000 IU, caused a reduction in the total protein in the blood serum and liver, as well as an absolute and relative hypoalbuminemia (5045).

Upon oral administration of 40000 IU retinyl palmitate/day for 10 days to 6-7-week-old rats, Nerurkar and Sahasrabudhe observed the development of a negative balance for calcium, phosphorus and nitrogen (6708). Daily doses of 24,000 IU vitamin A acetate given to weanling rats, by gavage, for 4 weeks were found by Khogali to cause a negative calcium balance (4707).

Misra has conducted a series of studies on the effect of hypervitaminosis A on lipid metabolism in the rat. In these studies, hypervitaminosis A was induced by i.m. injection of 100,000 IU retinol daily for 10 or 13 days. This treatment was found to produce in the brain increases in the concentrations of total lipids and oleic acid and decreases in the concentrations of polyunsaturated fatty acids, with no significant effect on the saturated fatty acids. Analysis of intestinal lipids revealed increases in total lipids, monoglycerides, phosphatidic acid, and polyglycerol phosphatide. The kidneys showed a decrease in esterified cholesterol and an increase in phosphatidylethanolamine. The concentrations of triglycerides, phosphatidylcholine, and crude phosphatidylinositol fraction were found to be elevated in the spleens of hypervitaminotic rats, while the concentrations of diglycerides, phosphatidylethanolamine, sphingomyelin, and lysophosphatidylethanolamine fraction were decreased. With regard to the liver, retinol produced increases in the concentrations of free cholesterol, esterified cholesterol, monoglycerides, triglycerides, lysophosphatidylcholine, phosphatidylcholine, and phosphatidylethanolamine, and a decrease in the concentration of phosphatidylinositol (6219, 6220, 6221, 6222, 6223, 6226).

Ahuja and Misra analyzed the brain phospholipids of rats that received 33 mg of retinol/day orally for nine days. The amount of brain total phospholipid was not affected. However, the concentrations of phosphatidylcholine, phosphatidylethanolamine, phosphatidylserine, phosphatidylinositol, phosphatidic acid plus polyglycerol phosphatide, and sphingomyelin initially decreased for the first 4-5 days, increased to a peak at 5-7 days, and then decreased again (10188).

The effect of the consumption of 100,000 IU of vitamin A daily for 36 months on the levels of plasma cholesterol, phospholipid carotene and vitamins A, C, and E of 36 patients was studied by Van Bruggen and Straumfjord. The mean plasma vitamin A level after 36 months of treatment was 125% higher than that of the controls. Carotene and vitamin C levels were unchanged. After 18, 24, and 36 months, the vitamin E levels were raised 15.4, 22.5, and 25.7%, respectively. Increases of 13.8 and 20.8% for free and 11.1 and 22.3% for total plasma cholesterol were observed at 24 and 36 months, respectively. The free/total ratios remained unchanged. The phospholipid levels of the supplemented patients

were 10.4 and 18.5% higher than those of the controls at 24 and 36 months, respectively; however, only the latter figure was statistically significant. Six months after discontinuation of the treatment the cholesterol, phospholipid, and vitamin E levels had returned to normal (9346).

Pallotta and Krause gave subjects aged 64-80 years an oral dose of 50,000 IU vitamin A acetate twice a day for 6 months. Vitamin A administration significantly increased the serum vitamin A levels, reduced serum carotene levels, increased serum phospholipid levels, and reduced initially elevated cholesterol values. The $alpha_1$ globulin fraction was increased after 3 months (6986).

In the section Osteology-Chondrology, it was pointed out that excess vitamin A inhibits mucopolysaccharide (MPS) biosynthesis in cartilaginous tissue (2675, 2681, 5997, 9954). This inhibition has also been observed in other tissues. A marked loss of MPS from soft connective tissue (abdominal dermis) of rats was reported by Chung and Houck (1686) to result from 1 to 4 daily i.p. injections of 15,000 IU of vitamin A palmitate. McDonald (5985) found that gastric intubation of 100 or 500 IU of vitamin A/g body weight in addition to the normal diet for 1 to 10 days resulted in decreased MPS content of blood platelets in rats. Bazin and Delaunay (665) reported that 5-week-old rats treated by gastric intubation with 60,000 IU vitamin A/100 g body weight/day for 18 days exhibited a significant decrease in MPS content of normal and inflamed subcutaneous tissue as well as cartilage samples from the sternum and ears. Liver samples, however, showed an increase in MPS content. In direct contrast to this last finding, Koizumi et al. (4850) observed a pronounced decrease in the MPS content of rat livers following oral administration of 20,000 IU vitamin A acetate/100 g body weight/day for 4 to 8 days or 2000 IU of vitamin A palmitate/100 g body weight/day for 4 weeks.

Groups of 8 white rats weighing 135 g were fed a basal diet plus vitamin A as fish liver oil concentrate or as a preparation containing distilled vitamin A mixed in twice weekly. Both the ester and alcohol form were tested and found to have equal effects. Hypoprothrombinemia was produced in 10 days at 17,600 units per day, but 8,000-9,000 units per day had no effect. Levels of 35,000-40,000 units per day reduced the prothrombin content so much in 10 days that many animals died of cerebral hemorrhage. The addition of 25 mcg vitamin K/day prevented hypoprothrombinemia (5423).

Poole observed that rats fed vitamin A in doses of 40,000 IU daily, either as synthetic retinyl palmitate or a fish-oil concentrate, develop a coagulation defect, concluded to be a prothrombin deficiency, after about 10 days (7301).

In a study by Israels et al., three-month-old female hooded rats were given 70,000 units of vitamin A acetate by stomach tube daily for 28 days. The animals developed a hemorrhagic state characterized by a prolonged prothrombin time and stypven time, a marked reduction in prothrombin and the factor VII-complex, and an inconstant decrease in factor V

activity. The generation of thromboplastin was defective. Simultaneous daily feedings of 60-120 mcg of vitamin K prevented defects in the extrinsic system but were not consistently helpful to thromboplastin generation (4249).

Oral administration of 250,000 units of retinyl palmitate to female rats was found by Soliman to evoke significant reductions in the erythrocyte, hemoglobin, hematocrit, and thrombocyte values and in the concentrations of coagulation factors II, V, VII, and X with a consequent prolongation in the coagulation-, Quick- and partial thromboplastin times (10915).

In studying the effect of excessive vitamin A on the stability of the erythrocyte membrane, Dingle and Lucy found that erythrocytes (rabbit, pig, ox, rat, or human) are rapidly destroyed when suspended in an 0.9% sodium chloride solution at 37 degrees with 10 mcg or less of retinol per ml. The addition of sucrose to the medium was observed to increase the degree of lysis. Suspension of erythrocytes in serum, however, inhibits the lytic action of retinol, presumably through a protective action of the serum proteins (2198).

The changes in the fine structure of erythrocytes during hemolysis by vitamin A were investigated by Glauert et al. using rabbit erythrocytes. Within 1 minute of addition to an 0.9% NaCl solution containing 20 mcg retinol/ml, the cells exhibited a bizarre appearance with a greatly increased surface area. Large indentations appeared in the surface of the cells, and vacuoles formed from the indentations by a process resembling micropinocytosis. The cells then became spheroid and loss of hemoglobin began as breaks appeared in the membranes of some cells; finally, ghosts were produced that were no longer spheroid but still contained numerous vacuoles. It was suggested that these observations support the thesis that one site of vitamin A action is at the lipoprotein membranes (3217).

Ventura et al. reported that the oral administration to male Wistar rats of 500 IU vitamin A palmitate/g body weight/day for 3-4 weeks caused considerable changes in the cardiac intracellular action potential: decrease in amplitude, in depolarization rate, in fast and slow repolarization rate, and increase in partial and total duration. Hypervitaminosis A also produced an increase in spontaneous heart rate and systole duration and a decrease in diastole duration. It was suggested that these effects were the result of alterations in myocardial cell membrane permeability (10994).

An aspect of vitamin A pharmacology that has been much discussed, but apparently little researched, is its interaction with other vitamins. A great deal of conflict and uncertainty prevails in regard to these interactions; therefore, only brief mention will be given to the interactions reported. Vitamins A and D reportedly diminish the toxic effects of each other. Likewise, vitamin E spares the toxic effect of vitamin A.

However, in moderate quantities, vitamin E exerts a sparing action on vitamin A, as evidenced by liver storage. It has been suggested that muscle weakness and degeneration described in vitamin A toxicity may reflect a relative vitamin E deficiency. Nosebleeds, hemorrhagic diathesis, and prolongation of prothrombin time associated with vitamin A toxicity reportedly respond to vitamin K. The occurrence of a secondary vitamin K deficiency has been suggested as a symptom of hypervitaminosis A. Numerous writers have pointed out a resemblence of hypervitaminosis A to scurvy and there have been reports both affirming and denying the ability of ascorbic acid to counteract the effects of hypervitaminosis A (6339, 3681, 10567).

## V. Drug Interaction

Ershoff found that the addition of flavenoids to a diet containing 2000 to 3000 times the required amount of vitamin A accentuated the symptoms of hypervitaminosis A in rats. Calcium flavonate glycoside, naringen, hesperidin complex, hesperidin methyl chalcone, lemon bioflavonate complex, and rutin were added at levels of 0.5, 1, and 2% to a diet with an excess of vitamin A (3.75 million U.S.P. units/kg diet) and at 2% to a basal ration. Groups of 7-10 female young Holtzman rats were maintained on the basal ration and each of the above rations for 42 days. Eighteen animals consumed a diet supplemented with excess vitamin A alone. Rats fed flavenoid plus vitamin A suffered a more pronounced growth retardation, a higher incidence of spontaneous leg fractures, and a significant greater mortality than animals fed excess vitamin A alone. Symptoms were as marked at the 0.5% level as at the 2% level. When the flavenoids were fed without excess vitamin A, no untoward effects were observed. Preliminary studies indicated that flavenoids did not affect hypervitaminosis A symptoms in diets containing 1000 times or less the normal amount of vitamin A (2554).

When weanling rats were fed a synthetic ration containing 3 million U.S.P. units of vitamin A acetate plus 0.025 or 1% DPPD (di-phenyl-para-phenylenediamine) for six weeks, the DPPD potentiated the symptoms of hypervitaminosis A. Growth depression was more pronounced in the DPPD group, and 100% of the animals developed leg fractures in contrast to 50% of the rats given only a vitamin A supplement. Fifty percent of the DPPD group died within 6 weeks: the vitamin A group had 0% mortality. When DPPD was fed without excess vitamin A, the only effect noted was a slight growth retardation. The authors suggested that DPPD may have increased the absorption and/or utilization of vitamin A (1889).

Other antioxidants such as Santoquin, (6-ethoxy-2,2,4-trimethyl-1,2-dihydroxyquinoline), DBH (2,5-di-tert-butylhydroquinone), BHT (2,6-di-tert-butyl-para-cresol), and tocopherol alcohols were similarly tested and found to be without significant potentiating activity. However, sulfasuxadine and bile salts were also found to aggravate hypervitaminosis A in young rats (1889).

Iwanowska and Paczek reported that unsaturated fatty acids inhibited hypervitaminosis A in rats. For 6 weeks groups of 6 male albino rats on

a breeding ration received 30,000 IU of vitamin A (retinol), 30,000 IU of vitamin A plus 0.2 ml of unsaturated fatty acids (Linomag), or 0.2 ml of Linomag. The group fed only 30,000 IU vitamin A suffered weight loss; their hair was yellow, and their condition poor. Animals given both Linomag and excess vitamin A gained weight and were apparently healthy. Although animals fed Linomag alone failed to gain weight, they were in good shape. Further study indicated that unsaturated fatty acids are necessary for the assimilation of vitamin A in the rat, but increase fecal excretion and decrease liver storage of the vitamin (10596).

## VI. Consumer Exposure

In 1937 Daniel and Munsell (10345) drew data from 771 references to compile a comprehensive table of the vitamin content of a wide variety of foods. Since the table is over 70 pages long it is not reproduced here.

The following tables were compiled in 1972 with data submitted by user firms. Food consumption values for each food category were derived from the Market Research Corporation of America (MRCA) data on frequency of eating and from the USDA data on mean portion size of foods in each food category. The food consumption values thus derived were coupled with the usage level data obtained in the surveys to calculate the daily intake of each substance.

TABLE 1, PART A -- REPORTS SUBMITTED BY NAS RESPONDENTS ON SUBSTANCES LISTED IN NAS APPENDIX A (NAS SURVEY NOS. 0241-0243)

| NAS SURVEY NO. | SUBSTANCE NAME | ANNUAL POUNDAGE 1960 | ANNUAL POUNDAGE 1970 | SAFETY DATA: USERS | SAFETY DATA: NON-USERS | BIBLIOGRAPHY | MANUFACT INFO | USAGE LEVELS: USERS | USAGE LEVELS: NON-USERS |
|---|---|---|---|---|---|---|---|---|---|
| 0241 | VITAMIN A | 4 | 6 | 0 | 0 | 0 | 0 | 0 | 0 |
| 0242 | VITAMIN A ACETATE | * | * | * | 0 | * | * | * | 0 |
| 0243 | VITAMIN A PALMITATE | 31 | 38 | * | 0 | * | * | 40 | 0 |



TABLE 2 -- USAGE LEVELS REPORTED FOR NAS APPENDIX A SUBSTANCES (GROUP I) USED IN REGULAR FOODS(R)

| SUBSTANCE NAME (SURVEY NO.) | FOOD CATAGORY NO. | FOOD CATAGORY NAME | NO. FIRMS REPORTING | *** USUAL USE *** WTD MEAN, % | *** MAXIMUM USE *** WTD MEAN, % |
|---|---|---|---|---|---|
| VITAMIN A NAS 0241 | 04 | FATS OILS(R) | 4 | .00063 | .00063 |
| | 05 | MILK PRODS(R) | * | .00006 | .00006 |
| | 23 | BEV TYPE I(R) | * | .00300 | .00300 |
| VITAMIN A ACETATE NAS 0242 | 02 | BREAK CERLS(R) | * | .00010 | .00010 |
| | 04 | FATS OILS(R) | * | .00095 | .00125 |
| | 14 | PROCSD VEGS(R) | * | .02700 | .03000 |
| VITAMIN A PALMITATE NAS 0243 | 01 | BAKED GOODS(R) | 5 | .00001 | .00002 |
| | 02 | BREAK CERLS(R) | 9 | .00480 | .00760 |
| | 03 | OTHER GRAIN(R) | * | .00001 | .00010 |
| | 04 | FATS OILS(R) | 5 | .00157 | .00204 |
| | 05 | MILK PRODS(R) | 12 | .00047 | .00052 |
| | 07 | FROZN DAIRY(R) | * | .00250 | .00250 |
| | 10 | MEAT PRODS(R) | * | .00061 | .00061 |
| | 11 | POULTRY(R) | * | .00061 | .00061 |
| | 14 | PROCSD VEGS(R) | * | .00019 | .00026 |
| | 16 | SOFT CANDY(R) | * | .02000 | .02000 |
| | 19 | SWEET SAUCE(R) | * | .00261 | .00293 |
| | 22 | SNACK FOODS(R) | * | .00000 | .00000 |
| | 23 | BEV TYPE I(R) | 4 | .00576 | .00576 |
| | 25 | NUT PRODS(R) | * | .01800 | .02000 |
| | 28 | IMIT DAIRY(R) | * | .00000 | .00000 |

JAN 29, 1973 COMPREHENSIVE GRAS SURVEY -- NAS/NRC 1972 PAGE 5

TABLE 3 -- USAGE LEVELS REPORTED FOR NAS APPENDIX A SUBSTANCES (GROUP II) USED IN INFANT FORMULA PRODUCTS AND BABY FOODS(B)

| SUBSTANCE NAME (SURVEY NO.) | FOOD CATAGORY NO. | NAME | NO. FIRMS REPORTING | *** USUAL USE *** WTD MEAN, % | *** MAXIMUM USE *** WTD MEAN, % |
|---|---|---|---|---|---|
| VITAMIN A PALMITATE NAS 0243 | 83 | FORMULAS(B) | 8 | .00025 | .00038 |

APR 27, 1973 COMPREHENSIVE GRAS SURVEY -- NAS/NRC 1972 PAGE 5

TABLE 7 -- TECHNICAL EFFECTS AND IMPORTANCE RATINGS FOR NAS APPENDIX A SUBSTANCES USED IN INFANT FORMULA PRODUCTS AND BABY FOODS (GROUP II)

| SUBSTANCE NAME (SURVEY NO.) | TECHNICAL EFFECT NO. | NAME | NO. TIMES EFFECT REPORTED | IMPORTANCE RATINGS, % A | B | C |
|---|---|---|---|---|---|---|
| VITAMIN A PALMITATE NAS 0243 | 19 | NUTR SUPPL | 10 | 90.0 | 10.0 | .0 |

APR 28, 1973 COMPREHENSIVE GRAS SURVEY -- NAS/NRC 1972 PAGE 12

TABLE 11, PART A -- ANNUAL POUNDAGE DATA FOR NAS APPENDIX A SUBSTANCES (GROUPS I & II)

| SUBSTANCE NAME (SURVEY NO.) | NO. REPORTS TO NAS 1960/1970 | POUNDAGE REPORTED TO NAS (MATCHING REPORTS FOR BOTH YEARS) 1960 | 1970 | TOTAL 1970 POUNDAGE REPORTED TO NAS | NO. REPORTS TO FEMA | POUNDAGE REPORTED TO FEMA-- 1970 ONLY | TOTAL 1970 POUNDAGE NAS + FEMA |
|---|---|---|---|---|---|---|---|
| VITAMIN A NAS 0241 | 4/ 6 | 850 | 4,236 | 5,622 | | | 6,622 |
| VITAMIN A ACETATE NAS 0242 | */ * | 600 | 665 | 665 | | | 665 |
| VITAMIN A PALMITATE NAS 0243 | 31/ 38 | 145,150 | 171,564 | 173,403 | | | 178,403 |

TABLE 13, PART A -- POSSIBLE DAILY INTAKES OF NAS APPENDIX A SUBSTANCES (GROUPS I & II), PER FOOD CATEGORY AND TOTAL DIETARY, BASED ON FOOD CONSUMPTION BY TOTAL SAMPLE - - - SEE EXPLANATORY NOTES IN EXHIBIT SECTION

| SUBSTANCE NAME (SURVEY NO.) | FOOD CATEGORY NO. | NAME | NO OF FIRMS | (AGE) | POSSIBLE DAILY INTAKE, MG. AVERAGE | HIGH A | HIGH B |
|---|---|---|---|---|---|---|---|
| VITAMIN A NAS 0241 | 04 | FATS OILS(R) | 4 | 0-5 MO. | .003150 | .003150 | .003150 |
| | | | | 6-11 MO. | .017640 | .047250 | .017640 |
| | | | | 12-23 MO. | .039690 | .075600 | .039690 |
| | | | | 2-65+ YR. | .110250 | .199080 | .110250 |
| VITAMIN A NAS 0241 | 05 | MILK PRODS(R) | * | 0-5 MO. | .003240 | .002400 | .003240 |
| | | | | 6-11 MO. | .037440 | .180060 | .037440 |
| | | | | 12-23 MO. | .032700 | .104640 | .032700 |
| | | | | 2-65+ YR. | .023700 | .072360 | .023700 |
| VITAMIN A NAS 0241 | 23 | BEV TYPE I(R) | * | 0-5 MO. | .072000 | .108000 | .072000 |
| | | | | 6-11 MO. | .681000 | 2.331000 | .681000 |
| | | | | 12-23 MO. | 1.626000 | 4.875000 | 1.626000 |
| | | | | 2-65+ YR. | 3.120000 | 8.331000 | 3.120000 |
| VITAMIN A NAS 0241 | 99 | ALL CATEGORIES | 6 | 0-5 MO. | .078390 | .113550 | .078390 |
| | | | | 6-11 MO. | .736080 | 2.558310 | .736080 |

TABLE 13. PART A -- POSSIBLE DAILY INTAKES OF NAS APPENDIX A SUBSTANCES (GROUPS I & II), PER FOOD CATEGORY AND TOTAL DIETARY, BASED ON FOOD CONSUMPTION BY TOTAL SAMPLE - - - SEE EXPLANATORY NOTES IN EXHIBIT SECTION

| SUBSTANCE NAME (SURVEY NO.) | FOOD CATEGORY NO. | FOOD CATEGORY NAME | NO OF FIRMS | (AGE) | POSSIBLE DAILY INTAKE, MG. AVERAGE | HIGH A | HIGH B |
|---|---|---|---|---|---|---|---|
| VITAMIN A NAS 0241 | 99 | ALL CATEGORIES | 6 | 12-23 MO. | 1.698390 | 5.055240 | 1.698390 |
| | | | | 2-65+ YR. | 3.253950 | 8.602440 | 3.253950 |
| VITAMIN A ACETATE NAS 0242 | 02 | BREAK CERLS(R) | * | 0-5 MO. | .000600 | .001700 | .000600 |
| | | | | 6-11 MO. | .022300 | .059800 | .022300 |
| | | | | 12-23 MO. | .026100 | .050900 | .026100 |
| | | | | 2-65+ YR. | .020000 | .051800 | .020000 |
| VITAMIN A ACETATE NAS 0242 | 04 | FATS OILS(R) | * | 0-5 MO. | .004750 | .004750 | .006250 |
| | | | | 6-11 MO. | .026600 | .071250 | .035000 |
| | | | | 12-23 MO. | .059850 | .114000 | .078750 |
| | | | | 2-65+ YR. | .166250 | .300200 | .218750 |
| VITAMIN A ACETATE NAS 0242 | 14 | PROCSD VEGS(R) | * | 0-5 MO. | .378000 | 1.134000 | .420000 |
| | | | | 6-11 MO. | 6.480000 | 15.120000 | 7.200000 |
| | | | | 12-23 MO. | 10.530000 | 17.631000 | 11.700000 |
| | | | | 2-65+ YR. | 22.950000 | 38.664000 | 25.500000 |
| VITAMIN A ACETATE NAS 0242 | 99 | ALL CATEGORIES | * | 0-5 MO. | .383350 | 1.140450 | .426850 |
| | | | | 6-11 MO. | 6.528900 | 15.251050 | 7.257300 |
| | | | | 12-23 MO. | 10.615950 | 17.795900 | 11.804850 |
| | | | | 2-65+ YR. | 23.136250 | 39.016000 | 25.738750 |
| VITAMIN A PALMITATE NAS 0243 | 01 | BAKED GOODS(R) | 5 | 0-5 MO. | .000340 | .000450 | .000680 |
| | | | | 6-11 MO. | .002540 | .005180 | .005080 |
| | | | | 12-23 MO. | .005450 | .008980 | .010900 |
| | | | | 2-65+ YR. | .013720 | .020380 | .027440 |
| VITAMIN A PALMITATE NAS 0243 | 02 | BREAK CERLS(R) | 9 | 0-5 MO. | .029800 | .081600 | .045600 |
| | | | | 6-11 MO. | 1.070400 | 2.870400 | 1.694800 |
| | | | | 12-23 MO. | 1.252800 | 2.443200 | 1.983600 |
| | | | | 2-65+ YR. | .950000 | 2.486400 | 1.520000 |
| VITAMIN A PALMITATE NAS 0243 | 03 | OTHER GRAIN(R) | * | 0-5 MO. | .000050 | .000170 | .000500 |
| | | | | 6-11 MO. | .000970 | .002860 | .009700 |
| | | | | 12-23 MO. | .001640 | .003790 | .016400 |

TABLE 13, PART A -- POSSIBLE DAILY INTAKES OF NAS APPENDIX A SUBSTANCES (GROUPS I & II), PER FOOD CATEGORY AND TOTAL DIETARY, BASED ON FOOD CONSUMPTION BY TOTAL SAMPLE - - - SEE EXPLANATORY NOTES IN EXHIBIT SECTION

| SUBSTANCE NAME (SURVEY NO.) | FOOD CATEGORY NO. | NAME | NO OF FIRMS | (AGE) | POSSIBLE DAILY INTAKE, MG. AVERAGE | HIGH A | HIGH B |
|---|---|---|---|---|---|---|---|
| VITAMIN A PALMITATE NAS 0243 | 03 | OTHER GRAIN(R) | * | 2-65+ YR. | .002730 | .006140 | .027800 |
| VITAMIN A PALMITATE NAS 0243 | 04 | FATS OILS(R) | 5 | 0-5 MO. | .007850 | .007850 | .010200 |
| | | | | 6-11 MO. | .043960 | .117750 | .057120 |
| | | | | 12-23 MO. | .098910 | .188400 | .128520 |
| | | | | 2-65+ YR. | .274750 | .496120 | .357000 |
| VITAMIN A PALMITATE NAS 0243 | 05 | MILK PRODS(R) | 12 | 0-5 MO. | .025380 | .018800 | .028080 |
| | | | | 6-11 MO. | .293280 | 1.410470 | .324480 |
| | | | | 12-23 MO. | .256150 | .819680 | .283400 |
| | | | | 2-65+ YR. | .185650 | .566820 | .205400 |
| VITAMIN A PALMITATE NAS 0243 | 07 | FROZN DAIRY(R) | * | 0-5 MO. | .025000 | .102500 | .025000 |
| | | | | 6-11 MO. | .237500 | .660000 | .237500 |
| | | | | 12-23 MO. | .360000 | .845000 | .360000 |
| | | | | 2-65+ YR. | .640000 | 1.542500 | .640000 |
| VITAMIN A PALMITATE NAS 0243 | 10 | MEAT PRODS(R) | * | 0-5 MO. | .006710 | .017690 | .006710 |
| | | | | 6-11 MO. | .126270 | .340380 | .126270 |
| | | | | 12-23 MO. | .184220 | .316590 | .184220 |
| | | | | 2-65+ YR. | .478240 | .793610 | .478240 |
| VITAMIN A PALMITATE NAS 0243 | 11 | POULTRY(R) | * | 0-5 MO. | .003050 | .014030 | .003050 |
| | | | | 6-11 MO. | .023790 | .080520 | .023790 |
| | | | | 12-23 MO. | .040260 | .112240 | .040260 |
| | | | | 2-65+ YR. | .078690 | .200080 | .078690 |
| VITAMIN A PALMITATE NAS 0243 | 14 | PROCSD VEGS(R) | * | 0-5 MO. | .002660 | .007980 | .003640 |
| | | | | 6-11 MO. | .045600 | .106400 | .062400 |
| | | | | 12-23 MO. | .074100 | .124070 | .101400 |
| | | | | 2-65+ YR. | .161500 | .272080 | .221000 |
| VITAMIN A PALMITATE NAS 0243 | 16 | SOFT CANDY(R) | * | 0-5 MO. | .040000 | .400000 | .040000 |
| | | | | 6-11 MO. | .440000 | 1.360000 | .440000 |
| | | | | 12-23 MO. | .700000 | 1.860000 | .700000 |
| | | | | 2-65+ YR. | 1.160000 | 3.520000 | 1.160000 |

TABLE 13, PART A -- POSSIBLE DAILY INTAKES OF NAS APPENDIX A SUBSTANCES (GROUPS I & II), PER FOOD CATEGORY AND TOTAL DIETARY, BASED ON FOOD CONSUMPTION BY TOTAL SAMPLE - - - SEE EXPLANATORY NOTES IN EXHIBIT SECTION

| SUBSTANCE NAME (SURVEY NO.) | FOOD CATEGORY NO. | FOOD CATEGORY NAME | NO OF FIRMS | POSSIBLE DAILY INTAKE, MG. (AGE) | AVERAGE | HIGH A | HIGH B |
|---|---|---|---|---|---|---|---|
| VITAMIN A PALMITATE NAS 0243 | 19 | SWEET SAUCE(R) | * | 0-5 MO. | .007830 | .010440 | .008790 |
| | | | | 6-11 MO. | .023490 | .030910 | .026370 |
| | | | | 12-23 MO. | .067860 | .198360 | .076180 |
| | | | | 2-65+ YR. | .177480 | .467190 | .199240 |
| VITAMIN A PALMITATE NAS 0243 | 22 | SNACK FOODS(R) | * | 0-5 MO. | ********** | .000000 | ********** |
| | | | | 6-11 MO. | .000000 | .000000 | .000000 |
| | | | | 12-23 MO. | .000000 | .000000 | .000000 |
| | | | | 2-65+ YR. | .000000 | .000000 | .000000 |
| VITAMIN A PALMITATE NAS 0243 | 23 | BEV TYPE I(R) | 4 | 0-5 MO. | .138240 | .207360 | .138240 |
| | | | | 6-11 MO. | 1.307520 | 4.475520 | 1.307520 |
| | | | | 12-23 MO. | 3.121920 | 9.360000 | 3.121920 |
| | | | | 2-65+ YR. | 5.990400 | 15.995520 | 5.990400 |
| VITAMIN A PALMITATE NAS 0243 | 25 | NUT PRODS(R) | * | 0-5 MO. | ********** | .036000 | ********** |
| | | | | 6-11 MO. | .566000 | 2.412000 | .740000 |
| | | | | 12-23 MO. | .486000 | 1.620000 | .540000 |
| | | | | 2-65+ YR. | .936000 | 2.790000 | 1.040000 |
| VITAMIN A PALMITATE NAS 0243 | 28 | IMIT DAIRY(R) | * | 0-5 MO. | .000000 | .000000 | .000000 |
| | | | | 6-11 MO. | .000000 | .000000 | .000000 |
| | | | | 12-23 MO. | .000000 | .000000 | .000000 |
| | | | | 2-65+ YR. | .000000 | .000000 | .000000 |
| VITAMIN A PALMITATE NAS 0243 | 83 | FORMULAS(B) | 8 | 0-5 MO. | .839250 | 1.537500 | 1.275660 |
| | | | | 6-11 MO. | .171000 | .814750 | .259920 |
| | | | | 12-23 MO. | .055000 | .015500 | .083600 |
| VITAMIN A PALMITATE NAS 0243 | 99 | ALL CATEGORIES | 40 | 0-5 MO. | 1.125160 | 2.442370 | 1.586150 |
| | | | | 6-11 MO. | 4.452320 | 14.737140 | 5.314950 |
| | | | | 12-23 MO. | 6.704310 | 17.915810 | 7.630400 |
| | | | | 2-65+ YR. | 11.059210 | 29.156840 | 11.945210 |

TABLE 14, PART A -- POTENTIAL DAILY INTAKES OF NAS APPENDIX A SUBSTANCES (GROUP I & II), PER FOOD CATEGORY, BASED ON FOOD CONSUMPTION BY EATERS ONLY - - - SEE EXPLANATORY NOTES IN EXHIBITS SECTION

| FOOD CATEGORY | SUBSTANCE NAME (NO. NAME AGE) | NO. OF (SURVEY NO.) AVERAGE | ********** POTENTIAL DAILY INTAKE, MG., PER CATEGORY ********** FIRMS ( VERY HIGH HIGH A | HIGH B | | | |
|---|---|---|---|---|---|---|---|
| 01 BAKED GOODS(R) | VITAMIN A PALMITATE NAS 0243 | 5 | .001550 | 0-5 MO. | .005130 | .003100 | .010260 |
| | | | .002870 | 6-11 MO. | .005450 | .005740 | .010900 |
| | | | .005490 | 12-23 MO. | .008980 | .010980 | .017960 |
| | | | .013730 | 2-65+ YR. | .020390 | .027460 | .040780 |
| 02 BREAK CERLS(R) | VITAMIN A ACETATE NAS 0242 | * | .005100 | 0-5 MO. | .013300 | .005100 | .013300 |
| | | | .033100 | 6-11 MO. | .065100 | .033100 | .065100 |
| | | | .028400 | 12-23 MO. | .051400 | .028400 | .051400 |
| | | | .026800 | 2-65+ YR. | .055500 | .026800 | .055500 |
| | VITAMIN A PALMITATE NAS 0243 | 9 | .244800 | 0-5 MO. | .638400 | .387600 | 1.010800 |
| | | | 1.588800 | 6-11 MO. | 3.124800 | 2.515600 | 4.947600 |
| | | | 1.363200 | 12-23 MO. | 2.467200 | 2.158400 | 3.906400 |
| | | | 1.286400 | 2-65+ YR. | 2.664000 | 2.036800 | 4.218000 |
| 03 OTHER GRAIN(R) | VITAMIN A PALMITATE NAS 0243 | * | .000890 | 0-5 MO. | .001860 | .008900 | .018600 |
| | | | .001810 | 6-11 MO. | .004150 | .018100 | .041500 |
| | | | .001990 | 12-23 MO. | .003970 | .019900 | .039700 |
| | | | .003420 | 2-65+ YR. | .006730 | .034200 | .067300 |
| 04 FATS OILS(R) | VITAMIN A NAS 0241 | 4 | .030870 | 0-5 MO. | .087570 | .030870 | .087570 |
| | | | .025830 | 6-11 MO. | .052290 | .025830 | .052290 |
| | | | .040950 | 12-23 MO. | .076230 | .040950 | .076230 |
| | | | .112140 | 2-65+ YR. | .200340 | .112140 | .200340 |
| | VITAMIN A ACETATE NAS 0242 | * | .046550 | 0-5 MO. | .132050 | .061250 | .173750 |
| | | | .038950 | 6-11 MO. | .078850 | .051250 | .103750 |
| | | | .061750 | 12-23 MO. | .114950 | .081250 | .151250 |
| | | | .169100 | 2-65+ YR. | .302100 | .222500 | .397500 |
| | VITAMIN A PALMITATE NAS 0243 | 5 | .076930 | 0-5 MO. | .218230 | .099960 | .283560 |
| | | | .064370 | 6-11 MO. | .130310 | .083640 | .169320 |
| | | | .102050 | 12-23 MO. | .189970 | .132600 | .246840 |
| | | | .279460 | 2-65+ YR. | .499260 | .363120 | .648720 |

TABLE 14. PART A -- POTENTIAL DAILY INTAKES OF NAS APPENDIX A SUBSTANCES (GROUP I & II), PER FOOD CATEGORY, BASED ON FOOD CONSUMPTION BY EATERS ONLY - - - SEE EXPLANATORY NOTES IN EXHIBITS SECTION

| FOOD CATEGORY | SUBSTANCE NAME (NO. NAME AGE) | NO. OF FIRMS (SURVEY NO.) | POTENTIAL DAILY INTAKE, MG., PER CATEGORY ********** AVERAGE | HIGH A | HIGH B | VERY HIGH | |
|---|---|---|---|---|---|---|---|
| 05 MILK PRODS(R) | VITAMIN A NAS 0241 | * | .034080 | 2-65+ YR. | .093240 | .034080 | .093240 |
| | VITAMIN A PALMITATE NAS 0243 | 12 | .245340 | 0-5 MO. | .532510 | .271440 | .589160 |
| | | | .617110 | 6-11 MO. | 1.878120 | .682760 | 2.077920 |
| | | | .396680 | 12-23 MO. | 1.445250 | .438880 | 1.599000 |
| | | | .266960 | 2-65+ YR. | .730380 | .295360 | .808080 |
| | VITAMIN A NAS 0241 | * | .031320 | 0-5 MO. | .067980 | .031320 | .067980 |
| | | | .078780 | 6-11 MO. | .239760 | .078780 | .239760 |
| | | | .050640 | 12-23 MO. | .184500 | .050640 | .184500 |
| 10 MEAT PRODS(R) | VITAMIN A PALMITATE NAS 0243 | * | .066490 | 0-5 MO. | .166530 | .066490 | .166530 |
| | | | .183610 | 6-11 MO. | .373320 | .183610 | .373320 |
| | | | .193370 | 12-23 MO. | .320250 | .193370 | .320250 |
| | | | .483120 | 2-65+ YR. | .795440 | .483120 | .795440 |
| 11 POULTRY(R) | VITAMIN A PALMITATE NAS 0243 | * | .061000 | 0-5 MO. | .152500 | .061000 | .152500 |
| | | | .066490 | 6-11 MO. | .125660 | .066490 | .125660 |
| | | | .078080 | 12-23 MO. | .132980 | .078080 | .132980 |
| | | | .124440 | 2-65+ YR. | .239120 | .124440 | .239120 |
| 14 PROCSD VEGS(R) | VITAMIN A ACETATE NAS 0242 | * | 2.214000 | 0-5 MO. | 4.239000 | 2.460000 | 4.710000 |
| | | | 8.154000 | 6-11 MO. | 15.849000 | 9.060000 | 17.610000 |
| | | | 10.908000 | 12-23 MO. | 17.739000 | 12.120000 | 19.710000 |
| | | | 23.085000 | 2-65+ YR. | 38.718000 | 25.650000 | 43.020000 |
| | VITAMIN A PALMITATE NAS 0243 | * | .015580 | 0-5 MO. | .029830 | .021320 | .040820 |
| | | | .057380 | 6-11 MO. | .111530 | .078520 | .152620 |
| | | | .076760 | 12-23 MO. | .124830 | .105040 | .170820 |
| | | | .162450 | 2-65+ YR. | .272460 | .222300 | .372840 |

TABLE 14, PART A -- POTENTIAL DAILY INTAKES OF NAS APPENDIX A SUBSTANCES (GROUP I & II), PER FOOD CATEGORY, BASED ON FOOD CONSUMPTION BY EATERS ONLY - - - SEE EXPLANATORY NOTES IN EXHIBITS SECTION

| FOOD CATEGORY | SUBSTANCE NAME No. NAME | NO. OF FIRMS (SURVEY NO.) | ********** POTENTIAL DAILY INTAKE, MG., PER CATEGORY ********** | | | | |
|---|---|---|---|---|---|---|---|
| | AGE) | AVERAGE | HIGH A | | HIGH B | ( VERY HIGH | |
| 16 SOFT CANDY(R) | VITAMIN A PALMITATE NAS 0243 | * | 1.120000 | 0-5 MO. | 1.880000 | 1.120000 | 1.880000 |
| | | | 1.500000 | 6-11 MO. | 3.400000 | 1.500000 | 3.400000 |
| | | | 1.480000 | 12-23 MO. | 3.200000 | 1.480000 | 3.200000 |
| | | | 2.280000 | 2-65+ YR. | 4.940000 | 2.280000 | 4.940000 |
| 19 SWEET SAUCE(R) | VITAMIN A PALMITATE NAS 0243 | * | .214020 | 0-5 MO. | .548100 | .240260 | .615300 |
| | | | .065250 | 6-11 MO. | .127890 | .073250 | .143570 |
| | | | .125280 | 12-23 MO. | .224460 | .140640 | .251980 |
| | | | .321030 | 2-65+ YR. | .636840 | .360390 | .714920 |
| 22 SNACK FOODS(R) | VITAMIN A PALMITATE NAS 0243 | * | .000000 | 0-5 MO. | .000000 | .000000 | .000000 |
| | | | .000000 | 6-11 MO. | .000000 | .000000 | .000000 |
| | | | .000000 | 12-23 MO. | .000000 | .000000 | .000000 |
| | | | .000000 | 2-65+ YR. | .000000 | .000000 | .000000 |
| 23 BEV TYPE I(R) | VITAMIN A NAS 0241 | * | 4.269000 | 2-65+ YR. | 9.567000 | 4.269000 | 9.567000 |
| | VITAMIN A PALMITATE NAS 0243 | * | 1.877760 | 0-5 MO. | 7.799040 | 1.877760 | 7.799040 |
| | | | 2.712960 | 6-11 MO. | 6.071040 | 2.712960 | 6.071040 |
| | | | 4.677120 | 12-23 MO. | 10.753920 | 4.677120 | 10.753920 |
| | | | 8.196480 | 2-65+ YR. | 18.368640 | 8.196480 | 18.368640 |
| | VITAMIN A NAS 0241 | * | .978000 | 0-5 MO. | 4.062000 | .978000 | 4.062000 |
| | | | 1.413000 | 6-11 MO. | 3.162000 | 1.413000 | 3.162000 |
| | | | 4.436000 | 12-23 MO. | 5.601000 | 2.436000 | 5.601000 |
| 28 IMIT DAIRY(R) | VITAMIN A PALMITATE NAS 0243 | * | .000000 | 0-5 MO. | .000000 | .000000 | .000000 |
| | | | .000000 | 6-11 MO. | .000000 | .000000 | .000000 |
| | | | .000000 | 12-23 MO. | .000000 | .000000 | .000000 |
| | | | .000000 | 2-65+ YR. | .000000 | .000000 | .000000 |

TABLE 14, PART A -- POTENTIAL DAILY INTAKES OF NAS APPENDIX A SUBSTANCES (GROUP I & II), PER FOOD CATEGORY, BASED ON FOOD CONSUMPTION BY EATERS ONLY - - - SEE EXPLANATORY NOTES IN EXHIBITS SECTION

| FOOD CATEGORY | SUBSTANCE NAME No. NAME AGE) | NO. OF (SURVEY NO.) | POTENTIAL DAILY INTAKE, MG., PER CATEGORY | FIRMS | ( VERY HIGH | | |
|---|---|---|---|---|---|---|---|
| | | | AVERAGE | HIGH A | HIGH B | | |
| 23 FORMULAS(8) | VITAMIN A PALMITATE NAS 0243 | 8 | 1.007250 | 0-5 MO. | 1.632000 | 1.531020 | 2.480640 |
| | | | .790280 | 6-11 MO. | 1.524256 | 1.109080 | 2.316060 |
| | | | .896750 | 12-23 MO. | 1.850256 | 1.369000 | 2.826060 |

# Appendix

## Vitamin A Deficiency

The material in this section was compiled by FDRL. Several of the citations could not be identified, and one identified (5136) could not be obtained.

## Vitamin A Deficiency

Metabolic, biosynthetic, and reproductive processes are disturbed in many species either by excessive vitamin A intake or by chronic vitamin A deficiency. For example in a feeding study extending for 52 weeks groups of 30 to 45 gram weanling albino rats fed on a vitamin A deficient diet consisting mainly of casein, cornstarch, yeast, cottonseed oil and vitamin D were supplemented with 10, 15, 20, 30, 50 and 80 units of vitamin A per kilogram body weight respectively. It was observed that during the 9 weeks following weaning the 10 and 15 i. u. supplementation was insufficient to maintain a normal growth rate for both the male and female animals. During this 9 week period also an unequal dependency was apparent on the level of vitamin A intake since the male animals constantly required the highest level of vitamin A for normal growth as compared with the females which grew at normal rates when the diet was supplemented with vitamin A of 30 to 50 i. u. With both sexes one of the earliest detectable signs of vitamin A deficiency was the appearance of hemeralopia, which, in the case of the females, was followed closely by a continuous quantification of the vaginal contents. It was found that those animals fed less than 50 to 80 units of vitamin A per kilogram of body weight per day did not store any measurable quantity of vitamin A in the liver which suggested to these investigators

that in the case of this species some considerable need of the rat's body must be met in an apparently normal animal before liver storage occurs. It was also concluded that the minimum vitamin A requirement in the rat may be somewhat higher than 20 i. u. per kilogram body weight per day. In this study, the source of the vitamin A was a U. S. P. reference codliver oil having a potency of 3, 000 i. u. per gram which was diluted with cottonseed oil to yield the levels used for supplementation (1379).

The greater dependency of the young male rats for vitamin A as compared with female rats was confirmed in a later study by these investigators using different sources of vitamin A i. e. from vegetable carotene, vitamin A from animal sources and vitamin A from codliver oil. Again it was found that although the ability of both sexes to convert carotene into vitamin A was about equal, young male rats were more sensitive to low levels of vitamin A than were young female rats. The consequences of this unequal dependency in addition to the effect on the growth rate was a significantly higher death rate in the males. (1876).

The large body need for vitamin A before storage proceeds suggests that the vitamin is involved in a large number of processes, most of which remain to be identified. In one study the relationship between cholesterol intake and the vitamin A level was explored using weanling albino rats of both sexes. Those rats fed on a vitamin A free diet

ceased gaining weight after 4 to 5 weeks at which point they received by stomach tube a dose of 1 mg of cholesterol in 0.5 ml of cottonseed oil. Cholesterol feeding is known to increase the hepatic storage of cholesterol in rats and in this investigation it was found that irrespective of the form in which cholesterol was administered the storage was accentuated during the period of vitamin A deficiency, and furthermore was found to be more pronounced in males than in females. It was concluded by these workers that this enhanced storage effect of cholesterol was due not to a decrease in its turnover rate but rather to an increased rate of absorption, suggesting that normally vitamin A will interfere with the absorption of cholesterol across the digestive tract. This idea seemed to be confirmed in another part of the study in which the cholesterol absorption was found to be markedly depressed in those animals receiving relatively high levels of vitamin A although the turnover rate of the cholesterol remained unaffected. (5127).

In the rat kept on a diet containing adequate amounts of vitamin A it has been observed that an inverse relationship exists between the serum level and the liver levels of the vitamin. Under extreme hypovitamin A conditions, however, this relationship was found to be altered so that in the experimental animals deprived of vitamin A a parallelism between the blood and liver levels was found to exist

when the total liver content of vitamin A fell below 600 i. u. The work was carried out with Wistar strain of both male and female rats, the males weighing 175 to 225 grams, and the females 125 to 150 grams at the start of the study. Groups of animals were kept on a normal diet containing adequate amounts of the vitamin while another group was kept on a vitamin A free diet extending from 4 to 20 weeks. During this period animals were sacrificed and livers removed for analysis of vitamin A while blood samples for analysis of serum vitamin A were obtained by a cardiac puncture. The existence of the inverse relationship in normal animals is assumed by the author to be presumptive evidence that there is a regulatory mechanism controlling the vitamin A levels in the blood, at least in rats, which, under the conditions of either normal intake or moderate depletion of the vitamin A operates to maintain this inverse relationship. However, apparently the mechanism fails to function under conditions of extreme vitamin A depletion. In this study, too, the enhanced dependency of the male rat for vitamin A as compared with the female rat was shown by the fact that with regard to the liver levels of vitamin A the male animals were more depleted after four weeks of study than were the females after 20 weeks of the study. (4965).

It has been established that when rats are kept on a vitamin A free diet the store of the vitamin A in the liver is consumed at a regular rate and is essentially depleted within three weeks although levels of the vitamin in other tissues remain constant during this period.

With continued vitamin A dietary deprivation and zero vitamin A in the liver the level in the blood then begins to fall off and approaches zero within several days. It is during this period that the appearance of night blindness in these animals makes itself apparent, due to the loss by the visual pigments of their prosthetic group which is the vitamin A aldehyde. When vitamin A deprivation is maintained there appear general signs of tissue disintegration both in the eyes and elsewhere throughout the organism. (2276).

Vitamin A deficiency in pregnant rats is known to have serious consequences on the fetuses and on the offspring. It is known in these animals that when the pregnant females are kept on a vitamin A deficient diet the fetuses that are produced will, in general, not reach maturity and as a matter of fact will very often be resorbed. The sort of defects which vitamin A deficiency produces in the fetuses and the point in fetal development at which resorption begins to occur was established in a study in which 36 young females of the albino farms and Wistar strains were raised from weaning on a semi-purified diet containing very little vitamin A or carotene. This minimum level of vitamin A or carotene was necessary to ensure that the females would be able to mate and produce fetuses. Of the 36 females which reached maturity and were permitted to mate it was found that only 30 became pregnant and only 3 females carried their young to term, i. e. 22 days. In all other cases, when the mothers showed two out of three of the

following signs, they were sacrificed and the fetuses removed and examined. These signs were 25% or more of cornified cells in the vaginal smear during pregnancy; blood in the vaginal smear in excess of that which normally appears as a trace between the eleventh and fifteenth day of pregnancy; or a loss of weight by the mother particularly after the tenth day. In a great majority of these cases the intact fetuses which were obtained, especially after the fourteenth day of gestation, if resorption had not already begun to proceed, showed malformations of the eye, of the cardio-vascular system and of the genito-urinary tract. (9862).

A number of congenital malformations of the eyes were also found to be induced in the offspring of rats when the pregnant females suffered from vitamin A deficiency. In one set of experiments 20 female Sprague-Dawley rats were raised on a diet containing very small known amounts of carotene, but when they reached maturity the diet was altered to contain neither carotene nor vitamin A. The initial feeding regime which continued for three months, consisted of a diet which was supplemented every tenth day with 60 i. u. of vitamin D, and 25 micrograms of carotene in cottonseed oil. When these female animals were put on a vitamin free diet, they were bred with normal males but only a few of them carried their young to term. The three litters obtained by caesarean sections consisted of nineteen dead young all with abnormal eyes. The offspring were found to have such congenital defects as fusion of the cornea with the lids, absence of the iris, ciliary

body and anterior chamber. Also, connective tissue was found in place of the vitreous, coloboma of the retina and disorganization of the retinal structure was seen in the posterior parts of the eye (9653).

Work with vitamin A deficient pregnant females was repeated in a following series of experiments with the same results regarding the ocular malformations in the offspring. When serial histologic sections of the eyes of these newborn rats were studied they showed a fibrous retrolenticular membrane in place of the vitreous in every specimen examined. The lack of fusion of the lids was easily recognized in these animals and identified as an abnormality by their "open" eyes. When the maternal diet was supplemented with vitamin A during pregnancy the eyes of the young were normal. (9654).

One result of vitamin A deficiency in the female rat is the appearance of cornified tissue in the vagina, which tissue is histologically indistinguishable both from that occuring in the estrous rat or in the estrogen-treated rat. In a series of experiments involving 105 bilaterally ovariectomized Long-Evans rats it was found that topical application of vitamin A applied to the tissue by intravaginal instillation could counteract this keratinization whether arising from dietary deficiency of vitamin A or from estrogen administration. Both crystalline vitamin A alcohol and crystalline vitamin A acetate were effective in counteracting the keratinization the vehicle for both

being sesame oil. As judged by vaginal smear assay both retinol and retinyl acetate inhibit the estrogen-induced cornification with the relationship following a typical dose-response curve. For example, as low a total dose as 0.6 i.u. of vitamin A significantly inhibited the cornification resulting from a total dose of 0.6 i.u. of α-estradiole. (4486).

Even short term vitamin A deficiency may have a deleterious effect on certain organs of the rat, in particular the sex organs. One such study was carried out with male Wistar rats, 30 days of age, weighing about 100 grams. These were kept on a commercial rat diet, free of vitamin A, for five weeks, while a number of control animals received the same diet but supplemented with 12 i.u. of retinol per gram of feed. At the end of this time the vitamin A deficient animals on the average weighed some 20 grams less than the control animals and some showed initial signs of xerothalmia and lack of coordination. These animals were sacrificed and the testes were removed and examined for a number of biochemical components. The only differences found in the histological examination of the testes from the treated and untreated animals was in the much higher concentration of all lipid fractions except free cholesterol in the testes of the treated animals. It is hypothesized that the higher concentration of lipids result from lesions of the lipid layer of the cell membranes

due to the lack of vitamin A with a concomittant failure of these membranes to release lysozyme - bound proteolytic or lipolytic enzymes. (1330)

These lesions are directly associated with the lack of retinol in the diet of the animal. This was shown in experiments in which male rats were maintained on a diet containing retinoic acid but no retinol. The animals receiving retinoic acid were also found to have developed lesions in the reproductive tract which were characterized by sloughing of the germinal epitheleal cells of the testes and obliteration of the lumen of the tubules by Sertoli cells. Administration of retinol to these animals, which had been kept on a vitamin A-free diet for up to three weeks after weaning did not show degeneration of the germinal epithelium and normal testicular development proceeded, attesting to the regeneration of testicular tissue. In this work the retinoic acid was fed to the experimental animals in the form of the methyl ester at the level of $10\gamma$ per gram of animal. (4109)

Although retinoic acid does not fulfill the function of vitamin A with respect to testicular development or with respect to vision it was, until relatively recently, believed that most of the other functions of vitamin A could be carried forward in the living animal with retinoic acid. However, it has been found in experiments with female rats

receiving a diet containing only retinoic acid as the retinol substitute, that when pregnant, the earlier events in gestation can be maintained by retinoic acid but the later stages of pregnancy require the presence of retinol in the organism. If retinol is not present it has been found in these experiments that the fetuses were always resorbed and no litters were born although the mothers appeared outwardly healthy and prior to pregnancy had normal estrous cycles. The fetuses that were removed by caesarean section showed such abnormalities as a necrosis and slight polymorph infiltration around the periphery of the placental disc about the sixteenth day of pregnancy. It was found that this could be prevented by supplementation into the mother of retinol given as late as the tenth day and when this was done healthy litters resulted. In this work when male rats were fed retinoic acid but not retinol as in work previously discussed they developed small and often edematous testes. In these males the germinal epitheleum sloughed off and in some tubules the lumen was obliterated while in some others the lumen remained and in these some spermatocytes and spermatogonia were held "tenaciously" The seminal vesicles were smaller than in the controls given retinol and in male rats born with negligible stores of retinol and maintained thereafter on retinoic acid the testes remained infantile and spermatatids were never formed. When retinol was fed to these animals spermatogenesis was restored in degenerate testes and the normal development of the testes that had remained infantile was promoted. The supplemental feeding of retinol

also ensured the growth of the seminal vesicles in these animals and it was, therefore, concluded from this study that retinoic acid, while serving to maintain life, growth and general health, does not serve fully in reproduction. (9098).

These results have been confirmed by further studies with male and female vitamin A deficient rats, and in addition it was observed that the development of the testicular lesions in male rats was not prevented by injections of F. S. H. or testosterone propionate. In the case of the female rat suffering from vitamin A deficiency injections of esterone and progesterone alone or in combination did not prevent resorptions in pregnant females. However, small amounts of retinyl acetate prevented the development of reproductive lesions in both male and females. It seems unlikely, therefore, that the failure of retinoic acid to support normal reproduction in the rat can be explained in terms of its producing an endocrine insufficiency in these animals. (1878)

Similar work with female rats receiving retinoic acid as a substitute for retinol in the diet confirmed the fact that when the animals became pregnant they would always resorb their fetuses Again, the lesions resulting from this process in the reproductive tract are characterized by necrosis of cells in the placental labyrinth and the junctional zone, which usually occurs on the fifteenth or sixteenth day

of pregnancy in this study. The fetal surface of the placenta was then observed to become necrotic and the fetus begins to be resorbed. These lesions are very similar to those described in cases of orthodox vitamin A deficiency. (4110).

Similar results have been reported for female rats kept on a retinol free diet until they reached a weight of 200 grams at which point they were supplemented with 375 micrograms per week of all trans-retinoic acid given by medicine dropper. There was an improvement in the weight gains of these animals as well as restoration of the regular estrous cycles. In the pregnant animals, however, resorption or death of the fetuses was not prevented by feeding of the retinoic acid, either alone or in combination with 5 mg of progesterone per day given to the pregnant females from the day of conception. Late fetal death was inevitably preceded by haemorrhage of the labyrinth and necrosis of the junctional zone of the placenta. The main effect of feeding retinoic acid to the original retinol deficient animals was to promote the formation of chorioallantoic placentas and on postponement in the time of fetal resorption until approximately the sixteenth day of gestation. (1367).

Fetal rats taken from mothers fed a retinol deficient ration were found to suffer from a keratinizing metaplasia in epithelia of the

genito-urinary tract. This study was made on fourteen fetuses and newborns from as many litters in which the gestational age ranged from sixteen to twenty-two days. The earliest such metaplastic changes were seen in a fetus of eighteen days gestational age, and by the twentieth day keratinization was seen in the dorsal wall of all organs distal to the termination of the genital tracts. The epithelia in other parts of the body of the fetus were not affected. (9857).

Other malformations found throughout the genito-urinary tract of fetal rats removed from mothers maintained prior to and during pregnancy on retinol deficient diets included abnormalities of paraphsia exemplified by fused kidneys and an occasional instance of stenosis in ureters and homologeous genital ducts. Aplasias or anomalies characterized by failure of a structure to develop were represented by several instances of failure of male accessory glands to appear, particularly seminal vesicles and bulbourethral glands. In the female fetuses there was often a complete lack of vaginal development. Malformations of hypoplasia, those resulting from arrest or retardation of an embryonic process, were responsible for most of the abnormalities observed. These hypoplastic malformations included persistance of heterologous

genital ducts and retention of the urethral plate, while the aplastic malformations included positional abnormalities of the kidneys, ectopic ureteric openings, incomplete caudalward growth of Mullerian ducts, hypospadias, and failure of testicular descent. As a general rule, all malformed newborns and fetuses older than eighteen days gestational age exhibited keratinizing metaplasia in epithial tissue derived from the embryonic urogenital sinus. (9859).

Further consequences to fetal and newborn rats from mothers fed a vitamin A deficient diet prior to and during pregnancy included malformations in the heart and arteries derived from the aortic arch system. The heart was subject to two types of abnormality: the inter-ventricular septum failed to close in twenty-two out of sixty-four animals studied histologically, and the myocardium was retarded in development, highly trabeculated, and spongey in appearance in about thirty-two of the animals studied. (9860).

In a similar study, conducted with Wistar strain of pregnant rats it was concluded that at least 20 i. u. of retinol per day might be the necessary minimum dose for successful pregnancy in these animals.

When the pregnant rats were kept on a vitamin A deficient diet underdevelopment was found in the placenta during the period of early gestation and during the 14th to the 16th day of gestation degenerative changes and haemorrhage appeared in the decidua basalis and giant cell layer and extended into the labyrinth. Gestational changes in the anterior hypophysis and the adrenal cortex in these deficient animals were slight and retarded in comparison with normal animals. There was also noted an increase in the number of ovarian primordial and small follicles, and the growth of the corpus luteum gravidarum was also retarded in the vitamin A deficient animals. ( ? )

It has already been observed that female rats maintained on retinoic acid in addition to which a supplement of retinyl acetate is added will become sexually mature and deliver normal offspring. However, these offspring will in the first or second weeks of life show a number of signs associated with retinol deficiency. In this experiment female Sprague-Dawley weanling rats were fed on a diet deficient in vitamin A for 18 days after weaning, at the end of which time they were given 20 micrograms of retinoic acid contained in mineral oil each day. When the animals became sexually mature(about 5 weeks post weaning) they were mated with normal males. During pregnancy and lactation the retinoic acid supplement was increased to 50 micrograms per day and in addition, from the 9th through the 21st day of pregnancy, a 1 microgram supplement of retinyl acetate in cottonseed oil was given

orally. Since the offspring of these females developed growth and other vitamin A deficiencies in the first or second week of life it appears that the retinoic acid is not transported to the offspring through the mother's milk. When retinoic acid supplementation was started a few days after birth, by hand-feeding the acid to the young, they developed normally and those suffering the front leg crippling had a complete reversal of the condition. A further indication that retinoic acid was not entering the offspring along with the mother's milk was the fact that when the acid supplementation was started a few days after birth the offspring developed normally, but their growth would stop within four days whenever the supplement was removed from the diet, but was promptly resumed when the retinoic acid was again supplied to the diet of the offspring. (7777).

Further work has shown that the resorption of fetuses by pregnant rats which are fed a diet containing only retinoic acid can be prevented not only by feeding retinyl acetate to the pregnant animals but also by feeding retinyl methyl ether. This was established in an experiment with two female rats which were made pregnant with normal males after which, in addition to the normal diet they also received a daily oral dose of 20 micrograms of the retinyl methyl ether. The normal diet contained retinoic acid but no retinol. Both animals gave birth to litters as compared to pregnant control animals which

received only the retinoic acid as a consequence of which litters were not produced indicating total resorption of the fetuses. Thus, it was concluded that retinyl methyl ether could fill the specific role of retinol in preventing fetal absorptions in rats. Biological activity of retinyl methyl ether, at least with respect to reproduction, is apparently due to the fact that in vivo in rats it is readily converted to retinol. This was established by work with weanling male rats which were kpt on a retinol deficient diet for 150 days. For 29 days thereafter they were given a supplement of 800γ of crystalline retinyl methyl ether and then sacrificed for total removal of the livers. Analysis of the contents of the livers showed the presence both of retinyl methyl ether and of retinol. (9096).

The set of defects exhibited by fetuses removed from pregnant rats kept on a vitamin A deficient diet during pregnancy occur with sufficient regularity to be considered by some investigators as comprising a syndrome. These congenital defects are associated with the eye, the diaphragm, kidneys, ureters and genital tracts; and somewhat less frequently with the aortic arches, heart, lungs and lower genito-urinary tract. In order to establish when these defects appear in the fetuses, groups of vitamin A deficient pregnant rats were given a single oral dose of 16,000 i. u. on either the 10th, 11th, 12th, 13th, 14th or 15th day of gestation. The consequences to the fetus or to the newborn from

the administration at progressively earlier times during the pregnancy resulted in a progressive reduction in offspring affected by malformation. To a limited extent, the types of defects, and to a considerable extent, the relative percentage incidence of the various types, underwent change. An analysis of these observations led to the conclusion that the malformations resulting from material vitamin A deficiency were determined during the period of active organ formation rather than at an earlier period as has been established for certain other teratogenic agents. (9864).

Vitamin A deficient female rats will generally resorb fetuses and it has been observed that the substitution of retinoic acid for vitamin A will not prevent this fetal resorption. In hens, on the other hand, substitution of retinoic acid or methyl retinoate for vitamin A in the diet of these animals from the time they were baby chicks was found not to have this effect on the fertility of the animals, nor on the rate at which eggs were produced. However, embryonic development within the eggs ceased at the 48 hour stage and this was accompanied by the failure of blood vessels to form in the area vasculosa. These animals had been fed the retinoic acid or the methyl ester at a level of 3 micrograms per gram of feed, and although the birds became blind, other indices of health were not affected. These abnormalities in the development of the embryos in the eggs were attributed to the embryo suffering a deficiency of vitamin A since the eggs continued in normal development if the hens were given retinyl acetate in the feed in addition to the retinoic acid supplement. Hens, therefore, can convert retinyl

acetate to other retinyl esters, free retinol, and retinal; these substances are deposited in egg yolk and are thus readily accessible to the embryo. The embryos within the eggs were also stimulated to continued development past the 48 hour period when small amounts of retinyl acetate were injected directly into the yolk or into the albumen by penetration of the egg shell. Similar results with respect to the 48-hour stage at which embryonic development in the egg will cease in the absence of vitamin A or of the retinyl acetate were observed in the case of Japanese quail. (9103).

Male and female chickens, the male aged 7 months and the female aged 18 months, were fed from hatching diets deficient in retinol but supplemented with retinoic acid; the control birds were fed retinyl acetate. When the retinoic acid supplement was withdrawn the birds developed signs of vitamin A deficiency. These deficient birds, together with the controls, were killed and examined at intervals throughout an 18-day period of the experiment. It was observed that the behavior of the vitamin A deficient birds already abnormal by the third day of the experiment, a degree of incorporation was seen after the sixth day, and by the tenth day the weight of the deficient birds was significantly lower than that of the controls. Those animals sacrificed after the third day of the experiment showed changes in nasal epith ileum and in the periosteum lining the cranial cavity and vertebral canal.

Those animals sacrificed after six days showed new spicules of bone being formed in the same area, while animals sacrificed by the tenth day showed compression of the central nervous system, and nerve fiber degeneration was found well underway. It is believed that the central nervous system compression is related to the increased deposition of the periosteal bone. (4116).

Further work by these authors established some of the biological activities which could be carried on in the domestic fowl by retinoic acid as well as certain effects of vitamin A deficiency on the chick embryo. Thus, groups of male and female chickens were reared from hatching on vitamin A free diets, one group on a diet unsupplemented with vitamin A or its derivatives, a second group on a diet containing retinoic acid, a third group received methyl retinoate and a fourth group received retinyl acetate, all at a level of 3 micrograms per gram of diet. Those animals receiving an unsupplemented diet died before four weeks of age, after developing typical signs of avitaminosis-A, while those birds given retinyl acetate grew well and had a normal appearance. The birds receiving retinoic acid or methyl retinoate while showing no overt signs of vitamin A deficiency did show a progressive failure of vision, and although minimum histological changes were found in their retinas, their vision was rapidly restored after feeding with the retinyl acetate supplement.

Male chickens receiving retinoic acid or methyl retinoate have normal testes and the hens receiving one or the other of these materials laid eggs at a normal rate. However, although their eggs could be obtained fertile, the development of the embryo became abnormal after two days of incubation and always died. Occasionally these embryos could be stimulated to further development and even saved by the injection of various forms of vitamin A at the 500 or 250 microgram level directly into the egg. before incubation, or by previous administration to the hen of 50 micrograms up to 1 mg. of retinyl acetate administered orally. It was also found that when injected directly into the egg, retinoic acid was extremely toxic, much more so than the methyl retinoate derivatives. (9102)

The effect on the growing chick, both of vitamin A deficiency with regard to the central nervous system changes, and vitamin A excesses with respect to skeletal abnormalities, is the same as has been observed and described for mammals. Thus, vitamin A deficient chicks show a prompt depression of endochondral bone growth, while the growth of soft tissues, including the central nervous system, continues. It was concluded from studies of these animals that were made vitamin A deficient that neither in the chick nor mammals is vitamin A essential to the growth of the central nervous system. Similarly, it was shown that vitamin A deficiencies in the duck are similar in all respects and all

regards to that observed in the vitamin A deficient chicken and in the vitamin A deficient mammals. Thus, the vistamin A deficiency in young ducks results, also, in prompt retardation and supression of epitheleal cartilage cell sequences concerned in endochondral bone growth which affect results in a disproportionate growth of the axial skeleton and central nervous system, both of which continue to grow. The result is compression of the growing central nervous system demonstrable by the occurrence of distortions of brain and spinal cord and multiple herniae cerebra into sinuses and veins of the dura and pia arachnoid at the sites of arachnoidal villi. (9959, 9957, 9961).

In the case of young ducks, however, the pathologic changes observed in the vitamin A deficient animals are found primarily in the nerve cells of the spinal cord and the spinal root ganglia. These changes "are characterized by pyknosis and complete degeneration of the nerve cells in the spinal root ganglia and in both the anterior and posterior horns of the spinal cord." (7683).

The pyknotic changes reported in spinal cord and vertebral ganglia of the duckling were also found in the brains of vitamin A deficient chicks. In this study, the vitamin A deficiency changes of the central nervous system did not include any evidence of compression of the brain, increased cerebral spinal fluid pressure or bony overgrowth of the skull and vertebral column. The authors suggest that the

probable explanation for this disagreement may be found "in the difference in time required to produce deficiency symptoms in different laboratories. The chicks in our study required less than 3 weeks to develop symptoms and undoubtedly were acutely deficient. This would be too short a time for a severe overgrowth of bone to take place." A more interesting finding reported by these authors was the fact that when their day-old chicks were fed purified diets containing 4 - 25% of stripped lard and diets made deficient only in vitamin E, many chicks with encephalomalacia were found by chemical analyses to be simultaneously deficient in vitamin A. As a matter of fact when this interaction was recognized special precautions were taken to assure an adequate intake of vitamin A by the chicks kept on a vitamin-E-free diet. The animals suffering from a vitamin A deficiency because of the vitamin E deficiency were found to have many small acellular areas that were always found in the frontal lobes and occasionally in all parts of the brain. (1750).

Even sub-acute hypervitaminosis A, insufficient to produce signs of neurological disturbance in the chick, is yet sufficient to cause a rise in the pressure of the cerebral spinal fluid of the vitamin A deficient animals. Thus, chicks kept on a low carotene diet containing 1.6 ppm of carotene per day, but no other source of vitamin A, suffered a rise in the cerebral spinal fluid pressure of 1.03 mm of

water per day. This rise in the spinal fluid pressure, which was followed for 150 days, occurred in these animals whether or not they were born from eggs laid by mothers themselves fed a carotene-deficient diet or fed a normal diet, although in the production of this rise in the cerebral spinal fluid pressure it appears that a maternal deficiency of sufficient severity is as effective as a deficiency in the diet after hatching. (1013)

As noted above, (9957), many of the reproductive and teratological defects associated with vitamin A deficiency in the chick are also found in mammals other than the rat. Thus, as was already discussed earlier for the rat, vitamin A deficiency can be a serious condition for the pregnant animal as far as the offspring are concerned. Thus, there was observed among four herds of pigs that a number of the youngsters died shortly after birth or, if they survived, were blind. It was concluded that the cause in each case was a maternal deficiency in vitamin A. This was concluded as a result of histories of the feedings, the diet, and by liver analysis of the offsprings. The dams in all instances appeared normal. (3304).

The defects in the offspring due to vitamin A deficiency during the period of pregnancy of the dam are similar to what was described for the rat offspring or rat embryos produced by vitamin A deficient mothers. Thus, in one series of experiments, 42 piglets were born blind out of four litters which showed other such defects as cleft palate, cleft lip, and accessory ears. (3587)

Vitamin A was shown to have a progestational action when introduced into the lumen of the oviduct of the toad (Bufo arenarum). A preparation of vitamin A (Gaveol) was used in one oviduct of the toad while the second oviduct was injected with an inert liquid. Twenty-four hours later the animals were sacrificed and the oviducts examined. Those which had received 800 to 20, 000 i. u. of the vitamin A showed evidence of abnormal gelateneous secretion. The control oviduct which contained an inert liquid usually showed only congestion. Castration or hypophysectomy either together or singly did not prevent the production of oviduct secretion by vitamin A. It appeared, therefore, that the progestational action of vitamin A does not require the presence of functioning ovaries or hypophysis although the oviduct must be functional in order to respond. ( ? )

In the case of the human, although direct evidence is lacking, many of the anomalies found in fetal and newborn rats from vitamin A deficient mothers closely simulate malformations observed or postulated in man. This is particularly so for cardiac and aortic arch anomalies in the rat offspring. It is not suggested that the experiments on rats whereby maternal dietary deficiency of vitamin A results in congenital malformations of the heart and the great vessels are simulations of the human condition during the mother's pregnancy, and these authors do not suggest that dietary deficiency of the mother

is an important cause of congenital cardiac malformations. However, they suggest that nutritional disturbance of the fetus may be induced and as a matter of fact are known to be induced by factors other than maternal dietary deficiency. Thus, maternal disease, maternal metabolic imbalance or anomalies of the embryonic membrane or placenta have been proposed as conditions which may interrupt the normal nutrition of the embryo and thus may, conceivably, result in anomalous development. It is by this less direct mechanism by which malformations may be brought about in the human embryo through interference with its normal metabolism. (9863).

Environmental accidents apparently can also result in mal-metabolism of vitamin A producing affects associated with a vitamin A deficient condition. Thus, because of an outbreak of coal tar poisoning it was necessary to slaughter chronically affected pigs. It appeared that the increase in the still birth rate was related to low liver levels of vitamin A and from this it was suggested that coal tar derivatives can interfere with the absorption of vitamin A by the sow, with a resulting low cross-placental passage of the vitamin to the piglets. (5612).

Environmental accidents other than those brought about by man also can affect the vitamin A metabolism of animals, in this case cattle herds. Vitamin A deficiency of cattle in Columbia, South America,

associated with a particular dry season in the year 1944, resulted in these animals suffering from corneal ulcers and opacity, lacrimation, photophobia and conjunctivitis. In addition this was also sometimes complicated by skin disturbances and prolonged gestation. Within 14 days after vitamin therapy was started on some of the animals, recovery from the skin condition keratitis was achieved as compared to 32 days required for those animals which were placed on green pasture but were not administered additional vitamin A. The vitamin A preparation given to the first group of animals was by injection. ( ? ).

The vitamin A status is not only important for the female, especially during its period of pregnancy, but it is an important substance as far as the health of the male reproductive organs is concerned. In the case of the boar degenerative changes in spermatogenic tissue was found to be directly associated with or caused by avitaminosis-A. Thus, direct application of vitamin A alcohol or vitamin A aldehyde to the tissue (but not vitamin A acid) was found to counteract these degenerative changes. (6992).

An incipient state of vitamin A deficiency arising from feeding female rabbits a ration containing no detectable carotene resulted after mating in significant changes in the numbers of fetal resorptions and other abnormalities in those fetuses examined. Out of 42 vitamin A-deficient female rabbits (of the Dutch and New Zealand White breeds)

there was a 14% reduction in the number mating and of these 82. 4% conceived as compared to 89. 1% for the controls, but the number of corpora lutea did not differ. The greatest decrease in viable young was due to resorption and absorption in late gestation so that only 26. 4% of the corpora lutea were represented by normal fetuses at 28 days post-coitum in the deficient animals as compared to 74. 6% in the controls. Many of the fetuses exhibited occular abnormalities in those carotene deficient rabbits as well as changes in the fetal placenta involving a mottled appearance suggestive of decreased vascularity. (5136).

The length of time on which female rabbits are kept on a vitamin A deficient diet prior to mating has an affect on the percentage of abnormal offspring produced. Thus, it was found that 82 out of 142 young born from 31 litters to those rabbits kept on a vitamin A deficient diet (12 to 18 weeks before mating) were hydrocephalic. In addition, the longer the deficiency in the diet the higher was the proportion of hydrocephalics. Of the non-hydrocephalic young, seven were found to have increased cerebral spinal fluid pressures. (6179).

In further work with young rabbits suffering from hydrocephalus known to be due to maternal hypovitaminosis A the administration of vitamin A to these young animals led to a rapid fall in the cerebral spinal fluid pressure, the fall generally continuing until normal limits for the pressure had been reached. (6180).

Mapping of the consequences of vitamin A deficiency in animals as in man has gone on for many years, and although much attention has been focused on the reproductive and teratological results associated with vitamin A deficiency, much interesting and potentially useful information has been accumulated regarding other affects on the organism due to the existence of a low vitamin A or a completely deficient vitamin A diet.

The comparison was made of the effects of vitamin A on the nucleic acid content of various organs in rats, which levels were compared to those in animals kept on a vitamin A free diet. The vitamin A treated animals received 1500 i. u. orally per day. In the vitamin fed animals the kidneys, adrenal glands, duodenum and diaphragm showed statistically significant higher concentrations of D.N. A. and a level of serum proteins which was some 9% higher than in the control animals which were deficient in vitamin A. From these results the authors of this work suggest that vitamin A affects the metabolism of nucleic acids by inhibiting their decomposition probably too by promoting their biosynthesis. (6935).

However, other work with the rat showed that the RNA and protein concentrations in the small intestine remained unaffected by the vitamin A deficiency and no differences were found in polyribosome stability, or in the protein synthesizing activity of the free polyribosomes from the mucosa. In these vitamin A deficient rats a marked decrease was

found in the number of goblet cells in the small intestine but no no other morphological changes were found by the electron microscopic study of the region. However, it was found that rough endoplasmic reticulum showed a decrease in the uptake of carbon-14 labeled L-leucine into protein (somewhat less than 1/2 of the normal level). It would appear, therefore, that protein synthesis by membrane-bound but not by free polyribosomes of the intestinal mucosa is depressed under conditions of vitamin A deficiency in these animals. The authors suggest that this might mean that vitamin A is involved directly or indirectly in protein synthesis at the translational level. (10372, 10373).

"It seems as though different tissues have different thresholds for vitamin A action, the tissue with the lowest being the epithelium lining of the gastro-intestinal tract. In the presence of local levels of vitamin A its basal cells produce mucus-secreting (goblet) cells; in the absence of vitamin A, these cells degenerate. The next highest threshold is the columnar epithelium of the trachea which changes to a stratified squamus type of tissue in vitamin A deficiency." (10372). Thus, when the tracheal mucosa is traumatized, for example by curattage, regeneration of the tracheal epithelium proceeds somewhat differently in the vitamin A deficient rat as compared to the normal animals. In the case of the normal animal after shallow curettage of the tracheal mucosa haemorrhage and clotting take place over the curetted area. A thin layer of epithelium spreads inwards under the

clot and a curetted area, for example 2 mm wide, is covered in 36 to 48 hours with the new epithelium then becoming stratified and finally differentiating into ciliated low columnar epithelium. The entire process is complete in 10 to 14 daus after the curettage. When curettage is performed on vitamin A deficient animals the pattern and rate of epithelial regeneration of the metaplastic squamus epithelium is similar to that of cilated columnar epithelium in normal rats. Curetted areas 2 mm wide are epithelialized in 48 hours. After epithelialization the new epithelium in vitamin A deficient rats differentiates into squamus epithelium in six to eight days but takes 12 to 14 days to differentiate into ciliated epithelium in normal rats. These authors observed that this is not surprising since ciliated epithelium with its goblet cells is much more highly specialised. (9789).

It appears that vitamin A deficiency in rats has no affect on the 3 - amino acid in blood serum, in testes, and in the submaxiliary gland of the animals. The only difference observed between normal and avitaminosis A animals was the somewhat higher threonine concentration in normal livers as compared to the vitamin A deficient livers and a somewhat increased concentration of phenylalanine and tyrosine in vitamin A deficient testes. (9)

While vitamin A may not be directly involved with the level of 3-amino acids in the organism it appears to be involved with the

production of certain amino acids which are bound to certain tissues. Thus, in a study with male and female rats of the Wistar strain one group was given 1γ of vitamin A daily as part of the diet, a second group was given 100γ daily as part of the diet. Analytical results showed that the skin of rats receiving the smaller dose of the vitamin A contained less cistene than that of rats receiving the higher dose of vitamin A. The authors suggest, therefore, that vitamin A may be involved in the metabolism of cysteine and may, therefore, have an effect on the resistance of epithelium. (433).

It has also been reported that in the muscle and skin of vitamin A deficient rats ascorbic acid and glutathion contents were decreased, while in the liver, kidney and adrenal of these animals the glutathion was increased but the ascorbic acid was decreased. Furthermore, not only was the cysteine of the skin markedly decreased, but the cysteine of the rat skin was also markedly decreased in the vitamin A deficient animals. Finally, the chondroitin or mucoitan sulfate of costal cartilage, cranial bone, long bones, skin and tail of these animals was also reduced which is known to be characteristic of the hypovitaminosis A condition. ( ? )

The vitamin A deficient rat exhibits an abnormal metabolism of acetate and a reduced gluconeogenesis. The former appears to be due to malfunction of the adrenal cortex and, more specifically to an interruption

of the adrenal glucochorticoid hormone - (chorticone sperone) - biosynthesis in the vitamin A deficient animal. The latter abnormality is due to a degeneration of mucus membranes which arises because of the requirement for vitamin A in mucopolysaccharide biosynthesis. This process requires the incorporation of sulfate and glucose into mucopolysaccharide which is dependent both on the presence of vitamin A and on an enzyme which drives the reaction forward. ( ? )

There is observed, further, a severe depression of glucose biosynthesis from triose in the intact vitamin A deficient rat which, however, was not found in liver homogenates prepared from the vitamin A deficient animals, nor was oxidative phosphorilation affected in the liver homogenates. It seems likely, according to these authors, therefore, that it must be or has been hypothesized that the process of glucose biosynthesis in intact animal is associated with the presence of a circulating hormone. (9968).

In vitro studies using rat colon segments and rat colon homogenates showed that the level of incorporation of sulfate and glucose into mucopolysaccharide is reduced by about one half in those animals which have been rendered vitamin A deficient. Addition of vitamin A, vitamin A aldehyde, and vitamin A acid but no other fat soluble vitamin to the homogenates restored the level of this incorporation to normal. Substituting uridine diphosphate acetylglucosamine, uridine diphosphate glucuronic acid, uridine diphosphate glucose and acetylglucosamine instead of glucose and glucamine, the incorporation of sulfate was still

found to be dependent on the presence of vitamin A. This observation suggests that the vitamin may be required either in the polymerization reactions of the uridine derivatives or the activation or transfer of sulfate. It was also shown in this work that the incorporation of sulfate and glucose into mucopolysaccharides can be lowered or abolished when the vitamin A destroying enzyme lipoxydase is present. (9969).

Striking gross and microscopic changes occured in the incisor teeth and molar teeth of rats maintained on a mild chronic vitamin A deficient diet for periods of up to one year. "There occurred progressively a loss of pigmentation and of translucency, twisting of the teeth, both transverse and longitudinal ridging of the teeth, exposure of the pulps, and constrictions, and eventual exfoliation of the erupted portion of the tooth. The older animals developed large odontonas." These were characterized by an embryonic type of pulp -connected tissue with inclusion of odontobolasts, epithelial cells, carotene and newly formed tooth geminal centers. Other gross abnormalities found included bladder and renal calculi, subcutaneous abscesses, infection of upper respiratory tract and ears, and mucopurulent plugs in trachea. Histologically, the changes in the tissues consisted of incomplete metaplasia of the epithielial cells, and an associated infection. (1307).

It is suggested that epidermal tissue has the highest threshold for vitamin A action. This tissue, even under normal vitamin A sufficient conditions, synthesizes carotene but increases this production during deficiency. (10269). As a result, although avitaminosis A in rats produced certain dermal conditions, it was found to have no apparent affect on the resistance of rat skin to experimentally produced infection with streptococci and staphylococci. (8736). On the other hand, mild chronic vitamin A deficiency produced and maintained in rats for a year resulted in a progressive increase in the number of bacteria on the mucus membranes and tissues so that at the end of the year the findings were indistinguishable from those of acute vitamin A deficient rats. As a result of the increase, especially in colonies of staphylococous aureus and Ps. fluorescens, a supperative lesion chiefly in the sinuses and middle ear was quite evident. (1308).

In the rat, retinol appears not to be the necessary form of vitamin A as far as the animal's visual acuity is concerned, Thus, visual acuity in this species can be achieved in the absence of retinol if the animal is fed vitamin $A_2$. This was concluded from an investigation whereby male albino rats were depleted of retinol although they were given sufficient retinoic acid to maintain normal growth and general tissue functions. After 14 weeks of receiving the vitamin A deficient diet, leading to severe depletion of their vitamin A reserves, the animals

were then put on a diet containing vitamin $A_2$ which was continued for three weeks. At the end of that period normal retinol histology and electro-retinographic thresholds were restored. (10083).

Vitamin A appears to be involved in subtle behavior characteristics of the rat. For example, it was found in rats that vitamin A deficiency resulted in a change in the animal's normal preference for sodium chloride and for quinine solutions. Depletion of vitamin A acids or retinol resulted in a loss in the normal preference for sodium chloride and an aversion to quinine solutions. Repletion with either the acid or the alcohol form of the vitamin resulted in the taste preferences returning to normal. It is interesting to note that vitamin A acid can provide the vitamin A required for normal taste as contrasted with its inability to maintain visual functions. Histological examination showed carotene infiltrating the pores of the taste buds while the accessory glandular tissues were atrophied and debris filled the trenches of the papillae. (774).

There appears to be an important synergistic interaction between vitamin A and vitamin E at least with respect to maintaining normal erythrocyte structure in the rat. The erythrocyte was examined by electron microscopy in an attempt to establish whether different levels of vitamin A and vitamin E did, indeed have an affect. The vitamin A was administered in the form of retinyl acetate and vitamin E in the form of D. L. - a-tocopherol. The diet was continued for three

weeks after which blood samples were taken from the tails of the rats and prepared for electron microscopy. Red blood cells from animals receiving no vitamin A but high levels of vitamin E (17.5 mg) were severely distorted whereas red blood cells from pair-fed controls receiving normal levels of vitamin A (120γ) plus high levels of vitamin E (17.5 mg) were less distorted. Red blood cells in rats receiving no vitamin A but normal levels of vitamin E (1.75 mg) also appeared distorted. Red blood cells from rats receiving a sub-normal level of vitamin E but no vitamin A and rats receiving a sub-normal level of vitamin E and a normal level of vitamin A were only slightly distorted. Therefore, it was concluded by these authors that in the presence of dietary retinol dietary vitamin E administered in normal or in high doses produces anomalies in the structure of the rat erythrocyte which can be counteracted with normal doses of vitamin A included in the diet. (205).

The uptake of sulfate and phosphate particularly by femurs and tibiae of retinol deficient rats is less than that of normal rats of the same age. As a result of this, the concentration of inorganic sulfate rises in the serum of the vitamin-deficient animals. When vitamin A is administered the concentration in the serum decreases to normal levels and leads to a decrease in the skeletal uptake of these materials. Using labeled sulphur it was found that the activity of the sulfate diminishes particularly in the chondoitin sulfate

complexes which can be isolated from the skeletons, and this activity progressively decreases as the deficiency continues. Administration of retinol to these animals results in a reversal of this effect i. e. the specific activity increases and even exceeds the values found from samples from ekeletons of normal rats of the same age. Administration of vitamin A to the vitamin-deficient animals also resulted in a substantial increase in the specific activity of labeled sulfate in the sulfo-muco-polysaccharides isolated in skins of rats. In general, there is an increase in sulphur-containing material in those regions of active calcification. (2401).

The general conclusion that vitamin A is important in the production of muco-polysaccharides is indicated by the observation that in severe vitamin A deficiencies generally less muco-polysaccharides are formed and secreting epithelia undergo keratinization. (3078).

Similarly, in an in vitro study of amino acid metabolism associated with vitamin A deficiency liver, kidney and heart homogenates of rats were studied for their glutamic-aspartic transaminase activity. No difference between normal and vitamin A deficient animals was found with respect to this parameter. (10).

As was observed in the case of fowl a deficiency in vitamin A has an affect on the central nervous system of other animals, for example pigs, cattle and sheep. In the case of pigs, which were made deficient in vitamin A there was observed an increase in cerebral spinal

fluid pressure reaching values as high as 220 mm as compared to the values in the normal animal ranging from 80 to 145 mm with an average of 109 mm. (8617).

Vitamin A deficient calves also showing this increased spinal fluid pressure when fed carotene as part of the diet, showed a decrease in their spinal fluid pressure as well as a decrease in the degree of diarrhea, muscular incoordination, and convulsive seizures, all these being symptoms of vitamin A deficiency in these animals. However, certain histo-pathological changes associated with the initial vitamin A deficiency remained unchanged by treatment with either carotene or the vitamin. Thus, the inter-lobular ducts and main duct of the parotid gland and the inter-lobular ducts of the sub-maxiliary gland, continued to exhibit squamus metaplasia. It was also found in these animals that when they were fed carotene suspended in 9% of Tween 80, those receiving the carotene by intravenous injection had higher blood levels of plasma carotene and vitamin A and higher liver and lung concentrations of carotene as compared to those animals receiving the same level of carotene orally. (2314).

The dura-mater was found to suffer changes in some of its biochemical constituents when calves were fed a vitamin A depleted diet. During a 16-week experimental period, groups of male Holstein calves

were fed diets containing either 4, 12, 36 or 108 micrograms of vitamin A per kilogram of live weight per day. Those animals receiving the two lower levels of vitamin A showed increased spinal fluid pressure, which was inversely proportional to the vitamin A intake. Biochemical analysis of the excised dura mater at the end of the experimental period showed an increase of the uronic acid content of those calves receiving the 4 and 12 microgram doses, which, again, was inversely related to the vitamin A intake level. In all the experimental animals, although the D. N. A. content remained unchanged, those animals receiving the two lower vitamin A levels in their diet had a greater total R. N. A. and a greater ratio of R. N. A. to D. N. A. than those receiving the higher level. (1849).

The fine structural differences in the parotid duct epithileum of calves was compared for those receiving an adequate supplement of vitamin A in the diet and those deficient in vitamin A. The control animals had two morphologic cell types, mucoid and fibrous. "The mucoid cell was characterized by cisternal profiles of granular reticulum extensive Golgi membranes, and dense aggregates of intra-cytoplasmic mucin. " In the deficient animals, mucoid cells seldom were seen to have developed, and fibrous cells predominated without evidence of keratinization. Furthermore, there was a reduced prominence of Golgi complexes in the deficient epithileal cells which,the authors observed, is of interest in light of the evidence that this organelle has been shown

to be involved in sulfate polysaccharide synthesis which synthesis is depressed in the intestinal mucosa of vitamin A deficient rats. However, "since vitamin A is not required for the formation of mucopolysaccharides by fibroblasts grown in tissue culture, it would appear that vitamin A does not affect mucopolysaccharide synthesis per se, but is required by the relatively undifferentiated basal cell of the parotid duct or intestine if this cell is to attain the stage (protein synthesis, membrane formation) at which mucus synthesis can proceed." (3762).

The earliest symptoms in calves which are kept on a vitamin A deficient diet appear to be night blindness and diarrhea. This occurs when the blood plasma vitamin A level falls below 10 - 12 micrograms per 100 ml. When the vitamin A levels fall to less than 8 micrograms per 100 ml. these animals were found to suffer convulsions and when the levels were decreased to less than 5 micrograms per 100 ml. the animals were found to be in "very poor condition, corresponding to extreme deficient status." Avitaminosis A, particularly in young calves, lowers their resistance to infection and predisposes them to respiratory, gastro-intestinal and urinary tract ailments. However, xerophthalmia was observed only in those vitamin A deficient animals which had secondary infection of the eyes. (9397).

The consequences of vitamin A deficiency in sheep, specifically wethers, was investigated with respect to renal function

parameters which might be affected by this nutritional condition. It was found that the control animals excreted only one half as much urine as the vitamin A deficient animals although both received the same amount of water. The increased urine output was accompanied by a lower osmolality and specific gravity with a marked elevation of inorganic phosphate and a corresponding decline in calcium. The mechanism for concentrating urine in the deficient animals, however, was not affected, since when feed and water were witheld from the control and experimental groups they were both capable of concentrating urine. The increased inorganic phosphate excretion and decreased calcium excretion in the vitamin A deficient animals suggests to these authors that there may be alterations in bone metabolism associated with the vitamin A deficiency condition. (9676).

The presence of vitamin A, while necessary for the conversion of sulfate and glucose into mucopolysaccharides requires also the presence of a set of mucopolysaccharide-synthesizing enzymes. This group of enzymes was shown to be present in pig mucosa and the material extracted by acid precipitation was shown to contain about 50% of the vitamin A content of the whole pig mucosa. (9972).

Some of these enzymes may, in fact, have been identified from studies carried out with homogenized rat liver tissue. Those homogenates prepared from vitamin A deficient animals showed a decrease in the activity of the enzymes sulfurylase, -3 β-hydroxi-steroid dehydrogenase and L-gulono γ lacto-oxidase. However,

there appears to be no evidence from studies specifically conducted to establish the point, that for these three enzymes vitamin A might function as a co-enzyme or as an inducer. In fact, these roles are not associated at all with the vitamin. (7778).

Guinea-pigs appear to be particularly sensitive to deprivation of vitamin A, at least with regard to the interaction between the vitamin and the level of blood cholesterol. As a matter of fact, in an experimental study to establish this point, those animals deprived of vitamin A died within 4 to 5 weeks. Examination of their blood cholesterol levels showed that it had remained within normal limits which, for these animals, ranged from 350 to 420 mg per cent. In another group of guinea pigs receiving a moderate dose of the vitamin with their diet (in the form of 0.25 mm Amunine per day) an increase in the blood cholesterol level was shown reaching values from 490 to 600 mg per cent. A third group of animals receiving heavy doses of this vitamin preparation i.e. 1 cc. of Amunine per day, which was continued for four to five weeks, died of cachexia, with haemorrhagic lesions and their blood cholesterol levels were found to have decreased to mere traces. ( ? )

It is well known that animals kept on a vitamin A free diet develop a variety of visual defects in particular xerophthalmia. In the case of

dogs it was observed that when vitamin A free diets were continued for 20 days the xerophthalmia that developed was characterized by an increase in the sodium chloride level of the tears, suggesting that a concentration process was developing which might be capable of permanently damaging the epithileum. (9347). The kind of tissue damage which can result to the eye as a consequence of vitamin A deprivation, was studied in rabbits which were maintained on various supplemented and non-supplemented vitamin A aldehyde diets. None of the control rabbits maintained on a vitamin A deficient diet but supplemented with vitamin A palmitate were found to have developed fundus lesions, while the rabbits kept on diets not supplemented, or supplemented with vitamin A acid, did develope irreversible fundus lesions which were first observed after the passage of 9-1/2 to 13-1/2 months. The lesion started with typical xerosis of the conjunctiva and cornea and progressed with an indefinite breaking up of the reddish background followed six to eight weeks later by the appearance of white dots in the fundus. The liver of control rabbits and rabbits on vitamin A deficient diets, but supplemented with vitamin A acid, contained no vitamin A and the livers of rabbits on the vitamin A deficienct diets but supplemented with the palmitate derivative, contained about 70 mg. of vitamin A. These authors conclude that vitamin A acid apparently has no place in the cyclic series of reactions involved in the synthesis and bleaching of the visual pigment and cannot substitute

as a source of vitamin A since the body of these animals demonstrates no reversal of the oxidation of retinine. (8623).

Several different derivatives of retinol were found to exhibit biological activity in the rat. For example, retro-vitamin A, which is a break-down product of retinol, (occasionally observed in samples stored in containers), was fed to vitamin A deficient rats for three days. The rats were then sacrificed after the last dose and the livers saponified and the saponified material extracted with di-ethyl ether and chromatographed by T. L. C.. In all of the ten cases examined, both vitamin A and retro-vitamin A were identified in the chromatograms, indicating that retro-vitamin A can be converted to vitamin A and is, in fact, converted to vitamin A by the deficient animals. (9384).

Another vitamin A derivative, anhydro-vitamin A, also can function biologically. When this derivative was fed to vitamin A deficient rats and its metabolites isolated from the livers and examined as before by chromatography, none of the materials found were identified as identical with retro-vitamin A as prepared chemically from vitamin A. Neither anhydro-vitamin A nor its derivatives gave rise to any detectable amount of vitamin A in the liver, nor was anhydro-vitamin A itself present as such, in the liver. Thus, it appears that anhydro-vitamin A whether fed orally or injected subcutaneously, is not absorbed and stored by the rat, but since it is known that anhydro-vitamin A has growth-

promoting activity, it must be that one or more of its derivatives formed in vivo is responsible for this effect. (9387).

The ubiquitous role apparently played by vitamin A in many aspects of tissue metabolism may be responsible for the observation that rabbits deprived of vitamin A in their diet had spleens which were much smaller than those of normal animals. On the other hand, in rabbits given the same basic diet plus large doses of vitamin A the spleens were found to be larger than in normal animals. ( ? )

Similarly, but particularly through its involvement in some instances with metabolic processes occurring at the DNA/RNA level, one might expect that mutagenic or carcinogenic effects would be associated with the presence or absence of vitamin A. From work with hamsters, 45 days of age, fed on a variety of diets including vitamin A deficient diets, it appears that malignant tumors were produced in larger numbers in those animals fed from a vitamin A deficient diet than in those animals fed on a diet which was similar but supplemented with vitamin A. The incidence of tumors was even greater in those hamsters fed the vitamin A deficient diet as compared to hamsters supplemented with vitamin A but whose caloric intake was restricted to that of the vitamin A deficient group. The tumors were induced by the application of the carcinogen 7, 12-dimethyl 1, 2-benzanthracene in liquid petrolatum which was topically

applied to the left buccal cheek pouch in the case of each animal except for the control group which received topical application only of the liquid petrolatum base. These authors conclude from their data that a deficiency of vitamin A in the hamster (in this instance the Golden Syrian strain) may promote malignant changes in the epithileum of the cheek pouch when a carcinogen is applied. (7866).

In the human, most of the consequences of vitamin A deficiency are associated with either skin conditions or visual deficiencies. In children, for example, one sign of vitamin A deficiency is the appearance of skin lesions consisting of horny papules formed by carototic plugs projecting from hair follicles. It is reported in this 1940 paper describing the treatment given to nine children suffering from this condition, that marked improvement occurred within two to four months as a result of administering daily to each child a dosage of 100, 000 to 300, 000 i. u. of vitamin A in the form of oleum percomorphum. (5297).

Other skin diseases or skin conditions associated with a vitamin A deficiency in the diet of the human include phrynoderma ("toad skin"), characterized by dry, pigmented papules and also certain kinds of acne-like lesions. Such skin lesions very often precede night blindness as an early indication of vitamin A deficiency. (244).

Both types of these dermatoses generally respond well to treatment with vitamin A which, in the case histories described by these authors,

consists of 16, 000 to 25, 000 i. u. of the vitamin daily, usually in the form of a fish-oil concentrate continuing for up to eight or ten weeks. ( ? ).

There also appears to be a definite relationship between vitamin A deficiency and the appearance of oral leukoplakia in the human. In an investigation involving double blind testing, some patients suffering from leukoplakia received a placebo, other patients with leukoplakia received vitamin A. In those receiving the vitamin A supplementation, but not in those receiving the placebo, it was found that a reduction in size, favorable qualitative change in the lesion, and histological evidence of improvement had occurred in a substantial sample of the leukoplakic patients. This study involved 37 patients, roughly half of whom received the placebo, the other half were instructed to take a total of 8 capsules of 50, 000 i. u. of vitamin A per capsule, or a total of 400, 000 i. u. per day. The treatment period continued for 21 days. (4367).

Among other features of vitamin A deficiency in the human are such manifestations as cornified vaginal epithileum, retarded mental and physical growth, increased cerebral spinal fluid pressure, seventh cranial nerve injury, and gynecomastia in addition to the above-noted skin and occular defects. The author of this paper notes that nerve injury and gynecomastia are conditions found in animals but rarely, if ever, found in man and associated with a vitamin A deficiency.

Although it is unusual for all of these symptoms to occur at the same time in the same individual there are cases such as the one reported here where this does occur and when it does, it seems to be mainly in very young infants. This five and a half month old white female infant suffered from all of the above-noted conditions until she was given an intra-muscular injection of 100, 000 i. u. of vitamin A daily for three days, and thereafter maintained on a multi-vitamin preparation. With this course of treatment, after nine days the xerophthalmia cleared completely, and the gynecomastia which was manifested by enlarged breasts had diminished in size and the liver and spleen which had been enlarged had returned to normal size. Follow up examinations two and a half months after the beginning of the vitamin A therapy "revealed a bright, healthy, alert well-developed baby who has shown a marked increase in growth, with no evidence of physical or mental retardation." (1830).

Humans experiencing a prolonged period of low level vitamin A intake as part of their normal diet, apparently show a number of blood parameters which are sufficiently different from that found in the blood of normal subjects to be characterized as a vitamin A deficiency symptom. This study was conducted on the blood of 157 individuals, and the blood was examined for a number of characteristic changes associated with vitamin A deficiency. This group consisted of 84 school children, 28 college students and 45 adult women. For various reasons, these

individuals had been living on vitamin A restricted diets for periods which varied from a few months to many years, and in the case of the children for practically their entire lives. From a study of the diet of the children and students it was evident to these investigators that the deficiency was due, in the main, to the continued use of foods low in vitamin A, such foods being rice, grits, biscuit, corn meal, and pork. Foods such as eggs, milk, butter and green and yellow vegetables were taken in by these subjects sparingly or only occasionally. Physical examination of these human subjects showed that the general symptoms of deficiency were, upon the whole, similar. "Individual histories revealed that in all cases loss of vigor, nervousness, and general weakness were the first noticeable symptoms while the more specific ones included dry hair and skin, brittle nails, and eye defects.

The children had lost the alertness of health and were listless and inattentive; but conjunctivitis was the most outstanding defect in this group. In a few cases the eye condition had progressed so far that there was an actual involvement of the cornea and the conjuctiva appeared flaky." Also, the skin of the children had become dry and desquamated, the hair was dry and had lost its normal gloss, and appeared bleached and lifeless. Many of the children had no sub-cutaneous fat so that even the skin on the face was shriveled and dry. In the women and students the external symptoms were less clearly defined but both groups

had eye defects which varied in the different subjects from drowsiness and burning and redness of the lids to well defined conjunctivitis. Nearly all of the adults had some skin defects and these were particularly noticeable in the women where they appeared as desquamated areas under the chin, on the side of the neck, and across the chest.

The plan of this study was to make differential white cell counts on the blood of these individuals and if the blood picture was found to be similar to that of rats fed a vitamin A deficient diet, and further, if, upon the administration of vitamin A the blood picture became normal, the differential count would then become of diagnostic value in detecting varying degrees of vitamin A deficiency, in man. The blood changes that were found in these individuals included a mild leucopenia, a decrease in the polymorphonuclear neutrophils, a relative increase in large lymphocytes with a corresponding drop in small lymphocytes, the occurrence of degenerate cells, and an increase in the number of juvenile cells. The authors of this study concluded that this blood picture was similar to that produced in rat blood when the animals were fed diets deficient in vitamin A. Therefore, the original goal of the investigation to determine whether the differential blood count would be diagnostic for vitamin A deficiency in man was established. It was further found that these blood changes are reversible by the administration of large amounts of vitamin A over a period of several weeks. (2)

There are several pathologic conditions in man which would seem to result from vitamin A deficiency but which, on further investigation, have been found not to have this direct causal relation. For example, conjunctival thickening appears not to be a vitamin A deficient condition. This was established by administering to adult human subjects suffering from conjunctival elevations 50, 000 i. u. of vitamin A per day for a period of two years. Such treatment, however, had no effect in reducing the condition. (7716). Similarly, "it has been demonstrated that the requirements for vitamins A, B, and C are increased during hyperthyroidism and if these increased requirements are not met a relative deficiency of the vitamins will ensue, which may produce changes previously ascribed to an effect of hyperthyroidism per se. Whereas the administration of the necessary vitamins will correct these changes, it should not imply an anti-thyrogenic action unless such an effect is demonstrated by further experiments. Conversely, if a vitamin will antagonise certain effects of thyroid feeding it does not follow that a deficiency of the vitamin alone will increase thyroid activity." (2305).

As has already been observed, vitamin A deficiency is well known to result in an impaired growth rate and any general inhibition of growth mau be reflected in a decreased bone formation rate. In the vitamin A deficient animal, particularly the rat, this decreased bone formation rate

is associated with a decrease in the uptake of sulfate and phosphate and a decrease in the synthesis rate of chondroiton sulfate. More recent investigations have shown that in the vitamin A deficient rat there is a decrease in the calcium and hydroxy probing content of the bone as compared with the normal animals, and although a depression of the bone formation rate observed during vitamin A deficiency does not necessarily indicate a specific affect of vitamin A upon bone these authors strongly suggest that vitamin A may play an important role in regulating mucopolysaccharide, collagen, and mineral metabolism in bone. (2758).

Hypovitaminosis is very common in old age among humans. It derives from various causes such as malnutrition, or mal-absorption of nutritive materials including mineral salts in consequence of mucosal atrophy of the alimentary tract. In particular, the frequency of skeletal abnormalities direct attention in these elderly patients to problems of calcium and phosphorus metabolism. A study was done with eight elderly patients showing marked hypocalcaemia who were administered 3,000 i. u. of vitamin A daily for a month in order to ascertain whether vitamin A alone without any vitamin D in the diet could have any influence on the serum calcium level. This treatment continued for a month but in none of the cases did normalization of the calcium level occur. The experiment was then modified by administering

to seven of these patients 9,000 i. u. of vitamin A per day for a period of two weeks. Of these seven patients, five were hypocalcaemic and two were normal calcaemic. After the two week period, the level of calcium in the hypocalcaemic patients reached normal levels while the two normal calcaemic patients showed essentially no change in their calcium level. These authors observed that on the basis of these results one can conclude that vitamin A given in doses of at least 9,000 i. u. per day to aged patients is capable of restoring the normal calcium blood level in conditions where hypocalcaemia is present. They further observed that this is probably due to the stimulating effect of such massive doses of vitamin A on the "biologic functions of the intestinal mucosa including absorption of calcium." (9394)

A condition of vitamin A deficiency in the sexually mature female rat not only has consequences on the offspring when these rats are mated and deliver, but already in the first ten to one hundred hours of pregnancy after mating histological changes in the endometrium can be detected. In this study, female rats which had delivered at least one litter prior to the onset of the experiment, were brought to a hypovitaminotic A condition and then mated. When sperm was found in the vaginal smears these animals were sacrificed within 10 to 100 hours after the onset of ovulation, and histological examination of the horns of the uterus were performed. In the vitamin A deficient animals, the strong leukocyte infiltration and the large number of sites of inflammation

were particularly noticeable, while no thickening of the epithileum was observed. Alkaline phosphatase reaction was noticeably more intense than in the control animals while the reaction for acid phosphatase and BPNH-diaphorase was very weak. (8797).

Vitamin A has been shown to play a role in total steroid production of rat adrenal glands and possibly also plays a role in the biosynthesis of cholesterol. Thus, in vitamin A deficient animals there is not only a cholesterol biosynthesis block, but also a marked decrease in the ability of the adrenal glands to synthesize cortical sterone from cholesterol. The fact that vitamin A deficiency affects both these processes independently is shown in in vitro studies with homogenates of the adrenal glands whereby the addition of vitamin A alcohol and vitamin A acid increased, at least partially, the synthesis of cortical sterone. (9354).

The lesions to the nervous system due to vitamin A deficiency are related to the rate of growth during which the deficiency operates rather the age age at which this occurs. Thus, such lesions can be brought about in very young animals or in older animals during resumption of growth after the older animals have been stunted from an early age by a generally inadequate diet. Apparently, these lesions result from the fact that in a vitamin A deficient organism while the nervous system continues to develop normally, there is general growth retardation of the cranial cavity and spinal cord with

the result that there is an overcrowding in these two areas. In effect, the nervous sytem becomes too large for its bony envelopment.

In white rats the gross manifestations are "overcrowding of the cranial cavity shown by distortions of the brain, dislocation toward the foramen magnum and multiple herniations of cerebrum and cerebellum at sites of arachnoidal villi into the venous sinuses of the dura. In the spinal area, there is overcrowding of the spinal canal with dislocation of the spinal cord and herniations of nerve roots into intervertebral foramina and into bodies of vertebrae in consequence of pressure." (9950).

An investigation was undertaken in an attempt to correlate plasma levels of vitamin A with uterine lesions in the rat, these lesions resulting from the use of estrogen as the etiological agent to bring about uterine stratified squamus metaplasia, also known as keratinizing metaplasia. It appears that these uterine metaplastic lesions which developed in estrogen treated rats, are not the result of a generalized hypo-vitaminosis A since the plasma levels of vitamin A remain unaltered in those animals treated with the estrogen. It is known that estrogen per se can cause uterine keratinizing metaplasia but these lesions appear to occur more frequently in vitamin A deficient estrogenized rats which show decreased plasma vitamin A levels as compared with rats having normal vitamin A intake. (7619)

"In further studies on the incidence of uterine stratified squamus metaplasia studies were made of intact and ovariectomized rats fed diets lacking vitamin A or lacking vitamins A and E. In those animals lacking ovaries as well these lesions did not occur., even when they were maintained on a very low vitamin A diet for 22 weeks and despite reaching low plasma levels of vitamin A. The intact animals fed on low vitamin A or low vitamin A and E diets all showed the uterine lesions which were morphologically identical and of similar extent in both groups of animals, but tended to occur earlier in those rats missing combined vitamins A and E. As a result of these studies it is hypothesized endometrial lesions due to vitamin A deficiency originate as multiple foci in the glandular and lumenal epithilea. "(7620).

It was further observed that moderate doses of vitamin A given simultaneously with the estrogen suppressed the incidence of these uterine lesions, these moderate doses being on the order of 250 i. u. per week. This level seemed to be as effective as larger levels of the vitamin but very large doses of the order of 100, 000 i. u. of vitamin A per week were found to give little protection against the effects of the estrogen treatment. ( ? )

# VITAMIN A

## Bibliography


(1) Aarne, P. 1953. Uber die Halbarkeit von Lebertranpraparaten. Semina (Helsinki): 37:237-240.

* (2) Abbott, O. D. ; et. al. 1939. Effort of avitaminosis A on the human blood picture. Am. J. Physio. 126(2):245-260.

(3) Abbott, O. D. and C. F. Ahmann. 1938. The effect of avitaminosis A on the blood picture of albino rats. Am. J. Physiol. 122(3): 589-595.

(4) Abboud, I. ; et. al. 1968. Vitamin A and chalazia. Exp. Eye Res. 7(3): 383-387.

(5) Abboud, I. A. ; et. al. 1968. Vitamin A and xerosis. Exp. Eye Res. 7(3): 388-393.

(6) Abdallah, M. M. and M. K. Salah. 1961. The relation between vitamin A content in livers and the feeding habitat of fishes in the Red Sea. J. Pharm. Sci. United Arab Rep. 2(1): 135-138.

(7) Abderhalden, E. 1939. Vitamin A - Significance of deficiency and resulting night blindness in air raid precautions. Schweiz. med. Wchnschr. 69: 1005-1006.

(8) Abdullah, M. M. ; et. al. 1954. Vitamin $A_2$ content in some Nile fishes. Biochem J. 56:569-571.

* (9) Abdulnabi, M. and J. G. Bieri. 1953. Amino acid metabolism in vitamin deficiency: I. Free amino acids in tissues of normal and deficient rats. Texas Repts. Biol. and Med. 11(2): 181-195.

* (10) Abdulnabi, M. and J. G. Bieri. 1953. Amino acid metabolism in vitamin deficiency. II. The glutamic-aspartic transaminase activity in tissues from normal and defiecient rats. Texas Reps. Biol. and Med. 11(2): 196-199.

(11) Abdurakhmanov, M. K. 1968. Seasonal fluctuations in the level of vitamins A, $B_1$, $B_2$ and C in the milk of healthy pregnant women in southerm Tadzhikistan. Vop. Pitan. 27(5): 89-90.

(12) Abdurakhmanov, M. K. 1969. Dynamics of the levels of vitamins A, D, $B_1$, $B_2$, $B_6$ and C in blood and their urinary excretion in pregnant women. Vop. Okhr. Materin Det. 14(5): 91-92.

(13) Abe, Y and T. I. Hara. 1953. The stability of fish-liver oil. IV. The relation between vitamin A destruction and peroxide formation in olein, linolein, and linolenin. Bull. Japan. Soc. Sci. Fisheries. 19:95-98.

(14) Abelin, I. 1933. Relations between carotene and thyroxine. Ztschr. f. physiol. Chem. 217:109-114.

(15) Abelin, I. ;et al. 1930. Ernahrung und Schilddrusenwirkung. II. Mitt. Uber die Bedeutung der Vitamine fur den Verlauf der experimentellen Hyperthyreose. Biochem. Ztr. 228:189-210.

(16) Abelin, I. 1935. Antagonism of Vitamin A and thyroxine. Z. Vitaminforsch. 4:120-128.

(17) Abelin, I. 1954. Role of nutrition in experimental hyperthyroidism. Intern. Z. Vitaminforsch. 25:302-303.

(18) Abelin, I. and A. Schonenberger. 1933. Analyse der Dijodtyrosin - und Diatwirkung bei der experimentellen Hyperthyreose. Z.ges. exp. Med. 90:489-501.

(19) Abelin, I. and G. Giordanengo. 1936. Thyreotoxikose und Diat. Z. ges. exp. Med. 99:681-688.

(20) Abelin, I. 1936. Vit. A in hyperthyroidism. Schweiz. med. Wchnschr. 66:1106-1107.

(21) Abels, J. C. ;et al. 1941. Metabolic studies in patients with gastrointestinal cancer. III. The hepatic concentrations of vitamin A. Proc. Soc. Exptl. Biol. Med. 48:488-492.

(22) Abels, J. C. ;et al. 1941. Metabolic studies in patients with cancer of the gastro-intestinal tract. I. Plasma vitamin A levels in patients with malignant neoplastic disease, particularly of the gastro-intestinal tract. J. Clin. Invest. 20(6):749-764.

(23) Abels, J. C. ;et al. 1942. Hepatic vitamin A in the rat as affected by the administration of dibenzanthracene. J. Exptl. Med. 76:143-161.

(24) Abels, J. C. ;et al. 1943. Metabolic abnormalities in patients with cancer of the gastrointestinal tract; a review of recent studies. Arch. Surgery. 46(6):849-860.

(25) Abels, H. ; 1922. Uber die Wichtigkeit der Vitamine fur die Entwicklung des menschlichen fotalen und mutterlichen Organismus. Wien Wchschr. 1: 1785-1787.

(26) Abels, H. 1927. Clinical manifestations of deficiency:age and sex factors. Wien. klin. Wchnschr. 40:1105-1107.

(27) Aberle, S. B. D. 1933. Continual cornified vaginal cells as an index of avitaminosis in rats. J. Nutr. 6:1-10.

(28) Aberle, S. B. D. 1934. Neurological disturbances in rats reared on diets deficient in Vitamin A. J. Nutrition. 7(4):445 - 461.

(29) Aberle, S. B. D. 1933. The interrelation of a gonotropic hormone and vitamin A. Amer. J. Physiol. 106(2):267-272.

(30) Abinzano, C. ; et al. 1962. Action of vitamin A in the oviduct of the toad. Semana Med. (Buenos Aires) 121:1078-1079.

(31) Abramovich, A. ;et al. 1967. Ectopic maxillofacial chondrogenesis in the rat fetus treated with high doses of vitamin A. Rev. Asoc. Odont. Argent. 55:237-242.

(32) Abramovich, A. and F. C. H. Devoto. 1967. Congenital maxillary-facial lesions obtained with various doses of vitamin A. Rev. Soc. Argent. Biol. 43: 121-128.

(33) Abramovich, A. ;et al. 1967. Comparison between palatal fissures produced by hypervitaminosis A and lathyrism. Rev. Soc. Argent. Biol. 43:94-101.

(34) Abramovich, A. 1969. Comparison between palatal fissures induced by hypervitaminosis A and Lathyrus odoratus. C. R. Soc. Biol. (Paris).162:1853-1854

(35) Abramovich, A. ;et al. 1969. Congenital maxillo-facial lesions induced by different doses of vitamin A. C. R. Soc. Biol. (Paris). 162:2011-2012

(36) Abrams, J. T. ;et al. 1969. The retinol status and voluntary food consumption of the calf on a vitamin A-free diet. Int. Z. Vitaminforsch. 39:416-425.

(37) Abrams, R. G. ;et al. 1967. The effect of teratogens upon the serum proteins of rats. J. Oral Ther. 3:422-438.

(38) Abramson, E. and H. Olgaard. 1939. Prevalence of dysadaptation in public elementary schools for children at Djursholm (relation to hypovitaminosis. ). Skandinav. Arch. f. Physiol. 82:49-60.

(39) Abrarov, A. A. and K. R. Dzhumaniyazova. 1969. Effect of vitamins A, D, and E on the acid, peroxide, and osmotic resistance of erythrocytes. Vop. Pitan. 28(1):82-83

(40) Abrarov, A. A. and S. Z. Isamukhamedov. 1969. Effect of vitamins A and E on some indicators in normal erythrocytes and in hemolytic (Phenylhydrazine) anemia. Med. Zh. Uzb. 11:50-53.

(41) Abt, A. F. ;et al. 1942. Studies on plasma vitamin A. I. Determ. of the vitamin A and carotene content of blood plasma for clinical and nutrition studies. II. Relationship of the plasma vitamin A to pregnancy and anemia in syphilitic patients. Quart. Bull. Northwestern Univ. Med. Sch. 16(4):241-253.

(42) Abul-Fadl, M. A. M et al. 1950. Vitamin A content of gamoose butter fat, and its variation with the method of preparation of "Samna". J. Roy. Egypt. Med. Assoc. 33:521-526.

(43) Accoyer, P. and S. Ribaud. 1967. Constituents of algae in Vichy mineral waters. Ann. Inst. Hydrol. Climatol. 36:98-99.

(44) Acevedo, A. B. ;et al. 1947. Vitamin A and liver function; experimental and clinical study. Rev. clin. espan. 27:251-258.

(45) Acharya, B. N. and B. G. Malpoorwala. 1952. Carotenoids. I. Carotene content of greens. J. Univ. Bombay. Sect. A. 21 (3):47-52.

(46) Achaya, K. T. and T. P. Hilditch. 1950. Component glycerides of cow and buffalo milk fats with reference to the possible mechanism of their production during lactation. Proc. Roy. Soc. (London). B137:187-211.

(47) Ackert, J. E. 1932. Fowl resistance to parasitism affected by vitamins A and B. Arch. Zool. Italiano. 16(3/4):1369-1379.

(48) Ackert, J. E. and L. O. Nolf. 1931. Uber den Einflu$\beta$ von Vitamin B auf den Widerstand von Huhnchen gegen Parasiten. Am. J. Hyg. 13: 337-344.

(49) Acosta, B. H. 1951. Nutritional study of Genipterus maculatus (cusk eels) meat. Anales fac. farm. y bioquim., Univ. nacl. mayor San Marcos (Lima, Peru) 2:276-281.

(50) Adair, F. L. ;et al. 1943. The effect of complementing the diet in pregnancy with calcium, phosphorus, iron, and vitamins A and D. Am. J. Obstet. Gynecol. 46:116-121.

(51) Adam, A. and H. Gutheil. 1955. Vitamin A enriched milk in feeding of nurslings. Ztschr. Kinderh. 76:462-475.

(52) Adam, A. and H. Gutheil. 1955. Vitamin A balance in infants. Z. Kinderheilk. 77:462-475.

(53) Adam, A. and H. Gutheil. 1955. Vitamin A Bilanzversuche bei Sauglingen. Milchwissenschaft. 10:190-195.

(54) Adam, W. and W. Nikolowski. 1955. Fluctuations of serum vitamin A content at various times of day with and without vitamin A loading. Arch, Klin. u. exper. Dermat. 201:255-259.

(55) Adam, W. and W. Nikolowski. 1955. Vitamin-A-Therapie und 17-Ketosteroidausscheidung. Arch. Klin. exp. Dermatol. 201:141-145.

(56) Adam, W. and W. F. Korner. 1968. Investigations on the resorption of vitamins A and E. Int. Z. Vitaminforsch. 38(2):160-168.

(57) Adamek, J. M. 1958. Behandlung von Leukosis bei Kucken mit einem Gemisch. Can. P. 558 134.

(58) Adamesteanu, C. ;et al. 1968. A-avitaminosis in cattle and poultry. Inst. Agron. Dr. Petru Groza Cluj Lucr Stiint Ser Med Bet Zooteh. 23/24:79-87.

(59) Adams, A. W. ;et al. 1969. Some effects on turkeys of nitrate in the drinking water. Poult. Sci. 48(4):1222-1229.

(60) Adams, C. R. and J. C. Bauernfeind. 1963. A review of vitamin A nutrition of ruminants. In:55th Ann. Nat'l. Mtg. of the A. S. A. S. Jour. Animal Sci. 22(3):830-831.

(61) Adams, J. F. ;et al. 1960. Vitamin A deficiency following total gastrectomy. Lancet. 1:415-417.

(62) Adams, G. ;et al. 1925. Cod-liver oil as a source of vitamin A. Proc. Iowa Acad. Sci. 32:321-322.

(63) Adamson, D. C. M. ;et al. 1951. The precision of the 3-point correction method of spectrophotometric assay of Vitamin A. Analyst. 76: 445-448.

(64) Adamson, G. L. and A. T. Cameron. 1929. Preoperative treatment of Graves'disease by combination of iodized fatty acid and vitamins A and D(vitiodum). Bull. med. de Quebec. 30:1-18.

(65) Adamson, G. L. and A. T. Cameron. 1928. Pre-operative treatment of Graves' disease by combination of iodized fatty acid and vitamins A and D (vitiodum). Can. M. A. J. 19:420-426.

(66) Adamstone, F. B. 1947. Histologic comparison of the brains of vitamin A-deficient and vitamin E-deficient chicks. Arch. Path. 43(3): 301-312.

(67) Adhikari, H. R. ;et al. 1968. Vitamin A metabolism in protein deficiency. Ind. J. Biochem. 5(3):132-137.

(68) Adlersberg, D. 1959. Primary malabsorption syndrome-past, present and future. Am. J. Digest Dis. 4(1): 8-18.

(69) Adlersberg, D. 1944. Fat and Vitamin A absorption in sprue. N. Y. State J. Med. 44(6):606-610.

(70) Adlersberg, D. ;et al. 1948. Vitamin A metabolism in liver disease. II. Effect of bile acids and lecithin. Gastroenterology. 10:822-830.

(71) Adlersberg, D. ;et al. 1945. Effect of liver disease on vitamin A metabolism. Gastroenterol. 4(2): 164-174.

(72) Adlersberg, D. and H. Sobotka. 1943. Fat and Vitamin A absorption in sprue and jejuno-ileitis. Gastroenterol. 1:357-365.

(73) Adlersberg, D. and H. Sobotka. 1943. Influence of lecithin feeding on fat and Vitamin A absorption in man. J. Nutr. 25(3): 255-263.

(74) Adlersberg, D. et. al. 1957. Disturbances in protein and lipide metabolism in malabsorption syndrome. J. Mt. Sinai Hosp. N. Y. 24:206-219.

(75) Adolph, W. H. 1954. Nutrition in the Near East. J. Am. Dietetic Association 30(8):753-756.

(76) Aenlle, E. O. 1943. Studies on some oils of marine animals. Notas y Resumenes Inst. Espanol. Oceanogr. (Madrid). 115:1-86.

(77) Agarwal, L. P. and H. N. Adhaulla. 1954. Vitamin A-Role in healing corneal ulcers. Am. J. Opth. 38:810-816.

(78) Agarwal, L. P. and H. N. Adhaulia. 1954. Role in healing of corneal ulcers. Opthalmologica. 128:6-14.

(79) Agarwal, M. S. 1950. Vitamine und ihr Wert. Ind Med. Rec. 70:101-104.

(80) Agawa, T. ; et. al. 1952. Action of supersonics on liver oils J. Chem. Soc. Jap. Ins. Chem. Sect. 55:399-400.

(81) Agawa, T. ; et. al. 1953. The liver oil of a cod, Lotella Phycis. Yushi Kagaku Kyokaishi-J. Oil Chemist's Soc. , Japan 2:246-249.

(82) Agrawal, D. K. ;et. al. 1969. Mung chuni (Phaseolus mungo) as a substitute for yellow maize. I. Effect on growth. Ind. Vet. J. 46(10): 899-903.

(83) Agrawal, J. P. and S. N. Singh. 1960. Effect of heat processing on the carotene and vitamin A content of milk. Balwant Vidapeeth. 2(1):26-36.

(84) Agduhr. E. 1935. Studies on the influence of some natural fats and their components on animal tissue structures. II The influence on some organic structures of different components of cod liver oil. With a chemical chapter by G. Blix znd B. Vahlquist. Upsala Lakareforenings Forhandl. 40(3/4):183-387.

(85) Ageeva, S. N. 1964. Preliminary experimental results of a study on anti tumoral action of sarcolysis and Vitamin A. In-Problems of Cancer Control. Vilnius. 193.

(86) Agnoli, R. and L. Untersteiner. 1936; Vitamin A and B contents of lentil, oat and soy flour. Quaderni nutriz. 3:44-48.

(87) Agopian, L. A. 1926. Vitamin preparations. Ger. P. 486, 228.

(88) Agopian, L. A. 1923. Gewinnung von Vitaminen. E. P. 193 831.

(89) Ahluwalia, B. ;et al. 1970. Effect of exogenous hormones on the male reproductive organs of vitamin A-deficient rats. J. Nutr. 100:715-724.

(90) Ahluwalia, B. ;et al. 1971. Local stimulatory effect of vitamin A on spermatogenesis in the rat. J. Nutr. 101:141-151.

(91) Ahmad, B. 1931. Weitere Beobachtungen uber die Beziehung von Carotin zu Vitamin A. J. Soc. Chem. Ind. 50:12-14.

(92) Ahmad, B. 1935. Beobachtungen uber den Vitamin A-Gehalt von Heilbuttlebertran. Ind. Med. Gaz. 70:70-71.

(93) Ahmad, B. 1934. Der Carotinstoffwechsel und die mogliche Beziehung des Reticulo-endothelialen Systems dazu. Current Sci. 2:477-478.

(94) Ahmad, B. 1931. The fate of carotene after absorption in the animal organism. Biochem. J. 25(4):1195-1204.

(95) Ahmad, B. ;et al. 1945. Vitamin A content of the liver oils of common fresh-water fishes of the Punjab. Ind. J. Med. Res. 33:215-218.

(96) Ahmad, B. 1946. The Vitamin A content of buffalo butterfat (ghee). Effect of method of preparation, storage, and cooking. Ind. J. Med. Res. 34:75-85.

(97) Ahmad, B. and P. K. Seshan. 1941. Vitamin and carotene reserves in human livers. Ind. Med. Gaz. 76:156-157.

(98) Ahmad, B. ;et al. 1937. The carotene content of some common Bengali foodstuffs. Ind. J. Med. Res. 24:801-806.

(99) Ahmad, B. and J. C. Drummond. 1930. Relative vitamin A value of the body and liver oils of certain fish. Biochem. J. 24:27-36.

(100) Airan, J. W. ;et al. 1950. Studies in Kolhapur freshwater fishes. II. Maral (Ophicephalus leucopunctatus) and shivada (Wallagonia attu). Ind. J. Med. Res. 38(3):259-262.

(101) Aiyar, A. S. and A. Sreenivisan. 1961. Intracellular distribution of ubiquinone in rat liver under certain stress conditions. Nature. 190:344.

(102) Aizinbudas, L. ;et al. 1966. Changes in the cystine content of the epidermal formations of farm animals during certain nutritional disorders. Sb. Dokl. Vses. Konf., 3rd, Moscow. 1965(2):3-7.

(103) Ajans, Z. A. ;et al. 1965. Influence of vitamin A on human colostrum and early milk. Am. J. Clin. Nutr. 17(3):139-142.

(104) Ajisaka, M. ;et al. 1942. Changes in vitamin A, $B_1$, $B_2$, and C content of vegetables and fruit during storage. J. Biochem. (Japan). 35: 271-279.

(105) Ajmera, R. L. 1968. Metabolism of vitamin A in certain liver, kidney, and pulmonary diseases. Curr. Med. Pract. 12(9):669-672.

(106) Akhundov, D. M. 1958. Content of some vitamins in buffalo milk. Doklady Vsesoyuz. Konf, po Moloch. Delu (Moscow). 1958:247-250.

(107) Alam, N. A. ;et al. 1970. Effect of the hypocholesterolemic drug, AY9944, on the absorption of retinol in the rat. Int. Z. Vitaminforsch. 40:291-298.

(108) Albano, V. and E. Maranelli. 1949. Biologic determination in cheese. Boll. Soc. ital. biol. sper. 17:150.

(109) Albano, O. ;et al. 1966. Study of intestinal absorption of Vitamin A in patients with heart diseases. Minerva Gastroent. 12:132-135.

(110) Albonico, F. ;et al. 1964. Ripening of cheese. Riv. Latte, 20(3):1-38

(111) Alcozer, G. 1953. Vitamins and creatine metabolism. II. Changes of the creatine and phosphocreatine content of the skeleton and heart muscles of guinea pigs after administration of vitamins A, D, and K. Arch. "E. Maragliano"patol. e. Clin. 8:381-389.

(112) Aldor, T. 1963. Untersuchungen uber das Verhalten von. Lebensmitteln im Hochfrequenz-Feld. (Mikrowellenbereich). Z. Lebensmittel-Unters. u. Forsch. 123:189-195.

(113) Aleksandrov, V. N. 1960. Vitamin A intake in arctic conditions. Sb. Nauchn. Rabot Arkhang. Nauchn.-Issled. Inst. Epidemiol. Mikrobiol. i Gigieny. 4:89-92.

(114) Aleksandrov, V. N. 1963. On the evaluation of the vitamin A content of the body by luminescent microscopy of liver sections. Vop. Pitan. 22:79-81.

(115) Aleksandrov, V. N. 1963. Assessment of vitamin A supply by fluorescent microscopy of liver slices. Vop. Pitan. 23 (3):79-81

(116) Alekseeva, T. I. 1970. Improvement in the method of obtaining vitamin A by means of moderate alkaline hydrolysis. Rybnoe Khozyaistvo. 46(5):67-68.

(117) Alexander, J. and T. W. Goodwin. 1950. Demonstration of conversion of carotene into vitamin A in conscious rats. Brit. J. Nutr. 4:421-423.

(118) Alexander, B. ;et al. 1947. The effect of ingested mineral oil on plasma carotene and vitamin A. Proc. Soc. Exptl. Biol. and Med. 65(2):275-278.

(119) Alexandrow, W. N. 1963. Beurteilung der Versorgung des Organismus mit Vitamin A durch Lumineszenzmikroskopie der Leberschnitte. Vopr. Pitanija. 22(3): 79-81.

(120) Alfieri, R. ;et al. 1966. Experimentelle Retinose beim Kaninchen durch Natriumjodat; Parallele zwischen den Veranderungen des Elektroretinogramms und dem Vitamin-A-Gehalt des Blutes. C. R. Seances Soc, Biol. Filiales. 160:993-994.

(121) Al-Hasami, S. M. 1968. Vitamin A activity of β-apo-carotenals in Coturnix coturnix japonica. J. Nutr. 94(3):402-406.

(122) Ali, M. 1932. Der Vitamingehalt getrockneter Feigen und Datteln. Arch. Hygiene. 107:219-233.

(123) Ali, S. A. and L. Rahman. 1962. A new method for refining shark liver oil on a commercial scale and recovery of vitamin A by partial saponification for production of standard quality as well as higher vitamin A potency oil. Indo-Pacific Fish, Counc. Proc. 9(2):113-114.

(124) Ali, M. A. ;et al. 1970. Distribution of vitamins A1 and A2 in the retinas of some marine fishes from the Gulf of California. Vision Res. 10: 1307-1310.

(125) Ali, S. M. ;et al. 1958. Studies on shark liver oil. I. Physico-chemical constants and vitamin "A" content of liver oil from sharks of the Karachi coast. Pakistan J. Sci. and Ind. Res. 1(1):70-72.

(126) Alifax, R. 1969. Influence of the unsaponifiable fraction on the stability of butter. Protection of butter by ascorbic acid. Annales de Technologie Agricole. 18(3):167-185.

(127) Allan, J. C. 1959. Vitamin-A tolerance curves in baboons (Papio ursinus) before and after pancreatectomy. S. African J. Med. Sci. 24:87-88.

(128) Allan, J. 1958. The relation between serum vitamin A levels and liver stores in the baboon (Papio ursinus). S. Afr. J. Med. Sci. 23:280.

(129) Allan, J. C. 1958. The effect of domestication on the vitamin A content of the liver in the baboon (Papio Ursinus). S. Afr. J. Med. Sci. 23:273-274.

(130) Allen, D. H. ;et al. 1956. Infantile cortical hyperostosis; 2 cases with review of points of differential diagnosis from hypervitaminosis A. Am. J. Roentgenol. 76:576-582.

(131) Allen, R. S. ;et al. 1955. Use of activated glycerol dichlorohydrin for estimating vitamin A in dairy calf blood plasma. Iowa State Coll. J. Sci. 29(4):721-734.

(132) Allen, R. S. and N. L. Jacobson. 1954. Effect of massive dosage of vitamin A on the blood plasma fat and vitamin A levels in dairy calves. Proc. Iowa Acad. Sci. 61:205-209.

(133) Allen, R. S. ;et al. 1951. Effect of iodinated casein and thiouracil on the concentrations of carotenoids and vitamin A in the blood plasma of young dairy animals. Proc. Iowa Acad. Sci. 58:235-243.

(134) Allen, N. N. ;et al. 1948. Colostrum milk for calf feeding. I. Stored colostrum as a substitute for marketable milk for feeding dairy calves (Allen). II. The effect of cold storage on the vitamin A and carotene content of colostrum milk. (Dickey &Foote). Bull. Vermont Agric. Expt. Sta. 544. 2 fig.

(135) Allen, R. S. ;et al. 1949. Occurrence in blood plasma from certain dairy calves of factors that interfere with the color reactions of activated glycerol dichlorohydrin with vitamin A and carotenoids. J. Dairy. Sci. 32(7):688-694.

(136) Allende , F. P. and F. Menchaca. 1948. Bilateral congenital microphthalmia in infant (pseudoanophthalmos) probably due to vitamin A deficiency in mother. Arch. oftal. Buenos Aires. 23:360-371.

(137) Allison, A. C. and M. R. Young. 1964. Uptake of dyes and drugs by living cells in culture. Life Sci. 3(12):1407-1414.

(138) Almeda, A. F. 1958. Improved milk. Span. 243, 371.

(139) Almquist, H. J. and E. Mecchi. 1939. Die Vitamin-A-Bedurfnisse legender Huhner. Poultry Sci. 16:129-137.

(140) Almquist, H. J. ;et al. 1943. The diet of hens and the vitamin A potency of their eggs. J. Biol. Chem. 150(1):99-105.

(141) Almquist, H. J. 1954. A fallacy in the analysis of nutritional-requirement data. Arch. Biochem. Biophys. 50:503.

(142) Almquist, H. J. 1953. Evaluation of vitamin-requirement data. Poultry Sci. 32:122-128.

(143) Almquist, H. J. and S. Maurer. 1955. The effect of antibiotic, antioxidant, and fat on conversion of carotene to vitamin A in the chicken. Arch. Biochem. &Biophys. 55(1):297-298.

(144) Almquist, H. J. 1952. Relation of vitamin A intake to plasma and liver vitamin A content. Arch. Biochem. & Biophys. 39(1):243-244.

(145) Almquist, H. J. 1951. Ernahrung. Ann. Rev. Biochem. 20:305-342.

(146) Alov, I. A. 1957. Cell division and vitamin A. Bull. Eksptl. Biol. & Med. (Transl. )43(2): 206-209.

(147) Al'tgauzen, V. L. and M. V. Lepskaya. 1948. Vitamin A and its significance in skin tuberculosis. Problemy Tuberk. 1948 (1):57-60.

(148) Althausen, T. L. ;et al. 1950. Digestion and absorption after massive resection of the small intestine. II. Recovery of the absorptive function as shown by intestinal absorption tests in two patients and a consideration of compensatory mechanisms. Gastroenterology 16:126-39

(149) Althausen, T. L. ;et al. 1960. Effects of alcohol on absorption of vitamin A in normal and in gastrectomized subjects. Gastroenterology. 38(6):942 -945.

(150) Altieri, A. ;et al. 1956. Blood after dialysis. I. Vitamins. 1. Ascorbic acid. Chir. E. Pathol. sper. 4:215-218.

(151) Altschule, M. D. 1935. Deficiency in spite of adequate diet in congenital atresia of bile ducts and jaundice. Arch. Path. 20:845-856.

(152) Alvarez, J. G. 1947. Vit. A deficiency of cattle in Colombia, S. A. J. Am. Vet. Med. Assoc. 111 (846):216-217.

(153) Alvarez, J. C. 1943. Therapy of hypertensive allergic diseases. Rev. de med. y. Cir. Habana. 48:271-280.

(154) Alvsaker, J. O. ;et al. 1966. The presence of vitamin A in human trytophan-rich prealbumin. Biochem. J. 102(1):362-366.

(155) Amagasaki, M. 1938. Calcium and potassium content of blood and skin and cutaneous sensibility in experimentally produced hypervitaminosis. Jap. J. Dermat. &Urol. 44:5-9.

(156) Amano, S. ;et al. 1963. Congenital malformation in rats due to hypervitaminosis A in combination with trypan blue and cortisone acetate. J. Osaka City Med. Cent. 12:303-309.

(157) Amante, S. und M. Mancini. 1956. Wirkung von vitamin A auf den durch Histamin-Antihistaminica experimentell ausgelosten Magenulclus. Boll. soc. ital. Biol. sperim. 32. 1482-1484.

(158) Amante, S. and M. Mancini. 1956. Die Wirkung von Vitamin A auf die .Nierenveranderungen durch den Schlingenschock beim Meer schweinchen. Boll. soc. ital. Biol. sperim. 32:1477-1479.

(159) Amber, L. S. Cheng and H. J. Deuel, Jr. 1950. Carotenoid metabolism. X. The site of conversion of carotene to vitamin A in the chick. J. Nutrition 41. 619-28.

(160) Ambrosi, F. 1937. Influence of vitamin D, associated with vit.A. on cicatrization of tissue;experimental study. Policlinico. (sez. chir.)44:273-281.

(161) Amemiya, T. ; . 1967. Histochemical examination of retinas of rats with vitamin A excess and deficiency. 2. Effect of vitamin A on the fat constitution in the retina . Acta Soc Opthal Jap. 71: 2203-2211.

(162) Amemiya, T. 1967. Alcohol dehydrogenase system in the pigment epithelium of the normal rat retina, and in hypo and hypervitaminosis A. Nippon Ganka Gakkei Zasshi. 71 (11):2115-2123.

(163) Amemiya, T. 1967. Cytochemical and electron microscopic examination of the retina of rats with hypervitaminosis A. Acta Soc. Opthal. Jap. 71:2236-2251.

(164) Amemiya, T. 1967. Histochemical examination of retinal vitamin A. I. Distribution of Vitamin A in the retina. Acta soc. Opthal Jap. 71: 2079-2083.

(165) Amemiya, T. 1969. Fine structure of Bruch's membrane in vitamin A deficiency and urethan intoxication. Acta Soc. opthal. Jap. 73: 166-173.

(166) Amemiya, T. 1969. Vit. A deficiency and the inner retina. An electron microscopic study. Acta Soc. Opthalmol. Jap. 73(6): 751-759.

(167) Ames, S. R. 1969. Factors affecting absorption, transport and storage of vitamin A. Am. J. Clin. Nutr. 22(7):934-935.

(168) Ames, S. R. 1958. Fat-soluble vitamins. Ann. Rev. Biochem. 27:371-402.

(169) Ames, S. R. 1965. Bioassay of vitamin A compounds. Federation Proc. 24(4 pt. 1):917-923.

(170) Ames, S. R. 1966. Methods for evaluating vitamin A isomers. J. Asso. Offic. Anal. Chem. 49(5):1071-1078.

(171) Ames, S. R. 1956. Slope-ratio liver-storage bioassay for vitamin A. Anal. Chem. 28:874-878.

(172) Ames, S. R. 1954. Identification of the so-called lard factor as vitamin A. Science. 120:391-393.

(173) Ames, S. R. 1960. Bestimmung der biologischen Aktivitat von Vitamin A enthaltenden Stoffen durch Ermittlung des "Maleinsaure-Wertes". J. Assoc. off. agric. Chemists. 43:21-25.

(174) Ames, S. R. et. al. 1952. Biochemical studies on vitamin A. X. A nutritional investigation of synthetic vitamin A in margarine. J. Am. Oil Chem. Soc. 29:151-153.

(175) Ames, S. R. et. al. 1954. Simplified procedure for extraction and determination of vitamin A in liver. Anal. Chem. 26:1378-1381.

(176) Ames, S. R. ;et al. 1960. Estimation of the biological potency of isomerized vitamin A palmitate in aqueous multivitamin dispersions from maleic values. J. Am. Pharm. Assoc. , Sci. Ed. 49:366-368.

*(177) Ames, S. R. ;et al. 1952. Hypervitaminosis A induced by crystalline vitamin A acetate. Fed. Proc. 11(1):181

(178) Ames, S. R. :et al. 1955. Biochemical studies on vitamin A. XIV. Biopotencies of geometric isomers of vitamin A acetate in the rat. J. Am. Chem. Assoc. 77:4134-4136.

(179) Amici, A. 1957. Supposed relation between anemia and vitamin A. Riv. biol. (Perugia). 49:277-287.

(180) Amine, E. K. ;et al . 1970. Comparative hematology during deficiencies of iron and vitamin A in the rat. J. Nutr. 100:1033-1040.

(181) Ammann, P. ;et al. 1968. A contribution to hypervitaminosis A. Helv Paediat Acta. 23:137-146.

(182) Ammon, R. 1938. Vitamine und Magen-Darmkanal. Klin. Wschr. 17: 1825-1829.

(183) Amos, A. J. and D. W. Kent-Jones. 1942. The technological aspect of food fortification. Chemistry &Industry. 79-82.

(184) Ampiee, M. 1956. Vit. A and provitamin A in annatto. Rev. biol. trop., Univ. Costa Rica. 4:227-233.

(185) Anagostu, J. 1939. The effect of vitamin A on thrombocytes and bone marrow. Klin. Wochschr. 18:1277-1279.

(186) Anantakrishnan, C. P. and J. Conochie. 1958. Vitamin A in reconstituted fortified nonfat milk solids. Aust. J. Daily Technol. 13:151-154.

(187) Anantakrishnan, C. P. and Z. R. Kothavalla. 1946. The chemical composition of colostrum butterfat. Ind. J. Vet. Sci. 16:167-170.

(188) Anantharamiah, S. N. ;et al. 1950. Studies on Vitamin A in milk. I. Effect of varying carotene intake on the vit. A potency of buffalo milk and butterfat. Ind. J. Dairy Sci. 3(1): 31-38.

(189) Anastasi, A. ;et al. 1952. Chemical determination of vitamins A, B1, B2, B6, C, PP, and calcium pantothenate contained in multivitamin preparations. Boll. Chim. Farmaceut. 91(6):222-226.

(190) Anastasi, A. ;et al. 1952. Spectrophotometric determination of vitamin A in aqueous solutions. Boll. Chim. Farmaceut. 91(4):133-138.

(191) Andersen, A. and E. Nightingale. 1929. Test for Vitamin A in margarine, butter, and other fatty foods. J. Soc. Chem. Ind. 48:139-40T.

(192) Andersen, C. A. and G. H. Hart. 1943. Histological changes in the retina of the vitamin A deficient horse. Am. J. Vet. Res. 4(13):307-317.

(193) Andersen, D. H. 1949. Effect of diet during pregnancy upon the incidence of congenital hereditary diaphragmatic hernia in the rat. Failure to produce cystic fibrosis of the pancreas by maternal vitamin A deficiency. Am. J. Path. 25(1):163-185.

(194) Andersen, D. H. 1939. Cystic fibrosis of pancreas, vitamin deficiency and bronchiectasis. J. Pediat. 15:763-771.

(195) Andersen, O. 1939. Untersuchungen uber die Wirkung von Paraffinoleingabe auf die Resorption des A-Vitamins bei Menschen. Klin. Wschr. 18:499-502.

(196) Andersen, O. 1933. Uber die Verhaltnisse den Lysozyms bei Xerophthalmie. Acta Pediatr. 14(1/2):81-91.

(197) Andersen, O. 1938. Effect of administration of paraffin oil on resorption of vitamin in man. Hospitalstid. 81:29-41.

(198) Anderson, E. O. and P. MacLeod. 1949. The effect of prepartum milking and feeding of vitamin A-supplemented ration on the leucocyte count of postpartum milk samples. J. Dairy Sci. 32: 804-805.

(199) Anderson, L. F. and G. K. Klintworth. 1961. Hypovitaminosis-A in a family with tylosis and clinodactyly. Brit. Med. J. 5235:1293-1297.

(200) Anderson, F. E. 1969. Relation between serum vitamin A and sun exposure. Australas. J. Dermatol. 10:26-32.

(201) Anderson, J. F. 1931. The U. S. P. biological assay of cod-liver oil, present and future. J. Am. Phar, Assoc. 20:117-119.

(202) Anderson, M. D. ;et al. 1964. Vitamin A toxicity in the young pig. In:Mtg. of Midwestern Sec., Am. Soc. Animal Sci. Chicago, Ill. J. Animal Sci. 23(4):1205.

*(203) Anderson, M. D. ;et al. 1966. Hypervitaminosis A in the young pig. J. Animal. Sci. 25(4):1123-1127.

(204) Anderson, O. 1939. The effect of the ingestion of paraffin oil on the resorption of vitamin A in man. Acta. Paediat. 24:422-423.

*(205) Anderson, O. R. ;et al. 1967. Dietary retinol and alpha-tocopherol and erythrocyte structure in rats. Nature. 213 (5071):47-49.

(206) Anderson, R. A. ;et al. 1968. Automated analysis of vitamin A in multivitamin preparations. Ann. N. Y. Acad. Sci. 153(2):471-485.

(207) Anderson, R. A. ; V. F. Pfeifer. 1970. Stability of vitamin A in wheat flour. Northwestern Miller. 277(3):14, 16 &18.

(208) Anderson, R. K. and D. F. Milam. 1945. Biomicroscopy of the eyes inevaluation of nutritional status. Conjunctival changes. J. Nutr. 30(1):11-15.

(209) Anderson, T. A. ;et al. 1962. Influence of protein depletion on vitamin A and carotene utilization by vitamin A deficient sheep. J. Nutr. 78(3):341-347.

(210) Anderson, T. A. ;et al. 1962. Reliability of the liver biopsy technique for estimating hepatic vitamin A. J. Animal Sci. 21(2):369-372.

(211) Anderson, T. A. 1962. Nutritional, environmental, and endocrinological factors affecting the efficiency of utilization of Vitamin A and carotene by vitamin A-deficient rats and ruminants. Dissertation Abstr. 23, 1400.

(212) Anderson, Thomas A. et. al. 1964. Effect of thyroxine, and ambient temperature on the utilization of vitamin A by vitamin A deficient rats. J. Nutr. 82 (4):457-462.

(213) Andervont, H. B. 1939. Studies on some possible causative factors of the spontaneous adenomatous lesion of the stomach in mice of strain I. Publ. Health Repts. 54(47):2085-2093.

(214) Andre, E. and J. Pradain. 1948. Application of the method of selective solubility to the fractionation of the principle intermediates of karite oil. Oleaginaux. 3:72-73.

(215) Andre, E. and R. Lecoq. 1932. The reserves in vitamins A and D of some cartilaginous fish. Compt. rend. 194:912-914.

(216) Andre, L. M. and M. Ganzin. 1954. Hypervitaminosis A and avitaminosis C. Bull. Acad. Nat. Med. 138:357-359.

(217) Andreevskaya, L. V. ; et al. 1970. Obtaining a liquid milk product for feeding very young infants. (Soviet Socialists Repub. ) USSR Pat. No. 280 227

(218) Andreis, N. 1931. Vitamin A and antirachitic factors in fresh milk and in galapan (dried milk preparation). Pensie ro med. 20:203-205.

(219) Andrews, J. S. and S. Futterman. 1964. Metabolism of the retina. V. The role of microsomes in vitamin A esterification in the visual cycle. J. Biol. Chem. 239(12):4073-4076.

(220) Andrews, J. S. and S. Futterman. 1964. Vitamin A esterification in the retina. 48th Ann. Mtg. of the Fed. of Amer. Soc. for Experimental Biology, Chicago. Federal Proc. 23(2 Pt. 1):527. 1964.

(221) Angius, T. 1946. Improvement of twilight vision (form perception) in normal individuals by administration;experimental study. Rassegna ital. d'ottal. 15:11-19.

(222) Angius, T. 1946. Crepuscular vision:light and form perception in various sectors of retina by minimum light and modifications through effect of vitamin A;experimental study. Rassegna ital. d'ottal. 15: 182-190.

(223) Angrist, A. ;et al. 1959. Relative roles of vitamin A deficiency, foreign body irritation, and estrogen administration in the production of squamous metaplasia in the rat bladder. Proc. Amer. Assoc. Cancer Res. 3(1):3.

(224) Angulo. J. J. ;et al. 1948. Vitamin A content of Cuban cow milk and of liver oils of Cuban sea sharks. Food Research. 13:1-5.

(225) Anisova, A. A. 1964. Vitamin A blood level as an indication of an adequate vitamin A supply in the organism. Vop. Pitan. 23(3):29-33.

(226) Anjaneyalu, Y. V. ;et al. 1963. Ethoxyquin und Eidotterpigmentierung. Proc. Soc. exp. Biol. Med. 113:275-278.

(227) Anmo, T. ;et al. 1966. Studies on the changes of vitamin A alcohol and its esters in various alcohols. Vitamins(Kyoto). 34(5):495-499.

(228) Anmo, T. ;et al. 1968. Studies on the stability of vitamin A, II. Studies on the change rate and its process of vitamin A acetate in aqueous ethanolic solution. Vitamins (Kyoto):37(1):19-24.

(229) Anmo, T. ;et al. 1968. Studies on the stability of vitamin A.III. Studies on the change rate and its process of anhydrovitamin A in aqueous ethanolic solution. Vitamins. 38(6):427-433.

(230) Annes-Dias, C. 1940. Correlation between Vitamins A and C. Acta Med., Rio de Janeiro. 6:111-115.

(231) Annok, L. und. J. Buchgraber. 1933. Der Einfluß der Vitamine auf die Vermehrung und Toxinerzeugung der Diphtheriebacillen. Magyar orvosi Archivum 34:220 bis 223.

(232) Anokhin, B. M. 1966. Characteristics of vitamins A, C, and carotene metabolism in normal and dyspeptic calves. Veterinariya. 43(11): 58-59.

(233) Anokhin, B. M. 1967. Vitamin A metabolism in healthy calves and in calves with dyspepsia. Veterinaria. 44:80-82.

(234) Anon. 1938. The vitamin C and A content of sweet mustard. In "Vorratspflege und Lebaromittelforschtung." Vol. I. Pgs. 311-314. FIAT Microfilm Reel AA1.

(235) Ibid. 1940. Concentration rich in Vitamin A made of butter. Vol. III. Pgs. 53-58. FIAT Microfilm Reel AA2.

(236) Ibid. 1941. Biological, Chemical and Physical Methods for determining β-carotene and Vitamin A. Vol. IV. Pages 17-33. FIAT Microfilm Reel AA2.

(237) Anon. 1939. The papaya "Columbiana". Rev. agr. Puerto Rico. 31: 82-85.

(238) Anon. 1930. Treatment of milk by heat (stassanization). 8th Rept. of Nat. Exper. Dairy, Hillrod, Denmark. Lait. 10:382-393. 493-509.

(239) Anon. 1933. Biologic and chemical study (Chronique biologique et scientifique. La vitamine A.) Schweiz. med. Wchnschr. 63:1247-1248.

(240) Anon. 1935. Apparat zur Messung des Vitamin-A-Gehalts. J. Sci. Inst. 12:172-173.

(241) Anon. 1935. Vitamin A and urinary lithiasis; report of Council on Pharmacy and Chemistry, J. A. M. A. 105:1983-1985.

(242) Anon. 1936. Der Stand gewisser Vitaminfragen. J. Am. med. Asso. 106:1732-1735.

(243) Anon. 1937. Mineral oil in foods;report of Council on Foods. J. A. M. A. 109:1814-1815.

*(244) Anon. 1939. Leading Articles. Clinical studies of vitamin A. Brit. Med. J. 1939(4091):1141-1142.

(245) Anon. 1939. Progress in our knowledge of vitamin A. Int. M. J. Digest. 35:374-381.

(246) Anon. 1940. Lithiasis and night-blindness. Lancet. 238(6073):135.

(247) Anon. 1940. Dark adaptation. Lancet. 238(6075):237-238

(248) Anon. 1941. The carrot as food. Nature (London). 147:132-133.

(249) Anon. 1941. Definition and standard of identity for oleomargarine. Federal Register 6: 2761-2763.

(250) Anon. 1942. Proceedings of the Sociedad de Oftalmologia del Litoral. Rev. Med. Rosario. 32(5):388-389.

(251) Anon. 1944. South African fish-liver oils as sources of vitamins A and D. S. Afr. Med. J. 18:46-48.

(252) Anon. 1944. Margarine fortified with vitamin A;report of Council on Foods and Nutrition. J. Am. Med. Asso. 126:168.

(253) Anon. 1945. Vitamin A deficiency and the requirements of human adults. Nature (London):156(3949):11-12.

(254) Anon. 1945. Tables of the vitamin values of edible vegetable products. Pubs. inst. nacl. nutricion Buenos Aires, Pubs. cient. CNP 29, 9-55

(255) Anon. 1945. Bureau of dairy industry. Vitamin A in butter. U. S. Dept. Agric. Misc. Publ. 571: 1-14

(256) Anon. 1946. Present knowledge of vitamin A in nutrition. Nutrition Rev. 4:67-69.

(257) Anon. 1947. Food values of dairy products as affected by methods of handling in production, distribution and use. Food and Nutrition Section (American Public Health Assoc. Am. J. Pub. Health 37:1113-1120

(258) Anon. 1947. Association of Vitamin Chemists, Inc. Methods of vitamin assay. Interscience Publishers, Inc. New York, N. Y.

(259) Anon. 1948. Fortification of milk with vitamins A and D. Report of Council on Foods and Nutrition, J. Am. Med. Asso. 138:23.

(260) Anon. 1951 Analytische Chemie. Vit. A. Trade J. 22:237-239.

(261) Anon. 1952 Die Resorption von Vitamin A. Australas. J. Pharmacy (N.S.) 33: 106. 29/2.

(262) Anon. 1952. Vitamin A und C in der Milch. Sozialist. Tierzucht 14. No. 7: 93-94.

(263) Anon. 1952. Avocadool in Korperpflege-und pharmazeutischen Praparaten. Perfum. essent. Oil Rec. 43: 399-400.

(264) Anon. 1953. Uber den Carotin-und Vitamin -A-Gehalt in Milch und Butter. Molkerei-Ztg. 7: 273. 12/3.

(265) Anon. 1958. New tomato variety developed at Purdue. Seed World 82(2): 33 37.

(266) Anon. 1959. Congenital hypervitaminosis A. Nutr Rev 17:276-7.

(267) Anon. 1960. Vitamin A tolerance test and disorders of fat metabolism. Nutr Rev 18:5-6.

(268) Anon. 1960. Vitamin A acid and the function of vitamin A. Nutr Rev 18:349-50.

(269) Anon. 1961. Relation of vitamin A to mucopolysaccharide formation. Nutr Rev 19:91-2.

(270) Anon. 1961. Levels of vitamins A and E in human blood. Nutr Rev 19:101-3.

(271) Anon. 1961 . Bitot's spots. Nutr Rev 19:104-5.

(272) Anon. 1961. Vitamin A in local ocular therapeutics Conf Lyon Ophtal 59:13-23.

(273) Anon. 1961. Ubiquinone in vitamin A deficiency. Nutr Rev 19:218-21.

(274) Anon. 1961. Vitamin A and dermatosis . Publ. Cient Alter 10:154-61.

(275) Anon. 1961. Vitamin A and proteins in blood and liver. Nutr Rev 19:344-6.

(276) Anon. 1962. Ubiquinone, cholesterol and squalene biosynthesis in vitamin A deficiency. Nutr Rev 20:92-4.

(277) Anon. 1962. Effect of vitaminA deficiency on growing calves. Agric. Res (India) 2(2):92.

(278) Anon. 1962. Effect of vitamin A on vitamin D toxicity. Nutr Rev 20:315-6

(279) Anon. 1963. Vitamin A in human livers. Nutr Rev 21:71-2.

(280) Anon. 1963. Effect of vitamin A deficiency on the ubiquinone content of rat liver. Nutr Rev 21:154-5.

(281) Anon. 1963. Liver vitamin A levels during deficiency. Nutr Rev 21:317-8.

(282) Anon. 1964. Vitamin A deficiency in chicks. Nutr. Rev. 22:13-14.

(283) Anon. 1964. The effect of an excess of vitamin A on proteolytic activity. Nutr Rev 22:55-8.

(284) Anon. 1964. Intestinal absorption of vitamin A. Nutr Rev 22:86-90.

(285) Anon. 1964. Toxic reactions of vitamin A. Nutr Rev 22:109-11.

(286) Anon. 1964. The effect of an excess of vitamin A on membranes in vitro. Nutr Rev 22:146-9.

(287) Anon. 1964. The effect of triiodothyronine on the vitamin A status of beef cattle. Nutr Rev 22:184-6.

(288) Anon. 1964. Effect of high levels of oral vitamin A on the skin. Nutr Rev 22:255.

(289) Anon. 1964. Corneal sensitivity and plasma vitamin A concentration. Nutr Rev 22:349-51.

(290) Anon. 1964. Bestimmung der fettloslichen Vitamine in Nahrungszusatzen und in zusammengesetzten Futtermitteln. Analyst 89: 7-17.

(291) Anon. 1965. Interrelationships between vitamins A and E. Nutr Rev 23:82-4.

(292) Anon. 1965. The esterification of retinol. Nutr Rev 23:218-21.

(293) Anon. 1965. Vitamin A and vascularization. Nutr Rev 23:248-50.

(294) Anon. 1965. Vitamin A intoxication in infancy. Nutr Rev 23:263-5.

(295) Anon. 1965. Vitamin A deficiency in chickens and CNS changes. Nutr Rev 23:313-4.

(296) Anon. 1966. Transport of vitamin A in the lymphatic system. Nutr Rev 24:16-8.

(297) Anon. 1966. The antagonistic effect of vitamin A on vitamin K in the germfree rat. Nutr Rev 24:125-7.

(298) Anon. 1966. The influence of vitamin A on sulfate and hexosamine metabolism. Nutr Rev 24:204-9.

(299) Anon. 1966. The effect of dietary nitrite on liver storage of vitamin A in the rat. Nutr Rev 24:216-8.

(300) Anon. 1966. Vitamin A and lysosomes. Nutr Rev 24:240-4.

(301) Anon. 1966. Retinal and the reproductive system of the chicken. Nutr Rev 24:250-2.

(302) Anon. 1966. Vitamin A deficiency and blindness. Lancet 2:536-7.

(303) Anon. 1966. Lipids and fat soluble vitamins in cellular metabolism. Nutr Rev 24:272-4.

(304) Anon. 1966. Fortification of nonfat milk solids with vitamins A and D. J. Am. Med. Asso. 197:1107-1126.

(305) Anon. 1967. Vitamin A transport in man. Nutr Rev 25:199-201.

(306) Anon. 1968. Nonfat dry milk fortified with vitamins A and D; identity; label statement of optional ingredients. Fed. Regist. 01 33(149): 10926-7.

(307) Anon. 1969. Bregott - a completely new dietary fat. Svenska Mejeritidningen 61 (23): 438-40.

(308) Anon. 1969. Blends complex flour continuously. Food Engineering 41 (2) 108 - 110.

(309) Anon. 1969. Today's drugs: vitamin A. Brit Med J 1:38-9.

(310) Anon. 1969. Protein synthesis in intestinal mucosa of rats deficient in vitamin A.

(311) Anon. 1970. Vitamin A and glucocorticoid biosynthesis. Nutr Rev 28:190-2.

(312) Anon. 1969. Protein synthesis in intestinal mucosa of rats deficient in vitamin A. Nutr Rev 27:320-3

(313) Anon. 1970. New York children lack vitamin A. Nature (Lond) 228:309.

*(314) Anon. 1971. The use and abuse of vitamin A. Can Med Assoc J 104:521-2

(315) Anon. 1952. Definition and standard of identity for oleomargarine. Federal Register 17:4613-4615.

(316) Ansorena, A. de.; et al. 1947. Influence of vegetable hormones and growth-promoting substances on the primary development of rice. Bol. inst. nacl. invest. agron. (Madrid) No. 16: 125-87.

(317) Antener, I.; et al. 1962. The effect of xantophyll on the level of vitamin A in the liver of mother animals and their fetuses. Internatl. Zeit. Vitaminforsch. 32(4): 459.

(318) Antila, M. 1953. Stability of vitamin A and carotene in butter. Proc. 13th Intern. Dairy Congr. (Hague) 3: 1439-42.

(319) Antila, M.; et al. 1952. Stability of vitamin A and carotene in butter made by different methods. Acta Agr. Scand. 2: 210-14.

(320) Antila, P.; et al. 1967. Effect of technicological processes on the vitamin A content in liver. Fleischwirtschaft, 47(12): 1346-8.

(321) Antila, V. 1966. Fatty acid composition, solidification, and melting of Finnish butterfat. Finnish J. Dairy Sci. 27(1): 72 pp.

(322) Antila, V. and M. Antila. 1963. Die Wirking von Propionibacterium Jensenii auf die Stabilitat van Milchfett. Suomen Kemistilehti B 36:217.

(323) Anton, E and D. Brandes. 1967. Studies of L-1210 Leukemia. IV. Ultrastructural findings after in vitro treatment with cyclophosphamide and vitamin A[mouse] Exp Mol Pathol 7(2): 156-181. Illus.

(324) Antoniani, C.; et al. 1948. Use of glycerol 1, 3-dichlorohydrin as reage in the determination of vitamin A in oil concentrates. Olearia 405-7.

(325) Antonov, V, Ya. 1962. Vitamin A concentration in the milk of Romanovsk sheep. Tr. Nauchn.-Proizv. Konf. Pskovsk. Obl. Vet. Bakteriol. Lab., Leningr. Nauchn.-Issled. Vet. Inst. Pskov. 31-35.

(326) Aoe; et al. 1968. Requirement of young carp for vitamin A. Bull Jap Soc Sci Fish 34(10): 959-964

(327) Aoki, I. K. 1928. Feeding experiments on young cats with diets deficient in vitamin A, especially in regard to change occurring in the heart and skeleton muscles. Trans. Japan. Path. Soc. 18: 167-72.

(328) Aoki, K. 1929. Vergleichende Studien uber die A-Avitaminose der jungen Katze und der Merschweinchen insbesondere die histologischen Befunde des Knochensystems. Trans. Japanese Path. Soc. 19:271-279.

(329) Aoyama, M. 1952. Direct determination of genuine vitamin A in liver oils. Kitasato Arch. Exper. Med. 25: 65-66.

(330) Aoyama, M. 1951. Flurometric determination of vitamin A. Vitamins (Japan) 4, 15-17.

(331) Aoyama, M. 1951. Chemical determination of vitamin D. Kitasato Arch. Exptl. Med. 24, 51.

(332) Aoyama M. and I. Kawaguchi. 1951. Remarks on vitamin assays. XXXVI. Standardization of the activated alumina BL-6. Igaku to Sabutsugaku (Med. and Biol.) 18: 138-9

(333) Appleton, M. D.; et al. 1964. Role of vitamin A in gamma globulin biosynthesis and uric acid metabolism of mongoloids. Am. J. Mental Deficiency 69(3): 324-7.

(334) Araki, E. 1958. Morphogenesis of cranial malformation due to excessive vitamin A. Jour. Osaka City Med. Center 7(6): 31-38.

(335) Araki, M.; et al. 1957. Histochemical study of vitamin D. Jour. Vitaminol 3(1): 61-68.

(336) Arauz, J. C. 1961. Laryngeal papillomas in the child. Our experience with vitamin A. Preliminary report. Prensa Med Argent 48:3214.

(337) Arcangeli, P and M. Matteini. 1954. Vitamin A and gonadotropic function of the hypophysis. Rass. neurol. vegetativa 10, 439-48.

(338) Arce-Paiz, A. 1967. The nutritional problem of Nicaragua: Evaluation of a survey. Nicaragua Med 23(2): 56-61

* (339) Arcus, A. C. and G. G. Dunckley. 1961. Chromatography of some lipids on poly (tetrafluoroethylene). J. Chromatog. 5:272-273.

(340) Ardenne, M. von; et al. 1970. Erythema formation as a cause of cell damage chain reaction with poisoning of lysosomal enzymes in low skin pH-Erythema prevention by multiphased therapy by hyperthermy with a two chamber tub. Z. Naturforsch (B) 25:872-84

(341) Ardenne, M. von and R. A. Chaplain. 1969. In vivo experiments in multistep cancer therapy triggered by vitamine A + dimethyl-sulfoxide. Z. Gesamte Inn Med Grenz 24(18): 609-613.

(342) Ardenne, M. von; et al. 1969. Selective injury to cancer cells by a combined attack with acidification, heat, vitamin A, dimethyl sulfoxide and other agents facilitating the release of lysosomal enzymes. Arch Geschwulstforsch 33:331-44.

(343) Arena, J. M.; et al. 1951. Hypervitaminosis A: Report of unusual case with marked craniotabes. Pediatrics 8(6): 788-794.

(344) Argenta, G. and A. Moavero Milanesi. 1960. Histological and histochemical study on the brain of albino rats fed with a diet poor in vitamin A. Riv. Neurol. 30(2): 113-32.

(345) Argonz, J. and C. Abinzana. 1950. Premenstrual tension treated with vitamin A. J. Clin. Endocrinol. 10: 1579-1590.

(346) Ariga, K. 1952. The decomposition of vitamin A by various factors. III. The decomposition of vitamin A by ultra sound wave and the effects of various inorganic salts. Jour. Japanese Biochem. Soc. 23(4):260-264.

(347) Arnrich, L. 1955. Die wirkung einer Hypothyreose auf den Stoffwechsel von Carotin in Hunden. J. Nutrit. 56: 35-49. 10/5.

(348) Arnrich, L. and A. F. Morgan. 1954. The utilization of carotene by hypothyroid rats. Jour. Nutrition 54(1):107-119.

(349) Aron, H. 1928. Was bedeutet die Leberdiat bei der perniciosen Anamie. Janresber 101, Schlesisch Ges. Vaterland, Cultur Med. Sect. Pt., 1928 2:125-134.

(350) Aron, H. 1949. Plasma vitamin A and its clinical significance. Amer. Jour. Dis. Children 77(6): 763-773.

(351) Aron, H.; et al. 1946. Effect of elevated body temperature on plasma vitamin A and carotene. Proc. Soc. Exptl. Biol. Med. 61:271-276

(352) Arons, Ph. and M. P. J. van der Rijst. 1932. Uber die Ursache der infektionen bei vitamin A mangel. Nederl. Tijdschr. Geneeskunde 76: 5445-57.

(353) Arrington L. R. and P. M. Reaves. 1948. Studies of the growth and blood composition of dairy calves fed remade skim milk after three days of age. J. Dairy Sci. 31:1-9.

(354) Arroyave, Guillermo. 1969. Interrelations between protein and vitamin A and metabolism. Amer. J. Clin. Nutr. 22(8), 1119-28.

(355) Arroyave, G. 1970-Vitamin A and protein-caloric malnutrition. G. Bol Of Sanit Panam 69:198-211.

(356) Arroyave, G.; et al. 1960. Comparison of some bio chemical-nutritional data obtained on pregnant women of two socioeconomic levels in Guatemala. Rev. Co. med. Guatemala 11, No. 2: 80-7.

(357) Arroyave, G. ; et al. 1957. The nutrient content of the eggs of five breeds of hen. Poultry Sci. 36(3):469-473.

(358) Arroyave, G. ; et al. 1961. Vitamin A transport in severe protein malutrition. Fed. Proc. 20(1 Pt. 1):372.

(359) Arroyave, G. : et al. 1963. Alterations in serum concentration of vitamin A associated with the hypoproteinemia of severe protein malnutrition 1 Pediat 62:920-5.

(360) Arroyave G.; et al. 1961. Serum and liver vitamin A and lipids in children with severe protein malnutrition. Amer. Jour. Clin. Nutrition 9(2):180-185.

(361) Arroyave, G.; et al. 1959. Impairment of intestinal absorption of vitamin A palmitate in severe protein malnutrition. Am. J. Clin. Nutrition 7 : 185-90.

(362) Arruda, J. de. 1939. Pathology of epithelia in vitamin A deficiency. Bol. Secr. Ger. Saude assist 5: 57-74.

(363) Arruda, J. de. 1941. Epithellosis accompanying ocular disorders in avitaminosis. Ophtalmos 2:402-412.

(364) Arulanantham, R.;et al. 1955. Die wirkung einer, unzureichenden reisdiat mit zusatzlichen gaben von vitaminen und calcium. Proc. Soc. Biol. Chemists. India 13: 50.

(365) Arvay, A. V. 1926. Effect of an excess of A and B vitamin in the diet on the elementary metabolism and specific dynamic action of foodstuffs. Arch. ges. Physiol. 214: 421-38.

(366) Arvay, S. von. 1927. Action of vitamins A and B in excess in food upon basal metabolism and specific dynamic effect of food. Magyar orvosi Arch. 28:393-409.

(367) Arvay, A. von. 1928. Effect of insufficient A and B vitamins on decreasing specific dynamic action of food and amount of thyroid secretion. Biochem Ztschr. 192:369-382.

(368) Arvay, A. V. 1929. Die wirkung von Thyroxin und Praphyson auf Grundumsatz und spezifisch dynamische Wirkung nach Thyreoideaexstirpation und bei Avitaminose. (Inkretion und avitaminose X.) Biochem. Zeitschr. 205(4/6):433-440.

(369) Arvy, L. 1968. The kidney and vitamin A. Laval. Med. 39(2): 142-72.

(370) Arx, M. A. von. 1965. Hepatic reserve of vitamin A in relation to the metabolism of some amino acids. Minerva Med. 56(65-6): 2633-5.

(371) Asami, H. 1942. Influence of endocrine function and metabolic disorder upon blood pH. Report II. In the cases of hypervitaminosis A, $B_1$, $B_2$, C and D. Jour, Constitutional Med. 10(3):330-340.

(372) Asayama, R.: et al. 1960. The effect of vitamins on optic nerve action potential. Vitamin 21(3):407-412.

(373) Ascarelli, I. 1969. Absorption and transport of vitamin A in chicks. Amer. J. Clin Nutr. 22(7): 913-21.

(374) ) Ascarelli, I. 1957. The use of vitamin A protected by DPPD (diphenyl-p-phenylene-diamine) for the growth of chickens. Poultry Sci. 36(3): 549-551.

(375) Ascarelli, I.; et al. 1964. The influence of thyroid status on the utilization of vitamin A and carotene by chickens. Poultry Sci. 43(2):370-377.

(376) Ascarelli, I. and I. Bartov. 1963. Vitamin A requirement of chicks at moderately elevated temperature. Poultry Sci. 42;232-5.

(377) Aschaffenburg, R. ; et al. 1962. The composition of the milk of the reindeer. J. Dairy Res. 29: 324-8.

(378) Aschaffenburg, R. ; et al. 1953. The nutritive value of colostrum for the calf and the effect of soybean lecithin on the vitamin A absorption and on the growth rate of calves given small quantities of separated colostrum. Brit J. Nutrition 7:275-85.

(379) Ascham, L. 1933. The vitamin A content of pimiento pepper. Georgia Agric Exp. Sta. Bull. 177: 1-8

(380) Ascham. L. 1933. In pimiento pepper. Science 77:351

(381) Ascher, K. W. 1954. Study of 22 malnourished patients with Bitot's spots. Am. J. Ophth. 38:367-373.

(382) Aschkenasy, A. 1947. Role of vitamins in the formation of blood corpuscles. Ann. Nutrition et Aliment. 1:135-57.

(383) Aschoff. 1934. The carotene content of the human liver and fatty tissues. Verhandl. deut. path. Ges. 145-52.

(384) Ascoli, W.; et al. 1961. Vitamin A and its relationship to follicular hyperkeratosis and to endemic goitre among the school children of Vieja, Guatemala. Rev. Colegio Med. Guatemala 12(1): 30-33.

(385) Asenjo, C. F.; et al. 1935. Vitamin A content of West Indian shark. Puerto Rico J. Pub. Health and Trop. Med. 11, 158-62.

(386) Ashdhir, S. and B. Puri. 1962. Human milk studies--chemical composition of human milk at three different stages. Indian J. Pediat. 29, 99-109.

(387) Ashworth, L.A.E. and C. Green. 1963. The uptake of lipids by human α-lipoprotein. Biochim. Biophys. Acta 70, 68-74.

(388) Ashworth, U. S.: et al. 1945. The carotene and vitamin A contents of creamery butter produced in Washington. Wash. Agr. Expt. Sta. Bull. 466, 8

(389) Askren, E. L. 1937. Nutritional factors influencing vision; review of literature. Tr. Kansas Acad, Sc. 39:115-120.

(390) Asmundson, V. S. and F. H. Kratzer. 1952. Observation on vitamin A deficiency in turkey breeding stock. Poultry Sci. 31(1): 71-73.

(391) Asmundson, V. S. and F. H. Kratzer. 1952. Beobachtungen uber vitamin A mangel bei truthahnzuchten. Poultry Sci. 31:71-73.

(392) Astrup, H. et. al. 1962. Herring meal, antioxidants, and pork quality. Rappt. Nord. Fettarskningssymp. 3., Sandefjord, Norway 204-206.

(393) Atkeson, F. W.; et al. 1937. Recovery of carotene and vitamin A from butter when cows were fed unlimited quantities of green rye. J. Nutrition 14, 621-9.

(394) Atkinson, R. L. ; et al. 1963. Effects of vitamin A, vitamin E and ethoxyquin on the reproductive performance of turkeys. Poultry Sci. 42(6): 1380-1386.

(395) Atramentova V.G. 1968 The vitamin A Level in Cow's milk and butter in Kharkov District). Vop.Pitan.27: 83-4.

(396) Auden, G. A. 1929. Vitamin A. Deficiency and tonsillar enlargement. M. Officer 41:265

(397) Auld, Richard M. ; et al. 1959. Vitamin A absorption in mongoloid children. Am. J. Mental Deficiency 63: 1010-13.

(398) Aure. Lars. 1951. Vitamin A in viscera of cod and coal fish. Fiskeridirektoratels Skrifter, Ser. Teknol. Undersok 2, No. 1:3-12.

(399) Aure, Lars and Hans Klokstad. 1951. Vitamin A content of Green land shark produced in 1948. Fiskeridirektoratets Skrifter, Ser. Teknol. Undersok. 1, No. 8 :3-8.

(400) Aure, Lars and Hans Klokstad. 1951. Analysis of cod liver from West Greenland, Fiskeridirektoratets Skrifter, Ser. Teknol. Undersok. 1, No. 9, 3-11.

(401) Aure, Lars and Edward Troen. 1951. Refractive index of the unsaponifiable matter of pure gadus liver oils. Fiskeridirektorat. Skrifter 1, No. 11 :3-11. Ser Teknol. Undersok.

(402) Avampato, J. E. and H. D. Eaton. 1953. Comparison of methods for the estimation of Vitamin A in calf plasma. J. Dairy Sci. 36, 783-93.

(403) Avin, GSh. and iuP Pogonov. 1961. The use of vitamin A for increasing night vision in military personnel. Voennomed Zh.9:75-6,

(404) Awapara. Jorge. ; et al. 1946. A new spectrophotometric method for the determination of vitamin A. Science 104, 602-4.

(405) Awdeh, Z. L. 1965. Separation of vitamin A from carotenoids in micro samples of serum. Anal. Biochem. 10(1). 156-8.

(406) Awdry. P. N. and B. Cobb. 1964. Vitamin A deficiency and blindness in the Luapula Valley of Northern Rhodesia. Exptl. Eye Res. 3(4), 373.

(407) Awe, Walter and Rolf Pohlmann. 1960. Zur Kenninis der Stabilisierung von Vitamin A in Losumg. Deutschland 99. 275-80.

(408) Axelrod, A. E. and J. Pruzansky. 1955. The role of the vitamins in antibody production. Ann. . N. Y. Acad. Sci. 63:202-209.

(409) Axelrod. A. B. and J. Pruzansky. 1955. Role of the vitamins in antibody production. Vitamins and Hormones. 13:1-27.

(410) Axtmayer, J. H. and D. H. Cook. 1933. Nutrition studies of food stuffs used in Puerto Ri can dietary; vitamin contents of arracacha, eggplant, squash, chayote, pigeon pea, chick pea, string bean, mamey, red pepper, boiled green plantain, okra and cassava. Puerto Rico, J. Pub. Health and Trop. Med. 8:407-412.

(411) Axtmayer, J. H. and D. H. Cook. 1932. Nutrition studies of foodstuffs used in Puerto Rican dietary; vitamin A content of white and yellow yams. A. J. Trop. Med. 12:317-321.

(412) Aydelotte, M. B. 1963. Vitamin A deficiency in chickens. Brit. J. Nutr. 17 (2): 205-209.

(413) Aydelotte, M. B. 1963. Effects of vitamin A and citral on epithelial differentiation in vitro. I.the Chick tracheal epithelium. . J. Embryol. Exptl. Morphol. 11:279-291.

(414) Aydelotte, M. B . 1963. The effects of vitamin A and citral on epithelial differentiation in vitro. II. The chick esophageal and corneal epithelia and epidermis. J. Embryol. Exptl. Morphol. 11(3):621-635.

(415) Aykroyd, W. R. 1928. Vitamin A deficiency in Newfoundland. Irish J. Med. Sci. Series. 6(28):161-165.

(416) Aykroyd, W. R. 1930. Beriberi and other food deficiency diseases in Newfoundland and Labrador. J. Hyg. 30(3):357-386.

(417) Aykroyd, W. R. and B. G. Krishnan. 1936. Der Carotin-und Vitamin A Bedarf von Kindern. Indian Med. Gaz. 71:413-415.

(418) Aykroyd W. R. and B. G. Krishnan. 1936. The carotene and vitamin A requirements of children. Indian J. Med. Research 23:741-745.

(419) Aykroyd, W. R, and G Sankaran. 1936. Growth of embryonic Nervous tissue in plasma taken from vitamin deficient fowls and rats. Indian J. Med. Research 23:929-935.

(420) Azar, M. M. et. al. 1971. The inhibitory effect of vitamin A on complement levels and tolerance production. J. Immunol. 106:241-245.

(421) Azerad, E. 1939. Thyroid and vitamin: physiopathologic and therapeutic study. Bull. med., Paris 53:590-592.

(422) Aznar, S. B. 1964. Hidrocefalia experimental por hipervitaminosis A. Experimental hydrocephalus induced by high doses of vitamin. Bol. Patol. Med. 4(3): 70-73.

(423) Baalsrud, G. 1948. The determination of vitamin A. Tids. Kjemi, Bergvesen Met. 8:163-7.

(424) Baba, H. 1963. Der Wachstumseffedt von Vitamin A in Fischleberol auf Kuken. Jap. J. Nutrit. 21 : 8-13.

(425) Baba, H. et. al. 1969. Effect of vitamin A on free amino acids in plasma and nitrogen excretion in rats. Eiyogaku Zasshi. 27(2):39-41.

(426) Baba, H. 1961. Biochemical studies on the vitamin A in fish liver oil. Ann. Rept. Natl. Inst. Nutr. p. 23.

(427) Baba, H. 1961. Biological activity of vitamin A in fish liver oil. Ann. Rept. Natl. Inst. Nutr. 21-2.

(428) Baba, H. 1954. Simplified method of determination of vitamin D enriched in food. Japanese Jour. Nutrition 12: 155-159.

(429) Baba, H. 1963. Uber die Faktoren, die zur Isomerisierung von Vitamin A in Fischleberol fuhren. Jap. J. Nutrit. 21. 3-7.

(430) Baba, H. 1962. The vitamin A potency of fish liver oil and its effect on the growth of albino rat. 1. Growth test on various administration. Natl. Inst. Nutr. Tokyo Ann. Rept. 13-14

(431) Baba, H. 1962. The vitamin A potency of fish liver oil and its effect on the growth of albino rat. 3. A comparison of fish liver oil vitamin A potency obtained by various determination(s). Natl. Inst. Nutr. Tokyo Ann. Rept. 17-18.

(432) Baba, H. 1962. The vitamin A potency of fish-liver oil and its effect on the growth of albino rats. Eiyogaku Zasshi 20, 101-7.

*(433) Baba, H. 1966. On the isomerization of vitamin A in fish liver oil. Nat. Inst. Nutr Annu. Rep. p. 36-38.

(434) Baba, H. and M. Hirayama. 1967. The effect of water-soluble fraction of fish-liver on liver storage of vitamin A in rats. Ann. Rep. Nat. Inst. Nutr. 42-44.

(435) Baba, H. and M. Hirayama. 1964. Interaction of protein, amino acid, and vitamin A in their utilization. Ann. Rept. Natl. Inst. Nutr. Tokyo 3-4.

(436) Baba, H.; et al. 1969. Effects of vitamin A on free amino acids in plasma and nitrogen excretion of rats. Jap. J. Nutr. 27(2): 3-5.

(437) Baba, H. and Y. Noguchi. 1955. Uber die Bestandteile der Kuhmilch und ihre antioxydative Wirkung gegenuber Vitamin A. Jap. J. Nutrit. 14:171-175.

(438) Baba, H. 1962. The vitamin A potency of fish liver oil and its effect on the growth of albino rat. II. Liver storage and growth. Ann. Rept. Natl. Inst. Nutr. (Tokyo) 15-16.

(439) Baba, T. and S. Kuzukawa. 1963. Morphogenesis of malformation due to excessive vitamin A (V). Embryological studies on the inner ear malformation of rats due to excessive Vitamin A. Osaka City Med. Jour. 8(2): 105-119.

(440) Baba, T. and S. Nakamura. 1959. Changes in the rat fetus' inner ear due to an excessive vitamin A. Osaka City Med. Jour. 5(1): 1-7.

(441) Baba, T. and E. Araki. 1959. Morphogenesis of malformation due to excessive vitamin A. I. Morphogenesis of exencephaly. Osaka City Med. Jour. 5(1): 9-15.

(442) Baba, T. and K. Yukioka. 1959. Morphogenesis of malformation due to excessive vitamin A. II. Morphogenesis of cleft palate and its critical phase. Osaka City Med. Jour. 5(1): 91-97.

(443) Baba, T. and S. Kotani. 1959. Morphogenesis of malformation due to excessive vitamin A-III. morphogenesis of an-or microphthalmus. Osaka City Med. Jour. 5(2): 135-140

(444) Baba, T. and T. Tsuruhara. 1959. Morphogenesis of malformation due to excessive vitamin A (IV). Morphogenesis of congenital hydronephrosis and hydroureter. Osaka City Med. Jour. 5(2): 219-237.

(445) Babcock, M. J.; et al. 1955. Nutritional status of industrial workers. II. Effects of education, age, income, and ethnic groups. Milbank Memorial Fund Quart. 33(2): 137-51.

(446) Baccari, V. 1941. Vitamin A in bone marrow. Boll. soc. ital. biol. sper. 16: 752-3.

(447) Baccari, V. and I. Maranelli. 1942. Vitamin A content of some foods. Boll. Soc. Ital. Biol. Sper. 18:133-134.

(448) Bacharach, A. L. 1940. Effect of ingested vitamin E (tocopherol) on Vitamin A storage in the liver of the albino rat. Quart. J. Pharm Pharmacol. 13:138-149.

(449) Bacharach, A. L. 1940. Investigations into vitamin A-free basal diets. III. Biochem, J. 34 (4): 542-550.

(450) Bacharach, A. L. 1940. Vitamin requirements. Food. (:110-112.

(451) Bacharach, A. L. 1930. Vitamin A content of ghee. Brit. Med. J. II:141-142.

(452) Bacharach, A. L. et. al. 1934. The chemical (as distinct from physiological) tests for vitamins. Analyst. 59(695):70-96.

(453) Bacharach, A. L. et. al. 1933. I. Investigations into vitamin A-free basal diets. Biochem. J. 27(1): 5-16.

(454) Bacharach, A. L. and E. L. Smith. 1933. II Investigations into vitamin A-free basal diets. Biochem J. 27(1):17-21.

(455) Bacharach, A. L. et. al. 1931. The effect of adding vitamin A to a rachitogenic diet. Biochem. J. 25(2): 639-642.

(456) Bacharach, A. L. et. al. 1942. The herring as a source of vitamin A and D. Brit. Med. J. 2:691-693.

(457) Bacharach, A. L. et. al. 1936. Estimation of Vit. A. Nature. London. 137 :148-149.

(458) Bach, Karl. 1956. Effect of some metal ions on the stability of natural vitamin A. Acta. Chem. Scand. 10:334-335.

(459) Back, Karl. 1959. Die Virkung einiger Prooxydantien und Antioxydantien auf die Stabilitat des naturlichen Vitamin A. Die Begunstigung des Vitamin-A (1)-Abbaus durch Metallionen. Acta Chem. Scand. 13:60-74.

(460) Baczyk, S. et. al. 1970. Photometric determination of several fat-soluble vitamins (A, $D_3$, and $K_3$) in the presence of ecah other. Mikrochim Acta. 6:1306-1311.

(461) Badr El-Din. M. K. et. al. 1966. Serum vitamin A in infancy and childhood: (I-In the normal). J. Trop. Pediat. Afr. Child Health 12(3):59-62.

(462) Badr El-Din. M. K. et al. 1966. Serum vitamin A in infancy and childhood: (II-In the malnourished). J. Trop. Pediat Aft. Child Health 12(3):63-70.

(463) Baer, H. L. and Harold R. Vogel. 1940. The biophotometric study of vitamin A in dermatological conditions. Uro. Cutaneous Rev. 44; 176-81.

(464) Bagchi, K. and Ganesh Karmakar. 1964. Inter-relation of protein and vitamin A metabolism. Bull. Nat. Inst. Sci. India No. 25:130-4.

(465) Bagdon, R. E. ; et al. 1962. Toxicity and metabolism of 8'-apo-8-carotenal in dogs. Toxical. Appl. Pharmacol. 4;444-56.

(466) Bagdon, R. E. ; et al. 1960. Chronische Toxizitatsuntersuchungen non B-Carotin. Toxicol. appl. Pharmacol. 2: 225-36.

(467) Bagnall, H. H. and F. G. Stock. 1952. Critical account of spectrophotometric estimation. J. Pharm. & Pharmacol. 4:81-94.

(468) Bagnall, H. H. und F. G. Stock. 1951. Die Reproduzierbarkeit geometrischer Korrektions-verfahren bei der spektrophotometrischen Bestimmung von Vitamin A. Biochem J. 50: 48.

(469) Bagnall, H. H. und F. G. Stock. 1952. Vitamin A und der amfliche Analytiker. Pharmac. J. 168(4):114.

(470) Bahadur, Bhupendra. ; et al. 1950. Stratification of butter melt in ghee making. Indian J. Dairy Sci. 3; 94-106.

(471) Bahr, Von. G. 1941. Demonstration of deficiency. Vit. A-Nord. Med. (Hygia) 11:2103.

(472) Bailey, B. E. 1935. Vitamin A potency of liver oils from some miscellaneous Pacific Coast Fishes. Biol. Board Can., Progress Reports. Pacific Biol. Sta. and Pacific Fisheries Exptl. Sta. No. 26; 17-18.

(473) Bailey, E. M. 1928. The thirty-second report on food products and the twentieth report on drug products. Connecticut State Agric. Exp. Sta. Bull. 295: 305-355.

(474) Bailey, B. E. 1934. Nutritive value of marine products. VI. Vitamin A potency of salmon-liver oil. Contrib. Can. Bio. Fisheries 8; 267-74.

(475) Bailey, B. E. 1933. The nutritive value of marine products. V. The Vitamin A content of ling cod liver oil. Preliminary note. Contrib. Can. Biol. Fisheries 7; 405-12.

(476) Bailey, B. E. 1936. The nutritive value of marine products. Vll. The vitamin A and D potency of the oils from British Columbia canned salmon. J. Biol. Board Can. 2; 431-7.

(477) Bailey, J. H. and L. F. Nelson. 1965. Reproductive performance of sows on a ration devoid of carotene and vitamin A. J. Amer. Veterinary Med. Asso. 147(12): 1387-1392.

(478) Bair, George. 1951. Chronic vitamin A poisoning. Report of a case. J. Am. Med. Assoc. 146; 1573-4.

(479) Bajardi, G. and A. Galeone. 1940. Metabolism of factor A (vitamin and provitanin) in liver diseases. Minerva Med. 2: 265-274.

(480) Bajardi, G. and A. Galeone. 1941. Night blindness as sympton of hepatic disease; importance of vitamin. Policlinico (sez. prat.) 48: 193-204.

(481) Bajardi, G. and A. Galeone. 1940. Vitamin and provitamin A; critical and experimental study on determination of Vitamin A and of carotene in clinical practice. Arch. Per. li. Sc. Med. 69:381-428.

(482) Bajusz, Eors. 1959. Influence of humoral agents on recovery of sensory and motor function after nerve lesion. 1. Effect of cortisol, deoxycorticosterone, somatotropic hormone, and methyltestosterone. Z. Vitamin-Hormon-u. Fermentforsch 10:81-105.

(483) Bajusz, E. 1959. Influence of humoral agents upon recovery of sensory and motor function after nerve lesion. 2. Effect of estradiol, thyroxin, dihydrotachysterol, aminoacetonitrile, vitamin A and sodium dihydrogen orthophosphate. Z. Vitamin Hormon Fermentforsch. 10:212-224.

(484) Bakala, F. 1951. Addition of vitamin A to feed and its influence on laying, fertility, incubation, and its amount in chicken eggs. Spisy Vysoke Skoly Vet. Brno 29, 1-12.

(485) Baker, F. H. ; et al. 1954. The effect of vitamin A stores and carotene intake of beef cows on the vitamin A content of the liver and plasma of their calves. Jour. Animal Sci. 13(4): 802-807.

(486) Baker, F. H. ; et al. 1953. Placental and mammary transfer of Vitamin A and carotene by beef cows. Proc. Soc. Exptl. Biol. and Med. 83(3): 571-574.

(487) Baker, Herman. ; et al. 1967. Vitamin distribution in human plasma proteins. Nature 215(5096), 84-5.

*(488) Baker, J. R. ; et al. 1967. Hypervitaminosis A in the chick. Brit. J. Exp. Pathol. 48(5): 507-512.

(489) Baker, N. ; et al. 1959. ,"Fettsaureperoxyd"-Bildung in Geweben von Mausen mit erblicher Myopathie (Dystrophia muscularis). Amer. J. Physiol. 197. 483-86.

(490) Balachowski, S. D. 1934. Untersuchungen sur Frage der Rolle des Carotins im Organismus. Doklady Akademii Nauk. S. S. S. R. 1:28-30.

(491) Balachowski, Ss. D. and N. N. Drosdowa. 1957. Zur Frage des Wirkungsmechanismus von Vitamin A (Retinol). Kupferpolyenantagonismus und Keratinisierung des Epithelgewebes. Biochemie 22:330-335.

(492) Balachowski, S . D. and I. W. Kusnetzowa. 1958. Carotinoide Polyene und Oxydationsprozesse im Organismus. Vitamin A-Mangel und Oxydation von Schwefel im Organismus. Ber. Akad. Wiss. UdSSR 118. 331-33.

(493) Balachowski, S. D. and N. A. Troitzkaja. 1952. Uber die Moglichkeit der Aktivierung von Wasserstoffperoxyd durch Vitamin A und ihm Nahestehende Verbindungen. Ber. Akad. Wiss. UdSSR (N. S.) 82:285-287.

(494) Balakhovskii, S. D. 1956. Physiological and biochemical properties of carotenoid polyenes. (Mechanism of vitamin A action). Vitaminy, Akad. Nauk Ukr. S. S. R. 2, 70-85.

(495) Balakhovskii, S. D. ; et al. 1946. The antihistamine action and related compounds. Compt. rend. acad. sci. (U.R.S.S.) 54, 243-5.

(496) Balakhovskii, S. D. and N. I. Bulgakov. 1944. Dried, $SO_2$-treated leaves as a source of vitamins A and C. Biokhimiya 9, 22-35.

(497) Balakhovskii, S. D. and N. N. Drozdova. 1957. Mechanism of action of vitamin A (Retinol). The copperpolyene antagonism and keratinization of the epithelial tissue. Biochemistry (U. S. S. R.) 22,: 307-311 (English Translation)

(498) Balakhovskii, S. D. and I. V. Kuznetsova. 1958. Carotenoidal polyenes and oxidative processes in the organism. The deficiency of retinol and oxidation of sulfur in the organism. Doklady Akad. Nauk S. S. S. R. 118, 331-3.

(499) Balakhovskii, S. D. and I. V. Kuznetsova. 1955. Mechanism of action of carotenoids. Carotenoids and sulfur metabolism. Sissiya Akad. Nauk S. S. S. R. po Mirnomu Ispol'zovaniyu Atominoi Energii, Zasedaniya Otdel. Biol. Nauk, 320-336.

(500) Balakhovskii, S. D. and E. E. Provolovich. 1957. Antihistaminic activity of vitamin A and beta-ionone. Proc. Acad. Sci. U. S. S. R., Sect. Biochem. 116: 215-17 (English Translation).

(501) Balakhovskii, S. D. ; et al. 1954. Distribution of $^{35}S$ in organs and tissues of the normal and A-avitaminotic organism after intraperitoneal introduction of sulfur-labeled methionine. Doklady Akad. Nauk S. S. S. R. 97, 115-18.

(502) Balakaev, B. K. 1966. Some results of the use of vitamin A in the raising of Karakul sheep. Tr. Konf. Biokhim, Respub. Srednei Azii Kaz., 1st, Alma-Ata 274-8.

(503) Balandin, A. D. 1962. Content and distribution of retinol (vitamin A) in the liver of humans dying of tuberculosis. Uch. Zap. Stavropol'sk Med. Inst. 154-60.

(504) Balandin, A. D. 1960. An inherent yellow-green fluorescence of liver sections as an index of the vitamin A content of the human body. Arkh. Patol. 22(7): 70-74.

(505) Balassa, G. and G. Szanto. 1936. Methods of determination. Ztschr. f. physiol. Chem. 240: 29-32.

(506) Balassa, G. and G. Szanto. 1939. Antagonism between vitamins A and C with reference to the activity of the thyroid. Z. Vitaminforsch. 8, 233-7.

(507) Balasundaram, S. ; et al. 1955. High-potency vitamin $A_2$ oils from freshwater fish. Nature 176(4481): 554.

(508) Balasundaram, S. et. al. 1956. Vitamin $A_2$ in Indian freshwater fish-liver oils. Biochem. J. (London) 64, 150-4.

(509) Balasundaram, S. et. al. 1955. Bestimmung des Vitamin-$A_1$-und-$A_2$-Gehaltes des Leberols indischer See und Sufwasserfische mittels spektrophotometrischer Methoden. (Proc. Soc. Biol. Chemists, India 13. 35.

(510) Balasundaram, S.; et al. 1956. Spectrophotometric determination of Vitamin A in Indian marine fish liver oils. J. Sci. Ind. Research 15C, 23-7.

(511) Balasundaram, S. ; et al. 1957. Application of conversion factors for the determination of vitamin A in fish-liver oils. J. Sci. Ind. Research 16C, 8-11.

(512) Balbi, E. 1938. Quantitative determination of carotene and vitamin A in blood serum in dermatoses. Arch. Ital. di Dermat., sif. 14: 537-566.

(513) Balbierz, H. ; et al. 1962. Cumulation of $I^{131}$ in the thyroid after administration of methylthiouracil, vitamin A, and potassium bromide. Endokrynol. Polska 13, 81-6.

(514) Balcita, A. N. ; et al. 1954. Carotene, vitamin A, calcium, and inorganic phosphorus contents of the blood plasma of cattle and carabaos. Philippine Agr. 38, 388-91.

(515) Baldassi, G. 1947. A method of differential determination of vitamin A and carotenoids by spectrometry. Sperimentale 98, 321-5.

(516) Baldassi, G. 1946. Differential analysis of vitamin A and carotenoids of blood by the spectrophotometer. Atti Soc. Lombards Sci. Med. Biol. 1, 285-8.

(517) Baldwin, I. L. ; et al. 1947. What's new in farm science (annual report). Wisconsin Agr. Expt. Sta., Bull. 472, 1-60.

(518) Balena, A. 1940. Vitamin A and resistance to pulmonary tuberculosis. Brasil-Med. 54: 163-168.

(519) Balev, P. 1966. Effect of antibiotics on the vitamin A and Carotene contents of chick liver. Vet. Med. Nauki (Sofia) 3(3), 279-82.

(520) Balev, P., and V. Djidjeva. 1969. On the relationship between vitamin A and the assimilation of methionine and lysine in chicks. Vet Med Nauki 6(9): 53-56.

(521) Balke, E. ; et al. 1964. Adrenal activity of the white rat in vitamin A deficiency. Z. Ges. Exptl. Med. 138(2), 131-4.

(522) Ball, S. ; et al. 1948. Studies on vitamin A. V. The preparation of retinene$_1$-vitamin A aldehyde. Biochem. Jour. 42(4): 516-523.

(523) Ball, S. and R. A. Morton. 1949. Studies in vitamin A. X. Vitamin $A_1$ and retinene$_1$ in relation to photopic vision. Biochem. J. 45, 298-304.

(524) Ballschmieter, H. M. B. 1963. Persimmon. Fruchtsaft-Ind. 8, 284-9.

(525) Balsac, F. Heim de. 1933. Recent acquisitions regarding the biochemistry of cacao. Their importance to its production. Compt. Rend. Acad. Agr. France 19, 862-71.

(526) Balsamelli, Filippo. 1938. Comparative vitamin content of pasteurized, fresh and ripened cheese. Z. Vitaminforsch. 8. 136-44.

(527) Bamji, M. and H. R. Cama. 1962. Anhydrovitamin $A_2$ and rehydrovitamin $A_2$. II. J. Biol. Chem. 237(9):2747-2749.

(528) Bamji, Mahtab S., and P. R. Sundaresan. 1961. Effect of Thyroid activity on the absorption, storage and utilization of orally administered vitamin A aldehyde (retinal) in rats. Jour. Nutrition 74(1): 39-44.

(529) Bandemer, S. L. ; et al. 1958. The vitamin A content of fresh and stored shell eggs. Poultry Sci. 37(3)538-543.

(530) Bandemer, S. L. ; et al. 1958. Seasonal variations in the vitamin A content of hens' eggs. Jour Agric. and Food Chem. 6(7)' 549-552.

(531) Bandzhyulene, S. Yu., and A. A. Schmidt. 1967. The effect of vitamin A on lipoid content in the liver and on nucleic acid content in liver and spleen of rats infected with streptococcus. Izv Akad Nauk Latv SSR. 12: 111-118.

(532) Bandzhyulene, S. Yu., and A. A. Schmidt. 1967. Content of nucleic acids in liver and spleen of rats on abundant vitamin A diet. Latv. PSR Zinat. Akad. Vestis (4), 139-43.

(533) Banerjee, A. K. ; et al. 1956. Localization of alkaline phosphatase in certain skin diseases. Bull. Calcutta School Trop. Med. 4, 125.

(534) Banerjee, B. N. 1936. Vitamin A assay of ghee. III. Storage of ghee and vitamins. Agr. Live-stock India 6, 274-83.

(535) Banerjee, B. N. and N. N. Dastur. 1936. Vitamin A study of ghee. IV. Action of light on ghee. Agr. Live-stock India 6, 433-40.

(536) Banerjee, B. N. and N. N. Dastur. 1937. Vitamin-A study of ghee. V. Effect of heat and air on vitamin A. Agr. Live-stock India 7, 24-34.

(537) Banerjee, B. N. and N. N. Dastur. 1937. Vitamin A study of ghee. VI. Action of sunlight and a new test for detecting the development of rancidity. Agr. Live-stock India 7, 697-701.

(538) Banerjee, B. N. 1938. Vitamin A study of ghee. VII. Pro- and antibodies. Agr. Live-Stock India 8, 153-7.

(539) Banerjee, B. N. and G. B. Ramasarma. 1938. The vitamin A (carotene) and C content of mangoes. Agr. Live-stock India 8, 253-8.

(540) Banerjee, B. N. and S. D. Sunawala. 1936. Vitamin A assay of ghee. Agr. Live-stock India 6, 154-60.

(541) Banerjee, B. N. and S. D. Sunawala. 1935. Vitamin-A assay of ghee. Agr. Live-stock India 5, 382-8.

(542) Bang, B. G. and F. B. Bang. 1969. Replacement of virus-destroyed epithelium by keratinized squamous cells in vitamin A-deprived chickens. Proc. Soc. Exp. Biol. Med. 132(1): 50-56.

(543) Bang, G. ; et al. 1957. The effect of an excess of Vitamin A on oxygen consumption and $I^{131}$ metabolism in rats. Technical Rept. 57-39, 21 pages. Arctic Aeromedical Lab. Ladd AFB, Alaska.

(544) Bangham, A. D. ; et al. 1964. Studies on the mode of action of excess of vitamin A. 9. Penetration of lipid monolayers by compounds in the vitamin A series. Biochem J 90(1): 133-140.

(545) Bangham, A. D. 1964. Interactions producing injury or repair of cellular membranes. Ciba Found. Sump. Cellular Injury 167-81.

(546) Bangham, A. D. und R. W. Horne. 1962. Wirkung von Saponin auf biologische Zellmembranen. Nature (London) 196, 952-53.

(547) Bannes, N. 1946. The fat-soluble vitamins A, D, and E. Med. Klin. (Munich) 41, 401-7.

(548) Banning, L. K. Wolff and van Eekelen. 1936. Nutrition of various groups of families in the Netherlands. Quart. Bull. Health Organization League Nations 5, 566-70.

(549) Banyai, A. L. and A. V. Cadden. 1944. The rationale of the therapeutic administration of massive doses of vitamin A in tuberculosis diabetics. Diseases of the Chest 10, 133-44.

(550) Baptista, V. 1938. Avitaminosis in humans. Sao Paulo 9: 412-442.

(551) Barabanshchikov, N. and N. Frolova. 1953. Vitamin A in mare milk. Konevodstvo No. 4, 43-5.

(552) Barber, R. S. ; et al. 1953. Antibiotics in the diet of the fattening pig. Brit. J. Nutrition 7, 306-19.

(553) Barber, M. S. et. al. 1960. Untersuchungen der kernmagnetischen Resonanz. I Mitt. Methylgruppen von Carotinoiden und verwandten Verbindungen. J. Chem. Soc. (London) 2870-2881.

(554) Barbiroli, G. 1967. Simultaneous determination of twelve vitamins by circular paper chromatography. Minerva Dietol. 7(4) 257-8.

(555) Barenberg, L. H., and J. M. Lewis. 1932. Relationship of vitamin A to respiratory infections in infants. Jour. Amer. Med. Assoc. 98(3) : 199-202.

(556) Barenblat, I. G. 1947. Vitamins, their significance and use. Meditsin. Sestra. No. 5, 3-6.

(557) Bargoni, N. et. al. 1953. Influence of tocopherol and vitamin A on some of the liver enzymes of rats on protein-deficient diet. Boll. Soc. Ital. Biol. Sper. 29:1144-1146.

(558) Barker, S. A. ; et al. 1964. The effect of vitamin A, hydrocortisone, and citral on sulfate metabolism in skin. Exptl. Cell Res. 35(2), 255-61.

(559) Barker, S. B. ; et al. 1951. Further studies on anti-thyroxine effec ts of various compounds. Proc. Soc. Exptl. Biol. and Med. 78(3): 840-845.

(560) Barker, S. A., and J. F. Kennedy. 1969. Induced effects upon the sulphate metabolism of the acidic mucopolysaccharides of human skin. 11(1):27-31.

(561) Barlow, O. W. 1927. Studies on the anemia of rice disease. The effects produced by the addition of betaine hydrochloride, Lactose, vitamins A and C, magnesium sulphate or mineral oil to the polished rice diet of pigeons. Amer. Jour. Physiol. 83(1): 237-244.

(562) Barlow, O. W. and Hugo Kocher. 1942. Utilization by the rat of vitamin A administered perorally and intramuscularly. Am. J. Physiol. 137 : 213-16.

(563) Barnes, Ben C. ; et al. 1950. The comparative absorption of vitamin A from a water miscible and an oily preparation by normal human adults and patients with steatorrhea. J. Clin. Invest. 29 : 982-7.

(564) Barnes, A. C. 1951. The placental metabolism of vitamin A. Am. J. Obstet. Gynecol. 61 368-72.

(565) Barnes, W. C. 1936. Effects of some environmental factors on growth and color of carrots. Agr. Expt. Sta., Mem. 186: 36

(566) Barnett, H. M. 1946. Carotene extraction. U. S. 2, 412, 707.

(567) Barnett, H. M. 1941. Carotene-a source of vitamin A during our national emergency. Indust. and Engineer. Chem. News Ed. 19(14):778.

(568) Barnett, K. C. 1970. Ocular changes associated with hypovitaminosis A in cattle. Br. Vet. J. 126:561-73.

(569) Barnholdt, B. 1958. Spectrophotometric determination of vitamin A (and carotene) in margarine containing sesame oil. Intern. Z. Vitamin-forsch. 28 : 365-86.

(570) Barnholdt, B. 1957. Formation of anhydrovitamin $A_1$ in the study of vitamin $A_1$ isomers. Acta Chem. Scand. 11 : 909-11.

(571) Barnholdt, B. and W. Hjarde. 1956. Chromatographic separation of two vitamin $A_2$ isomers. Acta Chem. Scand. 10 : 1635-48.

(572) Barnholdt, B. und Willy Hjarde. 1957. Chromatographische Trennung von 5 Vitamin-$A_1$ Isomeren aus den Augen der Tiefsee-Steingarnele (Pandalus Borealis) wurde chromatograph. Acta Physiol. Scand. 41: 49-67.

(573) Barnicot, N. A. and S. P. Datta. 1956. Vitamin A and bone. In-"The Biochemistry and Physiology of Bone" Geoffrey H. Bourne-Editor. Academic Press Inc. N. Y. C. 507-538.

(574) Barnicot, N. A. 1951. Die likale Wirkung von Calciferol und Ostradiol am Knochen. J. Anatomy 85:120-134.

(575) Barnicot , N. A. 1950. The local action of vitamin A on bone. Jour. Anat. 84(4):374-387.

(576) Barnicot , N. A. 1948. Local action of calciferol and vitamin A on bone. Nature 162, 848-9.

(577) Barnicoat, C. R. 1947. Variations in the carotene and vitamin A contents of certain New Zealand butterfats. J. Dairy Research, 15 80-8.

(578) Barreiro and A. Charro. 1953. A nutritional study of the chestnut. Anales bromatol. (Madrid) 5 453-90.

(579) Barron, N. S. 1942. Vitamin A and its relationship to some of the more common diseases of farm animals. Vet. Rec. 54(3): 29-37.

(580) Barrow, M. V., and C. A. Rowland. 1969. Prolonged gestation in the rat and its usefulness in experimental teratology. Teratology 2(2): 125-135.

(581) Barssow, I. N. 1954. Die Vitamine der Milch und der Milchprodukte. Hyg. u. Sanitatswes.

(582) Bartel, H. 1949. Zur Atiologie des Herztodes der Schweine. Monatsh. Veterinarmed. 225-230.

(583) Barthelmess, A. ; et al. 1965. Food components as natural protective substances against x-ray-induced chromosome damage. Naturwissenschaften 52, 160-1.

(584) Barthelmess, A. ; et al. 1968. Cytogenetic investigations on natural antimutagenic protective agents for radiation diagnosis. radiotherapy and professional radiation exposure. Strahlentherapie - 136(1): 116-130.

(585) Barthen, C. L. and C. S. Leonard. 1937. Comparison of spectrophotometric and biologic assays. J. Am. Pharm. Asso. 26:515-524.

(586) Barthen, C. L. et. al. 1939. Collaborative investigation of spectrophotometric method for assay. J. Am. Pharm. Asso. 28:661-672.

(587) Bartoiozzi, G. et. al. 1967. Chronic hypervitaminosis A in infants, and children. Description of two cases and critical review of the literature. Riv. Clin. Pediat. 80:231-290.

(588) Bartolozzi, P. 1965. Action of vitamins A, Bl, C, D, E in acute experimental diphtherial intoxication Otorinolaring Ital 34:33-52.

(589) Barton, P. G. ; et al. 1965. Factors concerned in the specificity of absorption and transport of lipids. Biochem. J. 96(2):

(590) Bartos, V. and J. Groh. 1969. Beta-carotene, vitamin A and vitamin E serum levels in patients with chronic pancreatitis. Cesk Gastroenterol Vyziva 22(3): 149-154.

(591) Bartz, J. P. and Francis O. Schmitt. 1936. Carotene and associated pigments in medullated nerve. Am. J. Physiol. 117, 280-4.

(592) 4) Barua, R. K. and P. G. Nayar. 1966. Naturally occurring anhydrovitamin $A_2$. Transformation into retinine$_2$. Biochem. J. 101 : 302-7.

(593) Barua, R. K. and P. C. Nayar. 1964. Vitamin $A_2$ in den leberolen von Siifwasserfischen Nordostindiens. Indian J. Chem. 2 : 254-55.

(594) Barua, R. K. and M. V. K. Rao. 1964. Spectrophotometric determination of vitamin D in the presence of vitamin A. Analyst 89(1061): 534-7.

(595) Barua, R. K. and M. V. K. Rao. 1965. Schnellmethode zur quantitativen Trennung des Vitamins D von Vitamin A. Analyst 90: 571-74.

(596) Barua, R. K. und A. B. Barua. 1963. Oxydation von beta-Carotin: Bildung von Vitamin-A-Saure Nature, (London) 197: 594.

(597) Baruffini, A. und E. Cingolani. 1960. Stabilitat und Stabilisierung von Vitamin A in Suppositorien. (Farmaco (Pavia), Ediz. prat. 15: 732-43.

(598) Baschieri, L. and F. Ferri. 1951. Thyrotropic hormone. III-Thyrotropic hormone and diiodothyroxine. Folia Endocrinol. (Pisa) 4:451 - 458.

Baschieri, L. and F. Ferri. 1951. IV. Thyrotropic hormone and antixerophthalmic vitamin. Ibid. 461-468.

(599) Bass, M. H.and J. Caplan. 1955. Deficiency in infancy.-Vitamin A. J. Pediat. 47:690-695.

(600) Bass, M. H.and G. R. Fisch. 1961. Increased intracranial pressure with bulging fontanel. A sympton of vitamin A deficiency in infants. Neurology (Minneap) 11:1091-4.

(601) Bassett, B. E. and L. Packer. 1965. Response of isolated lysosomes to vitamin A. J. Cell. Biol. 27(2): 448-450.

(602) Bassett, C. F. ; et al. 1946. Urinary calculi associated with vitamin A deficiency in the fox. Cornell Vet. 36(1):5-16.

(603) Bassett, C. F. ; et al. 1946. A comparison of carotene and vitamin A utilization by the fox. Cornell Vet. 36(1): 16-24.

(604) Bassett, C. F. ; et al. 1948. The vitamin A requirement for growth of foxes and minks as influenced by ascorbic acid and potatoes. J. Nutrition 35: 629-38.

(605) Bastagli. D. 1944. Effects of sex hormones on vitamin metabolism. Gior. di Clin. Med. 25: 179-187.

(606) Basu, N. K. 1933. Tuberculosis and the deficiency of vitamin A in the diets of the young children in India. Zeitschr. Vitaminforsch. 2(3): 190-193.

(607) Basu, N. K. 1937. Resorption of vitamin A from the intestine depends upon the simultaneous presence of a suitable fat or oil. With rats as exptl. animals. Z. Vitaminforsch. 6: 106-10.

(608) Basu, N. K. 1934. Sunlight as an important aid in the action of vitamins in the system. Z. Vitaminforsch. 3: 254-6.

(609) Basu, N. K. 1934. Sterine als Quelle fur Vitamin A. (Biochem. Z. 274: 4-6. 18/10.

(610) Basu, U. P. 1948. Extraction of vitamin A from shark-liver oil. Indian J. Pharm. 10, (2):37-9.

(611) Basu, U. P. 1939. Katalysatoren der Nahrung. Sci. and Cult. 4: 410-15.

(612) Basu, U. P. and J. C. Sen Gupta. 1941. On the stability of vitaminised oil. Current Sci. 10(6): 288-289.

(613) Basu, U. P. and S. K. Sen Gupta. 1948. Fortification of edible fat with vitamin A. J. Am. Chem. Soc. 70: 413.

(614) Basu, U. P., and N. Ray. 1947. Effect of sesame oil on 'vegetable ghee' fortified with vitamin A. Sci. and Culture 13(2): 73-74.

(615) Basu, K. P. and H. N. De. 1948. Role of vitamins in the metabolism of calcium, magnesium and phosphorous in human subjects. Ann. Biochem. and Exptl. Med. (India) 8: 127-36.

(616) Basu. U. P. and S. Bhattacharya. 1949. Stability of vitamin A. Science and Culture 14:481-482.

(617) Basu, K. P. and H. N. De. 1938. Nutritional investigation of species of Bengal fish: determination of vitamin A contents' of liver and body oils of ruhee. Indian J. Med. Res. 26:197-203.

(618) Basu, K. P. ; et. al. 1940. Vitamin-A content of some species of Bengal fish by biological, tintometric, and spectroscopic methods. Indian Jour. Med. Res. 27(3): 721-730.

(619) Basu, N. M. ; et al. 1947. A preliminary report on the rheobase and chronaxie values in vitamin A and vitamin B deficient animals. Indian Jour. Physiol. and Allied Sci. 1(2): 29-30.

(620) Basu, N. M., and N. K. De. 1941. Storage of vitamin A in liver under different conditions of protein and carbohydrate intake. Sci. and Culture 6(11): 672-673.

(621) Basu, N. M. and N. K. De. 1941. Assessment of vitamin A deficiency among Bengalese and determination of the minimal and optimal requirements of vitamin A by a simplified method for measuring visual adaptation in the dark. Indian J. Med. Research 29: 591-612.

(622) Batchelder, E. L. 1932. The vitamin content of Washington-grown fruits. Wash. State Hort. Assoc., Proc. 28th Ann. Mtg. 177-80.

(623) Batchelder, E. L. 1929. The effect of successive diminutions of Vitamin A in the food on the nutrition and vitality of albino rats. Dissertation, Columbia Univ.; N. Y. C.

(624) Batchelder, E. L. 1934. Nutritional significance of vitamin A throughout the life cycle. Am. J. Physiol. 109: 430-5.

(625) Batchelder, E. L. and J. C. Ebbs. 1942. Vitamin A metabolism and requirements as determined by the rhodometer. Bull. Rhode Island Agric. Exp. Sta. 286: 1-24.

(626) Batchelder, E. L., and J. C. Ebbs. 1944. Some observations of dark adaptation in man and their bearing on the problem of human requirement for vitamin A. Jour. Nutrition 27(4): 295-302.

(627) Batchelder, E. L. ; et al. 1935. Vitamin A and C content of frozen blackberries. J. Am. Dietetic Assoc. 11: 115-18.

(628) Batista, F. M. ; et al. 1969. Serum levels of vitamin A and carotene in different age groups. Hospital(Rio ) 76:489-494.

(629) Batham, E. ; et al. 1951. Preformed vitamin A in marine crustacea. Bio. Chem. J. 48(1): 10-11.

(630) Batty, J. W. ; et al. 1938. Die Einwirkung des Oppenauerreagenses auf primare Alkohole einschlieblich Vitamin A. J. Chem. Soc. (London) 175-79.

(631) Bauce, A. 1941. Influence of Vitamin and nicotinic acid on external pancreatic secretion. Gazz. D. Osp. 62: 209-212).

(632) Baude, P.and L. Deglaude. 1924. Influence of vitamin A deficiency on heart. Comp. Rend. Soc. de. Biol. 91:1116-1118.

(633) Bauer, H. R. 1950. Ferkelsterblichkeit und blindgeborenes Ferkel infolge A-Avitaminose. Tierarztl. Umschau 5: 366-68.

(634) Bauer, Oskar. 1937. Vitamine und Haltbarmachung der Lebensmittel. Dtsch. Lebensmittel-Rdsch. 189-93.

(635) Bauereisen, Erich. 1938. Effects of vitamin A on the liver glycogen. Z. Ges. Exptl Med. 103: 145-52.

(636) Bauereisen, E. 1939. Influence of insulin oncarotene-vitamin A content of liver. Endokrinologie 21: 247-252.

(637) Bauernfeind, J. C.; et al. 1970. Biopharmaceutics of vitamin A injection. Bull. Parenteral Drug. Asso. 24:169-75.

(638) Bauernfeind, J. C., and L. E. Allen. 1963. Vitamin A and D enrichment of nonfat dry milk. Jour. Dairy Sci. 46(3):245-254.

(639) Bauernfeind, J. C., and G. K. Parman. 1964. Restoration of nonfat dry milk with vitamin A. Food Technol. 18(2): 52-57.

(640) Bauernfeind, J. C.; et al. 1953. Synthetic vitamin A aids food fortification. Food Eng. 25 (6): 81-2, 85, 87.

(641) Baum, W. S. and A. B. McCoord. 1940. Relationship between biophotometer tests and vitamin content of blood of children. J. Pediat. 16:409-418.

(642) Baumann. C. A.; et. al. 1934. Fat soluble vitamins. XL The Growth Method of determining Vitamin A. Zeitschr. Vitaminforsch. 3(2):81-89.

(643) Baumann, C. A.; et. al. 1934. Fat soluble vitamins. XLII. The absorption and storage of vitamin A in the rat. J. Biol. Chem. 107(3): 705-715.

(644) Baumann, A. 1939. Changes in epithelium of pancreatic duct of rats subjected to deficient diet. Frankfurt, Ztschr. f. Path. 53:551-558.

(645) Baumann, C. A. 1953. Fat-soluble vitamins. Ann. Rev. Biochem. 22: 527-44.

(646) Baumann, C. A.; et al. 1942. The effect of dibenzanthracene, of alcohol, and of other agents on vitamin A in the rat. Jour. Biol. Chem. 142(2): 597-608.

(647) Baumann, C. A.; et al. 1941. Effect of certain carcinogens on vitamin in liver. J. Nutrition 21: 431-444.

(648) Baumann, C. A.; et al. 1939. The determination of vitamin A in the hen's egg. Poultry Sci. 18(1): 48-53.

(649) Baumann, C. A. and T. Moore. 1939. Thyroxin and hypervitaminosis-A. Biochem. Jour. 33(10): 1639-1644.

(650) Baumann, C. A. and H. Steenbock. 1933. Fat-soluble vitamins: carotene and vitamin content of butter. J. Biol. Chem. 101: 547-560.

(651) Baumann, C. A.; et. al. 1934. Fat soluable vitamins. XXXIX The influence of breed and diet of cows on the carotene and vitamin A contents of butter. J. Biol. Chem. 105:167-176.

(652) Baumann, C. A. and H. Steenbock. 1932. The vaginal smear method of determining vitamin A. Science 76(1975). :417-420.

(653) Baumann, C. A. and H. Steenbock. 1934. Fat-soluble vitamins XXXV. The ophthalmogenic properties of certain rations low in vitamin A. J. Nutrition. 7:41-50.

(654) Baume, L. J. 1969. Effects of vitamin A deficiency on the calcification of enamel and dentin in the upper incisor of the white rat: a comparative histological and microradiographic study. J. Canad. Dent. Asso. 35: 538-98.

(655) Baume, L. J. 1970. Differential response of condylar, epiphyseal synchondrotic, and articular cartilages of the rat to varying levels of vitamin A. Its impact oncurrent growth concepts. Am. J. Orthod. 56: 537-51.

(656) Baume, J. L. et al. 1970. Some histological and histochemical observations in the oral epithelium of vitamin A deficient rats and rats receiving high doses of vitamin A. Int. Z. Vitaminforsch 40:471-82.

(657) Baume, L. J.; et al. 1970. The effects of prolonged vitamin A deficiency and excess of vitamin A on the development of the tibia in the white rat. Heiv Odontoi Acta. 14:80-7.

(658) Baume, L. J. ; et al. 1970. The mandibular joint of the rat undergoing increasingly prolonged vitamin A deficiencies and an A hypervitaminosis. Rev. Stomat. (Paris) 71:17-26.

(659) Baume, L. J. and A. M. Frandsen. 1953. Phase contrast microscope study of oral epithelium of normal and vitamin A-deficient rats. Proc. Soc. Exptl. Biol. and Med. 83(2): 356-360.

(660) Baura, R. K. and P. C. Nayar. 1964. Vitamin $A_2$ in the liver oils of freshwater fishes of northeastern Indian J. Chem. 2(6), 254-5.

(661) Bavetta, L. A. : et al. 1958. Effects of growth hormone on the bone and periodontium of vitamin A-depleted rats. Arch. Pathol. 66(5): 610-617.

(662) Baver, L. D. 1946. Research and farming (annual report). N. Carolina Agr. Expt. Sta., Ann. Rept. 69: 9-133.

(663) Bayfield, R. F. 1971. Colorimetric determination of vitamin A with trichloroacetic acid. Analytical Biochemistry 39 (2):282-87.

(664) Bazin, S. and A. Delaunay. 1966. Collagenolytic activity of normal and inflammatory tissues. Biochim, Physiol. Tissu. Conjonclif, Conf. Commun. Symp. Int., Lyon. 569-78.

*(665) Bazin, S. ; et al. 1966. Influence of hypervitaminosis A on the constitution of the connective tissue and on the collagenolytic activity of normal or inflamed tissue. Ann. Inst. Pasteur 110(4): 487-96.

(666) Beach, Eliot F. 1946. Chemical evaluation of nutritional state and its application to public health problems. Michigan Publ. Health 34 (12): 227; 234.

(667) Beal, V. A. 1956. Nutritional intake of children. IV. Vitamins A and D and ascorbic acid. J. Nutrition 60: 335-47.

(668) Beal, V. A. ; et al. 1945. Nutrition studies on children living at home. I. Calorie intakes on the basis of age from one through ten years. Am. J. Diseases Children 70: 214-19.

(669) Bean, Wm. B. ; et al. 1951. Absorption studies with portal anastomotic veins. J. Clin. Invest. 30: 263-73.

(670) Beard H. H. 1926. Nutrition of the white mouse. I. The normal growth and nutritive requirements. Am. J. Physiol. 75: 645-57.

(671) Beare, J. L. ; et al. 1959. Ein Vergieich der Ausnutzung von Rapssamenol und Maisol durch die Ratte. Canad. J. Biochem. Physiol. 37: 613-21.

(672) Bearse, G. E. ; et al. 1960. Blood spot incidence in chicken eggs and vitamin A level of the diet. Poultry Sci. 39(4): 860-865.

(673) Beaumont, J. H. 1948. Report of University of Hawaii Agricultural Experiment Station. Hawaii Agr. Expt. Sta., Biennial Rept. 1946/48: 5-170.

(674) Beaumont, J. L. 1960. Lipid Metabolism in coronary atherosclerosis. Colloqu. Intern. Cholesterol, Livre Rappt., Paris. 45-53.

(675) Beaumont, J. L. 1960. Hypervitaminemia A induced by oral route. Its relation to the daily development of the optical density of the serum. Rev. Franc EtudesClin. Biol. 5 :190-3.

(676) Beaumont, J. L. and R. Ardaillou. 1959. Testing of induced high levels of vitamin A in the blood. Rev. Franc. Etudes Clin. et Biol. 4 : 40-3.

(677) Beaumont, J. L. and Beaumont V: 1960. Hypervitaminemia A induced by oral route and metabolism of chylomicrons. 1. The blood transport of absorbed vitamin A. Rev. Franc Etudes Clin. Biol. 5:593-7.

(678) Beaumont, J. L.andV. Beaumont. 1960. Hypervitaminenia A induced by oral route and metabolism of Chylomicrons. 2. The passage of ingested vitamin A into a chylothorax. Rev Franc Etudes Clin Biol.5:598-9.

(679) Beaumont, J. L. and V. Beaumont. 1962. The initial postprandial phase of the metabolism of lipids in coronary atherosclerosis. Pathol. Biol., Semaine Hop.10: 281-6.

(680) Beaumont, J. L. and V. Beaumont. 1960. Vitamin A. Tolerance test, fat metabolism disturbances, and antilipemic drugs. Drugs affecting Lipid Metab., Proc. Symp., Milan. 361-72.

(681) Beaumont, V. ; et al. 1958. Metabolism of lipides in human atherosclerosis. I. Cholesterolemia. Tests with phenol and dextran sulfate in 1000 cardiac cases. Rev. Franc. Etudes Clin. et Biol. 3: 746-54.

(682) Beaumont, J. L. ; et al. 1965. Postprandial hyperlipemia and hyperlipidemia in atherosclerotic diseases. J. Atherosclerosis Res. 5(2): 125-34.

(683) Beaver, D. L. 1961. Vitamin A deficiency in the germ-free rat. Amer. Jour. Pathol. 38(3): 335-357.

(684) Bechtel, H. E. & C. A. Hoppert. 1936. Seasonal variation in normal cow's milk. J. Nutrition 11:537-549.

(685) Beck, S. and P. R. Peacock. 1941. Gastropapillomatosis from Vitamin A deficiency. Brit. Med. J. 2: 81-3.

(686) Becker, E. and B. v. Hangai-Szabo'. 1936. Action of flourtreating substances on the animal organism. Z. Untersuch. Lebensm. 71: 521-528.

(687) Becker, J. E. 1939. Vitamin A-Recent research. J. Am. Dietet. Assoc. 15: 875-884.

(688) Becker, J. 1939. The preparation of vitamin-rich foods with special consideration of canned fruits and vegetables. Congr. Intern. Tech. Chim. Ind. Agr., Compt. Rend., Vl Congr., Budapest. 1: 29-33.

* (689) Becker, N. H. and C. H. Sutton. 1963. Pathologic features of the choroid plexus. I. Cytochemical effects of hypervitaminosis A. Am. J. Pathol. 43(6): 1017-1030.

(690) Becker, W. and C. Klotzsche. 1955. Hypervitaminosis. Arztl. Wchnschr. 10: 545-550.

(691) Beckmann, R. 1956. Uber Vitamin E. (Tocopherol), seine Beziehungen zu anderen Vitaminen und uber Antivitamine E. Aerztl. Wschr. 11: 361-367.

(692) Becks, H. 1942. Dangerous effects of vitamin D. overdosage on dental and paradental structures. J. Am. Dental Assoc. 29: 1947-1968.

(693) Becze, J. and S. Holdas. 1962. Effect of vitamin A on reproduction processes of hogs. Magy. Allatorv. Lapja. 17: 251-253.

(694) Bedson, S. P. and S. S. Zilva. 1923. Influence of vitamin A on blood platelets of rats. Brit. J. Exper. Path. 4: 5-12.

(695) Bedson, S. P. and S. S. Zilva. 1923. Platelet count in rats suffering from vitamin A deficiency. Brit. J. Exper. Path. 4: 305-310.

(696) Bedson, S. P. and S. S. Zilva. 1923. Die Blutplattchenzahl bei Ratten unter Mangel an Vitamin A. Ber. Ges. Physiol. 30: 569-570.

(697) Beeler, D. A. 1962. Cholesterol metabolism and atherosclerosis in the rat: Effects of linoleate and the vitamin A and E. Dissert. Absts. 23(2): 415-416.

(698) Beeler, D. A.; et al. 1962. Effects of levels of certain dietary lipids on plasma cholesterol and atherosclerosis in the chick. J. Nutr. 78(2): 184-8.

(699) Beerman, H. und H. L. Colburn. 1956. Einige Ansichten zur Pigmentierung der Haut. Amer. J. Med. Sci. 231: 451-75.

(700) Beeson, W. M. 1934. Influence of breed and ration on the carotene and vitamin A contents of milk. Am. Soc. Animal Production. Rec. Proc. 27th Ann. Meeting. 54-6.

(701) Beeson, W. M. ; et al. 1965. Effect of different levels of vitamin A on the performance of Hereford and Charolais x Hereford heifers self-fed on blue-grass pasture. Purdue Univ., Agr. Expt. Sta., Res. Progr. Rept. No. 169: 5 pp.

(702) Beeson, W. M. 1965. Relative potencies of vitamin A and carotene for animals. Federation Proc. 24(4), Pt. 1: 924-6.

(703) Begum, A., and T. R. Ittyerah. 1970. Arylsulfatase and beta-glucuronidase activity in serum in kwashiorkor. Clin. Chim. Acta. 28(2): 263-268.

(704) Begum, A. and J. Prathapkumar. 1969. Effect of vitamin A on cholinesterase activity in normal children and in children with protein-calorie malnutrition. Clin. Chim. Acta. 26(2): 343-349.

(705) Beher, W. T. and O. H. Gaebler. 1950. Observations on niacin, riboflavin. allantoin, ascorbic acid, and vitamin A during anabolism induced by hormones. J. Nutrition 41: 447-57.

(706) Behrens, H. 1965. Absorption of oil- and water-soluble vitamin A preparations in suckling pigs. Prakt. Tierzart 46(6): 251-3.

(707) Behrens, H. 1966. Vitamin A determinations in dead piglets. Deut. Tieraerztl. Wochschr. 73(11): 255-7.

(708) Behrens, H. 1965. Vitamin A deficiency in piglets with seborrheic eczema. Deutsch Tieraerztl Wochschr. 72:386-8.

(709) Behrens, H. 1971. Vitamin A and E determinations in slaughter pigs. Dtsch. Tieraerztl Wochenschr. 78:153-6.

(710) Behrens, H. ; et al. 1967. Application of the highly concentrated multi-vitamin preparation Injacom-ADE in veterinary practice. Tieraerztl. Umsch. 22(2): 91-6.

(711) Behrnts, H. and O. Wanscher. 1946. Influence of experimental peroral alcohol intoxication on deposit and resorption of vitamin. Nord. med. 31: 1811-1816.

(712) Behrnts, J. H., og K. Swanhof. 1940. Undergeiser over Indholdet af Vitamin-A-virksomme Forbindelser i danske Naeringsmidler. IV Meddelelse. Leverpostej som Vitamin-A-Kilde. Nordisk Hyg. Tidskr. 21: 57-62.

(713) Belaja, Ju. A. und B. I. Janovskaja. 1967. Bedeutung des Mangels an Vitamin und Eiweif bei Dysenterie. Z. Mikrobiol., Epidemiol. Immunobiol. 44, (3):136.

(714) Belanger, L. F. 1967. Alpharadiographic and histological observations on the skeletal effects of hypervitaminoses A and D in the rat. Anat. Rec. 158: 443-51.

(715) Belanger, L. F. and Irwin Clark. 1964. Alpharadiographic and histological observations on the skeletal effects of hypo- and hypervitaminoses A and D in the rat. AEC Accession No. 16148, Report No. NYO-2779-9.

(716) Belasco, I. J. & J. R. Murlin. 1940. Effect of vitamins A and C on experimental hyperthyroidism. J. Nutrition 20:577-588.

(717) Belavady, B. und. S. C. Balsubramanian. 1959. Nahrwert einiger indischer Fruchte und Gemusearten. Indian J. Agric. Sci. 29: 151-63.

(718) Belavady, B. und C. Gopalan. 1960. Der Einflus von Diatzusatzen auf die Zusammensetzung der Muttermilch. Indian J. med. Res. 48: 518-23.

(719) Belg. A. S. 1963. Egema, Paris. Frankreich, Arzneimittel zur Senkung des Cholesterin-Blutspiegels, enthaltend 3.5. Dijod-4-(3'-jod-4'-hydroxyphenoxy)-phenylessigsäure.

*(720) Bell, J. G. 1971. Separation of oil-soluble vitamins by partition chromatography on Sephadex LH20. Chemistry and Industry 7: 201-02.

(721) Bell, M. E.; et al. 1933. Studies of alleged toxic action of cod liver oil and concentrates of vitamin A. Ztschr. Vitaminforsch. 2: 161-182.

(722) Bella Di, Luigi. 1941. Action of carotene on blood sugar in various animals. Boll. soc. ital. biol. sper. 16: 351-2.

(723) Bella Di. Luigi. 1943. Transformation of carotene into vitamin A and the action of carotene and vitamin A on the glycemia of various animals. Arch. sci. biol. (Italy) 29: 301-34.

(724) Bella, Luigi Di. 1943. Importanza della tiroide nell'azione biologica del carotene e dell'axerottolo. Arch Sci. Biol. 30(1/2): 1-8.

(725) Belelli, L.; et al. 1955. Blood curve of vitamin A in patients with lambliasis. Arch. ital. sci. med. trop. e parassitol. 36: 342-53.

(726) Belen'kii, N. and E. Sakharova. 1939. Orach as a source of Vitamin A. Sovet. Ptitsevodstvo. No. 5, 27-8.

(727) Belikov, N. F. and B. M. Protserov. 1944. Vitamin A content of fishes of the Amur basin. Biokhimya. 9: 369-75.

(728) Benchimol, N. B. 1952. Vulvar leukoplakia and Vitamin A. Rev. brasil. cir. 24: 863-864.

(729) Bencze, B. ; et al. 1959. Vitamin A metabolism in atrophic infants Z. Kinderheilk, 82: 256-70.

(730) Bencze, B. 1949. Die Bestimmung von Carotinoiden mit Vitamin A-Wirkung mittels der chromatographischen Analyse. Z. Analyt. Chem. 129: 246-53.

(731) Bender, A. E. 1969. Problems of human protein nutrition. Royal Society of Health Journal. 89, (5): 221-26.

(732) Bender, R. C. and G. C. Supplee. 1933. Vitamin A content of milk irradiated by various carbon arcs. Am. J. Dis. Child 45:995-998.

(733) Benedek, Thomas G. 1962. Goiter formation as a result of therapy with phenylbutazone and vitamin A. Jour. Clin. Endocrinol. and Metab. 22(10): 959-962.

(734) Benedek, Thomas G. 1962. Goiter formation as a result of therapy with phenylbutazone and vitamin A. Jour. Clin. Endocrinol and Metab. 22(10): 959-962.

(735) Benedek, Tibor. 1959. Skin manifestations of hypovitaminosis A. Intern. Z. Vitaminforsch. 30: 10-36.

(736) Benedek, Tibor. 1958. Preeminent role of vitamin A metabolism in rheumatoid arthritis, peripheral and spinal, and in psoriasis. Acta Rheumatol. Scand. 4: 178-92.

(737) Benedetto, R. J. Di. 1967. Chronic hypervitaminosis A in an adult. J. Amer. Med. Assoc. 201: 700-2.

(738) Benham, G. H. 1943. Vitamin A and new-born pigs. Canadian Jour Comp. Med. 7(10): 291-297.

(739) Benham, G. H. 1944. Antimony trichloride method for determination. Canad. J. Research Sect. B. 22:21-31.

(740) Benham, G. H. 1944. $SbCl_3$ method for the determination vitamin A. Can. J. Research 22B, No. 2: 21-31.

(741) Benk, E. 1958. Vitaminhaltige Likore and vitaminisierte Spirituosen. Alkohol-Ind. 71: 17-20.

(742) Bennett, Mildred J. 1967. Vitamin A, vitamin E, and lipids in serum of children with cystic fibrosis or congenital heart defects compared with normal children. Amer. J. Clin Nutr. 20(5): 415-421.

(743) Bennett, L. R. ; et al. Absorption and distribution of vitamin A in x-irradiated rats. Proc. Soc. Exptl. Biol. Med. 74 439-43.

(744) Bennet, H. E. ; et al. 1950. Crocodile oil from Tanganyika. Colonial Plant and Animal Prod. 1(4): 315-318.

(745) Benterud, Arne. 1962. Stability of vitamin A in concentrates and in vitaminized foodstuffs. Acta Polytech. Scand. No. 16. Chem. Met. Ser. 21: 70-4.

(746) Benterud, Arne. 1961. The storage stability of vitamin A in concentrates and fortified foods. Rappt. Nord. Fetthar skningssymp. 3., Sandefjord, Norway. 133-44.

(747) Bentley, L. S. and A. F. Morgan. 1945. Vitamin A and carotene in nutrition of guinea pig. J. Nutrition. 30: 159-168.

(748) Bentley, L. S and A. F. Morgan. 1946. Influence of choline and of trypan blue upon utilization of carotene and vitamin A for liver storage of vitamin A. J. Nutrition 31:333-346.

(749) Bentley, R. ; et al. 1965. Anwendung des chemischen Abbavs von Coenzym Q auf Probleme der Biosynthese. Biochemistry 4: 166-76 .

(750) Berdjis, C. C. 1963. Hypervitaminosis A and mast cells. A study of the interrelationship of mast cells and vitamin A in vivo and in vitro. Acta Vitaminol. 17(1): 3-10.

* (751) Berdjis, C. C. 1958. Late effects of hypervitaminosis A in the rat. A.M.A. Arch. Pathol. 66: 278-81.

* (752) Berdjis, C. C. 1959. Hypervitaminosis A and Hyperparathyroidism. A.M.A. Arch. Pathol. 67: 355-63.

* (753) Berdjis, C. C. and James F. Rinehart. 1958. Fibroosteoclasia in the rat and guinea pig following excessive administration of vitamin A. Acta Vitaminol. 12: 49-57.

(754) Beresford, W. A. 1969. Vitamin A-deficiency and cartilage in healing skull fractures of rats. Experientia.25(4):383-4.

(755) Beresowskaja, N. N. ; et al. Ein Versuch zur Vitamisierung der Nahrung in Anstalten fur Gemeinschaftsverpflegung. Fragen d. Frnahr. 15, Nr. 5: 37-42.

(756) Bereston, E. S. 1954. Vitamins in dermatology. Jour. Clin. Nutrition 2(2): 133-139

(757) Berezovskaya, N. N. ; et al. 1956. Vitaminization of meals in public restaurants. Voprosy Pitaniya 15: No. 5, 37-42.

(758) Berge, S. 1941. The inheritance of paralysed hind limbs, scrotal hernia and atresia ani in pigs. Jour. Heredity.32 (8); 271-274.

(759) Bergen, S. S. Jr. ; et al. 1965. Hypervitaminosis A: report of a case. Amer. J. Clin Nutr. 16: 265-9.

(760) Berger, P. 1950. Uber das Vorhandensein von Carotinoiden in der kernen der Retinazellen. C. R. Seances Soc. Biol. Filiales 144. 606-07.

(761) Berger, St. and B. Pardo. 1964. The effect of lysine supplementation to gluten on the beta-carotene conversion into Vitamin A. Poland Zeszyty Nauk. Szkoly Glownej Gospodarst. Wiejskiego Warszawie, Technol. Rolno- Spozywcza. No. 3: 65-72.

(762) Berger, St. ; et al. 1966. Verwertung des aus dem Kaseinkomplex, "in vitro" gewonnenen Vitamins A. Roczniki Technol. Chem. Zywnosci.12: 157-66.

(763) Berger, S. and P. Segal. 1955. Mutual dependence of dark adaptation and vitamin A level in blood serum. Roczniki Panstwowego Zakladu Hig. 6: 47-54.

(764) Berges, D.; et al. 1959. The effect of heleniens (xanthophylis) and Vitamin A on the primary action of seeing. 3. A flame photometer determination for calcium and sodium in the retina. Zeitschr. Biol. 111(3): 220-227.

(765) Berglund, H. ; et al. 1929. Deficiency anemia in Chinese, responding to cod liver oil. Proc. Soc. Exper. Biol & Med. 26: 418-21.

(766) Berl, S. and W. H. Peterson. 1945. Distribution of carotene and vitamin A in buttermaking. J. Dairy Sci. 28: 103-7.

(767) Berl, S. and W. H. Peterson. 1943. Determination and content of carotene and vitamin A. in Wisconsin butter. Jour. Nutrition. 26(5): 527-538.

(768) Berliner, M. L. 1942. Regarding early detection of avitaminosis by gross or biomicroscopic examination of conjunctiva. Am. J. Ophth. 25: 302-308.

(769) Bern, H. A. ; et al. 1957. Cytochemical studies of keratin formation and of epithelial metaplasia in the rodent vagina and prostate. Jour. Histochem. and Cytochem. 5(2): 105-119.

(770) Bern, H. A. 1952. Alkaline phosphatase activity in epithelial metaplasia. Cancer Res. 12(2): 85-91.

* (771) Bern, H. A. ; et al. 1955. The influence of vitamin A on the epidermis. Am. J. Anat. 96(3): 419-448.

* (772) Bern, H. A. and Donald J. Lawrence. 1962. Influence of vitamin A on keratinization. In: Fundamentals of keratinization. Publ. Amer. Assoc. Advance. Sci. 70: 95-112.

(773) Bernard, R. A. ; et al. 1962. The reversible effect of vitamin A deficiency on taste. In: 46th Annuel Meeting, Atlantic City, N. J. Fed. Proc. 21(2): 362.

* (774) Bernard, R. A. and Bruce P. Halpern. 1968. Taste changes in vitamin A deficiency. J. Gen. Physiol. 52(3): 444-464.

(775) Bernard, R. A. ; et al. 1961. Effect of vitamin A deficiency on taste. Proc. Soc. Exptl. Biol. Med. 108; 784-6.

(776) Bernardie, A. M. de la. 1939. Über das Bestehen eines Antagonismus zwischen Thyroxin und den Vitaminen. C. R. Hebd. Seances Acad. Sci. 208: 1170-79.

(777) Berndt, H. und I. Hiller. 1962. Hypovitaminose A. nach Magenoperationen. (Dtsch. Z. Verdauungs- u. Stoffwechselkrankh. 22: 233-40.

(778) Bernhard, Karl. 1954. Vitamin-A- und Carotin-resorption. (Ann. paediatrici (Basel) 58, Suppl. 1: 170-78).

(779) Bernhard, K. 1963. Resorption of carotenes and carotenoids. Wiss. Veroeffenti. Deut. Ges. Erna hrung No. 9 169-77.

(780) Bernhard, K. 1953. Absorption of aliphatic hydrocarbons, carotene, and vitamin A by the rat. Fette u. Seifen 55 160-6.

(781) Bernhard, K. and F. Heinzelmann. 1955. Absorption of gelatin - or pectin-stabilized vitamin A preparations in enriched feeds.

(782) Bernhard, K. and G. Ritzel. 1953. More on bile function. Helv. Physiol. et Pharmacol. Acta 11: C12.

(783) Bernhard, K. ; et al. 1952. Influence of bile on absorption of vitamin A. Helv. Physiol. et Pharmacol. Acta 10: C47.

(784) Bernhard, K. ; et al. 1954. The biological importance of bile pigments. Bilirubin and biliverdin as antioxidants for vitamin A and essential fatty acids. Helv. Chim. Acta 37: 306-13.

(785) Bernhard, K. ; et al. 1923. The conversion of α and β carotene to vitamin A in the intestine of the rat. Helvetica Chim. Acta 35(6): 1914-1923.

(786) Bernhardt, K. S. 1936. Vitamin A- Deficiency and learning in rat. Compt. Psychol. 22: 277-279.

(787) Bernheim, J. K., 1934. Hormones and Vitamin A in diet of premature infants. Schweis-med. Wchschr. 64: 8-10.

(788) Bernheim, F. ; et al. 1956. Bone marrow lipids in normal and irradiated rabbits. Radiation Research 4: 132-138.

(789) Bernheim, M. ; et al. 1951. Conjunctival lesions from Vitamin A deficiency in emotional anorexia. Ann. Oculist. 184: 264-265.

(790) Bersin, J. 1963. Vitamin A und andere Spureningredientien in der Kalberfutterung. Nachr. Akad. Wiss. LettSSR. Nr. 10: 67-70.

(791) Bertram, J., and K. Krisch. 1969. Hydrolysis of vitamin A acetate by unspecific carboxylesterases from liver and kidney. Eur J. Biochem. 11(1): 122-126.

(792) Bertram, S. H. 1928. Einige analytische Bemerkungen uber das Vitamin A. Koninkl. Akad. Wetensch. Amsterdam, Proceedings. 32: 664-668.

(793) Bertrand, I. ; et al. 1942. Generalized infiltrative lesions of the brain in course of experimental avitaminosis in rats. Compt. rend. Soc. de biol. 136: 716-717.

(794) Berzins, L. 1958. Changes in the metabolism of vitamin A by experimental tuberculosis in rabbits and cats. Trudy Inst. Ekspti. Med., Akad. Nauk Latv. S. S. R. 18. Voprosy Tuberkuleza, No. 3: 81-89.

(795) Berzins, L. 1959. The influence of vitamin A in experimental tuberculosis. Trudy IX Inst. Eksptl. Med. Akad. Nauk Latv. SSR No. 15, Voprosy Tuberkuleza. No. 2:35-45.

(796) Berzins, L. G. 1958. Carotene assimilation and vitamin A synthesis in patients with bone tuberculosis. Trudy. Inst. Eksptl. Med., Akad. Nauk. Latvian S. S, R. 14, 63-76.

(797) Berzins, J. 1951. The significance of cobalt in feeding of pigs. Latvijas P S R Zinat nu Akad. Vestis. 415-420.

(798) Berzins, J. ; et al. 1952. Salts of manganese, Zinc, copper, and cobalt in feeding hogs to produce bacon. Latvijas P S R Zinatnu Akad. Vestis. No. 11: 19-28.

(799) Berzins, J. and J. Rozenbachs. 1953. Role of cobalt, copper, manganese, and zinc salts in chicken feeding. Latvijas P S R Zinatnu Akad. Vestis No. 9 39-46.

(800) Beschastnov, A. G. ; et al. 1965. Determination of the vitamins A and $D_2$ in bread. Izv. Vysshikh Uchebn. Zavedenii, Pishchevaya Tekhnol. (6):154-6.

(801) Bessey, O. A. 1954. Evaluation of vitamin adequacy. Quartermaster Food and Container Inst. Surveys Progr. Military Subsistence Problems. Ser. 2, Nutrition Aspects of Rations, No. 2, Methods for Evaluation of Nutritional Adequacy and Status: a Symposium Advisory Board on Quartermaster Research and Development, National Research Council, Washington, D. C. pp. 59-68.

(802) Bessey, O. A. 1950. Mikrochemische Methoden. Die Gewinnung kleiner Proben von Serum, Plasma u. Aelbestandtellen des sowie die best. Vitamin Meth: 1:287-326.

(803) Bessey, O. A. ; et al. 1946. The determination of vitamin A and carotene in small quantities of blood serum. J. Biol. Chem. 166: 177-88.

(804) Bessey, O. A. and S. B. Wolbach. 1939. Vascularization of the cornea of the rat in riboflavin deficiency with a note on corneal vascularization in vitamin A. deficiency. J. Exptl. Med. 69: 1-12.

(805) Bessey, O. A. und S. B. Wolbach. 1938. Vitamin A. Physiologie und Pathologie. J. Amer. Med. Ass. 110: 2072-80.

(806) Bessonow, Ss. M. ; et al. 1954. Die Ausnutzung von vitaminisierten Fetten fur die Vitaminisierung der Nahrung bei Gemeinschaftsverpflegung. Als. Vitamin-A. Fragen d. Ernahr. 13, Nr. 5: 22-24.

(807) Besstschasstnow, A. G. ; et al. 1965. Bestimmung der Vitamine A und $D_2$ im Brot. Izvest. vyssich ucebnych Zavedenij (Krasnodar) piscevaja Tech. 6: 154-160.

(808) Bethel, F. H. et al. 1954. Symposium on problems of gerontology. Nutrition symposium Ser. No. 9, National Vitamin Foundation., Inc.: New York.

(809) Bethke, R. M. ; et al. 1927. The fat-soluble vitamin content of hen's egg yolk as affected by the ration and management of the layers. Jour. Biol. Chem. 72(2): 695-706.

(810) Bettini, S. & L. Tentori. 1948. Insects and vitamins; review of literature; vitamins A and E in Anopheles labranchise, atroparvus variety. Rendle. Ist. super. san. 11: 109-122.

(811) Bettinotti, A. E. & J. C. Persico. 1955. Vitamin-A: use in spermatic alterations. Obst. y ginec. latino-am. 13:37-38.

(812) Beutel, R. H. ; et al. 1955. Conversion of vitamin A acetate to retrovitamin A acetate. Jour. Amer. Chem. Soc. 77(19): 5166-5167.

(813) Bever, A. K. van. 1938. Determination of vitamin A in milk and butter. Arch. neerland. physiol. 23; 552-78.

(814) Bezssonoff, N. 1929. Uber die Ernahrung von Meerschweinchen mit bestrahltem Hafer mit und ohne Zusatz der Vitamine A and C. Bull. Soc. Chem. Biol. 11; 1146-1163.

(815) Bezssonoff, N. 1930. Vitamin A. und Carotin. Compt. rend. Acad. Sciences 190. 529-32.

(816) Bezssonov. N. 1923. Preparation of an antiscorbutic product and the function of vitamin A in experimental scurvy. Bull. soc. hyg. aliment. 11, 14-38.

(817) Bhapkar, D. G. und D. P. Bhore. 1963. Nahrwert von Reis. Poona agric. Coll. Mag. 53: 32-34.

(818) Bhatia, J. S. 1952. Effect of cooking on the vitamin A content of ghee (clarified butter). Bull. Central Food Technology Research Inst., Mysore 2: 72-4.

(819) Bhatia, I. S. 1953. Vitamin-A-Gehalt von Kuhbutterfett. Der Vitamin-A-Geh. Bull. centr. Food technol. Res. Inst., Mysore 2: 178-79.

(820) Bhatia, D. S. ; et al. 1960. Qualitatserhaltung bei mit Protein and Vitamin angereichertem Biskuits. Food Sci. (India) 9: 280-81.

(821) Bhattacharya, S. 1969. Vitamin A complexes. II. Influence of bile acids. wax, and other materials. J. Inst. Chem. 41 Pt. 2: 60-4.

(822) Bhattacharya, S. 1969. Vitamin A complexes. 1. Influence of aluminum salts of fatty acids on stability. J. Inst. Chem. (India) 41, Pt. 1: 33-40.

(823) Bhattacharya, S. and U. P. Basu. 1951. Studies on vitamin A in solution. V. Aqueous system. Jour. Indian Chem. Soc. 28(12): 693-697.

(824) Bhattacharya, S. ; et al. 1954. Vitamin A in solution. VI. Stability in relation to concentration and chemical forms of vitamin A and solvents. J. Indian Chem. Soc. 31: 231-40.

(825) Bhattacharya, R. K. and G. C. Esh. 1961. Interrelationship of dietary protein and vitamin A in metabolism. III. Influence of vitamin A on the metabolism of dietary nitrogen in rats. Ann. Biochem. and Exptl. Med. (Calcutta) 21(8):215-222.

(826) Bhattacharya, R. K. and G. C. Esh. 1962. Interrelationship of dietary protein and vitamin A in metabolism. V: Protective influence of vitamin A during amino-acid inbalance. Ann. Biochem. and Exptl. Med. (Calcutta) 22(6): 147-152.

(827) Bhattacharya, R. K. and G. C. Esh. 1962. Interrelationship of dietary protein and vitamin A in metabolism. IV. Influence of vitamin A intake on the maintenance requirement of dietary nitrogen and endogenous protein catabolism in rats. Ann. Biochem. and Exptl. Med. (Calcutta) 22(4): 83-90.

(828) Bhattacharya, R. K., and G. C. Esh. 1963. Interrelationship of dietary protein and vitamin A in metalbolism. VI. Influence of vitamin A during protein depletion and regeneration. Ann. Biochem. Exp. Med. (Calcutta) 23(11): 461-466.

(829) Bhattacharya, R. K. and G. C. Esh. 1964. Protective influence of vitamin A during amino acid imbalance. Bull. Nat. Inst. Sci. India No. 25: 119-29.

(830) Biagi, G. L. 1964. Congenital abnormalities caused by chemical agents. Clin. Ter. 28:455-80.

(831) Bianchi, P. L. 1949. Vitamin A. thyroid and hypogalactia; 8 cases. Riv. ital. di Ginec. 32: 247-258.

(832) Biassoni, P., and M. Bestagno. 1961. Bone $P^{32}$ fixation after treatment with vitamin A in growing rat. Arch. E. Maragil iano Patol. e Clin.17(6): 1029-1035.

(833) Bickel, G. 1942. Deficiency syndromes in pregnancy. Rev. med. Suisse romande.62. 161-206.

(834) Bickford, W. G. ; et al. 1952. Stabilisierung von Verbindungen, die Athylen- und Vinylgruppen enthalten, gegen Exydation, Polymerisation und Verfarbung erfolgt durch Zusatz von 0,001 5%, bes. A. P. 2 729-671.

(835) Bickoff, E. M. 1957. Determination of carotene. In: Methods of Biochem. Analysis. Interscience Pub, Inc., New York. 4:1-42.

(836) Bidault und G. Couturier. 1919. Wirkung der Hitze auf die Vitamine des Fleisches. (C. r. soc. de biologie 83. 1022-23.

(837) Bidyadhar, N. K. 1942. Vitamin-A: Therapy in eye practice. Antiseptic 39:801-808.

(838) Biehn, M. E. 1947. The colorimetric determination of vitamin A. Canadian Jour. Med. Technol. 9(2): 48-51.

(839) Bielig, H. J. 1940. Vitamin A - Formation from β-carotene in organism of rat. Ztschr. f. physiol. Chem. 266: 112-116.

(840) Bielinska, Z. and Maria Grekowicz-Rakowska. 1956. Biological study on the nutritive value of selected limited food ration for man. II. The influence of supplementing of certain nutritive constituents in the selected food ration. on the development of rats. Roczniki Panstwowego Zakladu Hig. 7: 477-92.

(841) Biely J. und W. Chalmers. 1936. Der Vitamin-A-Bedarf des wachsenden Huhnes. 1. Vorlaufige Utersuchungen mit slandardisiertem Lebertran. Canad. J. Res. 14. Sect. C 21-24. 14.

(842) Biely, J. ; et al. 1962. The effect of excessive amounts of dietary vitamin A on egg production in White Leghorn hens. Poultry Sci. 41(4): 1175-1177.

(843) Bieri, J. G. and M. O. Schultze. 1951. Microspectrophotometric determination of vitamin A and carotene in blood. Arch. Biochem. Biophys. 34: 273-9.

(844) Bieri, J. G. and M. O. Schultze. 1951. The utilization of solubilized aqueous carotene by normal and hypothroid rats. Arch. Biochem. Biophys. 34: 280-4.

(845) Bieri, J. G., and R. P. Sandman. 1951. Utilization of injected carotene by vitamin A-deficient rats. Fed. Proc. 10(1): 376.

(846) Bieri, J. G. und R. P. Sandman. 1951. Die vergleichsweise Ausnutzung von Carotin bei oraler und parenteraler Zufuhr. Proc. Soc. exp. Biol. Med. 77: 617-19.

(847) Bieri, J. G., and C. J. Pollard. 1953. Studies of the in vitro conversion of carotene to vitamin A. Texas Repts. Biol. and Med. 11(3): 402-411.

(848) Bieri, J. G., and Clifford J. Pollard. 1954. The site of conversion of beta-carotene injected intravenously into rats. Brit. J. Nutrition 8: 32-44.

(849) Bieri, J. G. 1955. Utilization of circulating carotenoids in the chick and rabbit. Arch. Biochem. and Biophys. 56(1): 90-96.

(850) Bieri, J. G. 1955. Effect of tocopherol on carotene conversion. Proc. Soc. Exptl. Biol. and Med. 88(3): 482-484.

(851) Bieri, J. G. 1955. Enzymatic conversion of carotene to vitamin A. Final report for the period 1 Jan 1952-31 Dec 1954 under Contract Nour-700(00), NR 123-118.

(852) Bieri, J. G. ; et al. 1957. Die Verwertung von Vitamin A und Carotin durch selenvergiftete Ratten. Proc. Soc. exp. Biol. Med. 94: 318-20.

(853) Bieri, J. G. 1960. Current aspects of vitamin A, vitamen E, and selenium in poultry nutrition. Worlds Poultry Sci Jour. 16(3): 245-258.

(854) Bieri, J. G. und Ernest G. McDaniel. 1962. Ubichinon (Coenzym Q) in der keimfreien Ratte. Biochim. Biophysica Acta (Amsterdam) 56; 602-03.

(855) Bieri, J. G., and E. L. Prival. 1966. Effect of deficiences of a-tocopherol, retinol and zinc on the lipid composition of rat testes. J. Nutr. 89(1): 55-63.

(856) Bieri, J. G. 1966. Interrelations between ubiquinones and vitamins and hormones. Vitamins Hormones 24: 587-98.

(857) Bieri, J. G. ; et al. 1968. Testis requirement for vitamin A in the rat and the effect of essential fatty acid. Int. Z. Vitaminforsch. 38(3-4) 312-19.

(858) Bieri, J. G. ; et al. 1969. Survival of germ-free rats without vitamin A. Science, 163(3867): 574-5.

(859) Bierry, H. ; et al. 1919. Uber den Mechanismus der Schadigungen und der physiologischen Storungen, welche die von Avitaminosen betroffenen Tiere Darbieten. C. r. soc. de biologie 83: 845-47.

(860) Biffoli, R. 1959. Chromatic reaction of vitamin A with sulfuric acid. Boll. Lab. Chim. provinciali (Bologna) 10; 380-8.

(861) Bifulco, E. 1953. Vitamin-A Intoxication; case in adult. New England J. Med. 248:690-692.

(862) Biggerstaff, R. H. ; et al. 1971. Effects of vitamin A on in vitro tooth bud formation of rats. J. Dent. Res. 50:173.

(863) Bilek. F. 1937. Fat-soluble vitamins in buffalo milk. Proc. 11th World's Dairy Congr., Berlin 3; 199-202.

(864) Biljuk, M. Ja. 1958. Der Stoffwechsel der Vitamine A, C und PP bei Magen- und Zwolffingerdarmgeschwuren. Klin. Med. 36 (39). Nr. 10: 132-37.

(865) Billi, C. L. ; et al. 1965. Progestogen therapy in fibrocystic mastopathy. Atti accad Fisiocrit Siena Sez Med Fis.14(2): 1018-1032.

(866) Billitteri, A. and Y. Raoul. 1965. Protective effect of vitamin D against the hematolysis induced by vitamin A. Compt. Rend. Soc. Biol. 159 (6): 1313-17.

(867) Billitteri and Y. Raoul. 1965. Antagonism between vitamins A and D in mitochondria and lysosomes. Compt. Rend. Soc. Biol. 159(10), 1919-23.

(868) Billitteri, A. and Y. Raoul. 1965. Action of vitamin A on complement in vitro and in vivo. Compt. Rend. Soc. Biol. 159 (10): 1882-6.

(869) Billitteri, A. 1968. Vitamin A and experimental granulomas. Bull. Soc. Ital Biol. Sper. 44(4): 221-4.

(870) Billitteri, A. and Y. Raoul. 1968. Antagonism of vitamins A and D. to lysosomes in the mouse in vivo. Comp. Rend. Soc. Biol. 162(3):657-661.

(871) Billitteri, A. ; et. al. 1969. Antagonism between vitamins A and D at the livel of membranes. Bibl. Nutr. Dieta. 13:162-170 .

(872) Binazzi, Maurizio. 1957. Behavior of succinic dehydrogenase of skin. Giorn. ital. dermatol. 98: 509-25.

(873) Bing, R. J. 1943. The effect of vitamin A on some renal functions of the dog. Amer. Jour. Physiol. 140(2): 240-246.

(874) Biondo, M. D'Asaro. 1922. Die Wichtigkeit der verschiedenen Vitamine fur die Immunitat des Organismus. Policlinico, sez. prat. 29:3-5

(875) Bird, H. R. and J. J. Oleson. 1938. Vitamin A deficiency in chicks fed purified rations containing cod-liver oil. Proc. Soc. Exptl. Biol. Med. 38: 870-1.

(876) Bird, H. R. 1947. The Vitamin requirements of chicks. Vitamins and Hormones. 5: 163-173.

(877) Bird, O. 1941. A study of antioxidants with respect to vitamin A in fish oils. Univ. Microfilm Publ. 299: 1-124.

(878) Birdsall, J. J. ; et al. 1958. Effects of light on milk homogenized whole milk and some fortified milk products. Food Technol. 12(12):670-673.

(879) Birnbacher, T. 1928. Spring peak of epidemic hemeralopia caused by deficiency of vitamin A. and pathogenetic importance of spring. Wien-klin. Wehnschr. 41: 698-700.

(880) Birnbacher, T. 1928. Zur Physiologie des fettioslichen Vitamins A. Munch. Med. Wochenschr. 75 (26): 114-115.

(881) Birosel, D. M. and N. J. Sison. 1932. Vitamin A in body and liver oils of some Philippine fishes. Univ. Philippines Natural Applied Sci. Bull. 2: 7-13.

(882) Birren, J. E. ; et al. 1950. The relation of structural changes of the eye and vitamin A to elevation of the light threshold in later life. Jour. Exptl. Psychol. 40(2): 260-266.

(883) Bisaz, S. 1952. Determination of vitamin A in blood. Schweiz. med. Wochschr. 82: 692-4.

(884) Bisaz, S. 1952. Avitaminoses in Switzerland considered from the point of view of a laboratory for vitamin determination. Schweiz. med. Wochschr. 82: 1025-7.

(885) Bisaz, S. 1952. Eine Methode zur Bestimmung des Vitamins A im Blut. J. Gen. Physiol. 35: 361-74. 20/1.

(886) Bisbey, Bertha. ; et al. 1934. Vitamin A and D contents of light, medium and dark egg yolks. Mo. Agr. Expt. Sta., Bull 340: 60-1.

(887) Bisbey, Bertha. ; et al. 1934. Vitamin A and D activity of egg yolks of different color concentrations. Mo. Agr. Expt. Sta., Research Bull. 205: 5-32.

(888) Bisceglie, V. 1931. Vitamins and Tumors. I Vitamin imbalance in alimentation, its effects on neoplastic grafts. Tumori 17(2) : 145-166.

(889) Bisceglie, V. 1931. Vitamins and tumors. II Atypical epithelial proliferation on animals fed a diet with faulty equilibrium. Tumori 17(2) 167-180.

(890) Bisceglie, V. 1946. Vitamin A; Content of liver of Mediterranean tuna fish. Boll. Soc. Ital. Biol. Sper. 22:1115-1116.

(891) Bisceglie, V. 1946. The protective action of the tocopherols on vitamin A in vitro. Boll. soc. ital. biol. sper. 22: 1116-1118.

(892) Bisetti, A. ; et al. 1958. Plasma levels of vitamins A and C and of beta-carotene in tuberculosis patients during chemo-antibiotic treatment. Acta Vitaminol. 12: 111-17.

(893) Bishop, K. Scott, and Agnes Fay Morgan. 1928. Occurrence of deciduomata in rats low in vitamins A and E. Proc. Soc. Exp. Biol. & Med. 25 (6): 438.

(894) Biswas, R. B. 1941. Ocular minifestations due to lack of vitamin "A" in the system (with special reference to the treatment in general practice). Indian Med. Gaz. 76(12): 747-750.

* (895) Biswas, N. M. and Chandicharan Deb. 1965. Testicular degeneration in rats during hypervitaminosis A. Endokrinologie 49 (1-2): 64-9.

* (896) Biswas, N. M. and M. Mukherji. 1968. Effect of excess vitamin A on pituitary-gonadal axis in rats. Anat. Anz 123(3): 337-341.

(897) Bitman, J. H. ; et al. 1962. Influx of sodium thiocyanate into cerebrospinal fluid in normal and vitamin A deficient calves. Jour. Dairy Sci. 45(7): 872-878.

(898) Bitman, J. ; et al. 1962. Effect of vitamin A deficiency on efflux of sodium thiocyanate from cerebrospinal fluid. Jour. Dairy Sci. 45(7): 879-881.

(899) Black, D. A. K., 1949. Absorption of nonfatty substances in sprue. Intern. Congr. Biochem. Abstrs. of Communs. 1st. Congr., Cambridge, Engl. 169-70.

(900) Black, D. J. G. ; et al. 1957. Der Wert des Rasens fur brutende Hennen. Poultry Sci. 36: 780-88.

(901) Black, M. M. ; et al. 1946. South African fish products. Recovery of vitamin A in the unsaponifiable matter of fish-liver oils. J. Soc. Chem. Ind. 65: 249-51.

(902) Black, M. M., and H. M. Schwartz, 1950. Sudafrikanische Fischprodukte. J. Sci. Food Agric. 1. 182-85.

(903) Black, M. J. and H. M. Schwartz. 1950. South African fish products. XXXI. The composition of pilchard oil and of maasbanker oil. J. Sci. Food Agr. 1: 248-51.

(904) Blackfan, K. D. & S. B. Wolbach. 1933. Vitamin-A Deficiency in infants; clinical and pathological study. J. Pediat. 3: 679-706.

(905) Blackie, William J. and George R. Cowgill. 1939. Occurrence of carotene in the oil of Attalea gomphococca Mart. and its relation to vitamin A potency. Food Res. 4(2): 129-133.

(906) Blagojevic, Z. D. Lucic, and M. Dugandzic. 1964. Determination of trace elements in mixtures with vitamins. Acta Pharm. Jugoslav. 14: 37-43.

(907) Blain, E. 1940. Avitaminosis in certain pseudo-nyctalopias; cases. Union med. du Canada. 69:265-269.

(908) Blain, J. A. and G. Shearer. 1963. Catalytic destruction of vitamin A and carotene. Proc. Nutrition Soc. 22(2): 162-71.

(909) Blaizot J. and S. Blaizot. 1950. Biological assay of the vitamin activity of a carotene extract from palm oil. Oleagineux 5: 634-8.

(910) Blaizot, J., and A. Serfaty. 1955. Respiratory intensity of isolated rat diaphragm: Influence of avitaminosis-A. Arch. Sci. Physiol. 9(1): 1-9.

(911) Blaizot, . J. and R. Benac. 1955. Energy output of the rat during experimental avitaminosis. Compt. rend. soc. biol. 149: 810-13.

(912) Blaizot, S., et. al. 1969. Vitamin A and protein metabolism. I. Effect of avitaminosis A on the nitrogen-calorie adjustment in the growing white rat. Ann. Nutr. Aliment. 23(1):117-126.

(913) Blaizot, S.; et. al. 1969. Vitamin A and protein metabolism. II. Reactions of a vitamin A deficient immature rat to partial hepatectomy. Ann. Nutr. Aliment 23(2):127-140.

(914) Blaizot, S.; et. al. 1970. Influence of avitaminosis A on lipolysis in vitro of epididymal adipose tissue in the rat. Arch. Sci. Physiol. 24 :267-277.

(915) Blaizot, S. ; et al. 1970. Vitamin A and protein metabolism. 3. Influence of vitamin A on protein repletion in the white rat after prolonged nitrogen starvation. Ann. Nutr. 24:93-105.

(916) Blakemore, F. ; et al. 1957. The effects of a diet deficient in vitamin A on the development of the skull, optic nerves, and brain of cattle. J. Comp. Pathol. Therap. 67; 277-88.

(917) Blanc, B. 1966. Influence of the stock and industrial treatments on the vitamin content of cow's milk. Le Lait 46 (453-454): 141-158.

(918) Blankenhorn, D. H., and H. Braunstein. 1958. Carotenoids in man. III. The microscopic pattern of fluorescence in atheromas and its relation to their growth. Jour. Clin. Invest. 37(2): 160-165.

(919) Blankhart, D. M. 1967. Individual intake of food in young children in relation to malnutrition and night blindness. Trop. Geogr. med. 19:144-153.

(920) Blasco, J. M. 1954. Food containing vitamin A from fish livers. Spanish 217, 008.

(921) Blasco, J. M. 1955. Food containing vitamin A from fish livers. Spanish 219, 250.

(922) Blattna, J. and J. Davidek. 1961. Detec tion of fat-soluble vitamins on alumina thin-layer chromatograms. Experientia 17: 474.

(923) Blattna, J. ; et al. 1962. Centrifugal chromatography. VI. Chromatographic separation of fat-soluble vitamins in the centrifugal force-field. Mikrochim. Acta No. 5: 868-73.

(924) Blattna, J. ; et al. 1969. Nutritional value of milk and milk products. Prumsyl Potravin 20 (10):289-92.

(925) Blattner, R. J. 1962. Increased intracranial pressure in vitamin A-deficient infants. J. Pediat. 60:953-5.

(926) Blatz, P. E. 1965. The role of carbonium ions in color reception. J. Gen. Physiol. 48(5): 753-60.

(927) Blaxter, K. L. ; et al. 1946. The effect of feeding shark-liver oil to cows on the yield and composition and on the vitamin A and carotene contents of the milk. J. Dairy Research 14: 225-30.

(928) Bleyer, B. 1929. Die Haltbarkeit der Vitaminfaktoren A und D. Medizin. Welt 3: 46-47.

(929) Bleyer, B. ; et al. 1931. Neue Bewertungsmerkmale fur den lebertran. Apoth. Ztg. 46: 1128-30.

(930) Bliss, A. R. Jr. ; et al. 1933. The relation of vitamin A and Vitamin D to urinary calculus formation. J. Urol. 30: 639-53.

(931) Blis, A. F. 1947. The mechanism of retinal vitamin A formation. Jour. Biol. Chem. 172(1): 165-178.

(932) Bliss, A. F. 1947. Enzymic formation of retinal vitamin A. Federation Proc. 6(1): 77.

(933) Bliss A. F. 1949. Reversible enzymic reduction of retinene to vitamin A. Biol. Bull. 97(2): 221-222.

(934) Blitek, D. 1967. Effects of polyethylene containers on the quality of redfish oil. Farm. Pol. 23 (11-12): 837-42.

(935) Blix, G. & G. Englund. 1936. Vitamin-A: Occurrence in Baltic herring. Upsala lakaref. forh. 42:203-207.

(936) Bloch, C. E. 1923. Fat soluble vitamin A and rachitis. Monatschr. f. Kinderh. 25: 36-42.

(937) Bloch, C. E. 1924. Blindness and other diseases in children arising from deficient nutrition. (lack of fat-soluble A factor). Am. J. Dis. Child. 27: 139-148.

(938) Bloch, C. E. 1924. Further clinical investigations into diseases arising in consequence of deficienty in fat-soluble A factor. Am. J. Dis. Child. 28: 659-667.

(939) Bloch, C. E. 1924. Clinical research on diseases due to lack of vitamin A metabolism. Ugesk f. Laeger 86:783-786.

(940) Bloch, C. E. 1926. Light and the A-body. Amer. Jour. Dis. Children 31(3): 315-322.

(941) Bloch, C. E. 1928. Dimished immunity as sign of lack of vitamin A and vitamin C. Ugesk f. Laeger 90: 185.

(942) Block, C. E. 1928. Decline in immunity as sympton due to deficiency in A-vitamine and in C-vitamine. Acta paediat. (Supp. No. 2) 7:61-64.

(943) Bloch, C. E. 1930. Vitamin-A: Deficiency and dental anomalies in man. Acta paediat. 11:535-541.

(944) Bloch, C. E. 1931. Effects of deficiency in vitamins in infancy. Caries of the teeth and vitamins. Am. J. Diseases Children 42: 263-78.

(945) Bloch, H. S. 1955. Chronic hypervitaminosis; probable case in man. Minnesota Med. 38:627-632.

(946) Blochin, N. N. 1936. Zur Methodik der biologischen Prufungen auf Vitamin A. Problems Nutrit. (Voprosy Pitanija) 5, Nr. 2: 31-36.

(947) Block, E. 1960. The use of vitamin A in pre-menstrual tension. Acta Obstet. Gynec. Scand. 39: 586-92.

(948) Bloemer, K. 1947. Carotenization of butter and other edible fats. Monatsh. Veterinarmed. 2: 72-3.

(949) Blomstrand, R. and B. Werner. 1967. Studies on the intestional absorption of radioactive beta-carotene and vitamin A in man. Conversion of Beta-Carotene into Vitamin-A. Scand. J Clin. Lab. Invest. 19(4): 339-45.

(950) Blough, H. A. 1963. A molecular approach to teratogenesis; effect of vitamin A on influenca virus in ovo. Nature 199: 33-5.

(951) Blough, H. A. and R. H. Ottewill. 1966. The effect of vitamin A and detergents on egg particles. An ultranmicroelectrophoretic and electron microscopic study. Exptl. Cell. Res. 44(1):46-52

(952) Blough, H. A. 1966. Effect of vitamin A on myxoviruses. J. Bacteriol. 91 (5): 2093-5.

(953) Blough, H. A., and D. B. Weinstein. 1967. The effect of vitamin A on myxoviruses: II. Alterations in the lipids of influenza virus (chick embryo). Virology 33(3): 459-466.

(954) Blough, H. A. 1967. Lipid alterations and myxovirus phenotype. Biol. Prop. Mammalian Surface Membrane, Symp. 55-9.

(955) Blum, H. B. and F. W. Fabian. 1943. The influence of salting upon vitamis A and C in vegetables. Fruit Products J. 22: 273-5, 283.

(956) Blumenthal, J. S. & M. Wetherby. 1943. In treatment of hypertension. Minnesota Med. 26: 370-371.

(957) Bo, W. J. 1955. The effect of ovariectomy on metaplastic ahanges in the uteri of vitamin A deficient rats. Anat. Rec. 121(2): 241-250.

(958) Bo, W. J. 1956. The relationship between vitamin A deficiency and estrogen in producing uterine metoplasia in the rat. Anat. Rec. 124(4): 619-627.

(959) Bo. W. J. 1956. Glycogen deposition in squamous metaplastic epithelium of the rat uterus. Proc. Soc. Exptl. Biol. and Med. 93(2): 359-361.

(960) Bo, W. J. 1957. Relation of vitamin A deficiency and estrogen to induction of keratinizing metaplasia in the uterus of the rat. Am. J. Clin. Nutrition 5: 666-73.

(961) Bo, W. J. 1958. Relation of vitamin A deficiency and estrogen to induction of keratinizing mataplasia in the uterus of the rat. Natl. Vitamin Foundation, Nutrition Sympossium Ser. No. 16: 14-21.

(962) Bo, W. J. 1961. The effect of vitamin A deficiency and estrogen on the uterus. In: Symposium on the metabolism and function of the fat soluble vitamins A, E and K. Amer. Jour. Clin Nutrition 9(4 pt. 2): 13-22.

(963) Bo, W. J. 1966. The effect of retinol and retinoic acid on the morphology of the rat uterus.

(964) Boas, M. A. and Harriette Chick. 1924. Eer Einflus von Futterung und Haltung der Kuh auf die Kalkablagerung bei Ratten, welche tuglich einen Teil Milch in ihrer Kost erhalten. Biochemical Journ. 18: 433-37.

(965) Boas, M. A. 1926. The anti-rachitic value of winter spinach. Biochem. Jour. 20(1): 153-165.

(966) Bobek, S. 1965. Goiter-promoting effect of some plants. Postepy Hig. Med. Doswiadczalnej 19(2): 303-12.

(967) Boccacci, M. 1958. Determination of vitamin D in the presence of vitamin A by means of inverted-phase paper chromatography. Rend. ist. super. sanita. 21: 296-314.

(968) Bodansky, O. ; et al. 1941. The comparative value of the blood plasma vitamin A concentration and the dark adaptation as a criterion of vitamin A deficiency. Science 94 (2442): 370-371.

(969) Bodansky, O. ; et al. 1943. The concentration of vitamin A in the blood plasma during pregnancy. Journ. Clin. Invest. 22(5): 643-647.

(970) Bodansky, O. and Blanch Markardt. 1951. Effect of Reichstein's Compound L acetate on plasma, liver and kidney vitamin A. J. Biol. Chem. 190: 83-93.

(971) Bodansky, O. and William L. Money. 1954. Rates of development and regression of changes during and after prolonged cortisone administration in rats. Endocrinology 55; 173-85.

(972) Bodo, I. 1959. Changes in serum carotene, vitamin A, calcium, and phosphorus after feeding of carrots and calcium carbonate. Allattenyesztes 8; 255-60.

(973) Boenjamin, R. 1951. Vitamin A and carotenoids in the blood serum of lepers and of their healthy housemates. Neerland. et Indones. Morbis Trop. 3: 147-54.

(974) Boenjamin, R. 1952. Vitamin A and carotenoids and vitamin C in the blood serum of leprosy patients and of their healty housemates. Intem. J. Leprosy 20: 53-66.

(975) Boer, J.andB. C. P. Jansen. 1942. Nutritive value of butter, compared with that of other fats to which varying amounts of Vitamin A and D have been added. Arch. neerl. de Physiol. 26: 1-177.

(976) Boer, H. W. de and Bosgra. 1942. Liquid paraffin as a baking oil. Pharm. Weekblad. 79: 65-75.

(977) Boethius, J. ; et al. 1968. Electrophysiological response to light in a moth species (Manduca sexta) reared from a vitamin A deficient diet. Acta Physiol. Scand. 73 (1/2): 27A-28A.

(978) Bogorov, I. I. 1945. Nutrition of pregnant women. Fel'dsher i Akusherka. No. 9: 36-7.

(979) Boguth, W. ; et al. 1960. Eine neue Methode zur Bestimmung kurz wirksamer Vitamin-A-Praparate. Int. Z. Vitaminforsch. 31: 6-10.

(980) Boguth, W. and H. Weiser. 1961. Influence of vitamin A upon the action of steroid hormones. Int. Z. Vitaminforsch. 31: 317-20.

(981) Boguth, W., and H. Weiser. 1961. The effect of Vitamin A on the action of steroid hormones. II. Int. Z. Vitaminforsch. 32(1): 15-19.

(982) Boguth, W., and O. Sari. 1962. Significance of the thyroid gland in the conversion of beta-carotene into vitamin A in the albino rat. Int. Z. Vitaminforsch. 32: 132-4.

(983) Bohdal, M. and F. Hruba. 1961. The role of vitamin A in protein metabolism. Cesk. Gastroenterol. Vyziva. 15: 420-8.

(984) Bohdal, M., and F. Hruba. 1962. Secretion of vitamin A in bile fluid. Acta Biol. et Med. Germanica 8(1): 60-65.

(985) Bohdal, M., and F. Hruba. 1962. The vitamin A-reservoir of the organism in the course of bromobenzole poisoning. Acta Biol. et Med. Germanica 8(1): 66-78.

(986) Bohdal, M. ; et al. 1962. Vitamins in the nutrition of Czechoslovakian people and some problems of vitamin metabolism. Cesk. Gastroenterol. Vyziva. 16: 252-7.

(987) Bohdal, M. 1962. Vitamin A in human nutrition. Die Nahrung. 6, No. 4: 317-331.

(988) Bohdal, M. 1963. Protein and vitamin A. Ernachrungsforschung 8(4): 722-6.

(989) Bohe, J. 1961. Treatment of the premenstrual syndrome with vitamin "A". Bull. Fed. Gynec Obstet. Franc. 13:174-6.

(990) Bohren, B. B., and S. M. Hauge. 1946. Vitamin A retention in dried eggs as affected by compression and packaging in tin cans. Food Res. 11(1): 39-40.

(991) Boisselot, J., and J. Causeret., 1948. Experimental investiga- investigations on irradiated milk. III. Influence of the irradiation on the level of vitamin in milk. Bull. Soc. Sci. Hyg. Airlment. 36(1/2/3): 30-32.

(992) Bokil, M. D. 1953. Hypovitaminosis A; general and ocular manifestations. J. Indian M. A. 22:165-168.

(993) Bokori, J. 1965. Studies on nutritional gout in poultry. .II . The aetiological role of A-avitaminosis in poultry gout. Acta. Vet. Acad. Sci. Hung. 15:421-40.

(994) Boldingh, J. and J. R. Drost. 1950. Determination of vitamin A in margarine. Proc. Koninkl. Nederland. Akad. Wetenschap. 53, No. 9:1426-7.

(995) Boldingh, J. and J.R. Drost. 1951. The determination of vitamin A in margarine. J. Am. Oil Chemists' Soc. 28: 480-3.

(996) Boldingh, J. ; et al. 1951. Pure all-trans vitamin A acetate and assessment of vitamin A potency spectrophotometry. Nature. 168:598.

(997) Bolhuis, L., and K. Kortenoeven. 1969. The biological activities of vitamin A acetate and vitamin A palmitate: Experiments with chickens. Neth.J. Agr. Sci. 17(2): 109-118.

(998) Bolin, D. W. ; et al. 1943. The influence of carotene intake as supplied by dehydrated alfalfa on the storage of vitamin A and pigments in the livers of the young chick. Poultry Sci. 22: 348-53.

(999) Bolin, F. M. and D. W. Bolin. 1949. Effect of thiourea upon conversion of carotene into vitamin A in sheep. Proc. N. Dakota Acad. Sci. 2: 46-8.

(1000) Bolin, F. M. ; et al. 1950. Use of water-miscible vitamin A for lambs. Vet. Med. 45: 451-2.

(1001) Boling, J. A. ; et al. 1969. Mobilization of liver vitamin A in mature. sheep. J. Nutr. 99(4): 502-504.

(1002) Bolinc, J. A. ; et al. 1969. Secretion of metabolites of vitamin A and B carotene in the bile of sheep. J. Anim. Sci. 20(3):504-508.

(1003) Boilag, W. 1970. Vitamin A and Vitamin A acid in the prophylaxis and therapy of epithelial tumours. Int. Z. Vitaminforsch 40: 299-314.

(1004) Bollag, W. 1971. Therapy of chemically induced skin tumors of mice with vitamin A palmitate and vitamin A acid. Experientia 27:90-2.

(1005) Boller, R. and O. Brunner. 1936. Vitamin A excretion in urine. Klin. Wchnschr. 15:1166.

(1006) Boller, R. and O. Brunner. 1937. Vitamin A excretion in urine. Wien. Arch. f. inn. Med. 31:1-22.

(1007) Boller, R. ; et al. 1937. Vitamin A presence in blood, exudates, duodenal secretion and feces. Klin Wchnschr. 16:1027-1028.

(1008) Boller, R. and O. Brunner. 1937. Vitamin A excretion in urine. Klin. Wchnschr. 16: 861-862.

(1009) Bolomey, R. A., and V. M. Sycheff. 1946. The determination of Vitamin A in soupfin shark liver oils. Div. Fish and Game California Fish Bull. 64: 79-85.

(1010) Bolomey, R. A., and P. C. Tompkins. 1946. The stability of vitamin A in whole shark liver and in the extracted oil. Div. Fish and Game California Fish Bull. 64: 87-93.

(1011) Bolomey, R. A. 1947. Oxidative decompostion of vitamin A. I. Stability of vitamin A towards oxidation and irradiation. J. Biol. Chem. 169: 323-29.

(1012) Bolomey, R. A. 1947. Oxidative decomposition of vitamin A: absorption spectrophotometry of oxidized vitamin A. J. Biol. Chem. 169:331-335.

*(1013) Bomskov, Christian and Georg Seemann. 1933. The effect of vitamin A on mineral metabolism. Z. ges. exptl. Med. 89: 771-9.

(1014) Bomskov, C. and G. Sievers. 1933. The effect of vitamin A on the composition of blood. Z. ges. exptl. Med. 89: 780-5.

(1015) Bomskov, C. 1939. Vitamin A : Biological evaluation. ges. exptl. Med. 106:377-395.

(1016) Bonafos, M. ; et al. 1948. Vitamin A and the biology of the vagina. Gynecol. et obstet. 47, 778-81.

(1017) Bonati, B. ; et al. 1956. Variations of the hepatic, cardiac, renal and adrenal contents of beta-carotene, vitamin A, and ascorbic acid in animals and man in relation to age. Acta Vitaminol. 10: 262-9.

(1018) Bonati, B. ; et al. 1956. Plasma levels and urinary elimination of various vitamins in rats and rabbits in relation to age. Acta Vitaminol. 10: 270-3.

(1019) Bonati, B. ; et al. 1957. Influence of prednisolone on the blood and tissue levels of vitamins A, C, and E in rabbits on hypercholesterolemia-inducing diets. Acta Vitaminol. 11: 7-13.

(1020) Bonciu, C. ; et al. 1958. Contribution to the study of the causes of sterility in female guinea pigs. Arch Roumaines Pathol. Exptl. et Microbiol. 17(1): 63-89.

(1021) Bonfante, G. 1953. Ultra-violet chromatographic separation of vit. A from carotene in ether extracts of blood serum. Clinica Vet. (Milan) 76: 1-6.

(1022) Bonfante, G. 1954. Separation and precise determination of carotene and vit. A in blood, with techniques for detection of pre-deficiency states in infectious diseases. Arch Vet. Ital. 5(1): 1-8.

(1023) Bonfante, G. 1954. Routine determinations of vitamin and provitamin A for diagnostic purposes. Arch. vet. ital. 5: 3-14.

(1024) Bonfante, G. 1954. Administration of carotene via the lungs and its rapid transformation to vitamin A. Arch. vet. ital. 5: 29-40.

(1025) Bonfante, G. 1954. Technique and apparatus for the quantitive determination of vitamin E and provitamin A for diagnostic purposes. Arch. vet. ital. 5, No. 1: 10 pp.

(1026) Bonfils, S., and C. Mayer. 1948. Results of hypervitaminemia A tests in normal and pathologic patients. Compt. Rend. Soc. Biol. 142(1/2): 29-31.

(1027) Bonfils, S. ; et al. 1956. Metabolic impairments in hemorrhagic rectocolitis; their pathogenic and prognostic significance. Semaine hop. Paris 32: 942-9.

(1028) Bonsdorff, B. von & R. Granif. Vitamin A: Increase of stimulatory effect of vagus nerve of rat's heart in absence of fat-soluble vitamins in food. Finska lak. sallsk. handl. 70:79-91.

(1029) Boock, E. and J. Trevan. 1922. Der Nahrwert von Mangold und die Wirkungen eines Mangels a Vitamin A auf Meerschweinchen. Biochemical Journ. 16: 780-91.

(1030) Booher, L. E. & D. E. Williams. 1938. Vitamin A: Biophotometer (dark adaptation) as means of measuring vitamin status of human adults. J. Nutrition 16:343-354.

(1031) Booher, L. E. 1938. Vitamin A requirements and practical recommendations for vitamin A intake. J. Am. Med. Assoc. 110: 1920-5.

(1032) Booher, L. E. ; et al. 1939. An experimental determination of the minimum vitamin A requirements of normal adults. J. Nutrition 17: 317-31.

(1033) Booher, L. E. and E. C. Callison. 1939. Minimum vitamin A requirements of normal adults. II. Utilization of carotene as affected by certain dietary factors and variations in light exposure. J. Nutrition 18: 459-71.

(1034) Booher, L. E., and R. Loughlin. 1941. The vitamin A values of 128 foods as determined by the rat-growth method. U. S. Dept. Agric. Tech. Bull. 802: 1-30.

(1035) Booher, L. E. 1942. Newer aspects of the chemical function of the vitamins. Chemistry & Industry. 388-92.

(1036) Booher, L. E. 1943. Vitamin A requirements of man. Proc. Pacific Sci. Congr., Pacific Sci. Assoc. 6: 367-75.

(1037) Bookwalter, G. N. ; et al. 1968. Storage Stability of blended food products. Food Technology 22 (12): 85-88.

(1038) Booth, R. G. and S. K. Kon. 1934. The relative biological efficiences of the vitamin A and carotene of butter. Biochem. J. 28: 2169-74.

(1039) Booth, R. G. 1936. Einige Kriterien fur die Beurteilung der Reinheit und Qualitat von Dorschleberol. Fertiliser, Feed. Stuffs Farm Suppl. J. 21: 494-95.

(1040) Booth, V. H. 1947. Concerning the presence of vitamin A activity in orange peel pigment. Biokhimiia 12(1): 21-25.

(1041) Booth, V. H. 1947. The relation between carotene concentration and vitamin A activity of carrots for rats. Brit. J. Nutrition 1: 113-26.

(1042) Booth, V. H. 1950. The influence of sex on the storage of Vitamin A. Biochem. Jour. 47(4):43-

(1043) Booth, V. H. 1950. 1950. Recent advances in estimation of vitamin A. Research 3: 497-504.

(1044) Booth, V. H. 1952. Liver storage of vitamin A by male and female rats. Jour. Nutrition 48(1): 13-30.

(1045) Booth, V. H. 1956. Disappearance of carotene from the alimentary tract of vitamin A-deficient rats. Brit. J. Nutrition 10; 241-50.

(1046) Booth, V. H. 1956. Ernahrungserfordernisse und Verbesserung der Nahrungsmittel. Diatetische Versorgung mit Vitamin A und D. Chem. and Ind. 8/12: 1439-42.

(1047) Booth, W. D. 1970. The occurrence of some C19 steroids and vitamin A in boar testis. J. Reprod Fertil. 22:533-4.

(1048) Borda, J. M.; et al. 1956. Acquired ichthyosiform states; cutaneous disturbances and role of hypovitaminosis A. Arch. argent. dermat. 6:47-61.

(1049) Borenstein, B. 1969. Vitamin A fortification of flour and corn meal. Northwestern Miller 276 (2):18 & 20.

(1050) Borenstein, B. 1969. Vitamin A fortification of flour & corn meal. Milling 151(5):56 & 59.

(1051) Borgioli, E. 1967. Aspects of carotene and vitamin A utilization by cattle during hypovitaminosis. Aliment. Anim. 11(8/9): 395-406.

(1052) Borisov. I. M. 1970. Vitamin A. requirements of athletes. Vopr. Pitan.29:43-6.

(1053) Borjas, Ernesto A. 1954. Endemic goiter in Honduras. Amer. Jour. Publ. Health 44(11): 1411-1415.

(1054) Borland, A. A. 1938. Improving the quality of milk. Milk Dealer 27, No. 7: 62-72.

(1055) Bornschein, H. and V. Vukovich. 1953. The electroretinogram in deficiency nyctalopia. Albrecht von Graefe's Arch. Opithalmal. 153; 484-7.

(1056) Borrell, S. 1956. A method for the compensation of vitamin A deficiency in the diet. Anales bromatol. (Madrid) 8: 19-37.

(1057) Bors, F. ; et al. 1971. Reversal of the complications of self-induced Vitamin A deficiency. Br. J. Ophthalmol 55: 210-4.

(1058) Borsanyl, S. J. 1963. Asymptomatic parotid swelling and vitamin A deficient diet. Sinai Hosp. J. (Balt) 11: 92-4.

(1059) Borquez, O. C. 1940. Vitamin A-photometric test in hypovitaminosis. Rev. chilena de pediat. 11: 732-759.

(1060) Borsook, H. and W. L. Halverson. 1940. Nutrition and health in Pasadena. Am. J. Pub. Health 30: 895-900.

(1061) Borsook, H. ; et al. 1943. Nutritional status of aircraft workers in Southern California. II. Clinical and laboratory findings. Milbank Mem. Fund Quart. 21: 115-57.

(1062) Boscaro, M. 1951. Adaptometric studies of females in various phases of ovarian function following loading with synthetic vitamin A. Minerva ginec. 3: 106-109.

(1063) Bose, S. M. and B. N. Banerjee. 1945. Destruction of vitamin A in shark-liver oil. V. Effect of some antioxidants on the stabilization of vitamin A. Indian J. Med. Research 33: 203-13.

(1064) Bose, S. M. 1947. Effect of storage and acidity on the protection of vitamin A in shark liver oil by antioxidants. Current Sci. 16(4): 119-120.

(1065) Bose, S. M. and V. Subrahmanyan. 1949. Examination of Indian Shark-liver oils for vitamin A and some analytical characteristics-relationship between the extinction coefficient of Carr-Price reaction at its absorption max. and International Units. Indian J. Med. Research 37: 1-10.

(1066) Bose, S. M. and V. Subrahmanyan. 1949. Effect of some factors on the protection of vitamin A in shark-oil by antioxidants. Indian J. Med. Research 37: 11-18.

(1067) Bose, S. M. and V. Subrahmanyan. 1950. Influence of dietary fats on certain constituents of liver, blood, and body of albino rats with special reference to fat utilization. Ann. Biochem. and Exptl. Med. (India) 10; 35-44.

(1068) Bose, S. M. and V. Subrahmanyan. 1950. Destruction of vitamin A and attendant changes following the absorption of oxygen by shark-liver oil. Ann. Biochem. and Exptl. Med. (India) 10: 45-50.

(1069) Boshamer, K. 1935. Influence of vitamin deficiency on (after-effects of) surgical operations in south China. Munch. med. Wochschr. 82: 2045-7.

(1070) Bosold, J. 1952. Vitamin-A-Mangel cine Rolle bei Fluor vaginalis und bei klimakterischen Blutungen. Hippokrates 23: 251-52.

(1071) Boss, J. H.; et al. 1966. Histopathology of vitamin A-induced autograft and homograft rejection. Transplantation 4 (3): 263-299.

(1072) Bosticco, A. and M. Arnaudo. 1954. Hematological changes in calves treated with high doses of associated A and E vitamins. Ann. fac. med. vet. Torino 4: 6pp.

(1073) Bosticco, A. and Mario Arnaudo. 1954. Hematological changes in calves treated with high doses of associated A and D vitamins. Atti. soc. ital. sci. vet. 8: 282-5.

(1074) Botazzi, F. 1939. Bread made of a mixture of wheat and Indian corn meal. Attualita med. Ann. igiene. 1-9.

(1075) Bottiglioni, E. and M. De Jaco. 1951-2. Intervitaminic relation. III. Changes of the carotene and axerophthol contents of blood after vitamin E administration. La Clinica.13: 463-9.

(1076) Bottiglioni, E. ; et al. 1958. Histological and histochemical aspects of the cardiovascular apparatus and of the muscles of voluntary activity in vitamin A-deficient rats. Effect of the administration of somatotropic hormone and of a diencephalic lipide fraction. Endocrinol. e sci. costituz. 25: 167-75.

(1077) Bottini, Ettore und Antonio Zavanaju. 1957. Bestimmung der Vitamine in Gemuse- und Obstprodukten mittels infrarotspektroskopie. Ann. Sperimentaz. agrar. (N. S.) 11: 1233-83.

(1078) Bottino, C. 1952. Vitamin A-dark adaptation curve in hypertensive patients before and after therapy. Ann. ottal. e clin. ocul. 78:901-908.

(1079) Boucher, H. 1933. Vitamin A-role of deficiency in pathogenesis of billary lithiasis. Monde med., Paris 43: 591-594.

(1080) Bouin, P. and W. Buchheim. 1933. Vitamin A-effect of deficient diet on male sex gland and sex characters. Compt. rend. Acad. d. sc. 196:1448-1449.

(1081) Bouisset, L. und J. Ruffie. 1956. Uber die Entwicklung der Malaria aus Plasmodium berghei (Vinck und Lips) bei der weissen Ratte (Rattus norvegicus) unter Vitamin-A-Mangel. C. R. Seances Soc. Biol. Filiales 152: 168-71.

(1082) Boukine, V. N. 1952. Compounds of soluble vitamins with protein in fats. Congr. Intern. biochim., Resumes communs., 2e Congr., Paris. 327.

(1083) Boulanger, P. and J. Dequidt. 1946. The colorimetric and spectrographic analysis of fish liver oils. Bull. soc. pharm. Lille. No. 2: 16-17.

(1084) Bouman, J. und E. C. Slater, 1956. Gehalt an Tocopherol in Herzmuskelpraparaten. Nature. 177: 1181-82.

(1085) Bourne, G. 1935. Mitochondria, Golgi apparatus and vitamins. Australian Jour. Exp. Biol. and Med. Sci. 13(4): 239-249.

(1086) Bouvier, J. ; et al. 1954. Vitamin A-malignant ulcerous and phagedenic staphylococcic infection of skin with multiple foci, resistant to usual antibiotics; favorable results of neomycin combined with vitamin A and radiotherapy. Bull. Soc. franc. dermat. et syph. 61: 236-237.

(1087) Bouzas, M. A. 1959. On the significance of Bitot's spots. Bull. Soc. Ophtal Franc No. 3:185-91.

(1088) Bovill, E. G. Jr. 1955. Observations on epiphyseal growth potential following temporary hypervitaminosis A. Surg. Forum, Proc. 41st Congr. Am. Coll. Surgeons. 553-5.

(1089) Bovill, E. G. Jr. 1956. The influence of vitamin A-induced epiphyseal cartilage abnormalities on fracture healing in the guinea pig. Surg. Forum, Proc. 42nd Congr. Am. Coll. Surgeons 7, 592-5.

(1090) Bowden, F. P. and C. P. Snow. 1934. Physicochemical studies of complex organic molecules. I. Monochromatic irradiation. Proc. Roy. Soc. (London) B1115: 261-73.

(1091) Bowden, F. P. und S. H. Bastow. 1934. Physikochemische Untersuchungen komplexer organischer Molekule. Proc. Roy. Soc., London. Ser. B, 116: 27-37.

(1092) Bowen, J. L. ; et al. 1946. Photoelectric photometer for the estimation of vitamin A in margarine. Analyst 71: 20-9.

(1093) Bowland, J. P. ; et al. 1949. The vitamin A and vitamin C content of sows; colostrum and milk. Jour. Animal Sci. 8(1): 98-106.

(1094) Bowland, J. P. ; et al. 1949. Effect of lactation and ration on the fat and vitamin A level of sow's milk. Jour. Dairy Sci. 32(1): 22-28.

(1095) Bowland, J. P. ; et al. 1951. Seasonal variation in fat, vitamin A, and vitamin D contents of sow colostrum and milk. J. Animal Sci. 10: 533-7.

(1096) Bowland, J. P., and J. F. Standish. 1966. Growth, reproduction, digestibility, protein and vitamin A retention of rats fed solvent-extracted rapeseed meal or supplemental thiouracil. Can J. Anim. Sci. 46(1): 1-8.

(1097) Bowles, L. L. ; et al. 1946. The development and demonstration or corneal vascularization in rats deficient in vitamin A and riboflavin. J. Nutrition 32: 19-35.

(1098) Bowles, William H. 1965. The influence of insulin and other physiological factors on liver storage of vitamin A. Diss. Abstr. 25 (12Pt. 1): 6924.

(1099) Bowles, W. H. 1967. Influence of insulin on liver vitamin A in rats. Diabetes 16(10): 704-707.

(1100) Boyd, E. M. ; et al. 1962. The toxicity of benzylpenicillin in animals on vitamin A-deficiencient test diet. U. S. P. XIV. Can. J. Biochem. Physiol. 40: 1685-92.

(1101) Boyer, P. D. ; et al. 1942. Vitamin A and carotene requirements for the maintenance of adequate blood plasma vitamin A in the dairy calf. J. Dairy Sci. 25: 433-40.

(1102) Boyer, P. D. ; et al. 1942. Vitamin A-relationships of avitaminosis A to vitamin C in young bovine. J. Nutrition 23: 525-531.

(1103) Boyer, P. D. ; et al. 1944. The separation of carotene from vitamin A for the determination of vitamin A in blood plasma. Jour. Biol. Chem. 152(2): 445-452.

(1104) Boyer, P. D. ; et al. 1944. Determination of vitamin A and carotene in milk. A rapid extraction procedure. Indust. and Engineer. Chem. Analyt. Ed. 16(2): 101-102.

(1105) Boyer, P. D. 1955. Fat-soluble vitamins. Ann. Rev. Biochem. 24: 465-96.

(1106) Boyle, E. 1934. Irradiation of a turbot vitamin A concent rate with homogeneous ultra-violet radiation. Biochem. J. 28, 573-4.

(1107) Boyle, P. E. 1933. Manifestations of vitamin A deficiency in a human tooth germ. J. Dental Research 13, 39-50.

(1108) Boyle, P. E. 1941. Effect of various dietary deficiences on the periodontal tissues of the guinea pig and of man. J. Am. Dertal Assoc. 28: 1788-93.

(1109) Boyle, P. E. 1947. Vitamin A-effects of deficiency on periodontal tissues. .Am. J. Orthodontics. (Oral. Surg. Sect.)33: 744-748.

(1110) Boynton, Lyman C., and W. L. Bradford. 1931. Effect of Vitamins A and D on resistance to infection. Jour Nutr. 4(3): 323-329.

(1111) Bracci, R. ; et al. 1963. Influence of hypovitaminosis A on bone metabolism of Sr 85 in the rat during growth. Atti. Accad. Fisiocr. Siena (Medicofis) 12:1247-51.

(1112) M. Bracco and Hans von Euler, 1948. The primary action of vitamin A and the primary symptoms of Vitamin A deficiency in the animal organism. Arkiv. Kemi, Mineral Geol. 26A, No. 15: 12 pp.

(1113) Bracco, R. 1939. Vitamin A-deficiency in human beings; review of literature. Riv. di pat. sper. 23: 275-294.

(1114) Bracco, R. 1939. Vitamin A-reticulo-endothelial system in hyper-vitaminosis; experimental study. Riv. di pat. sper. 23: 295-312.

(1115) Brachi, R. M., 1953. Examination of some components of cephalopod and sperm-whale liver oil by the chromatographic method. Biochem. J. (London) 54. 459-65.

(1116) Brada, Z. and I. Abelin., 1948. The influence of thiamine on carbohydrate metabolism in alloxan diabetes. Experientia 4; 399-400.

(1117) Bradfield, D, and M. C. Smith. 1938. The ability of the dog to utilize vitamin A from plant and animal sources. Amer. Jour. Physiol. 124(1): 168-173.

(1118) Bradford, W. L. 1928. Mucosus organism from suppurative lesions of rat on diet deficient in vitamin A. Jour. Infeci. Dis. 43(5): 407-414.

(1119) Braekkan, O. R. 1948. Vitamins in whale liver. Norske Vidensk-Akad, Oslo - Hvairadets Skrift, Sct. Results Marine Biol. Res. 32: 1-25.

(1120) Braekkan, O. R. 1949. Determination of vitamin A in whale liver oils. Activated glycerol dichlorohydrin. Analyt. Chem. 21(12): 1530-1531.

(1121) Braekkan, O. R. ob George Lambertsen., 1952. Bestemmelse av vitamin A i traner og vitaminoljer; en sammenliknende undersokelse av forskjellige metoder. Fiskeridirektoratets skrifter. Serie Teknologiske undersokelesr, v. 2, No. 9.

(1122) Braekkan, O. R. und G. Lambertsen, 1952. Bestimmung von Vitamin A in Margarine. Tidsskr. Kjemi Bergves. 12: 28-31.

(1123) Braekkan, O. R. and Ada Probst. 1953. Vitamins in Norwegian fishes. 1. The contents of niacin, riboflavine, pantothenic acid, vitamin $B_{12}$, and vitamin A in the whole fish and different organs of herring. and mackerel. Fiskeridirektorat. Skrifter 2 No. 13: 3-10.

(1124) Braekkan, O. R. ; et al. 1955. Vitamins in Norwegian fish. 11. Vitamins in different organs from tuna fish (Thunnus thynnus) caught off the West Coast of Norway. Fiskeridirektoral, Skrifter, Ser. Teknol. Underspk. 3, No. 3, 18pp.

(1125) Braekkan, O. R. ; et al. 1960. Vitamin A isomers in the liver of rats and chicks. Nature 186: 312.

(1126) Braekkan, O. R. ; et al. 1960. Liver storage of vitamin A in rats and chicks. Int Z Vitaminforsch 30:363-79.

(1127) Braekkan, O. R. ; et al. 1960. Die Wirkung der Acetonbehandlung auf Vitamin $A_2$-Aldehyd-Extrakte von Heringsrogen. Acta Chem. Scand. 14: 779-82.

(1128) Braekkan, O. R. 1962. Influence of dietary fat on liver storage of vitamin A in chicks. Intern. Z. Vitaminforsch. 32: 284-96.

(1129) Braekkan, O. R. 1962. Liver storage in chicks of oral Vitamin A administered in single or divided dosage.

(1130) Braekkan, O. R. 1963. Liver storage in chicks of oral vitamin A administered in single or divided doses. Intern Z. Vitaminforsch. 32: 369-80.

(1131) Braekkan, Olaf R. 1963. Vitamin A status of young chicks during absorption and depletion of different single doses. Internatl. Zeit. Vitaminforsch. 33(2): 154-175.

(1132) Braekkan, Olaf R. 1963. Studies on the absorption of different forms of vitamin A in young chicks. Internatl. Zeit. Vitaminforsch 33(3): 234-254.

(1133) Braekkan, Olaf R. 1963. The isomerization of vitamin A in chicks. Internatl. Zeit. Vitaminforsch 33(3): 279-293.

(1134) Braekkan, O. R. 1963. Mode of absorption of vitamin A in chicks. Intern. Z. Vitaminforsch, 33: 293-303.

(1135) Braekkan, O. R. 1969. Uptake and storage of vitamin A in rainbow trout (Salmo gairdnerii). Int. Z. vitaminforsch. 39(2): 123-30.

(1136) Bragagnolo, G. 1942. Vitamin A-bactericidal potency of hypervitaminic tuna liver oil. Gior. di batteriol. e immunol. 28: 299-319.

(1137) Braganca, Beatriz de M. ; et al. 1942. Vitamin A and D contents of certain fish-liver oils. Ann. Biochem. Exptl. Med. 2: 113-116.

(1138) Brahic, J. ; et al. 1947. Vitamin A-chronic hyperplastic reticuloendothellosis with cutaneous, glandular, splenic and hepatic localization, with hypovitaminosis; pathogenic study. Bull. et Mem. Soc. Med. d. hop. de Paris 63: 544-549.

(1139) Braman, W. W. ; et al. 1935. The utilization of energy-producing nutriment and protein in white and yellow corn and in diets deficient in vitamins A, D, or G. Jour. Agric. Res. 50(1): 1-37.

(1140) Brammer, J. D. and Richard H. White. Vitamin A deficiency: Effect on mosquito eye ultrastructure. Science (Washington) 163(3869): 821-823.

(1141) Brandaleone, H. and E. Papper. 1941. Vitamin A-effect of local and oral administration of cod liver oil on rate of wound healing in vitamin deficient and normal rats. Ann. Surg. 114: 791-798.

(1142) Brandes, D. and E. Anton., 1966. The role of lysosomes in cellular lytic processes. III. Electron histochemical changes in mammary tumors after treatment with cytoxan and vitamin A. Lab. Invest. 15(6) 987-1006.

(1143) Brandes, D. ; et al. 1966. Role of lysosomal labilizers in treatment of mammary gland carcinomas with cyclophosphamide (NSC-26271). Cancer Chemotherapy Rept. No. 50(1-2), 47-53.

(1144) Brandes, D. ; et al. 1967. Studies of L1210 leukemia: II. Ultrastructural and cytochemical changes after treatment with cyclophosphamide and vitamin A. J. Nat. Cancer Inst. 39(3): 385-421.

(1145) Brandes, D. ; et al. 1967. The effect of X-irratiation on the lysosomes of mouse mammary gland carcinomas. Cancer Res. 27(4): 731-746.

(1146) Brandes, D. ; et al. 1969. Lysosomes and cellular regressive changes in rat mammary gland involution. Lab Invest. 20(5): 465-471.

(1147) Brandes, E. P. and F. J. Kirchmeyer. 1952. Stabilitat der Vitamine in flussigen Multivitaminpraparaten. Chem. Products Chem. News (N. S.) 15:243-246.

(1148) Brandes, E. P. and F. J. Kirchmeyer. 1952. Vitamin-A-Stabilisierung. Ein neues Praparat. Chem. Products Chem. News (N. S.) 15:252-255

(1149) Brandrup, W. 1932. Uber den Wert und die Grenzen der chemischen Vitaminreaklionen bei lebertran. I Chemische Prufung des Lebertrans auf Vitamin A. Pharmaz. Ztg. 77: 536.

(1150) Brandrup, W. 1933. Uber den Wert und die Grenzen der chemischen Vitaminreaklion bei lebertran. III Chemische und biologische Prufung des Lebertrans auf Vitamin A. Pharmaz. Zig. 78. 433. 22/4.

(1151) Branion, H. D. 1934. The fat-soluble vitamin content of the liver oil of the burbot. Sci. Agr. 15: 1-11.

(1152) Bransby, E. R. ; et al. 1944. The influence of supplements of vitamins A, $B_1$, $B_2$, C and D on growth, health and physical fitness. Brit. Med. J. 1; 77-8.

(1153) Barnsby, E. R. and J. E. Fothergill. 1954. Vitamin A- The diets of young children. Brit. Jour. Nutrition 8(3):195-204.

(1154) Bratslawskaja, K. I. 1954 Charakter der Veranderung der Menge on Vitamin A im Blut nach Gaben von Vitamin A an Kranke, die Storungen des Hornbildungsvermogens auf weisen. Nachr. Venerol. Dermatol. 4: 21-24.

(1155) Bratslavskala, K. I., 1961. Adaptive capacity of the eye before and after vitamin A therapy in cornification disorders. Vestn. Derm. Vener 35: 45-7.

(1156) Bratslavskaya. K. I., 1963. Effect of carotene administration on the character of variation of vitamin A amount in the blood of patients with impaired keratinization. Vestn. Dermatol. Venerol. 37(8), 11-13.

(1157) Bratton, R. W. ; et al. 1948. Breeding behavior, spermatogensis, and semen production of mature dairy bulls fed rations low in carotene. J. Dairy Sci. 31: 779-91.

(1158) Braude, R. ; et al. 1941. Vitamin A-studies with rats and pigs. Biochem. J. 35: 693-707.

(1159) Braude, R. ; et al. 1946. A note on certain vitamins of sow colostrum. J. Dairy Research 14: 414-18.

(1160) Braude, R. ; et al. 1947. Composition of sow milk. Brit. J. Nutrition 1: 64-77.

(1161) Braude, R. ; et al. 1951. Some observations on vitamin A requirements of pigs. Vet. Rec. 63(43): 671-673.

(1162) Brauer, O. and W. J. Schoen., 1962. Determination of the flavor constituents of paprika fruits, particularly capsaicin. Angew. Botan. 36: 25-32.

(1163) Braun, H., 1938. Die Vitamine. Kurze Zusammenfassung lhrer Physiologie und Pharmakologie. Dtsch. Apotheker-Ztg. 53: 1496-1500.

(1164) Braun, I. G. 1962. Vitamin A. Excess, deficiency, requirements, metabolism and misuse. Pediat Clin. N. Amer. 9:935-44.

(1165) Braun, W. 1945. The carotenoid and vitamin A levels in cattle. I. Seasonal changes of the carotenoid and vitamin A levels and the normal carotenoid-vitamin A ratio of the blood. J. Nutrition 29: 61-71.

(1166) Braun, W. 1945. Studies on the carotenoid and vitamin A levels in cattle. II. Carotenoids and vitamin A in the liver, their ratio and their relationship to blood levels. Jour Nutrition 29 (1): 73-79.

(1167) Braun, Werner, and B. N. Carle. 1943. The effect of diet on the vitamin A content of the bovine fetal liver. Jour. Nutrition 26 (6): 549-554.

(1168) Brawley, R. E. 1935., Vitamin A-pH of normal resting saliva; effects of vitamins in school children. J. Den. Research 15: 87-88.

(1169) Bray, G. W. 1928. Vitamin-B deficiency in infants: its possibility, prevalence and prophylaxis. Trans. Roy. Soc. Trop. Med. & Hyg. 22(1): 9-42.

(1170) Brazer, J. G. and A. C. Curtis. , 1940. Vitamin A deficiency in diabetes mellitus. Arch. Internat. Med. 65: 90-105.

(1171) Bredenbach, H., 1964. To the clinical picture of vitamin A poisoning. Z Aerzti Fortbild (Jena) 58:606-10.

(1172) Breese, B. B., and A. B. McCoord. 1939. Vitamin A absorption in celiac disease. Jour. Pediatrics 15(2): 183-196.

(1173) Breese, B. B., and A. B. McCoord. 1940. Vitamin A absorption in catarrhal jaundice. Jour Pediatrics 16(2): 139-145.

(1174) Breese, B. B.; et al. 1942. The absorption of vitamin A in tuberculosis. J. Am. Med. Assoc. 119: 3-4.

(1175) Brence, J. L., and J. A. Nelson. 1949. The vitamin A potency of Montana butter. Bull. Montana Agric. Expt. Sta. 465: 3-16.

(1176) Brence, J. L. and J. A. Nelson., 1951. A comparison of the vitamin A potency of milk fat from cows fed on dry feed and on green pasture. J. Dairy Sci. 34: 960-5.

(1177) Brenner, R. R. 1953. Chemical composition of the fat deposits of the fish Prochilodus lineatus. III. Liver fat. Anales Assoc. Quim Argentina 41: 265-271

(1178) Brenner, S. ; et al. 1942. The relation of liver stores to the occurrence of early signs of vitamin A deficiency in the white rat. Jour. Nutrition 23(5): 459-471.

(1179) Brenner, S. and Lydia J. Roberts. 1943. Effects of vitamin A depletion in young adults. Arch. Internal Med. 71: 474-82.

(1180) Brenner, S. ; et al. 1948. Effect of high-temperature storage on the retention of nutrients in canned foods. Food Technol. 2: 207-21.

(1181) Breslau, R. C. ; 1957. Hypervitaminosis A. Arch. Pediat. 74: 139-52.

(1182) Breuninger, H. and A. N. Khan. 1960. The local effect of vitamin A on the nasal mucosa. HNO 8(9):280-282.

(1183) Breusch, F. und Rosario Scalabrino. 1934. Die quantitativen Verhaltnisse der Leberlipoide. Z. ges. exp. Med. 94: 569-78.

(1184) Brew, W. and M. B. Scott. 1946. Chemical determination of vitamin A in mixed feeds and feedstuffs. Indust. and Engineer. Chem., Analyt. Ed. 18(1): 46-48.

(1185) Bridges, C. D. B. 1964. Periodizitat der Absorptionseigenschaften bei Pigmenten der Fischretina, die Auf Vitamin $A_2$ basieren. Nature (London) 203: 303-4.

(1186) Bridges, C.D.B. 1965. Sehpigmente bei einem Fisch nach unterschiedlicher Beleuchtung. Nature (London) 206: 1161-62.

(1187) Bridges, C. D. B. 1965. The grouping of fish visual pigments about preferred positions in the spectrum. Vision Research 5(5-6): 223-38.

(1188) Bridges, C. D. B. 1965. Variability and relations of fish visual pigments. Vision Research 5(5-6) : 239-51.

(1189) Bridges, C. D. B., 1965. Absorption properties, interconversions, and environmental adaptation of pigments from fish photoreceptors. Cold Spring Harbor Symp. Quant. Biol. 30: 317-34.

(1190) Briggs, G. M., and M. R. Spivey Fox. 1956. Vitamin A deficiency in chicks produced by adding high levels of bentonite to synthetic diets. Poultry Sci. 35(3): 570-576.

(1191) Briggs, M. H. 1960. Der Vitamin-und Coenzymgehalt in durch Buttergelb hervorgerufenen Hepatomen. Nature (London) 187: 249-50.

(1192) Briggs, M. H. and R. B. Duncan., 1961. Vitamin A Oder receptors. Nature 191, 1310-11.

(1193) Briggs, M. H. 1962. Neue Funktionen fur Vitamine. J. New Zealand Inst. Chem. 26: 84-93.

(1194) Brighton, C. T.; et al. 1970. Comparison of the effects of excess vitamin A and high oxygen tension on in vitro epiphyseal plate growth. I. Morphologic response. Calcif. Tissue Res. 6: 151-61.

(1195) Bring, S. V. ; et al. 1955. Nutritional status of school children 15 and 16 years of age in three Idaho communities; blood biochemical tests. J. Nutrition 57: 29-45.

(1196) Bring, S. V. ; et al., 1965. Relationship between cholesterol and vitamin A metabolism in rats fed at different levels of vitamin A. J. Nutr. 85(4): 400-406.

(1197) Bring, Shirley V., 1965. The effect of estradiol benzoate on cholesterol and vitamin A metabolism. Proc. Soc. Exp. Biol. Med. 120(1): 45-48.

(1198) Brink, M. F.; et al., 1969. Nutritional value of milk compared with filled and imitation milks. Amer. J. Clin. Nutr. 22(2), 168-80.

(1199) Briod, A. E. und Bion R. East., 1939. V. St. A., Vitaminkonzentrat. E. P. 506 730.

(1200) British Patent., 1948. 657 759. Herstellung eines Vitamin-Erzeugnisses in trockener Form.

(1201) British Patent, 1956. 791 180. vom 16/3. Haltbare Vitamin A undjoder-D-Praparate.

(1202) British Patent, 1965. 980 276 vom 10/4. Arzneimittel zur Senkung des Blutcholesterinspiegels.

(1203) British Patent, 1962. 993 139 vom 18/10. Herstellung stabiler Praparate von fettloslichen Vitaminen. (Vitamin A, D, E, K).

(1204) British Patent, 1933. 401 095. Fish-liver oils.

(1205) British Patent, 1951. 658 411. Vitamin A concentrate from fish-liver oils.

(1206) British Patent, 1962. 990721. vom 5/9. Vitamin-Preparation.

(1207) British Patent, 1947. 590 090. Stabilization of fatty materials (vitamin A) against oxidation.

(1208) Brocklesby, H. N. 1927. Bestimmung des Gehaltes an Vitamin A im Leberole des Hundsfisches Squalus Sucklii. Vorlaufige Bemerkung Canadian Chem. Metallurg. 11. 238-39.

(1209) Brockmann, H. and M. L. Tecklenburg. 1933. The vitamin A content of rat liver after feeding with α-, β-and γ carotent, and the antimony trichloride reaction of vitamin A preparations. Z. physiol. Chem. 221: 117-28.

(1210) Brode, W. R. and M. A. Magill. 1931. A critical study of the antimony trichloride color test for vitamin A. J. Biol. Chem. 92: 87-98.

(1211) Broder, M. H. 1938. Bemerkungen zu den neurohistologischen Grundlagen der Avitaminosen. Klin. Wschr. 17: 461-465.

(1212) Brody, H. and S. Goldman., 1941. Vitamin A-relationship of vitamin A and estrogens. Endocrinology 29: 164.

(1213) Brody, S. ; et al., 1947. Growth and development with special reference to domestic animals. LXI. Growth and metabolism of beef cattle. Missouri Agr. Expt. Sta., Research Bull. 404: 2-16.

(1214) Brogi, G. 1936. Vitamin A-in tunny oil. Clin. Pediat. 18: 531-570.

(1215) Brollo, F. Dal, ; et al. 1958. Stability of pharmaceutical preparations of water-soluble vitamin A. Boll. Chim. Farm. 97: 727-37.

(1216) Bronsch, K., 1954. The effect of vitamin A on the endocrine system. Zentr. Veterinarmed. 1: 439-44.

(1217) Bro-Rasmussen, F.; et al. 1955. Chromatographic separation of vitamin A-active compounds in cod-liver oil. Analyst. 80: 418-28.

(1218) Bro-Rasmussen, F. 1956. Investigations at the State Vitamin Laboratory of the vitamin A and carotene content of Danish dairy products. Statens Husholdningsrads Fablige Medd. 10: 37-40;

(1219) Bro-Rasmussen, F., and Willy Hjarde., 1961. Fat-soluble vitamins. Ann. Rev. Biochem. 30: 447-72.

(1220) Brouwer, E. and L. W. J. Helleman. 1933. Vitamins A and C in milk and milk products. Maandschr. v. kindergeneesk. 2: 212.

(1221) Brouwer, E. ; et al. 1939. Vitamin A and carotene in the storage of milk and cream under oxygen pressure (the so-called Hofius process). Verslag. Landb. Onderzock. 45, C, (3): 55-70.

(1222) Browman, L. G. 1939. The reproductive performance of albino rats with previous vitamin A depletion histories. Amer. Jour. Physiol. 125(2): 335-338.

(1223) Brown, C. W.; et al. 1946. Pea vine residue- a very valuable stock feed. Agr. Gaz. N. S. Wales, 57, (10):517-20.

(1224) Brown, E. F., and A. F. Morgan. 1948. The effect of vitamin A deficiency upon the nitrogen metabolism of the rat. Jour. Nutrition 35(4): 425-438.

(1225) Brown, E. F., and A. F. Morgan, 1948. Nitrogen metabolism of the normal and vitamin A-deficient rat as affected by thyroid administration. Jour. Nutrition 35(4): 439-452.

(1226) Brown, E. F., and W. R. Bloor. 1945. The nutritive value of the fatty acids of butter including their effect on the utilization of carotene. Jour. Nutrition 29(5): 349-360.

(1227) Brown, H. Z.; et al. 1952. The role of the reticuloendothelial system in vitamin A and cholesterol metabolism. Metabolism 1(4):349-354.

(1228) Brown, H. B.; et al. 1929. Rachitis bei Ratten.. XIII. Die Wirkung verschiedener Dosen und des Verhaltnisses von Calcium und Phosphor auf die Erzengung von Rachitis. J. Biol. Chemistry 98: 207-14.

(1229) Brown, J.A. 1950. New Concentration of antimony trichloride reagent in U. S. P. XIV identification test for Vitamin A. J. Am. Pharm. A. 39:699

(1230) Brown, J. A. 1951. Abgeandertes Glasgerat und Verfahren zur Erhohung der Genauigkeit der Vitamin A-Bestimmung nach U. S. P. . XIV. J. Am. Pharm. Asso. 40:309-312.

(1231) Brown, J. A. 1953. Determination of vitamins A and E by paper chromatography. Anal. Chem. 25: 774-7.

(1232) Brown, P. S.; et al. 1959. Isomers of vitamin A in fish-liver oils. Nature 184, 1377-9.

(1233) Brown, R. G. ; et al. 1963. A hypothesis for a common mode of action of the fat-soluble vitamins A, D, and E. J. Theoret. Biol. 5(3): 489-92.

(1234) Brown, R. K and E. C. Brown. 1941. Vitamin A-urinary stones: etiology in small children in Syria. Surgery 9: 415-424.

(1235) Brown, S. O. 1962. Burn healing in albino rats and mice fed diets deficient in certain vitamins. Proc. Intern. Congr. Res. Burns, 1st. Bethesda 137-142.

(1236) Brubacher, G.; et al., 1960. Zum Stoffwechsel von β-Apo-8'-carotinal ($C_{30}$). (Chimia (Aarau) 14: 19-20.

(1237) Brubacher, G. ; et al. 1962. Absorption efficiency of gelatin-stabilized vitamin A in the chicken. World's Poultry Congr. Proc., 12th, Sydney, 164-7.

(1238) Brubacher, G. 1968. Determination of vitamins and carotenoids in fats. Anal. Characterization Oils, Fats, Fat Prod. 2: 607-54.

(1239) Brubacher, G.; et al. 1970. On the vitamin content of automatically cooked food. Internationale Zietschrift fur Vitaminforschung 40(1) 90-94.

(1240) Brubacher, G.; et al. 1970. Provision of a selected group of students with some nutrients in their daily nutrition. II. Chemical analysis of vitamins in the blood. Int. Z. Vitaminforsch 40:199-208.

(1241) Bruce, H. M., and G. E. Phillips. 1938. The effect of excess of vitamins A, $B_1$ and C on the assay of vitamin D and of excess vitamin D on the assay of vitamin A. Bio-Chem. Jour. 32(1): 1-4.

(1242) Bruchmann, E. E. 1954. The chemical determination of vitamin D with special application to irradiated yeast. II. Chromatographic purification of vitamins $D_2$ and $D_3$ solutions by Floridin Branntweinwirtschaft 76: 184-5.

(1243) Bruggemann, J.; et al. 1951. Chromatographic separation of vitamins A and D. Naturwissenschaften 38: 562.

(1244) Bruggemann, J. ; et al. 1953. Determination of vitamins A and D as well as of carotene with inorganic chlorides. II General measuring technique and basis of Vitamin A inorganic halide methods. Z. Anal. Chem. 137: 421-33.

(1245) Bruggemann. J. ; et. al. 1954. Chemical determination of vitamins A and D with electrophilic halides. IV. Suggestions for the determination of vitamin A in biological materials. Ibid. 173-82.

(1246) Bruggemann, J. ; et al. 1954. Correlations between tuberculosis organisms and their activators. Monatsh. Tierheilk. 6: 1-12,

(1247) Bruggemann, J. ; et al. 1954. Chemical determination of vitamins A and D with electrophilic halides. III. Determination of vitamin A with ferric chloride. Z. Anal. Chem. 141, 161-73.

(1248) Bruggemann J. and Karl Heinz Niesar., 1955. The demonstration of a factor in the udder tissue of cattle which influences the vitamin A content of milk. Milchwissenschaft 10: 223-5.

(1249) Bruggemann, J. and Jurgen Tiews., 1956. Assay methods for vitamin A in commercial feeds. Vitamine u. Hormone 7: 1-9.

(1250) Bruggemann, J. and K. Heinz Niesar., 1956. Relations of vitamins A and E and of beta-carotene to the female sexual cycle of cattle and pigs, with special reference to cycle sterility. Vitamine u. Hormone 7: 10-25.

(1251) Bruggemann, J. ; et al. 1956. Influence of different amounts of vitamin A in the food on the development of day-old chicks up to 8 weeks. Arch. Geflugelk. 20; 162-93.

(1252) Bruggemann, J. and K. H. Niesar, 1957. Influence of vitamin A on the nucleic acid metabolism of the rat. Vitamine u. Hormone 7: 419-29.

(1253) Bruggemann, J. ; et al. 1959. Bemerkungen uber die Stellungnahme von W. Fromel,, Uber eine Methode Zur Nachprufung der Gehalte an Vitaminen A and D in Vormishchungen". Landwirtsch. Forsch. 12 : 56.

(1254) Bruggemann, J. und J. Schole. , 1959. Beltrage zur Wirkungsweise der Antibiotica. 3. Mitt. Untersuchungen uber die Reakton der Tetracycline, des Penicillins und anderer anabol beziehungsweise synthesefordernd wirkender Verbindungen mit Nicht-Protein- und Protein-SH-Gruppen. Vitamine u. Hormone 8: 362-78.

(1255) Bruggemann, J. and J. Tiews., 1959. Vitamin A accumulation in rat liver after oral ingestion of cis and trans isomers of vitamin A. Naturwissenschaften 46 429.

(1256) Bruggemann, J. und J. Tiews., 1960. Vergiechende Untersuchungen an Albinoratten and Hunnerkuken uber die Verwertung von Neo-(2 monocis-) Vitamin A. Int. Z. Vitaminforsch. 30. 279-305.

(1257) Bruggemann J. and J. Tiews. 1964. The effect of nitrite ions and of varying external temperatures on the conversion of carotene in chicks. Intern: Z. Vitaminforsch 2:(34): 233-40.

(1258) Bruggemann, J. ; et al. 1970. Vitamin A content of the liver of wild animals. Int. Z. Vitaminforsch 40:249-59.

(1259) Brugsch, H., 1950. Kolpokeratosetest bei LatentemVitamin A-Mangel. Mschr. Kinderheilkunde 98: 116.

(1260) Brugsch, H., 1950. Vitamin A-epithelial test for detec tion of latent vitamin A deficiency and threatening keratomalacia in nursing. Ztschr. Kinderh. 68:267-275.

(1261) Bruhne, F., 1943. Hippophae rhamnoides berries as a source of vitamins. Deut. Apoth.-Zig. 58: No. 61/62; Deut. Heilpflanze, 45-6.

(1262) Brummer, P. and J. Harri., 1960. Plasma vitamin A level and the vitamin A absorption test in Achlorhydria. Acta Med. Scand 167:287-8.

(1263) Brunius, E., 1959. Assay of vitamin A in oils. Report on three collaborative experiments. J. Assoc. Offic. Agr. Chemists 42: 657-78.

(1264) Brunner, G. ; et al. 1958. Die Schwankungen des Vitamin-A- und Carotinoidgehalts beim Karpfen (Cyprinus carpio L.) in Abhangigkeit von Entwickling, Wachstum, Ernahrung und anderen Faktoren. Naturwissenschaften 45: 249-50.

(1265) Brusa, P., 1948. Vitamin A-effect on bone growth in infant: 3 cases. Lattante 19:653-661.

*(1266) Brusa, A., and F. Testa., 1953. Lesions of the central nervous system of guinea pigs with hypervitaminosis A. Internatl. Zeitschr. Vitaminforsch. 25(1): 55-62.

(1267) Bruzac, J. F. A., 1944. Vitamin A- Fish-liver oils. Fr. 893,231.

(1268) Bryan, A. H. und G. G. Smith., 1956. Einflu-beta von Milch und Vitamin-D-Praparaten auf das Wachstum in den Vorschuljahren. J. Lab. Clin. Med. 48: 792-93.

(1269) Bryer, L. W. 1957., Experimental evaluation of the physiology of tooth eruption. Intern. Dental J. 7: 432-78.

(1270) Brzozowski, A., 1963. Untersuchung uber Moglichkeiten des Ersatzes von Kraftfutter durch mechanisch getrocknetes Niederungsgras als Futter fur Milchkuhe. Roczniki Nauk roiniczych, Ser. B 83; 431-42.

(1271) Brzozowski, Z. 1953. Determination of vitamin A. Farm. Polska 9 46-8.

(1272) Bubani, V. 1959. Aspects of vitamin metabolism in pregnancy. Vitamin A and beta-carotene. Ann. Ostet. Ginec 81:1139-60.

(1273) Bucher, G. C., and K. L. Osterhaug. 1944. The rag-fish. Fishery Market News 6(10): 9.

(1274) Bucher, G. C.; et al. 1945. Distribution of vitamin A in fish livers. Fishery Market News 7, No. 1: 6.

(1275) Bucher, G. C.; et al. 1947. Estimations of extinction ratios and vitamin A potency of reduction-plant oils. Com. Fisheries Rev. 9, No. 7: 15-17.

(1276) Bucher, K. 1951., The stabilization of fats, fatty oils, and oil-soluble vitamins. Bull. Galenica 14: 155-69.

(1277) Buckley, T. A., 1936. The dietetic value of palm oil. Malayan Agr. J. 24: 485-8.

(1278) Buckstein, J. , 1944. The role of the fat soluble vitamins A and D in nutrition. Amer. Jour. Digest. Dis. 11(4): 109-116; (5): 147-150; (6): 190-195; (7): 224-226; (8): 261-264; (9): 292-294; (10): 326-329.

(1279) Buckwalter, F. H., 1953. Injizierbares Vitamindepotpraparat durch Eintragen von Metallsalzen hoherer Fettsauren, wie Al-, Zr- oder Ge-Stearat in Pflanzenole, wie Erdnusol, langsames Erhitzen auf ca. **American Patent** : 2,768 112

(1280) Budowski, P. 1952. Palm oil (Elaeis guineensia) as a source of Vitamin A in nutrition. Arch. venezolanos nutric. 3, 309-28.

(1281) Budowski, P. and A. Bondi., 1957. Determination of vitamin A by conversion to anhydrovitamin A. Analyst 82: 751-60.

(1282) Budowski, P. and A. Bondi., 1960. Antoxidation of carotene and Vitamin A. Influence of fat and antioxidants. Arch. Biochem. Biophys, 89: 66-73.

(1283) Budowski, P., and J. Gross. 1964. Conversion of carotenoids into Vitamin $A_2$ by the mouse. Israel J. Chem. 2(5a): 328,

(1284) Budowski, P.; etal. 1964. Vitamin-A-Aktivitat des angesauerten Sojabohnensoapstocks in Kuken. J. Amer. Oil Chemists' Soc. 41: 441-45.

(1285) Budowski, P. and Jeana Gross. 1965. Conversion of carotenoids to 3-dehydroretinol (vitamin $A_2$) in the mouse. Nature 206(4990): 1254-5.

(1286) Buffa, A., 1952. Oxidation of vitamin A in the oil extracted from the liver of the tunny and its stabilization with nordihydroguaiaretic acid. Conserve e deriv. agrumari (Palermo) 1: 9-13.

(1287) Buffa, A., 1952. Vitamin A content of tunny liver from the seas of Sicily. Conserve e deriv. agrumari (Palermo) 1: 16-17.

(1288) Buisman, J. A. K. , 1950. Die Bestimmung des Gehaltes an Vitamin A. Chem. pharmac. Technick 6: 11-14.

(1289) Bukaveckiene, R., 1966. Cystine content in epidermis as an indicator of some dietary deficiencies of vitamin A and amino acids. Prikl. Biokhim. i Mikrobiol. 2(5): 532-7.

(1290) Bukin, V. N. und I. K. Murri., 1935. Chemische Methoden der Bestimmung der Vitamine C und A (Carotin). Trudy po prikladnoi Botanike, Genetike i Sselekzii (3) Nr. 8. 39 Seiten.

(1291) Bukin, V. N. and L. Ya. Areshkina. 1940. Protein compounds of provitamin and vitamins A and D. Biokhimiya 15: 448-56.

(1292) Bukin, V. N. 1949. Die Vitaminquellen der Fischindustrie und ihre Ausnutzung. Mitt. Akad. Wiss. UdUSSR 19. Nr. 11: 42-50.

(1293) Bukin, V. N. and L. Ya. Areshkina. 1951. Protein compounds of provitamins and vitamins A and D. Akad. Nauk S. S. S. R., Inst. Biokim. im. A, N. Bakh, Vitaminnye Resursy i Ispol' zovanic, Sbornik 1, 7-21.

(1294) Bullis, D. D.; et al. 1958. Die Wirkung der Verfutterung verschiedener Carotin- und/oder Vitamin A- Quellen auf Blut, Leber und Milchfett von Rindern. Amer. Dairy Sci. Assoc. 7(13/16): 129-38.

(1295) Bult, A. R. and C. J. Sorgdrager. 1938. The influence of sex, and of the castration of the males on the vitamin A metabolism of the rat. Acta. Brevia Neerland. Physiol., Pharmacol., Microbiol. 8: 114-15.

(1296) Bult, A. R., and C. J. Sorgdrager., 1940. De invloed van het geslacht en van castratie van mannelijke ratten op de Vitamine A-stofwisseling der rat. Nederland. Tijdschr. Geneesk. Unde. 84(2): 1963-1970.

(1297) Bunnell, R. H., 1968. Enrichment of fruit products and fruit juices. J. Agr. Food Chem. 16(2): 177-183.

(1298) Burchard, H., 1937. Action of vitamin A in the treatment of rickets. Z. Kinderheilk. 59: 249-56.

(1299) Buren, M. J. 1965. A preliminary study of vitamin A in the abnormal keratotic lesion. J. Amer Podiat. Ass. 55:347-9.

(1300) Burger, K., 1962. Uber die analytische Prufung von Polyvitaminpraparaten. Magyar Kemial Folyoirat (Ung. Z. Chem.) 68: 474-79.

(1301) Burger, K. 1963. Analytische Kontrollmethoden bei Polyvitamin-Praparaten. Talanta (London) 10, 573-82.

(1302) Burgess, P. S. and R. S. Hawkins., 1946. Fifty-sixth annual report for the year ending June 30, 1945. Arizona Agr. Expt. Sta., Annual Report. 56.

(1303) Burgess, R. C.; et al. 1951. Effect of dietary penicillin on liver vitamin A and serum carotenoids in the chick. Arch Biochem. Biophys. 33: 339-40.

(1304) Burgoon, C. F. Jr.; et al., 1963. Effect of vitamin A on epithelial cells of skin. The use of vitamin A in the treatment of diseases characterized by abnormal keratinization. Arch. Dermatol. 87(1): 63-80.

(1305) Burhol, P. G.; et al., 1967. Jejunal biopsy findings and absorption of D-Xylose and vitamin-A in patients with gastrointestinal diseases. T. Norsk Laegeforen. 87: 1262-8.

(1306) Burkel, W., and J. J. Taylor. 1963. Ovarian changes in vitamin A deficient rats. In: 76th Meeting of the American Association of Anatomists, 1962. Anat. Rec. 145(2): 311.

*(1307) Burn, C. G.; et al. 1941. Changes in the structure of the developing tooth in rats maintained on a diet deficient in vitamin A. Yale Jour. Biol. and Med. 13(6): 817-830.

*(1308) Burn, C. G.; et al., 1941. The influence of chronic vitamin A deficiency on the bacterial flora of rats. Yale J. Biol. Med. 14: 89-99.

(1309) Burns, M. J.; et al., 1951. Utilization of vitamin A and carotene by the rat. Arch. Biochem. 30: 341-6.

(1310) Burns, M. J.; et al., 1951. Utilization of vitamin A and carotene by rat; effects of mineral oil and fat content of diet. Arch. Biochem. 30:347-50.

(1311) Burns, M. J., and F. W. Quackenbush. 1951. Stability of dry vitamin A concentrates. Indust and Engineer Chem. 43(7): 1592-1593.

(1312) Burri, R. 1923. Der gegenwartige Stand der Vitaminfrage. (Mitt. Lebensmittelunters. u. Hyg. 17: 140-51.

(1313) Burrier, C., 1960. Action of vitamins A and E in 13 patients with atherosclerosis. Prensa Med. Argent. 47:88-95.

(1314) Burrill, M. W., and R. R. Greene., 1941. Vitamin A and the vaginal response to sex hormones in the rat. Endocrinology 28(5): 765-768.

(1315) Burrows, M. T. & L. H. Jorstad., 1926. Source of Vitamin A in nature. Am. J. Physiol. 77:38-50.

(1316) Burrows, M. T., 1926. The effect of vitamin feeding on the growth of cancer. Proc. Soc. Exp. Biol. & Med. 24 (1); 88-90.

(1317) Burrows, M. T., 1927. Malignant sarcoma in embryonic tissue. Arch. Path. & Lab. Med. 4(2): 168-192.

(1318) Burrows, M. T. & L. H. Jorstad., 1927. Vitamin A - cause of growth of sarcoids or oil tumors. J. A. M. A. 88: 1460-1462.

(1319) Burrows, M. T. und W. K. Farr., 1927. Die Wirkung von Mineralol per os auf den Organismus. Proceed. of the Soc. for Exp. Biology and Medicine 24: 719-23.

(1320) Burrows, W. H., and H. W. Titus., 1938. Vitamin A deficiency and semen production in chickens. Poultry Scri. 17(3): 224-226.

(1321) Burtnicks, E. and Z. Dabolins ., 1957. Changes in concentration of carotene, vitamin A, vitamin B12, and protein fractions in blood serum in patients with gastric and duodenal ulcer. Sovrem. Dannye po Lechebnomu Primeneniyu Vitaminov, 4-oe(Chetvertoe) Vses. Soveshch. pa Vitaminam, Moscow, 26-29.

(1322) Burton, G. W., 1928. Determination of vitamins A, B and C in collards and turnip greens. J. Home Econ. 20, 35-42.

(1323) Burton, A. H. G. and A. R. Balmain., 1930. Vitamin A and streptococcal antitoxic immunity. Lancet 1:1063-1066.

(1324) Burton, H. B. and C. L. Wilkins. 1933. The nutritive value of the pinto bean in the diet of the Mexican children. Proc. Oklahoma Acad. Sci. 13: 16-18.

(1325) Burton, H.; et al., 1970. Comparison of milks processed by the direct and indirect methods of ultra-high temperature sterilization: IV. The vitamin composition of milks sterilized by different processes. Jour. of Dairy Research 37(3):529-33.

(1326) Buschke, W., 1936. Die Vitamine in der Ophthalmologie. A. Vitaminforschg. 5: 37-68.

(1327) Buschke, W., 1936. Merkwurdiger Krankheitsverlauf bei einem mit Carotin be handelten Fall von Ikterus mit Nachtblindheit. Schweiz. med. Wschr. 67: 777-79.

(1328) Busson, A. and H. Simonnet., 1931. Variation in the content of vitamin A in the liver of dogs according to age. Compt. rend. soc. biol. 109: 1253-4.

(1329) Butler, C., 1946. Vitamins A and D in fish livers and viscera. Com. Fisheries Rev. 8: No. 4, 13-19.

* (1330) Butler, W. R.; et al., 1968. Effect of short-term vitamin A deficiency on testicular lipids in the rat. J. Reprod. Fert. 15(1): 157-159.

(1331) Butt, H. R. 1950. Vitamin A- fat soluble vitamins A. E and K; Council on Foods and Nutrition, J. A. M. A. 143:236-241.

(1332) Butt, S. A., 1956. Vitamin A values of certain fruits grown in West Pakistan. Pakistan J. Health 5: 178-81.

(1333) Butturini, U., 1945. Sull' azione ipotensiva della vitamina "A" Gior. Clin. Med. 26(1/6): 30-36.

(1334) Buxton, L. O., 1942. Vitamin A- effect of carbon treatment on fish liver oils; vitamin destruction and peroxide formation. Indust. & Engin. Chem. 34:1486-1489.

(1335) Buxton, L. O. and S. T. Lipsius., 1943. Incorporating vitamins A and D into aqueous mediums such as milk, tea, coffee or pharmaceutical preparations. U. S. 2, 311, 517.

(1336) Buxton, L. O., 1944. Extracting vitamin-rich oil. U. S. 2, 347, 460.

(1337) Buxton, L. O. 1944. Vitamin-rich concentrates. U. S. 2, 347, 461.

(1338) Buxton, L. O., 1947. Tocopherols as antioxidants for vitamin A in fish-liver oils. Ind. Eng. Chem. 39: 225-32.

(1339) Buxton, L. O., 1947. Vegetable oil concentrates as antioxidants for vitamin A in fish-liver oils. Ind. Eng. Chem. 39: 1171-4.

(1340) Buxton, L. O., 1946 Gewinnung von fettloslichen Vitaminkoncentraten aus einem fettlosl. U. S. Patent A. P. 2, 389955.

(1341) Buxton, L. O. and C. E. Dryden., 1947. Stabilization of fatty materials (vitamin A). U. S. Patent 2, 426, 486.

(1342) Buxton, L. O., 1950. Recovery of unsaponifiable fractions from oils. U. S. Patent 2, 508, 220.

(1343) Buxton, L. O. and C. E. Dryden., 1950. Antioxdants and antioxidant-stabilized oleoginous materials. U. S. Patent 2, 511, 427-8.

(1344) Buxton, L. O., 1950. Antioxidant for fats and oils. U. S. Patent 2, 515, 858.

(1345) Buylla, A.; et al., 1944. Vitamin A elimination in feces as basis for functional examination of intestine. Rev. clin. espan. 15: 22-26.

(1346) Buytendijk, H. J., 1963. Case of overdose of vitamin A. Nederl T. Geneesk Unde. 107: 290-291.

(1347) Byczkowski, S., 1951. Vitamin A in codfish oils of Polish origin. Farm. Polska. 7: 203-207.

(1348) Byczkowski, S. and W. Kiewlicz. 1962. Effect of sunlight and air on cod-liver oil. Poznan. Towarz. Przyjaciol Nauk. Wydzial Lekar., Prace Komisji Farm. 1, No. 3: 67-85.

(1349) Byers, J. H.; et al., 1955. Carotene in the ration of dairy cattle. I. The influence of long periods of suboptimal carotene intake on the carotene and vitamin A values of the blood, liver, and milk fat of dairy cows. Jour. Dairy Sci. 38(6): 657-663.

(1350) Byers, R. D., 1940. The California shark fishery. California Fish and Game 26(1): 23-38.

(1351) Byrn, N. and N. J. Eastman., 1943. Vitamin A levels in maternal and fetal blood plasma. Bull. Johns Hopkins Hosp. 73: 132-7.

(1352) Byrne, R. 1960. Oral anwendbares Mittel zur Forderung der Hautpigmentbildung. English Patent. 901 617.

(1353) Byshevskii, A. Sh., 1963. Influence of vitamin A on blood coagulation. Vrachebnoe Delo 4:77-9.

(1354) Byshevskii, A. Sh., 1966. Effect of nicotinic acid and vitamins A, $B_{12}$, and E on the lysis of intravascular thrombi. Vrachebnoe delo: 38-40.

(1355) Byshevskii, A. Sh., 1964. Vitamin A effects on fibrinolysis and fibrinogenolysis under experimental conditions. Vopr. Pitaniya 23(2): 17-21.

(1356) Byshevskii, A. Sh., 1964. Effect of vitamin A and nicotinic acid on some indices of the condition of the blood anti-coagulating system in experimental hypercholesteremia. Vop Pitan 23(5): 33-40.

(1357) Byshevskii, A. Sh., 1968. Effect of some vitamins on the blood anticoagulation system. Vop. Pitan. 27(5), 17-22.

(1358) Byshevskii, A. Sh., 1966. Effect of vitamin A on the protective reaction of the body to the injection of thrombin into the blood stream. Byul. Eksp. Biol. Med. 61(2): 34-36.

(1359) Cabell, C. A.; et al. 1943. Vitamin A activity of lean meat and fat from cattle fed various levels of carotene. Food Res. 8(6): 496-501.

(1360) Cabell, C. A. and N. R. Ellis., 1947. Improvement of vitamin A-deficient diets for use in bioassays. Proc. Soc. Exptl. Biol. Med. 65: 117-19.

(1361) F. Cacioppo and G. Cascio., 1947. Destruction of vitamin A by the digestive juices. I. Action in vitro of saliva and gastric juice on vitamin A. Boll. soc. ital. biol. sper. 23: 500-3.

(1362) Cady, O. H. and J. Murray Luck., 1930. Studies in the chemistry of vitamin A. Jour Biol. Chem. 86(2): 743-753.

(1363) Cahen, R.; et al. 1964. Untersuchung der teratogenen Wirkung von 2-Diathylaminopropiophenon. Med. exp. (Basel) 10: 201-204.

* (1364) Caffey, J., 1950. Chronic poisoning due to excess of vitamin A; description of the clinical and roentgen manifestations in seven infants and young children. Pediatrics 5(4): 672-688.

(1365) Caffey, J., 1951. Chronic poisoning due to excess of vitamin A. Description of the clinical and Rontgen manifestations in seven infants and young children. Am. J. Roentgenol. Radium Therapy 65: 12-26.

(1366) Caffey, J., 1952. Vitamin-A-Vergiftung. Die Erscheinungsformen u. die Diagnose der A-Hypervitaminose. Amer. J. Roentgenol. Radium Therapy. 67: 818-20.

* (1367) Calaustro, E. Q.; et al. 1968. Effects of retinoic acid and progesterone on reproductive performance in retinol-deficient female rats. J. Nutr. 95(4); 517-25.

(1368) Caldwell, Anne B.; et al. 1945. Bodily storage of vitamin A in relation to diet and age, studied by means of the antimony trichloride reaction using a photoelectric colorimeter. J. Nutr. 30 (5):349-353.

(1369) Caldwell, A. L., 1948. Report of the committee on vitamins and nutrition. Proc. Am. Drug Manufrs. Assoc. 170-7.

(1370) Caldwell, M. J. and D. B. Parrish., 1945. The effect of light on the stability of the Carr-Price color in the determination of vitamin A. J. Biol. Chem. 158: 181-6.

(1371) Caldwell, M. J.; et al. The response of different photometers to the color produced by vitamin A and carotene with antimony trichloride. Trans. Kansas Acad. Sci. 49: 197-204.

(1372) Caldwell, M. J., and J. S. Hughes., 1947. Effect of temperature on fading of the Carr-Price colors of vitamin A and common carotenoid pigments. Jour. Biol. Chem. 170(1): 97-103.

(1373) Calet, C., Blum, J. C. 1970. Effect of storage on vitamins in eggs. Annales de la Nutrition et de l"Alimentation 24. (2) B201-B225.

*(1374) Calhoun, M. C., et al. 1965. Cisternal cerebrospinal fluid pressure during development of chronic bovine hypervitaminosis A J. Dairy Sci. 48: 729-32.

(1375) Calhoun, M. C.; et al. 1967. Rates of formation and absorption of cerebrospinal fluid in bovine hypovitaminosis A. J. Dairy Sci. 50(9), 1386-94.

(1376) Calhoun, M. C.; 1968. Osmotic flow during ventriculocisternal perfusion of vitamin A-deficient calves. J. Dairy Sci. 51(11): 1781-1786.

(1377) Caligaris, F. 1955. Vitamin A -synergism between vitamins A and E in therapy of deafness and hearing loss. Minerva otorinolaring. 5: 184-187.

(1378) Callison, E. C., 1942. Consideration of the adequacy of biomicroscopy as a method of detecting mild cases of vitamin A deficiency. Science 95(2462): 250-251.

*(1379) Callison, E. C., and V. H. Knowles. 1945. Liver reserves of vitamin A and their relation to the signs of vitamin A deficiency in the albino rat. Amer. Jour Physiol. 143(3): 444-452.

(1380) Callison, E. C., and E. Orent-Keiles. 1947. Availability of carotene from carrots and further observations on human requirements for vitamin A and carotene. Jour. Nutrition 34(2): 153-165.

(1381) Callison, E. C.; et al., 1949. Comparison of chemical analysis and bioassay as measures of vitamin A value of some vegetables and the effect of comminution on the bioassay value. J. Nutrition 37 139-52.

(1382) Callison, E. C. ; et al., 1953. Comparison of chemical analysis and bioassay as measures of vitamin A value: yellow corn meal. Jour Nutrition 50(1): 85-100.

(1383) Calvi, P. 1941., The spleen and vitamin A. Boll. Soc. Ital. Biol. Sper. 16 61-2.

(1384) Calvo, R. R., 1952. Vitamin A-therapy of deafness. Medicina, Madrid (pt. 2) 20:317-337.

(1385) Calzetti, G. and M. Lato, 1949. Vitamin A and beta-carotene in milk of woman in normal condition. Clin. Pediat. 31: 497-511.

(1386) Calzetti, G., 1953. Vitamin A and beta-carotene in human milk in some experimental conditions. Clin. Pediat. 35 : 520-3.

(1387) Cama, H. R., and T. W. Goodwin, 1949. Studies in vitamin A. 9. The role of the thyroid in carotene and vitamin A metabolism. Biochem. Jour. 45(2): 236-241.

(1388) Cama, H. R. ;et al. 1951. Studies in vitamin A. 17 Spectroscopic properties of all-trans-vitamin A and vitamin A acetate, analysis of of liver oils. Biochem. Jour. 50(1): 48-59.

(1389) Cama, H. R. and R. A. Morton. 1953. Spectroscopic properties of vitamin $A_2$. Application to the assay of cod-liver oil. Analyst 78: 74-9.

(1390) Cama, H. R.; et al. 1955. The assessment of vitamin $A_1$ and $A_2$ potency in Indian marine and fresh-water fish-liver oils by spectrophotometric methods. Congr. Intern. Biochim., Resumes com communs., 3e Congr., Brussels 133.

(1391) Cama, H. R.; et al., 1957. The effect of thyroid activity on the conversion of carotene and retinene to vitamin A and on serum proteins. J. Nutrition 63(4): 571-583.

(1392) Cameron, H. C. 1929. High temperature deaths among experimental rats. Science 69(1796): 576.

(1393) Cameron, H. C., 1932. Vitamin A-ferrous iodide as substitute for vitamin A in rats. Science 76:18-19.

(1394) Cameron, H. C., 1936. Salivary secretion and the physiological mechanism of avitaminosis-A. Amer. Jour. Physiol. 115(1): 210-214.

(1395) Cameron, H. C., 1938. Changes in retention of water during progressive deficiency of vitamin A. J. Home Econ. 30 585-6.

(1396) Cameron, H. C., 1940. Vitamin A and night-blindness: Some studies on college students. Proc. West Virginia Acad. Sci. 13: 28.

(1397) Cameron, H. C., 1945. A nutrition study of West Virginia students. Bull. West Virginia Agric. Expt. Sta. 318. 8p.

(1398) Camp, A. A.; et al. 1955. Supplementary vitamin A and choline in the diet of the growing chick. Poultry Sci. 34 1134-8.

(1399) Campbell, D. A., and E. L. Tonks. 1949. Vitamin A, total carotenoids and thymol turbidity levels in plasma. Brit. Med. Jour. 1949. (4643): 1499-1501.

(1400) Campbell, D. A. and E. L. Tonks. 1962. Biochemical findings in human retinitis pigmentosa with particular relation to vitamin A deficiency. Brit. J. Ophthalmol. 46 151-64.

(1401) Campbell, D. A.; et al., 1964. Retinitis pigmentosa; vitamin A serum levels in relation to clinical findings. Exptl. Eye Res. 3 (4), 412-26.

(1402) Campbell, H. L; et al., 1945. Bodily storage of vitamin A in relation to diet and age studied by the assay method of single feedings. Jour. Nutrition 30(5): 343-348.

(1403) Campbell, I., 1941. Vitamin A-dark adaptation and miners' nystagmus. Brit. Med. J. 2:726-727.

(1404) Campbell, J. A., 1951. Assay of vitamin A. Can. Pharm. J. 84: 342-347.

(1405) Campbell, J. A., 1964. Vitamin A-Dietary factors affecting vitamin requirements. Proc. Nutr. Soc. 23:31-8.

(1406) Campbell, J. A., 1964. The Addition of Vitamins to Foods. Presented at the 7th National Conference, Canadian Inst. of Food Technology, Montreal, Que., Canada, 5/13-15/1964.

(1407) Carlo Camurati und G. Tessarolo., 1953. Veranderungen der Metachromasie bei experimentellen Avitaminosen mit besonderer Berucksichtigung des Fehlens von Vitamin $B_1$. Gazz. int. Med. Chirurg. 58(57). 335-40: 31/3.

(1408) Cantor, S. J. 1927. Vitamin A-eye diseases of dietetic origin with notes on case of ophthalmia. Med. J. Australia 1: 822-824.

(1409) Cannon, H. J. and O. F. Hixson., 1936. Evaporated milk. Effect of irradiation on vitamin A content. Ind. Eng. Chem. 28 1009--10.

(1410) Cannon, M. D., 1940. Failure of maternal vitamin A depletion to produce congenital anomalies in the young of rats. Proc. Soc. Exp. Biol. and Med. 44(1): 129-132.

(1411) Cannava, A and L. Cavalleri., 1950. Vitamin A-effect on blood pressure; experimental study. Arch. "E. Maragliano" pat. e. clin. 5:1181-1188.

(1412) Cappa, Vittorio. and Gianfranco Piva., 1963. Exhaustion and replenishment of vitamin A reserves in chicks. Ann. Fac. Agrar. Univ. Cattolica Sacr. Cuore 3(3): 583-92.

(1413) Cappa, V. and Bartolomeo Volpi., 1964. Variations in content of amino acids, carotene, and vitamin A in bovine colostrum during the first days after calving. Ann. Fac. Agrar., 4(1) 177-96.

* (1414) Cappellin, M. and P. Crepax., 1950. Effect of high levels of vitamin A on the bone system of the albino rat. Boll. Soc. Ital. Biol. Sper. 26: 1495-7.

(1415) Capper, N. S., 1930. Carotene and vitamin A. The transformation of carotene into vitamin A as shown by s study of the absorption spectra of rat-liver oils. Biochem. Jour. 24(4): 980-982.

(1416) Capper, N. S.; et al. 1931. Carotene and vitamin A. The conversion of carotene into vitamin A by fowl. Biochem. Jour. 25(1): 265-274.

(1417) Capper, N. S., 1933. Recent advances in the knowledge of vitamin A. J. State Med. 41: 175-9.

(1418) Capurro, P.; et al., 1960. Studies in squamous metaplasia in rat bladder. 1. Effects of hypovitaminosis A, foreign bodies, and methylcholanthrene. Cancer Res. 20:563-7.

(1419) Cappuro and A. Angrist., 1962. Sulfhydryl and disulfide groups in squamous metaplasia in the urinary bladder of the rat. Arch. Pathol. 73: 325-32.

(1420) Capurso, A., and Bruno Traballesi. 1963. Addition of various substances to commonly used diluents of bull semen and their effect on the motility and the survival of the sperm. Atti. Soc. Ital. Sci. Vet. 16 Pt. II, 188-92.

(1421) Cara, S. Almansa de., 1940. Vitamin A and ascorbic acid therapy of tuberculosis. Rev. Clin. Espan. 1:528-541.

(1422) Cardoso, H. T., 1943. Studies on shark-liver oil. Mem. Inst. Oswaldo Cruz 39: 361-83.

(1423) Cardoso, H. T., 1946. Studies on shark liver oils. - II. Mem. Inst. Oswaldo Cruz 44(2): 215-220.

(1424) Cardoso, H. T., 1949. Studies on oils of fish livers. III. Fresh Water Fish.. Mem. Inst. Oswaldo Cruz 47(3/4):557-570.

(1425) Careddu, G. and G. Preto., 1935. Vitamin-A-effect of ultra-violet rays on vitamins A. B and C in fresh cow's milk. Riv. Di. Clin. Pediat. 33:167-209.

(1426) Careddu, P.; et al. 1963. Effect of gluten on the absorption and intestinal permeability during remission of celiac disease. Boll. Soc. Ital. Biol. Sper. 39(21) 1235-8.

(1427) Carinci, M. P., 1957. Influence of hypervitaminosis A on ovary. Histomorphological and cytochemical research on rabbits. Vitaminologia (Rome) 15: 1-11.

(1428) Carleton, A., and D. Steven. 1943. Keratosis Follicularis. A study of four cases. Arch. Derm. Syph. 48(2): 143-150.

(1429) Carli, G., 1953. Vitamin A-associated vitamins A and D2 in therapy of acne vulgaris; 2 cases. Minerva dermat. 28:12-13.

(1430) Carlson, S. D., 1967. Vitamin A deficiency: Effect on retinal structure of the moth Manduca sexta. Science, 158(3798): 268-270.

(1431) Carmen, E., R. Valenzuela. 1954. Effect of cooking on the content of vitamins A and C in cow milk. Anales Fac. Farm. y Bioquim. 5 267-73.

(1432) Carminati, V. and T. Baglioni. 1955. Vitamin A- epithelial modifications secondary to avitaminosis A in experimental oncogenesis of rat. Tumori: 41:655-653.

(1433) Carminati, V. and T. Baglioni., 1955. Epithelial changes caused by vitamin A deficiency in experimental tumor formation in rats. Atti Soc. Lombarda Sci. Med. Biol. 10 185-6.

(1434) Carminati, V. and T. Baglioni., 1961. Collateral hypoplasia experimental oncogenesis in the rat. 1. Observations during avitaminosis A combined with depilation. Tumori 47:1-12.

(1435) Carminati, V., and T. Baglioni., 1961. Collateral hyperplasia in the experimental oncognesis in the rat. Observations in animals treated by Vitamin A. Tumori 47(3): 211-216.

(1436) Carmona, J., 1950. Increasing the concentration of vitamin A in dogfish liver oil. Rev. Fac. Cienc. Quim. 25:55-63.

(1437) Caro, L. and A. Locatelli., 1936. Vitamin A, $B_1$ and $B^2$ contents of yolk of cooked and raw hen eggs. Quaderni Nutriz. 3: 187-91.

(1438) Caro, L. De., and Grete Perling. 1936. A, B and C vitamins in canned tomatoes. Quaderni Nutriz. 3; 64-81.

(1439) Caro, L. de und A. Locatelli., 1936. Uber den Gehalt an den Vitaminen A, $B_1$ und $B_2$ im rohen und im gekochten Hihnereidotter. Quad. Nutriz. 3: 187-91.

(1440) Caro, L. de., 1937. Avitaminosis A plus B in rats. Boll. Soc. Ital. Biol. Sper. 12 617-18.

(1441) Caro, L. de and Amedea Locatelli., 1937. Vitamins A, $B_1$, C and D in bananas from Italian Somaliland. Quaderni Nutriz. 4; 32-42.

(1442) Caro, L. de and J. Franceschini., 1939. The content of vitamins A and $B_1$ in walnuts, hazelnuts, almonds and peanuts. Quaderni Nutriz. 6: 82-6.

(1443) Carpenter, E. and A. K. Holmgren., 1960. The effect of excess vitamin A on the basal metabolism and on the histology of the thyroid and anterior pituitary glands of young female rats.

(1457) Carruthers, C., 1942. The effect of carcinogens on the hepatic vitamin A stores of mice and rats. Cancer Res. 2(3): 168-174.

(1458) Carruthers, C., and V. Suntzeff., 1954. The influence of some vitamin deficient diets on a substance characteristic of the epidermis of the mouse, rat and man. Jour. Invest. Dermatol. 23(2): 77-83.

(1459) Carstensen, J. T., 1964. Modellversuche zur Stabilitat von Vitamin A in verschiedenen pharmazeutischen Zubereitungen. J. Pharmac. Sci. 53: 839-40.

(1460) Cartland, G. F. und F. C. Koch., 1928. Die Eiwei-beta-korper der kost und die Vitamine in ihrer Beziehung zur Hamoglobinbildung bei der Ratte. Amer. Journ. Physiol. 87: 249-61.

(1461) Caruana, M.and B. Hamza., 1953. Vitamin A-acute benign hydrocephalus of nursing due to hyper-vitaminoisis. Arch. Franc., Pediat., 10:982-983.

(1462) Caruso, I.; et al. 1968. Osteocartilaginous changes induced by vitamin A in rabbits. Reumatismo 20:427-33.

(1463) Carvalho, E. de Rios., 1957. Vitamin A in teleost fishes. Anais Assoc. Brasil. Quim. 16: 113-15.

(1464) Casa, R. della, & A. Grignolo., 1946. Vitamin A-hypovitaminosis in school children of Rome in relation to wartime nutrition. Arch. Ital. Pediat. e Puericolt. 11:301-316.

(1465) Casassa, P. M. and M. Pescarmona., 1940. Vitamin A-therapy of hyperthyroid conditions. Minerva Med. 1:425-428.

(1466) Casati, R., 1963. Relation between orotic acid and vitamin A. Atti. Soc. Ital. Sci. Med. 16 (2): 30-2.

(1467) Caselli, R., 1967. Biosynthesis of vitamins. Riv. Zootec. 40(4) 252-4.

(1468) Casorati, V. and Stelio Crifo. 1954. Histological and histochemical study of salivary glands and of esophagus of white rats fed a vitamin A- deficient diet. Ann. Laringol., Otol., Rinol. e Faringol. 53: 97-121.

(1469) Casorati, V., 1954. Vitamin A-histologic modifications of pharyngeal mucosa of white rat in vitamin A deficiency; Valsalva 30:197-203.

(1444) Carpenter, W. E., 1962. An evaluation of injectable vitamin A concentrate in the treatment of corns and calluses. J. Amer. Podiat. Asso. 52:120-1.

(1445) Carpenter, E. and J. Braude., 1964. The effects of excess vitamins A and K on the pituitary basophils of the female Sprague-Dawley rat. J. Cell. Biol. 23(2): 113A.

(1446) Carr, F. H. und E. A. Price. 1926. Uber dem Vitamin A eigene Farbreaktionen. Biochemical Journ. 20: 497-501

(1447) Carr, M. C., 1967 Human term placenta villi in explant tissue culture: III. Comparison of the effects of chicken plasma, sheep plasma, vitamin A, and hydrocortisone in synctial dissolution. Amer. J. Obstet Gynecol. 97(2): 252-256.

(1448) Carr, R. E.; et al. 1966. Vitamin A-Rhodopsin and the electrical activity of the retina in congenital night blindness. Invest. Ophthal 5:497-507.

(1449) Carr. W. R., 1961. Die Anreicherung von walzengetrockneter Magermilch mit Vitamin A. Rhodesia agric. J. 58: 38-41.

(1450) Carrante, V., 1941. Pigments of Italian oranges. Ann. r. taz. sper. fruiticolt. agrumicolt. Acireale 16: 193-236.

(1451) Carrau, A. 1932. Vitamin A-effects of avitaminosis on visual organs in children. Arch. de Pediat. d. Uruguay 3:249-256.

(1452) Carricaburu, P.; et al., 1970. Action of astaxanthine on the electroretinogram of the rat deficient in vitamin A. C. R. Acad. Sci. 270:1282-3

(1453) Carroll, J. und B. Spencer., 1965. Vitamin A und Sulfotransferasen in fetaler Rattenleber. Biochem. J. 96: 3, Proc. Biochem. Soc. 78p.

(1454) Carroll, K. K., 1959. The growth-retarding effect of erucic acid and its relation to requirements for fat-soluble vitamins. Can. J. Biochem. and Physiol. 37: 731-40.

(1455) Carroll, K. K., 1964. Gas-liquid chromatography of fat-soluble vitamins. J. Amer. Oil Chem. Soc. 41(7):473-474.

(1456) Carron, D. B. and A. F. Douglas., 1965. Steatorrhea in vascular insufficiency of the small intestine. Quart. J. Med. 34(3): 331-44.

(1470) Casorati, V.andS. Crifo., 1954. Vitamin A-histochemical observations of pharyngeal tissue of white rat on deficient diet; Valsalva 30: 260-270.

(1471) Casorati, V. and S. Crifo., 1955. Histomorphological and histochemical alterations of first aerial ways of white rat in vitamin A deficiency. Minerva Otorinolaringol. 5: 171-8.

(1472) Casorati, V.andS. Crifo., 1955. Vitamin A-histologic and histochemical studies of tissue of back of mouth of rat on deficient diet. Minerva Otorinolaring. 5:275-290.

(1473) Caspari, W.; et al., 1929. Vitamin A-inhibition of growth of inoculation tumors by diet deficient in carbohydrates and vitamins. Ztschr. f. Krebsforsch. 29:334-350.

(1474) Caspari, W. & F. Ottensooser., 1929. Vitamin A-effect of diet rich in vitamins A and B on growth of inoculation tumors. Ztschr. f. Krebsforsch. 30:1-23.

(1475) Castano, F. F.; et al., 1951. Utilization by the chick of vitamin A from different sources. I. Crystalline carotene, crystalline vitamin A acetate and "black cod" liver oil. Jour Nutrition 45(1): 131-141.

(1476) Castellanos, A.andE. Galan Conesa., 1937. Vitamin A-cutaneous form of avitaminosis in children, with report of case. Bol. Soc. Cubana de Pediat. 9:402-417.

(1477) Castellanos, A. O., 1939. Vitamin A contents of liver oils of Argentine fish. Rev. Inst. Bacterial. Dept. Nacl. Hig. 9: 227-37.

(1478) Caster, O. W.andO. Mickelsen., 1955. Vitamin A-serum level: critique of methods and significance. Am. J. Clin. Nutrition 3:409-417.

(1479) Castex, M. R. und M. Schteingart, 1938. Die Hypovitaminose in der Klinik. Prensa Med. Argent. 25: 2437-44.

(1480) Castex, M. R.; et al., 1940. Vitamin A-hypovitaminosis in vascular diseases, with special reference to intermittent claudication and endarteritis obilterans. Prensa Med.Argent. 27: 1009-1012.

(1481) Castle, D. C.; et al., 1933. Adsorptionsversuche mit Vitamin-A-Konzentraten. Vgl. C. IL 3113. 3626. Biochemical J. 28 1702-11.

(1482) Causeret, J.; et al., 1962. Influence of storage conditions on the nutritive value of sterilized milk. Intern. Dairy Congr., Proc., 16th, Copenhagen, 1 849-57.

(1483) Caussade, L.; etal., 1938. Vitamin A-hemeralopia in provoked Hypovitaminosis. Bull. Soc. d'opht. de Paris 50: 276-281

(1484) Caussade, L.; etal., 1938. Vitamin A-ocular tests of hypovitaminosis in children of school age. Bull Soc. Pediat. de Paris 36: 554-560.

(1485) Caussade, L.; et al., 1938 A study of the visual testing for A-hypovitaminosis in school children. Rev. Franc. Pediat. 14:Plasia 209-23.

(1486) Cavalaris, C. J., 1967. Vitamin A-produced mucous metaphasia. J. Oral Ther. 3:452-61.

(1487) Cavalaris, C. J.; et al., 1969. Histochemistry of the mucins of vitamin A produced mucous metaplasia in hamster. Arch. Oral Biol. 14(11): 1313-1322.

(1488) Caveness, H. L.; et al., 1941. Vitamin-A-correlation of results of biophotometer test with vitamin content of human blood. Arch. Ophth. 25:827-832.

(1489) Cavina, G., 1956. Colorimetric behavior of vitamin A with dilute solutions of antimony trichloride: A new test for vitamin A. Ann. Chim. (Rome) 46: 43-61.

(1490) Cavina, G., 1957. Analysis of fat-soluble vitamins in wate. dispersed preparations. Rend. Ist. Super. Sanita 20 900-912

(1491) Cavina, G. 1957. The use of antimony trichloride reagent, one per cent in chloroform, for the determination of vitamin A. Rend. Ist. Super. Sanita 20: 913-922

(1492) Cawthorne, M. A.; et al. 1968. On the relationship between vitamin A and vitamin E in the rat. Brit. J. Nutr. 22(1): 133-143.

(1493) Caxel, W., und H. Schotola. 1941. Uber den Einfluss des A-Vitamins und des Sesamols auf die Zahl der Blutplattchen. (Effect of vitamin A and sesame oil on thrombocytes.) Klin. Wochenschr. 20: 1119-1121.

(1494) Cayer, D.; et al., 1945. Vitamin A-levels in sprue. Am. J. Med. 210: 200-207.

(1495) Castle, D. C.; et al., 1934. Absorption experiments with vitamin A concentrates. Biochem. J. 28 1702-11.

(1496) Castrelos, O., 1959. Analysis of vitamin A. Rev. Farm. (Buenos Aires) 101; 15-19.

(1497) Castren, E., 1961. Die Bestimmung von Vitamin E in Gegenwart von Vitamin A in pharmazeutischen Praparaten. Farmac. Notisbl. 70: 181-86.

(1498) Castren, E., 1962. Uber die Dunnschichtchromatographie der Vitamine A, D und E in Multivitamin-Zubereitungen. Farmac. Notisbl. 71: 351-57.

(1499) Castren, E., 1965. Thin-layer chromatography of vitamins A, D, and E in multi-vitamin preparations. Anales. Farm. Hosp. 8(15): 31-5.

(1500) Catel. W. Klinische und tierezperimentelle Studien uber die normale and pathologische Physiologie des A-Vitamins. Klin. Wschr. 17: 574-575.

(1501) Catel, W., 1938. Clinical and experimental studies on the normal and pathological physiology of vitamin A. Monatsschr. Kinderheilk. 73: 316-44.

(1502) Catel, W.andH. Schotola., 1941. Vitamin A-effect of vitamin and of sesame oil on number of blood platelets. Klin. Wchnschr. 20:1119-1121.

(1503) Catel, W., 1943. A-Vitamin und Thrombocyten. Klin. Wochenschr. 22: 573-574.

(1504) Catel, W.; et al., 1953. A new method for the preservation of mothers raw milk. Deut. Med. Wochschr. 78: 1137-40.

(1505) Cattaneo, C.; et al., 1951. Vitamin-A-pathogenesis of hypovitaminosis A in tuberculosis; action of lipotropic substances on titer of vitamin A and carotene in blood of patients. Lotto Contro Tuberc. 21: 44-58.

(1506) Causeret, Jean., 1947. Influence des huiles minerales sur l'utilisation of vitamin A and provitamins A by higher animals and by man. Bull. Soc. Sci. Hyg. Aliment. 35(7/8/9): 235-238.

(1507) Causeret, J.; et al., 1961. Changes of riboflavin and vitamin A levels in sterilized milk over a long period. Ann. Technol. Agr. 10:289-99.

(1508) Cayer, D.; et al., 1947. Plasma vitamin A levels in pregnancy. Amer. Jour. Obstet. and Gynecol. 54(2): 259-265.

(1509) Celdran, F., 1936. Vitamin A-follicular hormone and vitamin A: possible biologic relationship and clinical importance. Med. ibera. 1: 565-579.

(1510) Celso, P. M. di., 1958. Verfahren zur raschen Kontrolle des Gehaltes an Vitamin A in vitaminisierten Futtermittein. Ann. Sperimentaz. agrar. (N. S.) 12. Nr. 2: Suppl. I-III.

(1511) Celso, P. M. di., 1963. Variation in the components of the mammary secretion of buffaloes during the first week after parturition. Ann. Ist. Sper. Zootec. Roma. 10: 321-345.

(1512) Cerecedo, L. R.; et al., 1953. Nucleic acid changes in rat receiving butter yellow, and the effects of vitamin A deficiency on these changes. Exptl. Med. and Surg. 11(1): 31-45.

(1513) Cerny, L., 1966. Vitamin A- Treatment of inner ear disorders by a combination of ATP, nicotinic acid and vitamins A and E. Cesk. Otolaryng. 15: 39-45.

(1514) Cerruti, L., 1945. Male sex glands and vitamin A. Boll. Soc. ital. biol. sper. 20: 775-777.

(1515) Chabre, P., 1936. Les Huiles de foie de morue. Leur teneur on vitamines A et D. Illus. Mason et Cie: Paris. 207p.

(1516) Chacko, P. I., 1947. Extraction of visceral oil from inland water fishes in the Collair Lake Area. Madras. Current Sci. 16(9): 288-289.

(1517) Chagovets, R. V. and A. A. Dusheiko., 1961. Radioactive methionine incorporation into protein fractions of serum of normal and avitaminosis-A rats. Ukrain. Biokhim Zhur. 33: 676-682.

(1518) Chagovets, R. V. and G. V. Donchenko., 1965. Content and distribution of ubiquinone (coenzyme Q) in the liver cells of normal and vitamin A-deficient rats. Mitokhondrii, Strukt. Funkts., Mater. Simp., Moscow. 115-116.

(1519) Chahine, M. H.; et al., 1967. A note on the stabilization of vitamin A in the Red Sea shark liver oil. Grasas Aceties. 18(3): 159-162.

(1520) Chaikovskaya, M. Ya., 1949. Influence of external and internal factors on reproduction in geese. Zhur. Obshchei Biol. 10: 332-347.

(1521) Chain-Makarowa, G. A., 1953. Die Beduteutung von Vitamin A and B fur das Skelettwachstum. Arch. Pathol. 15. Nr. 2: 66-72.

(1522) Chakrabarty, Asit K. and S. K. Dutta., 1966. Changes in plasma proteins and liver nucleic acids during immunization with microbial toxin. II. Effect of growth promoting factors. Indian J. Biochem. 3(1): 30-32.

(1523) Chakrabarty, Asit K. and S. K. Dutta., 1967. Changes in plasma proteins and liver nucleic acid during immunization with microbial toxin. Indian J. Med. Res. 55(2): 130-144.

(1524) Chakravarti, R. N. and P. C. Maiti., 1953. Analysis of some cooked diets. Bengali. Indian Med. Gaz. 88:626-639

(1525) Chakravorty, P. N.; et al., 1933. Vitamin A in fish-liver oils. J. Indian Chem. Soc. 10: 361-366.

(1526) Chalier, J., et M. Jeune., 1938. L'hypervitaminose a experimentale due cobaye. Compt. Rend. Soc. Biol. 129(29):604-606.

(1527) Chanda, R., 1956. Effect of L-thyroxine on carotene and vitamin A metabolism in the cow and the chick. Nature, 178: 541-542.

(1528) Chandrasekhara, M. R.; et al., 1962. Nahrwert eines biskuitahnlichen proteinreichen Produkts mit Erdnusproteinsubstrat und Casein sowie Calcium- und Vitaminzusatzen. Food Sci. (Mysore, India) 11: 27-31.

(1529) Chandrasekharan, N., 1969. The Malaysian sea turtle eggs as a source of vitamin A (human). x Med. J. Malaya. 23(3): 214-215.

(1530) Chao-Yu, Chen., 1936. The vitamin content of Chinese mushrooms. Nutrition Bull. 3: 11-22.

(1531) Chao-Yu, Chen., 1941. The nutritive value of silkworm pupa. Nutrition Bull. 1: 1-7.

(1532) Chapman, T. L., 1946. The aetology of urinary stone. Glasgow Med. Jour. 27(12): 384-391.

(1533) Chapman, D. G.; et al. 1949. The influence of gonadal hormones on the serum vitamin A of the immature pullet. Can. J. Research 27D: 37-42.

(1534) Chapman, D. G. und J. A. Campbell., 1951. Eine Bemerkung uber die Herstellung des Tocopherol-Blindwertes in Der Bestimmungsmethode fur Vitamin A nach Fox und Mueller. J. Amer. pharmac. Assoc. sci. Edit. 40: 252.

(1535) Charavanapavan, C., 1951. The vitamin A contents of Ceylon leafy vegetables. Trop. Agr. (Ceylon) 107: 23-24.

(1536) Charkey, L. W.; 1947. The nutrient content of high- and low-quality fresh eggs. I. Total solids, total nitrogen, and tryptophan. Poultry Sci. 26: 626-31.

(1537) Charkey, L. W.; et al., 1947. The nutrient content of high and low quality fresh eggs. II. Vitamins. Poultry Sci. 26(6): 632-634.

(1538) Charpentier, G., 1936. Vitamin A-electroretinogram of normal and hemeralopic (A-deficient) rats. Acta ophth., supp: 9: pp. 1-85.

(1539) Charpentier, G., 1936. Vitamin A-electrical retinal responses of normal and hemeralopic (A-deficient) rats. Acta ophth. 14: 25-27.

(1540) Charters, A. D., 1943. The causation of tropical ulcer. Trans. Roy. Soc. Trop. Med. Hyg. 37: 205-215.

(1541) Chalier, J. et al., 1938. Relation between vitamin A and blood cholesterol. Compt. rend. soc. biol. 129: 606-608.

(1542) Chamberlain, C. C.; et al., 1948. Some effects of cobalt in the sheep ration. J. Animal Sci. 7: 523.

(1543) Chanda, R., and E. C. Owen., 1951. The partition of vitamin A activity in human milk. Biochem. Jour. 48(3): 42-43.

(1544) Chanda, R.; et al., 1951. Effect of thyroxine, thiouracil and stilboestrol on the metabolism of carotene and vitamin A in lactating goats. Biochem. Jour. 50(2) 3.

(1545) Chanda, R.; et al., 1951. The composition of human milk with special reference to the relation between phosphorus partition and phosphatase and to the partition of certain vitamins. Brit. J. Nutrition.5: 228-242.

(1546) Chanda, R. and E. C. Owen., 1952. Influence of infection of the mammary glands on the carotenoids, vitamin A, phosphatase and phosphoric esters of cow milk. Congr. intern. biochim., Resumes communs., 2e Congr., Paris, 254.

(1547) Chanda, R. and E. C. Owen., 1952. The effect of dietary carotene on the partition of carotenoids and vitamin A in the blood serum of lactating cows. Congr. intern. biochim., Resumes communs. 2e Congr., Paris, 328; cf.

(1548) Chanda, R., 1952. The partition of carotenoids and vitamin A in the milk of cows and goats throughout lactation. Biochem. Jour. 52(1):2.

(1549) Chanda, R. and E. C. Owen., 1952. Effect of thyroxine and thiouracil on the composition of milk. II. Carotene and vitamin A content. Biochem. J. 51: 404-417.

(1550) Chanda, R., 1953. The partition of carotenoids and vitamin A in the colostrum and milk of the cow and the goat. Jour. Agric. Sci. 43(1): 54-71.

(1551) Chanda, R.; et al., 1954. Dietary carotene and the degree of esterification of vitamin A in the milk and blood of cows. Biochem. Jour. 56(3): 453-458.

(1552) Chanda, R.; et al., 1955. Blood and milk vitamin A alcohol and ester as affected by treatment of the cow with thyrotropin in the presence and absence of dietary carotene. Voeding.16: 778-781.

(1553) Chatain, H. and Marcel Debodard., 1951. Determination of vitamin A: Ultraviolet absorption spectrum and Carr-Price reaction of kitol and its ester. Compt. rend. 233: 105-107.

(1554) Chatain, H., and M. Debodard. 1951. On the determination of vitamin A. Absorption spectrum of neo-axerophtol. Compt. Rend. Acad. Sci. Paris, 232(4): 355-357.

(1555) Chatelain, P., 1933. Les vitamines A dans l'alimentation des herbivores. Bull. Soc. Vet. Lyon. 36(4):223-236.

(1556) Chatterjee, Amar., and Chandicharan Deb., 1964. The effect of excess vitamin A on estrogen-induced cytochemical changes in uterus. Acta Histochem. 19(5/8): 275-279.

(1557) Chatterjee, A.; et al., 1965. The role of ascorbic acid in the inhibition of estrous cycle in hypervitaminosis-A. Anat. Anz. 116:6-10.

(1558) Chatterjee, I. B., 1955. Effect of the nature and levels of dietary fat on the utilization of vitamin A by albino rats. Ann. Biochem. and Exptl. Med. (India) 15(4): 181-190.

(1559) Chatzinoff, A. B.; 1962. Mittel zur Behandlung von Retinitis pigmentosa. English Patent: 890 638.

(1560) Chatzinoff, A. B. and William Oroshnik., 1965. Combating retinitis pigmentosa. United States Patent:3, 196,078.

(1561) Chatzinoff, A.; et al., 1958. 11-cis-Vitamin-A zur Verhinderung der Netzhautstabchendegeneration. Amer. J. Ophthalmol. 46. Nr. 5. Part 2. Proc. Assoc. Res. Ophthalmol. :205-210.

(1562) Chatzinoff, A., 1968. Eleven cis vitamin A in the treatment of retinitis pigmentosa. A negative study. Arch Ophthalmol. 80(4): 417-419.

(1563) Chauchard, B.; et al., 1944. Alterations in the excitability of organs during avitaminosis. Compt. rend. 219: 262-264.

(1564) Chauchard, P., 1941. Pharmacological action of vitamin A and carotene on the nervous system of animals not in a state of deficiency. Compt. rend. soc. biol. 135: 1428-1431.

(1565) Chauchard, P. and H. Mazque., 1941. Determinisme des variations d'excitabilite' nerveuse dans l'avitaminose A. Compt. Rend. Soc. Biol. 135 (17/18): 1432-1434.

(1566) Chauchard, P., 1942. Effects of small doses of vitamins on the nervous system. Bull. soc. chim. biol. 24: 182-185.

(1567) Chauchard, P.; et al., 1946. Comparison of the rapidity of action of vitamin A and carotene in the correction of the chronaximetric disturbances of avitaminosis A in the rat; inactivity of vitamins B and E. Compt. rend. soc. biol. 140: 745-746.

(1568) Chauchard, P.; et al., 1946. Efficacy of vitamins in the struggle against acidosis or alkalosis. Compt. rend. 222: 818-820.

(1569) Chauchard, P.; et al., 1948. Influence of various vitamins on the nervous effects of adrenaline, acetylcholine, choline, and adrenochrome. Compt. rend. soc. biol. 142: 1346-1348.

(1570) Chaudhry, A. P.; et al., 1961. Effects of vitamin A deficiency on experimental carcinogenesis in submandibular glands of hamsters. Jour. Dental Res. 40(2): 327-330.

(1571) Chaves, J. M.; et al., 1948. Chemical and nutritional studies on palm fruits. Rev. quim. ind. (Rio de Janeiro) 17, No. 198: 14-16.

(1572) Chavez, A.; et al., 1970. Various data on the prevention of hypovitaminosis A in Mexico. Bol. Ofic. Sanit. Panamer. 69:21-29.

(1573) Chechan, C.; et al., 1946. Study of the vitamin A of fish-liver oils by ultraviolet Spectrophotometry. I. Changes in the absorption spectra after molecular distillation. Bull. soc. chim. biol. 28: 577-585.

(1574) Chen, J. S.; et al., 1955. Determination of vitamin A, carotene, thiamine, riboflavine, and ascorbic acid contents of Chinese foods. Chemistry(Taiwan) No. 3: 187-192.

(1575) Chen, J. S.; et al., 1956. Intake, blood level, and urinary excretion of vitamin A, carotene, thiamine, riboflavine, and ascorbic acid in Chinese men. I. Dietary survey and plasma levels of vitamin A and carotene. Chemistry (Taiwan) 67-73.

*(1576) Chen, P. S. Jr.; et al., 1963. Column partition chromatography of vitamins A and D on Fluoropak 80. Anal. Chem. 35 (13): 2030-2032.

(1577) Cheraskin, E.; et al., 1970. Familial dietary patterns: daily vitamin A consumption in the dentist and his wife. Int. Z. Vitaminforsch 40:125-30.

(1578) Cherasskow., Ss.G., 1961. Zusammensetzung, Eigenschaften und Nahrwert der Kamelmilch. Fragen d. Ernahr. 20: Nr. 5: 69-72.

(1579) Cherkes, L. A., 1938. Treatment of pigmented inflammation of the retina with vitamin A. Bull. biol. med. exptl. U. R. S. S. 6: 451-453.

(1580) Cherkes, L. A., 1939. Avitaminosis and the digestive organs. Uspekhi Sovremennoi Biol. 11, No. 1: 54-65.

(1581) Cherkes, L. A.; et al., 1950. Vitamin A-in retinitis pigmentosa. Vestnik oftal. (1) 29: 33-40.

(1582) Chernukha, V. K., Role of nutrition in the etiology of gastrointestinal diseases in newborn calves. Nauchn. Tr. Zootekhn. Fak. Khar'kovsk. Zoovet. Inst. 1: 22-31.

(1583) Chernysheva, M. I., 1953. A-avitaminotic hepatitis of sheep. Veterinariya 30: No. 11, 33-35.

(1584) Chesney, J. and A. B. McCoord., 1934. Vitamin A of serum following administration of haliver oil in normal children and in chronic steatorrhea. Proc. Soc. Exptl. Biol. Med. 31: 887-888.

(1585) Chevallier, A. and Pierre Chabre., 1933. Determination of vitamin A in oils by a spectrophotometric method. Biochem. J. 27: 298-302.

(1586) Chevallier, A. and Pierre Chabre., 1933. Determination of Vitamin A in oils. Compt. rend. soc. biol. 112:375-376.

(1587) Chevallier, A. and Pierre Chabre., 1934. Determination of vitamin A in oils by spectrophotometric methods. Bull. Soc. chim. biol. 16: 1451-1478.

(1588) Chevallier, A.; et al., 1934. Vitamin A-Influence of massive doses on animals on normal diet. Compt. rend. Soc. de biol. 115: 541-543.

(1589) Chevallier, A.andP. Chabre., 1934. Vitamin A-correspondence of results of spectrophotometric and biologic methods in titration. Compt. rend. Soc. de biol. 115: 773-775.

(1590) Chevallier, A. and H. Baert., 1934. Vitamin A-influence on metabolism of rat and guinea-pig. Compt. rend. Soc. de biol. 116: 1037-1039.

(1591) Chevallier, A.; et al., 1934. Substanz A', ein Zwischenprodukt bei der Bildung von beta-Jonon aus Vitamin A. C. R. hebd. Seances Acad. Sci. 198: 2207-2208.

(1592) Chevallier, A., 1935. Ultraviolet spectrophotometry and its application in biological analyses. Bull. soc. chim. biol. 17:530-547.

(1593) Chevallier, A. and Yvonne Choron., 1935. Presence of vitamin A and derived substance A' in hepatic tissue. Compt. rend. soc. biol. 118: 159-162.

(1594) Chevallier, A.; et al., 1935. Influence of vitamins A and B on the metabolism of the rat. Compt. rend. soc. biol. 118: 574-576.

(1595) Chevallier, A. and Y. Choron., 1935. Detection of vitamin A in the blood. Compt. rend. soc. biol. 118: 889-891.

(1596) Chevallier A., and Henri Roux., 1935. Respiration of tissues containing variable quantities of vitamin A. Compt. rend. soc. biol. 118: 1348-1349.

(1597) Chevallier, A.; et al., 1935. Influence of the nervous system on the vitamin A of the blood. Compt. rend. soc. biol. 119: 739-740.

(1598) Chevallier, A. and Y. Choron., 1935. Variations in the vitamin A content of the liver. Compt. rend. soc. biol. 120: 1223-1225.

(1599) Chevallier, A. 1936. Vitamin A- function in adult organism. Medecine 17: 706-609.

(1600) Chevallier, A., and P. Dubouloz. 1936. Vitamin A-photochemical destruction in alcoholic medium. Bull. Soc. Chim. biol. 18: 703.

(1601) Chevallier A. and P. Dubouloz., 1936. Use of the spectrophotometric method to determine photosensitive substances by their rates of destruction. Bull. soc. chim. biol. 18: 190-194.

(1602) Chevallier, and M. Y. Choron. 1936. Sur la teneur du foie en vitamine A et ses variations. Compt. Rend. Soc. Biol. 120(40): 1223-1225.

(1603) Chevallier, A. and P. Dubouloz., 1936. Vitamin A-method for determination of very small quantities in blood or complex media. Compt. rend. Soc. de biol. 121:59-61.

(1604) Chevallier. A. and L. Espy., 1936. Vitamin A-relation between motor caronaxia and vitamin content of liver of normal guinea-pigs. Compt. rend. Soc. de biol. 121: 820-822.

(1605) Chevallier, A., and Yvonne Choron., 1936. Accumulation of vitamin A reserves in the guinea pig. Compt. rend. soc. biol. 121: 1015-1016.

(1606) Chevallier, A.; et al., 1936. Vitamin A-influence of solvents on spectral curve of vitamin and on its photochemical deterioration. Compt. rend. Soc. de Biol. 121:1495-1498.

(1607) Chevallier, A. and L. Espy., 1936. Vitamin A-influence of hepatic vitamin reserve on subordination chronaxia. Compt. rend. Soc. de biol. 122: 217-219.

(1608) Chevallier, A., and L. Espy., 1936. Vitamin A-influence of thyroxine on motor chronaxia of animals with varying hepatic vitamin reserves. Compt. rend. Soc. de biol. 122: 955-957.

(1609) Chevallier, A.; et al., 1936. Vitamin A-seasonal variations of vitamin reserve and motor chronaxia in guinea-pigs. Compt. rend. Soc. de biol. 123: 909-910.

(1610) Chevallier, A., 1937. Uber die Bestimmung des Vitamin A. Congr. int. techn. chim. Ind. agric. Scheveningue. C. R. 5, 1: 36-38.

(1611) Chevallier, A. and L. Espy., 1937. Vitamin A-relation between vitamin content of liver and motor chronaxia. Nutrition 7: 51-56.

(1612) Chevallier, A., 1937. Vitamin A-Factors causing variation of hepatic reserve. Nutrition 7:143-146.

(1613) Chevallier, A. and L. Espy., 1937. Vitamin A-relation of vitamin content of liver to motor chronaxia; study in alcoholic cirrhoses. Rev. neurol. 67: 105-107.

(1614) Chevallier, A. und Y. Choron., 1937. Untersuchungen uber vergleichsweise Gehalte der Leber und des Gehirus von Meerschweinchen an vitamin in A und Ascorbinsaure. Ann. Physiol. Physicochim. biol. 13:988-991.

(1615) Chevallier, A. and R. Jullien., 1938. Influence of hepatic reserves of vitamin A on the metabolism of the normal guinea pig. Compt. rend. soc. biol. 127: 539-541.

(1616) Chevallier, A., et Y. Choron., 1938. Sur l'existence de deux formes chimiques de la vitamine A:l'phemo etl'phepato vitamine A. Compt. Rend. Soc. Biol. 127(14): 1443-1445.

(1617) Chevallier, A.; et al., 1938. Vitamin A-influence of hepatic vitamin reserve on pleural reactions in guinea-pig. Compt. rend. Soc. de biol. 128: 916-917.

(1618) Chevallier, A. ; et al., 1938. Absorption of vitamin A from the digestive tract. Compt. rend. soc. biol. 127: 1009-1011.

(1619) Chevallier, A. and S. Manuel. 1938. Sur l'excretion urinaire de la vitamine A. Compt. Rend. Soc. Biol. 129(26): 311-312.

(1620) Chevallier, A. , 1938. La physiologie de la Vitamine A. Ann. Physiol. et Physicochim. Biol. 14(3): 403-470.

(1621) Chevallier, A., and S. Manuel., 1939. Technique for determining vitamin A in milk. Compt. rend. soc. biol. 130: 553-555.

(1622) Chevallier, A.; et al., 1939. Sur la teneur du lait de femme en vitamine A. Compt. Rend. Soc. Biol. 131(16): 373-375.

(1623) Chevallier, A.; et al., 1939. Sur les teneurs comparees du sang et du lait en vitamine A. Compt. Rend. Soc. Biol. 131(16): 396-398.

(1624) Chevallier, A.; et al., 1940. Investigations on the vitamin A content of different milks for infant consumption in the Marseilles Region. Nourrisson.28: 45-67.

(1625) Chevallier, A., 1940. Vitamin A-in diet. Bull Soc. scient. d'hyg. aliment. 28:61-66.

(1626) Chevallier, A., and M. Sureau., 1940. Vitamin A-amount in blood of donors at transfusion center in Paris. Compt. rend. Soc. de biol. 134: 387-389.

(1627) C hevallier, A., and Simone Manuel., 1941. Vitamin A content of normal human blood. Trav. membres soc. chim. biol. 23: 1203-1208.

(1628) Chevallier, A.; et al., 1941. Sur le dosage de la vitamine A dans les huiles. Resultats compares des dosages par spectrophotometrie ultraviolette et par la reaction de Carr et Price. Trav. Membres Bull. Soc. Chim. Biol. 23: 1429-1437.

(1629) Chevallier, A. and S. Manuel., 1944. Fixation of vitamin A in the guinea-pig liver. Compt. rend. soc. biol. 138: 348-349.

(1630) Chevallier, A., and M. LaGoutiere. 1948. Repartition et fixation de la vitamine A suivant les modes d'administration. Jour. Physiol. 40(1, fasc. 2): 144-A - 145-A.

(1631) Chevallier, A.; et al., 1948. Influence of vitamin A on oxidation of lipides in vitro. Compt. rend. soc. biol. 142: 1010-1012.

(1632) Chevallier, A.; et al., 1948. Influence of certain liposoluble hormones and vitamins on the oxidation of lipides. Compt. rend. 226: 2098-2100.

(1633) Chevrel, M. L. and M. Cormier., 1948. Interdependence of A and E vitamin activity on genital system of male rabbits. Compt. rend. Acad. sc. 226: 2179-2180.

(1634) Chevrel, M. L. and M. Cormier., 1948. Vitamin A-effects of deficiency on genital system of male rabbit. Compt. rend. Acad. sc. 226: 1854-1855.

(1635) Chevrel, M. L.; et al., 1951. Inanition in the rabbit; influence of vitamins A and E. Compt. rend. soc. biol. 145: 1633-1636.

(1636) Chevrel, M. L.; et al., 1952. Histological changes in the adrenal cortex of the starved rabbit under the influence of small intakes of various lipides and vitamins A and E. Bull. soc. chim. biol. 34: 506-513.

(1637) Chevrel-Bodin, M. L., 1949. Etude histophysiologique des lesions de l'appareil genital du lapin consecutives aux carences en vitamins A, vitamines E et a l'inanition. Ann. Endocrinol. 10(1): 19-30.

(1638) Chiappe S, and Franco Chiappe.,1964. Avitaminosis in females during pregnancy and evolutive, morphological, and hydromineral tissual effects on the offspring. I. Deficiences in fat-soluble vitamins (A and D). Ann. Ital. Pediat. 17(3): 180-193.

(1639) Chiarolini, G., 1939. Vitamin A-content of olive oil in Sassari Province; experimental study. Riv. di clin. pediat. 37: 872-882.

(1640) Chiavarelli, S., 1947. Rapid method for determination of fat in tuna-fish liver. Ann. Chim. Appl. (Rome) 37: 274-276.

(1641) Chick, Harriette, and M. Honora Roscoe., 1926. The anti-rachitic value of fresh spinach. Biochem. Jour. 20(1): 137-152.

(1642) Chick, H.; et al., 1926. The difference in chemical composition of the skeletons of young rats fed (1) on diets deprived of fat-soluble vitamins and (2) on a low phosphorus rachitic diet, compared with those of normally nourished animals of the same age. Biochem. Jour. 20(3): 622-631.

(1643) Chick, H., and M. H. Roscoe., 1926. Influence of diet and sunlight upon the amount of vitamin A and vitamin D in the milk afforded by a cow. Biochem. Jour. 20(3): 632-649.

(1644) Chidester, F. E.; et al., 1928. The influence of minute doses of iodine and iron on growth of rats furnished vitamin A-free diet. Science 68(1766): 432.

(1645) Chidester, F. E., 1932. Vitamin A and the iodine-fat balance. Science 75: 286-287.

(1646) Chieffi, M., and E. Kirk. 1949. Vitamin studies in middle-aged and old individuals. II. Correlation between vitamin A plasma content and certain clinical and laboratory findings. Jour. Nutrition 37(1): 67-79.

(1647) Chikhalikar, P., and N. G. Magar. 1962. Dark adaptation test as related to the clinical symptoms of vitamin A deficiency and the serum level of carotene and vitamin A. Indian. Jour. Med. Res. 50(2): 253-258.

(1648) Chilcote, M. E.; et al., 1949. Stability of vitamin A acetate under laboratory conditions. Analyt. Chem. 21(8): 960-963.

(1649) Chilicote, M. E.; et al., 1949. Vitamin A in fish oils. Relative merits of four methods of assay. Analyt. Chem. 21(10): 1180-1188.

(1650 Chiota, G. und F. Tudini., 1962. Klinische Prufung der Wirkung von Vitamin A bei Hypogalaktie. Clinica Terap. 22: 737-740.

(1651) Chitre, R. G., and D. S. Khale., 1956. Nutritive value of vanaspati fortified with synthetic vitamin A palmitate. J. Sci. Ind. Research (India) 15C: 74-76.

(1652) Chitre, R. G., und D. S. Khale., 1956. Nahrwert von mit synthetischem Vitamin-A-Palmitat angereichertem Vanaspati. J. Sci. Ind. Res. (New Delhi), Sect. C. 15: 77-78.

(1653) Choi, H., 1959. Serum β-carotene and vitamin A contents of normal Koreans. Seoul Univ. Jour. 8: 302-312.

(1654) Cholewicki, A., 1969. A method of colorimetric vitamin A determination in fodders. Bull. Vet. Inst. Pulawy. 12(1-4): 35-42.

(1655) Cholewicki, A., 1970. New method of colorimetric determination of vitamin A in oil injection solutions. Acta. Po. Pharm. 27: 267-72.

(1656) Cholnoky, L., 1937. The pigments of Hungarian paprika and their vitamin A effects. Kiserletugyi Kozlemenyek 40: 173-186.

(1657) Chong, L. P., 1934. Vitamin A-rough evaluation in oils. Malayan, Med. J. 9: 205.

(1658) Chopra, J. G., and J. Kevany., 1970. Hypovitaminosis A in the Americas. Amer. J. Clin. Nutr. 23(2): 231-241.

(1659) Chou, Te-ch'in und A. L. Mariatt., 1953. Einige Faktoren in der chinesischen Kost, die Carotinausnutzung Beeinflussen. J. of Nutr. 51: 305-315.

(1660) Choudhury, R. R.; et al., 1971. Infertility in a bull-effect of Vitamin A therapy on the semen picture. Indian Vet. J. 48: 101-104.

(1661) Chow, C., 1946. Vitamin A content of Chinese animal foods. Chinese J. Nutrition 1: 20-24.

(1662) Chow, Jen-Tun.; et al., 1957. A comparative study of the methods of biological assay of vitamin A. Ying Yang Hsueh Pao. 2, No. 4: 264-275.

(1663) Chown, B., 1939. Vitamin A-giant-cell pneumonia of infancy as manifestation of deficiency. Am. J. Dis. Child. 57: 489-505.

(1664) Chranowa, A. und El. Shelew., 1960. Einflus der an Vitamin-A-reichen Nahrung auf die Erkrankung der Atmungsorgane bei Uberbeanspruchung der hoheren Nerventatigkeit bei Ratten. Bull. Inst. Physiol, Acad. Sci. Bulg. 4: 67-77.

(1665) Chranowa, A., 1960. EinfluB der an Vitamin A und Vitamin $D_2$ reichen Nahrung auf die bedingtreflektorische Tatigkeit bei Ratten. Bull Inst. Med. Exp. Acad. Sci. Bulg. 3: 155-167.

(1666) Christensen, K., 1958. Heat stability of vitamin A. Arch Pharm. Chemi 65: 748-757.

(1667) Christensen, K., 1958. Einige Untersuchungen uber das Verhalten von Vitamin A beim Erhitzen. Arch. Pharmac. og. Chem. 65: (115). 748-757.

(1668) Christensen, N. O.; et al., 1957. Untersuchungen uber die Resorption von Vitamin A. Arch. Pharmac. og Chem. 64: (114). 693-701.

(1669) Christensen, N. O.; et al., 1958. Absorption of vitamin A. II. Liver storage in rats and pigs. Arch. Pharm. Chemi. 65: 133-144.

(1670) Christensen, N. O.; et al., 1958. Absorption of vitamin A. III. Long-term experiments in rats using the growth and xerophthalmia method. Nord. Veterinarmed. 10: 393-406.

(1671) Christensen, N. O.; et al., 1958. Untersuchungen uber die Resorption von Vitamin A. Arch. Pharmac. og Chem. 65: (115). 562-574.

(1672) Christensen, N. O.; et al., 1962. Studies on the absorption of vitamin A. IV. The absorption and distribution of tritium labelled vitamin A in rats. Nordisk Veterinar Medicin. 14(4): 270-279.

(1673) Christensen, N. O.; et al., 1962. The absorption and distribution of tritum labelled vitamin A in rats. Arch. Pharmog. Chemi. 69(11): 395-402.

(1674) Christiansen, J., 1936. Vitamin-deficiency diseases in Denmark. Deut. Med. Wochschr. 62: 1262-1264.

(1675) Christie, D. G., 1949. Vitamin A deficiency in poultry reduces production and disease resistance. Agric. Gaz. N. S. Wales. 60(7): 362-366.

(1676) Christillin, L., 1955. Das pulverformige Vitamin A-Acetat und seine Verwendung in der pharmazeutischen Industrie. Farmaco (Pavia), Ediz. Sci. 10: 448-453.

(1677) Christophers, E., and O. Braun-Falco., 1970. Mechanisms of parakeratosis. Brit. J. Dermatol. 82(3): 268-275.

(1678) Chu, C. K. and I. P. Rhu., 1962. Histochemical studies on Clonor chis sinensis. Distriburion of vitamins A, B2 and C. Korean Choong Ang. Med. J. 21, No. 1: 105.

(1679) Chu, E. W., and Richard A. Malmgren. 1965. An inhibitory effect of vitamin A on the induction of tumors of forestomach and cervix in the Syrian hamster by carcinogenic polycyclic hydrocarbons. Cancer Res. 25 (6 Pt. 1): 884-895.

(1680) Chu, F. T. and A. Murphy., 1934. Vitamin A-early signs of deficiency in albino rats. J. Pediat. 5:68-74.

(1681) Chu, Fu-T'ang., and Ching-K'uel Lin., 1938. The efficacy of parenteral vitamin A administration in vitamin A deficiency. A clinical study of nine cases. Chinese Med. Jour. 53(5): 413-426.

(1682) Chu, W. P., 1959. Content of vitamin A in maternal milk during first week of lactation. Pediatria 37: 59-61.

(1683) Chu, Wu-Fan., 1962. Vitamin A content of the blood of the new-born. Vopr. Gematol. i Pediatrii, Leningrad, Sb. 33-4.

(1684) Chubaryan, F. A., 1965. The change in some indices of protein metabolism during experimental fascioliasis in sheep and domestic rabbits (Lepus cuniculus and the normalizing role of vitamin A. Izv. Akad. Nauk. Arm. SSR. Biol. Nauk. 18(2): 57-67.

(1685) Chudova, Z. I., 1961. The role of vitamins A and $B_1$ in the rearing of salmon fry. Tr. Nauchn. -Issled. Inst. Rybn. Khoz. Latviisk. SSR. 3: 421-429.

* (1686) Chung, A. C., and J. C. Houck., 1964. Connective tissue. IX. Effects of hypervitaminosis A on connective tissue chemistry. Proc. Soc. Exptl. Biol. Med. 115(3): 631-633.

(1687) Chupina, T. I., 1966. Seasonal vitamin A content in milk and blood of cows. Obmen. Veshchestv u Zhirotn-i Rast., Akad. Nauk. Kirg. SSR 132-135.

---

(1688) Church, D. C.; et al., 1954. Utilization of intravenously administered carotene by sheep and cattle. J. Animal Sci. 13: 677-683.

(1689) Church, D. C.; et al., 1956. Effect of plane of nutrition of beef cows on depletion of liver vitamin A during gestation and on the carotene requirements during lactation. Jour. Animal Sci. 15(4): 1078-1088.

(1690) Chuvaev, A. V., 1971. Role of the hypophysis in changed formation of corticosteroids during toxic doses of vitamins A and $D_2$. Vopr. Med. Khim. 17: 12-15.

(1691) Chwirot, E. et. al. 1970. Vitamin A and β-carotene in lamblasis. Wiad Parazyt. 16:337-341.

(1692) Cicchitto, A. M., 1937. Vitamin A-"bigio", semilunar ulceration of lower lip seen in Somaliland; pathogenesis, with special reference to avitaminoses; therapy. Policlinico (sez. prat.) 44: 823-833.

(1693) Cichecka, K.; et al.,1968. Plasma vitamin A, plasma beta-carotene and vitamin A load test in the diagnosis of intestinal malabsorption. Pol. Arch. Med. WEWN. 40(5): 551-59

(1694) Cienfuegos, G., 1946. Vitamin A-comparison of absorption after oral and intramuscular administration in normal children. J. Pediat. 28: 191-192.

(1695) Cima, L.; et al., 1964. Thin-layer separation of vitamins A and D in oily preparations and determination without saponification. Farmaco (Prat) 19: 428-439.

(1696) Cimino, S., 1944. Action of large doses of thiamine on the progress of avitaminosis A in young rats. Boll. Soc. Ital. Biol. Sperim. 19: 142-144.

(1697) Cintra, A., 1939. The vitamins of our food (in Brazil). Pub. Farm. (Sao Paulo) 5:19-22.

(1698) Cioslowski, T. and A. Szczygiel., 1932. Vitamin A role in therapy of puerperal infection; preliminary report. Ginekpolska 11: 101-108.

(1699) Citeaux, R.; et al., 1945. The vitamin content of milk. The influence of small doses of vitamin A on the composition of cow milk. Ann. Agron. 15: 529-554.

(1700) Clapham, P. A., 1933. Vitamin A- prophylactic action in helminthiasis. J. Helminthol. 11: 9-24.

(1701) Clare, J. L. und K. M. Soames. 1928. Der relative Gehalt an Fettloslichem Vitamin A und D in Serien von Lebertran. Lancet 214: 150-152.

(1702) Clark, D. E.; et al., 1967. Influence of coumaphos contaminatants, vitamin A, and phenothiazine-lead arsenate on certain enzymes and vitamins of cattle treated with coumaphos. Amer. J. Veterinary Res. 28(122): 89-95.

(1703) Clark, I. and R. W. Colburn., 1955. A relation between vitamin A metabolism and cortisone. Endocrinology 56: 232-238.

(1704) Clark, I. and C. A. L. Bassett., 1960. The antagonistic action of vitamin A on Vitamin D toxicity. Fed. Proc. 19(1 Pt. 1): 412.

(1705) Clark, I., 1961. Agents effecting the removal of skeletal $Ca^{45}$ and $P^{32}$ from intact and parathyroidectomized rats. Parathyroids Proc. Symposium, Houston, Texas 183-196.

(1706) Clark, I, and C. A. L. Bassett., 1962. The amelioration of hypervitaminosis D in rats with vitamin A. J. Exptl. Med. 115: 147-156.

* (1707) Clark, I. and M. R. Smith., 1964. Effects of hypervitaminosis A and D on skeletal metabolism. J. Biol. Chem. 239: (4), 1266-1271.

(1708) Clark, I., 1968. Mineral homeostasis and skeletal metabolism. Nucl. Sci. Abstr. 23(3): 4867.

* (1709) Clark, L.; et al., 1968. Skeletal abnormalities in the hindlimbs of young cats as a result of hypervitaminosis A. Nature (London) 217: 1174-1176.

* (1710) Clark, L., 1970. The effect of excess vitamin A on longbone growth in kittens. J. Comp. Pathol. 80:625-634.

(1711) Clark, L.; et al., 1970. Cryptococcosia in a cat. Aust. Vet. J. 46:544-548.

(1712) Clarke, P. M. and P. E. Todd., 1957. Some observations on the biological assay of vitamin A and its precursors by the vaginal-smear method. Brit. Jour. Nutrition. 11(2): 173-184.

(1713) Clarkson, A. K., 1943. Experiments with vitamin A. (i) Corneal injuries in relation to vitamin A. Indust. Welfare 25(288): 69-70.

(1714) Claussen, J., 1967. Treatment of metachromatic leucodystrophy (child; dietary vitamin A). Lancet 7520: 834.

(1715) Clausen, J., 1969. Effect of vitamin A deficiency on myelination in the central nervous system of the rat. Eur. J. Biochem. 7(4): 575-582.

(1716) Clausen, S. W., 1933. Vitamin A-limits of anti-infective value. Tr. Sect. Pediat. American Medical Association. 118-30.

(1717) Clausen, S. W., with technical assistance of A. B. McCoord., 1933. Limits of the anti-infective value of provitamin A (carotene). Jour. Amer. Med. Assoc. 101(18): 1384-1388.

(1718) Clausen, S. W., 1934. The effects of a moderate deficiency of vitamins. Bull. N. Y. Acad. Med. 10: 471-482.

(1719) Clausen, S. W., and A. B. McCoord., 1934. Vitamin A-distribution in tissues of rat and of guinea-pig. J. Biol. Chem. 105: 15-16.

(1720) Clausen, S. W., and A. B. McCoord., 1938. Vitamin A-carotinoids and vitamin A of blood. J. Pediat. 13: 635-650.

(1721) Clausen, S. W.; etal., 1940. Vitamin A-mobilization of vitamin from its stores in tissues by ethyl alcohol. Science 91:318-319.

(1722) Clausen, S. W.; etal., 1941. Effect of alcohol on vit. A content of blood in human subjects. Science 93 (2401): 21-22.

(1723) Clausen, S.W.;et al.,1942. The mobilization by alcohols of vitamin A from its stores in the tissues. Jour. Nutrition 24 (1): 1-14.

(1724) Clausen, S. W., 1942. The absorption of vitamin A and its storage in the tissues. Harvey Lectures, Ser. 38: 199-226.

(1725) Clausen, S. W., 1943. Vitamin A-deficiency. M. Clin., North America 27: 349-359.

(1726) Clausen, S. W., and A. B. McCoord., 1943. Concentrations of vitamin A, carotene, and xanthophyll in normal human blood. Sci. Month. 57(6): 567-568.

(1727) Clayton, C. C., and C. A. Baumann., 1944. Vitamin A storage and factors that affect the liver. Jour. Nutrition 27(2): 155-164.

(1728) Clayton,M. M., et al., 1953. Cooperative nutritional status studies in the northeast region. V. Blood findings. Maine Agr. Expt. Sta., Bull. No. 516: 1-59.

(1729) Cleg, D. J., 1965. Absence of teratogenic effect of butylated hydroxyanisole (BHA) and butylated hydroxytoluene (BHT) in rats and mice. Food Cosmet. Toxicol. 3(3): 387-403.

(1730) Cleland, J. B.; et al., 1969. Illnesses following the eating of seal liver in Australian waters. Med. J. Aust. 1: 760-763.

(1731) Clement, R., et al., 1939. Vitamin A-avitaminosis with severe xerophthalmia in infant after dietetic therapy of eczema. Bull. et. Mem. Soc. Med. d. Hop. de Paris 55: 858-864.

(1732) Clement, R., 1951. Hypervitaminose A. Presse Med. 59(75): 1570-1572.

(1733) Clement, R., 1967. Vitamin A-Avitaminosis in children. Presse Med. 75: 917-918.

(1734) Clere, A. M. Le.; et al., 1966. Behavior of fats during frying and controlled heating. Rev. Franc. Corps Gras 13(3): 175-183.

(1735) Clifcorn, L. E., 1944. The nutritive value of canned foods. 1. Introduction and sampling procedure. J. Nutrition 28: 101-105.

(1736) Clifford, S. H., and K. F. Weller., 1948. The absorption of vitamin A in prematurely born infants. Pediatrics 1(4): 505-511.

(1737) Cline, T. R.; et al., 1962. Effects of potassium nitrate, alpha-tocopherol, thyroid treatments and vitamin A on weight gain and live storage of vitamin A in lambs. In: 54th annual national meeting of the American Society of Animal Science, 1962. Jour. Animal Sci. 21(4): 991.

(1738) Cline, T. R.; et al., 1963. Effects of potassium nitrate, alpha-tocopherol, thyroid treatments, and vitamin A on weight gain and liver storage of vitamin A in fattening lambs. Jour. Animal Sci. 22(4): 911-913.

(1739) Clk, .; et al., 1970. Exostosesin hypervitaminotic A cats with optmal calcium-phosphorus intakes. J. Small Anim. Pract. 11:553-561.

(1740) Clow, B.; et al., 1930. Vitamin A-of commercially canned sauer-kraut. J. Agric. Research 41: 51-64.

(1741) Cluver, E. H., 1964. Sun-trauma prevention. S. African Med. J. 38(34): 801-803.

(1742) Cluver, E. H., and W. M. Politzer., 1965. Sunburn and vitamin A deficiency. S. African J. Sci. 61(8): 306-309.

(1743) Coates, M. E.; et al., 1950. Conversion of carotene to vitamin A in the intestine of the pig and of the rat; Transport of vitamin A by the lymph. Biochem. Jour. 46(5): 30-31.

(1744) Coates, M. E.; et al., 1952. Antibiotics in chick nutrition and vitamin A metabolism. Chemistry & Industry 149.

(1745) Coates, M. E., 1953. Mode of action of antibiotics in animal nutrition. Chemistry & Industry 1333-1335.

(1746) Coates, M. E.; et al., 1964. Composition of rabbit milk. Brit. J. Nutr. 18(4): 583-586.

(1747) Codvelle, F., 1938. Vitamin A - epidemic hemeralopia, avitaminosis of armies during compaign. Rev. Med. Franc. 19: 347-355.

(1748) Cody, C. C., 1932. Relation of vitamins A, D, B and G to otolaryngology. Arch. Otolaryngol 16(5): 661-675.

(1749) Coetzee, W. H. K., 1949. A histological method for the biological estimation of vitamin A. Biochem. Jour. 45(5): 628-637.

* (1750) Coggshall, R. E., J. G. Bieri. 1960. Pathology of the brain in single and mixed deficiences of vitamins A and E in the chick. J. Nutr. 70: 272-277.

(1751) Cohen, A. L., 1961. Chronic hypervitaminosis A. Arch. Argent. Pediat. 56:309-313.

(1752) **Cohen,** C. F., and Roy J. Barker., 1963. Vitamin A content and spectral response of house flies reared on diets with and without a vitamin A source. J. Cell. and Comp. Physiol. 62(1):43-47.

(1753) Cohen, H., 1958. Observations on carotenemia. Ann Internal Med. 48(2): 219-227.

(1754) Cohen, H., 1970. Mineral oil, Vitamin A, and carotene. Genesis and correction of a common misconception. J. Med. Soc. New Jersey. 67: 111-115.

(1755) Cohen, J.; et al., Vitamin A-effect of parathyroidectomy on evolution of hypervitaminosis A in rats; histologic and chemical observations. American Med. Asso. Arch. Path. 59: 723-726.

(1756) Cohlan, S. Q., 1953. Vitamin A-excessive intake as cause of congenital anomalies in rat. Science 117: 535-536.

*(1757) Cohlan, S. J., 1954. Congenital anomalies in the rat produced by the excessive intake of vitamin A during pregnancy. Pediatrics 13: 556-567.

*(1758) Cohlan, S. Q., and S. M. Stone., 1961. Effect of experimental endocrine procedures on the teratogenic action of hypervitaminosis A in the rat. Biol. Neonatorum 3: 330-342.

(1759) Cohlan, S. Q., 1966. Vitamin deficiencies and excesses(in children). In: Current Pediatric Therapy:W. B. Saunders Company: Philadelphia and London. 8-14.

(1760) Cohrs. P., 1955. Zur Histopathologie der durch A-Hypovitaminose verursachten Blindheit des Rindes. Dtsch. Tierarztl. Wschr. 62: 126-128.

(1761) Coles, B., 1970. Vitamin A deficiency and Elmeria acervullna infection in the chick. Poultry Science 49: 1295-1301.

(1762) Coles, C. L. J. und D. F. W. Thomas., 1952. Die Stabilitat von Vitamin-A-alkohol in wisserigem und oligem Medium. Pharmac. J. 169(4): 115:388. 29/11.

(1763) Collazo, J. A. and J. Sanchez Rodrigues., 1933. Vitamin A-symptomatology of hypervitaminosis caused by administration of large doses of pure vitamin to young rats. An. de Med. Int. 2: 291-301.

(1764) Collazo, J. A. and J. Sanchez Rodriguez., 1933. Vitamin A-exophthalmos and spontaneous fractures in hypervitaminosis. An. de Med. Int. 2: 647-661.

(1765) Collazo, J. A. and J. Sanchez Rodriguez., 1933. Hypervitaminosis A. II. Exopthalmus and spontaneous fractures. Klin. Wochschr. 12: 1768-1771.

*(1766) Collazo, J. A. and J. Sanchez Rodriguez., 1933. Vitamin A-symptomatology of hypervitaminosis produced in young rats by feeding them pure vitamin A. Klin Wchnschr. 12: 1732-1734.

(1767) Collazo, J. A.; et al., 1934. Das A-Vitamin und der Cholesterinstoffwechsel. Klin. Wochenschr. 13(47): 1678-1682.

(1768) Collazo, J. A.; et al., 1934. Vitamin A-hypervitaminosis; relation between vitamin and cholesterol metabolism. An. de Med. Int. 3: 523-532.

(1769) Collaza, J. A.; et al., 1934. Vitamin A-calcium and phosphorus content of bones and teeth in various experimental conditions, particularly in hypervitaminosis. An. de Med. Int. 3: 825-834.

(1770) Collazo, J. A., et al., 1934. Vitamin A-hypervitaminosis, Rev. Soc. Argent. de Biol. 10: 225-232.

(1771) Collins, F. D., 1952. The distribution of vitamin A in the rat-liver cytoplasm. Biochem. Jour. 51(4): 38.

(1772) Collins, F. D.; et al., 1953. Vitamin A. XXIII. Vitamin A and its occurrence in Ambystoma tigrinum. Biochem. J. 53: 626-629.

(1773) Collins, F. D.; et al., 1954. Rhodopsin. VII. Regeneration of rhodopsin by comminuted ox retina. Biochem. J. 56: 493-498.

(1774) Collins, F. D., 1954. Die Chemie des Sehens. Biol. Rev. Cambridge philos. Soc. 29: 453-477.

(1775) Colomb, D., 1959. Pityriasis rubra pilaris with post-anginal acute onset, greatly improved by treatment with synthetic vitamin A. Bull. Soc. Franc. Derm. Syph. 3: 405.

(1776) Colomb, D.; et al., 1961. Cutaneous atrophy of the uncovered regions with dyskeratoses and multiple epitheliomatoses. Pathogenic discussion. Arsenism, Hypovitaminosis A. Lyon Med. 93: 189-191.

(1777) Colomb. D.; et al., 1961. Cutaneous atrophy of the uncovered areas with dyskeratoses and multiple epitheliomatosis. Bull. Soc. Franc. Derm. Syph. 68: 257-258.

(1778) Colomb. D. H., 1961. Hyperkeratotic and spinous dermatosis of an atypical pityriasis rubra pilaris type in relation to an A avitaminosis developing simultaneously with a Nephritis-nephrosis syndrome. J. Med. Lyon 42:2045-2046.

(1779) Colomb, D.; et al., 1969. Trichorrhexis nodosa in hypothrepsic child with hypovitaminosis A. Bull. Soc. Franc. Derm. Syph. 76: 887-888.

(1780) Colomb. D.; et al., 1970. Vitamin A-Trichorrhexis nodosa in a hypothrepsic child with hypovitaminosis A. Lyon Med. 223: 337-338.

(1781) Collison, D. L.; et al., 1929. The nature of the vitamin A constituent of green leaves. Biochem. Jour. 23(4): 634-647.

(1782) Colmenares, T. S., 1951. Chemical and nutritional analysis of Scartichthys gigas (borracho). Anales Fac. Farm. y Bioquim. 2: 271-275.

(1783) Comar, M. M. 1958. Gewinnung von Vitamin A enthaltendem Leberol durch Versetzen des Leberbreies mit Alkalicarbonat, -bicarbonat oder wss. (F. P. 1 226 440 vom 20/10.

*(1784) Combescot, C.; et al., 1967. Effect of semisynthetic diets enriched in vitamin A on the vaginal cycle of the rat. Soc. Biol. 161(1): 151-154.

(1785) Combescot, C.; et al., 1967. Modifications in the estrogen sensitivity of the vaginal receptor in castrated rats on an alimentary diet. C. R. Soc. Biol. 161(1).

(1786) Combescot, C.; et al., 1968. Role of vitamin A and lipid concentration in the keratinization of the vaginal epithelium in the rat under the influence of estrogens. Arch. Sci. Physiol. 22(2): 257-264.

(1787) Combescot, Cl; et al., 1968. Estrogen-progesterone antagonism in the castrated rat. Effect of diets high in vitamin A. C. R. Soc. Biol. 162(5-6): 1190-1192.

(1788) Comby, J., 1924. Vitamin A-blindness and other diseases arising from lack of fat-soluble vitamin A. Arch. de Med. d. Enf. 27: 487-492.

(1789) Comel, M., 1935. The epiphylactic and antiinfectious action of vitamin A in syphilis. L'ospedale maggiore 549: Rev. sud-Americana Endocrinol., Immunol. Quimioterap. 20: 164.

(1790) Common, R. H.; et al., 1950. Biochemical effects of thiouracil on the response of the immature pullet to estrogen. Can. J. Research 28D: 272-279.

(1791) Conception, I. and R. L. Dee., 1951. Vitamin A-serum carotene and vitamin A level of Filipino women during pregnancy and after delivery. J. Philippine, M. A. 27: 495-500.

(1792) Concha, E.; et al., 1950. Vitamin A-carotene and vitamin A of plasma in thyroid diseases; preliminary report. Rev. Med. Chile 78: 791-796.

(1793) Condon, W. B., 1942. Vitamin A-regeneration of trachea and bronchial epithelium (in deficient animals). J. Thoracic Surg. 11: 333-346.

(1794) Coniglio, J. G.; et al., 1953. Effect of x-irradiation on fat balance and on lipide and vitamin A content of the liver. Am. J. Physiol. 172: 86-92.

(1795) Conne, P.; et al., 1969. Hypervitaminosis A-its effect on the incisor of the white rat. Helv. Odont. Acta. 13: 100-107.

(1796) Conne, P.H.W., and W. F. Koerner., 1969. Effects of an increasingly prolonged hypovitaminosis and avitaminosis A on the rat incisor. II. Histological data. Schweiz. Monatsschr. Zahnheilk. 79(5): 667-684.

(1797) Conne, P.H. and L. J. Baume., 1969. Effects of vitamin A deficiency on the calcification of enamel and dentine in the upper incisor of the white rat: A comparative histological and microradiographic study. J. Can Dent. Assn. 35(11): 588-598.

(1798) Conne, P.; et al., 1970. The influence of Vitamin A on condylar, epiphyseal and articular cartilages in the rat. Int. Z. Vitaminforsch 40:465-470.

(1799) Conochie, J. and R. A. Wilkinson., 1958. Stability of vitamin A and carotene in fortified sweetened condensed milk. Australian J. Dairy Technol. 13:27-28.

(1800) Conochie, J. and R. A. Wilkinson., 1958. Stability of vitamin A in reconstituted fortified nonfat milk solids. II. Effect of light. Australian J. Dairy Technol. 13: 74-78.

(1801) Conte, E. Del, and Maria Stux., 1954. Lack of influence of vitamin A on the concentration of thyrotropin in the blood of the rat. Medicina (Buenos Aires). 14: 330-333.

(1802) Contreras, C.; et al., 1962. Comparative study of the protein, riboflavine, carotene, and vitamin A contents of the maternal milk of two groups of women from low and high socioeconomic levels. Arch. Venezolanos Nutr. 12: 69-91.

(1803) Converse, H. T.; et al., 1934. The relation between the color and vitamin A of butter and the feed of the cow. Am. Soc. Animal Production, Rec. Proc. 27th Ann. Meeting 50-54.

(1804) Cook, D. H., and J. Axtmayer., 1932. A new plant source of Vitamin A activity. Science 75: 85-86.

(1805) Cook, D. H. and J. H. Axtmayer., 1933. Nutrition studies of foodstuffs used in the Puerto Rican dietary. VI. Vitamin A content of pasteurized milk and native cheese. Puerto Rico. J. Pub. Health Trop. Med. 9: 90-92.

(1806) Cook, D. H. and J. H. Axtmayer, 1934. Vitamin A-nutritional studies of foodstuffs used in Puerto Rican dietary; extract of annatto seed, Bixa orellana; its preparation and physiological properties. Am. J. Trop. Med. 14: 61-75.

(1807) Cooley, M. L.; et al., 1949. Vitamin A in mixed foods. Anal. Chem. 21: 593-595.

(1808) Cooley, M. L., 1953. Report on vitamin A in mixed feeds. J. Assoc. Offic. Agr. Chemists 36: 812-819.

(1809) Cooley, M. L., 1954. Analysis of vitamin A in mixed feeds. J. Assoc. Offic. Agr. Chemists 37: 742-748.

(1810) Cooper, D.; et al., 1950. The effect of feeding thyroprotein and thiouracil on the vitamin A requirement of the chick. Endocrinology 46:(4): 404-406.

(1811) Cooper, E., 1924. Vitamin A-distribution of vitamine A in urine and some digestive secretions. Am. J. Physiol. 67: 454-463.

(1812) Cooper, H. P., 1948. Sixtieth annual report. S. Carolina Agr. Expt. Sta., Ann. Rept. 60:7-175.

(1813) Coplan, H. M., and M. M. Sampson., 1935. The effects of a deficiency of iodine and vitamin A on the thyroid gland of the albino rat. Jour. Nutrition 9(4): 469-487.

(1814) Copp, D. H. and D. M. Greenberg., 1945. Studies on bone fracture healing. I. Effect of vitamins A and D. J. Nutrition 29: 261-267.

(1815) Corbet, R. E.; et al., 1933. Substances which interfere with the antimony trichloride test for vitamin A. Jour. Biol. Chem. 100(3): 657-666.

(1816) Corbett J. H.; et al., 1944. South African fish products. IX. The Cape John Dory, (Zeus Capensis, C. and V.) Jour. Soc. Chem. Indust. (London)63(12): 371-372.

(1817) Corbett, J. H.; et al., 1945. Vitamin A. - South African fish products. X. Some sparid fishes of the Cape. J. Soc. Chem. Ind. 64: 5-7.

(1818) Corcoran, A. C. and I. H. Page., 1945. Vitamin A-renal function and vitamin A. Proc. Am. Federation Clin. Research 2: 71-72.

(1819) Corcos, V. und R. Besnalnou., 1955. Augenkomplikationen der A-Avitaminose in Tunis. Tunisie Med. 43: 591-601.

(1820) Corcos, V., 1951. Ein Fall von Xerophthalmie bei einer multiplen Avitaminose. Arch. Franc. Pediatric 8: 550-551.

(1821) Cordelli, F.; et al., 1966. Effects of the high dosage of vitamins A, D, B6 and pantothenic acid on the osseous dynamics of Sr85 in rats during growth. Riv. Clin. Pediat. 77: 271-278.

(1822) Cordes, F. C. and D. O. Harrington., 1939. Vitamin A-asthenopia due to deficiency. Am. J. Ophth. 22: 1343-1354.

(1823) Cording, J. Jr.; et al., 1961. Vitamin stability in fortified potato flakes. Food Technol. 15: 279-282.

(1824) Cordier, 1948. The role of vitamins in the physiology of vision. Ann. Oculist. 181: 733-734.

(1825) Cormier, M. and J. Lesage., 1959. Substance in liver fat inhibits dehydration of vitamin A., Compt. Rend. 248: 318-321.

(1826) Cornbleet, Theodore and Hans Popper. 1942. Properties of human skin revealed by fluorescence microscopy: the normal skin: The vitamin A content of the skin. Arch. Derm. and Syph. 46 (1): 59-65.

(1827) Cornbleet, T.; et al., 1944. Vitamin A-blood vitamin and cutaneous diseases. Arch. Dermat. & Syph. 49:103-106.

(1828) Cornbleet, T., 1954. Liver vitamin A in Darier's and Devergie's disease. Jour. Invest. Dermatol. 23(2): 71-73.

(1829) Cornbleet, T., and R. Greenberg., 1957. Conversion of carotene to vitamin A by sebaceous glands. Interference in pityriasis rubra pilaris, ichthyosis, and psoriasis as shown by fluorescent microscopy. American Medical Asso. Arch. Dermatol 76: 431-433.

* (1830) Cornfeld, D., and R. E. Cooke., 1952. Vitamin A deficiency: case report. Unusual manifestations in a 5 1/2 month old baby. Pediatrics 10(1): 33-39.

(1831) Cornil, L. et. al. 1939. Vitamin A- Histologic study of viscera in experimental hypervitaminosis in guinea-pig. Ann. d'anat. Path. 16:74-83.

(1832) Cornil, L.; et al., 1939. Vitamin A-modifications of pituitary body in hypervitaminosis and hypovitaminosis. Ann. d' Anat. Path. 16: 83-86.

(1833) Corlette, M. B.; et al., 1938. Vitamin A-photometric studies of visual adaptation in relation to mild deficiency in adults. Am. J. M. Sc. 195: 54 -65.

(1834) Corral, F. V., 1948. The evaluation of fish oils rich in vitamin A. Inform. Quim. Anal. (Madrid) 2: 42-47.

(1835) Correa, O. G., 1946. Uruguayan fish-liver oils. Anales Asoc. Quim. y Farm. Uruguay 48: 93-95.

(1836) Correia, J. P.; et al., 1963. Use of labeled triolein and oleic acid in the study of intestinal absorption. Correlation with chemical fecal fat determinations and vitamin A tolerance. Am. J. Digest. Diseases 8: 649-65.

(1837) Corrie, F. E., 1939. Der Vitaminfaktor bei der tierischen Gesundheit. Chemist Pharmac. Fine Chem. Trade J. 10: 47-50.

(1838) Cortelezzi, M., 1946. Dog-fish (Galeus canis)-liver oil. Rev. Facultad Cienc. Quim. 21: 19-28.

(1839) Cortes, A.; et al., 1964. Vitamin A-Progressive erythrokeratoderma. Successful treatment with vitamin A. Hautarzi 15: 521.

(1840) Corwin, L. M., 1965. Further studies on the regulation of succinate oxidation by vitamin E. J. Biol. Chem. 240(1): 34-38.

(1841) Cosin, J., 1941. Vitamin A-dark adaptation and blood vitamin in normal individuals and in patients having pellagra with hyperkeratosis. Medicina, Madrid. 9: 420-452.

(1842) Costa, A., and J. Da Gama., 1953. Vitamin A-bone alterations due to deficiency in infants and children. Hospital, Rio de Janeiro. 44: 633-660.

(1843) Costa, D., 1945. Vitamin A-presence in assal (Euterpe oleracea). Rev. Brasil. Med. 2: 100-105.

(1844) Costa, N. P.; et al., 1941. Changes in the vaginal epithelium of the rat on a diet excessively rich in vitamin A. Rev. Soc. Argentina Biol. 17: 522-524.

(1845) Costa, S. F. Gomes da, and J. A. Felipe da Silva., 1962. Sangre 7: 367-385.

(1846) Costa, S. F. Gomes da.; et al., 1962. Comparative study of some metabolic actions of the anabolic steroids and of vitamin A. Arquiv. Port. Bioquim. 5: 432-452.

(1847) Costa, S. F. Gomes da.; et al., 1963. Anabolites and vitamin A. Arzncimittel-Forsch. 13: 161-165.

(1848) Couceiro, A.; et al., 1947. Penetracao do radioiodo em tireoids de ratos tratados pela vitamina A e pelo hormonio tireotropico. (Pennetration of radioiodine in thyroids of rats treated with vitamin A and with thyrotrophic hormone. An. Acad. Brasil Cienc. 19(4): 343-347.

* (1849) Cousins, R. J.; et al., 1969. Biochemical constituants of the dura mater in vitamin A deficiency. J. Nutr. 97(3): 409-418.

(1850) Covacev, L., and G. Salomone., 1966. The levels of vitamin A and beta-carotene in plasma from tuberculous subjects who had undergone gastric resection. Ann. Ist. Carlo Fortanini. 26(3): 349-363.

(1851) Covell, W. P., 1940. Pathologic changes in the peripheral auditory mechanism due to avitaminoses A, B complex, C, D and E. Laryngoscope 50: 632-647.

(1852) Covello, M., and Oreste Schettino., 1965. Detection and evaluation of vitamins in foods. Evaluation of vitamins A and $D_2$ in the same sample. Rend. Accad. Sci. Fis. Mat. 32: 208-218.

(1853) Coward, K. H. and J. C. Drummond., 1922. Significance of vitamin A in the nutrition of fish. Biochem. J. 16: 631-636.

(1854) Coward, K. H.; et al., 1923. The storage of vitamin A in the liver of the rat. Lancet 1: 124-125.

(1855) Coward, K. H. und A. J. Clark., 1923. Der Vitamingehalt einiger Handelspraparate. Brit. Medical Journal 1: 13-15.

(1856) Coward, K. H. and K. M. Key., 1928. The assay of vitamin A. Biochem. Jour. 22(4): 1019-1025.

(1857) Coward, K. H., and P. Eggleton., 1928. The content of vitamins A and C in watercress. Lancet 1 (5446): 97-98.

(1858) Coward, K. H., 1929. Der Einflu-beta von Mangel an Vitamin A auf den Brunstzyklus der Ratte. Journ. Physiol. 67: 26-32.

(1859) Coward, K. H., 1929. Vitamin-A-influence of deficiency on oestrous cycle of rat. J. Physiol. 67: 26-32.

(1860) Coward, K. H.; et al., 1930. The influence of vitamin A deficiency on the oestrous cycle of the rat. II. Jour. Physiol. (London) 69(3): 349-352.

(1861) Coward, K. H.; et al., 1930. The determination of vitamin A. Biochem. Jour. 24(6): 1952-1966.

(1862) Coward, K. H.; et al., 1931. The determination of vitamin A in cod-liver oils (a) biologically, (b) chemically, (c) physically, with a statistical examination of the results. Biochem. Jour. 25(4): 1102-1120.

(1863) Coward, K. H.; et al., 1931. Caseinogen for vitamin tests. Biochem. Jour. 25(2): 551-560.

(1864) Coward, K. H., 1932. The relative vitamin A and D contents of different samples of cod-liver oil. Pharm. J. 129: 4.

(1865) Coward, K. H.; et al., 1932. The relative vitamin A and vitamin D contents of samples of cod-liver oil. Analyst 57: 368-372.

(1866) Coward, K. H., 1932. Variation in growth response of rats in vitamin A tests compared with the variation in rats growing normally. Biochem. J. 26: 691-703.

(1867) Coward, K. H.; et al., 1932. Determination of vitamin D by means of its growth-promoting property. Biochem. J. 26: 1585-1592.

(1868) Coward, K. H., 1933. Vitamin A-influence of length of test period on accuracy obtainable in vitamin test. Biochem. J. 27: 445-450.

(1869) Coward, K. H., 1934. Relation of the growth response to dosage of vitamin A. Confirmation of a curve relating response to dose of vitamin A given. Biochem. J. 28: 865-869.

(1870) Coward, K. H. and K. M. Key., 1934. Eine Vereinfachung von Vitaminbestimmungen. Die Wirkung der Verabreichung der Dosen fur Vitamin-A- Bestimmungen halbwochentlich and nur einmal wochentlich fur Vitamin-D-Bestimmungen, anstatt taglicher Dosen. Biochemical J. 28: 870-874.

(1871) Coward, K. H., 1934. Uber die Genauigkeit der biologischen Bestimmungen von Vitaminen. Analyst 59: 681-685.

(1872) Coward, K. H., 1936. The utilization by the rat of vitamin A and carotene administered in different media. Biochem. J. 30: 1878-1882.

(1873) Coward, K. H., and B. G. E. Morgan., 1935. Quantitative estimation of vitamins A and D in various food substances (cooked and fresh). Brit. Med. Jour. 2(3908): 1041-1043.

(1874) Coward, K. H.; et al., 1935. Vitamin A-determination by means of its influence on vaginal contents of rat. Biochem. J. 29: 2736-2741.

(1875) Coward, K. H., 1936. Vitamin A-accuracy of determination; starting-point of test period. Biochem. J. 30: 2009-2011.

*(1876) Coward, K. H., 1942. The relative needs of young male and female rats for vitamin A. Brit. Med. Jour. (4329): 435-436.

(1877) Coward, K. H., 1942. The relation between the increase in weight of rats during the dosing period of vitamin A and $B_1$ determinations and the standard deviation of that increase. Biochem. J. 36: 795-796.

*(1878) Coward, W.A.; et al., 1966. Effects of hormones on reproduction in rats fed a diet deficient in retinol (vitamin A alcohol) but containing methyl retinoate (vitamin A acid methyl ester). J. Reprod. Fertil. 12(2): 309-317.

(1879) Coward, W. A., and J. N. Thompson., 1967. Retinol and retinyl esters in rats fed small amounts of retinyl acetate. Biochem. J. 103(2): 35P.

(1880) Coward, W. Al; et al., 1969. Retinol requirements of rats for spermatogenesis and vision. Brit. J. Nutr. 23(3): 619-626.

(1881) Cowell, S. J., 1938. Ernahrung und Diatetik. Practitioner 141: 415-421.

(1882) Cowgill, G. R., 1945. Relative nutritive values of animal and vegetable fats. Physiol. Rev. 25: 664-686.

(1883) Cowlishaw, B. ;et al,1957.Intracellular distribution of vitamin E and vitamin A in chicken liver. Biochim. et Biophys. Acta 25: 644-645.

(1884) Cox, A., 1937. Vitamin A-changes in rat's stomach in avitaminosis. Beltr. z. Path. Anat. u. z. Allg. Path. 98: 362-374.

(1885) Cox, A. J. Jr., 1938. Vitamin A-stomach mucosai changes in avitaminosis (etiologic importance in production of ulcers. California and West. Med. 48: 444-446.

(1886) Cox, A. J., 1941. Vitamin A-site of storage in liver (Kupffer cells). Proc. Soc. Exper. Biol. and Med. 47: 333-335.

(1887) Cox, H. E., 1950. Beobachtungen bei der spektrographischen Bestimmung von Vitamin D. Analyst 75: 521-524.

(1888) Cox, D.H.;et al., 1957. Die Wirkung von Nordihydroguajaretsaure (NDGA) und anderen Faktoren auf die Stabilitat von Trockenmilch und Trinkmilch zugesetztem Vitamin A. J. Dairy Sci. 40: 564-570.

* (1889) Cox, R. P.; et al., 1957. Potentiating effects of DPPD, bile salts, and sulfasuxadine on hypervitaminosis A in the rat. Exptl. Med. Surg. 15: 328-334.

(1890) Coy, N. H.; et al., 1941. Spectrophotometric and biological assay of vitamin A in oils. Ind. and Eng. Chem. Analyt. Ed. 13(2): 74-76.

(1891) Craig, R. G.; et al., 1960. A new vitamin A color reaction. Anal. Biochem. 1(4/5): 433-436.

(1892) Crain, F. D.; et al., 1965. Stoffwechsel von beta-Carotin. Biol. Med. 119: 606-608.

(1893) Cramer, W.; et al., 1923. Vitamin A-on behaviour of platelets in vitamin A deficiciency and on technique of counting them. Brit. J. Exper. Path. 4: 37-44.

(1894) Cramer, W., 1923. Uber die Wirkungsweise der Vitamine. Lancet 204:1046-1050.

(1895) Crampton, E. W., and M. F. Mills., 1945. The effect of heating, the presence of antioxidants, and the level and melting point of the fat component on the nutritional value of diets as indicated in rat-feeding tests. Can. J. Research 23E: 131-137.

(1896) Cravioto, B., 1945. Composition of typical Mexican foods. Jour. Nutrition 29(5): 317-329.

(1897) Crawford, M. E. F.; et al., 1930. Fat-soluble vitamins of milk. Biochem. J. 24: 682-691.

(1898) Crawford, M. E. F., and E. O. V. Perry. 1933. Vitamin content of the mango fruit. Biochem. J. 27: 1290-1293.

(1899) Creac'h, P. V., 1957. Das Vitamin A der Fischleberole. Oleagineux 11: 223-230.

(1900) Creech, G. T., and H. R. Seibold. 1943. Histopathology of anasarcous lesions observed in natural cases of vitamin A deficiency in cattle. Amer. Jour. Vet. Res. 4(13): 353-359.

(1901) Creek, D. W.; et al., 1958. Hypervitaminosis A-toxic reaction. Amer. Jour. Gastroenterol. 29(2): 169-172.

(1902) Creek, R. D.; et al., 1960. Einflu-beta von technischem $MnSO_4$ auf die Vitaminstabilitat. Poultry Sci. 39: 109.

(1903) Crepax, P., 1951. The mechanism of the hypertrophy of the thyroid produced by methylthiouracil. Arch. Sci. Biol. (Italy) 35: 6-17.

(1904) Crimm, P. D., und D. M. Short., 1935. Der Vitamin-A-Gehalt der menschlichen leber. Amer. J. Med. Sci. 189: 571-573.

(1905) Crimm, P. D., and D. M. Short., 1935. Qualitative blood cell changes in the rat due to vitamin A. Amer. Jour. Physiol. 111(2): 397-405.

(1906) Crimm, P. D., and J. W. Strayer., 1936. Vitamin-A-phosphatase content of blood serum and tissues in rat following administration of vitamins D and A. J. Biol. Chem. 112: 511-515.

(1907) Crimm, P. D., and D. M. Short., 1937. Vitamin A deficiency in the dog. Am. J. Physiol. 118: 477-482.

(1908) Crimm, P. D., and D. M. Short., 1939. Vitamin A content of the human liver in tuberculosis. Ann. Internal Med. 13(I): 61-63.

(1909) Crisler, G., 1936. Avitaminosis-A and the salivary conditioned reflex induced by morphine. Amer. Jour. Physiol. 115(1): 215-218.

(1910) Crist, J. W., and M. Dye., 1929. The association of vitamin A with greenness in plant tissue. II. The vitamin A content of asparagus. Jour. Biol. Chem. 81(3): 525-532.

(1911) Crist, J. W., and M. Dye., 1930. Spectral light, chlorophyll and vitamin A. Proc. Amer. Soc. Hort. Sci. 27: 220.

(1912) Crocker, T. T., and L. L. Sanders., 1970. Influence of vitamin A and 3, 7-dimethyl-2, 6-octadienal (citral) on the effect of benzo (a) pyrene on hamster traches in organ culture. Cancer Res. 30(5): 1312-1318.

(1913) Cros, J., 1967. Survey on the consumption of lipids in 4 villages in Senegal. Bull. Soc. Med. Afr. Noire. Lanc. Fr. 12(2): 153-176.

(1914) Cross, M. C. A., 1945. The relationship between the weight of young vitamin A deficient rats and the increase in weight after beta-carotene administration. Biochem. J. 39: 113-115.

(1915) Crosse, V. M., 1952. The feeding of premature infants. Brit. Jour. Nutrition 6: 230.

(1916) Crowley, J. W. and N. N. Allen., 1953. The effect of ethyl alcohol on the plasma vitamin A level of calves and goats. J. Dairy Sci. 36: 156-160.

(1917) Cruess, W. V., 1938. Die Vitamine. Zusammenfassender Bericht: Histor., allg. Eigg., Vork. u. physiol. Bedentung der Vitamine C, $B_1$ $B_2$,$B_6$, A, D u. E. Fruit Prod. J. Amer. Vinegar Ind. 17: 261-263. 281: 294-296. 18:48-51.

* (1918) Cruess, R. L., and I. Clark, 1965. Alterations in the lipids of bone caused by hypefvitaminosis A and D. Biochem. J. 96(1): 262-265.

(1919) Cruickshank, E. M.; et al., 1927. The vitamin A and vitamin D content of cod liver meal. Poultry Sci. 7(1): 9-16.

(1920) Cruickshank, E. M. and T. Moore., 1937. Vitamin A-effect of administration of large amounts of vitamin on vitamin content of hen's egg. Biochem. J. 31: 179-187.

(1921) Cruickshank, E. M.; et al.,1945. Vitamins in spray-dried eggs. J. Soc. Chem. Ind. 64: 15-17.

(1922) Cruickshank, E. M., and E. Kodicek., 1953. Vitamin D balance and distribution in rats given a massive dose of ergocalciferol. I. Experimental results. II. Statistical analysis, by P. Armitage. Biochem. Jour. 54(2): 337-347.

(1923) Cruz, A. F., 1953. The effect of vitamins $B_1$ and A administered in excess on the gastric emptying time and the secretory capacity of the stomach (gastric digestive ability). Rev. Espan. Enfeimedad. Aparato Digest. y Nutricion 12: 115-138.

(1924) Cruz-Coke, E., y J. Mardones., 1943. Meccanismos de produccion de la hipertension nefrogena. (Mechanisms of production of nephrogenic hypertension.) Rev. Med. Chile 71(10):955-961.

(1925) Culhane, K., 1933. Vitamin A-influence of basal diet in determination. Biochem. J. 27: 69-82.

(1926) Cullison, A. E., and C. S. Ward., 1965. Coastal Bermudagrass hay as a source of vitamin A for beef cattle. J. Anim. Sci. 24(4): 969-972.

(1927) Cultrera, R., 1933. Uber den Vitamingehalt von Tomaten und Tomatenkonserven. Ind. Ital. Conserve Aliment. 8: 53-72.

(1928) Cunningham, G. N., 1967. The effect of nitrite and hydroxylamine on the performance and vitamin A and carotene metabolism of ruminants. Diss. Abstr. B. 27(11): 3731.

(1929) Cunningham, G. N., 1968. Influence of nitrite and hydroxylamine on performance and vitamin A and carotene metabolism of ruminants. J. Anim. Sci. 27(4): 1067-1072.

(1930) Cunningham, M. M., and E. C. Slater., 1939. The vitamin A and vitamin D content of some Australian fish liver oils. Australian Jour. Exp. Biol. and Med. Sci. 17(4): 457-464.

(1931) Cunningham, M. M., and C. Scott., 1944. Large-scale production of liver oils from some New Zealand fish. New Zealand J. Sci. Tech. 26B: 21-27.

(1932) Curcio, F., 1954. Vitamin A, carotenoid, tocopherol and cholesterol contents of blood serum of aged people. Giorn. Gerontol. 2: 258-261.

(1933) Curone, A., 1959. On the combination therapy of special clinical forms of threatened abortion with vitamins A and E. Ther. Umsch. 16: 237-241.

(1934) Curto, G., 1952. Results of physiological and zoological investigations of the method of Usuelli-Piani for the use of nonfat milk for the nutrition of calves. Arch. Tierernahr. 2: 270-279.

(1935) Curzio, A.; et al., 1967. Behavior of hepatic free methionine in rabbits maintained on vitamin A free diets. Boll. Soc. Ital. Biol. Sper. 43(10): 530-532.

(1936) Cuta, F., and J. Celikovsky., 1954. Spectrophotometric and colorimetric determination of vitamin A with perchloric acid. Chem. Listy 48:1346-1350.

(1937) Cuthbertson, W. F. J., 1950. Biochemistry. Hemopoietic factors. Ann. Repts. Progress Chem. 46: 229-244.

(1938) Cutillo, F., and P. Salvi., 1947. Vitamin A and serum cholinesterase. Boll. Soc. Ital. Biol. Sper. 23: 1143-1144.

(1939) Cutroneo, A.; et al., 1957. Influence of some lipids-soluble vitamins on the lysozyme activity of blood serum. Riv. pediat. Siciliana 12: 41-56.

(1940) Czarnecki, M.; et al., 1969. Physiopathological role of lysosomes. Pol. Arch. Med. Wewn. 42:(1): 21-28.

(1941) Czarnecki, R. F., 1961. Herstellung einer haltbaren wasrigen Vitamin-A-Emulsion. Arzneimittel. . P. 3089823 vom 5/9.

(1942) CZhu, Ui-Fen., 1959. Vitamin A in the milk of nursing mothers during the first week of lactation. Pediatriya 37 (9): 59-61.

(1943) Daga, S.; et al., 1969. Serum vitamin A levels in childhood xerophthalmia. Indian J. Med Res. 57(4): 755-757.

(1944) Dagadu, J. M., 1967. Distribution of carotene and vitamin A in liver, pancreas, and body fat of Ghanaians. Brit. J. Nutr. 21(2): 453-456.

(1945) Dainow, I., 1950. Vitamin A, a new antianemia medicament. Intern. Z. Vitaminforsch. 21: 438-442.

(1946) D'Andrea, L., and L. M. Manfredi. 1965. Electrophoretic studies on the behavior of proteins and lipoproteins in rat serum during experimental avitaminosis. Boll. Soc. Ital. Biol. Sper. 41(13): 700-702.

(1947) D'Andrea, L., and L. M. Manfredi., 1966. Total blood cholesterol levels in an experimental vitamin A deficiency in the white rat. Boll. Soc. Ital. Biol. Sper. 42(9): 492-494.

(1948) D'Andrea, L., 1966. The transport of blood serum lipids in the principal experimental avitaminoses. G. Arterioscler. 4(3): 231-238.

(1949) Dahl, E. O., 1940. Vitamin A-prevalence of deficiencies; preliminary report. Journal-Lancet 60: 36-37.

(1950) Dahl, E., 1957. Seasonal variations in the color and vitamin A activity of livestock fat. Z. Lebensm.-Untersuch. u. -Forsch. 105: 180-188.

(1951) Dahlberg, A. C., and J. K. Loosli., 1948. Jour. Amer. Dietetic Assoc. 24(1): 20-22.

(1952) Dahlberg, A. C., 1953. The National Research Council studies on milk regulations and milk quality. Proc. Ann. Conv. Milk Ind. Foundation, Lab. Sect. 46: 44-52.

(1953) Dalderup, L. M., 1969. Vitamin A and acne vulgaris. Int. Z. Vitamin Forsch. 38(5): 451-453.

(1954) Dalldorf, G., 1938. Vitamin A-pathologic responses to deficiencies. Bull. New York Acad. Med. 14: 635-640.

(1955) Dal Santo, F., 1957. Vitamin A in the liver of oxen with telangiectasia. Nuova vet. 33: 85-86.

(1956) Dalvi, P. D. and R. A. Morton., 1951. Vitamin A XVI. Preparation of neovitamin A esters and neoretinene. Biochem. J. 50: 43-48.

(1957) Dam, Henrik., 1951. Fat-soluble vitamins. Ann. Rev. Biochem. 20: 265-304.

(1958) Dam, H.; et al., 1952. Effect of certain substances on vitamin A storage in the liver of the chick. Acta Pharmacol. et Toxicol. 8: 1-22.

(1959) Dam, H.; et al., 1952. Effect of certain substances on vitamin storage in the liver of the rat. Acta Pharmacol et Toxicol. 8: 23-29.

(1960) Damskaya, N. M., 1951. The role of vitamin deficiency in pathogenesis of eye ailments of tubercular etiology. I. Vitamin A deficiency in tuberculoallergic inflammation and metastatic ocular tuberculosis. Vestnik Oftamol. 30: (5):15-18.

(1961) Dane, B. S. and B. S. Anantanarayanan., 1958. Stability of sesamolin in presence of vitamin A acetate in hydrogenated oil (vanaspati). J. Sci. Ind. Research (India) 17C: 18.

(1962) Danes, B. S., and A. G. Bearn., 1966. Hurler's syndrome: Effect of retinol (vitamin A alcohol) on cellular mucopolysaccharides in cultured human skin fibroblasts. J. Exp. Med. 124(6): 1181-1198.

(1963) Danes, B. S., and A. G. Bearn., 1967. The effect of retinol (vitamin A alcohol) on urinary excretion of mucopolysaccharides in the Hurler syndrome. Lancet, I: 1029-1031.

(1964) Dangoumau, A., 1932. Recherche du facteur A dans l'extrait ethere des farines de froment. Compt. Rend. Soc. Biol. 111(38): 796-797.

(1965) Daniel, E. P., and H. E. Munsell. 1932. The vitamin A, B, C and G content of Concord grapes. J. Agr. Research 45: 445-448.

(1966) Daniel, M. R.;et al., 1966. The action of excess of vitamin A alcohol on the fine structure of rat dermal fibroblasts. J. Cell. Biol. 30(3): 465-475.

(1967) Daniel, W. A., Jr., 1942. Fibrocystic disease of the pancreas. Amer. Jour. Dis. Children 64(1): 33-42.

(1968) Daniels, A. L., 1926. Vitamin A content of fecal excretion of a breast fed and artificially fed infant. Preliminary report. Proc. Soc. Exp. Biol. and Med. 23(8): 824-826.

(1969) Daniels, A. L.; et al., 1923. Vitamin A-nasal sinusitis produced by diets deficient in fat soluble A vitamin. J. American Medical Asso. 81: 828-829.

(1970) Daniels, H.; et al., 1961. The chromatographic separation of vitamin A and vitamin D. Pharm. Weekbl. 96: 91-105.

(1971) Danielson, W. H.; et al., 1947. Vitamin A-absorption of different forms of vitamin A in cystic fibrosis of pancreas. Rocky Mountain, M. J. 44: 626.

(1972) Danielson, W. H.; et al., 1949. Intestinal absorption of vitamin A from oily and aqueous media in patients with the celiac syndrome. Pediatrics 3: 645-650.

(1973) Danilenko, I. A., and O. E. Privalo., 1967. Vitamin A nutrition in dairy cattle. Dokl. Vses. Akad. Sel' skokhoz. Nauk (2): 25-27.

(1974) Danish Patent #76 322., 1947. Chromatographische Behandlung von Fiussigkeiten mit einem festen Adsorbens. 2 Zeichnungen. Vom 18/11.

(1975) Dann, W. J., and T. Moore., 1931. The effect of vitamin B deficiency upon the vitamin A reserves of the rat. Biochem. Jour. 25(3): 914-917.

(1976) Dann, W. J., 1932. Uber die Oxydation von Vitamin A in vitro. Der Einfluβ des Losungsmittels. Bio-chemical J. 26: 666-678.

(1977) Dann, W. J., 1932. Transmission of vitamin A from parents to young in mammals. Biochem. J. 26: 1072-1080.

(1978) Dann, W. J., 1933. Die relativen Geschwindigkeiten der photochemischen Reaktionen von Carotin and Vitamin A bei Bestrahlung mit 2650 A. Biochemical J. 27: 274-278.

(1979) Dann, W. J., 1933. The transmission of vitamin A from parents to young in mammals. II. The carotene and vitamin A content of cow's colostrum. Biochem. Jour. 27(6): 1998-2005.

(1980) Dann, W. J., 1934. The transmission of vitamin A from parents to young in mammals. III. - Effect of the fat content of diet during pregnancy on the transmission of vitamin A to the foetal rat. Biochem. Jour. 28(2): 634-637.

(1981) Dann, W. J. 1934. The transmission of vitamin A from parents to young in mammals. IV. Effect of the liver reserves of the mother on the transmission of vitamin A to the foetal and suckling rat. Biochem. Jour. 28(6): 2141-2146.

(1982) Dann, W. J. 1936. Vitamin A-transmission from parents to young in mammals: vitamin A and carotenoid contents of human colostrum and milk. Biochem. J. 30: 1644-1651.

(1983) Dann, W. J., and K. A. Evelyn. 1938. Vitamin A-determination with photo-electric colorimeter. Biochem. J. 32: 1008-1017.

(1984) Dann, W. J. 1947. Vitamin A- Physico-chemical methods for estimation. Biol. Symposia. 12: 13-37.

(1985) Dannenberg, H. D. 1969. Studies on vitamin A supply in swine. I. Importance of vitamin A supply and herd status in swine husbandry. The vitamin A content in porcine colostrum and milk. Arch. Exptl. Veterinaermed. 23: 1063-1078.

(1986) Dannenberg, H. D. 1970. Vitamin A requirements of swine. II. Vitamin A content of the liver in the stillborn and suckling piglets. Arch. Exptl. Veterinaermed. 24: 309-324.

(1987) Dannenberg, H. D. 1970. Vitamin A requirements of swine. III. Vitamin A content of the liver in different groups of piglets and its relationship to hemoglobin levels. Arch. Exptl. Veterinaermed. 24: 425-438.

(1988) Dannenberg, H. D. 1970. Vitamin A requirements of swine. IV. The vitamin A content of the liver of slaughtered swine and its relation to fattening. Arch. Exptl. Veterinaermed. 24: 439-449.

(1989) Dannenburg, W. N.; et al. 1963. Vitamin-A-Ester und -Alkohol der Rattenleber bei Trachtigkeit. Proc. Soc. Exptl. Biol. Med. 112: 605-608.

(1990) Dannenburg, W. N., and R. L. Burt. 1963. An inverse relationship between plasma vitamin A and liver vitamin A alcohol during pregnancy. In: 47th Annual meeting of the Federation of American Societies for Experimental Biology. Fed. Proc. 22(2Pt. 1): 592.

(1991) Dannenburg, W. N. ; et al. 1963. Vitamin A ester and alcohol of rat liver during pregnancy. Proc. Soc. Exptl. Biol. Med. 112: 605-608.

(1992) Dannenburg, W. N., and R. L. Burt. 1965. Levels of liver retinol and retinol ester in pregnant and pseudo-pregnant rats. J. Nutr. 87(1): 26-30.

(1993) Danowski, T. S.; et al., 1955. Effect of vitamin A supplements on serum PBI level, and disposal of exogenous thyroxine. Jour. Clin. Endocrinol. and Metab. 15(10): 1262-1269.

(1994) Dante, Costa e H. de Paula Fonseca., 1946. Sobre a suposta presenca da vitamina A no doce de cupuassu. Rev. Brasileira Med. 3(12): 959-961.

(1995) Darby, W. J.; et al., 1947. The influence of pteroylglutamic acid ( a member of the vitamin M group) on the absorption of vitamin A and carotene by patients with sprue. Jour. Nutrition 33(2): 243-250.

(1996) Darby, W. J.; et al., 1947. The influence of pteroylglutamic acid (a member of the vitamin M group) on gastrointestinal defects in sprue. Jour. Nutrition 34(6): 645-660.

(1997) Darby, W. J.; et al., 1956. A study of the dietary background and nutriture of the Navajo Indian. J. Nutrition 60(Suppl. 2): 1-85.

(1998) Darby, W. J.; et al., 1960. Bitot's spots and vitamin A deficiency. Publ. Health Repts. 75(8): 738-743.

(1999) Dardzhonov, T., 1962. Vitamin A and carotene in cow milk produced at Vrana farm. Kostinbrod, Bulgar. Akad. Nauk. 13: 83-87.

(2000) Das, B. R. S.; et al., 1949. Fish-liver oils. I. Seasonal variation in vitamin A content and some of the physical and chemical constants of some fish-liver oils. Proc. Indian Acad. Sci. 29B: 13-22.

(2001) Das, B. R. S.; et al., 1949. Fish-liver oils. II. Biological assay of vitamin A in some of the liver oils. Proc. Indian Acad. Sci. 30B: 299-306.

(2002) Dassow, J. A., and Maurice E. Stansby., 1949. Stabilization of vitamin A in halibut liver oil with nordihydroguaiaretic acid. (NDGA) J. Am. Oil Chemists' Soc. 26: 475-479.

(2003) Dassow, J. A., 1956. Utilization of sea lions in Alaska. Com. Fisheries Rev. 18 (1): 5-9.

(2004) Dastur, N. N., 1937. Stability of vitamin A in ghee. Proc. 11th World's Dairy Congr., Berlin 1: 495-496.

(2005) Datta, N. C., and B. N. Banerjee. 1934. Biological and colorimetric assay of vitamin A in some Indian fresh-water fish oils. Indian J. Med. Research 21: 535-544.

(2006) Datta, P. K. and K. Rajagopal., 1952. Metabolism of vitamin A. I. Vitamin A and urine. Indian J. Med. Research 40: 487-494.

(2007) Datta, S. P., und B. G. Overell., 1949. Chromatographie von Vitamin A und seinen Derivaten an mit Aluminumoxyd behandeltem Filtrierpapier. Biochemic. J. 44: 63.

(2008) Dattatreya Rao, S., 1945. Studies on the destruction of vitamin A in shark-liver oil. III. Relation between vitamin A destruction and peroxide number. Indian Jour. Med. Res. 33(1): 63-68.

(2009) Dattatreya Rao, S., 1945. Studies on the destruction of vitamin A in shark-liver oil. IV. Catalytic activity of metals. Indian Jourl Med. Res. 33(1): 69-76.

(2010) Davenport, E. Acevedo and M. Casanueva., 1939. Vitamin A- hepatic insufficiency in hypovitaminosis. Rev. Med. de Chile. 67: 729-734.

(2011) Davey, M. G.; et al., 1968. Effects of dimethyl sulfoxide and of vitamin A on human platelets. Thromb. Diath. Haemorrh. 19(1-2): 12-17.

(2012) David, J. S. K., and J. Ganguly., 1967. Mechanism of absorption of vitamin A and cholesterol. Indian J. Biochem. 4(1): 14-17.

(2013) Davidek, Jiri., and J. Blattna., 1962. Chromatography of fat-soluble vitamins on thin layers of alumina. J. Chromatog. 7: 204-210.

(2014) Davidov, R. and M. Ermakova., 1954. Vitamin A content of milk. Molochnaya Prom. 15 (6):32.

(2015) Davidov, R., and K. Poryadkova., 1955. Reprocessing of milk with varying vitamin A activity. Molochnaya Prom. 16: (7):39-40.

(2016) Davidov, R. B., 1957. The content and loss of vitamins in evaporated milk. Voprosy Pitaniya 16 (4):35-39.

(2017) Davidov, R. B.; et al., 1962. Changes in the vitamin content of sweetened condensed milk during storage. Molochnaya Prom. 23: (12):19-20.

(2018) Davidson, J. L., 1944. The true relation of vitamin A to respiratory infections. Vet. Med. 39: 342-343.

(2019) Davidson, J. R., 1937. An attempt to inhibit the development of tar-carcinoma in mice. Canadian Med. Assoc. Jour. 37(5):434-440.

(2020) Davidson, W. J., und Elbert A. Harvey., 1932. Vitamine in Tablettenform. A. P. 1 845 813 vom 1/9.

(2021) Davies, A. W., and T. Moore., 1934. Vitamin A and carotene. XI. - The distribution of vitamin A in the organs of the normal and hypervitaminotic rat. Biochem. Jour. 28(1):288-295.

(2022) Davies, A. W., and T. Moore., 1935. The elimination of vitamin A from the livers of rats previously given massive doses of vitamin A concentrate. Biochem. Jour. 29(1): 147-150.

(2023) Davies, A. W., and T. Moore. 1937. Vitamin A and carotene. XV The influence of the vitamin A reserve on the length of the depletion period in the young rat. Biochem. Jour. 31(1): 172-178.

(2024) Davies, W., and D. J. Field., 1937. Vitamin A-vitamin content of Australasian fish liver oils. Biochem. J. 31: 248-250.

(2025) Davies, W., 1939. Vitamin A and vitamin D contents of mutton bird oil. Australian J. Exper. Biol. and M. Sc. 17: 81-84.

(2026) Davies, A. W., and T. Moore., 1939. The vitamin A content of cheese. Biochem. J. 33: 1645-1647.

(2027) Davies, A. W., and T. Moore. 1939. Determination of Vitamin A and carotene in organs. Zeitschr. Vitaminforsch. 9(3): 254-255.

(2028) Davies, A. W., and T. Moore., 1941. Vitamin A-interaction of vitamins A and E. Nature. London. 147: 794-796.

(2029) Davies, A. W., and A. N. Worden. 1954. The liver vitamin A reserves of some British wild animals. Proc. Zool. Soc. 123: 739-746.

(2030) Davies, G. N., 1956. Dental conditions among the Polynesians of Pukapuka (Danger Island). II. The prevalence of peridontal disease. Jour. Dental Res. 35(5): 734-741.

(2031) Davies, R., and E. Beyers. 1944. Vitamin A-fortification of pasteurized cheese with fish liver oils. Nature, London. 154: 179.

(2032) Davies, Ronald E., and P. Donald Forbes., 1964. Effects of vitamin A on the skin of the rhino mouse. Fed. Proc. 23(2 Pt. 1): 105.

(2033) Davies, R. E., 1967. Effect of vitamin A on 7,12-dimethylbenz (a) anthracene-induced papillomas in rhino mouse skin. Cancer Res. 27(2 Pt. 1): 237-241.

(2034) Davis, C. L.; et al., 1956. The effect of lecithin, choline, and methionine on the vitamin A and carotene plasma levels and liver stores of young dairy calves. J. Dairy Sci. 39: 440-447.

(2035)) Davis, E. M., and J. Outhouse. 1921. Vitamin A- fat soluble "A", effect of ration low in fat soluble "A" on tissues of rats. Am. J. Dis. Child. 21: 307.

(2036) Davis, E. M., and H. A. Stillman. 1926. Fruit and vegetable juices used in infant feeding. A comparison of their growth promoting qualities. Amer. Jour. Dis. Children 32(4): 524-529.

(2037) Davis, H. P., and I. L. Hathaway. 1931. Vitamin A content of the milk of Holstein, Ayrshire, Jersey and Guernsey cows. Expt. Sta. Record 65: 262.

(2038) Davis, R. E., and L. L. Madsen. 1941. Carotene and vitamin A in cattle blood plasma with observations on reproductive performance at restricted levels of carotene intake. Jour. Nutrition 21(2): 135-146.

(2039) Davis, T. E., 1970. Vitamin A-bone resorption in hypovitaminosis A. Cornell Vet. 60: 90-119.

(2040) Davison, K. L.; et al., 1964. Nitrate Toxicity in dairy heifers. 1. Effects on reproduction, growth, lactation, and vitamin A Nutrition. J. Dairy Sci. 47(10): 1065-1073.

(2041) Davison, K. L., 1970. Growth, haemoglobin, body composition and vitamin A of sheep fed dieldrin. Journal of Animal Science. 31(3): 567-575.

(2042) Davydov., P. D., 1949. Use of vitamins A, C, and D in pregnancy. Voprosy Pediat. i Okhrany Materinstva i Delstva 17 (6):41.

(2043) Day, C. D. Marshall, and H. J. Sedwick., 1934. The fat-soluble vitamins and dental caries in children. Jour. Nutrition 8(3): 309-328.

(2044) Day, H. G., und H. J. Stein. 1938. Die Wirkung von Verschiedenheiten der Memgen von Calcium, Phosphor, Eisen und Vitamin D in der Nahrung auf die Hamatopoese. J. Nutrit. 16: 525-540.

(2045) De, N. K., 1935. Spectrographic examination of some Indian milks. Indian Jour. Med. Res. 22(3): 499-508.

(2046) De, N. K., 1935. Spectrographic study of the vitamin A content of some oils and fats. Indian Jour. Med. Res. 22(3): 509-516.

(2047) De, N. K., 1935. Vitamin A activity and ultraviolet light. A simple spectrophotometric method of assaying vitamin A and carotene. Indian J. Med. Research 23: 505-514.

(2048) De, N. K., 1936. Factors affecting the carotene content of certain vegetable foodstuffs. Indian J. Med. Research 24: 201-212.

(2049) De, N. K., 1937. The spectrophotometric method of assaying vitamin A and carotene with further data on the vitamin A activity of Indian foodstuffs. Indian J. Med. Research 24: 737-749.

(2050) De, N. K., 1937. Vitamin A-assimilation of vitamin A and carotene by rats from some common foods, with note on conversion factor I. U./E. proposed by International Vitamin Conference. Indian J. Med. Research 24: 751-766.

(2051) De, N. K., 1937. The possible use of red-palm oil in supplementing the vitamin A activity of common vegetable oils. Indian J. Med Research 25: 11-15.

(2052) De, N. K.; et al., 1938. The vitamin A activity of some fish oils and vegetable foods. I. II. Indian Jour. Med. Res. 26: (2): 435-440.

(2053) De, S. S., and V. Subrahmanyan., 1945. Processing of soybean for the production of milk. Current Sci. 14: 204-205.

(2054) De, N. K.; et al., 1946. Vitamin A and carotene content of ghee (clarified butter) and fortified margarine. Indian Jour. Med. Res. 34(1): 3-12.

(2055) De, N. K., and S. G. Kshirsagar., 1954. Effect of cooking on the vitamin A values of fortified vanaspati and some foodstuffs of animal origin. Indian Jour. Med. Res. 42(4): 569-576.

(2056) De, N. K., 1955. Fluorometric method for vitamin A assay. Indian J. Med. Research 43: 391-395.

(2057) De, N. K., und P. K. Dikshit., 1957. Die Bedentung des diatetischen Phosphors fur die Verwertung von Carotin. Indian J. Med. Res. 45: 71-75.

(2058) Deadrick, R. E., et al 1955. Vitamin A-effects of octachloronaphthalene on metabolism in rat. J. Nutrition 57: 287-295.

(2059) Dean, L. W., 1933. Vitamin A-discussion of certain fundamental things influencing infection of nasal sinuses, ears and lungs (including role of vitamin deficiency). Tr. Am. Acad. Ophth, 38: 225-237.

(2060) Dean, W. T., 1956. Nutritional status of women industrial workers in Virginia. Jour. Amer. Dietetic Assoc. 32(1): 24-28.

(2061) Dearden, D. V.; et al., 1945. The balance of certain milk nutrients in the making of Cheddar, Cheshire, and Stilton cheeses, and their fate during the ripening of the cheeses. J. Dairy Research 14: 100-115.

(2062) Debodard, M.; et al., 1951. Measurement of stability of vitamin A in high potency concentrates. J. Pharm. Pharmacol. 3: 631-638.

(2063) Debre, R., and A. Busson. 1933. Vitamin A contents of different milks and milk products. Compt. Rend. Soc. Biol. 114: 1297-1299.

(2064) Debre, R., and A. Busson. 1933. Vitamin A-relation to infection in man. Bull. et Mem. Soc. Med. d. Hop. de Paris. 49: 1431-1438.

(2065) Debre, R. and A. Busson. 1933. Distribution of vitamin A in the human organism. Compt. Rend. Soc. Biol. 114: 1162-1164.

(2066) Debre, R. and A. Busson., 1934. Vitamin A-necessity of vitamin A reserve in infants: addition of vitamin-rich foods to diet. Bull. Soc. de Pediat. de Paris. 32: 58-65.

(2067) Debre, R. and A. Busson., 1934. Vitamin A metabolism. Press Med. 42: 617-619.

(2068) Debre, R. and A. Busson., 1934. Vitamin A-in man; lack of anti-infectious action. Medecine 15: 718-722.

(2069) Debre, R. and Andre Busson., 1934. Vitamin A and some pathological conditions in man. Presse Med. 42: 785-787.

(2070) De Caro, L., and I. Speir. 1935. Vitamin A, B and C content of raw, boiled and pasteurized milk. Quaderni nutrizione 2: 171-188.

(2071) De Caro, L., and A. Locatelli, 1938. The content of raw and cooked sweet potatoes in vitamins A, $B_1$, $B_2$, and C. Quaderni nutriz. 5: 11-20.

(2072) Deco, M., 1939. Seasonal variations in the vitamin A and carotene contents of fresh milk. Compt. Rend. Soc. Biol. 130: 817-818.

(2073) Deco, M., 1939. Influence of boiling and reheating on the vitamin A and carotene contents of milk. Compt. Rend. Soc. Biol. 130: 819-821.

(2074) Deco, M., and P. Clemens., 1941. La taux'des carotenoides et de la vitamine A dans le sang des individus normaux en Belgique. Compt. Rend. Soc. Biol. 135: 434-436.

(2075) Deco, M., 1941. The amount of vitamin A and carotene in the blood during various diseases. Compt. Rend. Soc. Biol. 135: 437-438.

(2076) De Dulunto, F.; et al., 1964. Vitamine A, mitosis and keratinization in the human epidermis. Rev. Clin Exp. 95: 135-143.

(2077) De Dulunto, F.; et al., 1962. Effects of fat-soluble compounds on lysosomes in vitro. Biochem. Pharmacol. 9: 97-116.

(2078) Deederer, C., 1939. Vitamin A in terms of human units. Med. World 57: 112-113.

(2079) DeFelice, D., 1942. Effect of processing on carotenoid (pro-vitamin A) content of peaches. Food Research 7: 16-25.

(2080) De Gironcoli, U. 1926. Vitamin A-clinical observations showing presence of vitamin A in olive oil and its absence in oil of soya bean. Pediatria 34: 1333-13348.

(2081) Degos, R. et al., 1961. Diffuse ichyosis during Hodgkin's disease. Sever lack of vitamin A. Bull. Soc. Franc. Derm. Syph. 68: 12.

(2082) Dehority, B. A.; et al., 1960. Some biochemical constituents in serum, cerebrospinal fluid, and aqueous humor of vitamin A deficient Holstein calves. J. Dairy Sci. 43: 630-644.

(2083) Delaini, G., 1955. Effect of combined treatment with cortisone and vitamin A on the virulence and growth of Ehrlich's adenocarcinoma in mice. Ormonologia (Turin) 14: 35-45.

(2084) Del Bo, L. G., 1954. Carotene and vitamin A in women with toxemic pregnancy. Ann. Ostet. e Ginecol. 76: 740-756.

(2085) Del Conte, E., and M. Stux. 1954. Lack of action of vitamin A on the thyroid. Medicina (Buenos Aires) 14: 9-14.

(2086) Delf, E. M., 1924. Uber die Eigenschaften einiger sudafrikanischer Olarten in bezug auf ihren Gehalt on Vitamin A. Biochemical Journ. 18: 93-100.

(2087) Delgado, J. N.; et al., 1958. Bestimmung der relativen Stabilitat eines oralen, flussigen Vitaminpraparats. Drug Standards 26: 51-56.

(2088) Della, C. G., 1967. Vitamins and pregnancy. Acta Vitamin (Milan) 21:179-193.

(2089) Delons, P. L.; et al., 1964. Zwei spezielle symptomatische Indikationen fur Librium. Agressologie (Paris) 5: 63-70.

(2090) DeLuca, H. F.; et al., 1961. Effect of various vitamin deficiences on citric acid metabolism in the rat. J. Nutr. 75: 175-180.

(2091) DeLuca, H. F.; et al., 1963. Action of vitamin A on liver homogenate oxidation of tricarbozylic acid cycle intermediates. J. Nutr. 81(4): 383-386.

(2092) DeLuca, H. F., 1965. Variations in lipid intake and their influence on respiration and tricarboxylic acid cycle activity. Can. J. Biochem. 43(9): 1575-1587.

* (2093) DeLuca, H. F., 1969. Metabolism of vitamins D and A. J. Agr. Food Chem. 17(4): 778-784.

(2094) DeLuca, L.; et al., 1968. Effect of vitamin A on the mucopolysaccharides of lung tissue. Arch. Biochem. 123: 1-8.

(2095) DeLuca, L.; et al., 1970. Biosynthesis of a fucose-containing glycopeptide from rat small intestine in normal and vitamin A-deficient conditions. J. Biol. Chem. 245: 4551-4558.

(2096) DeLuca, L.; et al., 1970. Vitamin A and mucus secretion. A brief review of the effect of vitamin A on the biosynthesis of glycoproteins. Int. Z. Vitaminforsch 40: 284-290.

(2097) DeLuca, R.; et al., 1957. Einfluβ einiger Vitamine auf den Properdinspiegel im Kindesalter. Atti. Soc. Peloritana Sci. Fisiche Mat. Natur. 4: 111-113.

(2098) Deluchat, G. A., 1969. Vitamin A-Median facial fissuration. Arch. Anat. Histol Embryol. 52: 207-222.

(2099) De Man, T. J.; et al., 1958. Wirkung der Art der Verabreichung massiver Vitamin-A-Dosen auf die Leberspeicherung in Ratten. Tijdschr. Diergeneeskunde 83: 380-387.

(2100) Demarchi, M., 1969. Prevalence and etiology of goiter in Iraq. Amer. J. Clin. Nutr. 22(12):1660-1666.

(2101) Demarest, B., 1939. Determination of vitamin A by destructive irradiation. Z. Vitaminforsch. 9: 20-31.

(2102) De Meillon, B.; et al., The relationship between ectoparasite and host. III. The development of Cimex lectularius on vitamin A-deficient rabbits, with some observations on the effect of calcium. S. African J. Med. Sci. 13: 159-167.

(2103) Demoulin, P., 1953. Vitamin A-accidental influences may result from excess quantity of vitamins A and D in infant. Rev. Med. Liege. 8: 310-314.

(2104) Demovsky, R. and R. Greenberg. 1965. Growth effect and tissue distribution of vitamin A following intravenous injection of vitamin A-rich Chyle. Proc. Soc. Exp. Biol. Med. 118(1): 158-161.

(2105) Denkavit, N. V., 1954. Vitaminisierung von Nahrungs- und Futtermitteln. 9 weitere Beispiele. F. P. 1116400, vom 23/12.

(2106) Denton, C. A.; et al. 1944. The effect of spray-drying and the subsequent storage of the dried product on the vitamin A, D, and riboflavin content of eggs. Jour. Nutrition 28(6): 421-426.

(2107) Denz, F. A., and F. B. Shorland. 1934. The composition and vitamin A value of some New Zealand fish-liver oils. New Zealand J. Sci. Tech. 15: 327-331.

(2108) Deo, P. G., and H. D. Srivastava. 1963. Studies on the effect of different deficient diets on the natural resistance of chickens to Heterskis gallinae (Gmelin, 1790) Freeborn 1923. Indian J. Veterinary Sci. Anim. Husb. 33(4): 225-229.

(2109) Depisch, F., 1954. The fat metabolism and its relation to arteriosclerosis. Wien Z. inn. Med. 34: 89-104.

(2110) Depperu, E., 1946. Vitamins and platelet production: vitamin A and vitamin D. Boll. Soc. Ital. Biol. Sper. 22: 327-328.

(2111) De Ritter, E., 1961. Physicochemical and biological potency relations for isomerized vitamin A palmitate. J. Pharm. Sci. 50: 510-512.

(2112) Derman, H., 1942. Vitamin A and nyctalopia. Compt. Rend. Ann. et Arch. Soc. Turque Sci. Phys. Nat. 9: 109-114.

(2113) Derman, H., 1942. Vitamin A and night blindness. Compt. Rend. Ann Arch. Soc. Turque Sci. Phys. Nat. No. 8/9: 115-116.

(2114) Derman, H., 1942. The action of strong light and of vitamin A on the regeneration of visual purple. Arch. Intern, Pharmacodynamie 68: 230-238.

(2115) Dermant, A. and J. Mayer, 1952. Effect of bromobenzene cystine administration on vitaminA-deficient rats. Proc. Soc. Exptl. Biol. Med. 79: 711-713.

(2116) D'Ermo, F. and V. Regis. Retinal arterial pressure in hypertension after vitamin A administration. Boll. Oculist. 29: 406-419.

(2117) Dervishi, M. H., 1966. Considerations about the carotene content in the serum of the blood of some milk cows. Bul. Shkencave Bujquesore. No. 3: 73-79.

(2118) Desai, I. D., und A. L. Tappel. 1965. Erythroztenhamolyse durch isolierte Ratten-leberlysosomen. Proc. Soc. Exp. Biol. Med. 118 (2): 496-499.

(2119) De Simone, F. ; et al., 1955. Serum protein and some vitamins in subjects with neoplasias before and during x-ray treatment. Radiologia 11: 775-783.

(2120) Desmarais, A., und J. Y. McGraw. 1955. Einflu - von Vitamin A und D auf das Wachstum und auf die Capillarresistenz bei mit und ohne Ascorbinsduremangeldidt. behandelten Meerschweinchen. C. R. Seances Soc. Biol. Filiales 149: 1718-1722.

(2121) Destro, F., 1954. Vitamin A and hypophyseal gonadotropic function. Ann. Ostet. Eginecol. 76: 893-900.

(2122) Detwiler, T. C.; et al., 1966. Wirkung von Digitonin und Tocopherol auf NADH und Succinat-Cytoehrom e-Reduktase und Cytochrom e-Oxydase aus Rinderherzmuskel. J. Biol. Chemistry 241 1621-1631.

(2123) Deshmukh, D. S.; et al., 1964. Studies on metabolism of vitamin A. 5. Dietary protein content and metabolism of vitamin A. Biochem. J. 90(1): 98-104.

(2124) Deshmukh, D. S.; et al., 1964. Absorption of retinoic acid (vitamin A acid) in rats. Indian J. Biochem. 1(3): 164-166.

(2125) Deshmukh, D. S., and J. Ganguly. 1964. Effect of dietary protein contents on the intestinal conversion of beta-carotene to vitamin A in rats. Indian J. Chem 1 (4): 204-207.

(2126) Deshmukh, D. S.; et al. 1965. Metabolism of vitamin A. Absorption of retinal (vitamin A aldehyde) in rats. Biochem. J. 96: 377-382.

(2127) Deshmukh, D. S.; 1965. Rapid conversion of retinal (vitamin A aldehyde) to retinoic acid (vitamin A acid) in the living rats. Biochim. Biophys Acta. 107(1): 120-122.

(2140) Deutsch, M. J., et al. ; 1964. Assay of oil-soluble vitamins. II. Vitamin A and vitamin D assays from a common saponification and extraction. J. Asso. Offic. Agr. Chem. 47(4): 762-765.

(2141) Devadas, R. P., und T. S. Sutton. 1951. Die Wirkung von Ei dotterzulage zur sudindischen Reiskost auf das Wachstum von Ratten. Indian J. Med. Res. 39: 51-58.

(2142) Devadas, R. P., and T. S. Sutton. 1953. The effects of protein, fat, vitamin, and egg-yolk extract supplementations (singly and combined), to the poor rice diet of South India on the growth of rats. Jour. Med. S. Univ. Baroda 2(2): 1-20.

(2143) DeVaney, G. M.; et al., 1935. Vitamin A content of eggs produced by chickens fed viosterol and various percentages of cod-liver oil. Jour. Agric. Res. 50(10): 853-860.

(2144) Devaney, G. M. und L. K. Putney., 1935. Der Vitamin-A- und d-Gehalt von konserviertem Lachs. J. Home Econ. 27: 658-662.

(2145) Devyatnin, V. A., 1953. Addition of vitamins to food in the case of public nourishment. Voprosy Pitaniya 12 (6): 79-80.

(2146) Devyatnin, V. A.; 1954. Vitaminization of food products. Trudy, Vsesoyuz. Nauch.-Issledovatel. Vitamin Insti. 5: 182-191.

(2147) Devyatnin, V. A. 1955. Vitaminization of fats. Vsesoyuz. Nauch. Issledovatel. Vitamin Inst. Vitaminizatsiya Pishchevykh Produktov. 39-43.

(2148) Devyatnin, V. A.; et al., 1956. Stability of vitamin A. Tekhnol. i. Primenenie. vitamina A i Karutina Shornik 73-80.

(2149) DeWitt, S. G.; et al., 1966. Mechanismus der Biosynthese von Vitamin A aus beta-Carotin. J. Biol. Chemistry 241: 1929-1932.

(2150) Dewjatnin, W. A., 1953. Uber die Anreicherung der Kost mit Vitaminen im Rahmen der Gemeinschaftspeisung. Fragen d. Ernahr. 12 (6): 79-80.

(2151) Dezani, S., 1927. Vitamin A-in tunny fish oil. Biochim. e Terap. Sper. 14: 41-48.

(2128) Deshmukh, D. S., and J. S. Ganguly. 1965. Effect of dietary protein content on the intestinal conversion of beta-carotene to vitamin A in rats. Indian J. Biochem. 1(4): 204-207.

(2129) Deshmukh, D. S.; et al. 1967. Vitamin A-Demonstration of oxidation and reduction of retinal in rat intestine. Indian J. Biochem. 4: 18-21.

(2130) Deuel, H. J. Jr.; et al., 1941. Production of high-vitamin A milk by diet. J. Nutrition 22: 303-313.

(2131) Deuel, H. J. Jr.; et al., 1941. The effect of vitamin A intake on vitamin A content of butterfat. J. Biol. Chem. 139: 479-480.

(2132) Deuel, H. J. Jr.; et al. 1942. The effect of a high vitamin A intake on the blood and milk carotene of Holstein and Guernsey cows. Jour. Nutrition 23(6): 567-579.

(2133) Deuel, H. J., Jr.; et al. 1943. Studies on carotenoid metabolism. IV. The effect of vitamin A intake on the carotenoid and vitamin A content of the eggs, liver, blood and body fat of hens. Jour. Nutrition 26(6): 673-685.

(2134) Deuel, H. J. Jr.; et al. 1946. Vitamin-A-nutritive value of fish proteins; use of mackerel protein in bioassay test. J. Nutrition 31: 187-192.

(2135) Deuel, H. J., Jr. ; et al. 1946. Studies on the nutritive value of fish proteins. 1. Evaluation by the rat-growth method and by the Cannon method. J. Nutrition 31. 175-185.

(2136) Deuel, H. J., Jr.; et al. 1951. Vitamin A-augmentation of provitamin A potency of carotene when fed in margarine. J. Nutrition 43: 371-387.

(2137) Deuel, H. J. Jr., and S. M. Greenberg. 1953. A comparison of the retention of vitamin A in margarines and in butters based upon bioassays. Food Res. 18(5): 497-503.

(2138) Deuschle, F. M.; et al. 1959. Analysis of an anomalous oculodentofacial pattern in newborn rats produced by maternal hypervitaminosis A. Jour. Dental Res. 38(1): 149-155.

(2139) Deutsch, M. J.; et al. 1964. Assay of oil-soluble vitamins. 1. Vitamin A and carotene: Suggestions for improving assay. J. Asso. Offic. Agr. Chem. 47(4): 756-762.

(2152) Dhar, N. R., 1926. The metabolism in diabetes and the resemblance of the functions of internal secretions with those of vitamins. Chem. Zelle Gewebe 13: 119-133.

(2153) Dharmani, L. C.; et al., 1946. A study of vitamin A in buffalo's milk throughout a lactation. Indian Jour. Vet. Sci. and Animal Husbandry 16(3): 158-166.

(2154) Dhotel, Y., 1953. Potentiation of adrenocorticotropin (ACTH) given intravenously by association with vitamins. J. Sci. Med. Lille 71: 117-129.

(2155) Dhotel, Y., 1953. Vitamin A, diencephalic regulator. Acta Vitaminol, 7: 147-50.

(2156) Dhurandhar, C. B., and A. K. BomanBehram. 1940. Vitamin A-pigmentation of conjunctiva and its possible relation in nutrition. Indian J. Med.Research 27: 735-741.

(2157) Djaeni, A., and O. A. Roels. 1964. Lymphatic absorption of vitamin A in rats on a low protein diet. Fed. Proc. 23(2 Pt.1): 341.

(2158) Dluzewska, A.; et al., 1970. Vitaminization of concentrated milk with vitamin A. Roczniki Instytutu Przemyslu Mlezarskiego 11 (6): 53-69.

(2159) Dluzewska, A.; et al., 1970. Vitaminization of dried milk for infant feeding by addition of vitamin preparations before drying. Roczniki Instytutu Przemyslu Mleczarskiego 11 (6): 71-88.

(2160) Dmitrowsky, A. A., 1958. Zur Frage des Bedarfs an Vitamin A D. Ernahrungsforschung 3: 276-281.

(2161) Dmitrovskii A. A., 1961. Hematin catalysis in vitamin A and fat oxidation processes. Biokimmiia 26: 225-233.

(2162) Dmitrovskii, A. A., 1963. Utilization of vitamins A and D in aqueous emulsion for animal nutrition. Biokhim., Sb. No. 6: 160-167.

(2163) Dmitrovskii, A. A., and N. A. Starikova. 1965. Conversion of beta-carotene into vitamin A by a culture of Pseudomonas aeruginosa. Dokl. Akad. Nauk. SSSR. 163(2): 495-496.

(2164) Dmitrovskii, A. A., and G. V. Eremina. 1967. Separate determination of vitamin A-aldehyde and vitamin A-acid. Biokhimiya 32(6): 1209-1219.

(2165) Dias, A. B., 1941. Vitamin A-hypovitaminosis and its repercussion on vision. Arq. Brasil de Oftal. 4: 15-26.

(2166) Diaz, A. T., 1968. Determination of carotene and vitamin A in milk, butter and margarine. Universidad de Chile 20: 172-175.

(2167) Diaz, C. J.; et al., 1947. Intervention of vitamins in protein metabolism. I. Thiamine in adult animals. Rev. Clin. Espan. 25: 249-254.

(2168) Diaz, C. J.; et al., 1948. Vitamin A-intervention of vitamins in protein metabolism; study in adult animals. Rev. Clin. Espan. 29: 224-233.

(2169) Diaz, H. E. and E. Falabella. 1943. Vitamin A sources in everyday diet. Rev. Asoc. Argentina Dietol. 1(1): 52-54.

(2170) Diaz, J. L. Sanches., 1946. Vitamin A-cutaneous manifestations (hyperkeratosis) of avitaminosis: 7 cases. Rev. Sif. Leprol y Dermat. 3: 61-63.

(2171) Di Bella, L., 1944. Importance of the thyroid in regard to the biological action of carotene and vitamin A. Arch. Sci. Biol. (Italy) 30: 1-8.

(2172) Di Celso, P. M., 1961. Mechanism of transformation of carotene to vitamin A in the animal organism. Aliment. Animale 5: 593-595.

(2173) Dickey, L. B. and E. J. Bradley., 1948. Vitamin A-hypervitaminosis A; case. Stanford Med. Bull 6:345-348.

(2174) Dicks, M. W.; et al., 1957. Hydrogenation versus chromatography in the estimation of tocopherol in calf plasma. J. Dairy Sci. 40: 590-591.

(2175) Dicks, M. W.; et al., 1957. Single versus duplicate determinations for the estimation of vitamin A and tocopherol in calf livers. J. Dairy Sci. 40: 1492-1494.

(2176) Dieckmann, Wm. J.; et al., 1944. Ca, P, Fe and N balances in pregnant women. Am. J. Obstet. Gynecol. 47: 357-368.

(2177) Diehl, J. F., 1960. Effect of hepatic coccidiosis infection in rabbits ontissue levels of vitamins A and E. J. Nutr. 71: 322-326.

(2178) Diemair, W.; et al., 1943. Study of the antioxidative effect of biological material on fat spoilage. Fette u. Seifen 50: 349-354.

(2179) Dienst, C., and H. van Bebber., 1942. The vitamin A and beta-carotene in the blood in old age, in hypertension and in apoplexy. Klin Wochschr. 21: 298-300.

(2180) Dienst, C.; et al., 1942. Control of the vitamin A economy. Klin. Wochschr. 21: 1054-1056.

(2181) Dietel, H., and Peter Siegert. Vitamin A and pregnancy. Klin. Wochschr. 21: 78-82.

(2182) Dietel, B. 1957.Vitamin A in blood serum and liver of rats during experimental vitamin A deficiency and a cure for it. Nahrung, 1: 267-277.

(2183) Dietl, B., 1957. Axerophthol in blood serum and liver of rats during vitamin A deficiency and treatment. Roczniki Panstwowego Zakladu Hig. 8: 253-264.

(2184) Dietl, B. and T. Opuszynska. 1961. Vitamin A-The effect of exercise on the reserves of retinal in the liver and kidneys of rats. Roczniki Panstwowego Zakladu Hig. 12:431-436.

(2185) Dietl, B. 1962. The effect of dietary protein quality on Vitamin A in the liver, kidneys, and blood plasma of the rat. Roczniki Panstwowego Zakradu Hig. 13:337-338.

(2186) Dietl, B. 1963. Einflu der Proteinqualitat in der Diat auf den Vitamin-A-Haushalt in Leber, Nieren und Blutserum der Ratten. Roczniki Panstwowego Zakladu Hig. 14: 117-128.

(2187) Dietl, B. 1963. Wirkungen der Nahrungsproteinqualitat auf den Vitamin-A-Stoffwechsel in einigen Rattengeweben. 2. Mitt. Wirkung einer Aminosaureerganzung von Weizengluten auf die Vitamin-A-Gehalte von Leber, Nieren und Blutserum der Ratte. Roczniki Panstwowego Zakladu Hig. 14: 259-266.

(2188) Dietl, B. and E. Litwin. 1964. Vitamin A and carotene content in diet and blood serum of normal infants artificially fed. II. Seasonal variations of Vitamin A, β carotene, and carotenoids in infant meals. Roczniki Panstwowego Zakladu Hig. 17(2): 141-148.

(2189) Di Giunta, E. ; et al. 1968. The treatment of vertigo with a pharmacological association (vitamin A, vitamin E, balsamics and cinnarizine). Clin Otorinolaring. 20: 212-221.

(2190) Dijkstra, B.K.S. 1963. Vitamin A - Origin of carcinoma of the bronchus. J. Natl. Cancer Inst. 31: 511-519.

(2191) Dikshit, P. K. and S. Ranganathan. 1955. Vitamin A-Carotene metabolism in mammals. I. Experiments with goats. Indian J. Med. Research. 43: 481-487.

(2192) Diller, 1938. Vitamin A-Sauerkraut und Sauerkrautkonserven. Best. des Vitamin-A-, -B-u, -C-Geh. im Sauerkraut. Vorratspflege u. Lebensmittelforsch. 1: 451-456.

(2193) Diller, 1939. New results in vitamin A investigation during the years 1937 and 1938. Deut. Apoth, Ztg. 54: 771-773, 784-786, 809-810.

(2194) Di Mattei, P. 1934. Vitamin A-Standards and units of vitamins at the 2nd International Conference at London, June, 1934. Biochim. Terap. Sper. 21: 467-476.

(2195) Dingle, J. T. and J. A. Lucy. 1961. Untersuchungen uber die Wirkung von Vitamin A. 2. Mitt. Die Freisetzung einer gebundenen Protease durch die Wirkung von Vitamin A. Biochem, J. 78: 11P.

*(2196) Dingle, J. T. ; et al. 1961. Studies on the mode of action of excess of vitamin A. 1. Effect of excess of vitamin A on the metabolism and composition of embryonic chick-limb cartilage grown in organ culture. Biochem. Jour. 79(3): 497-500.

*(2197) Dingle, J. T. 1961. Studies on the mode of action of excess of vitamin A. 3. Release of a bound protease by the action of vitamin A. Biochem. Jour. 79(3): 509-512.

*(2198) Dingle, J. T. and J. A. Lucy. 1962. Studies on the mode of action of excess of vitamin A. 5. The effect of vitamin A on the stability of the erythrocyte membrance Biochem. Jour. 84(3): 611-621.

(2199) Dingle, J. T. ; et al. 1962. Vitamin A and membrane systems. I. The action of the vitamin on the membranes of cells and intracellular particles. Biochem. J. 84: 76p-.

(2200) Dingle, J. T. 1962. Vitamin A-Lysosomal enzymes and the degradation of cartilage matrix. Proc. Roy. Soc. Med. 55: 109-111.

(2201) Dingle, J. T. 1963. Action of vitamin A on the stability of lysosomes in vivo and in vitro. Ciba Found. Symp. Lysosomes. 384-404.

(2202) Dingle, J. T. and J. A. Lucy. 1963. Vitamin A and membrane systems;interactions of vitamin A and Vitamin E. Biochem. J. 86: 15p.

(2203) Dingle, J. T. 1964. Penetration and stabilization of biological membranes by vitamin A. Biochem. J. 90(3): 36p-37p.

(2204) Dingle, J. T. 1964. Synthesis and degradation of connective tissue in organ cultures. Structure Function Connective Skeletal Tissue, Proc., St. Andrews, Scot. 431-435

(2205) Dingle, J. T. and J. A. Lucy. 1965. Vitamin A, carotenoids, and cell function. Biol. Rev. Cambridge Phil. Soc. 40(3): 422-461.

(2206) Dingle, J. T. ; et al. 1965. Membrane Phenomenons in relation to vitamin A. Proc. Nutr. Soc. 24: 170-172.

(2207) Dingle, J. T. ; et al. 1966. Synthesis of connective-tissue components. The effect of retinol and hydrocortisone on cultured limb bone rudiments. Biochem. J. 98(1): 173-181.

(2208) Dingle, J. T. 1966. Nutrition and lysosomal activity. The influence of the vitamin A status on the proteolytic activity of extracts from the livers and kidneys of rats. Biochem. J. 98: 476-484.

(2209) Dingle, J. T. 1969. Some effects of vitamin A on synthesis and degradation in connective tissues. Bibl Nutr Dieta. 13: 155-158.

(2210) Dinnerman, M. 1951. Vitamin A deficiency in unerupted teeth in infants. Jour. Oral Surg., Oral Med., and Oral Path. 4(8): 1024-1038.

(2211) Dinstl, K. ; et al. 1964. Significance of vitamin A resorption in the diagnosis and surgical indications in dumping syndrome. Zbl Chir. 89: 1114-1120.

(2212) Diotallevi, M. 1962. Effects of vitamin A on intraocular pressure. Minerva Oftal. 4: 18-19.

(2213) Dipasquale, G. ; et al. 1968. Vitamin A-Effect of lysosomal labilizers and pro-inflammatory substances on connective tissue repair as measured by tensile strength. Proc Soc Exp Biol Med. 127(2): 529-532.

(2214) Diplock, A. T. ; et al. 1960. Vitamin A-Untersuchungen uber Vitamin E. 4. Mitt. Gleichzeitige Bestimmungen von Tocopherolen, Ubichinonen und Ubichromenolen (Substanz SC) in tierischen Geweben:eine Wiederuntersuchung des Keilin-Hartree-Herz Praparates. Biochem. J. 76: 563-571.

(2215) Diplock, A. T. ; et al. 1961. The effect of tocopherol, vitamin A, Selenium, and antioxidants on ubiquinone in the rat. Brit. J. Nutrition. 15: 425-441.

(2216) Diplock, A. T. ; et al, 1963. The determination of vitamin A in animal tissues and its presence in the liver of the vitamin A-deficient rat. Brit. J. Nutr. 17(2): 199-204.

(2217) Diplock, A. T. ; et al. 1965. Vitamin A and isoprenoid synthesis in the rat. Biochem. J. 95(1): 138-143.

(2218) Di Raimondo, F. and O. Schiraldi. 1959. Metabolic modifications in the course of rheumatic infection: vitamin A and carotene blood levels. Giorn. Mal. Infett. e Parassit. 11(11): 921-926.

(2219) Diriart, H. ; et al. 1963. Vitamin A-Dangers of excessive calcium therapy and vitamin A and D therapy in the infant. Clinique (Paris). 58: 535-538.

(2220) Dirscherl, W. ; et al. 1966. Vitamin A-Wirkung von Vitamin D , Dihydrotachysterin und Parathormon auf den Amino-Stickstoff im Blut von Kaninchen. Arzneimittel-Forsch. 16: 453-455.

(2221) Ditchburo, R. W. 1939. Vitamin A-rapid visual test for deficiency. Nature, London. 143-285.

(2222) Ditlefsen, Else-Marie Lindseth, and K. F. Stoa. 1954. Vitamin A and Carotenoid levels in blood serum with special reference to values observed in diseases of the liver. Scand. Jour. Clin. and Lab. Invest. 6(3): 210-216.

(2223) Dittmar, C. 1936. Uber den Einfluss der Kost auf das Wachstum von Impftumoren. X. Der Einfluss von Vitamin A. Zeitschr. Krebsforsch. 44(2): 73-78.

(2224) Dittmar, C. 1940. Vitamin A-Uber die Empfndlichkeit der Haut und des Bindegewebes bei verschiedenen Mausestammen gegen carcinogene Reize. Zeitschr. Krebsforsch. 50(1): 20-26.

(2225) Diven, R. H. and E. S. Erwin. 1958. Utilization of vitamin A and carotene by normal and deficient sheep. Proc. Soc. Exptl. Biol. and Med. 97(3): 601-603.

(2226) Diven, R. H. ; et al. 1960. Vitamin A and carotenoid inter-relationships in bovine plasma and liver. Jour. Dairy Sci. 43(11): 1632-1638.

(2227) Diven, R. H. 1960. Environmental and genetic influences on hepatic and plasma vitamin A and carotene levels in range cattle. Dissertation Abstr. 20: 3476-3477.

(2228) Dixon, S. 1930. Some recent food investigations. Tests for Vitamin A. Chemistry and Indust. 49(32): 663-668.

(2229) Dmitrovskii, A. A.; et al., 1970. Determination of retinal in the form of O-ethyloxime and study of the retinol-retinal ratio in some rat tissues. Biokhimiia 35: 768-774.

(2230) Dobson, K. J., 1969. Vitamin A-Osteodystrophy associated with hypervitaminosis A in growing pigs. Aust. Vet. J. 45: 570-573.

(2231) Dobronravavova, N. P., 1964. K voprosu o kriteriyakh obespechennosti organizma vitaminom A. (Criteria of adequate vitamin A supply in a living organism. Vop Pitan. 23(3) 26-29.

(2232) Dobronravova, N. P.; et al., 1969. Optimal vitamin A requirement of the organism. Vop. Pitan. 28(6): 51-54.

(2233) Dobrynina. 1961. Size of fatty globules and vitamin A concentration in the milk of Jersey and Holstein cows and their hybrids. Tr. Mosk. Vet. Akad. 39: 42-48.

(2234) Doctor, N. S., and Banerjee., 1939. Effect to antioxidants on the stability of vitamin A in ghee exposed to sunlight. Current Sci. 8: 513.

(2235) Dolbisch, G. A., 1957. Zur Methodik der Bestimmung von Vitamin A im Fett und der Gewinnung dieses Vitamins. Fischerei-Wirtsch. 33 (10): 85-86.

(2236) Dolbish, G. A., 1964. Content of vitamin A in liver and intestines of fish from the Bering Sea, and methods for the procurement of raw materials for the manufacture of vitamin A. Okeanogr. 216-222.

(2237) )Dolbish, G. A. and I. V. Kizevetter., 1965. Vitamin A content in Bering Sea fishes. Tr. Vses Nauch-Issled Inst. Morsk Rybn Khcz Okeanogr. 58: 303-310.

(2238) Dolbish, G. A.; et al., 1969. Vitamin content in the liver of some Pacific Ocean Sharks. Rybnoe Khozyaistvo 45(5): 60-62.

(2239) Dolge, K. L., 1955. Interrelation between carotene from artifically dehydrated alfalfa and vitamin A from a dry carrier when fed simultaneously to Holstein calves. Dissertation Abstr. 15: 2371-2372.

(2240) Dolge, K. L.; et al., 1956. Interrelationships between carotene from artificially dehydrated alfalfa and vitamin A from a dry carrier when fed simultaneously to Holstein calves. J. Dairy Sci. 39: 1660-1670.

(2241) Domagk, G. and P. von Dobeneck., 1933. Vitamin A-histologic studies showing effect of administration of excessive amounts of concentrated vitamin; effect on fat metabolism. Virchows Arch. f. Path. Anat. 290: 385-395.

(2242) Domanski, E.; et al., 1956. Carotene and vitamin A metabolism in pregnant cows and in calves. Vitamine u. Hormone 7: 249-262.

(2243) Domanski, E.; et al., 1956. Carotin und Vitamin-A-Stoffwechsel bei Kalbern und tragenden Kuhen. Roczniki Nauk Rolniczych, Ser. E. 67: 313-326.

(2244) Domart, C., 1951. Vitamin A-containing oils in Norway. Bull. Mens. ITERG. 5: 199-203.

(2245) Dominici, G. and G. Oliva, 1934. Water metabolism and vitamin A. Deut. Med. Wochschr. 60: 1955.

(2246) Dominici, G.; et al., 1934. Diuresis and vitamin A. Minerva Med. II: 715-718.

(2247) Dominova, S. R., 1970. New data on the composition of fish lipids. Pishchevaya Tekhnologiya (2): 115-118.

(2248) Donchenko, G. V., and R. V. Chagovets., 1964. Changes in the ubiquinone content in the livers of normal and vitamin A-deficient rats under the influence of cortisone acetate. Ukr. Biokhim. Zh. 36(5): 772-777.

(2249) Donchenko, G. V., 1964. Content of ubiquinone in liver homogenates and mitochondria of white rats during development of avitaminosis A. Ukr. Biokhim. Zh. 36(4): 438-491.

(2250) Donchenko, G. V., and R. V. Chagovets., 1965. The effect of vitamin E and phenylalanine on the content of ubiquinone in the liver of normal and vitamin A-deficient rats. Ukr. Biochim. Zh. 37(1): 82-90.

(2251) Donchenko, G. V., 1965. Effect of amytal and thiopental on the ubiquinone content of the liver in normal rats and those with avitaminosis A. Vop. Med. Khim. 11(6): 64-67.

(2252) Donchenko, G. V.; et al., 1965. Changes in ubiquinone content of the liver caused by cortisone acetate in normal and vitamin A-deficient rats. Fed. Proc. 24: 983-985.

(2253) Donchenko, G. V. 1969. Effect of phenylalanine administration on liver ubquinone levels in control and vitamin A-deficient rats fed cortisone acetate. Vop. Med. Khim. 15(2): 181-183.

(2254) Donald, E. A.; et al., 1958. Nutritional status of selected adolescent children. II. Vitamin A nutrition assessed by dietary intake and serum levels. Blomicroscopic and gross observation Am. J. Clin. Nutrition 6: 126-135.

(2255) Donath, W. F. 1929. Der Nahrwert von Buchsenmilch und Milchpulver. Mededcel. Dienst Volksgezondheid. Ned. Indie 1-57.

(2256) Donath, W. F., 1929. The nutritive value of canned milk and milkpowder. Mededeel. Dienst Volkgezondheid Ned.-Indie 1929: 243-300.

(2257) Donath, W. F.; et al., 1935. Voedingstabellen. Geneesk. Tijdschr. Nederland.-Indie 75(5): 426-446.

(2258) Donath, W. F., and J. P. Spruyt. 1938. Nutritional value of red-palm oil and its provitamin A content. Dept. Econ. Aff. Comm. Int. Serv. Bur. Comm. Balavia 10pp.

(2259) Donath, W. F., en F. J. Gorter. 1938. Vitamine A-en C- en carotinoidenbepalingen in het bloed van de dessabevolking van de gebieden rond Grissee, Segalaherang en Tjiandjoer. Geneesk. Tijdschr. Nederland-Indie 78(37): 2235-2274.

(2260) Donath, W. F.; et al., 1956. Influence of vitamin D upon the metabolism of calcium. I. II. Koninki, Ned. Akad. Wetenschap., Proc., Ser. C, 59: 111-122.

(2261) Donato, J.; et al., 1934. Vitamin A-effects on humoral reactions in human tuberculosis. Compt. Rend. Acad. d. Sc. 198: 397-399.

(2262) Donovan, G. A., 1965. Vitamin A requirement of growing birds. I. Influence of breed. Poultry Sci. 44(5): 1292-1298.

(2263) Doraiswami, S., and J. Yudkin., 1948. Vitamin A-deficiency in university students. Brit. Med. J. 2: 708-710.

(2264) Doraiswamy, T. R.; et al., 1969. Effect of supplementary protein food based on a blend of cotton seed, groundnut and Bengal gram flours and fortified with vitamins and minerals on the growth, nutritional status and nitrogen balance in children subsisting on poor Kaffir corn diet. J. Nutr. Diet. 6(4): 336-342.

(2265) Dormer, B. A. and M. Gibson. 1942. Vitamin A deficiency in tuberculosis and diabetes, and the effect of various therapeutic preparations. S. African J. Med. Sci. 7: 109-119.

(2266) Dornbush, A. C. ; et al. 1940. The carotene and vitamin A contents of market milks. Milk Plant Monthly. 29(6): 66-67.

(2267) Dornbush, A. C. ; et al. 1940. The carotene and vitamin A contents of market milks. J. Am. Med. Assoc. 114: 1748-1751.

(2268) Dost, F. H. 1937. Vitamin A-graduated photometry as method for determining content of human blood. Klin. Wchnschr. 16: 273-275.

(2269) Dost, F. H., und H. Schotola. 1942. Vitamin A-Eine kritische Stellungsnahme von Agrikulturchemie und Medizin zur Frage der alleinigen Stallmistdungung bei Gemuse. B. Sauglingsernahrungsversuche mit verschieden gedungten Gartenmohren und Tomaten. Ernahrung. 5(2): 37-42.

(2270) Dost, F. H. and H. Rind. 1957. Kinetic analysis of serum vitamin A after its administration. Intern. Z. Vitaminforsch. 27: 479-493.

(2271) Douglas, D. and J. E. Richardson. 1930. The effect of storage and canning on the vitamin A, B and C content of carrots. J. Home Econ. 22:859-860.

(2272) Douthwaite, A. H. 1942. Vitamin A-inquiry into treatment of gastric ulcer. Guy's Hosp. Rep. 91: 97-98.

(2273) Dovgyallo,G.K.H.;et al. 1969. Comparative evaluation of the effect of vitamins E and A and nicotinic acid and diet No. 10 on some indices of lipid and protein metabolism in patients with atherosclerosis. Ter Arkh. 41(11): 34-38.

(2274) Dow, D. J. and D. M. Steven. 1941. Vitamin A-simple methods for diagnosing deficiency by measurements of dark adaptation. J. Physiol. 100: 256-262.

(2275) Dowler, M. W. and D. H. Laughland. 1952. Application of chromatography to estimation of vitamin A in low-potency fish oils. Anal. Chem. 24: 1047-1049.

* (2276) Dowling, J. E. and G. Wald. 1958. Vitamin A deficiency and night blindness. Proc. Natl. Acad. Sci. U.S. 44: 648-661.

(2277) Dowling, J. E. und G. Wald. 1960. Die biologische Funktion von Vitamin-A-Saure. Proc. nat. Acad. Sci. USA. 46: 587-608.

(2278) Dowling, J. E. 1960. Vitamin A-Chemie der visuellen Adaptation bei der Ratte. Nature London. 188: 114-118.

(2279) Dowling, J. E., and I. R. Gibbons. 1961. The effect of vitamin A deficiency on the fine structure of the retina. In: The Structure of the Eye. G. K. Smelser, Editor. Academic Press: New York p. 85-99.

(2280) Dowling, J. E. 1964. Vitamin A-Nutritional and inherited blindness in the rat. Exptl. Eye Res. 3(4): 348-356.

(2281) Dowling, J. E. 1966. Vitamin A-Night blindness. Sci. Amer. 215(4): 78-84.

(2282) Drablos, A. and J. Slordahl. 1959. Chronic vitamin A poisoning. Acta Paediat (Upps). 48: 507-508.

(2283) Dragunov, A. M. and N. E. Kasinova. 1949. The vitamin A content of the commercial fish and dolphins of the Azov-Black Sea basin. Rybnoe Khozyaistvo. 25(11): 42-46.

(2284) Drasnin, R. and R. F. Krause. 1957. Vitamin A-choline interrelation. Proc. Soc. Exptl. Biol. Med. 95: 574-576.

(2285) Dreizen, S. ; et al. 1955. Vitamin A-Distribution of selected vitamins in human whole saliva. Intern. Z. Vitaminforsch. 26: 257-262.

(2286) Dreizen, S. ; et al. 1960. The influence of vitamin A and ammonium chloride on the growth and longevity of rats fed a deficient diet supplemented with nonfat milk. Int. Z. Vitaminforsch. 30: 245-254.

(2287) Drennan, A. M. ; et al. 1931. Vitamin A-Studies on rat thyroids. Brit. Jour. Exp. Path. 12(6): 430-441.

(2288) Dresser, D. W. 1968. Adjuvanticity of vitamin A. Nature. 217(5128): 527-529.

(2289) Dreyfus, C., 1940. Vitamin A-vitamin and passive defense against hemeralopia. Paris Med. 1: 126-127.

(2290) Dreyfus, J. R., 1952. A D E milk and further suggestion for vitaminzation of bottled milk in Switzerland. Ann. Paediat. 178: 207-215.

(2291) Dreyfus, J. R., 1953. Problem of deficit of exogenous vitamins D and A; milk enriched with vitamins A and D; goiter with vitamin A deficiency. Arch. Franc. Pediat. 10: 358-361.

(2292) Dreyfus-Newman, S. 1947. Vitamin A and hypervitaminosis D. Semaine d. Hop. Paris 23: 1617-1618.

* (2293) Drigalski, W. V. 1933. Vitamin A-impairment of organism by overdosage. Klin. Schnschr. 12: 308-309.

(2294) Drigalski, W. V. und Walter Laubmann. 1933. Uber Schadigungen durch Vitamin A. Histologische Untersuchungen an Rattenorganen. Klin Wschr. 12: 1171-1174.

(2295) Drigalski, W. V 1934. Uber lokale Vitaminwirkung bei Lebertranverbanden. Z. Vitaminforschg. 3: 260-68.

(2296) Drigalski, W. V., 1934. Uber Carotin-Vitamin A im menschlichen Korper. Zeitschr. Vitaminforsch. 3(1): 37-74.

(2297) Drigalski, W. V.; et al., 1939. The occurrence and actual measurement of vitamin A deficiency. Klin. Wochschr. 18: 875-877.

(2298) Drigalski, W. V. 1939. Vitamin A requirement in man. I. Healthy adults. Klin. Wochschr. 18: 1269-1270.

(2299) Drigalski, W. V. 1939. Vitamin A-in pregnant, nursing and ailing subjects. Ibid. 1318-1319.

(2300) Drigalski, W. V., 1939. Experimental vitamin A deficiency in man. Z. Vitaminforsch. 9: 325-330.

(2301) Drigalski, W. V. 1940. Vitamin A-supply of German population. Klin. Wchnschr. 19: 294-296.

(2302) Drigalski, W. V. 1940. Der Vitamin A Bedarf: Soll und Haben. Ernahrung 5(8): 181-185.

(2303) Drigalski, W. V., 1942. Vitamin A-deficiency states and the therapeutic application of vitamin A. Klin Wochschr. 21:1110.

(2304) Drigalski, W. V., 1942. The determination of the vitamin (A, $B_1$, C) requirements by deprivation experiments on man. Deut. Med. Wochschr. 68: 605-608.

*(2305) Drill, V. A., 1943. Interrelations between thyroid function and vitamin metabolism. Physiol. Revs. 23: 355-379.

(2306) Drill, Victor A., and Aldo P. Truant., 1947. Effect of thyroidectomy on the conversion of carotene to vitamin A. Endocrinology 40(4): 259-264.

(2307) Droegemueller, E. H., 1943. Vitamin A-preventive therapy in recurrent urinary lithiasis. Illinois Med.J. 83: 34-38.

(2308) Droese, W. and H. Bramsel. 1941. Vitamin tables of the most common foods. Erndhrung, Beih. 8: 1-63.

(2309) Droese, W., and H. Stolley., 1953. Vitamin A-Feeding infants with condensed milk as compared with usual milk mixtures. Monatschr. Kinderheilk, 101: 285-292.

(2310) Druckrey, H., 1939. Vitamin A-Uber Bedingungen der ostrogenen Wirkung. Arch. Exp. Path. u Parmakol. 192(1): 85-89.

(2311) Drujan, B. D.; et al., 1968. Application of fluorometry in the determination of vitamin A. Anal. Biochem. 23(1): 44-52.

(2312) Drummond, J. C., and K. H. Coward., 1920. Vitamin-A-Researches on the fat-soluble accessory substance. Biochem. J. 14: 661-664.

(2313) Drummond, J. C. ; et al. 1921. Researches on vitamine A. VII. Notes on the factors influencing the value of milk and butter as sources of vitamine A. Biochem. J. 15: 540-552.

*(2314) Drummond, J. C. und A. F. Watson. 1922. Vitamin A-Prufung der Nahrungsstoffe auf Vitamine. Analyst. 47: 235-246.

(2315) Drummond, J. C. 1924. Vitamin A-Einige moderne Bestrebungen der Vitaminforschung. Chemistry and Ind. 43: 908-911.

(2316) Drummond, J. C. ; et al. 1924. Der Einflus der Lagerung und Emulsionierung auf das Vitamin A in Lebertran. Jour. Soc. Chem. Ind. 43: T. 236-238.

(2317) Drummond, J. C. ; et al. 1925. Die Beziehung der Sterine zum Vitamin A. Journ. Soc. Chem. Ind. 44: T. 123-124.

(2318) Drummond, J. C. ; et al. 1925. Uber die Technik der Prufung auf Vorhandensein von Vitamin A. Biochemical Journ. 19: 1068-1074.

(2319) Drummond, J. C. 1926. Vitamin A-Neuere Untersuchungen uber die fettloslichen Vitamine. Proc. of the Roy. Soc. of Med. 19. Sect. of Comp. Med. 25-30.

(2320) Drummond, J. C. 1926. Vitamin A-Neue Tatsachen uber die fettloslichen Vitamine. Lancet. 210: 272-273.

(2321) Drummond, J. C. 1928. The vitamin A content of cod-liver oils. Lancet. I: 1353-1354.

(2322) Drummond, J. C. und L. C. Baker. 1926. Weitere Studien uber die chemische Natur des Vitamin A. Vgl. C. I: 2808.

(2323) Drummond, J. C. and R. A. Morton. 1929. Observations on the assay of vitamin A. Biochem. Jour. 23(4): 785-802.

(2324) Drummond, J. C. ; et al. 1930. Weitere Beobachtungen uber die Beziehung zwischen Carotin und Vitamin A. Journ. Soc. Chem. Ind. 49. Transact 291-296.

(2325) Drummond, J. C., and R. J. MacWalter., 1933. Biological relation between carotene and vitamin A. Biochem. J. 27: 1342-1347.

(2326) Drummond, J. C., and R. J. MacWalter., 1934. The fate of carotene injected into the circulation of the rat. Jour. Physiol. 83 (2): 236-242.

(2327) Drummond, J. C.; et al., 1935. Absorption of carotene and vitamin A. Brit. Med. J. 1: 1208-1210.

(2328) Drummond, J. C., and R. J. Macwalter. 1935. Provitamin A in the food of whales. J. Exptl. Biol. 12: 105-107.

(2329) Drummond, J. C., 1939. Vitamin A-Health aspects of milk supply. Dairy Inds. 4: 163-165.

(2330) Drury, A. N.; et al., 1930. Vitamin B deficiency in the rat. Bradycardia as a distinctive feature. Biochem. Jour. 24(6): 1632-1649.

(2331) Dryerre, H., 1933. Vitamin A-Vitamine und die Verhinderung von Abort bei Schafen. Nature, London 132: 751.

)2332) Dua, P. N., and Elbert J. Day., 1964. Effect of high dietary vitamin A levels on the utilization of carotenoids by broilers. Poultry Sci. 43(6): 1511-1514.

(2333) Dua, P. N.; et al., 1965. High levels of vitamin A in check rations. J. Miss. Acad. Sci. 11: 289-293.

(2334) Dua, P. N.; et al., 1966. Influence of dietary vitamin A on carotenoid utilization, nitrogen retention and energy utilization by the chick. J. Nutr. 90(2): 117-122.

(2335) Dua, P. N.; et al., 1967. Effect of dietary vitamin A and choloesterol on cholesterol and carotenoid content of plasma and egg yolk. Poultry Sci. 46(2): 530-533.

(2336) Dua, P. N., 1968. Influence of dietary vitamin A on cholesterol and carotenoid metabolism of chickens. Diss. Abstr. B. 28(8): 3117.

(2337) Dua, P. N. ; et al. 1968. Influence of different forms of vitamin A, Thyroxine, and Thiouracil on carotenoid utilization by chicks. Proc. Soc. Exp. Biol. Med. 128(1): 262-265.

(2338) Dubin, H. E. and C. Funk. 1923. Vitamin A-Untersuchungen uber die Chemie des Dorschlebertrans. I. Der Einflus auf die Hydrierung auf den Vitamingehalt. II. Ein Lebertrankonzentrat mit antirachitischen und antiophthalmischen Eigenschaften. Journ. Metabol Res. 4: 461-479.

(2339) Dubin, H. E. und C. Funk. 1924. Vitamin A-Untersuchungen uber die Chemie des Dorschlebertrans. II. Ein Lebertrankonzentrat mit antirachitischen und antiophthalmischen Eigenschaften. Proc. Soc. Exptl. Biol. Med. 21: 458-460.

(2340) Dubin, H. E. und C. W. Hooper. 1932. Uber die quantitative Anwendung der Antimontrichloridfarbreaktion fur Vitamin A. Journ. Biol. Chemistry. 97(1): 5-6.

(2341) Dublin, W. B. and B. M. Hazen. 1948. Relation of keratosis seborrheica and keratosis senilis to vitamin A deficiency. Arch. Derm. and Syph. 57(2): 178-183.

(2342) Dubois, G. 1936. Vitamin A-Vitamin control. Ann. Zymol. 3: 163-175.

(2343) Dubouloz, P. and M. F. Hedde. 1943. Vitamin A content of liver of the dogfish, Scyllium stellaris L. Compt. Rend. Soc. Biol. 137: 764-765.

(2344) Dubouloz, P. and C. Gasguy. 1946. Influence of esterification and of association with tocopherol on storage of vitamin A in the rat. Compt. Rend. Soc. Biol. 140: 621-622.

(2345) Dubouloz, P. ; et al. 1949. Influence of tocopherol on deposition of vitamin A. Bull. Soc. Dhim. Biol. 31: 1273-1278.

(2346) Dubouloz, P. and R. Marville. 1950. Determination of vitamin A factors in foods. II. Divergency between biological and physicochemical assays. Bull. Soc. Chim. Biol. 32: 815-823.

(2347) Dubouloz, P. and H. Martinet. 1955. Biological determination of vitamin A by means of the chicken. I. Preliminary investigations. Ann. Inst. Natl. Recherche Agron., Ser. D. Ann. Zootech. 4: 201-213.

(2348) Duc, C. 1938. Vitamin A-keratomalacia due to avitaminosis; cases. Rassegna Ital. d'ottal. 7: 791-815.

(2349) Dufour, A. L. 1964. Vitamin A-Survival food composition. Fr. Appl. 11pp.

(2350) Dufrenoy, M. 1939. Vitamin A-The agricultural aspect of the vitamin problem. Rev. Gen. Sci. 50: 144-148.

(2351) Dugal, L. C., and L. Riou. 1947. Vitamin A-La valeur nutritive des foies de loupmarin. Fish Res. Bd. Canada Progr. Repts. 37: 9-10.

(2352) Dugan, L. R. ; et al. 1950. Vitamin A-Butylated hydroxyanisole as an antioxidant for fats and foods made with fat. Food Technol. 4: 457-460.

(2353) Dugan, R. E. ; et al. 1961. The specific determination of vitamin A and other carotenoids in the presence of one another. Rept. on Contract W31: 109-138.

(2354) Dugan, R. E. ; et al. 1964. Colorimetric determination of vitamin A and its derivatives with trifluoroacetic acid. Anal. Chem. 36(1): 114-117.

(2355) Dugdale, C. M. und R. J. Munro. 1926. Vitamin A-Vitamingehalt der in der Hitze sterilisierten Nahrungsmittel. Journ. Soc. Chem. Ind. 45. T: 135-140.

(2356) Duke-Elder, S. 1946. Vitamin A-The nutrition aspect of ophthalmology. Irish Jour. Med. Sci. 6(246): 177-189.

(2357) Duliere, W. ; et al. 1929. Die behauptete Beziehung zwischen Carotin und Vitamin A. Journ. Soc. Chem. Ind. 48. T: 316-321.

(2358) Dumitru, M. 1966. Influence of Kroutzin anticancerous antibiotic in combination with vitamin-A on the mitotic activity and growth of sarcoma-180 in mice. An. Univ. Bucuresti Ser. Stiint. Natur. 15: 93-99.

(2359) Dumont, L. and A. Lambrechts. 1942. Vitamins A, B and C in deficiency edemas. Rev. Belge Sci. Med. 14: 21-24.

(2360) Dumont, M. 1961. Vitamins during pregnancy and the puerperium. I. Vitamin A. Rev. Franc. Gynec. Obstet. 56: 565-569.

(2361) Dunagin, P. E. Jr. and J. A. Olson. 1964. Gas liquid chromatography of retinol (vitamin A) derivatives. Anal Chem. 36(4): 756-759.

(2362) Dunagin, P. E. Jr. and J. A. Olson. 1964. Gas liquid chromatography of retinol (vitamin A) derivatives. Fed. Proc. 23(2 Pt. 1): 527.

(2363) Dunagin, P. E. Jr. 1965. Vitamin A-Isolation and metabolism of radioactive retinol, retinal, and retinoic acid by the rat in vivo. Dissertation Abstr. 25(12): 6927.

(2364) Dunagin, P. E. Jr. ; et al. 1965. Retinoyl beta-glucuronic acid: A major metabolite of vitamin A in rat bile. Science. 148(3666): 86-87.

(2365) Dunagin, P. E. ; et al. 1966. Vitamin A-The identification of metabolites of retinal and retinoic acid in rat bile. Biochim Biophys. Acta. 124(1): 71-85.

(2366) Duncan, C. J. 1964. The taste bud membrane and the role of vitamin A. Intern. Z. Vitaminforsch. 34(4): 410-414.

(2367) Dunckley, G. G. and Y. J. MacFarlane. 1955. Verteilungschromatographie von Vitamin-A-Alkohol und deren Anwendung auf das Unverseifbare des Lebertrans. J. Sci. Food Agric. 6: 559-564.

(2368) Dunn, L. C. 1924. Die Wirkung von Lebertran in verschiedenen Mengen und Formen auf das Wachstum junger Huhner. Vitamin A. J. Biol. Chem. 61: 129-136.

(2369) Dunn, L. C. 1924. Vitamin A-Wirkung trockner Aufbewahrung auf die antirachitische Wirksamkeit von Lebertran. Science. 59: 485.

(2370) Dupin, H. 1969. Vitamin A deficiency. Afr. Med. 8(71): 507-511.

(2371) Du Plessis, J. P. ; et al. 1966. Biochemical evaluation of the nutrition status of urban primary school children: vitamin-A status. S. Afr. Med. J. 40: 1093-1097.

(2372) Durdle, W. M. 1964. Carotene utilization and other factors influencing vitamin A nutrition of rats and ruminants. Dissertation Abstr. 24(12): 4890-4891.

(2373) Duscheiko, A. A. 1960. Einbau des radioaktiven Methioninschwefels in die Proteine des Gewebes und des Blutserums von Ratten in Abhangigkeit von der Versorgung mit Vitamin A. Ukrain. Biochem. J. 32: 823-831.

(2374) Dusheiko, A. A. 1962. Incorporation of methionine-S35 into the tissues and blood serum of vitamin A deficient rats fed protein-deficient diets. Ukr. Biokhim. Zh. 34: 65-69.

(2375) Dusheiko, A. A. ; et al. 1969. Effect of vitamin A on the metabolism of acid mucopolysaccharides of the secretory tissues of glandular and muscular stomachs of chickens. Ukr. Biokhim. Zh. 41: 31-34.

(2376) Dusheiko, A. A. ; et al. 1970. Biological effect of vitamin A. Ukr. Biokhim. Zh. 42: 530-541.

(2377) Dutcher, R. A. ; et al. 1927. Vitamin studies. XVI. Vitamin A in evaporated milk made by vacuum and aeration methods. Jour. Biol. Chem. 75(1): 85-94.

(2378) Dutcher, R. A. ; et al. 1927. Vitamin studies XV. Assimilation of vitamins A and D in presence of mineral oil. Proc. Soc. Exp. Biol. & Med. 24(9): 953-955.

(2379) Dutcher, R. A. ; et al. 1934. Vitamin studies. XIX. The assimilation of carotene and vitamin A in the presence of mineral oil. J. Nutrition. 8: 269-283.

(2380) Duthie, R. B. 1962. Vitamin A-Sulfate 355 in bone repair of rats. Radioisotopes Bone, Symp., Princeton, N.J. 1960, 293-313, discussion 313-316.

(2381) Dutt, B. ; et al. 1959. Vitamin A deficiency and urinary calculi in goats. Brit. Vet. Jour. 115(2): 63-66.

(2382) Dutt, B. and Vasudevan. 1962. Experiment on vitamin A deficiency in cow calves. Agric. Res. (India) 2(4): 306.

(2383) Dutt, B. and B. Vasudevan. 1962. Clinical syndromes and histopathological changes in Vitamin A deficiency in cow calves. Indian Vet. Jour. 39(11): 584-587.

(2384) Dutt, B. and P. C. Sawhney. 1962. Epithelial metaplasia in experimental vitamin A deficient lambs. Brit. Vet. Jour. 118(1): 24-28.

(2385) Dutt, B. and P. C. Sawhney. 1969. Vitamin A deficiency and urinary calculi in sheep. Indian Vet. J. 46(9): 785-788.

(2386) Dutt, B. and B. N. Majumdar. 1969. Epithelial metaplasia in experimental vitamin A deficient goats. Indian Vet. J. 46(9): 789-791.

(2387) Dutta, S. C. 1941. Vitamin A-deficiency in tea estate in Upper Assam. Indian Med. J. 35: 118-122.

(2388) Dvorak, M. 1959. Carotene and vitamin A in the blood plasma of cows in the last period of pregnancy and after delivery. Sbornik Ceskoslov. Akad. Zemedel. Ved, Vet. Med. 4: 331-344.

(2389) Dvorak, M. 1962. The effect of axerophthol Spofa applied parenterally and per os on the vitamin A content in blood. Ved. Prace Ustred, Vyzkum. Ustavu Vet. Lekar. Brne. 2: 171-182.

(2390) Dyban, A. P. 1967. Vitamin A-Some current problems of experimental teratology. Vestn. Akad. Med. Nauk. SSSR. 22: 18-30.

(2391) Dyer, F. J. ; et al. 1934. Uber den Einfluβ des Losungsmittels auf die Vitamin-A-Wirksamkeit von a) Carotin u. b) Lebertran. Biochemical J. 28: 875-881.

(2392) Dyer, H. M. and J. H. Roe. 1941. Vitamin A-The relation of nutrition to gastric function. III. The effect of vitamin B deficiency. Am. J. Digestive Diseases. 8: 329-333.

(2393) Dyer, I. A. ; et al. 1957. The effects of fat, oxytetracycline, and stilbestrol on performance and hepatic stores of carotene and vitamin A in steers. J. Animal Sci. 16: 828-832.

(2394) Dyme, H. C. 1939. Vitamin A-Effect of treated fats on vitamin potency. Iowa State Coll. J. Sci. 14: 29-31.

(2395) Dyme, H. C. 1941. The effect of treated fats on vitamin A potency. Iowa State Coll. J. Sci. 15: 189-212.

(2396) Dye, M.; et al., 1945. The effect of the level of protein in the diet on the utilization of vitamin A. J. Nutrition 29: 341-347.

(2397) Dye, M.; et al., 1947. The conjoint effects of varied intakes of thiamine and vitamin A on rats. Jour. Nutrition 33(4): 459-467.

(2398) Dzhelieva, Z. N.; et al., 1967. Effect of vitamin A deficiency on the content of folic and folinic acids in the blood of Macacarhesus. Byull. Eksp. Biol. Med. 64(8): 48-51.

(2399) Dzialoszynski, L. M.; et al., 1945. The mode of occurrence of carotene and vitamin A in human blood plasma. Biochem. Jour. 39(1): 63-69.

(2400) Dzialoszinski, L., and W. Tomaszewski. 1947. Vitamin A content in human liver. Edinburgh Med. Jour. 54(4/5): 252-259.

*(2401) Dziewiatkowski, Dominic D., 1954. Vitamin A and endochondral ossification in the rat as indicated by the use of sulfur-35 and phosphorus-32. Jour. Expt. Med. 100(1): 11-24.

(2402) Dzulynska, J.; et al., 1967. Changes in the nature and level of sialic acid in calf serum in the postnatal period. Bull. Acad. Pol. Sci. Ser. Sci. Biol. 15(8) 461-464.

(2403) Eakin, R. M., and J. A. Westfall. 1962. Effects of Vitamin A Deficiency on photo-receptors in the lateral and median eyes of lizard, Sceloporus occidentalis. Amer. Zool. 2(4): 520.

(2404) Eakin, R. W., 1964. The effect of vitamin A deficiency on photo-receptors in the lizard Sceloporus occidentalis. Vision Res. 4(1/2): 17-22.

(2405) Earle, K. V., 1945. Vincent's infection in northern Peru. Trans. Roy. Soc. Trop. Med. and Hyg. 39(1): 77-82.

(2406) Easley, G. T., 1955. Nutrition in bovine infertility. Proc. Amer. Vet. Med. Assoc. 367-371.

(2407) Eaton, H. D.; et al., 1947. The effect of a massive dose at birth of vitamins A and D upon calves. Jour Dairy Sci. 30(10):795-800.

(2408) Eaton, H. D.; et al., 1949. The carotene and vitamin A and proximate composition of portions of the first milking postpartum. Jour. Diary Sci. 32(6): 587-595.

(2409) Eaton, H. D.; et al., 1949. The utilization of fetal stores of vitamin A by the new born calf. J. Dairy Sci. 32: 764-768.

(2410) Eaton, H. D.; et al., 1949. Prepartum milking. II. The effect of prepartum milking on the carotene and vitamin A and proximate composition of colostrum. J. Dairy Sci. 32: 919-926.

(2411) Eaton, H. D.; et al., 1949. Prepartum milking. III. The plasma levels of carotene and vitamin A in calves from dams milked prepartum and in calves from dams milked postpartum. J. Dairy Sci. 32: 1032-1037.

(2412) Eaton, H. D.; et al., 1951. Effect of vitamin A depletion on live weight, plasma, and liver levels of vitamin A and microanatomy in young dairy calves. J. Dairy Sci. 34: 386-395.

(2413) Eaton, H. D.; et al., 1951. Intravenous and oral administration of an aqueous suspension of carotene to calves depleted of their vitamin A stores. J. Dairy Sci. 34: 1073-1080.

(2414) Eaton, H. D.; et al., 1952. Blood levels of ascorbic acid and vitamin A during vitamin A depletion and effect of administration of ascorbic acid during terminal vitamin A depletion in the dairy cow. J. Dairy Sci. 35: 607-614.

(2415) Eaton, H. D.; et al., 1958. Association between plasma and liver concentrations of vitamin A or tocopherol in Holstein male calves fed fixed intakes of these vitamins. Jour. Dairy Sci. 41(10): 1456-1459.

(2416) Eaton, H. D.; et al., 1959. Conversion of carotene from alfalfa to vitamin A by Guernsey and Holstein calves. Jour. Dairy Sci. 42(4): 642-650.

(2417) Eaton, H. D.; et al., 1961. Association between cerebrospinal fluid pressure and plasma vitamin A concentration of Holstein calves fed fixed intakes of carotene. Jour. Dairy Sci. 44(7): 1368-1370.

(2418) Eaton, H. D.; et al., 1964. Vitamin A in serum and liver of weanling pigs fed a protein-deficient diet and fixed intakes per unit of liver weight of carotene in oil. Jour. Nutr. 82(3): 343-352.

(2419) Eaton, H. D.; et al., 1964. Zusammenhang zwischen Druck von Liquor cerebrospinalis und Vitamin-A-Konzentration der Leber von Holsteinkalbern bei festgesetzten Carotin-Gaben. J. Dairy Sci. 47: 1016-1017.

(2420) Eaton, H. D., 1969. Chronic bovine hypo-and hypervitaminosis A and cerebrospinal fluid pressure. Amer. J. Clin. Nutr. 22(8): 1070-1080.

(2421) Eaton, H. D.; et al., 1970. Association of plasma or liver vitamin A concentrations with the occurrence of parotid duct metaplasia or of ocular papilledema in Holstein male calves. J. Dairy Sci. 53: 1775-1779.

(2422) Eayrs, J. T., 1956. Vitamin A-effect on development of hypothyroid rats. J. Neuropath. and Exper. Neurol. 15: 93-102.

(2423) Echeverria, Viteri F. E., 1955. La Deficiencia de Vitamina A en Guatemala como problems de salud publica. Guatemala. 83p.

(2424) Eddy, W. H.; et al., 1925. Vitamin A-Vitamine in Konserven. (III. Mitt. vgl. Ind. and Engin. Chem. 17: 69.

((2425) Eddy, W. H. ; et al., 1929. Vitamin A- Vitamins in canned foods. VII. Effect of storage on vitamin value of canned spinach. Ind. Eng. Chem. 21: 347.

(2426) Eddy, W. H.; et al., 1932. Vitamin A-Vitamine in Nahrungs-Mittelkonserven. XII. Erganzungsstoffnatur von Grapefruchten und Pflaumen. Ind. Engin. Chem. 24: 457-60.

(2427) Edelstein, E. 1926. Vitamin A-Die Bedeulung des Vitamingehaltes der Sauglingemilch. Dtsch. Med. Webschr. 52: 574-577.

(2428) Eden, Eva., 1948. The absorption of vitamin A from colostrum by lambs. Brit. Jour. Nutrition 2(1): 42-46.

(2429) Eden, E., and K.C. Sellers. 1949. The absorption of vitamin A in ruminants and rats. Biochem. Jour. 44(3): 264-267.

(2430) Eden, E., 1949. Vitamin-A-Mangel bei Haustieren. Veterin. Rec. 61: 845-851.

(2431) Eden, E., 1950. A micro method for separating free and esterified vitamin A. Biochem. Jour. 46(3): 259-261.

(2432) Eden, E. and K. C. Sellers. 1950. Hydrolysis and esterification of vitamin A absorption. Biochem. Jour. 46(3): 261-266.

(2433) Eden, E. and T. Moore. 1950. Vitamin A in der Niere der Ratte. Biochemic J. 47: 6-7.

(2434) Eden, E. and T. Moore. 1951. Vitamin A in the kidney of the rat. Biochem. J. 49: 77-79.

(2435) Ederer, S. 1925. Die Wirkung des fettloslichen A und des wasserloslichen B Faktors bei einseitiger Ernahrung. Biochem. Ztschr. 158: 197-202.

(2436) Edholm, O. G. 1942. Vitamin A-Physiology and dentistry. Brit. Dental J. 73: 195-199.

(2437) Edisbury, J. R. ; et al. 1937. Distribution of vitamin A in the tissues of the eels Anguilla vulgaris and A. aucklandi Rich. Biochem. Jour. 31(3): 416-423.

(2438) Edisbury, J. R. ; et al. 1938. The distribution of vitamin A and factor A. Biochem. Jour. 32(1): 118-140.

(2439) Edisbury, J. R. 1940. Vitamin A-spectrophotometric assay, with special reference to margarine. Analyst. 65: 484-493.

(2440) Edmund, C. and S. Clemmesen. 1937. Vitamin A-relation between visual adaptation and deficiency. Nord. Hyg. Tidskr. 18: 227-307.

(2441) Edwards, E. A. ; et al. 1951. Vitamin A-Spectrophotometry of living human skin in the ultraviolet range. J. Invest. Dermatol. 16: 311-321.

(2442) Edwards, R. L. ; et al. 1969. Vitamin A, corn silage and raw soybeans for finishing steers in drylot. J. Anim. Sci. 29(6): 940-947.

(2443) Edwin, E. E. ; et al. 1961. Vitamin A-Untersuchungen uber Vitamin E. 6. Mitt. Die Verteilung von Vitamin E in der Ratte und die Wirkung von Tocopherol und Selen-haltigem Futter auf Ubichinon und Ubichromenol in den Geweben. Biochem. J. 79: 91-105.

(2444) Edwin, E. E. ; et al. 1962. The effect of vitamin A on ubiquinone and ubichromenol in the rat, and its relation to the effect of vitamin E. Brit. J. Nutr. 16: 135-149.

(2445) Eeg-Larsen, N. and A. Pihl. 1951. Hypervitaminosis A and ascorbic acid. Acta Pharmacol. et Toxicol. 7(4): 367-375.

(2446) Eekelen, M. van. 1931. Detection of vitamin A in blood serum. Arch. Neerland. Physiol. 16: 280-281.

(2447) Eekelen, M. van and J. H. de Haas. 1934. About carotene and vitamin A in human milk, with special reference to colostrum. Acta Brevia Neerland. 4(2/3): 52-54.

(2448) Effern, J. 1940. The preparation of concentrates rich in vitamin A from butter and the determination of the vitamin with the Pulfrich photometer. Vorratspflege u. Lebensmittelforsch. 3: 53-58.

(2449) Eger, W. und H. Nassr-Esfahani. 1960. Vitamin A-Vitamine als nekrotrope Leberschutzstoffe. Z. Vitamin-, Hormon-u. Fermentforsch. (Wien) 11: 1-9.

(2450) Egorova, N. I. 1964. Alteration of the content of vitamin A and kitol in liver of finback and sperm whales during storage. Sb. Rabot Po. Tekhnol. Rybn. Produktov, Kaliningrad. 132-49.

(2451) E gorova, N. I. 1970. Changes of vitamin A content in stored frozen shark and tunny livers. Rybnoe Khozyaistvo. 46(3): 60-61.

(2452) Eguchi, Y. ; et al. 1971. Vitamin A-Experimental formation of goiter in exencephalic fetal rats subjested to maternal hypervitaminosis A. Endocrinology. 88: 261-263.

(2453) Eguchi, Y. ; et al. 1971. Vitamin A-Lack of hypertrophy of the adrenal in exencephalic fetal rats subjected to hypervitaminosis A and then to maternal adrenalectomy. Endocrinology. 88: 1528-1531.

(2454) Ehrengut, W. 1955. Vitamin A-acute benign hydrocephalus caused by hypervitaminosis A (Marie-See syndrome) associated with keratomalacia. Ztschr. Kinderh. 77: 468-482.

(2455) Ehrengut, W., 1961. Hypervitaminosis A and infection. Vitamine Hormone 8: 501-555.

(2456) Ehrlich, H. P. and T. K. Hunt. 1968. Effects of cortisone and vitamin A on wound healing. Ann. Surg. 167(3): 324-328.

(2457) Ehrlich, S. T.; et al., 1964. Response of vitamin A and carotene blood levels of preadolescent girls to dietary protein and vitamin A intakes. Fed. Proc. 23(2 Pt. 1): 293.

(2458) Ehrlich, S. T.; et al., 1965. Metabolic patterns in preadolescent children. XI. Response of vitamin A and carotene serum levels to dietary protein and vitamin A. J. Nutr. 84(4): 389-394.

(2459) Eichholtz, F., 1924. Uber die Anwesenheit von Vitamin A in Handelslecithin. Biochem. Ztschr. 144:70-71.

(2460) Eisen, M. E., 1965. Correcting blood pressure changes with niacin, vitamin A and riboflavine. U. S. 3,193,461.

(2461) Elantsev, B. V.; et al., Effect of vitamin C deficiency upon the vitamin A content in patients with chronic tonsilitis. Zh. Ushu. Nos. Gori. Bolez 29: 31-33.

(2462) Elder, J. H., 1943. Vitamin A-effectiveness in treatment of defective color vision. Science 97: 561-562.

(2463) El-Din, M. K.; et al., 1966. Serum vitamin A in infancy and childhood. I. in the normal. J. Trop. Pediat 12: 59-62.

(2464) Ed-Din, M. K.; et al., 1966. Serum vitamin A in infancy and childhood. II. In the malnourished. J. Trop. Pediat. 12: 63-70.

(2465) Elkan, E., and P. Zwart., 1967. The ocular disease of young terrapins caused by vitamin A deficiency. Pathol. Vet. 4(3): 201-202.

(2466) Ellenberger, H. A.; et al., 1947. Seasonal variations in the vitamin A and the carotene content of retail butters. J. Nutrition 33: 39-52.

(2467) Ellenberger, H. Albert., 1948. A study of the vitamin A content of vitamin A standards and of representative fish oils by spectrophotometric and biological methods of assay and a calculation of their respective conversion factors. University Microfilms No. 1310.

(2468) Ellenberger, H. A.; et al., 1949. The new vitamin A reference standard and its use in evaluating the vitamin A potency of fish oils. Jour. Nutrition. 37(2): 185-201.

(2469) Ellenberger, H.; et al., 1951. Influence of some associated factors on the results of vitamin A bioassay. Arch. Biochem. and Biophys. 32(1): 1-8.

(2470)) Ellenbogen, L. and D. R. Highley. 1963. Intrinsic factor. Vitamin A, vitamin D, cartilage, bones, and teeth. Vitamins Hormones. Robert S. Harris, Ira G. Wool, and John A. Loraine, editors. Academic 21: 1-49.

(2471) Eller, J. J. and L. Alberto Diaz. 1943. Vitamin A-Vitamins in dermatology. Urol. Cutaneous Rev. 47: 234-238.

(2472) Ellingson, R. C.; et al., 1951. Relative effectiveness of vitamins A and D in oil and water. Pediatrics 8(1): 107-116.

(2473) Elliot, J. S. 1954. Vitamin A and urolithiasis. California Med. 80(6): 462-463.

(2474) Elliot, M. C.; et al., 1940. Production of "prothrombin deficiency" and response to vitamins A, D and K. Proc. Soc. Exp. Biol. and Med. 43(2): 240-245.

(2475) Elliott, R. A. Jr. and R. L. Dryer., 1956. Hypervitaminosis A; case in adult. J. American Medical Asso.

(2476) Ellis, F. P., 1953. Infective hepatitis and arsenotherapy hepatitis as it occurred amongst naval personnel in Portsmouth during the 1939-1945 War. Jour. Hyg. 51(2): 145-156.

(2477) Ellis, H. C.; et al., 1937. The absorption of carotene and vitamin A in the human subject. Indian J. Med. Research 24: 807-811.

(2478) Ellis, H. L., and J. Jacobson. 1960. Benzyl cinnamate (Jacobson's solution) with Vitamin A. Harlem Hosp. Bull. 1: 97-102.

(2479) Ellis, N. R.; et al., 1933. Relation of diet to vitamin B and vitamin G content of eggs, together with observations on vitamin A content. J. Nutrition 6: 243-262.

(2480) Ellison, J. B., and T. Moore. 1937. The vitamin A reserves of the human infant and child in health and disease. Biochem. Jour. 31(1): 165-171.

(2481) Ellmore, M. F., and J. C. Shaw. 1954. The effect of feeding soybeans on blood plasma carotene and vitamin A of dairy calves. J. Dairy Sci. 37: 1269-1272.

(2482) Elmby, A., 1941. Metabolism of vitamins A, D and C. Nord. Med. 10: 1519-1520.

(2483) Elmer, A. W.; et al., 1935. Action of vitamins A. C and D on the normal thyroid and on the thyroid made hyperactive by treatment with the thyrostimulin of the anterior hypophysis. Compt. Rend. Soc. Biol. 120: 560-562.

(2484) Elmoty, A. E.; et al., 1967. Seasonal vitamin A and carotenoids in the blood plasma of buffaloes living in Egypt under natural conditions. Acta. Vet. Acad. Sci. Hung. 17(1): 1-3.

(2485) Elmoty, I. A.; et al., 1967. The influence of various orally and intramuscularly administered vitamin A preparations on the blood plasma level of vitamin A in buffaloes and camels. Acta. Vet. Acad. Sci. Hung. 17: 87-90.

(2486) Elmoty, I. A., and E. Elmossalami. 1967. Studies on the vitamin A and carotenoid contents in the milk of Egyptian farm animals. Acta. Vet. Acad. Sci. Hung. 17(2): 137-142.

(2487) Elmoty, I. A., and A. A. El-Malla., 1967. Effect of pregnancy and lactation on the vitamin-A plasma and colostrum level in buffaloes. Acta. Vet. Acad. Sci. Hung 17(2): 143-146.

(2488) Elmoty, I. A., and A. A. El-Malla., 1967. Seasonal vitamin A and carotenoid level in the blood plasma of Egyptian sheep. Acta Vet. Acad. Sci. Hung. 17(2): 147-148.

(2489) El Ridi, M. S.; et al., 1953. Variations in vitamin A and carotene values in cow and buffalo milk fat. Proc. Pharm. Soc. Egypt. Sci. Ed. 35 7:15-20.

(2490) Elvehjem, C. A., and V. F. Neu. 1932. Studies in vitamin A avitaminosis in the chick. Jour. Biol. Chem. 97(1): 71-82.

(2491) Elvehjem, C. A., and P. L. Pavcek. 1943. Vitamin A-How cooking affects vitamins. Modern Hosp. 61 4:110-115.

(2492) Ely, C. M.; et al., 1966. Vitamin A-Fat-soluble, vitamin-containing feed supplements. U. S. 3,293,131.

(2493) Ember, M.; et al., 1970. Changes of vitamin A in blood and liver of organophosphorus poisoned suicides. Res. Commun. Chem. Pathol. Pharmacol. 1(4): 561-571.

(2494) Embree, N. D., 1939. Vitamin A-occurrence of cyclized vitamin in fish liver oils. J. Biol. Chem. 128: 187-198.

(2495) Embree, N. D., and E. M. Shantz. 1943. Possible new member of the vitamin $A_1$ and $A_2$ group. J. Am. Chem. Soc. 65: 906-909.

(2496) Embree, N. D., 1947. Vitamin A-Fat soluble vitamins. Ann. Rev. Biochem. 16: 323-358.

(2497) Embree, N. D.; et al., 1950. Vitamin A-Report of The Vitamin Committee. J. Am. Oil Chemists'Soc. 27: 235-236.

(2498) Embree, N. D., and Orris Hawks. 1950. Concentration of vitamins A and D by selective absorption. U. S. Pat. Appl. 653,948. Official Gaz. 631: 1205.

(2499) Embree, N. D.; et al., 1957. Die Bestimmung von Vitamin A. Methods Biochem. Analysis 4: 43-98.

(2500) Embry, L. B.; et al., 1962. Vitamin A requirements of fattening cattle. In: 54th annual national meeting of the American Society of Animal Science. Jour. Animal Sci. 21(4): 994-995.

(2501) Emerick, R. J., and O. E. Olson. 1962. Effect of nitrate and nitrite on vitamin A storage in the rat. Jour. Nutrition 78(1): 73-77.

(2502) Emerick, R. J.; et al., 1967. Formation of retinoic acid from retinol in the rat. Biochem. J. 102: 606-611.

(2503) Emerique, L., 1932. Vitamin A-absorption and elimination of lipids during deficiency. Bull. Soc. Chim. Biol. 14: 305-312.

(2504) Emerique, L., 1933. Vitamin A-mineral composition of white rat in avitaminosis; effect of certain mineral disequilibriums in diet. Bull. Soc. Chim. Biol. 15: 1235-1238.

(2505) Emerique, M. L, 1934. L'avitaminose A et la composition chimique de L'animal. Compt. Rend. Acad. Sci. (Paris) 199(3): 240-242.

(2506) Emerique, L., 1935. Vitamin A-activity of glycerophosphatase in tissues of white rats with deficiency. Bull. Soc. Chim. Biol. 17: 1372-1377.

(2507) Emerique, L., 1936. Avitaminosis A and nitrogen metabolism. Compt. Rend. 203: 1546-1548.

(2508) Emerique, L. 1936. Deficiency of vitamin A in presence of variable amounts of vitamin D. Bull. Soc. Chim. Biol. 18: 384-389.

(2509) Emerique, L., 1937. Vitamin-A-Experimental rickets in guinea pigs. Compt. Rend. 205: 879-882.

(2510) Emerique, L., 1937. Nitrogen metabolism during avitaminosis A. Bull. Soc. Chim. Biol. 19: 859-876.

(2511) Emerique - Blum, L. 1938. Nitrogen distribution of white rat muscle in avitaminosis A. Compt. Rend. Soc. Biol. 127: 587-590.

(2512) Emiliani, P., and G. Bazzocchi, 1933. Experimental lithiasis; avitaminosis due to deficiency of vitamins A and B (with or without hypercholesterolemia) as lithogenetic factors. Riv. Di. Pat. Sper. 10: 72-92.

(2513) Emelina, N. T., and A. G. Troitskaya., 1958. The improved utilization of vitamin A preparations for feeding cooped, laying hens. Tr. Mosk. Vet. Akad. 23: 229-237.

(2514) Emelina, N. T., 1962. The effects of feeding pattern on vitamin A absorption. Vestn. Sel'skokhoz. Nauki. Vses. Akad. Sel'skohoz, Nauk 7. 10: 60-61.

(2515) Emmel, M. W., 1940. The hematology of avitaminosis A in dogs and rabbits. Jour. Amer. Vet. Med. Assoc. 97(761): 145-148.

(2516) Emmelot, P., and C. J. Bos. 1966. Plasmamembranen. 3 Mitt. $Mg^{2+}$-Adenosintriphosphatase-, ($Na^{+}$-$K^{+}$-$Mg^{2+}$)- Adenosintriphosphatase- und 5'-Nucleotidaseaktivitat von aus Rattenleber isolierten Plasmamembranen. Biochem. Biophsica Acta(Amsterdam)120:369-82.

(2517) Emmerie, A.; et al., 1931. Vitamin A and the antimony trichloride reaction. Nature 128: 495-496.

(2518) Emmerie, A. 1933 Ein Inhibitor der Antimontrichloridreaktion auf Vitamin A im Dorschlebertran. Nature, London 131: 364.

(2519) Emmerie, A. and L. K. Wolff. 1938. Vitamin A-Uber die Mikro bestimmung von Carotin in menschlichem Serum. Acta. Brevia Neerland. Physiol., Pharmacol., Microbiol. 8: 88-89.

(2520) Emmerie, A., and C. Engel. 1962. Vitamin A-Die x-Glycerylather des Lebertrans. Fette, Seifen, Anstrichmittel 64: 813-816.

(2521) Emmett, A. D., and G. O. Luros. 1919. Des Fehlen von fettioslichem Vitamin A in gewissen ganglosen Drusen. Journ. Biol. Chem. 38: 441-447.

(2522) Emmett, A. D. 1920. Fat-soluble A vitamine and xerophthalmia. Science 52: 157-158.

(2523) Emmett, A. D., and G. Peacock. 1923. Vitamin A-Does the chick require the fat-soluble vitamins? J. Biol. Chem. 56: 679-693.

(2524) Emmett, A. D.; et al., 1932. Vitamin A-A study of halibut-liver oil. I. With respect to vitamin potency, physical constants and tolerance. Ind. Eng. Chem. 24: 1073-1077.

(2525) Emori, Y. 1927. Vitamin A-Der Einflus des fettloslichen A auf die Regeneration der Knochengewebe der Ratte. Japanese Jour. of Med. Sciences IV. Pharmacology 2: 43-76.

(2526) Ender, F. 1932. Vitamin A-Reaction of fish-liver oils with antimony trichloride. Biochem. J. 26: 1118-1123.

(2527) Ender, F., 1934. Uber den Unterschied im A-Vitamin-Gehalt der Kuh-und der Stierleber. Zeitschr. Vitaminforsch 3(4): 247-253.

(2528) Engel, C., 1949. Die internationale Einheit fur Vitamin A und der neue internationale Standard. Chem. Weekbl. 45: 519-521.

(2529) Engel, C., 1952. The vitamin A, carotene aneurine, riboflavine, and vitamin C content of sterilized milk as compared with normal pasteurized milk. Moikerei- u. Kaserei-Zig. 3: 773.

(2530) Engel, C., 1954. Der ,,unbekannte" Vitamin-A-wirksame Stoff aus Schweineschmalz. Voeding 15: 73-74.

(2531) Engel, H. P., and F. P. N. Schennetten., 1956. Does hypervitaminosis A or vitamin A deficiency cause changes cardiovascular system? Ztschr. Ges. Inn. Med. 11: 769-774.

(2532) Engel, R. W., and P. H. Phillips. 1937. Effect of certain nutritional deficiencies on various phosphorus-containing fractions of the chick brain. Proc. Soc. Exp. Biol. and Med. 37(3): 553-556.

(2533) Engelund, A.; et al., 1955. Absorption of vitamin A from pills made with (solid) fats. Arch. Pharm. Chemi. 62: 161-170.

(2534) Engler, Markus., 1944. Vitamin A-Skin manifestations in vitamin deficiency. Practitioner 153(2): 102-106.

(2535) Eppright, E. S.; et al., 1963. Effect on girls of greater intake of milk, fruits, and vegetables. J. Am. Dietet. Assoc. 42: 299-305.

(2536) Erb, R. E.; et al., 1944. A technique for the simultaneous measurement of semen quality and testis histology in vitamin A studies of the dairy bull. Jour. Dairy Sci. 27(9): 769-772.

(2537) Erb, R. E.; et al., 1947. Observations on vitamin A deficiency in young dairy bulls. Jour. Dairy Sci. 30(9): 687-702.

(2538) Erbe, S., 1957. Vitamin A determination in cod-liver oil. Pharm. Zentralhalle 96: 611-620.

(2539) Erbe, S., 1957. The solid constituents crystallizing out of crude cod-liver oil. Pharmazie 12: 731-732.

(2540) Erbe, S., 1958. Vitamin A-Frozen liver oils from Baltic cod. Mitt. Deut. Pharm. Ges. 28: 1-4.

(2541) Erbe, S., 1958. Colorimetric determination ov vitamin A with various chlorohydrins. Z. Anal. Chem. 159: 327-332.

(2542) Erben, F., 1933. Vitamin A-therapeutic use in children's disease. Deutsche Med. Wchnschr. 59: 954-956.

(2543) Ermakova, M. A.; 1958. Influence of the breed of cows on the carotene and vitamins A and E content in milk. Sel'khozgiz: Moscow. 109-114.

(2544) Ermakov, M. A., 1958. Effect of green fodder on carotene and vitamin A content of milk and milk products. Doklady Vseso-yuz. Konf. po Moloch. Delu 177-182.

(2545) Eremina, G. V., 1968. Use of chromatography for the separation and quantitative determination of vitamin A and its derivatives. Lab. Delo. (2): 81-84.

(2546) Eremina, G. V.; et al., 1968. Detection of vitamin A-aldehyde, vitamin A-alcohol and vitamin A-palmitate in the blood plasma and liver of rats. Vop. Med. Khim. 14(4): 446-451.

(2547) Ernster, L. R.; et al., 1950. Vitamin A as a co-enzyme component in the mechanism of aerobic energy transport. Exptl. Cell. Res. 1(3): 494-496.

(2548) Ershoff, B. H., and H. J. Deuel, Jr., 1945. The effect of growth hormone on the vitamin A-deficient rat. Endocrinology 36(4): 280-282.

(2549) Ershoff, B. H., 1950. Effects of prolonged exposure to cold on the vitamin A requirement of the rat. Proc. Soc. Exptl. Biol. and Med. 74(3): 586-589.

(2550) Ershoff, B. H., and S. M. Greenberg., 1950. Effects of a transient vitamin A deficiency on subsequent resistance to cold. Proc. Soc. Exptl. Biol. and Med. 75(2): 604-607.

(2551) Ershoff, B. H., 1952. Effects of vitamin A malnutriture on resistance to stress. Proc. Soc. Exptl. Biol. and Med. 79(4): 580-584.

(2552) Ershoff, B. H., and S. M. Greenberg. 1953. Vitamin A-effects of transient deficiency on survival following x-irradiation. Exper. Med. and Surg. 11: 46-48.

(2553) Ershoff, B. H.; et al., 1957. Potentiating effects of materials of plant and animal origin on symptons of hypervitaminosis A in the rat. J. Nutrition 62: 527-538.

*(2554) Ershoff, B. H., 1957. Effects of flavonoids on response of rats fed massive and suboptimal doses of vitamin A. Proc. Soc. Exptl. Biol. Med. 95: 660-664.

(2555) Ershova, V. P., 1968. Characteristics of vitamin A metabolism on acute radiation sickness. Tr. Leningrad Nauch-Issled Inst. Radiat. Gig. 3: 122-131.

(2556) Ershoff, B. H., and H. J. Hernandez. 1960. An unidentified water-soluble factor in alfalfa which improves utilization of vitamin A. J. Nutr. 70: 313-320.

(2557) Erslev, K., 1925. Vitamin A enthaltende Speisefette. Holl. P. 18: 457.

(2558) Erspamer, V., 1938. Vitamin A-production of gallstones by deficiency in guinea-pigs. Virchow Arch. F. Path. Anat. 302: 766-783.

(2559) Erspamer, V., 1938. Uber die Erzeugung von Gallensteinen durch Vitamin-A-Mangelbeim Meerschweinchen. Virchow's Arch. Pathol. Anat. Physiol. Klin. Med. 302: 766-783.

(2560) Erwin, E. S.; et al., 1956. The influence of fat, chlortetracycline, and stilbestrol on vitamin A and carotene storage in the liver of beef steers. J. Animal Sci. 15: 1147-1153.

(2561) Erwin, E. S.; et al., 1957. Vitamin A-carotene deficiency affects serum protein and utilization of carotene by steers. Science 126: 702.

(2562) Erwin, E. S., and H. M. Page. 1958. Availability of vitamin A and carotene as influenced by soft phosphate. Jour. Animal Sci. 17(3): 662-666.

(2563) Erwin, E. S.; et al., 1959. The elevation of plasma carotenoids by vitamin A administration in the bovine. Jour. Dairy Sci. 42(1): 186-187.

(2564) Erwin, E. S.; et al., 1959. Relationship of Vitamin A and carotene to bovine serum proteins. Proc. Soc. Exptl. Biol. and Med. 100(2): 373-375.

(2565) Erwin, E. S., 1960. Comparative serum constituents in Brahman and Angus cows. J. Dairy Sci. 43: 98-99.

(2566) Erwin, E. S.; et al., 1959. Elevation of plasma carotenoids by vitamin A administration in the bovine. J. Dairy Sci. 42: 186-187.

(2567) Escapini, H., 1970. Eye manifestations of vitamin A deficiency. Boi. Ofic. Sanit. Panamer 68: 112-126.

(2568) Escarras, A., and J. Paillas., 1938. Production of a local hypervitaminosis A. Compt. Rend. Soc. Biol. 129: 312-314.

(2569) Escher, F., and H. P. Roost., 1951. Vitamin A-Intoxication with and excretion of streptomycin. Practica. Oto-Rhino-Laryngol. 13: 300-312.

(2570) Escher, F., and F. Rupp., 1953. Vitamin A-protective function in streptomycin intoxication. Acta. Oto-Laryng. 43: 311-321.

(2571) Escudero, A., and Herminia G. de Alvarez Herrero., 1944. Vitamin A-vitamin content of human milk. Pubs. Inst. Nacl. Nutricion (Buenos Aires)CNP 27: 171-172.

(2572) Escudero, A.; et al., 1944. Vitamin A-Influence of cooking upon the value of milk as a source of Ca. Rev. Asoc. Argentina Dietol. 2: 189-197.

(2573) Escudero, A., and P. Boso., 1935. Experimental calculi in avitaminosis A. Semana Med. 42(2155): 1283-1286.

(2574) Escudero, A., and P. Bosq., 1935. Influence of carotene on experimental calculosis in avitaminosis A. Semana Med. (Buenos Aires) 1: 1632.

(2575) Escudero, P., and E. Pierangeli., 1943. Influence of diet during pregnancy on the mineral and vitamin contents of colostrum. Rev. Asoc. Argentina Dietol. 1: 85-94.

(2576) Escudero, P., and J. E. Sola., 1943. Comparative study of human and cow's colostrum. Rev. Asoc. Argentina Dietol. 1 (3): 203-209.

(2577) Escudero, P., and B. Rothman., 1944. Vitamin A-The diet in institutions for school children in Argentina. II. Mineral and vitamin values of the food provided. III. The list of items in the diet, and meals. Rev. Asoc. Argentina Dietol. 2(5): 3-15.

(2578) Escudero, P., and L. Pertusi de Esquef. , 1944. Vitamin A-The feeding of infants during the first five days. Rev. Asoc. Argentina Dietol. 2: 107-113.

(2579) Escudero, P., 1944. Vitamin requirements of the infant during its first six months of life. Pubs. Inst. Nacl. Nutricion (Buenos Aires) Pubs. Cient. CPa 6: 109-117.

(2580) Escudero, P., and P. B. Landabure., 1945. Vitamin A-The possibility of living on meat and fats exclusively. Bol. Soc. Quim. Peru 11: 6-15.

(2581) Escudero, P.; et al., 1946. The relation between vitamin A and carotene in the blood and the biophotometric curve. Rev. Asoc. Argentina Dietol. 4: 282-288.

(2582) Escudero, P.; et al., 1947. Content of vitamin A and carotene of the blood of diabetic patients. Rev. Asoc. Argentina Dietol. 5: 261-266.

(2583) Esh, G. C., and T. S. Sutton., 1948. The nutrition of newborn dairy calf. II. Effect of dietary tryptophan on the urinary excretion of niacin and its metabolites by young dairy calves. J. Dairy Sci. 31: 909-912.

(2584) Esh, G. C., and T. S. Sutton., 1948. The effects of soya lecithin on the absorption, utilization, and storage of vitamin A and carotene in the white rat. J. Nutrition. 36:391-404.

(2585) Esh, G. C.; et al., 1948. The effect of soyaphosphatides on the absorption and utilization of vitamin A in dairy animals. Jour. Dairy Sci. 31(6): 461-478.

(2586) Esh, G. C., 1951. Utilization of vitamin A. Indian J. Pharm. 13: 131-134.

(2587) Esh, G. C. and Sukhamoy Bhattacharya., 1951. The utilization of vitamin A. I. Effect of feeding massive doses on liver storage. Indian J. Physiol. 5: 15-20.

(2588) Esh, G. C., and S. Bhattacharya., 1953. The utilization of vitamin A. III. Utilization of vitamin A palmitate. Indian J. Physiol. and Allied Sci. 7: 153-157.

(2589) Esh, G. C.; et al., 1960. Studies on the utilization of vitamin A. IV. Influence of the level of protein on the storage and utilization of vitamin A. Ann. Biochem. and Exptl. Med. 20(1): 15-20.

(2590) Esh, G. C.; et al., 1961. Effect of the source of dietary proteins on the storage and utilization of vitamin A. Sci. and Culture 27(2): 87-88.

(2591) Esh, G. C., and R. K. Bhattacharya., 1961. Dietary protein quality and vitamin A utilization. Proc. Symp. Proteins, Mysore, India 107-113.

(2592) Esh, G. C., and R. K. Bhattacharya., 1961. Interrelationship of dietary protein and vitamin A in metabolism. II. Influence of vitamin A on the levels of certain liver enzymes in rats. Ann. Biochem. and Exptl. Med. 21(6): 157-162.

(2593) Esh, G. C.; et al., 1961. Einflu durch die verschiedenen mit der Diat aufgenommenen Proteine auf Spelcherung und Verwertung von Vitamin A. Sci. and Cult. 27: 87.

(2594) Esh, G. C., and S. P. Bhattacharya., 1966. Interdependence of dietary protein and vitamins in metabolism. II. Interdependence of vitamin A, ascorbic acid and protein in metabolism. Indian J. Biochem 3(1): 48-54.

(2595) Esh, G. C., and S. P. Bhattacharya., 1966. Interdependence of dietary proteins and vitamins in metabolism: III. Influence of vitamin C on protein metabolism in growing guinea-pigs. Indian J. Biochem. 3(3): 196-202.

(2596) Esh, G. C., and S. P. Bhattacharya., 1967. Interdependence of dietary protein and vitamins in metabolism: V. Relative influence of vitamin A and ascorbic acid on protein depletion and repletion in rats. Indian J. Biochem. 4(2): 114-117.

(2597) Esselen, W. B., Jr., and C. R. Fellers. 1939. Vitamin A - The nutritive value of dried tomato pomace. Poultry Sci. 18: 45-47.

(2598) Establier, R.; 1963. Fat and vitamin A contents of the pyloric caeca of the tuna, Thunnus thynnus (L.) from Barbate in food technology. Invest. Pesquera 23: 115-124.

(2599) Estill, H. W., und E. V. McCollum., 1927. Die Isolierung eines Stoffes aus Olen, der die Zerstorung von Vitamin A durch Ferrosulfat verhindert. Journ. Biol. Chemistry 75: 157-162.

(2600) Ethridge, G. and H. B. Burton., 1934. Vitamin A content of home-canned Oklahoma apricots. Proc. Oklahoma Acad. Sci. 14: 57.

(2601) Etingof, R. N., and S. A. Shukolyukov., 1963. Effect of Vitamin A on swelling and on oxidative phosphorylation in rat liver mitochondria. Vopr. Med. Khim. 9(5): 535-537.

(2602) Etingof, R. N.; et al., 1964. Loss of sodium and potassium ions from outer members of retinal photoreceptors under the action of light and vitamin A. Dokl. Akad. Nauk. SSSR 156(4): 979-981.

(2603) Etingof, R. N.; et al., 1965. On the influence of illumination and vitamin A on the structure of the external segments of the rods of the retina. An electron microscopic study. Dokl. Adad. Nauk, SSSR. 164(3): 681-683.

(2604) Etingol, R. N., 1966. Vitamin A- Biochemistry of light reception. Pervichnye Protsessy Retseptornykh Elem. Organov. Chuvstv. Dokl. Vses. Simp., 1st 1965: 33-46.

(2605) Eufinger, H. and J. Gottlieb., 1933. Vitamin A-Coefficients of the thyroxine effect in biological experiments. Klin. Wochschr. 12: 1397-1402.

(2606) Eusebio, E. C., and J. G. Palad., 1966. Vitamin A content of Philippine food. Philippine J. Sci. 95(2):199-207.

(2607) Eusterman, G. B., and H. L. Wilbur., 1932. Vitamin A-clinical features of deficiency. J. American. Med, Asso.

(2608) Eveleth, D. F.; et al, 1948. Urinary calculi of lambs. North Dakota Agric. Expt. Sta. Bimo. Bull. 10(5): 149-157

(2609) Evans, H. M., 1928. The effects of inadequate vitamin A on the sexual physiology of the female. Jour. Biol. Chem. 77(2): 651-654.

(2610) Evans, P., 1953. Vitamine und Kinderkrankheiten. Die auf Mangel an den Vitaminen A. Guy's Hospital Gaz. 67: 62-71.

(2611) Evans, H. M. and S. Lepkovsky. 1931. Vitamin A-beneficial effects of fat in high sucrose diets when requirements for antineuritic vitamin B and fatsoluble vitamin are fully satisfied. J. Biol. Chem. 92: 615-622.

(2612) Evans, H. M. 1932. Testicular degeneration due to inadequate vitamin A in cases where E is adequate. Amer. Jour. Physiol. 99(2): 477-496.

(2613) Evans, W. H. 1939. Vitamin A-Vitamins in ophthalmology and otolaryngology. Eye, Ear, Nose, Throat Monthly. 18: 299-304.

(2614) Evers, N. 1929. Permanence of vitamin A in cod-liver oil as shown by the color test. Quart. J. Pharm. Pharmacol. 2: 556-565.

(2615) Evers, N. and W. Smith. 1933. Vitamin A-Analytical classification of the fish-liver oils. Quart J. Pharm. Pharmacol. 6: 329-337.

(2616) Evers, N. 1934. Vitamin A-determination. Analyst. 59: 82-85.

(2617) Evers, N. and W. Smith. 1934. Analytical classification of the fish-liver oils. IV. Spectrographic examination of fish-liver oils for vitamin A. V. Fish-liver oils. Quart. J. Pharm. Pharmacol. 7: 476-482.

(2618) Evers, N. and W. Smith. 1935. Vitamin A-The characters of halibut-liver oils. Pharm. J. 134: 417.

(2619) Ewing, D. T. ; et al. 1954. Spectrophotometric determination of vitamins D in the presence of vitamin A. Anal. Chem. 26: 1406-1409.

(2620) Ewing, D. T. ; et al. 1953. Bestimmung von Vitamin A in Gegenwart von Tocopherolen. Analytic. Chem. 25: 599-604.

(2621) Ezickson, W. J. and J. B. Feldman. 1937. Signs of vitamin A deficiency in the eye correlated with urinary lithiasis. J. Am. Med. Assoc. 109: 1706-1712.

(2622) Ezickson, W. J. 1938. Anemia. Its occurrence in renal lithiasis and relationship to vitamin A deficiency. A clinical study of seventy-five patients. Urol. Cutaneous Rev. 42: 820-824.

(2623) Ezickson, W. J. and J. B. Feldman. 1939. Further studies of vitamin A deficiency in individuals with urinary lithiasis. A report of further clinical studies and investigations on thirty-six patients. Urol. Cutaneous Rev. 42: 302-304.

(2624) Faber, K. 1938. Vitamin A-Tuberculosis and nutrition. Acta Tuberc. Scand. 12(4): 287-335.

(2625) Faberi, M. e G. Sandicchi. 1931. Color reactions of the lipid-soluble vitamin A. Arch. Ist. Biochim. Ital. 3(3): 247-262.

(2626) Fabiani, G. and P. Grellet. 1952. Vitamin A and experimental malaria from Plasmodium berghei infection in the white rat. Compt. Rend. Soc. Biol. 146: 441-444.

(2627) Fabris, C. and G. Bruscagnin. 1967. Effects of high doses of vitamin A on thyroid activity. Radioisotopic and clinical study. G. Veneto Sci. Med. 22(11-12): 411-424.

(2628) Fachini, G. 1942. Vitamin A-The nutritive value of olive oil and of seed oils. Chem. Zentr. 22(3): 13-14.

(2629) Fairbanks, B. W. 1940. Vitamin A. Methods of assay and occurrence in foods. North Am. Veterinarian. 21: 165-167.

(2630) Faitel'berg, R. O. and L. A. Semenguk. 1966. Vitamin A-Absorption by the gastrointestinal tract during development. Vedushchie Probl. Vozrastnoi. Biokhim., Tr. Vses. Simp., Kharkov. 373-379.

(2631) Falconer, E. H. 1926. Blood counts in vitamin-A deficiency disease with especial reference to the platelets. Amer. Jour. Physiol. 76(1): 145-150.

(2632) Famiani, V. and E. Serianni. 1936. Vitamin A-in wine and its pigment. Probl. Aliment. 6: 19-27.

(2633) Famiani, V. 1938. Vitamin A-content of olives preserved in brine. Probl. Aliment. 2: 73-76.

(2634) Fandeev, L. I. 1949. Vitamin A-Unusual skin lesions in a pellagra epidemic. Vestnik Venerol. i Dermatol. 2: 22-26.

(2635) Fang, H. S. ; et al. 1960. Combined effect of vitamins A and E on dark adaptation in man. Amer. J. Optom. 37: 93-98.

(2636) Farcot, A. 1959. Vitamin A and the premenstrual syndrome. Maroc. Med. 38: 1227-1228.

(2637) Farina, A. 1939. Behavior of carotene and vitamin A in blood in dermatoses. Gior. Di. Med. Mil. 87: 853-863.

(2638) Farmand, H. 1960. Vitamin A-Peripheral metabolism of thyroxin in the rat with hypervitaminosis A. C. R. Acad. Sci. 250: 3055-3057.

(2639) Farmer, F. A. and M. S. McCready. 1945. Vitamin A-A nutrition survey in Ste. Anne de Bellevue, Quebec. Canadian Jour. Publ. Health. 36(7): 276-284.

(2640) Farooquee, M. A. 1963. Vitamin A in some foods supplied to the defence forces and its behavior during storage. II. Ghee milk (Pakistan). Pakistan Jour. Sci. 15(3): 111-114.

(2641) Farooque, M. A. 1963. Vitamin A in some foods supplied to the defense forces and its behavior during storage. IV. Banaspati ghee (vitaminized). Pakistan J. Sci. 15(5): 201-203.

(2642) Farooquee, M. A. and A. A. Siddiqui. 1969. Prevention of rancidity and consequent loss of vitamin A in vanaspati. I. Rancidity. Pakistan Journal of Medical Research 8(1): 22-41.

(2643) Farrankop, H. 1945. The vitamin A content of Arizona butter. Arizona Agr. Exptl. Sta., Mimeographed Rept. 74: 2 pp.

(2644) Farrer, K. T. H. ; et al. 1949. Seasonal variations in the vitamin A content of Victorian butterfat. Australian Jour. Sci. Res. Ser. B. Biol. Sci. 2(4): 355-367.

(2645) Faruque, O. and D. M. Walker. 1970. Vitamin A and protein interrelationships in the milk-fed lamb. Brit. J. Nutr. 24(1): 11-22.

(2646) Fasal, P. 1944. Vitamin A-Clinical manifestations of vitamin deficiencies as observed in the Federated Malay States. Arch. Derm. and Syph. 50: 160-166.

(2647) Fasold, H. und H. Peters. 1933. Uber die Bedeutung des Ubertrittes des Vitamin A in die Milch. Munch. Med. Wschr. 80: 1427-1429.

(2648) Fasold, H. und E. R. Heidemann. 1933. Uber die Gelbfarbung der Milch thyreopriver Ziegen. Zeitschr. Ges. Exp. Med. 92(1/2): 53-56.

(2649) Fasold, H. and H. Peters. 1933. The antagonism between vitamin A and thyroxine. Z. Ges. Exptl. Med. 92: 57-62.

(2650) Fasold, H. 1934. Lipoid storage following large doses of vitamin A. Z. Ges. Exptl. Med. 94: 35-37.

(2651) Fasold, H. 1937. Vitamin A-action on ovary at puberty. Klin Wchnschr. 16: 90.

(2652) Fat'kin, Yu. N. 1967. Pathological processes of the Rumen of rats having vitamin A deficiency. Tr. Kaz. Nauch-issled Inst. Onkol. Radiol. 3: 374-380.

(2653) Fatterpekar, M. S., und G. B. Ramasarma. 1962. Die Stabilitat von Vitamin A in waβrigen Dispersionen. Indian J. Pharmacy. 24: 159-162.

(2654) Fazakerley, S., and J. Glover. 1957. Vitamin A-Provitamin activity of some possible intermediates in β-carotene metabolism. Biochem. J. 65: 38P-39P.

(2655) Fedorov, Yu. A., and T. I. Sapogovskaya. 1968. Biochemical indexes of the blood serum and mixed saliva in the induction and prevention of experimental caries in rats by the administration of vitamins A, B6, B15, C, and E. Stomatologiya (Moscow). 47(4): 27-32.

(2656) Fedotin, M. S. 1970. Vitamin A-Hypervitaminosis causing pseudotumor cerebri. J. American. Med. Asso. 212: 628.

(2657) Fedyurko, B. A. 1962. Carotene and vitamin A concentrations in animals having alimentary osteodystrophy. Zap. Voronezhsk. Sel'skokhoz. Inst. 17(2): 183-187.

(2658) Fegeler, F. ; et al. 1967. The influence of vitamin A and hydrocortisone on the RNA and protein metabolism of normal and psoriatic epidermis. Autoradiographic studies. Arch. Klin. Exp. Derm. 229: 102-109.

(2659) Fegeler, F. ; et al. 1967. On vitamin A and beta carotene serum levels in persons without or with skin diseases. Derm. Wschr. 153: 233-240.

(2660) Fegeler, F. ; et al. 1967. On the behavior of serum levels following loading with vitamin A and beta carotene in persons with healthy skin and in skin diseases. Derm. Wschr. 153: 441-447.

(2661) Fehlmann, H. A. , and C. F. Poe. 1940. The vitamin A content of palm-kernel oils. Stud. Ser. D. Phys. and Biol. Sci. 1(1): 29-35.

(2662) Feldman, M. H. ; et al. 1970. Vitamin A-Benign intracrantai hypertension associated with hypervitaminosis A. Arch. Neurol. (Chicago) 22: 1-7.

(2663) Feigenbaum, J. 1946. Vitamin A-antioxidant effect of commercial lecithin in fortified margarine. Nature, London. 157: 770-771.

(2664) Feinstein, L. 1945. Vitamin A-colorimetric determination. J. Biol. Chem. 159: 569-570.

(2665) Feldheim, W. 1955. Vitamin A-determination in blood according to Bisaz method. Schweiz. Med. Wchnschr. 85: 1242

(2666) Feldheim, W. 1956. Rapid determination of vitamin E in serum; combined method for determination of vitamins A and E and carotene in serum. Internat. Ztschr. Vitaminforsch. 27: 8-19.

(2667) Feldheim, W. 1961. Vitamin A-Erhaltung der Vitamine in Rohstoffen und Nahrungsmitteln. Ind. Obst-u. Gemuseverwert. 46: 260-266.

(2668) Feldheim, W. ; et al. 1962. Studies on vitamin metabolism in fowl. I. Vitamin A content in the serum and liver in relation to age in the cock. Int. Z. Vitaminforsch. 32: 157-163.

(2669) Feldheim, W., and M. Gazo. 1962. Studies on vitamin metabolism in fowl. II. Studies on the uptake of vitamin A in the liver in relation to age in the cock. Int. Z. Vitaminforsch. 32: 164-170.

(2670) Feldman, M. H. ; et al. 1970. Vitamin A-Benign intracranial hypertension associated with hypervitaminosis A. Arch Neurol (Chicago). 22: 1-7.

(2671) Feldman, J. B. 1938. Vitamin A-use of photometer in detecting latent avitaminosis. Proc. Round Table, Nutrition & Pub. Health. 16: 63-81.

(2672) Feldman, J. B. 1939. Vitamin A-dark adaptation, night blindness and glaucoma. Arch. Ophth. 22: 595-607.

(2673) Feldman, J. B. 1950. Myopia, vitamin A and calcium. Am. J. Ophth. 33: 777-784.

(2674) Fell, H. B., and E. Mellanby. 1950. Effects of hyper-vitaminosis A on fetal mouse bones cultivated in vitro; preliminary communication. Brit. M.J. 2: 535-539.

*(2675) Fell, H. B., and E. Mellanby. 1952. Effect of hyper-vitaminosis A on embryonic limb bones cultivated in vitro. J. Physiol. 116: 320-349.

(2676) Fell, H. B. 1953. The effect of excess vitamin A on the differentiation of chick ectoderm in culture. Jour. Embryol. and Exptl. Morphol. 1(3): 287-288.

(2677) Fell, H. B., and E. Mellanby. 1953. Metaplasia produced in cultures of chick ectoderm by high vitamin A. J. Physiol. (London). 119: 470-488.

(2678) Fell, H. B. 1954. Effect of hormones and vitamin A on organ cultures. Ann. N.Y. Acad. Sci. 58: 1183-1187.

(2679) Fell, H. B., et al. 1954. Influence of excess vitamin A on sulfate metabolism of chick ectoderm grown in vitro. Brit. Med. J. 2: 611.

(2680) Fell, H. B. 1956. Effect of excess vitamin A on organized tissues cultivated in vitro. Brit. Med. Bull. 12: 35-37.

*(2681) Fell, H. B., et al. 1956. Influence of excess vitamin A on the sulphate metabolism of bone rudiments grown in vitro. Jour. Physiol. 134(1): 179-188.

(2682) Fell, H. B. 1957. Effect of excess vitamin A on cultures of embryonic chicken skin explanted at different stages of differentiation. Proc. Roy. Soc. (London). B146: 242-256.

(2683) Fell, H. B. 1960. The effect of vitamin A on tissue structure. Proc. Nutr. Soc. 19: 50-54.

*(2684) Fell, H. B. and L. Thomas. 1960. Comparison of the effects of papain and vitamin A on cartilage. II. The effects on organ cultures of embryonic skeletal tissue. Exp. Med. 111: 719-744.

(2685) Fell, H. B. ; et al. 1961. Untersuchungen uber die Wirkung von Vitamin A. 1. Mitt. Stoffwechsel, Zusammensetzung und Abbau von Kukenknorpel in vitro. Biochem. J. 78: 11P.

*(2686) Fell, H. B., and L. Thomas. 1961. The influence of hydrocortisone on the action of excess vitamin A on limb bone rudiments in culture. J. Exp. Med. 114: 343-362.

(2687) Fell, H. B. 1961. The action of vitamin A on the ground substance of cartilage and bone. Colloq. Intern. Centre Natl. Rech. Sci. (Paris). 101: 85-94.

*(2688) Fell, H. B. ; et al. 1962. Studies on the mode of action of excess of vitamin A. Biochem. J. 83: 63-69.

(2689) Fell, H. B. 1962. The influence of hydrocortisone on the metaplastic action of vitamin A on the epidermis of embryonic chicken skin in organ culture. J. Embryol. Exp. Morph. 10: 389-409.

*(2690) Fell, H. B., and J. T. Dingle. 1963. Studies on the mode of action of excess of vitamin A. Biochem. J. 87: 403-408.

(2691) Fell, H. B. 1964. Vitamin A-Factors in the regulation of cell physiology in skeletal tissues. Bone Biodyn., Henry Ford Hosp., Intern. Symp., Detroit. 1963: 189-207.

*(2692) Fell, H. B. 1965. The effect of vitamin A on the breakdown and synthesis of intercellular material in skeletal tissue in organ culture. Proc. Nutr. Soc. 24: 166-170.

(2693) Feller, A. E. ; et al. 1942. Vitamin A-influence on certain immunologic reactions in man. J. Clin. Investigation. 21: 121-137.

(2694) Feller, A. E. ; et al. 1942. Studies on the influence of vitamin A and vitamin C on certain immunological reactions in man. J. Clin. Investigation. 21: 121-137.

(2695) Fellers, C. R., and P. D. Isham. 1933. Vitamins C and A in blueberries. J. Agr. Research. 47: 163-165.

(2696) Fellers, C. R., and G. G. Smith. 1934. Vitamins C and A in maple products. Proc. Amer. Soc. Hort. Sci. 31: 96-97.

(2697) Fellers, C. R. ; et al. 1934. Effect of fertilization, freezing, cooking and canning on the vitamin C and A content of asparagus. Proc. Amer. Soc. Hort. Sci. 31: 145-151.

(2698) Fellers, C. R.; and P. D. Isham. 1935. Vitamin A-Effect of storage, freezing and canning on the nutritive value of vegetable products. Vegetable Growers Assoc. America, Ann. Rept. 85-97.

(2699) Fellers, C. R. 1940. Effect of processing on the vitamin A (carotene) content of foods. Proc. First Food Conf. Inst. Food Technologists. 1940: 97-207.

(2700) Fellers, C. R.; and R. E. Buck. 1941. Retention of vitamins C and A in glass-packed foods. Food Research. 6: 135-141.

(2701) Fellinger, K.; and O. Hochstadt. 1936. Vitamin A-antithyroidal action. Wien. Klin. Wchnschr. 49: 1339-1340.

(2702) Fells, P. ; et al. 1970. Ocular complications of self-induced vitamin A deficiency. Trans. Ophthalmol. Soc. UK. 89: 221-228.

(2703) Felsch, P. 1963. Neue Ansichten zur Hautwirksamkeit des Vitamin A. Amer. Perfumer, Cosmet. 78(7): 15-17.

(2704) Fenech, G. ; et al. 1956/57. Vitamin A-Einfluβeiniger Antioxydantien auf die Konservierung des Vitamingehaltes in Leberol von Hexanchus griseus. Atti. Soc. Peloritana Sci. Fisiche Mat. Natur. 3: 419-430.

(2705) Fenton, P. F. ; et al. 1949. Chronic vitamin A deficiency in 3 inbred strains of mice. Fed. Proc. 8(1): 382.

(2706) Ferenc, S., and K. Sandor. 1956. Effect of pregnancy on calcium, inorganic phosphorus, carotene, and vitamin A content of blood serum in cows. Allattenyesztes. 5: 117-127.

(2707) Ferguson, H. P., and E. W. McHenry. 1944. Vitamin A - A nutrition survey in East York Township. III. Repetition of dietary studies after 2 years. Can. J. Public Health 35: 241-245.

(2708) Ferm, V. H. 1965. Vitamin A-The rapid detection of teratogenic activity. Lab. Invest. 14: 1500-1505.

*(2709) Ferm, V. H. 1967. Potentiation of the teratogenic effect of vitamin A with exposure to low environmental temperature. Life Sci. 6: 493-497.

*(2710) Ferm, V. H. 1969. Vitamin A-Conjoined twinning in mammalian teratology. Arch. Environ. Health. 19(3): 353-357.

(2711) Fernado, S. D. A. 1964. Histological observations on the ears of vitamin A deficient cats. Ceylon Veterinary J. 12(1/2): 2-4.

(2712) Fernandez, F. M. 1943. Vitamin A-hypotensive action. Vida nueva. 52: 259-263.

(2713) Fernandez, N. A. 1969. Vitamin A-Nutrition survey of two rural Puerto Rican areas before and after a community improvement program. Amer. J. Clin. Nutr. 22(12): 1639-1651.

(2714) Fernando, P. B., and P. K. Rajasuriya. 1946. Vitamin A - A study of the nutritional status of the children admitted to the Lady Ridgeway Hospital for Children, Colomb. Indian Jour. Pediatrics. 13(51): 69-95.

(2715) Feroci, M. ; et al. 1969. Gas chromatographic determination of vitamin F and vitamin E in combination with vitamin A and with various components in pharmaceutical preparations. Boll. Chimicofarm. 108: 767-776.

(2716) Ferola, R. ; et al. 1964. Blood carotene and blood vitamin A level in infants fed with milks having various lipid contents combined with carrot powder. Pediatria (Napoli). 72: 1108-1120.

(2717) Ferrando, R. 1950. Der Einflußvon Vitamin A auf die Glucuronsaurepaarung bei der mit Natriumbenzoat vergifteten Ratte. Mit der Diat, die Vitamin-A(I)-frei war, erhielten Ratten 2% Na-Benzoat. C. R. Hebd. Seances Acad. Sci. 231: 1264-1265.

(2718) Ferrando, R. 1950. Vitamin A-influence of excretion of benzoylglucuronic acid in rat poisoned with sodium benzoate. Compt. Rend. Acad. Sc. 231: 1264-1266.

(2719) Ferrando, R. 1954. Hypotheses concerning the possible relation between X-disease, the phenomena of detoxication, and vitamin A. Bull. Soc. Chim. Biol. 36: 1245-1247.

(2720) Ferrando, R. ; et al. 1956. Der Vitamin-A-Gehalt des Serums und die Maulund Klauenseucheimpfung. C. R. Hebd. Seances Acad. Sci. 242: 3143-3145.

(2721) Ferrando, R. 1962. Feeding carotenoid pigments with vitamin A activity to intensify chicken egg yolk color. Rec. Med. Vet. Ecole Alfort. 138(7): 547-563.

(2722) Ferrando, R. ; et al. 1969. Evolution of the rate of vitamin A in the colostrum of cows. Practical consequences. Rec. Med. Vet. Ecol. Alfort. 145(8): 815-820.

(2723) Ferrara, E. 1935. Presence of vitamin A in Bioplastin Serono. Rass. Clin. Terap. Sci. Affini. 34: 183-189.

(2724) Ferrari, C. and S. Cerri. 1955. Associated vitamins A and E in therapy of progressive deafness. Ateneo. Parmense. 26: 228-232.

(2725) Ferrer, O. 1942. Vitamin A-hypovitaminosis as nutritional problem during war and peace. Vida. Nueva. 49: 217-242.

(2726) Ferreri, G. 1957. Vitamins A and E in otosclerosis and in progressive deafness. Valsalva. 33: 207-213.

(2727) Ferrini, O. and G. C. Gambaro. 1954. Plasma-tissue water-saline equilibrium. Water and salt contents of plasma and tissues of treated rats. I. Vitamin A-treated. Arch. "E. Maragliano" Patol. E. Clin. 9: 1091-1098.

(2728) Ferro-Luzzi, G. 1943. Vitamin A-Avitaminosis in Eritrea. Trop. Dis. Bull. 40: 854-856.

(2729) Fesyun, A. P. 1964. Vitamin A-Milk composition of Jersey inbred cows on the "Gorkii Leninskii farm." Vestn. Sel'skokhoz. Nauki, Vses. Akad. Sel'skokhoz. Nauk. 9(1): 71-77.

(2730) Fetter, D. and A. J. Carison. 1931. Vitamin A-of some margarines. Am. J. Physiol. 96: 257-264.

(2731) Fey, H. and S. Lindt. 1962. Pathogenesis of Escherichia coli septicemia in calves. III. Importance of vitamin A. Zentr. Veterinaermed. 9: 643-652.

*(2732) Fidge, N.H. et al. 1968. Vitamin A-Pathways of absorption of retinal and retinoic acid in the rat. J. Lipid Res. 9: 103-109.

(2733) Fidge, N.H. and DeWitt S. Goodman. 1968. Vitamin A-The enzymic reduction of retinal to retinol in rat intestine. J. Biol. Chem. 243(16): 4372-4379.

(2734) Fidge, N. H. et al. Vitamin A and carotenoids. The conversion of β-carotene into retinal in hog intestinal mucosa. Biochem. J. 114(4): 689-694.

(2735) Field, J. W. 1931. Vitamin A starvation among immigrant Indians in Malaya. Malayan Med. J. 6: 46-53.

(2736) Fierst, S. M. ; et al. 1958. An evaluation of the isotopic iodotriolein method: its correlation with vitamin A absorption. Gastroenterology. 35: 381-384.

(2737) Fieschi, A. and P. C. Curti. 1948. Vitamin A-Biopsy material in acute infective hepatitis. Gastroenterologia. 74: 1-42.

(2738) Fiessinger, N. and H. Torres. 1941. Carotene and vitamin A in circulating blood in course of hepatic diseases; effect of loading with vitamin A. Compt. Rend. Soc. De. Biol. 135: 636-637.

(2739) Fiessinger, N. ; et al. 1941. Vitamin A-vitamin in blood and hemeralopia in cirrhotic patients; effects of loading with vitamin A. Compt. Rend. Soc. De. Biol. 135: 697-698.

(2740) Figueira, F. 1969. Absorption of vitamin A by infants receiving fat-free or fat-containing dried skim milk formulas. Amer. J. Clin. Nutr. 22(5): 588-593.

(2741) Figuerira, F. ; et al. 1969. Absorption of vitamin A by infants receiving fat-free or fat-containing dried skim milk formulas. Amer. J. Clin. Nutr. 22(5): 588-593.

(2742) Figueroa, A. V. E. 1950. Vitamin A-Chemical analysis of the starfish. Rev. facultad. Farm. y Bioquim., Univ. Nacl. Mayor San Marcos. 12: 76-79.

(2743) Filho, E. 1943. Vitamin "A" and urinary calculi. Urol. and Cutan. Rev. 47: 292-294.

(2744) Filipo, D. and F. Navazio. 1954. Behavior of vitamin A, carotene, and vitamin E in subjects with atrophic rhinopharyngitis. Otorinolaringol. Ital. 22: 515-522.

(2745) Findlay, G. M. und R. Mackenzie. 1922. Vitamin A-Opsonine und vitaminarme Kostformen. Biochemical Journ. 16: 574-577.

(2746) Findlay, G. H. and L. W. Van Der Merwe. 1965. Epidermal vitamin A and sunburn in man. Brit. J. Dermatol. 77(12): 622-626.

(2747) Findrik, M. ; et al. 1964. The vitamin A requirements of fattening chickens kept under different conditions. Vet. Arhiv. 34: 123-128.

(2748) Fine, J. 1933. Vitamin A-in ox serum. Biochem. J. 27: 1498-1500.

(2749) Fine, J. 1934. Vitamin A-Uber den Einflu von Avitaminosis auf den Verlauf von Trypanosomeninfektion. J. Of. Hyg. 34: 154-156.

(2750) Finkbeiner, H. and A. Mex. 1957. Dependency of the vitamin A level on the menstrual cycle. Arch. Gynakol. 188: 546-555.

(2751) Finkelstein, M. H. 1932. Vitamin A-Effect of carotene on course of B. tuberculosis infection of mice fed on vitamin deficient diet. Proc. Soc. Exper. Biol. and Med. 29: 969-971.

(2752) Finkelstone, B. B. ; et al. 1936. Vitamin A-intramuscular injection of concentrates during pregnancy; preliminary report. Am. J. Obst. and Gynec. 32: 113-118.

(2753) Finks, A. J. und D. B. Jones. 1924. Vitamin A-Wachstumsfordernder Wert der Proteine der Palmkerne und der Vitamingehalt des Palmkernmehls. Journ. Agricult. Research. 25: 165-169.

(2754) Finn, D. B., 1931. Nutritive value of marine products. IV. A note on the vitamin A content of commercial pilchard oil. Contributions Can. Biol. and Fisheries (N.S.) 6: 355-363.

(2755) Finnocchi, F., and G. de Ritis., 1951. Vitamin A-modifications of trachebronchial mucosa in deficient animals. Ann. Ist. Carlo Forianini 13: 25-32.

(2756) Finucci, V., 1935. Vitamin A-inflammation and regeneration of cornea and healing of fractures under influence of hypervitaminosis; experimental study. Arch. Ital. di. Chir. 41: 480-492.

(2757) Finnucci, V., 1942. Vitamin A-Vitamins and kidney stones. Rass. clin. Terap. Sci. Affini 41: 15-22.

* (2758) Firschein, H. E., 1970. Collagen and mineral accretion rates in bone during vitamin A deficiency. Am. J. Physiol 219: 1183-1187.

(2759) Fischer, F. P., 1934. Vitamin A-Die reduzierenden Substanzen der Linse, Arch. Augenheilk. 108(4): 527-543.

(2760) Fischer, L., 1923. Vitamin A-Eine Studie uber Kinische Rachitis. Vergleich der Resultate nach Sonnenbelichtung mit Behandlung durch Lebertran oder einem aktiven Konzentrationsprodukt aus Lebertran. Jour. Metabol. Res. 4: 481-489.

(2761) Fischer, L. R.; etal., 1953. Vitamin A and carotenoids in some Mediterranean Crustacea with a note on the swarming of Meganyctlphanes. Bull. Inst. Oceanogr. (Monaco) 1021: 1-19.

(2762) Fishbein, M., 1938. Vitamin A-Neue Folgen von Abhandlungen uber Vitamine. J. Amer. Med. Assn. 110: 577-579.

(2763) Fishbein, F., 1939. Vitamin A-The vitamins. Introduction. A Symposium, Am. Med. Assoc., 7-13.

(2764) Fisher, H. J. 1931. Vitamin A-Report on colorimetric methods for vitamins. J. Assoc. Official Agr. Chem. 14: 350.

(2765) Fisher, J. Prochazka., 1955. Die Behandlung der Ichthyosis mit Vitamin A. Arch. Dermatologie Syphilis 199: 450-473.

(2766) Fisher, J. Prochazka., 1946. Untersuchungen uber Vitamin-A-Resorption bei Hautgesunden und Acnepatienten. Arch. Dermatologie Syphilis 199: 446-458.

(2767) Crustacea, I. M.; et al., 1952. Vitamin A and carotenoids in certain invertebrates. I. Marine Crustacea. J. Marine Biol. Assoc. United Kingdom. 31: 229-259.

(2768) Fisher, L. R.; 1952. Vitamin A in some marine animals. Congr. Intern. Biochim., Resumes Communs., 2e Congr., 217-218.

(2769) Fisher, L. R.; et al., Vitamin A and carotenoids in some Mediterranean crustaceans with a note on the swarming of Meganyctiphanes. Bull. Inst. Oceanog. No. 1021: 19 pp.

(2770) Fischer, L. R. ; et al., 1954. Vitamin A and carotenoids in certain invertebrates. II. Studies of seasonal variations in some marine Crustacea. Jour. Marine Biol. Assoc. United Kingdom 33(3): 589-612.

(2771) Fischer, L. R. ; et al., 1955. Vitamin A and carotenoids in certain invertebrates. III. Euphausiid crustaceans. J. Marine Biol. Assoc. United Kingdom 34: 81-100.

(2772) Fisher, L. R.; et al., 1956. Vitamin A und Carotinoide in gewissen Invertebraten. J. Marine Biol. Assoc. United Kingdom 35: 63-80.

(2773) Fisher, L. R.; et al., 1956. Vitamin A and carotenoids in certain invertebrates. IV. Mollusca: Loricata, Lamellibranchiata, and Gastropoda. Jour. Marine Biol. Assoc. United Kingdom 35(1): 41-61.

(2774) Fisher, L. R.; et al., 1957. Vitamin A and carotenoids in certain invertebrates. VI. Crustacea: Penaeidea. J. Marine Biol. Assoc. United Kingdom 36: 501-507.

(2775) Fisher, L. R.; et al., 1957. Vitamin A isomers in some eucaridan crustacea. Proc. Roy. Soc. (London) B147:200-217.

(2776) Fisher, L. R., and S. K. Kon., 1959. Vitamin A in the invertebrates. Biol. Revs. Cambridge Phil. Soc. 34: 1-36.

(2777) Fisher, L. R., 1962. Das Vitamin-A-Problem bei der Untersuchung von Meerestieren. Proc. Roy. Soc. London, Ser. A. 256: 359-365.

(2778) Fisher, L. R., 1962. Vitamin A and fat in the herring and in its food. 35 P. 28 cm Scotland Dept. of Agriculture and Fisheries Marine research. No. 4. SH 259 A 246.

(2779) Fisher, L. R., 1965. Vitamin A, Carotenoids and total lipids in the livers of some elasmobranchs. Mar. Res. Ser. Scot. Home Dep. 1964(2): 1-18.

(2780) Fisher, L. R.; et al., 1964. Vitamin A und Carotinoide bei bestimmten Invertebraten. J. Marine Biol. Assoc. United Kingdom 44: 685-692.

(2781) Fisher, L. R., and Z. D. Hosking., 1966. Vitamin A and fat in the herring of the Blackwater estuary. Some Contemp. Stud. Mar. Sci. 297-311.

(2782) Fisher, O. E., 1938. Vitamin A-severe night blindness due to deficiency. Brit. Med. J. 2: 944.

(2783) Fisher, W. T.; et al., 1964. Simplified assay of vitamins A and E in mixtures. J. Pharm. Sci. 53: 294-298.

(2784) Fiske, S.; et al., 1962. Beneficial effects of vitamin A, niacin and riboflavin in the management of certain types of vascular conditions. Med. Times 90: 1055-1064.

(2785) Fitzgerald, G. A., and C. R. Fellers. 1938. Carotene and ascorbic acid content of fresh market and commercially frozen fruits and vegetables. Food Res. 3(1/2): 109-120.

(2786) Fitz-James, P. C., 1968. The response of growing protoplasts to various doses of vitamins A and E. In: Microbial protoplasis, spheroplasis and L-forms. Williams and Wilkins Company; Baltimore, Md. 239-247.

(2787) Fitzgerald, O.; et al., 1961. Serum studies in man after administration of vitamin A acetate and vitamin A alcohol. I. In normal subjects. Gut 2(3): 263-266.

(2788) Fitzgerald, O.; et al., 1962. Studies on the stability of vitamin A in the stomach and small intestine. Gut 3: 264-266.

(2789) Fitzgerald, O.; et al., 1962. Serum studies in man after administration of vitamin A acetate and vitamin A alcohol. Gut 3: 74-79.

(2790) Fixsen, M. A. B., 1938. The vitamin content of human foods as affected by processes of cooking and canning (with tables). Nutrition Abstracts and Revs. 8: 281-307.

(2791) Fizaan, P. J. M., 1941. Vitamin A-hepatic cirrhosis associated with serious manifestations of deficiency: case. Nederl. Tijdschr. v. Geneesk. 85: 4338-4339.

(2792) Fizhenko, N. V., and M. P. Sheherbakova., 1948. Vitamin A content in the blood of newborn children. Voprosy Pediat. i Okhrany Materinstva i Detstva 16: (5): 29-31.

(2793) Flamini, M., 1931. Vitamin A-in therapy of infectious diseases of childhood. Pediatria 39: 1282-1297.

(2794) Flax, L. J.; et al., 1942. Vitamin A-absorption and its relation to intestinal motility in fibrocystic disease of pancreas. J. Pediat. 21: 475-484.

(2795) Flegal, C. J., and P. J. Schaible. 1964. An evaluation of a fermentation beta-carotene product with respect to vitamin A activity (chick). Poultry Sci. 43(5): 1318-1319.

(2796) Fleisch, A. and A. Schnieper., 1939. Vitamin A-in sterilized and irradiated milk. 9: 330-338.

(2797) Fleisch, A., and J. Posternak., 1943. Vitamin A-relation to hemeralopia; results of examination of school children in Lausanne. Helvet. Physiol. et Pharmacol. Acta. 1: 23-31.

(2798) Fleischacker, A. and C. Kucera., 1937. Biologische Studien uber die Beziehung der Wirkung der Vitamine A und D und-von radioaktivem Wasser auf die Entwickling von Kuken. Sbornik Ceskoslov. Akad. Zemedelske 12: 320-326.

(2799) Fleischer, E.; et al., 1952. Vitamin A-metabolism in tuberculous patients. Beitr. Klin. Tuberk. 107: 23-28.

(2800) Fleischmann, W., and S. Kann., 1936. Vitamin A-relation in thyroid hormone. Wien. Klin. Wchnschr. 49: 1488-1489.

(2801) Fleischmann, W., and S. Kann., 1937. Vitamin A-effect of phenol derivatives in checking auto-oxidation; study on antagonism of vitamin and thyroxine. Biochem. Ztschr. 292:296-300.

(2802) Flesch, P., and M. Hunt. 1952. Vitamin A - Local depilatory action of some unsaturated compounds. Arch. Dermatol. Syphilol. 65: 261-269.

(2803) Flesch, P., 1953. The mode of action of vitamin A. J. Invest. Dermatol. 21: 421-434.

(2804) Flesch, P., 1953. Colorimetric method for determination of vitamin A and carotene by perchloric acid. Proc. Soc. Exper. Biol. and Med. 84: 148-149.

(2805) Fletcher, E. E., and R. H. Rigdon., 1949. Vitamin A-neurologic manifestations associated with deficiency in young ducks; clinical and pathologic study. Arch. Neurol. and Psychiat. 61: 199-209.

(2806) Fletcher, R. A., 1971. Effects of vitamin A deficiency on the pituitary-gonad axis of the California quail. Lophortyx californicus. J. Exp. Zool. 176-25-34.

(2807) Fleury, J., 1952. Vorubergehender ,, Hydrocephalus nach hoher Dosis Vitamin A und Vitamin $D_2$. Arch. Franc. Pediatrie 9: 1061-1062.

(2808) Flores, M. and Berta Garcia., 1960. Vitamin A-Der Ernahrungszustand von noch nicht schulpflichtigen Kindern in der Gemeinde Amatitlan in Guatemala. Brit. J. Nutrit. 14: 207-215.

(2809) Flores, M.; et al., 1969. Vitamin A content of food included in the Food Composition Table for use in Latin America. Arch. Latinoamer. Nutr. 19(3): 311-341.

(2810) Flynn, L. M., and A. G. Hogan., 1946. Vitamin A-Nutrients consumed by army students at the University of Missouri. J. Am. Dietetic Assoc. 22: 8-14.

(2811) Foldes, F., and G. Vajda., 1941. Vitamin A-effect on secretion of gastric juice in deficient hydrochloric acid production. Brit. Med. J. 1:317-318.

(2812) Foncin, R., and J. Masson., 1952. Effects of vitamin A on various hypophyso-infundibular function with special regard to sleep. 68: 175-178.

(2813) Fonnesbeck, P. V., and Linda D. Symons., 1967. Utilization of the carotene of hay by horses. J. Anim. Sci. 26(5): 1030-1038.

(2814) Fontan, A., 1965. Internal tibial hyperostosis. Possible eventual role of hypervitaminosis A. Arch. Franc. Pediat. 22: 117-118.

(2815) Foot, A. S. ; et al., 1939. Vitamin A-Pig-feeding experiments with cod liver oil. J. Agr. Sci. 29: 142-163.

(2816) Ford, C. A., 1959. Dietary and blood nutrient levels for a selected group of children as determined by dietary intakes and biochemical measurements of hemoglobin, ascorbic acid, vitamin A, and carotene. Dissertation Abstr. 20: 1008-1009. Mic. 59-2994.

(2817) Ford, J. E.; et al.; 1970. Influence of dissolved oxygen on the stability of vitamins in UHT milk. International Dairy Congress (18th Sydney) 1E: 183.

(2818) Forest, , and R. Wolff., Vitamin A-absence of early signs of deficiency in avitaminosis in infants. J. de Med. de Paris 52: 302-304.

(2819) Forjaz, P., 1949. Spectrophotometric determination of vitamin A. Anais Azevedos (Lisbon) 1: 106-111.

(2820) Forlano, A. J., 1959. The stability of vitamin A and its esters. Dissertation Absts. 20(6): 2032.

(2821) Forni, P. V.; et al., 1956. Vitamin A-Hypervitaminosis and tissue water content. Ipervitaminosi (Vitaminologia 11-13): 89-99.

(2822) L. Forsgren, L., 1969. Studies on the intestinal absorption of labelled fat-soluble vitamins (A. D, E, and K) via the thoracic-duct lymph in the absence of bile in man. Acta. Chir. Scand. Suppl. 399-401 .

(2823) Forssberg, A., 1933. Vitamin A-Beziehungen zwischen Immunhamolyse und Ernahrung bei der Ratte. Z. Immunitatsforsch. exp. Therap. 80: 16-27.

(2824) Forster, K. A., 1931. Vitamingehalt der Sauermilchpraparate Yoghurt, Kefir und Saya. Biochem. Zeitschr. 236(4/6): 276-297.

(2825) Fortner, J. G., and A. N. Kohen., 1954. Vitamin A-Experimental studies of gallstone formation. Surgery 36: 932-940.

(2826) Fortushnyi, V. A.; et al., 1965. The effect of antibiotics on the concentration of vitamins A and C in the animal organism. Veterinariya (Kiev. Urozhai) (3): 24-29.

(2827) Foss, J. O., and D. F. Eveleth., 1944. Vitamin A deficiency in the production of pregnancy disease of sheep. Vet. Med. 39(8): 313-315.

(2828) Fouad, M. T.; et al., 1967. High dietary vitamin A supplement in healthy and choryzic chickens. Indian J. Vet. Sci. Anim. Husb. 36(4): 232-236.

(2829) Fournier, P. L., and Y. Dupuis., 1962. Vitamin A-Indispensable exogenous factors for the utilization of calcium. Compt. Rend. 254: 3573-3575.

(2830) Fox, F. W., 1932. Vitamin A-vitamin content or livers of native mine labourers. South African Med. J. 6: 689-690.

(2831) Fox, F. W., 1933. Vitamin A-vitamin reserves in livers of native mine laborers, with special reference to their resistance to pneumonia. Lancet 1:953-955.

(2832) Fox, F. W., 1933. Vitamin A and infection; review of recent work. East African Med. J. 10: 190-214.

(2833) Fox, H. J., 1949. Absorption of unemulsified and emulsified vitamin A in sprue. J. Lab., and Clin. Med. 34: 1140-1144.

(2834) Fox, S. H., und A. Mueller., 1950. Der Einfluβ der Tocopherole auf die Vitamin-A-Bestimmung der U. S. P. XIV. Die Vitamin-A-Best. J. Amer. Pharmac. Assoc., Sci. Edit. 39: 621-623.

(2835) Foy, J. R., and K. Morgareidge., 1948. Biological assay of vitamin A. Anal. Chem. 20: 304-307.

(2836) Francavilla, A.; et al., 1965. Study of intestinal absorption in the small intestine. IV. Absorption of Vitamina A). Biochim Appl. 12(6): 211-216.

(2837) Franco, T., and S. Lino., 1955. Diet and cartilage. I. Effects of excess of vitamin A. Arch. Studio fisiopatol. e Clin. Ricambio 19: 61-68.

(2838) Francois, M. T.; et al., 1963. Detection of vitamin A in the oil of the avocado Persea gratissima Gaerth. C. R. Soc. Biol. (Paris) 157:1077-1079.

(2839) Frandsen, A. M., and H. Becks., 1962. The effect of hypo-vitaminosis A on bone healing and endochondral ossification in rats. Oral Surg. 15: 474-487.

(2840) Frandsen, A. M. 1963. Experimental investigations of socket healing and periodontal disease in rats. Effects of local roentgen irradiation. Effects of vitamin A deficiency. Acta. Odont. Scand. 21: Suppl. 37: 7-113.

(2841) Frandsen, A. M., 1963. Periodontal tissue changes in vitamin A deficient young rats. Acta Odont.Scand. 21: 19-34.

(2842) Frandsen, H., 1936. Vitamin A-hemeralopia as early criterion of avitaminosis and clinical symptoms and treatment of this disease. Bibilot. f. Laeger 128: 77-81.

(2843) Frank, M. 1934. Vitamin A - relation of lysozyme to avitaminosis. Monatschr. f. Klnderh. 60:345-349.

(2844) Frank, M., 1934. Vitamin A-hematology of avitaminosis. Monatschr. f. Kinderh. 60: 350-355.

(2845) Frank, M., 1935. Vitamin A-reduced resistance against infections in deficiency. Med. Klin. 31: 486-488.

(2846) Frank, M., 1937. Vitamin A-various experimental methods of controlling deficiency. Arch. f. Kinderh. 110: 91-99.

(2847) Franke, H., 1949. Vitamin A and ascorbic acid metabolism in peptic ulcer. Deutsche Ztschr. Verdauungskr. 9:235-238.

(2848) Franke, W., 1932. Vitamin A-Zur Autoxydation der ungesattiglen Fettsauren. II. Die Wirkung der Carotinoide. Hoppe-Seyler's Z. Physiol. Chem. 212: 234-255.

(2849) Frankel, E., 1933. Relationship between the growth of malignant tumors and vitamins in the diet. Bull. Soc. Sci. Hyg. Aliment. 22: 165.

(2850) Frankel, S., 1922. Vitamin A-Uber Vitamine. Pharm. Monatsh. 3: 17-18.

(2851) Franquin, J. C.; et al. 1970. Influence of vitamin A on the distribution of succinic dehydrogenase in oral epithelium of the white rat. J. Periodontol 41: 639-643.

(2852) Franquin, J. C.; et al., 1971. The acid phosphatase in the epithelium of the alveolar mucosa of the rat exposed to a deficiency and an excess of vitamin A. Schweiz Monatsschr. Zahnheilkd 81:363-371.

(2853) Franzke, C. I., 1955. Vitamin A-Probleme bei der Vitaminisierung und Farbung von Margarine. Chem. Techn. 7: 165-168.

(2854) Frape, David, L., 1958. The vitamin A requirement of the young pig. Dissertation Absts. 18(3): 732.

(2855) Frape, D. L.; et al., 1959. Thyroid function in the young pig and its relationship with vitamin A. Jour. Nutrition 68(3): 333-342.

(2856) Frape, D. L.; et al., 1959. Relation of vitamin A to sulfur-35 metabolism in the baby pig. J. Nutrition 68: 189-201.

(2857) Frape, D. L.; et al., 1959. Vitamin A requirement of the young pig. J. Nutrition 68: 173-187.

(2858) Frape, D. L.; et al., 1969. Liver weight and its nitrogen and vitamin A contents in piglets from sows fed two levels of protein and food. J. Agr. Sci. 73(Pt. 1): 33-40.

(2859) Fraps, G. S., 1931. Variations in vitamin A and chemical composition of corn. Texas Agr. Exptl. Sta., Bull. 422: 5-46.

(2860) Fraps, G. S., and R. Treichler., 1932. Quantitative variations in vitamin A content of butter fat. Indust. & Engin. Chem. 24: 1079-1081.

(2861) Fraps, G. S., and Ray Treichler., 1933. Losses of vitamin A in drying fresh raw carrots and sweetpotatoes and canned spinach. Jour. Agric. Res. 47(7): 539-541.

(2862) Fraps, G. S., and Ray Treichler., 1933. Vitamin A content of foods and feeds. Tex. Agr. Exptl. Sta., Bull. 447: 34 pp.

(2863) Fraps, G. S., and R. Treichler., 1933. Vitamin A-effect of storage on vitamin in dried foods. Indust. and Engin. Chem. 25: 465-466.

(2864) Fraps, G. S., and A. R. Kemmerer., 1938. Relation of the spectro-vitamin A and carotene content of butter to its vitamin A potency measured by biological methods. Texas Agr. Exptl. Sta., Bull. 560: 3-21.

(2865) Fraps, G. S.; et al., 1940. Estimation of units of vitamin D and vitamin A in fish liver oils and their concentrates. Jour Assoc. Offic. Agric. Chem. 23(2): 417-422.

(2866) Fraps, G. S.; et al., 1941. Relation of chemical analyses of butter to its vitamin A potency. J. Assoc. Official Agr. Chem. 24: 731-735.

(2867) Fraps, G. S.; et al., 1942. Relation of chemical analyses of liver to its vitamin A potency. Jour. Assoc. Offic. Agric. Chem. 25(2): 529-532.

(2868) Fraps, G. S., and W. W. Meinke., 1943. Biological value of spectro vitamin A in liver, Jour. Assoc. Offic. Agric. Chem. 26(3): 399-404.

(2869) Fraps, G. S., and A. R. Kemmerer., 1943. Carotene and vitamin A in commercial butter. Jour. Assoc. Offic. Agric. Chem. 26(1): 158-164.

(2870) Fraps, G. S., and W. W. Meinke., 1945. Relative values of carotenes in foods as measured by storage of ;vitamin A in livers of rats. Food Research 10: 187-196.

(2871) Fraps, G. S., 1946. Effect of bulk, casein and fat in the ration on the utilization of carotenes by white rats. Arch. Biochem. 10: 485-489.

(2872) Fraser, F. Clarke., 1949. Effect of vitamin A on hereditary hyperkeratosis in the mouse. Can. J. Research 27D: 179-185.

(2873) Fraser, E. H., and A. T. Cameron., 1929. Use of vitamins A and D and sodium iodide in pre-operative treatment of Graves disease. Canad. Med. Amer. J. 21:153-155.

(2874) Fraser, R. J., 1937. Human vitamin requirements. (Vitamin A). Am. Druggist Nov. 26. Dec. 1937, 28.

(2875) Frazier, C. N., and C. K. Hu., 1931. Vitamin A-cutaneous lesions associated with deficiency in man. Arch. Int. Med. 48: 507-514.

(2876) Frazier, C. N., and C. K. Hu., 1936. Vitamin A-nature and distribution according to age of cutaneous manifestations of deficiency; 207 cases. Arch. Dermat., and Syph. 33: 825-852.

(2877) Frazier, C. N., and H. C. Li., 1938. Vitamin A-deficiency in man; resolution of cutaneous lesions following parenteral administration of carotene. Chinese Med. J. 54: 301-314.

(2878) Frazier, C. N., and S. N. Tsao., 1941. Vitamin A-association of neuromuscular symptoms and cutaneous lesions in deficiency; discussion of etiologic relationship. Chinese Med. J. 59: 399-415.

(2879) Frazier, C. N.; et al., 1943. Variations in the cutaneous manifestations of vitamin A deficiency from infancy to puberty. Arch. Derm. Syph. 48(1): 1-14.

(2880) Frazier, C. N., and W. L. Marmelszadt., 1948. Vitamin A deficiency and skin in retrospect; historical search into nosologic antecedents. Bull. Hist. Med. 22: 766-795.

(2881) Freeman, S. E., and S. W. Gloyer., 1951. Solvent extraction of vitamin A from fish-liver oils. U. S. 2,573, 897.

(2882) French Patent., 1938. Fr. 833, 984. Products rich in vitamins.

(2883) French Patent., 1952. Fr. 1 000 235. Specialites Allmentaires Bourguignonnes.

(2884) French Patent., 1951. Fr. 1 056 114. N. V. Philips' Gloeilampenfabrieken.

(2885) French Patent., 1960. Fr. 1 266 960. Stabilisierung von Vitamin A.

(2886) French Patent. 1960. (Med.) No. 667. Stabile Vitamin-A-Ester.

(2887) French Patent. 1960. (Med.) No. 380. Vitamin A-Arzneimittel.

(2888) French Patent. 1963. 1 345-529. Stabilisierung von Vitamin A.

(2889) French Patent. 1959. 1 235 134. Vitamin A-Stabilisieren von organischen Stoffen gegen Oxydation.

(2890) French, M. H. 1943. The carotene and vitamin A values of colostrum from high-grade cows. East African Agr. J. 8: 174-175.

(2891) Frenk, E. 1966. Keratodermal state with lowered serum level of vitamin A and hypercarotinemia. Dermatologica (Basel). 132: 96-98.

(2892) Frenning, H. 1958. Wirkt Vitamin A krebserzeugend? Svensk Farmac. Tidskr. 62: 858-860.

(2893) Freschi, A. and P. C. Curti. 1948. Vitamin A-Liver biopsies in acute infectious hepatitis. Gastroenterologia. 74: 1-41.

(2894) Freudenthal, P. 1927. Rachitisme experimental. Alterations anatomo-pathologiques causees par l'avitaminose A. (Patho-anatomic changes produced by vitamin A deficiency. Compt. Rend. Soc. Biol. 97(29): 1263-1266.

(2895) Freudenthal, P. 1927. Vitamin A-Experimentelle Rachitis. Atiologie der Rachitis. Compt. Rend. Soc. Biologie. 97: 1255-1258.

(2896) Freudenthal, P. 1927. Experimental rickets. Importance of an adequate salt content in a diet in which the vitamine A content is varied. Compt. Rend. Soc. Biol. 97(29): 1259-1262.

(2897) Frey, C. N. ; et al. 1936. Vitamin A-Physiologie, Herstellung und Verwendung von Hefe. Ind. Engng. Chem. 28: 879-884.

(2898) Frey, C. N. ; et al. 1936. Die Wirkung von aktiver Sojabohne auf Vitamin A. Ind. Engng. Chem. 28: 1254.

(2899) Frey, J. R. and M. A. Schoch. 1952. Vitamin A-in therapeutic studies of psoraisis; with special refrence to A hypervitaminosis. Dermatoligca. 104: 80-86.

(2900) Frey, P. R. and R. Jensen. 1946. Depletion of hepatic reserves of vitamin A and carotene in cattle. Jour. Nutrition. 32(2): 133-141.

(2901) Frey, P. R. and R. Jensen. 1947. Depletion of vitamin A reserves in the livers of cattle. Science. 105: 313.

(2902) Frey, P. R. ; et al. 1947. Vitamin A intake in cattle in relation to hepatic stores and blood levels. Jour. Nutrition. 34(4): 421-430.

(2903) Freytag, F. C. and H. G. Smith. 1933. Unsaponifiable lipids of beef liver; vitamins A and E; antioxygens. J. Biol. Chem. 100: 319-322.

(2904) Fricker, A. 1964. Vitamin A-Red perch and soybean oils. Z. Ernaehrungwiss. 5: 31-39.

(2905) Friderichsen, C. and C. Edmund. 1936. Vitamin A-hypo-vitaminosis; new method for quantitative study of resorption of various vitamin preparations in infants. Hospitalstid. 79: 1081-1102.

(2906) Friderichsen, C. 1936. Hypovitaminosis A. I. Quantitative investigations on the resorption of vitamin A in a case of celiac disease. Acta Paediat. 18: 377-391.

(2907) Friderichsen, C. and C. Edmund. 1936. Vitamin A-hypo-vitaminosis; clinical experiments on vitamin balance during first years of life in children fed on various diets. Hospitalstid. 79: 1253-1273.

(2908) Friderichsen, C. and C. Edmund. 1937. Vitamin A-hypo-vitaminosis; new method for testing resorption of vitamin from medicaments. Am. J. Dis. Child. 53: 89-109.

(2909) Friderichsen, C. and T. K. With. 1939. Vitamin A-content of human milk in carotenoids and vitamin, especially in relation to diet. Ann. Paediat. 153: 113-143.

(2910) Fridericia, L. S. 1924. Inactivating action of some fats on vitamin A in other fats. J. Biol. Chem. 62: 471-485.

(2911) Fridericia, L. S. and E. Holm. 1925. Experimental contribution to study of relation between night blindness and malnutrition; influence of deficiency of fat-soluble A-vitamin in diet on visual purple in eyes of rats. Am. J. Physiol. 73: 63-78.

(2912) Fridericia, L. S. und S. V. Gudjonsson. 1927. Vitamin A-Versuche uber das Verhaltnis zwischen der Fahigkeit, photographische Platten zu schwarzen, und dem A-Vitamingehalt bei Lebertran und Schweinefett. Bibliotek for Laeger

(2913) Fridericia, L. S. und S. V. Gudjonsson. 1936. Die Wirkung von Vitamin-A-Mangel auf die Wachstumsgeschwindigkeit der Schneidezahne von Albinoratten. Kong. Dansk. Vidensk. Selsk., Biol. Medd. 13(2)

(2914) Fridericia, L. S. ; et al. 1940. Vitamin A-stomach lesions in rats kept on deficient diets. Am. J. Cancer. 39: 61-69.

(2915) Fried, C. T. and M. J. H. Grand. 1950. Vitamin A-Hypervitaminosis A. Am. J. Dis. Child. 79: 475-486.

(2916) Friedenwald, J. S. and W. Buschke. 1944. Vitamin A-Mitotic and wound healing activities of the corneal epithelium. Arch. Ophthalmol. 32(5): 410-413.

(2917) Friedenwald, J. S. ; et al. 1945. Vitamin A-mitotic activity and wound healing in corneal epithelium of deficient rats. J. Nutrition. 29: 299-308.

(2918) Friederichsen, C. 1936. Quantitative Untersuchungen uber die Resorption von Vitamin A in einem Falle von Coeliakie. Untersuchungen uber A-Hypovitaminose. Acta Paediatrica. 18: 377-391.

(2919) Friedman, I. et al. 1969. Vitamin A-Studies on lysosomes in rat heart cell cultures: I. The effect of lysosomal labilizers. Brit. J. Exp. Pathol. 50(3): 213-218.

(2920) Friedman, L. 1960. Determination of vitamin A in oleomargarine. J. Assoc. Offic. Agr. Chemists. 43: 6-14.

(2921) Friedman, L. 1960. Vitamin A in Oleomargarine. J. Assoc. Off. Agric. Chemists. 43: 6-14.

(2922) Friend, C. J. ; et al. 1961. The effect of dietary protein deficiency on transport of vitamin A in the blood and its storage in the liver. Brit. J. Nutr. 15: 231-240.

(2923) Friend, D. W. and E. W. Crampton. 1961. Vitamin A - The adverse effect of raw whale liver on the breeding performance of female mink. J. Nutr. 73(3): 317-320.

*(2924) Frier, H. I. et al. 1970. Vitamin A-Rates of formation and absorption of cerebrospinal fluid in mild chronic bovine hypervitaminosis A. J. Dairy. Sci. 53: 1051-1057.

(2925) Friesecke, H. und M. Kirchgeßner. 1964. Futterungseinflusse auf die Vitamin A-Wirksamkeit der Kuhmilch. Bayer, Landwirtsch. Jb. 41: 440-445.

(2926) Frigerio, N. A. 1962. Vitamin A-Entfernung von SbOCl-Filmen aus Kuvetten nach Carr-Price-Bestimmungen. Chemist-Analyst. 51: 82-83.

(2927) Friis-Hansen, B. and F. S. McCullough. 1962. Vitamin A deficiency in African children in Northern Rhodesia. J. Pediat. 60: 114-121.

(2928) Friis-Skottel, E. 1936. Vitamin A-ocular adaptation in student nurses at Rigshospital in relation to vitamin content of their diet. Ugesk. F. Laeger. 98: 680-682.

(2929) Frimmer, M. 1968. Vitamin A-Liberation of lysosomal enzymes from the isolated, perfused rat liver. Stoffwechsel Isol. Perfundierten Leber, Konf. Ges. Biol. Chem., 3rd 1967. 67-76.

(2930) Frimmer, M. ; et al. 1968. Acute effects of high vitamin A (alcohol, aldehyde, and acid) doses on the stability of lysosomes in perfused rat liver. Int. Z. Vitaminforsch. 38(5): 454-458.

(2931) Fritzsche, K. 1950. Vitamin A-Wattle disease in the hen (chronic chicken cholera). Berlin. u. Munch. Tierarztl. Wochschr. 1950: 153.

(2932) Frohring, W. O. und J. Wyeno. 1934. Der Bedarf an Carotin und Vitamin A fur weiße Leghornhuhner. J. Nutrit. 8: 463-476.

(2933) Frohring, W. O. 1935. Der Vitamin-A-Bedarf wachsender junger Hunde. Proc. Soc. Exp. Biol. Med. 33: 280-282.

(2934) Frolich, A. and S. Thomke. 1968. Experiments with two calcium levels and varied supply of vitamins A and D in pig feed. Lantbrukshogsk. Medd. Ser. A. 98: 3-8.

(2935) Fromel, W. 1957. Die Nachprufung der Gehalte an den Vitaminen A und D in Vormischungen. 2. Mitt. Die Nachprufung der Praparate Protector und Ramikal. Landwirtsch. Forsch. 10: 251-254.

(2936) Fromel, W. 1957. A method for testing the contents of vitamins A and D in premixings. Landwirtsch. Forsch. 10: 118-123.

(2937) Fromel, W. 1958. Die Nachprufung der Gehalte an den Vitaminen A u. D in Vormischung. Landwirtsch. Forsch. 11: 69-72.

(2938) Fronimopoulos, J. 1940. Vitamin A-hypovitaminosis A and C in tuberculous eye diseases. Klin. Monatsbl. F. Augenh. 105: 707-719.

(2939) Fronimopoulos, J. 1940. Effect of vitamin A deficiency on origin of recurrent seasonal keratoconjunctivitis allergica (scrofulosa). Klin. Monatsbl. Augenheilk. 104: 1-37.

(2940) Fronimopoulos, J. 1940. Vitamin A-question of deficiency as etiologic factor in recurrent seasonal keratoconjunctivitis allergica (scrophulosa). Klin. Monatsbl. F. Augenh. 104: 1-39.

(2941) Frontali, G. 1926. Infection of the urinary tract in vitamin A deficient diets. Riv. Clin. Ped. 24(8): 505-529.

(2942) Frontali, G. 1938. Vitamin A-Keratomalacia in children. Minerva. Med. I: 1-11.

(2943) Frontali, G. 1952. Osteosclerotic syndrome following too large dosage of vitamins A and D. Schweiz, Med. Wchnschr. 82: 430-433.

(2944) Fry, J. L. ; et al. Relationship of dietary menadione sodium bisulfite complex (MSBC) and vitamin A to blood spot incidence and prothrombin time of laying hens. Poultry Sci. 47(2): 630-634.

(2945) Fuchs, L. 1936. Die absorptions-Spektralanalyse in Forschung und Praxis, besonders auf dem Gebiete der Vitamine und Hormone. Pharmaz. Mh. 17: 19-24.

(2946) Fuhr, I. ; et al. 1943. The effect of ultraviolet irradiation on the vitamin A, carotene and riboflavin content of milk. J. Dairy Sci. 26: 643-646.

(2947) Fujii, G. 1948. Utilization of vitamin A in the viscera of fishes. XIV. Distribution of vitamin A in the viscera of fishes and a test of storing pyloric ceca in alcohol. J. Fermentation Technol. 26: 281-286.

(2948) Fujii, H. and K. Suzuki. 1952. Effect of the extraction of water-soluble active components from the whale liver on its vitamin A. Repts. Japan. Marine Products Co. Research Lab. 5: 27-31.

(2949) Fujimaki, Y. T. K. ; et al. 1926. On the morphological changes of the pavement epithelium of albino rats fed on a vitamin A deficient diet. "Gann," Jap. Jour. Cancer Res. 21(1): 8-15.

(2950) Fujimaki, Y. 1926. Vitamin A-Formation of urinary and bile duct calculi in animals fed on experimental rations. Japan Med. World. 6(2). 1-9.

(2951) Fujimaki, Y. 1927. On the constituents of Saiki and Fujimaki's vitamin A deficient diets as employed in our experiment. Sei-I-Kwai Med. Jour. 46(3): 1-5.

(2952) Fujimaki, Y. 1927. Vitamin A-On the morphological changes of the pavement epithelium of albino rats fed by Saiki and Fujimaki's method. Sei-I-Kwai Med. Jour. 46(2): 1-6.

(2953) Fujimaki, Y. 1927. Vitamin A-Formation of gastric carcinoma in albino rats fed on deficient diets. Jour. Cancer Res. 10(4): 469-477.

(2954) Fujimaki, Y. 1927. Morphological changes of pavement epithelium of albino rats fed on vitamin A deficient diet. Gann. 21: 8-15.

(2955) Fujimaki, Y. ; et al. 1927. On the morphological changes of the pavement epithelium of albino rats fed on a vitamin A deficient diet. Sei-I-Kwai Med. Jour. 46(5): 15.

(2956) Fujimaki, Y. ; et al. 1928. Vitamin A-relationship between morphological changes in forestomach of rats fed on special diets and constituents of diets. Sci-I-Kwai Med. J. 47: 1-5.

(2957) Fujioka, F. ; et al. 1964. Role of vitamin A in intestinal muscular contraction. Tokyo Nogyo Daigaku Nogaku Shuho. 10(2): 19-23.

(2958) Fujita, A. and T. Sakamoto. 1940. Determination of vitamin A in presence of vitamin A . J. Biochem. 32: 443-449.

(2959) Fujita, A. and T. Sakamoto. 1941. Uber die Bestimmung des Vitamins A. II. Uber die spektrophotometrische Bestimmung. Biochem. Zeitschr. 308(4/5): 344-354.

(2960) Fujita, A. and T. Sakamoto. 1941. Uber die Bestimmung des Vitamins A. I. Uber die kolorimetrische Bestimmung nach Carr und Price. Biochem. Zeitschr. 308(4/5): 334-343.

(2961) Fujita, A. and M. Aoyama. 1951. Colorimetric determination of vitamin A with glycerol dichlorohydrin. Jour. Biochem. (Tokyo). 38(3): 263-269.

(2962) Fujita, A. and M. Aoyama. 1951. Vitamin A-fluorometric determination. J. Biochem. 38: 271-275.

(2963) Fujita, A. and M. Aoyama. 1952. Determination of vitamin A and carotene in blood and milk. (Kitasato Inst.). Vitamins (Japan). 5: 47-51.

(2964) Fujita, A. and M. Aoyama. 1953. Free and esterified vitamin A in fish oils; chromatographic separation and colorimetric determination. J. Biochem. 40: 151-156.

(2965) Fujita, A. and M. Aoyama. 1953. Colorimetric and fluorometric determination of vitamin A in fish liver oils; chromatographic separation of vitamin A and nonvitamin A materials in unsaponifiable matter. J. Bioehem. 40: 157-168.

(2966) Fujita, A. ; et al. 1956. The determination of vitamin A in feces. J. Vitaminol. 2: 171-176.

(2967) Fujita, A. ; et al. 1957. Vitamin A-Absorption of carotene in man. Jour. Vitaminol. 3(3): 223-234.

(2968) Fujita, A. and K. Numata. 1958. Vitamin A -Simple colorimetric determination of vitamin D using superfiltrol chromatography. Jour. Vitaminol. 4(4): 299 -309.

(2969) Fujita, A. ; et al. 1960. Nachweismethode fur Vitamin A in Wursten. Vitamins 19: 238-243.

(2970) Fujita, A. and H. Morimoto. 1960. Absorption of carotene in man as observed from the increase of serum vitamin A and carotene levels. J. Vitamin. 6: 278 -290.

(2971) Fujita, A. and K. Kimura. 1960. An improved micromethod for fractional determination of vitamin A alcohol and ester and the changes in both types of vitamin A in blood plasma, milk and liver after loading with both types of the vitamin and β -carotene. J. Vitamin. 6: 6 -15.

(2972) Fujita, A. and H. Morimoto. 1960. Absorption of carotene in man as observed from the increase of serum vitamin A and carotene levels. J. Vitaminol. 6: 278-290.

(2973) Fujita, T. ; et al. 1970. Vitamin A -Hypothalamic -hypophystal adrenal and thyroid systems; observations in fetal rats subjected to hypothalamic destruction, brain compression and hypervitaminosis A. Anat. Rec. 166: 659 -671.

(2974) Fujita, F. ; et al. 1962. Metabolic activities of vitamin A and related compounds in animals. I. Role of vitamin A in muscular contraction. J. Vitaminol. 8(4): 268-274.

(2975) Fujita, T. and K. Inoue. 1960. Studies on vitamin A deficiency in domestic animals. III. Relation between vitamin A reserves in the liver and adrenal cortex of rat. Japanese Jour. Vet. Sci. 22(Suppl.): 556.

(2976) Fukushi, T. ; et al. 1967. Vitamin A -Contents of vitamins and calcium. Hokkaido -ritsu Eisei Kenkyushoho. 17: 108 -110.

(2977) Fulton, J. E., Jr. ; et al. 1968. Darier's disease. Treatment with topical vitamin A acid. Arch. Dermatol. 98(4): 396 -399.

(2978) Funaki, K. and M. Inagaki. 1954. Vitamin A-Concentration of liver oils. I. Application of paper chromatography for selection of solvent. Bull. Japan. Soc. Sci. Fisheries. 20: 726-730.

(2979) Funchess, M. J. 1946. Vitamin A-Fifty-fourth and fifty-fifth annual reports. Alabama Agr. Exptl. Sta. 54th and 55th Ann. Repts. 32pp.

(2980) Funder, W. 1960. Modification of experimental corneal necrosis by local application of vitamin A and Panthenol. Arch. Ophthalmol. 1962: 430-439.

(2981) Funk, C. 1919. Vitamin A-The action of substances influencing the carbohydrate metabolism in experimental beri-beri. J. Physiol. 53: 247-256.

(2982) Funk, C. and J. B. Paton. 1922. Vitamin A-Studies on vitamins B and D. J. Metabolic Research. 1: 737-775.

(2983) Furukubo, T. 1931. Vitamin A-Uber den Gehalt der Gewebe an Fettsauren and unverseifbaren Substanzen unter verschiedenen Bedingungen. Journ. Biochemistry. 13: 185-209.

(2984) Futch, M. C. ; et al. 1939. The vitamin A content of dried citrus pulp. J. Dairy Sci. 22: 115-116.

(2985) Futobata, T. ; et al. 1963. Determination of vitamins in food. I. Vitamin A. Eiyogaku Zasshi. 21(2): 47-53.

(2986) Futterman, S. 1962. Enzymic oxidation of vitamin A aldehyde to vitamin A acid. J. Biol. Chem. 237: 677-680.

(2987) Futterman, S. 1963. Vitamin A-Stoffwechsel der Retina. 3. Mitt. Die Rolle des reduzierten Triphosphopyridinnucleotid im Seh-Cyclus. J. Biol. Chemistry. 238: 1145-1150.

(2988) Futterman, S. and J. S. Andrews. 1964. Stoffwechsel der Retina. 4. Mitt. Die Zusammensetzung des durch die Retina synthetisierten Vitamin-A-Esters. J. Biol. Chemistry. 239: 81-84.

(2989) Futterman, S. and J. S. An drews. 1964. The composition of liver vitamin A ester and the synthesis of vitamin A ester by liver microsomes. J. Biol. Chem. 239(12): 4077-4080.

(2990) Futterman, S. and J. S. Andrews. 1964. The fatty acid composition of human retinal vitamin A ester and the lipids of human retinal tissue. Invest. Ophthalmol. 3(4): 441-444.

(2991) Fyfe, W. M. 1956. Vitamin A level in idiopathic hyper-calcemia. Lancet. 270: 610-612.

(2992) Gaal, I. and M. Szabo. 1941. Vitamin A-impairment of phagocytic function of reticuloendothelial system in hypovitaminosis. Magyar. Orvosi, Arch. 42: 330-332.

(2993) Gaal, I. and M. Szabo. 1942. Vitamin A-Changes in the phagocytic activity of the reticulo-endothelium in hypovitaminosis A. Zeitschr. Ges. Exptl. Med. 110: 57-59.

(2994) Gade, E. T. and J. D. Kadlec. 1956. Rapid estimation of vitamin A using a surface-active agent. J. Agr. Food Chem. 4:426-427.

(2995) Gaden, E. L. ; et al. 1951. Vitamin A-Preservation of milk by radiation. Food Technol. 5(12): 506-509.

(2996) Gadsden, E. L. ; et al. 1960. Vitamin A-Papierchromato-graphie bestimmter Vitamine in Phenol und Butanol-Propionsaure-Wasser als Losungsmittel. Analytic. Chem. 32: 1415-1417.

(2997) Gaehtgens, G. 1937. Uber die Ausscheidung von Vitamin A in der Graviditat. Klin. Wschr. 16: 52-53.

(2998) Gaehtgens, G. 1937. Der Ubergang von Carotin und Vitamin A aus dem mutterlichen in den kindlichen Blutkreislauf. Arch. Gynakol. 164: 398-407.

(2999) Gaehigens, G. 1937. Carotene and vitamin A in blood of pregnant. Klina Wchnschr. 16: 893-894.

(3000) Gaehtgens, G. 1937. Carotin und Vitamin A in der foetalen Leber und im Fruchtwasser. Klin. Wschr. 16: 1073-1075.

(3001) Gaehtgens, G. 1937. Der Gehalt der Placenta an Carotin und Vitamin A. Klin. Wschr. 16: 1075-1076.

(3002) Gaehtgens, G. 1938. Carotene-vitamin A metabolism in lactating puerperas. Arch. F. Gynak. 166: 522-526.

(3003) Gaehtgens, G. 1940. Significance of vitamins A and B in pregnancy. Geburtsh. U. Frauenh. 2: 288-305.

(3004) Gaehtgens, G. 1942. Vitamin A-Vitamins in diet during pregnancy. Arch. Gynakol. 173: 332-354.

(3005) Gaehtgens, G. 1943. The hormonal direction of the germ-gland function in the colpokeratosis of vitamin A deficiency. Vitamine u. Hormone. 4: 22-33.

(3006) Gaehtgens, G. 1943. Vitamin A-The influence of nutritional deficiency on the genital cycle of rodents and its significance in the various forms of ovarian insufficiency in women. Vitamine u. Hormone. 4: 1-21.

(3007) Gagnon, M. and A. M. Dawson. 1968. The effect of bile on vitamin A absorption in the rat. Proc. Soc. Exp. Biol. Med. 127(1): 99-102.

(3008) Gajjar, I. M. 1946. Vitamin A-Chemical composition of (Indian) shark-liver oil. J. Sci. Ind. Research (India). 5(1B): 18-23.

(3009) Gal, I. ; et al. 1971. Effects of oral contraceptives on human plasma vitamin-A levels. Br. Med. J. 2: 436-438.

(3010) Galbraith, D. 1923. Clinical investigation into relationship of fat-soluble "A" vitamin to aetiology of rickets. Quart. J. Med. 16: 321-340.

(3011) Gale, C. ; et al. 1959. Observations on levels of vitamin A and other factors in shipped feeder calves. Cornell Vet. 49(3): 319-324.

(3012) Galea, V. ; et al. 1958. Modification of the vitamin A content of rat liver subjected to exertion. Stud. Cercetari Med. 9(2): 135-141.

(3013) Galea, V. ; et al. 1961. Investigations on vitamin A requirements during muscular exertion. Rumanian Med. Rev. 5(1): 156-159.

(3014) Galea, V. ; et al. 1961. Vitamin A demand during physical exertion. Rumynsk. Med. Obozrenie. 5(1): 172-175.

(3015) Galea, V. 1962. Vitamin A-Biochemische Veranderungen unter toxischem Einflu von Benzol und Anilin. Rev. Chim. Bucarest. 7: 209-215.

(3016) Galeone, A. 1943. The factor A (carotene and vitamin A) in various endocrine diseases. Arch. Sci. Med. 75: 560-576.

(3017) Galeone, A. and G. San Lorenzo. 1948. Mechanism of biologic synergism between vitamins E and A; stabilizing effect of vitamin E on axerophthol in oily solution. Internat. Ztschr. Vitaminforsch. 19: 257-265.

(3018) Galindo, F. D. 1955. Die Bestimmung von Carotin und Vitamin A im Blutplasma offensichtlich gesunder Menschen. An. Fac. Farmac. Bioquim. 6: 333-343.

(3019) Galindo, F. D. 1960. Determination of carotene and vitamin A in blood plasma of apparently healthy persons. Cronica Med. (Lima). 77: 57-71.

(3020) Galli, R. and G. Bazzocchi. 1934. Vitamin A-Disturbances of vitamin exchange in relation to hepatic calculosis; preliminary report. Riv. Di. Pat. Sper. 12: 127-130.

(3021) Gallina, A. M. ; et al. 1970. Vitamin A-Bone growth in the hypovitaminotic A calf. J. Nutr. 100: 129-141.

(3022) Gallup, W. D. 1931. Vitamin A-Studies on the toxicity of gossypol. I. The response of rats to gossypol administration during avitaminosis. Jour. Biol. Chem. 93(2): 381-405.

(3023) Gallup, W. D., 1934. Specific effect of vitamin A on growth. Proc. Oklahoma Acad. Sci. 14: 53-56.

(3024) Gallup, W. D., and A. H. Kuhlman., 1941. Carotene content of the bood plasma of dairy cattle in relation to vitamin A deficiency. Proc. Oklahoma Acad. Sci. 21: 89-92.

(3025) Gallup, W. D., and J. A. Hoefer., 1946. Determination of vitamin A in liver. Indust. Engineer. Chem., Analyst. Ed. 18(5): 288-290.

(3026) Gallup, W. D.; et al., 1951. Comparative effect on vitamin A metabolism in sheep of urea, soybean oil meal and cottonseed meal as sources of protein. Jour. Animal Sci. 10(1): 251-256.

(3027) Gallup, W. D.; et al., 1953. Carotene and Vitamin A metabolism in cattle and sheep on phosphorus-deficient rations. Jour. Animal Sci. 12(4): 715-721.

(3028) Galton, V. A.; et al., 1965. Effects of vitamin deficiency on the in vitro and in vivo deiodination of thyroxine in the rat. Endocrinology. 77: 169-176.

(3029) Gamalero, P. C., 1955. Vitamin A-effect on hemopoiesis of children with hypochromic anemia. Minerva Pediat. 7:583-588.

(3030) Gambal, D., 1964. The effects of hormones on the in vivo incorporation of $P^{32}$ into testicular phospholipids in vitamin A deficient rats. Int. Congr. Biochem. 6(9): 719.

(3031) Gambal, D. J., 1966. Effect of hormones on the testicular lipids of vitamin A-deficient rats. J. Nutr. 89: 203-209.

(3032) Gamboa, L., 1930. Vitamin A-deficiency and nyctalopia. J. Philippine Islands, Med. A. 10: 235-238.

(3033) Gamp, A., and H. Gros. 1955. Vitamin A-disorders of metabolism in chronic polyarthritis. Ztschr. Ges. Inn. Med. 10: 597-600.

(3034) Gandra, Y. R., 1954. Nutritional status of group of population of city of Sao Paulo; vitamin A deficiency. Arq. Fac. Hig. e Saude Pub. 8: 193-260.

(3035) Ganguly, J.; et al., 1952. Absence of correlation between vitamin A alcohol in liver and plasma in rats. Fed. Proc. 11(1): 218.

(3036) Ganguly, J.; et al., 1952. Studies of the distribution of vitamin A as ester and alcohol and of carotenoids in plasma proteins of several species. Arch. Biochem. and Biophys. 38: 275-282.

(3037) Ganguly, J., and H. J. Deuel, Jr., 1953. Intracelluar distribution of vitamin A esterase activity in rat liver. Nature, London. 172: 120-121.

(3038) Ganguly, J., and N. I. Krinsky. 1953. Absence of relationship between vitamin A alcohol levels in plasma and in liver of rats. Biochem. Jour. 54(2): 177-181.

(3039) Ganguly, J.; et al., 1953. Carotenoid metabolism. XIV. Biological action of **Echinenon** Hoppe-Seyler's Z. Physiol. Chem. 295: 61-66.

(3040) Ganguly, J., 1954. Intracellular distribution of vitamin A esterase activity in rat liver. Arch. Biochem. and Biophys. 52: 186-189.

(3041) Ganguly, J., 1955. Eine einfache chromatographische Technik zur Routinebestimmung von Vitamin A bei Gegenwart gro er Mengen von Carotinoiden in tierischen Geweben. Proc. Soc. Biol Chemists, India 13: 36-37.

(3042) Ganguly, J.; et al., 1959. Der Transport von Carotinoiden, Vitamin A und Cholesterin durch die Darmwand von Ratten und Kuken. Biochem. J. 71: 756-762.

(3043) Ganguly, J., 1960. Absorption, transport, and storage of vitamin A. Vitamins and Hormones 18: 387-402.

(3044) Ganguly, J. and S. K. Murthy., 1964. Absorption of cholesterol and vitamin A in rats. Proc. Intern. Symp. Lipid Transport, 1963: 22-32.

(3045) Ganguly, J., 1966. Metabolism of vitamin A. J. Sci. Ind. Res. 25(11): 498-500.

(3046) Ganguly, J., 1967. Metabolism of vitamin A (rat). J. Sci. Ind. Res (India) 26(3): 110-130.

*(3047) Ganguly, J., 1969. Absorption of vitamin A. Amer. J. Clin. Nutr. 22(7): 922-932.

(3048) Garabedian, M. D., and P. Meunier., 1942. Vitamin A-adaptometry as clinical method of determining nutritional deficiencies. Ophthalmologica. 104: 65-85.

(3049) Garbers, C. F.; et al., 1954. Vitamin A activity of cis-β-carotene C. Helv. Chim. Acta 37: 382.

(3050) Garbers, C. F., 1958. Transport von Vitamin-A-Estern im Serum der Ratte. Nature, London 182: 1018-1019.

(3051) Garbers, C. F.; et al., 1960. The transport of vitamin A in rat serum with special reference to the occurrence of unidentified metabolites of vitamin A in the rat. Biochem. Jour. 75(1): 124-132.

(3052) Garbers, C. F.; et al., 1961. Die Absorptionspektren der Komplexe von Polyenverbindungen mit dem Carr-Price-Reagens. South African Ind. Chemist 15: 33-37.

(3053) Garcia, H. E. m 1964. Clinical use of vitamin A in association with vitamin E. Med. Rev. Mex. 44(943): 311-314.

(3054) Garcia, J. Martins., 1942. Allergy to vitamin A and foods containing carotene; case. Brasil-Med. 56: 6-13,

(3055) Gardner, E. L., and F. W. Gardner., 1934. Vitamin A and colds. Am. J. Dis. Child. 47: 1261-1264.

(3056) Gardiner, M. R., 1968. Further studies on avian biliary cirrhosis with particular references to aetiology. Aust. Vet. J. 44(11): 512-515.

(3057) Gardiner, V. E.; et al., Vitamin A ester and vitamin A alcohol in the serum of the estrogenized immature pullet. Nature 170: 80-81.

(3058) Garg, B. M. L. and I. S. Verma., 1966. Breakdown of milk fat in cheese ripening. Int. Dairy Congr., Proc. 17th. 4: 343-348.

(3059) Garkina, I. N., 1955. Chemical and spectroscopic methods for determination of vitamin A. Vitaminnye Resursy i Ikh Ispol'-zovanic, Akad. Nauk S. S. S. R., Inst. Biokhim, im. A. N. Bakha, Shornik 3: 5-21.

(3060) Garratt, D. C., 1938. Ein warmebestandiges Isomeres von Vitamin A in Lebertran. Nature, London, 142: 75-76.

(3061) Garrett, O. F., and H. H. Mitchell., 1933. An application of the paired feeding method to the quantitative estimation of the relative vitamin A contents of foods and artificial concentrates. Amer. Jour. Physiol. 104(3): 608-614.

(3062) Garrett, O. F., and D. K. Bosshardt., 1944. Effect of feeding silages on certain properties of milk. I. Effect on the yellow color and flavor of winter milk. New Jersey Agr. Exptl. Sta., Bull. 710: 30pp.

(3063) Garrido, M. M. A., and E. P. Hidalgo., 1949. Human colostrum and its vitamin content. Actas. y. Trabajos Congr. Peruano Quim., 3° Congr. (Lima, Peru) 1: 382-385.

(3064) Garry, P. J.; et al., 1970. Plasma vitamin A assay by fluorometry and use of a silicic acid column technique. Clin. Chem. 16: 766-772.

(3065) Gartner, R. J. W., and J. W. Riley.,1956. Vitamin A bei Gefugel. Ein Uberblick uber Reserven an Vitamin A in der Leber von Huhnern und ihren Zusammenhang mit Krankheiten. Queensland J. Agric. Sci. 13: 1-12.

(3066) Gartner, R. J. W. and H. W. Burton., 1957. Vitamin A im Gefugel Auswirkungendes Vitamin-Mangels. Queensland J. Agric. Sci. 14: 189-216.

(3067) Gartner, R. J. W., 1959. Variations in the carotene and vitamin A contents of Queensland butterfats. Queensland J. Agr. Sci. 16: 1-30.

(3068) Gartner, R. J. W., and J. W. Ryley., 1962. Relation between hepatic and butterfat vitamin A concentrations in beef cattle receiving neglibible carotene. Queensland J. Agr. Sci. 19: 341-350.

(3069) Gartner, R. J. W., and J. W. Ryley. 1962. Relation between nyctalopia, and plasma vitamin A levels and the effect of vitamin A supplementation in beef calves. Queensland J. Agr. Sci. 19: 363-372.

(3070) Gartner, R. J. W., and R. J. Anson., 1966. Vitamin A reserves of sheep maintained on mulga (A cacta aneura.). Australian J. Exp. Agr. Anim. Husb. 6(22): 321-325.

(3071) Gartner, R. J. W., and G. I. Alexander., 1966. Hepatic vitamin A reserves in drought-stricken cattle. Queensland J. Agr. Anim. Sci. 23(1): 93-95.

(3072) Gartner, R. J. W.; et al., 1967. The relation between concentrations of plasma and hepatic vitamin A in steers intensively finished on high-grain rations low in carotene. Aust. J. Exptl. Agr. Anim. Husb. 7(26): 213-216.

(3073) Gartner, R. J. W.; et al., 1968. Seasonal fluctuations of hepatic vitamin A reserves in beef cattle grazing unimproved pastures. Queensland J. Agr. Anim. Sci. 25(4): 225-233.

(3074) Gartner, R. J.; et al., 1970. Longbone abnormalities in kittens following vitamin A administration. J. Comp. Path. 80:113-121.

(3075) Gasnier, A., 1947. Vitamines and hormones. (Vitamin A). Laval Med. 12(4): 406-430.

(3076) Gassman, B.; et al., 1966. Comparative studies of vitamin absorption (in rats). Int. Z. Vitaminforsch 36(2): 117-126.

(3077) Gavrilova, C., 1945. Vitamin A-Apple "nuggets". Canner 100. (20): 16-17.

*(3078) Gaylor, J. L., 1964. Possible role of vitamin A in metabolism of mucopolysaccharides. New York J. Med. 64: 905-906.

(3079) Gazdarov, V. M., and L. M. Dvinskaya., 1966. Stabilization of vitamin A in rations and requirements of laying hens. Fiziol. Biokhim. Osn. Povysh. Prod. Sel'skokhoz. Zhivotn., Sb. Dokl. Vses. Konf., 3rd, (Moscow) 1965 (2): 21-30.

(3080) Gazo, M., and L. Landau., 1958. Gehalt an Vitamin A und Karotin in Milch von Kuhen aus einzelnen Gemelken bei drei-und viermaligem Melken am Tag. Pol'nohospodarstvo 5: 1194-2103.

(3081) Gazo, M., and W. Feldhelm., 1960. The distribution of vitamin A, E and C in the liver. I. The vitamin A, E anc C content in the hepatic lobes of roosters. Int. Z. Vitaminforsch 31:20-26.

(3082) Gazo, M., and W. Feldhelm., 1961. The distribution of vitamins A, E and C in the liver. II. The content of vitamin A alcohol and vitamin A ester in the hepatic lobes of chickens. Int. Z. Vitaminforsch 31: 170-176.

(3083) Gazo, M., and L. Landau., 1964. Changes of content of vitamin A and carotenoids in cows milk during milking. Ustav Vedeckotech. Inform. Min. Zemedel. Lesniko Vodniko Hospodarstvi. Zivocisna Vyroba 9(2): 101-106.

(3084) Gazo, M.; et al., 1967. The influence of different levels of protein in the diet on the utilization of Vitamin A. Ved. Pr. Vysk. Ustav. Chov. Hydiny Ivanka Pri. Dunaji. 4: 117-137.

(3085) Gazo, M.; et al., 1967. Vitamin A in chickens. III. The deposition of vitamin A in chickens in the 1st days after hatching. Ved. Pr. Vysk Ustav. Chov. Hydiny Ivanka Pri. Dunaji. 4: 103-113.

(3086) Gazo, M.; et al., 1967. Vitamin metabolism in poultry. III. The vitamin A stores of baby chicks in the first week of life. Int. Z. Vitaminforsch. 37(1): 51-57.

(3087) Gazo, M.; et al., 1966. Vitamin A in chickens; I. The distribution of vitamin A in the chicken. Ved. Pr. Vysk Ustavu Chov. Hydiny ivanke Pri Dunaji. 3: 269-274.

(3088) Gazo, M.; et al., 1966. Vitamin A in chicken: II. The influence of a different protein content in the diet on the hepatic reserves of vitamin A in chickens. Ved. Prvysk Ustavu Chov Hydiny Ivanke Pri. Dunaji. 3: 275-291.

(3089) Gazo, M.; et al., 1968. Vitamin A in chicks: VI. The influence of gradually increased doses of a protein anabolic steroid (Stenolone-Spofa) on the hepatic reserves of vitamin A in chicks. Ved. Pr. Vysk Ustav. Chov. Hudiny Ivanka Pri. Dunaji. 5: 5-10.

(3090) Gazo, M.; et al., 1968. Vitamin metabolism in chicks: IV. Interrelationship between vitamin A depletion and nitrogen balance in growing cockerels. Int. Z. Vitaminforsch 38(5): 459-465.

(3091) Gazo, M.; et al., 1968. Vitamin A in chicks: VII. The influence of different levels of protein in the diet on the depletion of hepatic vitamin A reserves. Ved. Pr. Vysk. Ustav. Chov. Hydiny Ivanka Pri. Dunaji. 5: 11-23.

(3092) Gebauer, H., 1954. Die Milz der Albinoratte bei Vitamin-A-Mangel. Naturwissenschaften 41: 288-289.

(3093) Gebauer, H., 1954. Hypervitaminosis A and pregnancy. Pharmazie 9 (8): 684-685.

(3094) Gebauer, H., and I. Nebel., 1956. Mikroeinwaage von Leber Zur Vitamin-A- Bestimmung. Pharmazie 11: 717.

(3095) Gebauer, H., 1958. Zum Einflu βvon Vitamin A und E auf die Atherosklerose. Naturwissenschaften 45: 94-95.

(3096) Gebhardt, G., 1955. Untersuchungen ober den Einflu einiger Vitamine auf den endogenen und ezogenen Eiwei umsatz an wachsenden Albinoratten. Arch. Tierernahr. 5: 70-141.

(3097) Gebhardt, Gunter., 1955. Vitamin A-The influence of some vitamins on the endogenous and exogenous protein metabolism in growing albino rats. Arch. Tierernahr. 5: 70-124.

(3098) Geczy, G., 1962. Modified process for the determination of vitamin A. Elelmiszervissgalati Kozleman. 8: 49-54.

(3099) Geczy, G., 1964. Quantitative Bestimmung von Vitamin A neben anderen Vitaminen and Mineralstoffen in wa rig emulgierten oder durch Gelatine mineralstabilisierten Konzentraten. Elelmiszervizsgalati Kozlemenyek Lebensmittelanalyt. Mitt. 10: 100-104.

(3100) Geczy, G., 1967. Quantitative Bestimmung von Vitamin A mit Aluminiumchlorid. Ung. Z. Chem. 73(2): 85-87.

(3101) Geiger, C., 1968. Influence of vitamin A deficiency and overdose on the ovaries of pubescent rats. Arch. Gynaekol 206(4): 411-430.

(3102) Geison, R. L., 1966. The relation of ATP-sulfurylase activity to vitamin A deficiency and the metabolism and biological activity of retinoic acid. Univ. Micro-films. Order No. 66-4184.

(3103) Geison, R. L.; et al., 1968. Comparative effects of vitamin-A-deficiency and controlled food consumption on adenosine 5' triphosphate: Sulfate adenylyitransferase. Biochim Biophys Acta. 165(3): 448-458.

(3104) Geison, R. L., 1970. Studies on the in vivo metabolism of retinoic acid in the rat. Lipids 5(4): 371-378.

(3105) Gelesskul, J. F., 1964. Wirksamkeit des Carotins in oliger Losung und im Komplex mit Elweiβ . Ukrains 'kyj biochim. Z. 36: 888-892.

(3106) Gellhorn, E., and J. O. Dunn. 1937. Influence of lack of vitamin A in the diet on the phagocytosis-promoting properties of the blood serum. J. Nutrition 13 317-328.

(3107) Gelpke, P. M., 1971. Vitamin A intoxication. Can. Med. Assoc. J. 104:533.

(3108) Gemeinhardt, K., and H. Jeglinski., 1941. The detection and determination of vitamin A in vitamized margarine. Vitamine u. Hormone. 1: 341-346.

(3109) Gemeinhardt, K., and H. Jeglinski. 1942. Comparison of Carr-Price reaction and spectrographic methods for the determination of vitamin A in concentrates. Vitamine u. Hormone 2: 44-48.

(3110) Geminder, J. J., and E. E. Macdonough. 1957. The use of coloring ingredients in fatty food products. Their physiology, chemistry and stability. Jour. Amer. Oil. Chemists Soc. 34(6): 314-318.

(3111) Genderson, H. V. ; et al., 1950. Determination of Vitamin A in whale oil and its concentrates. New International Standard Regulations. Chem. Weekbald 46: 861-867.

(3112) Genest, A., 1968. Vitamin A and the electroretinogram in humans. In: The clinical value of electroretinography. S. Karger; New York and Basel, Switz. 250-259.

(3113) Genest, A. A.; et al., 1967. Nutrition research in Indonesia and Thailand: Vitamin A blood serum levels and electroretinogram in 5 to 14-year age group in Indonesia and Thailland. Amer. J. Clin. Nutr. 20(12): 1275-1279.

(3114) Genevois, L., and J. Dufrenoy., 1948. Vitamin A-The vitaminization of food in the U. S. A. Chim. et Indust. 59(2): 128-130.

(3115) Genfors, B., 1954. Spektrophotometrische Bestimmung von Vitamin A. Farmac. Revy 53: 617-629.

(3116) Genin, G., 1937. The influence of irradiation on the content of vitamin A in concentrated milks. Lait 17: 368-369.

(3117) George, C. J., and J. C. George., 1944. Vitamin A-A note on Crustacean liver oils. Jour. Univ. Bombay 13(16): 17.

(3118) Gerber, A.; et al., 1954. Vitamin A poisoning in adults. Am. J. Med. 16: 729-745.

(3119) Gerloczy, F.; et al., 1958. Vitamin metabolism in infantile atrophy. Acta Med. Acad. Sci. Hung. 12: 1-83.

(3120) Gerloczy, F.; et al., 1959. Vitamin A metabolism in infants with Leiner's disease. Z. Kinderheilk. 82: 271-278.

(3121) Germeraad, W. F.; et al., 1955. Vitamin A treatment of acne vulgaris., Ned. Tijdschr. Geneeskunde 99: III: 2358-2363.

(3122) Gerona, F. S., 1930. Vitamin A-Die Vitamine in den Olen. Ann. Falsifications 23: 284-290.

(3123) Gerona, F. S., 1934. Vitamin A-The vitamins of olive oil. Bull. Mat. Grasses Inst. Colonial Marseille 18: 281-286.

(3124) Gerrard, E. A., 1938. Vitamin A-A case of severe ulceration of the vulva and vagina during pregnancy. Treated by the administration of vitamins. J. Obstet. Gynaecol. Brit. Empire 45: 683-685.

(3125) Gershbein, L. L., 1965. Fettlosliche Vitamine und Kohlenhydratstoffwechsel des Rattenzwerchfells. Arch. Biochem. Biophysics 109: 603-606.

(3126) Gershoff, S. N.; et al., 1957. Vitamin A deficiency in cats. Lab. Invest 6(3): 227-240.

(3127) Gershoff, S. N., and Agnes M. Huber., 1967. Vitamin A-Effects of various nutrient deficiencies on adipose tissue metabolism. Proc. Int. Congr. Nutr., 2: 119-122.

(3128) Getz, H. R., 1939. Vitamin A deficiency in normal and tuberculosis persons as indicated by the biophotometer. J. Am. Med. Assoc. 112: 1308-1311.

(3129) Getz, H. R., and T. A. Koerner., 1941. Vitamin A and ascorbic acid in pulmonary tuberculosis. Amer. Jour. Med. Sci. 202(6): 831-847.

(3130) Getz, H. R., and T. A. Koerner., 1943. Vitamin A-nutrition in tuberculosis. Am. Rev. Tuberc. 47: 274-283.

(3131) Getz, H. R.; et al., 1951. Relation of nutrition to the development of tuberculosis; influence of ascorbic acid and vitamin A. Am. Rev. Tuberc. 64: 381-393.

(3132) Getz, H. R., 1955. A physiologic and clinical study of failures in vitamin A metabolism in tuberculous patients. Am. Rev. Tuberc. 72: 218-227.

(3133) Getz, H. R., 1956. Vitamin A metabolism in tuberculous patients. Am. Rev. Tuberc. 73: 603-604.

(3134) Ghannam, S. H.; et al., 1966. The effect of different levels of vitamin A on the reproductive organs of young bulls. Int. J. Fertil. 11(3): 306-317.

(3135) Ghannam, S.; et al., 1968. The effect of different levels of vitamin A on the anterior pituitary of young bulls. Res. Vet. Sci. 9(5): 481-485.

(3136) Ghannam, S.; et al., 1969. The effect of vitamin A depletion on the vasa deferentia of young bulls. Res. Vet. Sci. 10(1): 79-82.

(3137) Ghelberg, S. A.; et al., 1967. Effects of the administration of some liposoluble and water-soluble vitamins on the metabolism of ascorbic acid in guinea pigs. I. Influence of vitamins A and B 1 in guinea pigs fed a breeding-farm diet. Rev. Medicochir Iasi. 73: 693-700.

(3138) Ghircoiasiu, M.; et al., 1965. Effect of nutritional vitamin A uptake on the nucleic acids and glycogen in the liver and integuments. Studia Univ. Babes-Bolyai, Ser. Biol. (2): 103-108.

(3139) Ghose, S. N., 1923. Die Bedutung von Vitaminen fur die terische ernahrung. Journ. Metabol. Res. 4: 499-513.

(3140) Ghosh, A. R., and B. C. Guha., 1934. The nutritive values of Indian foodstuffs. II. Indian J. Med. Research 21: 761-764.

(3141) Ghosh, A. R., and B. C. Guha., 1935. Vitamin-A-Werte von indischen Fischleberolen mittels biologischer und tintometrischr Bestimmung. Indian J. Med. Res. 22: 521-528.

(3142) Ghosh, N. C.; et al., 1965. Effects of vitamins A and D on the biosynthesis of L-ascorbic acid by rat-liver microsomes. Biochem. J. 97(1): 247-249.

(3143) Gianni, A. M., and G. L. Missere., 1958. Vitamin content of liver tissue in regeneration of partial hepatectomy. Arch. Ital. Sci. Farmacol. 8: 122-127.

(3144) Giannico, O., and P. Marazza., 1947. Vitamin A and the reticuloendothelial system. Fisiol. e Med. (Rome) 15: 577-583.

(3145) Gianotti, F., 1953. Therapeutic experience with vitamin A and successively with gonadotropic hormones and testosterone (androgen) in case of xeroderma pigmentosa. Gior. Ital. Dermat. el Sif. 94: 211-216.

(3146) Giardino, G., 1943. Vitamin A and provitamin A in the serum and adaptometry in patients with skin disorders. Folia. Med. (Naples) 29: 125-151.

(3147) Gibbs, G. E., 1950. Effect of pancreatin on plasma vitamin A curves in celiac syndrome (and cystic fibrosis of pancreas), Pediatrics. 6: 593-600.

(3148) Giblin, W. E., 1936. Lowenthal's new cutaneous manifestation in syndrome of vitamin deficiency observed in Papuan natives. Med. J. Australia 1: 202-203.

(3149) Gibson, G. P., a nd R. J. Taylor, 1945. Dynamic method for observing antimony chloride reaction with vitamin A and related substances. Analyst. 70: 449-457.

(3150) Giddings, M. L., and H. C. Swim., 1934. Ein Vergleich von Extraktionsmethoden zur Entziehung von Vitamin A aus Rattenfutter. J. Nutrit. 7: 633-646.

(3151) Giedosz, B., 1935. Vitamin A-Effects of thyrostimulin on the histological appearance of the endocrine glands. Compt. Rend. Soc. Biol. 120: 555-556.

(3152) Giedosz, B., 1935. Influence des vitamines A et C sur l'aspect histologiques des glandes endocrines. Compt Rend. Soc. Biol. 120(33): 557-559.

(3153) Gil, A. Carrillo., 1936. Vitamin A-avitaminosis. Rev. Med. de Yucatan 18: 239-243.

*(3154) Gil, A.; et al., 1968. Vitamin A requirement of the guinea pig. J. Nutr. 96(3): 359-362.

(3155) Gildea, E. F., 1938. Lipide content of the blood in deficiency diseases and during demyelinization of the nervous system. Arch. Neurol. Psychiat. 39: 284-297.

(3156) Giliberti-Tincolini, V. ; et al. 1968. Vitamin A-Benign endocranial hypertension (pseudotumor cerebri). Report of 2 cases. Riv. Clin. Pediat. 81: 658-665.

(3157) Gilje, K. 1945. Vitamin A-examination of dark adaptation with biophotometer as criterion of deficiency; technic and standard curves. Acta. Ophth. 23: 245-271.

(3158) Gillam, A. E., and R. A. Morton. 1931. Vitamin A-The antimony trichloride colour test and the ultra-violet absorption of liver oils and concentrates. Biochem. Jour. 25(4): 1346-1351.

(3159) Gillam, A. E. ; et al. 1933. Variations in the quality of butter, particularly in relation to the vitamin A, carotene and xanthophyll contents as influenced by feeding artificially dried grass to stall-fed cattle. Biochem. J. 27: 878-888.

(3160) Gillam, A. E. 1934. Uber eine modifizierte spektrophotometrische Methode zur Bestimmung von Carotin und Vitamin A in Butter. Biochemical J. 28: 79-83.

(3161) Gillam, A. E. and I. M. Heilborn. 1934. Die Beziehung der Farbe und des Vitamin-A-Gehaltes von Butter zur Natur der Futterration. II. Der Carotin-und Vitamin-A-Gehalt der Butter. Biochemical J. 28: 1082-1085.

(3162) Gillam, A. E. and M. S. El Ridi. 1935. Carotinoide und Vitamin A im Blutserum des Rindes. Biochemical J. 29: 2465-2468.

(3163) Gillam, A. E. and I. M. Heilbron. 1935. Vitamin A-active substances in egg-yolk. Biochem. Jour. 29(5): 1064-1067.

(3164) Gillam, A. E. ; et al. 1936. Variations in the carotene and vitamin A values of the milk fat (butter) of cattle of typical English breeds. Biochem. J. 30: 1728-1734.

(3165) Gillam, A. E. and M. S. El Ridi. 1938. Die Veranderung des Extinktionskoeffizienten von Vitamin A mit dem Losungsmittel. Biochemical J. 32: 820-825.

(3166) Gillam, A. E., and M. S. El Ridi. 1937. Vitamin A-The carotene of milk fat (butter). Biochem. J. 31: 251-253.

(3167) Gillam, A. M. ; et al. 1938. Die Wirkung von handelsma iger Sterilisierung auf den Nahrwert von Milch. III. Wirkung auf den Vitamin-A-und Carotingehalt von Milch. J. Dairy Res. 9: 17-21.

(3168) Gillam, A. E., and S. El Ridi. 1938. The variation of the extinction coefficient of vitamin A with solvent. Biochem. Jour. 32(5): 820-825.

(3169) Gillam, A. E. 1938. The vitamin A and A contents of mammalian and other animal livers. Biochem. Jour. 32(9): 1496-1500.

(3170) Gillet, P. ; et al. 1965. Vitamin A-Spherocytic anemia with early deglobulization attack and avitaminosis A. Pediatrie. 20: 567-577.

(3171) Gillivray, W. A. 1961. Some factors influencing the release of vitamin A from the liver. Brit. J. Nutrition. 15: 305-312.

(3172) Gillivray, W. A. 1961. The conversion into vitamin A of intravenously administered aqueous dispersions of carotenoids. Brit. J. Nutrition. 15: 313-325.

(3173) Gillman, J. ; et al. 1945. Vitamin A and porphyrin-like fluorescence in livers of pellagrins, with special reference to effects of high carbohydrate diet and methionine. South African J. Med. Sc. 10: 67-86.

(3174) Gillman, J. ; et al. 1954. Some factors regulating the structural integrity of the intrahepatic bile ducts with special reference to primary carcinoma of the liver and vitamin A. Cancer. 7(6): 1109-1154.

(3175) Gillman, J. ; et al. 1956. Identifizierung und Bestimmung von Vitamin A und β-Carotin in einem Gemisch aus tierischem Fett. Biochem. J. 63: 458-460.

(3176) Gillum, H. L., and R. Okey. 1936. Die Wirkung von quantitativer Unterernahrung und von Vitamin-A-Mangel auf das Gewebefett von Ratten bei cholesterinarmer Nahrung. J. Nutrit. 11: 303-308.

(3177) Gillum, H. L. and R. Okey. 1936. Die Wirkung von quantitativer Unterernahrung und von Vitamin-A-Mangel auf die Leberfettstoffe von Ratten bei einer Ernahrung mit Cholesterinzusatzen. J. Nutrit. 11: 309-317.

(3178) Gillum, H. L. ; et al. 1955. Alter und Ernahrungszustand. 5. Mitt. Vitamin A und Carotin. J. of Nutrit. 55: 655-670.

(3179) Gilmore, L. O. ; et al. 1947. Vitamin A-The prophylactic administration of vitamins to dairy calves. J. Am. Vet. Med. Assoc. 110: 390-393.

(3180) Gineste, P. J. 1941. Vitamins and the thymus. Effects of avitaminoses A and C on the weight and structure of the thymus. Compt. Rend. Soc. Biol. 135: 976-977.

(3181) Giok, L. T. ; et al. 1967. Vitamin A-Nutrition research in Indonesia and Thailand: Influence of early malnutrition on some aspects of the health of school-age children. Amer. J. Clin. Nutr. 20(12): 1280-1289.

(3182) Giolitti, G. 1949. Vitamin A-Action of concentrated hydrogen peroxide on the chemical constituents of milk. Atti. Soc. Ital. Sci. Vet. 3: 543-547.

(3183) Giordano, A. , and V. Gallo. 1950. Vitamin A-The alveolar lining in human avitaminosis A and pneumonia with giant cells of Hecht. Acta. Vitaminol. 4: 112-122.

(3184) Giral, J. 1952. The nature of the blue pigment of the Carr-Price reaction of vitamin A. Ciencia. 11(10/12): 265-272.

(3185) Giral, J. 1953. The nature of the blue pigment of the Carr-Price reaction for vitamin A. Mem. Congr. Cient. Mex. ,IV Centenario Univ. Mex. 2: 212-224.

(3186) Giraud, P. ; et al. 1937. Attempt at the treatment of typhoid fever with vitamin A. Bull. Mem. Soc. Med. Hop. Paris. 53: 422-427.

(3187) Giri, K. V. 1945. Vitamin A-The food value of fish. Sci. and Culture. 10(7): 275-281.

(3188) Giroud, A. 1954. Vitamin A-Embryonic malformations of a deficiency origin. Biol. Revs., Cambridge Phil. Soc. 29: 220-250.

(3189) Giroud, A., and M. Martinet. 1955. Vitamin A-embryonic malformations due to hypervitaminosis. Arch. Franc. Pediat. 12: 292-300.

(3190) Giroud, A., and M. Martinet. 1955. Vitamin A-Hypervitaminose A'' und Anomalien beim Foetus der Ratte. Int. Z. Vitaminforsch. 26: 10-18.

(3191) Giroud, A. and M. Martinet. 1955. Diverse malformations of the rat fetus in relation to the time of administration of vitamin A in excess. Compt. Rend. Soc. Biol. 149:1088-1090.

*(3192) Giroud, A. and M. Martinet. 1956. Teratogenesis by high doses of vitamin A as a function of stages of development. Arch. Anat. Microscop. et Morphol. Exptl. 45:77-98

(3193) Giroud, A. et. al. 1957. Quantitative data on the amount of vitamin A in the rat in experimental teratogenesis by hypervitaminosis A. Bull. Soc. Chim. Biol. 39:331-336.

(3194) Giroud, A. ; et al. 1956. Konzentration von Vitamin A bei Mutter und Foetus wahrend einer durch Hypervitaminose A beeinflu ten Teratogenese. C. R. Seances. Soc. Biol. Filiales. 150: 2064-2065.

*(3195) Giroud, A., and M. Martinet. 1957. Vitamin A-Morphogenese de l'anencephalie. Arch. Anat. Microsc. et Morphol. Exptl. 46(3): 247-264.

(3196) Giroud, A. ; et al. 1957. Vitamin A-Malformations of the (embryonic) urinary tract in hypervitaminosis A. Compt. Rend. Soc. Biol. 151: 1811-1813.

(3197) Giroud, A., and M. Martinet. 1958. Vitamin A-Stage of development of anencephaly. Compt. Assoc. Rend. Anat. 44(99): 301-306.

*(3198) Giroud, A., and M. Martinet. 1958. Vitamin A-Effects of hypervitaminosis A on rabbit embryos. Compt. Rend. Soc. Biol. 152: 931-932.

(3199) Giroud, A., and M. Martinet. 1959. Vitamin A-Ocular malformations with fibrosis of the vitreous in rabbit embryos subjected to hypervitaminosis A. Bull. Soc. Ophtal. Franc. 3: 191-201.

(3200) Giroud, A., and M. Martinet. 1959. Teratogenesis due to overdose of vitamin A in the rat, the mouse, the guinea pig, and the rabbit. Arch. Franc. Pediatrie. 16(7): 971-975.

*(3201) Giroud, A., and M. Martinet. 1959. Vitamin A-Extension to more species of mammals of the production of fetal malformations by hypervitaminosis A. Compt. Rend. Soc. Biol. 153: 201-202.

(3202) Giroud, A., and M. Martinet. 1960. Vitamin A-Anencephalia in mice caused by hypervitaminosis A and general considerations. Rev. Neurol. 103: 356-357.

(3203) Giroud, A., and M. Martinet. 1960. Vitamin A-Teratogenic action of hypervitaminosis A in the mouse as a function of the embryonic stage. C. R. Soc. Biol. 154: 1353-1355.

(3204) Giroud, A., and M. Martinet. 1961. Vitamin A-On the subject of cyclocephalic embryos. C. R. Soc. Biol. (Par) 155: 2074-2075.

(3205) Giroud, A. ; et al. 1962. Congenital ocular abnormalities in vitamin A deficiency. Ann. Oculist (Par). 195: 566-567.

* (3206) Giroud, A., and M. Martinet. 1962. Smallness of the teratogenic dose of vitamin A. Compt. Rend. Seances Soc. Biol. (Paris). 156(3): 449-450.

(3207) Giroud, A. 1964. Vitamin A and teratogenesis. Bull. Schweiz. Akad. Med. Wiss. 20(4-6): 440-450.

(3208) Giroux, R. N. ; et al. 1955. Vitamin A-Effect on quality of dairy products of various types of milk cans. I. Quality as affected by metal contamination. Can. Dairy Ice Cream J. 34(1): 36-43.

(3209) Gisvold, O. ; et al. 1948. Vitamin A-A preliminary investigation of the antioxidant effect of nordihydroguaiaretic acid in cod-liver oil. Jour. Amer. Pharm. Assoc. Sci. Ed. 37(6): 232-234.

(3210) Gitlin, G. 1954. Vitamin A-On the mode of development of stratified squamous epithelium in the rat's uterus following prolonged estrogen administration. Anat. Rec. 120(3): 637-661.

(3211) Gitlin, G. 1957. Vitamin A-Failure to detect squamous metaplasia in extragenital organs of the female rat following prolonged estrogen administration. Endocrinology. 60(4): 571-572.

(3212) Gitman, L. ; et al. 1958. Vitamin A-Osteoporosis in the aged; radiographic survey with clinical and biochemical correlations. Jour. Gerontol. 13(1): 43-47.

(3213) Gittleman, I. F., and A. S. Wiener. 1935. Vitamin A and infection. J. Pediat. 7: 81-88.

(3214) Gjone, E., and A. Forsdahl. 1962. Vitamin A load in malabsorption. T. Norsk Laegeforen. 82: 1577-1578.

(3215) Glanzmann, E. 1923. Vitamins of growth (A and B) and endocrine glands. Jahrb. F. Kinderh. 101: 1-2.

(3216) Glanzmann, E. 1923. Die Rolle der akzessorischen Wachstums-faktoren (Vitamine A und B) bei der Biochemie des Wachstums. Monatsschr. F. Kinderheilk. 25: 178-200.

*(3217) Glauert, A. M. ; et al. 1963. Studies on the mode of action of excess of vitamin A. VII. Changes in the fine structure of erythocytes during haemolysis by vitamin A. J. Cell. Biol. 17: 111-121.

(3218) Glavind, J. 1951. Vitaminstatus 1951. Ubersichtsarbeit. Fur Vitamin A, D, E u. K werden Vork., physiol. Bedeutung, Einheiten u. Darst. sowie industrielle Bedeutung der Vitaminherst. Ingenioren. 60: 674-678.

(3219) Glerasimow, M. ; et al. 1969. Blood serum proteins in exper-imental trichinellosis of white mice treated with vitamin A and aurothioglucose. Wiad. Parazyt. 15: 696-697.

(3220) Glezer, I. I. ; et al. 1966. Effect of toxic doses of vitamin A on the ultrastructure of the adrenals and electrolyte metabolism in rats. Vop. Pitan. 25(1): 16-23.

(3221) Glick, B. 1963. Indirect evidence of the influence of vitamin A on the adrenal cortex of the chick. Poultry Sci. 42(4): 1022-1023.

(3222) Glick, D. 1957. Vitamin A-Methods of biochemical analysis. Vol. IV. Illus. Interscience Publishers, Inc. New York.

(3223) Glick, D. ; et al. 1966. Influence of ACTH, food restriction and electric shock on total vitamin A in the rat adrenal gland and on its quantitative histological. Endocrinology. 78(5): 945-949.

(3224) Glick, D., and W. J. Kerr. 1968. Effect of vitamin A in vitro on histamine release and structure of mast cells. Exp. Cell. Res. 53(1): 129-134.

(3225) Gloor, U., and O. Wiss. 1959. Influence of vitamin A deficiency on the blosynthesis of cholesterol, squalene and ubiquinone. Biochem. and Biophys. Res. Commun. 1(4): 182-185.

(3226) Gloor, U., and O. Wiss. 1959. Vitamin A-Uber die Biosynthese von Ubichinon-(50). Arch. Biochem. Biophysics. 83: 216-222.

(3227) Gloor, U. ; et al. 1960. Vitamin A and the biosynthesis of cholesterol. Drugs Affecting Lipid. Metab., Proc. Symp., Milan. 80-2.

(3228) Gloor, U., and O. Wiss. 1964. Vitamin A-Fat-soluble vitamins. Ann. Rev. Biochem. 33: 313-330.

(3229) Gloster, J., and D. P. Greaves. 1965. The clinical measurement of bleaching of visual pigments in human subjects. Exp. Eye Res. 3(4): 327-333.

(3230) Glover, J. ; et al. 1947. Studies on vitamin A. I. Chromatographic method for separating free and esterified vitamin A. Biochem. J. 41: 94-96.

(3231) Glover, J. ; et al. 1947. Relationship between blood vitamin A levels and liver stores in rats. Biochem. J. 41: 97-100.

(3232) Glover, J. ; et al. 1948. Vitamin A. VI. Conversion in vivo of vitamin A aldehyde (retinene) to vitamin A. Biochem. J. 43: 109-114.

(3233) Glover, J. ; et al. 1948. Conversion of β-carotene into vitamin A in intestine of rat. Biochem. J. 43: 512-518.

(3234) Glover, J., and E. R. Redfearn. 1954. The mechanism of the transformation of β-carotene into vitamin A in vivo. Biochem. Jour. 58(2): 15.

(3235) Glover, J., and D. W. Stainer. 1959. Vitamin A-Sterol metabolism. IV. The absorption of 7-dehydrocholesterol in the rat. Biochem. J. 72: 79-82.

(3236) Glover, J. ; et al. 1959. Vitamin A-Sterinstoffwechsel. 5. Mitt. Die Sterinaufnahme durch Organellen der Dunndarmschleimhaut und die Art der Esterifizierung wahrend der Absorption. Biochem. J. 72: 82-87.

(3237) Glover, J. 1960. Die Umwandlung von β-Carotin in Vitamin A. Vitamins and Hormones. 18: 371-386.

(3238) Glover, J., and R. J. Walker. 1964. Aesorption and Transport of Vitamin A. Exp Exptl. Eye Res. 3: 374-382.

(3239) Glover, J., and R. J. Walker. 1964. Absorption and transport of vitamin A. Exptl. Eye Res. 3(4): 374-382.

(3240) Glowczynski, Zb. 1938. Vitamin A content of the seeds of canary grass (Phalaris canariensis). Bull. Intern. Acad. Polon. Sci. Class Sci. Math. nat. 1938B. II 115-128.

(3241) Gloyne, S. R., and D. S. Page. 1921. A, preliminary note on relationship between deficiency in vitamin A and tuberculosis. Tubercle. 3: 577.

(3242) Gobbi, I. 1937. Vitamin A-in diet of infants. Budapesti Orvosi. Ujsag. 35: 148-150.

(3243) Goch, H. ; et al. 1958. Vitamin A-Vitamin value of some canned products. Przemyst. Spozywczy. 12: 300-303.

(3244) Godal, A. 1940. Vitamin A-Dried fodder from fish. Tek. Ukeblad. 87: 73-74.

(3245) Godberg, L., and J. P. Smith. 1960. Vitamin A and E deficiencies in relation to iron overloading in the rat. J. Pathol. Bacteriol. 80: 173-180.

(3246) Godbole, N. N., and Sadgopal. 1935. Vitamin A-Comparative utility of the milks and ghees of the Indian cow and buffalo as human-food materials. Publ. Benares Hindu Univ. No. 1992, 23pp.

(3247) Goded, A. 1962. Vitamin A-Oxidized flavor of milk, causes and means of correction. Anales. Lactol. Quim. Agr. Zaragoza. 5: 23 pp.

(3248) Godtfredsen, E. 1941. Vitamin A-night vision and liver function in thyrotoxicosis; role of disturbance of vitamin metabolism. Hospitalstid. 10: 1765-1768.

(3249) Godtfredsen, E. 1941. Vitamin A-scotopic vision and liver function under thyrotoxicosis. Act. Med. Scandinav. 108: 261-271.

(3250) Goerner, A. 1938. Effect of dibenzanthracene on vitamin A and total lipid of mitochondria. Jour. Biol. Chem. 122(2): 529-538.

(3251) Goerner, A., and M. M. Goerner. 1938. Vitamin A and tumor mitochondria. Jour. Biol. Chem. 123(1): 57-59.

(3252) Goerner, A., and M. M. Goerner. 1938. Vitamin A und Leberzellenfumoren. J. Biol. Chemistry. 128: 559-565.

(3253) Goerner, A., and M. M. Goerner. 1939. Vitamin A-influence of carcinogenic compound on hepatic storage. J. Nutrition. 18: 441-446.

(3254) Goerner, A., and M. M. Goerner. 1939. Vitamin A and liver cell tumors. Jour. Biol. Chem. 128(2): 559-565.

(3255) Goerner, A., and M. M. Goerner. 1943. Vitamin A and the toxic action of dibenzanthracene on the tissues. Cancer Research. 3: 833-838.

(3256) Gogoasa, V. ; et al. 1961. The concentration of vitamin A in the liver of hens from enzootic areas of avian cholera. Lucrarile Stintifice Inst. Patol. Igiena Animala II: 233-241.

(3257) Gogolashvili, L. A. 1968. Vitamin A-On the avocado crop. Pishchevaya Tekhnologiya. 2: 25-28.

(3258) Goitia, J. U. 1942. Vitamin A-Therapy of erosions of uterine cervix due to estrogen insufficiency, avitaminosis or hypovitaminosis, with report of cases. Med. Espan. 7: 602-606.

(3259) Goichiro, K. 1950. Utilization of vitamin A in entrails of fishes. XIX. Distribution of vitamin A in entrails of fishes. Jour. Fermentation Tech. 28(7): 293-299.

(3260) Goichiro, K. 1950. Studies on vitamin A in eyeballs of fishes. II. Quantity of vitamin A in eyeballs of fishes. Jour. Fermentation Tech. 28(7): 287-293.

(3261) Goldberg, H. K., and K. Schlivek. 1941. Necrosis of the cornea due to vitamin A deficiency. Arch. Ophthalmol. 25(1): 122-127.

(3262) Goldberg, L., and J. P. Smith. 1960. Vitamin A and E deficiencies in relation to iron overloading in the rat. Jour. Path. and Bact. 80(1): 173-180.

(3263) Goldblatt, H., and K. M. Soames. 1923. Vitamin A-Studies on the fat-soluble growth-promoting factor. I. Storage. II. Synthesis. Biochem. J. 17: 446-453.

(3264) Goldblatt, H., and M. Banischek. 1927. Vitamin A-Mangel und Metaplasie. Journ. Exp. Med. 46: 699-707.

(3265) Goldbloom, A. A. ; et al. 1948. Vitamin A-Malnutrition and vitamin deficiency in recently released prisoners of war. Am. J. Digestive Diseases. 15: 115-118.

(3266) Goldhaber, P. 1963. Vitamin A-Some chemical factors influencing bone resorption in tissue culture. Publ. Am. Assoc. Advan. Sci. 75: 609-636.

(3267) Goldhaber, P. 1965. Vitamin A-Heparin enhancement of factors stimulating bone resorption in tissue culture. Science. 147(3656): 407-408.

(3268) Goldhammer, H., and F. M. Kuen. 1933. The vitamin A reaction with antimony trichloride. II. Spectroscopic investigation of some chromogens. Biochem. Z. 267: 406-416.

(3269) Golding, J. 1921. Die Beziehungen des fettloslichen Faktors zu Rachitis und Wachstum bei Schweinen. Biochemical Journ. 16: 394-402.

(3270) Golding, J. 1925. Vitamin A-Vitamins in agriculture. Agr. Progress. 2: 14-17.

(3271) Golding, J. ; et al. 1926. Vitamin A-The influence of the cow's diet on the fat-soluble vitamins of winter milk. Biochem. Jour. 20(6): 1306-1319.

(3272) Goldsmith, G. A. 1962. Vitamin A deficiency: medical aspects. J. Amer. Med. Wom. Assoc. 17: 399-405.

(3273) Goldsmith, T. H., and L. T. Warner. 1964. Vitamin A in the vision of insects. Jour. Gen. Physiol. 47(3): 433-441.

(3274) Goldsmith, T. H. ; et al. 1964. Empfindlichkeit von Visualrezeptoren bei Carotinoidmangelfliegen: Ein Vitamin-A-Mangel bei Invertebraten. (Science (Washington) 146: 65-67.

(3275) Goldzier, S. E. II. ; et al. 1952. Vitamin A-hypervitaminosis. J. Pediat. 41: 198-201.

(3276) Goliarkin, F. E. 1941. Influence of vitamin "A" on appearance of sexual desire and on development of embryo in sows. Proc. Lenin. Acad. Agric. Sci. U.S.S.R. 1941(9): 33-36.

(3277) Goll, H. 1941. Vitamin A-keratomalacia due to deficiency in infant. Munchen. Med. Wchnschr. 88: 1212.

(3278) Goll, H., and L. Fuchs. 1942. The vitamin A reserves of the infant. Munch. Med. Wochschr. 89: 397-400.

(3279) Goll, H. 1942. Vitamin A-relation between keratomalacia and content of infant's diet. Arch. F. Kinderh. 125: 144-153.

(3280) Gologorskii, B. S. 1948. Vitamin A and carotene in milk. Gigiena i Sanit. 13(4): 21-26.

(3281) Golota, V. Ya. 1964. Vitamin A-Pruritis vulvae of neurogenic origin. Akusherstvo Ginekol. 40(5): 126-129.

(3282) Golovchenko, G. A. 1963. Effect of vitamin A on zinc content and zinc metabolism in leukocytes and erythrocytes of white rats. Materialy Konf. Molodykh. Nauchn. Rabotn. Azerb. Med. Inst., Daku, Sb. 2: 31-34.

(3283) Golovin, D. I. 1956. Vitamin A-morphogenesis of changes of epithelial cells in avitaminosis A. Arkh. Pat. (no. 1). 18: 102-103.

(3284) Gomez, J. ; et al. 1953. Vitamin A and dermatologic disorders. Rev. Clin. Espan. 50: 124-129.

(3285) Gondos, M. ; et al. 1960. Vitamin A-Influence of nutrition with various contents of carotene on the quality of cow milk. Probleme Zootehnice Si. Vet. 9(2): 7-19.

(3286) Goni, B. 1945. Vitamin A-hypovitaminosis in infant; test of keratinization of conjunctiva (xerosis and keratomalacia). Rev. Chilena De Pediat. 16: 745-783.

(3287) Gontzea, I., and M. Hussar. 1943. Experimental investigations on the relationships between vitamin A and thyroxine. I. The effect of vitamin A and of thyroxine on the basal metabolism; experiments on small animals. Vitamine u. Hormone. 4: 131-141.

(3288) Gonzalez, A. C., and J. J. B. Nunez. 1941. Carotenoids and vitamin A. Arch. De. Med. Int. 7: 101.

(3289) Gonzalez, M. 1964. Vitamin A-Dietary requirements of Venezuelans and their current consumption. Arch. Venezolanos Nutr. 14(2): 191-210.

(3290) Gonzalo, C. 1946. Comparison of absorption of vitamin A after oral and intramuscular administration in normal children. Jour. Pediatrics. 28(2): 191-192.

(3291) Goodall, A., and J. K. Slater. 1936. Vitamin A-treatment of disseminated sclerosis as deficiency disease; 50 cases. Edinburgh, Med. J. 43: 368-374.

(3292) Goodman, DeWitt S. ; et al. 1964. Absorption and metabolism of vitamin A in the rat. J. Clin. Invest. 43(6): 1232-1233.

(3293) Goodman, DeWitt S., and H. S. Huang. 1965. Biosynthesis of vitamin A with rat intestinal enzymes. Science. 149(3686): 879-880.

(3294) Goodman, DeWitt S. ; et al. 1965. Tissue distribution and metabolism of newly absorbed vitamin A in the rat. J. Lipid Res. 6(3): 390-396.

(3295) Goodman, DeWitt S. ; et al. 1966. Mechanism of the biosynthesis of vitamin A from β-carotene. J. Biol. Chem. 241(9): 1929-1932.

*(3296) Goodman, DeWitt S. ; et al. 1966. The intestinal absorption and metabolism of vitamin A and β-carotene in man. J. Clin. Invest. 45(10):1615-1623.

(3297) Goodman, DeWitt S. ; et al. 1967. Vitamin A-The enzymatic conversion of alltrans β-carotene into retinal. J. Biol. Chem. 242(15): 3543-3554.

(3298) Goodman, D. S., 1967. The ,metabolism of beta-carotene and vitamin A. Intestinal absorption and metabolism in the rat and in man: B. Biosynthesis of vitamin A with rat intestinal enzymes. Progr. Biochem. Pharmacol. 3: 487-497.

(3299) Goodman, Dewitt, S., 1969. Vitamin A-Retinol transport in human plasma. Amer J. Clin. Nutr. 22(7): 910-911.

(3300) Goodman, Dewitt, S., 1969. Biosynthesis of vitamin A from beta-carotene. Amer. J. Clin. Nutr. 22(7): 963-965.

(3301) Goodman, Herman., 1938. Vitamin A-Dermatologic symptoms of vitamin deficiencies. Archives. Dermatol. Syphilol. 38: 389-400.

(3302) Goodrich, R. D.; et al., 1966. Vitamin A and carotene for cattle and sheep. Minn., Univ., Agr. Ext. Serv., Ext., Bull. No. 334: 3 pp.

(3303) Goodwin, G. P., 1934. Vitamin A-cutaneous manifestation of deficiency. Brit. Med. J. 2: 113-114.

* (3304) Goodwin, R. F. W., and A. R. Jennings., 1958. Mortality of newborn pigs associated with a maternal deficiency of vitamin A. Jour. Comp. Pathol. and Therap. 68(1): 82-95.

(3305) Goodwin, T. W., and R. A. Morton., 1946. Determination of carotene and vitamin A in butter and margarine. Analyst 71: 15-20.

(3306) Goodwin, T. W., and B. A. Gregory., 1948. Studies in vitamin A. VII. Carotene metabolism in herbivores. Biochem. J. 43: 505-512.

(3307) Goodwin, T. W., and A. A. Wilson., 1949. Studies in vitamin A. XIV The alleged mobilization of vitamin A by adrenaline. Biochem. Jour. 45(3): 370-372.

(3308) Goodwin, T. W., 1949. The biochemistry of locusts. 2. Carotenoid distribution in solitary and gregarious phases of the African migratory locust (Locust migratoria migratoroides R. and F.) and the desert locust (Schistocerca gregaria Forsk). Biochem. Jour. 45(4): 472-478.

(3309) Goodwin, T. W., 1951. Vitamin A-active substances. Brit. J. Nutrition 5:,94-100.

(3310) Goodwin, T. W., and A. A. Wilson., 1951. Studies in vitamin A. XV. Variations in the serum beta-carotene and vitamin A levels of cows near parturition. Biochem. J. 49: 499-503.

(3311) Goodwin, T. W., and G. R. Williams., 1952. Studies in vitamin A. XVIII. Effect of vitamin A deficiency on the pyruvate and γ-ketoglutarate levels of rat blood. Biochem. J. 51: 708-714.

(3312) Gopalan, C.; et al., 1960. Studies of vitamin A deficiency in children. Amer. Jour. Clin. Nutrition. 8(4): 833-840.

(3313) Gorb, V., 1948. The influence of protein concentrates and vitamin A on the growth and health condition of Romanov lambs. Doklady Veseoyuz. Akad. Sel'sko-Khoz. Nauk im. V. I. Lenina 13(5): 40-46.

(3314) Gorbach, G., and H. Pfudl., 1952. Micro method for the determination of vitamin A in oil seeds, oils, and filter cakes. Fette u. Seifen 54: 334-337.

(3315) Gorbunova., V.; et al., 1966. Vitamin A-Haltbarkeit von Vitaminen in vitaminierter Milch. Moloc. Prom. 27(5): 22-23.

(3316) Gordon, B., and E. Flanders., 1931. Vitamin A-Observations on persons with potential vitamin deficiency. Am. Rev. Tuberculosis 23: 84-91.

(3317) Gordon, R. S., and L. J. Machlin., 1959. A method of evaluation of antioxidants based on vitamin A protection. Poultry Sci. 38(6): 1463-1467.

(3318) Gordon, S. R., 1957. Vitamin A-Bekampfung der Thrombosegefahr bei Rauchern. U. S. P. 3 193 461.

(3319) Gordonoff, T. and F. Ludwig., 1935. Vitamin A-Uber den Einfluß der Vitamine auf das Wachstum von Gewebe und von Impfgeschwilsten. Z. Vitaminforschg. 4: 213-223.

(3320) Gordonoff, T., and F. Ludwig., 1935. Vitamin A.- Uber die Bedeutung der Vitamine fur die Krebstherapie. Schweiz. Med. Wschr. 66: 1129-1130.

(3321) Gordonoff, T., and F. Ludwig., 1938. Vitamin A-Vitamine und Carcinom. Z. Krebsforschg. 47: 421-426.

(3322) Gori, Roberto, de.; et al., 1962. Bestimmung von Vitamin A in Butter, Kase und Milch. Boll. Lab. Chim. Provinc. 13: 319-335.

* (3323) Gorlin, R. J., and A. P. Chaudhry., 1959. The effect of hypervitaminosis A upon the incisor and molar teeth, the alveoiar bone, and temporomandibular joint of weaning rats. J. Dent. Res. 38: 1008-1015.

(3324) Gorner, F.; et al., 1970. Changes in carotenes, vitamin A and vitamin B6 content of milk during the freeze drying process. Bratisl. Lek. Listy. 53: 61-71.

(3325) Gaetano, G., 1950. Alkaliphosphataseaktivitat des Serums b ei mit erhohten Dosen von Fischlebertran behandelten Ratten. Acta Ci. Venezolana 1: 21-23.

(3326) Gorter, E. J., en J. P. Spruyt., 1939. De vitamine-A- werking van enkele plantaardige Indische voedingsmiddelen, gemeten aan de hand van de rattengroeiproef. Geneesk. Tijdschr. Nederland.-Indie 79(10): 588-600.

(3327) Gorter, F. J., and J. P. Spruyt., 1939. Vitamin A determinations by means of rat growth tests. Arch. neerland. Physiol. 24: 122-132.

(3328) Gorter, F. J., and J. P. Spruyt., 1939. Vitamin A effect of certain Indian vegetable foods measured by means of growth test on rats. Geneesk. Tijdschr. v. Nederland. Indie. 79:588-599.

(3329) Gorter, F. J., 1939. Vitamin A-tests for hemeralopia in relation to hypovitaminosis among Javanese villagers. Geneesk. Tijdschr. v. Nederland-Indie. 79: 1181-1192.

(3330) Goss, H., and H. R. Guilbert., 1939. The minimum vitamin A and carotene requirement of the rat. Jour. Nutrition 18(2): 169-179.

(3331) Goth, E., 1938. Vitamin A-treatment of hyperthyroidism. Orvosi Hetil. 82: 271-273.

(3332) Gothlin, G. Fr., 1938. Effect of separate vitamins on the intravital oxidations. Experimental results on the influence of pure vitamins A, $B_1$, $B_2$, C and D on the oxygen consumption of rats and guinea pigs. Skand. Arch. Physiol. 80: 133-141.

(3333) Gottfried, S. P.; et al., Vitamin A-Chemical studies in children with the nephrotic syndrome. Am. J. Diseases Children 74: 283-304.

(3334) Goubern, M.; et al., 1970. Acid deoxyribonuclease activity and testicular degeneration in rats with vitamin A deficiency. C. R. Acad. Sci. (D) (Paris) 271: 357-360.

(3335) Gould, R. G., Jr., and A. F. Thompson, Jr., 1932. Vitamin A - Die Synthese einiger ungesatigter Verbindungen aus beta-Jonon und Tetrahydrojonon. J. Amer. Chem. Soc. 57:340-345.

(3336) Gounelle, H., and Y. Raoul., 1941. Teneur en vitamine A et en carotene du sang des donneurs de deux centres de transfusions de Paris. Compt. Rend. Soc. Biol. 135: 611-615.

(3337) Gounelle, H.; et al., 1941. Vitamin A-comparison of results obtained by determination of vitamin in blood and testing of retinal light sensitivity by means of Chevallier's photometer in individuals fed on same diet; difficulties of interpretation of certain cases. Compt. Rend. Soc. de Biol. 135: 1286-1289.

(3338) Gounelle, H., and J. Marche., 1943. Vitamin A and nicotinic and ascorbic acids of the blood in hepatic functional insufficiency. Compt. Rend. Soc. Biol. 137: 672-673.

(3339) Gounelle, H., and Serge Bonfils., 1948. Absence of hypotensive action of crystallized vitamin A acetic ester. Compt. Rend. Soc. Biol. 142: 882-884.

(3340) Gounelle, H.; et al., 1951. Alleviation by fish oils, rich in vitamin A, of the toxic effects of calciferol to the rat. Rev. Path. Comparee et Hyg. Gen. 51: 403-406.

(3341) Gounelle, H.; et al., 1951. Inefficiency of snythetic vitamin A in alleviating toxic effects of calfiferol in the rat. Rev. Path. Comparee et Hyg. Gen. 51: 480-481.

(3342) Gounelle, H., T. and R. Paulais. 1951. Protective action of fish-liver oil rich in vitamin A against calciferol intoxication in rats. Oral administration. Compt. Rend. Soc. Biol. 145: 540-541.

(3343) Gounelle, H.; et al., 1951. Die hemmende Wirkung der Lebertrane mit hohem Gehalt an Vitamin A gegenuber der $D_2$-Hypervitaminosis ist unabhangig von der Speicherung dieses Vitamins in der Leber. C. R. Seances Soc. Biol. Filiales 145: 877-879.

(3344) Gounelle, H.; et al., 1952. Die Resorption des Retinens durch den Darm und seine rapide Umwandlung von Vitamin A beim Menschen. C. R. Seances Soc. Biol. Filiales 146: 523-525.

(3345) Gounelle, H.; et al., 1952. The acetate of synthetic vitamin A does not exert an antagonistic action toward calciferol intoxication in the rat. Compt. Rend. Soc. Biol. 146: 711-714.

(3346) Gounelle, H.; et al., 1955. Assays of hypervitaminemia A and E in hepatology, particularly in liver cirrhosis. Voeding 16: 380-392.

(3347) Gounelle, H., and M. Blondin., 1955. Effects of colitis upon nutrition as shown by the vitamin A tolerance test. Arch. Mal. Appareil Digest. et Nutr. 44(5): 661-665.

(3348) Gouveia, A. J. A. de., 1937. Spectrophotometric determination of vitamin A. Rev. Fac. Cienc. (Coimbra)6: 191-199.

(3349) Gouveia, A. J. A. de., and Alfredo P. Gouveia. 1950. Chemical study of the fish of the Portuguese coast. I. Analytical study of the species Sardina pilchardus and Trachurus Trachurus. Rev. Faculdade Cienc., Univ. Coimbra 19: 136-150.

(3350) Gouveia, A. J. A. de.; et al., 1956. Vitamin A-Chemical study of fish from the coast of Angola. I. Analytical study of some species from the fisheries at Luanda. Garcia Orta. 4: 531-555.

(3351) Gova-Pena, J., and M. Villaverde., 1940. Vitamin A and its hypotensive action; therapeutic use in cases. Vida Nueva 46: 178-185.

(3352) Govindarajan, S. V., and B. N. Banerjee., 1940. Vitamin A study of ghee. IX. Recovery of reversibly oxidized vitamin A by treatment with hydrogen under pressure. Indian J. Vet. Sci. 10: 335-345.

(3353) Grab, W., and T. Moll., 1939. Vitamin A-difference in efficacy of vitamin concentrates from fish liver oils; assay of "vogan". Klin. Wchnschr. 18: 563-566.

(3354) Grab, W., 1939. Vitamin A-relation between chemical form and activity in concentrates of fish liver oils; standardization of preparations. Arch. f. Exper. Path. u Pharmakol. 193: 170-210.

(3355) Gracheva, A. G., 1969. Vitamin A and carotene content in the blood of children during pneumonia. Pediatriya 48(3): 9-14.

(3356) Grados, Yolanda E. Vega., 1956. Determination of vitamin A and carotene in the blood plasma of; newborn infants. Anales Fac. Farm. y. Bioquim., Univ. Naci. Mayor San Marcos (Lima) 7: 473-483.

(3357) Grafe, H. K., 1956. Do the vitamin A and C levels of foods and beverages stored in aluminum containers change during prolonged bicycle transportation? Ernahrungsforschung I: 133-134.

(3358) Grafe, H. K., and I. Rake., 1961. Vitamin A-Ernahrungssoziologische Unterschung uber den effektiven Lebensmittelverzehr von Werktatigen aus 5 gro en Industriebetrieben. Ernahrungsforschung 6: 96-118.

(3359) Gramazio, V.; et al., 1952. Influence of vitamin A on the intradermal tuberculin reaction of patients with pulmonary tuberculosis. Acta Vitaminol. 6: 174-181.

(3360) Gramazio, V.; et al., 1953. Tuberculous infection of the guinea pig and tuberculin intradermal reaction after treatment of high doses of vitamin A. Arch. Sci. Med. 95: 448-490.

(3361) Granberg, W. J., 1949. Vitamin A-Whaling. Fish Meal and Oil Ind. 1(9): 8-9.

(3362) Grangaud, R., and R. Massonet., 1948. Activity of the oil of the crab on the vitamin A-deficient rat. Compt. Rend. 227: 568-570

(3363) Grangaud, R., 1949. Vitamin A and factors having its effects; recent biochemical requirements. Algerie Med. 53: 131-138.

(3364) Grangaud, R., and R. Massonet., 1949. Vitamin activity of the oil of the crustacean Penaeus foliaceus on the vitamin A-deficient rat. Bull. Soc. Chim. Biol. 31: 231-234.

(3365) Grangaud, R.; et al., 1949. Vitamin A content of the viscera of the hake, Meriucius vulgaris. Compt. Rend. Soc. Biol. 143: 1181-1183.

(3366) Grangaud, R.; et al., 1950. Vitamin A factors of oil of Penaeidae crustaceans. Bull. Soc. Chim. Biol. 32: 245-249.

(3367) Grangaud, R., and R. Massonet., 1955. Untersuchungen uber die Biogenese des Vitamins A der Fische. 1. Mitt. Das Astaxanthin, Provitamin A fur Gambusia Holbrooki Grd. Arch. Sci. Physiol. 9: 245-256.

(3368) Grangaud, R., and T. Conquy., 1958. Vitamin A and progesterone. Compt. Rend. Soc. Biol. 152: 1230-1234.

(3369) Grangaud, R., and J. Pierre Moatti., 1958. Neubildung von Vitamin $A_2$ bei Gambusia holbrockil Grd. nach Verabreichen von beta-Carotin oder Vitamin $A_1$. C. R. Seances Soc. Biol. Filiales 152: 1235-1237.

(3370) Grangaud, R., and Therese Conquy, 1958. Die Wirkungen von Progesteron-Injektionen auf Vitamin-A-frei ernahrte weibliche Albinoratten. C. R. Hebd. Seances Acad. Sci. 246: 3274-3277.

(3371) Grangaud, R., and M. Nicol. 1959. Current biochemical problems involving vitamin A., Algerie Med. 63: 831-840.

(3372) Grangaud, R.; et al., 1959. Comparison of the action of pregnenolone and progesterone on vitamin A deficient female white rats. Compt. Rend. 249: 931-933.

(3373) Grangaud, R.; et al., 1959. Progesterone and weight increase in young albino rats deprived of vitamin A. Compt. rend. Soc. Biol. 153: 1327-1330.

(3374) Grangaud, R.; et al., 1960. Vitamin A und Steroidhormone. Arch. Sci. physiol. 14: 131-142.

(3375) Grangaud, R., and M. Nicol., 1960. Vitamin-A-aktuelle biochemische Aspekte., Biochim. Med. 22: 165-184.

(3376) Grangaud, R.; et al., 1960. Action of progesterone in male rats deprived of vitamin A. Compt. Rend. Soc. Biol. 154: 115-118

(3377) Grangaud, R.; et al., 1960. Development of vitamin A deficiency in the ovariectomized female albino rat. Compt. Rend. Soc. Biol. 154: 587-590.

(3378) Grangaud, R.; et al., 1960. Vitamin A und Progesteron bei der ovarektomierten Albinoratte. C. R. Seances Soc. Biol. Filiales 154: 973-976.

(3379) Grangaud, R.; et al., 1960. Androstenedione, transdehydroandrosterone and progesterone in the vitamin A deficient white rat. C. R. Acad. Sci. 250: 3725-3727.

(3380) Grangaud, R.; et al., 1961. Vergleich der Wirkungen von Pregnenolon und Progesteron bei der wei en Vitamin-A-Mangelratte: Quantitative Untersuchung. C. R. Seances Soc. Biol. Filiales 155: 1273-1276.

(3381) Grangaud, R.; et al., 1961. Umwandlung von Astaxanthin in Vitamin A bei der Albinoratte; Neubildung in vivo und in vitro. C. R. Hebd. Seances Acad. Sci. 252: 1854-1856.

(3382) Grangaud, R., Nicol, M., 1961. Steroid hormones and the biosynthesis of mucopolysaccharides in the vitamin-A-deficient rat: action of progesterone in vitro. C. R. Acad. Sci. 252: 4189-4191.

(3383) Grangaud, R.; et al., 1961. Umwandlung von Astaxanthin in Vitamin A durch Darmschleimhaut von Gambusia holbrooki Grd. in vitro. C. R. Hebd. Seances Acad. Sci. 253: 336-338.

(3384) Grangaud, R.; et al., 1961. Androstenedione and trans-dehydroandrosterone in the white rat deprived of vitamin A. Compt. Rend. Soc. Biol. 155: 476-480.

(3385) Grangaud, R.; et al., 1961. Steroid hormones and muscopolysaccharide biosynthesis in the vitamin A-deficient rat; in vitro comparison of the effects of pregnemolone and progesterone. C. R. Acad. Sci. 253: 2265-2267.

(3386) Grangaud, R.; et al., 1961. Vitamin A and androgenic steroids. Arch. Sci. Physiol 15: 263-275.

(3387) Grangaud, R.; et al., 1961. Untersuchung von Vitamin A und Retinen der Augen von Gambusia holbrooki. Grd. C. R. Seances Soc. Biol. Filiales. 155: 2150-2153.

(3388) Grangaud, R.; et al., 1962. Vitamins A and related substances in piokilotherms. Ann. Nutr. (Paris) 16(5): Rapp. A91-A124.

(3389) Grangaud, R.; et al., 1962. Umwandlung von Astaxanthin in Vitamin A durch das Intestinum von Gambusia holbrooki Grd. in vitro: Beweis fur die intermediare Bildung von beta-carotin. C. R. Hebd. Seances Acad. Sci. 254: 579-581.

(3390) Grangaud, R.; et al., 1963. Corticoidgenese bei der weißen Vitamin-A-Mangel-ratte. In vitro-Versuche. C. R. Seances Soc. Biol. Filiales 157: 2173-2177.

(3391) Grangaud, R.; et al., 1964. Chemische Konstitution und Aktivitat von Vitamin A. Arch. Sci. Physiol 18: 235-251.

(3392) Grangaud, R.; et al., 1964. The effect of stimulation by the pituitary gland on the adrenal secretion of white rats under conditions of vitamin A deficiency; investigations in vitro. Compt. Rend. 258(3): (Groupe 12) 1083-1085.

(3393) Grangaud, R.; et al., 1965. Total activity of the adrenal3-beta-hydroxy steroid dehydrogenase and $\Delta 5$ isomerase in vitamin A-deficient albino female rat. Compt. Rend. 260(8): 2339-41.

(3394) Grangaud, R.; et al., 1965. Enzymic activities of the adrenal cortex of vitamin A-deficient rats. Bull. Soc. Sci. Bretagne 40(1-2): 97-101.

(3395) Grangaud, R.; et al., 1966. Activity of adrenocortical delta 5-3 beta-hydroxysteroid dehydrogenase in white rats deficient in vitamin A. Arch Sci. Physiol. (Paris) 20: 123-33.

(3396) Grangaud, R., and Marc Nicol., 1966. Action of retinal on the in vitro conversion of trans-dehydro-epiandrosterone to androstenedione by the rat adrenal cortex. Compt. Rend., Ser. D 263(4): 446-448.

(3397) Grangaud, R., and Marc Nicol., 1966. Action of retinal on the in vitro transformation of pregnenolone into progesterone by the adrenal cortex of rats. Compt. Rend., Ser. D 262(25): 2640-2642.

(3398) Grangaud, R.; et al., 1965. Studies on the enzymatic activities of t the adrenal cortex in the white rat deficient in vitamin A. Soc. Sci. Bretagne Bull. 40(1/2): 97-101.

(3399) Grangaud, R.; et al., 1967. Adrenal cortical $\Delta 5$-3 $\beta$-hydroxysteroid dehydrogenase activity in white rats. Action of vitamin A. Proc. Int. Congr. Nutr., 7th 5: 617-621.

(3400) Grangaud, R.; et al., 1967. Vitamin A and biosynthesis of 17-alpha-hydroxyprogesterone by the adrenal cortex of the white rat. C. R. Seances Soc. Biol. Filiales. 16(8/9): 1814-1817.

(3401) Grangaud, R.; et al., 1969. Effect of vitamin A on enzymic conversion of the $\Delta 5 3\beta$ hydroxy - into $\Delta 4$-3-oxosteroids by adrenals of the rat. Amer. J. Clin. Nutr. 22(8): 991-1002.

(3402) Grangaud, R.; et al., 1970. Demonstration of the action of vitamin A on the conversion of delta 5-3 beta hydroxy into delta 4-3 oxo steroids by the adrenal cortex of white adult normal rats. C. R. Acad. Sci. (D) (Paris) 271: 1805-1808.

(3403) Granit, R., 1939. Relation between visual purple, sensitivity to light and vitamin A; intermediary process in dark adaptation. Nord. Med. (Finska Lak.-Sallsk. Handi.) 3: 2700-2709.

(3404) Granova, A. A., 1968. Effect of surface-active agents on the assimilation of vitamin A by chicks. Khim. Sel. Khoz. 6(5): 383-384.

(3405) Grant, A. B., and P. B. O'Hara., 1957. Der rachitogene Effekt von Vitamin A. New Zealand J. Sci. Technol. Sect. A. 38: 548-576.

(3406) Grant, F., 1937. Der Vitamin-A-und Cholesterinspiegel in seiner Bezichung zur Vitamin-A-Ausscheidung im Harn. Z. Klin. Med. 133: 168-177.

(3407) Grant, M. W., 1949. Vitamin A and carotene. Nature (London) 164(4162): 212-213.

(3408) Graves, H. C. H. 1942. The vitamin A value of carotene in vegetables. Chemistry & Industry 8-10.

(3409) Gravesen, K. J., 1967. Vitamin A and carotene in serum from healthy Danish subjects. Scand. J. Clin. Lab. Invest. 20(1): 57-62.

(3410) Gray, E. LeB.; et al., 1940. The state of vitamin A in the liver of the rat after feeding various forms of the vitamin. Jour. Nutrition 19(1): 39-46.

(3411) Gray, E. LeB.; et al., 1940. Intestinal absorption of vitamin A in the normal rat. Jour. Nutrition 20(1): 67-74.

(3412) Gray, E. L., and J. D. Cawley., 1940. Influence of structure on elimination maximum;structure of vitamin $A_2$. J. Biol. Chem. 134: 397-401.

(3413) Gray, E. LeB., and J. D. Cawley., 1942. The state of vitamin A in the liver of the rat. II. The effect of feeding the vitamin over extended periods. Jour. Nutrition 23(3): 301-307.

(3414) Gray, P. P., and I. Stone., 1939. Vitamin A-New method of preventing rancidity. Ascorbic acid (Vitamin C) and related compounds as antioxidants in preventing rancidity. Food Inds. 11: 626-628.

(3415) Greaves, J. D., and C. L. A. Schmidt., 1934. Absorption and utilization of beta-carotene in jaundiced and in chole dochhocolostomized vitamin A-deficient rats. J. Biol. Chem. 105: 31-32.

(3416) Greaves, J. D., and C. L. A. Schmidt., 1935. Absorption and utilization of carotene and vitamin A in choledochocolonostomized vitamin A-deficient rats. Am. J. Physiol. 111:492-501.

(3417) Greaves, J. D., and C. L. A. Schmidt., 1935. Uber die Ausutzung des Carotins durch gelbsuchtige und mit Phosphor behandelte Ratten mit Vitamin-A-Mangel. Amer. J. Physiol. 111: 502-506.

(3418) Greaves, J. D., and C. L. A. Schmidt., 1936. Vitamin A-requirements of rat. Am. J. Physiol. 116: 456-467.

(3419) Greaves, J. D., and C. L. A. Schmidt. 1937. Relation of certain bile acids to absorption of beta-carotene in the rat. Proc. Soc. Exptl. Biol. and Med. 36(4): 434-437.

(3420) Greaves, J. P., and J. Tan., 1966. Vitamin A and carotene in British and American Diets. Brit. J. Nutr. 20(4): 819-823.

(3421) Green, B. J.; et al., 1955. The effect of vitamin A deficiency on the cholesterol levels of the plasma and liver of the rat. Biochem. Jour. 61(3): 447-453.

(3422) Green, B.; et al., 1957. Cholesterin- und Leber Vitamin A bei mannlichen und weiblichen Ratten. Biochem. J. 65: 33P.

(3423) Green, B.; et al., 1957. Cholesterol and liver vitamin A in male and female rats. Biochem. Jour. 67(2): 235-238.

(3425) Green, E. J., 1964. Wechselbeziehungen zwischen den Vitaminen A. Exptl. Eye Res. 3: 388-391.

(3424) Green, H. N. and E. Mellanby., 1928. Die Bedeutung des Vitamins A als infektionsverhinderndes Mittel. Brit. Med. Journ II: 691-696.

(3426) Green, H. N., and E. Mellanby., 1930. Carotene and vitamin A; anti-infective action of carotene. Brit. J. Exper. Path. 11: 81-89.

(3427) Green, H. N.; et al., 1931. Diet as prophylactic agent against puerperal sepsis with special reference to vitamin A as anti-infective agent. Brit. Med. J. 2: 595-598.

(3428) Green, H. N., 1932. Uber den Vitamin-A-Gehalt der Leber bei Puerperalsepsis. Lancet 223: 723-726.

(3429) Green, H. N., 1934. Fat metabolism in vitamin A deficiency. The blood-serum esterase. The utilization of fat and the desaturation of fat in the liver. Biochem. Jour. 28(1): 16- 30.

(3430) Green, H. N., 1934. Vitamin A-fat metabolism in deficiency; utilization of fat and desaturation of fat in liver. Biochem. J. 28: 25-30.

(3431) Green, J., 1950. Die Reaktion von Vitamin D und anderen Stoffen mit Jodtrichlorid. Biochemic. J. 47: 1-2.

(3432) Green, J., 1951. Studies on the analysis of vitamin D. 2. The analytical purification of vitamin D by differential solubility, precipitation reactions, and chromatography. Biochem. Jour. 49(1): 45-54.

(3433) Green, J., 1951. Analysis of vitamins D; experiments on separation of vitamin D from vitamin A and other substances by condensation technic and selective irradiation. Biochem. J. 49: 54-58.

(3434) Green, J., 1951. Analysis of vitamins D. IV. The irradiation of ergoesterol and 7-dehydrocholesterol and the analysis of the products for calciferol, vitamin $D_3$, and component sterols. Biochem. J. 49: 232-243.

(3435) Green, J., 1951. Studies on the analysis of vitamin D. 5. The chemical determination of vitamin D in fish-liver oils and other materials containing vitamin A. Biochem. Jour. 49(2): 243-245.

(3436) Green, J., and D. O. Singleton., 1954. Rapid chromatographic method for the determination of vitamin A in whale-liver oils. Analyst 79: 431-434.

(3437) Green, J.; et al., 1961. Untersuchungen uber Vitamin E. 8. Mitt. Vitamin E, Ubichinon und Ubichromenel im Kaninchen. Biochem. J. 79: 108-111.

(3438) Green, J.; et al., 1963. Paper chromatography and chemical structure. III. The correlation of complex and simple molecules. The calculation of $R_M$ values for tocopherols, vitamins K, ubiquinones, and ubichromenols from $R_M$ (phenol). J. Chromatog. 10(2): 158-183.

(3439) Green, J., 1964. Interrelations between vitamins A and E. Exptl. Eye Res. 3(4): 388-391

(3440) Green, J., 1966. Antagonists of vitamin A. Bibl. Nutr. Dieta 8:33-43.

(3441) Green, J. 1965. Interrelations between vitamins A and E. Exptl. Eye Res. 3(4): 388-391.

(3442) Green, J. 1966. Antagonists of vitamin A. Bibl. "Nutr. Dieta". 8: 33-43.

(3443) Green, J. ; et al. 1967. Vitamin E and stress. VII. The interrelations between polyunsaturated fatty acid stress, vitamin A, and vitamin E in the rat and the chick. Brit. J. Nutr. 21(4): 845-864.

(3444) Green, M. 1967. Vitamin A-Benign intracranial hypertension (pseudotumor cerebri). Pediat. Clin. N. Amer. 14: 819-830.

(3445) Greene, M. R. 1933. The effects of vitamins A and D on antibody production and resistance to infection. Amer. Jour. Hyg. 17(1): 60-101.

(3446) Greenberg, R., and H. Popper. 1941. Demonstration of vitamin A in the retina by fluorescence microscopy. Am. J. Physiol. 134: 114-118.

(3447) Greenberg, R., and H. Popper. 1941. Differentiation between vitamin $A_1$ and vitamin $A_2$ by means of fluorescence microscopy. J. Cellular Comp. Physiol. 18: 269-272.

(3448) Greenberg, R. ; et al. 1957. Uberfuhrung von Carotin in Vitamin A durch die Talgdrusen der Haut. A. M. A. Arch. Dermatol. 76: 17-23.

(3449) Gregory, M. E. ; et al. 1955. Vitamin A-The composition of the milk of the blue whale. Jour. Dairy Res. 22(1): 108-112.

(3450) Greiner I., and J. Mosonyi. 1930. Vitamin A-Influence of vitamins on the chemical composition of human milk. Jahrb. Kinderheilk. 129: 282-292.

(3451) Grelet, N. 1939. Intraperitoneal scleroses provoked by contact with diatomaceous earth in rats deprived of vitamin A. Compt. Rend. Soc. Biol. 131: 1005-1008.

(3452) Grelet, N. 1940. Vitamin A Pleural and Peritoneal reactions produced by various oils with or without vitamin A or its oxidation products. Compt. Rend. Soc. De Biol. 134: 527-531.

(3453) Grewal, K. S. 1933. Vitamin A content of ghee. Quart. J. Pharm. Pharmacol. 6: 650-654.

(3454) Grewal, K. S., and B. D. Kochhar. 1938. Vitamin A contents in ghee. Indian J. Med. Research. 25: 623-631.

*(3455) Grey, R. M. ; et al. 1964. Vitamin A-Zisternaler und intraventrikularer Druck der Cerebrospinalflussigkeit bei Kuhen mit chronischer Hypervitaminosis A. J. Dairy Sci. 47: 783-788.

*(3456) Grey, R. M. ; et al. 1965. Vitamin A-Pathology of skull, radius and rib in hypervitaminosis A of young calves. Path. Vet. (Basel). 2: 446-467.

(3457) Gribetz, D. ; et al. 1951. Vitamin A poisoning. Pediatrics. 7(3): 372-385.

(3458) Gribetz, D., and A. Kanof. 1951. Vitamin A-chylous ascites in infancy with report of case with absorption studies. Pediatrics. 7: 632-641.

(3459) Gridgeman, N. T., and H. Wilkinson. 1938. Vitamin A-night blindness and vitamin deficiency; use of bio-photometer. Lancet. 1: 905-907.

(3460) Gridgeman, N. T. ; et al. 1940. The effect of the basal diet on the biological assay of vitamin A. J. Soc. Chem. Ind. 59: 120-125.

(3461) Gridgeman, N. T. ; et al. 1940. Vitamin A-Estimation of vitamin D in margarine. Analyst. 65: 493-496.

(3462) Gridgeman, N. T. 1943. The technique of the biological vitamin A assay. Biochem. Jour. 37(1): 127-132.

(3463) Gridgeman, N. T. 1944. The estimation of vitamin A. Publ., Lever Brothers and Unilever Ltd.; London, England.

(3464) Gridgeman, N. T. 1945. Vitamin A-estimation. Bull. Hyg. 20: 342-343.

(3465) Gridgeman, N. T. 1947. Recent work on the chemistry and estimation of vitamin A. II. Chemistry and Industry. 574-576.

(3466) Gridgeman, N. T. ; et al. 1948. Chromatographic estimation of vitamin A in whale-liver oil. Analyst. 73: 662-668.

(3467) Gridgeman, N. T. 1951. Spectrometric assay of vitamin A by geometric correction of absorption curves. Analyst. 76: 449-460.

(3468) Gridgeman, N. T. 1961. Determination of vitamin A; criticism of Tardif's method. J. Pharm. Sci. 50: 449.

(3469) Grieb, G. 1968. The colostrum period of the calf; the protein and vitamin A contents of colostrum and milk during the first 30 days of lactation. II. Vitamin A and carotene contents of colostrum and milk. Arch. Tierzucht. 11(5): 401-411.

(3470) Griesemer, R. D. ; et al. 1953. Nutritional influences on the physiology of the skin: the metabolism of vitamin A. Medicine. 32: 293-321.

(3471) Griffee, F. 1943. Vitamin A-Report of progress for year ending June 30, 1943. Maine Agr. Exptl. Sta. Bull. 420: 419-586.

(3472) Griffin, M. J. ; et al. 1970. Vitamin A inhibition of cortisol induction of HeLa alkaline phosphatase. Nature (Lond). 228: 762-763.

(3473) Griffiths, A. W. ; et al. 1967. Vitamin A-Dark adaptation in mongols. J. Ment. Defic. Res. 11: 23-30.

(3474) Griffiths, H. N. ; et al. 1933. The stability of vitamin A in cod-liver oil emulsions. Analyst. 58(683): 65-68.

(3475) Grifo, A. P. Jr., ; et al. 1960. Relative value of carotene and vitamin A fed at medium levels in a milk replacer. J. Dairy Sci. 43: 1003-1005.

(3476) Grifo, A. P. Jr., ; et al. 1961. Conversion of carotene from alfalfa and from water-dispersible gelatin beadlets to vitamin A by calves. Jour. Dairy Sci. 44(3): 556-558.

(3477) Grifo, A. P. Jr. ; et al. 1961. Availability to the calf of vitamin A from dry carriers with observations on some biochemical constituents in the aqueous humor. Bull. Connecticut Agric. Exptl. Sta. 365: 3-16.

(3478) Grignolo, A. ; et al. 1966. Vitamin A-Studies on the fine structure and the rhodopsin cycle of the rabbit retina in experimental degeneration induced by sodium iodate. Exptl. Eye Res. 5(1): 86-97.

(3479) Grigor'eva, L. V. ; et al. 1970. The influence of the functional state of the adrenal glands on the oxidative transformation of vitamin A and its concentration in the adrenals, liver and plasma of white rats. Vop. Med. Khim. 16: 300-306.

(3480) Grigorov, Kh. ; et al. 1962. Vitamin A, carotene, and vitamin C in cow, buffalo, sheep, and goat milks. Izv. Tsentr. Nauchnoizsled. Inst. po Zhivotnovudstvo "Georgi Dimitrov," Kostinbrod, Bulgar. Akad. Nauk. 13: 71-82.

(3481) Grigor'yants, N. N. ; et al. 1959. Ascorbic acid content in vegetables and grapes of the Turkmenian S. S. R. Izvest. Akad. Nauk. Turkmen. 5: 77-80.

(3482) Grimbergen, A. H. M., and J. P. Cornelissen. 1960. Der Vitamin-A-Stoffwechsel bei jungen Kuken. Landbouwkund. Tijdschr. 72: 667-674.

(3483) Grimbleby, F. H., and D. J. G. Black. 1950. Variations in the pigment and vitamin A contents of egg yolk. Brit. J. Nutrition. 4: 323-331.

(3484) Griminger, P. 1965. Vitamin K activity in chickens. Phylloquinone and menadione in the presence of stress agents. J. Nutr. 87(3): 337-343.

(3485) Grinker, R. R., and E. Kandel. 1933. Experimental vitamin (A, B B and B complex) deficiency: Histologic changes in the central nervous system. Arch. Neurol. and Psychiatr. 30(6): 1287-1297.

(3486) Grlic, Lj. 1952. Vitamin values of edible wild plants common in Yugoslavia. I. Ascorbic acid and carotene content of edible wild greens. Acta. Pharm. Jugoslav. 2: 112-125.

(3487) Groch, J. ; et al. 1966. Serum level of β-carotene and vitamins A and E in humans of various age groups. Sb. Ved. Pr., Lek. Fak. Karlovy Univ. Hradci Kralove. 9(4-5): 597-600.

(3488) Groen, J. ; et al. 1947. The vitamin and nitrogen metabolism in typhoid fever patients. Voeding. 8: 1-26.

(3489) Groh, J. 1966. Serum-level of β-carotene and of the vitamins A and E in humans of various ages. Karlovy Univ. Univ. Karlova Lek. Fak. Hradci. Kralove Sbornik Ved. Praci. 9(4/5): 597-600.

(3490) Groh, J. ; et al. 1966. Serum level of β-carotene vitamins A, E, and C and resorption of fat-soluble vitamins in men of different age groups. Int. Congr. Gerontol., Proc., 7th. 2: 231-236.

(3491) Groh, J. ; et al. 1967. Correlations between cholesterol, β-carotene, vitamin A and vitamin E. Sb. Ved. Pr. Lek. Fak. Karlovy. Univ. Hradci. Kralove. 10(2): 237-244.

(3492) Groh, J. ; et al. 1967. Serum levels of vitamins A, E, C, carotene and cholesterol in younger and older subjects. Vnitrni. Lek. 13: 183.

(3493) Gronberg-Petersen, R. 1924. Absorption of vitamin A of vegetable origin. Ugesk. f. Laeger. 86: 425-426.

(3494) Groninger, H. S. 1956. Biochemical studies of vitamin A deficient and normal chicks. Ann Arbor, University Microfilms. Publication No. 14, 788.

(3495) Gronowska-Senger, A. ; et al. 1967. Influence of vitamin A deficiency on the development of pre-cancers of the skin in rats resulting from the topical application of methyl-cholanthrene. Przegl. Dermatol, Suppl. 54: 127-130.

(3496) Gronowska-Senger, A. ; et al. 1968. Relation between the level of vitamin A and its distribution among some protein fractions of rat liver. Zesz. Nauk. Szk. Gl. Gospod. Wiejsk. Warszawie, Technol. Rolno-Spozyw. 5: 67-76.

(3497) Gronowska-Senger, A. 1968. Present knowledge of β-carotene conversion into vitamin A. Postepy. Biochem. 14(2): 185-192.

(3498) Groot, E. H. 1949. Oxidative phenomena in dilute solutions of substances with a system of conjugated double bonds. I. Vitamin-A-acetate. Rec. Trav. Chim. Pays-Bos. 68(3): 185-190.

(3499) Groot, E. H. 1949. Oxidative phenomena in dilute solutions of substances with a system of conjugated double bonds. II. Alkaliisomerized linoleic acid. (with PH. MONNIKENDAM.) III. Further studies on vitamin-A-acetate. (with J. P. COLPA.) Rec. Trav. Chim. Pays-Bas. 68(11). 853-878; 871-878.

(3500) Gross, J., and P. Budowski. 1966. Umwandlung von Carotinoiden in Vitamin A in zwei Spezies von Fischen. Israel J. Chem. 4: 66p.

(3501) Gross, P. 1941. Nummular eczema. Its clinical picture and successful therapy. Arch. Derm. and Syph. 44(6): 1060-1073.

(3502) Grossgebauer, K. ; et al. 1969. Enhancement and neutralization of pyrogenicity of influenza viruses by various biologically active substances. Arch. Gesamte Virusforsch. 28(2): 151-164.

(3503) Gross-Selbeck, C. 1935. Prevention of injurious effects of vitamin D by adding vitamin A to diet; experiments. Klin. Wchnschr. 14: 61-62.

(3504) Groth-Petersen, E. 1937. Applicability of ocular adaptation test in clinical estimate of state of nutrition with regard to vitamin A. Hospitalstid. 80: 685-698.

(3505) Groth-Petersen, E. 1938. The serviceability of the power of distinction in examinations for deficiency of A vitamin. Acta. Med. Scand. 95: 110-126.

(3506) Groth, H., and L. Skurnik. 1939. Intravenous saturation with vitamin-A. Acta. Med. Scand. 101(4/6): 333-337.

(3507) Grube, S. B. 1968. Effect of alpha-tocopherol during experimentally-induced avitaminosis A and the effect of vitamin A deficiency on the methionine and cystine content change in the epidermal and dermal proteins. Nauch. Zap. Gorik. Nauch-Issled. Inst. Dermatol Venerol. 27: 31-37.

(3508) Grummer, R. H. ; et al. 1948. Vitamin A, vitamin C, and niacin levels in the blood of swine. Jour. Animal Sci. 7(2): 222-227.

(3509) Grunthal, E. 1939. Vitamins and the nervous system. Z. Vitaminforsch. 9: 255-280.

(3510) Gruschwitz, E. 1957. The absorption of vitamin A under penicillin treatment. Ernahrungsforschung. 2: 618-625.

(3511) Gstirner, F., and A. B. Jagtap. 1962. Uber die Herstellung wa riger Injektionslosungen der Vitamine D und E und von DOCA mit Hilfe von Netzmitteln. Arch. Pharmaz. Ber. Dtsch. Pharmaz. Ges. 295/67 (4). Mitt. Dtsch. Pharmaz. Ges. 32: 65-73.

(3512) Gualandi, G., and A. Pederzini. 1949. Vitamin A-effects of choline on intestinal absorption. Arch. Per. Le. Sc. Med. 87: 333-337.

(3513) Gude, Z. Zh. ; et al. 1964. Influence of large doses of vitamins A, D, and B on the content of copper in the animal. Ukr. Biokhim. Zh. 36(6): 893-897.

(3514) Gude, Z. Zh. ; et al. 1965. Influence of vitamins A, D, C, and B on the level of copper in the body of animals. Mikroelementy v Zhivotnovodstve i Med., Akad. Nauk, Ukr. SSR, Resp. Mezhvedomstv. Sb. 134-141.

(3515) Gudjonsson, S. V. 1926. Findet eine Sekretion des Vitamins A durch das Fell statt? Experimentelle Untersuchungen uber den Vitamin-A-Gehalt des Schafwollfettes. Amer. Journ. Physiol. 75: 533-541.

(3516) Gudjonsson, S. V. 1930. Experiments on vitamin A deficiency in rats; quantitative determination of vitamin A. Acta Path. et Microbiol. Scandinav., supp. 4: 1-189.

(3517) Gudjonsson, S. V. 1930. Experiments on vitamin A deficiency in rats and the determination of vitamin A. Acta Path. Microbiol. Scand., Suppl. IV.

(3518) Gudjonsson, S. V., and G. Oppenheim. 1930. Untersuchungen uber den A-Vitamingehalt in Melanosarkomen von Pferden. Zeitschr. Krebsforsch. 33(1/2): 155-157.

(3519) Gudjonsson, S. V. 1931. Experiments on deficiency in rats and quantitative determination of vitamin A. Bibliot. f. Laeger. 123: 331-346.

(3520) Gudjonsson, Sk. V. 1932. The body temperature in rats on normal and deficient diets. Preliminary report. Jour. Physiol. 74(1): 73-80.

(3521) Gudjonsson, S. V., and A. M. Abrahams. 1932. Vitamin A-basophilic stippling of erythrocytes in rats on deficient diet. Nord. Hyg. Tidsskr. 13: 231-240.

(3522) Gudjonsson, S. V. 1932. Vitamin A-body temperature in rats on deficient diet. Nord. Hyg. Tidsskr. 13: 241-250.

(3523) Guerillot-Vinet, A. ; et al. 1948. Substances obtained by progressive action of hydrochloric acid on vitamin A, and their biologic activity. Compt. Rend. Acad. Sc. 226: 128-130.

(3524) Guerillot-Vinet, ; et al. 1950. Effect of diet with addition of palm oil on the carotene and vit. A content of cow's milk. Compt. Rend. Acad. Agric. France. 36(16): 617-619.

(3525) Guerillot-Vinet, J. ; et al. 1951. Zunahme des Gehaltes on Carotin und Vitamin A in der Milch nach Gabe von Palmol bei der Kuhfutterung wahrend der Wintereinstallung. C. R. Hebd. Seances Acad. Agric. France. 37: 503-505.

(3526) Guerrant, N. B. ; et al. 1938. The effect of the ripening process on the vitamin A content of Cheddar cheese. J. Dairy Sci. 21: 69-72.

(3527) Guerrant, N. B. ; et al. 1939. The influence of exercise on the growing rat in the presence and absence of vitamin A. Jour. Nutrition. 17(5): 473-484.

(3528) Guerrant, N. B. ; et al. 1948. Vitamin A acetate as a vitamin A standard. Anal. Chem. 20: 465-469.

(3529) Guerrant, N. B. 1948. Does U.S. P. vitamin A-deficient diet require supplementation with ascorbic acid? Science. 108: 724-725.

(3530) Guerrant, N. B. 1949. Influence of age and of vitamin A intake on the storage of vitamin A in the liver of the rat. Jour. Nutrition. 37(1): 37-51.

(3531) Guerrant, N. B., and R. Q. Thompson. 1952. Soybean lecithins and vitamin A utilization. J. Nutrition. 46: 377-387.

(3532) Guerrant, N. B. 1956. Relative growth responses of previously depleted male and female rats to vit. A supplementation. Proc. Soc. Exptl. Biol. and Med. 92(2): 269-271.

(3533) Guerrant, N. B. 1960. Chlortetracycline and growth-promoting effect of beta-carotene and vitamin A in rats. Proc. Soc. Exptl. Biol. Med. 105: 400-403.

(3534) Guerrant, N. B. 1962. Efficiency of antibiotics in supplementing the growth effect of beta carotene in vitamin A depleted rats. Proc. Soc. Exptl. Biol. and Med. 111(1): 34-37.

(3535) Guggenheim, K. 1940. Seasonal fluctuations of the vitamin A and C contents of Palestinian milks. J. Hyg. 40: 690-698.

(3536) Guggenheim, K., and W. Koch. 1944. A liver storage test for the assessment of vitamin A. Biochem. Jour. 38(3): 256-260.

(3537) Guggenheim, K. 1944. The biological value of carotene from various sources and the effect of vitamin E on the utilization of carotene and of vitamin A. Biochem. J. 38: 260-264.

(3538) Guggenheim, K. 1952. Effect of atebrin on vitamin A metabolism. J. Nutrition. 46: 141-149.

(3539) Guha, A. ; et al. 1964. The effect of dietary vitamin A on the incorporation of amino acids into protein. Fed. Proc. 23(2 Pt. 1): 293.

(3540) Guha, A., and O. A. Roels. 1965. The influence of a-tocopherol on arylsulfatases A and B in the liver of vitamin A-deficient rats. Biochim. Biophys. Acta. 111(2): 364-374.

(3541) Guha, B. C. 1937. Nutritional research in India. Indian Med. Record. 57: 355-356.

(3542) Guidetti, E. 1935. Vitamin A-influence of maternal diet on fetal vitamin reserve; experimental study. Ginecologia. 1: 597-604.

(3543) Guilbert, H. R., and G. H. Hart. 1934. Storage of vitamin A in cattle. Jour. Nutrition. 8(1): 25-44.

(3544) Guilbert, H. R., and W. R. Hinshaw. 1934. Vitamin A storage in the livers of turkeys and chickens. Jour. Nutrition. 8(1): 45-56.

(3545) Guilbert, H. R. 1934. Die Bestimmung von Carotin als Mittel zur Schatzung des Vitamin-A-Wertes einer Nahrung. Ind. Engng. Chem., Analyt. Edit. 6: 452-454.

(3546) Guilbert, H. R., and G. H. Hart. 1935. Uber den Mindestbedarf an Vitamin A mit besonderer Berucksichtigung des Rindes. J. Nutrit. 10: 409-427.

(3547) Guilbert, H. R. ; et al. 1940. Minimum vitamin A and carotene requirements of mammalian species. J. Nutrition. 19: 91-103.

(3548) Guillory, J. K., and T. Higuchi. 1962. Die Stabilitat einiger kristalliner Vitamin A-Derivate im festen Zustand. J. Pharmac. Sci. 51: 100-105.

(3549) Gulzow, M. 1958. Vitamin A und Pankreas. Beitrag zur Bewertung von Pankreassekretionstesten. Aerztl. Wschr. 13: 597-601.

(3550) Gunderson, F. L. 1952. Improvement in nutritive value of foods. Food Drug Cosmetic Law J. 7: 28-37.

(3551) Gupta, S., and M. V. N. Rao. 1963. Vitamin A studies in malnourished children. J. Indian Pediat. Soc. 2(6): 201-203.

(3552) Gurcay, R. ; et al. 1948. Utilization of vitamin A and beta-carotene by turkey poults. Poultry Sci. 27(5): 665.

(3553) Gurcay, R. 1949. The utilization of vitamin A and beta-carotene by turkey poults. Ann Arbor, University Microfilms. Publication No. 1404.

(3554) Gurcay, R. ; et al. 1950. Utilization of vitamin A by turkey poults. I. Crystalline carotene, crystalline vitamin A acetate, and "black cod" liver oil. J. Nutrition. 41: 565-582.

(3555) Gurson, C. T. ; et al. 1962. Infantile chronic malnutrition in Turkey. IV. Vitamin levels. Ann. Paediat. 198: 444-450.

(3556) Gurubatham, S. 1939. Vitamin A-common nutritional disorders of eye (xerosis and keratomalacia due to avitaminosis). Antiseptic. 36: 486-491.

(3557) Gurubatham, S. 1941. Vitamin A-in health and disease. Antiseptic. 38: 597-602.

(3558) Gutheil, H. 1956. Vitamin A-balance during keratomalacia of infants. Arch. Kinderh. 152: 148-158.

(3559) Gutierrez, M. 1939. Vitamin A-biologic assay of Philippine fish liver oils; potency of "sanga" (Mobula eregoodoo-tenkee) liver oil. Acta. Med. Philippina. 1: 1-10.

(3560) Gutierrez, M. 1940. Vitamin A-biologic assay of Philippine fish liver oils; potency of sawfish and shark liver oils. Acta. Med. Philippina. 2: 199-204.

(3561) Gutman, J. 1937. Vitamin A-modern views on vitamins and treatment of nutritional disorders. Med. Rec. 146: 81-83.

(3562) Gutteridge, H. S. 1933. Vitamin A and D studies with growing chicks. A comparison of cod-liver oil and pilchard oil as sources of the growth-promoting factor, vitamin A. Sci. Agr. 13: 374-381.

(3563) Guy, R. A., and K-S Yeh. 1938. Soybean milk as a food for young infants. Chinese Med. J. 54: 1-30.

(3564) Guy, R. A., and K-S Yeh. 1938. Peking diets. Chinese Med. J. 54: 201-222.

(3565) Guzman-Valle, J. 1952. Determinaciones de vitamina A en leches consumidas en la ciudad de Guatemala por medio del diclorhidrin glicerol activado. Guatemala. 50p.

(3566) Guzman, M. A.; et al. 1961. Serum ascorbic acid, riboflavin, carotene, vitamin A, vitamin E and alkaline phosphatase values in Central American school children. Amer. Jour. Clin. Nutrition. 9(2): 164-169.

(3567) Gwatkin, R., and I. W. Moynihan. 1940. Avitaminosis in swine. Can. J. Comp. Med. 4: 197-200.

(3568) Gyorgy, P. 1968. Protein-calorie and vitamin A malnutrition in Southeast Asia. Fed. Proc. 27: 949-953.

(3569) Gyorgy, P., and S. H. Rubin. 1950. Chemische Vitaminbestimmungsmethoden. Die verschied. chem. Vitaminbestimmungsmethoden fur Carotin, Vitamin A, D, E, K, B B , Nicotinsaureamid, Cholin, Inosit, p-Aminobenzoesaure, Pteroylglutaminsaure u. Ascorbinsaure werden beschrieben. - 341 Literaturangaben. Vitamin Meth. 1: 147-285.

(3570) Haagen-Smit, A. J.; et al., 1946. Studies on vitamin content of canned pineapple. Food Res. 11(2): 142-147.

(3571) Haas, G. M.; et al., 1960. Experimental arteriosclerosis due to hypervitaminosis D. Amer. Jour. Pathol. 37(5): 521-549.

(3572) Hadacek, J., 1938. Uber die Ole von Su-beta-wasserfischen. Casopis ceskoslov. Lekarnictva 18: 87-90.

(3573) Haden, R. L., 1936. Multiple specific nutritional deficiency disease in the adult. J. Am. Med. Assoc. 106: 261-265.

(3574) Hadjimarkos, D., 1948. Effect of diet on some of the minerals and vitamins of human and bovine milk. Jour. Amer. Dental Assoc. 37(5): 573-579.

(3575) Haenal, H., 1956. Anti-metabolites. Pharmazie 8(11): 891-897; (12): 991-1005.

(3576) Haertel., A., 1964. Separation and determination of naturally occurring vitamin A alcohols. Z. Anal. Chem. 206(3): 188-197.

(3577) Hafner, H.; et al., 1966. Vitamin A blood levels following oral loading in liver and biliary tract diseases. Langenbeck Arch. Klin. Chir. 315: 115-125.

(3578) Hagedorn, K., 1929. The influence of vitamin deficiency upon the course of tuberculosis in rats. Beitr. Klin. Tuberk. 72: 1-31.

(3579) Haig, C.; et al., 1938. Vitamin A and rod-cone dark adaptation in cirrhosis of the liver. Science 87: 534-536.

(3580) Haig, C., and J. Post., 1941. Vitamin A concentration in the rat liver during recovery from $CCl_4$ cirrhosis. Proc. Soc. Exptl. Biol. and Med. 48(3): 710-714.

(3581) Haig, C., and A. J. Patek, Jr., 1942. Vitamin A in Laennec's cirrhosis. The relative significance of the plasma vitamin A and carotenoid levels and the dark adaptation time. Jour. Clin. Invest. 21(3): 309-317.

(3582) Haig, C., and A. J. Patek, Jr., 1942. Vitamin A-relation between dark adaption and level of vitamin in blood. J. Clin. Investigation 21: 377-383.

(3583) Haines, R. T. M., and J. C. Drummond, 1933. Vitamin A-properties of halibut-liver oil. Brit. Med. J. 1: 559-561.

(3584) Haines, R. T. M., and J. C. Drummond., 1936. Vitamin A-Kennzahlen von Heilbuttleberolen. Analyst 61: 2-5.

(3585) Halden, W., 1938. Fat-soluble vitamins. II. Vitamin A and the carotenoids. Fette u. Seifen 45: 211-215.

(3586) Hale, F., 1934. The relation of vitamin A to the eye development in the pig. Am. Soc. Animal Production, Rev. Proc. 27th Ann. Meeting, 126-128.

*(3587) Hale, F., 1935. The relation of vitamin A to anophthalmos in pigs. Am. J. Ophthalmol. 18: 1087-1093.

(3588) Hale, F., 1937. Vitamin A-relation of maternal deficiency to microphthalmia in pigs. Texas State J. Med. 33: 228-232.

(3589) Hale, W. H., and F. Hubbert, Jr., 1962. Effect of energy level and nitrate on hepatic vitamin A and performance of fattening steers. Proc. Soc. Exptl. Biol. Med. 109: 289-290.

(3590) Hale, W. H., and F. Hubbert, Jr., 1962. Performance and tissue vitamin A levels in steers fed high levels of vitamin A. Amer. J. Vet. Res. 23: 992-996.

(3591) Haleem, M. A., 1969. Effects of feeding provitamin A, stabilized vitamin A and furazolidone on production and quality of eggs. Indian Veterinary Journal 46: (3): 243-253.

(3592) Halevy, S., and K. Guggenheim., 1958. Stoffwechsel von Pteroylglutaminsaure und Leber-Nucleinsaurespiegel bei bestimmten Vitaminmangelzustanden. J. Nutrit. 65: 77-87.

(3593) Hall, M. G.,; et al., 1940. Vitamin A requirements in rheumatoid arthritis., New Engl. J. Med. 223: 92-96.

(3594) Hall, Michael, O., and Bradley R. Straatsma., 1966. The synthesis of 3'-phosphoadenosine 5'-phosphosulfate by retinae and livers of normal and vitamin A-deficient rats. Biochim. Biophys Acta 124(2): 246-253.

(3595) Hall, R. C. Jr.; et al., 1969. Content of sodium and potassium in supraspinatus muscle from hypovitaminotic A Holstein calves. J. Dairy Sci. 52: 1877-1880.

(3596) Hall, T. B., 1936. Vitamin A-dermatitis papillaris capillitii and sycosis vulgaris with hypovitaminosis: case. Arch. Dermat. & Syph. 33: 880-884.

(3597) Hall, W. T. K., and J. M. Harvey., 1952. Effects of methylthiouracil on liver vitamin A, spermatogenesis, and calcium metabolism of Merino rams. Queensland J. Agr. Sci. 9: 301-316.

(3598) Halloran, H. R., 1960. Vitamin A liver storage in pullets and hens. Western Feed and Seed. 15(10): 27-28.

(3599) Halpern, G. R.; et al., 1947. Utilization of vitamin A in water emulsion. Science 106:40-41.

(3600) Halpern, G. R., and J. Biely. 1948. The utilization of vitamin A in various carriers. J. Biol. Chem. 174: 817-826.

(3601) Halpern, G. R.; et al., 1949. Stability and utilization of vitamin A emulsions in mixed-feeds. Poultry Scri. 28: 168-172.

(3602) Haluszka, J., 1967. The effect of cholesterol overfeeding on liver function. Przegl. Lek. 23(3): 354-356.

(3603) Haluszka, J., 1968. Effect of cholesterol on liver vitamin A and $B_1$ levels and thyroid functions. Endokrynol. Pol. 19(5): 545-548.

(3604) Halverson, J. O., and F. W. Sherwood., 1940. The vitamin A activity and vitamin $B_1$ content of soybeans and cowpeas. J. Agr. Research 60: 141-144.

(3605) Halverson, A. W., and E. B. Hart., 1950. Factors affecting the stability of the vitamin A from cod liver oil in cereal feeds. Jour Nutrition 40(3): 415-427.

(3606) Halverson, A. W., and A. L. Moxon., 1952. Utilization of carotene and vitamin A by rats deficient in essential fatty acids. Univ. S. Dakota Bull. 31, Proc. S. Dakota Acad. Sci. 203-207.

(3607) Ham, E. J. Z., 1956. Verlangerung der Haltbarkeit von Vitamin A in Pulver aus Fischleber. A. P. 213-467.

(3608) Ham, E. J. Z., and P. L. Kring., 1961. Danemark, Herstellung von Haltbaren, trockenen, frei flie-beta-enden Vitamin A und/oder D-Praparaten. A. P. 2 980 587.

(3609) Hamano, S., 1935. Purification and crystalline derivatives of biosterol, vitamin A. J. Agr. Chem. Soc. Japan 11: 341-345.

(3610) Hamberg, L., 1967. Prevention of dental caries by administration of sodium fluoride with vitamins A and D. RK 331-H29 617-634 72-405831.

(3611) Hamburger, R., and J. A. Collazo., 1923. Fat metabolism and vitamin A. Klin. Wchnschr. 2: 1756.

(3612) Hamed, M. Y., and P. Decker., 1959. On the vitamin A and E content of cow's milk after high doses of vitamin E. Int. Z. Vitaminforsch 30: 41-48.

(3613) Hamilton, W. F.; et al., 1944. Vitamin A-testing of color vision in relation to vitamin administration. Am. J. Physiol. 140: 578-582.

(3614) Hammarsten, G., 1937. Dietary therapy against calcium oxalate stones in the urinary tract. Kgl. Fysiograf. Sallskap. Lund. Forh. 7: 37-39.

(3615) Hammerl, H., and O. Pichler., 1960. The significance of vitamins A, E and B-6 for the genesis and therapy of arteriosclerotic vascular changes. Wien. Klin Wschr. 72: 468-470.

(3616) Hammond, J. C., and H. R. Bird., 1942. Effects of nutrition on variability in the growth of chickens. Poultry Sci. 21: 230-242.

(3617) Hamre, C. J., 1960. Dilatation of bile ducts and intrahepatic lesions with obstructive jaundice in rats fed diets deficient in vitamin A. Am. J. Med. Sci. 220: 183-194.

(3618) Hamre, C. J., 1950. Lack of influence of vitamin C on the development of the vitamin A deficiency syndrome in the rat. Proc. North Dakota Acad. Sci. 4: 22-23.

(3619) Hanau, G., 1934. Vitamin A-vitamin content of hypophysis. Gazz. d. Osp. 55: 673-675.

(3620) Handler, J. A., 1963. Eine Flussigkeitsseintillationsmethode zur Bestimmung von Tritium in den Geweben von Tieren nach Verabreichung von Tritium-markiertem Vitamin A. Anylst 88: 47-55.

(3621) Hands, A. R.; et al., 1965. Visual aciuty of essential fatty acid-deficient rats. Biochem J. 94(1): 279-283.

(3622) Haneveld, G. T., 1966. Sensible nutrition also contributes to traffic safety. Voeding 27(9): 460-462.

(3623) Hanke, M. T., and K. K. Koessler, 1928. The effect of scurvy-producing diets and tyramine on the blood of guinea pigs. Jour. Biol. Chem. 80(2): 499-502.

(3624) Hanna, M. B., 1965. Management of night-blindness with vitamins A and E. Bull. Ophthal Soc. Egypt. 58: 219-224.

(3625) Hanneman, I. J., 1928. Erfahrungen mit ultraviolett bestrahlter milch bei rachitis. Nederl. Tijdschr. Geneeskunde 72: I. 2461-2465.

(3626) Hanning, F., 1933. Canned strained vegetables as sources of vitamin A., J. Am. Dietetic Assoc. 9: 295-305.

(3627) Hanning, F., 1936. Vitamin A-in canned strained vegetables; further studies. J. Am. Dietet. Assoc. 12: 231-236.

(3628) Hansborough, L. A., 1947. The effect of increased vitamins in the egg on the development of the chick. Growth 11: 77-78.

(3629) Hansel, W.; et al., 1951. Die Wirkung zweier bei der Erzeugung der experimentell erzeugten Hyperkeratose wirksamer Stoffe im Vitamin-A- Stoffwechsel. Cornell Veterinarian 41: 367-376.

(3630) Hansen, H. M.; et al., Effect of form of alfalfa when fed as the sole source of roughage to Guernsey cows on the carotenoid and vitamin A content of milk. J. Dairy Sci. 37: 311-316.

(3631) Hansen, L. G.; et al., 1968. Fluorometric micromethod for serum vitamin A. Amer. J. Clin. Pathol. 50(4): 525-529.

(3632) Hansen, L. G.; et al., 1968. A fluorometric micromethod for serum vitamin A. Tech. Bull. Regist. Med. Technol. 38(9): 239-243.

(3633) Hansen, L. G., and W. J. Warwick., 1969. Fluorometric micromethod for serum vitamins A and E. Amer. J. Clin. Pathol. 51(4): 538-541.

(3634) Hansen, L. G., and W. J. Warwick., 1969. Fluorometric micromethod for liver vitamin A. Amer. J. Clin. Pathol. 51(5): 667-668.

(3635) Hansen, R. G.; et al., 1946. The effect of vitamin supplements on survival of newborn calves. J. Dairy Sci. 29: 761-766.

(3636) Hansen, R. G.; et al., 1946. Colostrum milk and its vitamin A content. J. Dairy Sci. 29: 809-814.

(3637) Hansson, H. A., 1970. Scanning electron microscopy of the retina in vitamin A-deficient rats. Virchow. Arch. (Zellpath) 4:368-379.

(3638) Haque, M. E.; et al., 1948. Effect of vitamin deficiences in New Hampshire chicks injected with high doses of thyroxine. Endocrinology 42: 273-278.

(3639) Haque, M. E.; et al., 1949. Response of vitamin-deficient chicks to the sex hormones. Poultry Sci. 28(6): 914-920.

(3640) Hara, M., 1957. Untersuchungen uber Resorption von Carotin durch den menschlichen Korper. Vitamins (Kyoto) 13: 545-548.

(3641) Harada, A.; et al., 1952. Problems of urolithiasis. Yokohama Med. Bull. 3: 208-223.

(3642) Harada, T., 1956. Influence of various vitamins on rabbit liver with allergic injury. I. Effects of fat-soluble vitamins. Naika Hokan. 3: 729-734.

(3643) Harashima, K.; et al., 1961. Simplified method for the determination of vitamin A in the presence of carotene in animal tissues. J. Vitaminol. (Osaka) 7: 150-162.

(3644) Harashima, K., 1964. Umwandlung von beta-Carotin in Vitamin A durch Rattendarm-Abschnitte. Seikagaku (Biochemie, Tokyo) 36: 748-755.

(3645) Harashima, K., 1964. Conversion of beta-carotene to vitamin A by rat intestinal sections. Biochim. Biophys. Acta 90(1): 211-213.

(3646) Harashima, K., 1965. Metabolism of vitamins. I. Vitamin A. Taisha 2: 853-858.

(3647) Harashima, K., 1965. Metabolism of vitamins. II. Vitamin A. Taisha 2: 925-930.

(3648) Harbers, L. H.; et al., 1963. Effect of urease immunity upon rats with controlled vitamin A intakes. Proc. Soc. Exptl. Biol. Med. 113: 420-424.

(3649) Harde, E., 1932. Cancer and vitamins A or D. Compt. Rend. Soc. Biol. 109(6): 435-437.

(3650) Harde, E., and N. Kobozieff., 1934. Influence of vitamins A and D on the frequency of tumors in mice. Compt. Rend. Soc. Biol. 116: 848-849.

(3651) Hardie, L. W. and N. C. Esselbaugh., 1953. Nutritional status of ten family groups in Washington State. II. Vitamin A nutrition. J. Am. Dietet. Assoc. 29: 134-139.

(3652) Hardy, M. H., 1967. Responses in embryonic mouse skin to excess vitamin A in organotypic cultures from the trunk, upper lip, and lower jaw. Exptl. Cell. Res. 46(2): 367-384.

(3653) Hardy, M. H., 1968. Glandular metaplasia of hair follicies and other responses to vitamin A excess in cultures of rodent skin. J. Embryol Expt. Morph. 19: 157-180.

(3654) Haridas, G., 1935. Hypovitaminosis A; case. Malayan, Med. J. 10: 151-152.

(3655) Harkin, A. M.; et al., 1958. Quality of the cooked meat of turkeys fed animal or vegetable protein diets with vitamin and fat supplements. Poultry Sci. 37(6): 1328-1339.

(3656) Harkins, R. W.; et al., 1963. Effect of NaF on the growth of rats with varying vitamin and calcium intakes. J. Nutr. 81: 81-86.

(3657) Harman, D., 1962. Atherosclerosis: Beneficial effect of vitamin A. In: American Heart Association Council on Arteriosclerosis annual meeting. Circulation 26(4Pt. 2): 656.

(3658) Harmanses, S., 1961. Blood vitamin A content in kwashiorkor. From: First All Asian Congress of Pediatrics. Indian Jour. Pediatrics 28(158): 119.

(3659) Harmon, B. G., 1963. The relation of specific nutrient deficiencies to antibody response, in swine. I. Vitamin A. II. Pantothenic acid, pyridoxine, or riboflavine. Dissertation Abstr. 23: 3573. Univ. Microfilms Order No. 63-1729 140p.

(3660) Harmon, B. G.; et al., 1963. Relationship of specific nutrient deficiencies to antibody production in swine. I. Vitamin A. Jour Nutrition 79(3): 263-268.

(3661) Harmon, E. M., 1945. Greater butter values shown. Amer. Butter Rev. 7(8): 238-240.

(3662) Harms. F., 1940. Die Bedeutung des Vitamins A fur den Tierkorper. Berliner u. Munchener Tierarztl. Wochenschr. (39): 465-470.

(3663) Harms. F. , 1941. The vitamin A and carotene content of hen, duck and sea gull eggs. Z. Fleisch- u. Milchhyg. 51: 294-296; 303-305.

(3664) Harms. F. , 1942. The effect of feeding on the vitamin A-and carotene content of eggs. Vitamine u. Hormone 2: 35-43.

(3665) Harms. F. , 1942. Vitamin A content of the liver of various animals. Vitamine u. Hormone 2: 151-158.

(3666) Harms, F., 1943. Vitamin A and capacity for infection with special consideration of the significance of vitamin A for pullorum infection in hens. Berlin u. Munch. Tierdrztl. Wochschr. 32-33.

(3667) Harm, F., 1946. Der enzootische Herztod der Schweine and Vitamin A. Deutsche Tierarztl. Wochenschr. 68-70.

(3668) Harms, F. , 1951. Vitamin A in Fetus und Jungtier bei Rind und Pferd. Der mittlere Vitamin A. Mh. Veterinarmed. 6: 165-169.

(3669) Harms, H., 1943. Vitamin A and susceptibility to infections with especial reference to the significance of vitamin A for pullorum disease in checkens. Berliner u. Munchener Tierarztl. Wochenschr. (5/6): 32-33.

(3670) Harms, R. H.; et al., 1955. Storage of vitamin A in chick livers as a criterion of stability, availability, and dietary level. Poultry Sci. 34(5): 1125-1133.

(3671) Harms, R. H.; et al., 1956. Evidence for a substance in fish solubles which enhances vitamin A storage in chick livers. Poultry Sci. 35(2): 285-291.

(3672) Harris, P. L.; et al., 1946. Survey of blood plasma levels of vitamin A and carotene of persons in area of endemic malnutrition. Am. J. Pub. Health 36: 155-160.

(3673) Harris, P. L.; et al., 1947. Dietary production of gastric ulcers in rats and prevention by tocopherol administration. Proc. Soc. Exptl. Biol. Med. 64: 273-277.

(3674) Harris, P. L.; et al., 1947. Covitamin studies. VI. Effect of tocopherol supplementation on the output of vitamin A, carotene, and fat by dairy cows. J. Nutrition 33: 411-427.

(3675) Harris, P. L., 1949. Fat-soluble vitamins. Ann. Rev. Biochem. 18: 391-434.

(3676) Harris, P. L.; et al., 1951. Biochemische Studien uber Vitamin A. J. Amer. Chem. Soc. 73: 1252-1254.

(3677) Harris, P. L., 1960. Bioassay of vitamin A compounds. Vitamins Hormones. 18: 341-370.

(3678) Harris, R., G. W. Owen, 1939. Vitamin A-night blindness and vitamin deficiency as evidenced by new biophotometer. Mississippi Doctor 17: 334-336.

(3679) Harris, R. S.; et al., 1940. The effect of reduced evaporation on the vitamin content of fresh vegetables in refrigerated storage. J. Lab. Clin. Med. 25: 838-843.

(3680) Harris, Robert S., and L. M. Mosher. 1941. The effect of reduced evaporation on the provitamin A content of fresh vegetables in refrigerated storage. Food Res. 6(4): 387-393.

*(3681) Harris, R. S.; et al., 1954. "The Biochemistry and Pathology of Hypervitaminosis A", In: Vitamins and Hormones. Advances in research and applications. Vol. XII. Acedemic Press Inc.: New York 10.

(3682) Harrison, M. T., and R. D. Mercer., 1953. Vitamin A-intoxication. Cleveland Clin. Quart. 20:424-429.

(3683) Harms, R. H.; et al., 1956. A factor obtained from condensed fish solubles which enhances vitamin A storage in chick livers. Poultry Sci. 35: 1254-1258.

(3684) Harper, T. A.; et al., 1952. Influence of source and quantity of vitamin A ingested upon liver storage and survival time of bobwhite quail. Poultry Sci. 31: 273-283.

(3685) Harper, T. A.; et al., 1953. The influence of vitamin A liver storage and strain differences on survival in adult bobwhite quail. Poultry Sci. 32: 166-175.

(3686) Harrill, I.; et al., Effects of vitamins A and E on lipids in selected rat tissues. J. Nutr. 87(4): 424-428.

(3687) Harrington, D. D.; et al., 1970. Correlation of maternal blood levels of vitamin A at conception and the incidence of hydrocephalus in newborn rabbits; an experimental animal model. Lab. Anim Care 20: 675-680.

(3688) Harris, H. A., 1926. The growth of the long bones in childhood. Arch. Internal Med. 38(6): 785-806.

(3689) Harris, L. J., and T. Moore., 1928. Hypervitaminosis and vitamin balance. Biochem. Jour. 22(6): 1461-1477.

(3690) Harris, L. J.; et al. 1932. On the pathogenesis of avitaminosis A. Vitamin A as the anti-keratinising factor. Lancet 223 (5690): 614-617.

(3691) Harris, L. J., and M. A. Abbasy, 1939. The dark-adaptation test; its reliability as a test for vitamin A deficiency. Lancet II: 1299-1305; 1355-1359.

(3692) Harris, L. J., 1962. Symposium on biochemistry and nutrition. Ascorbic acid. Proc. Roy. Soc. (London). Series B 156; 295-299.

(3693) Harris, P. L., and G. L. Poland., 1937. Vitamin studies on bananas. I. The vitamin A, $B_1$ and C contents of ripe bananas. Food Research 2: 311-319.

(3694) Harrison, R. W.; et al., 1935. Studies on the utilization of swordfish livers. U. S. Bur. Fish, Investigational Rept. 28: 10pp.

(3695) Harrison, R. W., and V. J. Samson., 1942. Pacific Coast shark fishery. Fishery Market News (U. S. Fish & Wildlife Service) 4:(2): 3-8.

(3696) Hart, G. H., and H. R. Guilbert., 1933. Vitamin A deficiency as related to reproduction in range cattle. Calif. Agr. Exptl. Sta., Bull. 560: 3-30.

(3697) Hart, G. H. and R. F. Miller, 1937. Die Beziehung gewisser Ernsrungsfaktoren zur Fruchtbarkeit bei Schafen. J. Agric. Res. 55: 47-58.

(3698) Hart, G. H. and H. R. Guilbert., 1941. Relation of Brucella abortus infection to vitamin A content of fetal livers. Am. J. Vet Research 2: 390-394.

(3699) Hart, G. H., 1945. Vitamin A deficiency and requirements of farm animals. Indian J. Vet. Sci. 15: 80-92.

(3700) Hartel, A., 1964. Trennung and quantitative Bestimmung der naturlich vorkommenden Vitamin-A-Alkohole. Z. Analyt. Chem. 206: 188-197.

(3701) Hartel, A., 1965. Schnellmethode zur Bestimmung von Vitamin A in Futtermitteln. Z. Analyt. Chem. 208: 117-126.

(3702) Howard, H. W., 1951. V. St. A. Kindernahrmittel, bestehend aus vorwiegend Lactose. Fetten u. Proteinen in einem bestimmten Mengenverhaltnis zueinander. A. P. 2 659 676.

(3703) Hartman, C., 1924. Vitamin A and exercise in relation to follicular atresia in the oppossum. Am. J. Physiol. 68: 97-107.

(3704) Hartman, L., 1950. Die Alkaliraffination von Vitamin-A-haltigen Olen. J. Soc. Chem. Ind. 69: 55-58.

(3705) Hartman, L., 1950. A study of oil extraction from fish livers. J. Am. Oil Chemists' Soc. 27: 409-411.

(3706) Hartsook, E. W.; et al., 1953. Effect of aureomycin on utilization of vitamin A in the growing male albino rat. Proc. Soc. Exptl. Biol. Med. 83: 43-45.

(3707) Hartzler, E. 1948. The vitamin A content of human blood plasma as an index of carotene utilization. Jour. Nutrition 36(3): 381-390.

(3708) Harvey, H. I.; 1938. Die Wirkung verschiedener Fraktionen aus Leber auf die experimentelle schwarze Zunge beim Hund. J. Nutrit. 16: 153-171.

(3709) Harvey, J. D.; et al., 1955. The utilization of carotene and vitamin A by chicks during the first weeks after hatching. Poultry Sci. 34(6): 1348-1357.

(3710) Hasegawa, M., 1961. Vitamin A-enriched fish sausage. I. A determination of vitamin A enrichment in fish sausage, and loss of vitamin A during manufacturing and storage. Nippon Suisan Chuo Kenkyusho Hokoku 9: 60-69.

(3711) Hashmi, M. H.; et al., 1967. Identification of seventeen vitamins by circular thin-layer chromatography. Mikrochim. Acta (6): 1111-1118.

* (3712) Hashmi, M; et al., 1969. Semiquantitative determination of fat-soluble vitamins by circular thin-layer chromatography. Mikrochim. Acta (1): 53-58.

(3713) Hashmi, M. H.; et al., 1969. Semidetermination of ten vitamins by the nichrome wire ring chamber. Mikrochim. Acta. (2): 244-252.

(3714) Hassan, M. U., and L. Chand Khanna., 1947. Level of vitamin A in the blood and its relation to dark adaptation and other observations. Indian J. Med. Research 35: 59-79.

(3715) Hassan, M. U.; et al., 1948. Relation of vitamin A to white cells in human blood and normal white cell counts in the Punjab. Indian J. Med. Research 36: 33-45.

(3716) Hasselbach, F., 1938. Vitamins and tuberculosis. Z. Vitaminforsch 7: 152-173.

(3717) Hasselbach, F., 1942. Vitamins in the plan of treatment of tuberculosis. Therap. Gegenwart 83: 165-169.

(3718) Hata, M. and M. Hata., 1967. Fatty acid composition of esters in fish liver. I. Separation of fatty acid of vitamin A ester. Tohoku J. Agr. Res. 18(3): 225-231.

(3719) Hata, M., and M. Hata., 1967. Fatty acid composition of esters in fish liver: II. Eel (Anguilla japonica) liver and Channa argus (Cantor) liver. Tohoku. J. Agr. Res. 18(4): 267-273.

(3720) Hatch, R. D., 1944. Vaginal smears in the diagnosis of vitamin A deficiency. Jour. Amer. Vet. Med. Assoc. 104(805): 215-216.

(3721) Hathaway, I. L., and H. P. Davis., 1933. Vitamin content of Holstein and Jersey cream. Holstein-Friesian World 30: 839-851.

(3722) Hathaway, I. L., and H. P. Davis., 1933. The vitamin A content of skimmilk, standardized milk, and cream from different breeds of cows. Nebraska Agric. Exptl. Sta. Res. Bull. 69: 1-16.

(3723) Hathaway, I. L., and H. P. Davis., 1935. The vitamin A content of sour cream butter, sweet cream butter, and margarines. Nebraska, Agric. Exptl. Station Res. Bull. 79: 1-8.

(3724) Hathaway, I. L., and H. P. Davis., 1938. The Vitamin A Content of Cheese. Nebraska Agric. Exptl. Sta., Research Bull. 103: 1-10.

(3725) Hattiangdi, G. S., and A. P. Mahadevan., 1960. Vitamin A content of market samples of vanaspati. J. Sci. Ind. Research (India) 19C: 30-31.

(3726) Hattori, K., and T. Obata, 1923. Uber den unverseifbaren Bestandteil des Lebertrans (Vitamin-A). Journ. Pharm. Soc. Japan 497: 41.

(3727) Haubold, H., 1950. Schilddrusenhormon and Carotinoide. Aerztl. Forsch. 4: I: 149-157.

(3728) Haubold, H.; et al., 1951. Neue therapeutische Erfahrungen mit emulgiertem Vitamin A. Med. Klin. 46: 38-41.

(3729) Haubold, H., 1951. Provitamin-A-Gehalt der Futterpflanzen, Vitamin-A-Gehalt der Milch unter dem Einflu von Jahreszeit und Witterung and ihre Ruckwirking auf die Kropfwelle im bayrischen Voralpenland. Milchwissenschaft 6: 285-295.

(3730) Haubold, H.; et al., 1953. Influence of penicillin on the vitamin A content of the serum and on night vision. Munch. Med. Wochschr. 95: 792-796.

(3731) Haubold, H., and Ernst Kolb., 1955. Futterungs-und wetterbedingte Schwankungen des jahreszeitlichen Vitamin-A-Gehalts in den Milchfetten. Milchwissenschaft 10: 340-348.

(3732) Haubold, H.; et al., 1960. Beltrage zur corpusculaären Resorption von Emulsionen fettloslicher Vitamine. Das Histologische Resorptionsbild von Vitamin A in oliger und emulgierter Form. Milchwissenschaft 15: 392-398.

(3733) Hauge, S. M.; et al., 1927. Fat soluble A requirements for growing chicks. Poultry Sci. 6(3): 135-140.

(3734) Hauge, S. M., 1930. Eine Untersuchung uber Vererbung des Vorkommens von Vitamin A bei Mais. Journ. Biol. Chemistry 86: 161-165.

(3735) Hauge, S. M., 1935. Nachweis einer enzymatischen Zerstorung des Vitamin-A-Gehaltes von Alfalfa während des Trocknungsprozesses. J. Biol. Chemistry 108: 331-336.

(3736) Hauge, S. M.; et al. 1937. A further study of the factor in soybeans affecting the vitamin A value of butter. J. Dairy Sci. 20: 87-91.

(3737) Hauge, S. M.; et al. 1937. The vitamin A-suppressing factor in soybeans. Agr. Exptl. Sta., Rept. of the Director. 8-9.

(3738) Hauge, S. M.; et al., 1940. The absorption of the vitamin A-suppressing factor from soybean oil. J. Dairy Sci. 23: 719-723.

(3739) Hauge, S. M., and F. P. Zscheile. 1942. The effect of dehydration upon the vitamin A content of eggs. Science 96: (2502): 536.

(3740) Hauge, S. M.; et al., 1944. Homogenized liquid and dried eggs. Stability of vitamin A and carotenoids during dehydration and storage. Ind. Eng. Chem. 36: 1065-1068.

(3741) Haugen, A. O., and E. L. Hove., 1960. Vitamins A and E in deer blood. J. Mammal. 41(3): 410-411.

(3742) Haurowitz, F., 1933. Vitamin A-relation to amount of visual purple in eye; study of hemeralopia. Med. Klin. 29: 1148-1149.

(3743) Hauser, C. G.; et al., 1944. "Filled"milk of high vitamin content. U. S. 2, 335, 275.

(3744) Hauser, C. G.; et al., 1946. A milk food product. Brit. 575,160.

(3745) Havivi, E., and G. Wolf., 1967. Vitamin A, sulfation and bone growth in the chick. J. Nutr. 92(4): 467-473.

(3746) Hawk, P. B.; et al., 1921. Der Vitamingehalt von Honig und Honigwaben. Amer. Journ. Physiol. 55: 339-348.

(3747) Hawk, P. B., 1929. Cod-liver oil and the antimony trichloride reaction for vitamin A. Science 69: 200.

(3748) Haworth, E.; et al., 1939. Die Oxydation von Vitamin A mit dem O Oppenauer-Reagens. J. Chem. Soc. (London) 128-132.

(3749) Haworth, M.; et al., 1951. Hemoglobin values, plasma vitamin A and carotene levels in young women on institutional diets. J. Am. Dietet. A. 27: 960-964.

(3750) Hay, R. L.; et al., 1947. Dried whole egg powder. XXV. Further studies on the effect of added substances. Canadian Jour. Res. Sect. F. Technol. 25(2): 160-172.

(3751) Hayashi, I., 1933. Solid material containing vitamins A and D. Japan. 99: 171.

(3752) Hayashi, U., 1947. Coloring of oleomargarine. Japan. 175: 416.

*(3753) Hayes, B. W.; et al., 1967. Turnover of liver vitamin A in steers. J. Anim. Sci. 26(4): 855-857.

(3754) Hayes, B. W.; et al., 1968. Turnover of liver vitamin A in steers fed a low protein ration. J. Anim. Sci. 27: 516-518.

(3755) Hayes, E., and. E. H. Hopkins., 1952. Die Vitamin-A-Wirksamkeit von B. P. Dorschlebertran. Pharmac. J. 168 (4): 114.

(3756) Hayes, E., and M. A. Petitpierre., 1952. Neovitamin A and Vitamin A alcohol in commercial fish liver oils and vitamin A concentrates. J. Pharm. and Pharmacol. 4: 879-885.

(3757) Hayes, E., and Margaret A. Petitpierre., 1953. Isomerisierung von Vitamin A durch Hitze. Pharmac. J. 171 (4): 117.

(3758) Hayes, J. P.; et al., 1966. The beta-carotene and vitamin A value of South African chicken rations. S. Afr. J. Agr. Sci. 9(3): 561-576.

(3759) Hayes, J. P., 1966. Influence of high levels of vitamin A in combination with beef tallow on egg yolk color. S. Afr. J. Agr. Sci. 9(2): 461-465.

(3760) Hayes, K. C.; et al., 1968. Pathogenesis of the optic nerve lesion in vitamin A-deficient calves. Arch. Ophthalmol. 80(6): 777-787.

(3761) Hayes, K. C.; et al., 1969. Vitamin E deficiency and fat stress in the dog. J. Nutr. 99(2): 196-209.

*(3762) Hayes, K. C.; et al., 1970. The fine structure of vitamin A deficiency. I. Parotid duct metaplasia. Lab. Invest. 22(1): 81-89.

(3763) Hayes, K. C. et al. 1970. Vitamin A deficiency and bone growth. I. Altered drift patterns. Calcif. Tissue Res. 6:120-132.

(3764) Hays, R. L. and K. A. Kendall.; et al., 1956. Gunstige Wirkung von Progesteron auf die Trachtigkeit des Vitamin-A-Mangelkaninchens. J. Nutrit. 59: 337-341.

(3765) Hazelhurst, W. D.; et al., 1942. The relationship of vitamin A to infection in the chick embryo. Jour. Clin. Invest. 21(5): 638.

(3766) Hazzard, D. G.; et al., 1962. Effect of level of ration intake and duration of vitamin A deficiency upon some biochemical constituents in serum, cerebrospinal fluid and aqueous humor of Holstein calves fed fixed carotene intakes. Jour. Dairy Sci. 45(1): 91-104.

(3767) Hazzard, G. D., 1964. Chronic hypervitaminosis A in the bovine. Dissertation Abstr. 24(11): 4378-4379. Univ. Microfilm (Ann. Arbor Mich.) Order No. 64-3537.

(3768) Heaney, D. P., 1962. Effects of marginal vitamin A intake during gestation in swine. Dissert. Absts. 22(12 Pt. 1): 4140.

(3769) Heaney, D. P.; et al., 1963. Effects of marginal vitamin A during gestation in swine. Jour. Animal Sci., 22(4): 925-928.

(3770) Heaton, F. W.; et al., 1955. Das Vitamin-A-Mangelsyndrom bei der Ratte. Biochem. J. 60: 18.

(3771) Heaton, F. W.; et al., 1957. Aspects of vitamin A deficiency in the rat. Biochem. Jour. 67(2): 208-215.

(3772) Hebert, J. W., and A. F. Morgan., 1953. Influence of alpha-tocopherol upon utilization of carotene and vitamin A. J. Nutrition 50: 175-190.

(3773) Hecht, S., and J. Mandelbaum., 1938. Rod-cone dark adaptation and vitamin A. Science 88: 219-221.

(3774) Hecht, S., 1938. Vitamin A-dark adaptation and diagnosis of avitaminosis. Proc. Round Table. Nutrition & Pub. Health. 16: 32-62.

(3775) Hecht, S., 1939. Diagnosis and incidence of vitamin A deficiency. J. Connecticut State Med. Soc. 3: 223-224.

(3776) Hecht, S., and J. Mandelbaum. 1939. The relation between vitamin A and dark adaptation. J. Am. Med. Assoc. 112: 1910-1916.

(3777) Hecht, S., and J. Mandelbaum, 1940. Dark adaptation and experimental human vitamin A deficiency. Am. J. Physiol. 130: 651-654.

(3778) Hedberg, J., and T. Lindqvist. 1938. Vitamin A-vitamin content of blood and urine in chronic nephritis. Acta. Med. Scandinav. Supp. 90: 231-247.

(3779) Hedenberg, I., 1951. Vitamin A-deficiency and renal calculi. Nord. Med. 46: 1271-1274.

(3780) Hedenberg, I., 1954. Macroscopic and microscopic changes and stone formation in the urinary tract in experimentally produced vitamin A deficiency in rats and some notes on the effect of large doses of vitamin A on the uterine, vaginal, and vesical epithelium. Acta. Chrurgica Scandinavica Suppl. 192.

(3781) Hedon, L.; et al., 1942. Vitamin A-detection of latent deficiency by means of Chevallier-Roux adaptometer during February and March of 1942; studies on 617 school children. Montpellier Med. 21:22: 423-426.

(3782) Hegner, D.; et al., 1970. Influence of vitamin A on the cathespin content of rat liver. Int. Z. Vitaminforsch. 40:9-18.

(3783) Hegsted, D. M., 1946. Nutritional studies with the duck. III. Niacin deficiency. J. Nutrition 32: 467-472.

(3784) Heid, J. L., and A. L. Curl., 1944. Papaya products. Fruit Prod. Jour. 24(2): 41-44.

(3785) Heidebrecht, A. A.; et al., 1951. Composition of swine milk. I. Major constituents and carotene, vitamin A, and vitamin C. J. Nutrition 44: 43-50.

(3786) Heidrich, H. D., 1967. Studies on vitamin A and carotin levels in the blood of cows. Mh. Veterinaermed. 22: 778-781.

(3787) Heilbron, I. M.; et al., 1927. Absorptionsbanden von Ergosterin und Vitamin D. Nature 120: 617-618.

(3788) Heilbron, I. M.; et al., 1931. Specificity in tests for vitamin A. A new conception of the chromogenic constituents of fresh and aged liver oils. Biochem. J. 25: 1352-1366.

(3789) Heilbron, I. M.; et al., 1931. Characterisation of vitamin A. I. Spectroscopic evidence. Chem. and Indust. (London) 59(22): 183T-186T.

(3790) Heilbron, I. M.; 1934. Vitamin A. Vf. stelt eine Bemerkung (vgl. vorst. Ref.) dahingehend, da eine z- u. beta-Fraktion von Vitamin A nach Karrer isomer seien, insofern richtig, da dies von Karrer nicht ausgesprochen wurde, halt aber den eigenen Befund einer Identitat der -Fraktion mit den besten Vitamin-A-Praparaten aufrecht. J. Soc. Chem. Ind., Chem. & Ind. 53: 1063.

(3791) Heilbron, I. M.; et al., 1944. The chemistry and physiology of vitamin A. Vitamins and Hormones 2: 155-213.

(3792) Heilbron, I., and B. C. L. Weedon., 1958. Chemistry of vitamin A and related compounds. Bull. Soc. Chim. France 83-97.

(3793) Heilmeyer, L.; et al., 1967. Inhibition of endotoxin skin inflammation by pretreatment with vitamin A. Klin. Wochenschr. 45 (11): 586-587.

(3794) Heimann, W., 1943. Determination of vitamin A in colored, vitaminized margarine. A. Untersuch. Lebensm. 85: 502-507.

(3795) Heimer, C. B.; et al., 1949. Influence of thyroid on utilization of vitamin A. Jour. Nutrition 38(3): 345-352.

(3796) Heinlein H., and W. Heinrich., 1960. Control experimental atherosclerosis in rabbits by vitamins A and E. Med. Welt 44: 2297-2303.

(3797) Heinrich, B., 1968. Vitamin A determination in slaughtered pigs. Prakt. Tierarzt. 49(11): 503-504.

(3798) Heinsius, E., 1936. Vitamin A-influence on regeneration of corneal epithelium; experimental studies. Arch. f. Ophth. 136: 103-118.

(3799) Heinsius, E., 1939. Vitamin A-effect of deficiency on eyes. Deutsche Med. Wchnschr. 65: 1547-1549.

(3800) Heinsius, E., 1941. Vitamin A-twilight vision; effects of vitamin. Klin. Monatsbl. f. Augenh. 106: 443-452.

(3801) Heiss, R. and K. Peach., 1937. Comparative experiments on the freezing of fruits and vegetables. Z. Ges. Kalte-Ind. 44: 188-194; 212-217.

(3802) Hejda, S., and K. Osancova., 1968. Comparison of nutritional intakes in the extreme quartiles of a population group. Ceskoslovenska Gastroenterologie a Vyziva 22(6): 367-375.

(3803) Heller, C. A., 1956. The tocopherol and vitamin A content of some marine blubber oils. Dissertation Absts. 16(2): 226-227.

(3804) Hellstrom, V.; et al., 1961. Vitamin A stability and utilization in dry stability vitamin A concentrates. Kungl. Lantbrukshogskolan Statens Husdjurs-forsok. Meddel. 74: 1-10.

(3805) Hellstrom, V.; et al., 1964. Stability of vitamin A, tocopherol (vitamin E), and unsaturated fatty acids in vitamized vegetable oil exposed to sunlight. UAR Foda (8): 57-61.

(3806) Hellstrom, V., 1968. Calculation of the total vitamin A value of human diets. Int. Z. Vitaminforsch. 38(2): 131-137.

(3807) Helmboldt, C. F.; et al., 1953. Pathologie von experimenteller A-Hypervitaminose bei jungem Milchvieh. J. Amer. Veterin. Med. Assoc. 123 (240): 343-354.

(3808) Hemming, F. W.; et al., 1958. Intracellular distribution of SA and SC., Biochem. J. 68: 29-30.

(3809) Henbest, H. B.; et al.,1955. Untersuchungen in der Polyenrihe. J. Chem. Soc. (London) 2763-2765.

(3810) Henbest, H. B.; et al., 1957. Untersuchungen in der Polyenreihe. J. Chem. Soc. (London) 4909-4912.

(3811) Hendricks, J. B.; et al., 1947. Chronic moderate hypervitaminosis D in young dogs. Amer. Jour. Physiol. 149(2): 319-332.

(3812) Henk, F. 1966. Gout nephritis in chicks as a result of vitamin A feeding deficiency. Wierner Tierarztl Monatsschr. 53(3): 161-170.

(3813) Henley, T. H.; et al., 1944. Reserves, absorption and plasma levels of vitamin A in premature infants. Amer. Jour. Dis. Children 68(4): 257-264.

(3814) Hennaux, L.; et al., 1951. Der Einflu β der Ernahrung auf den Gehalt des Colostrums an Vitamin A und Carotin. Bull. Inst. Agronom. Stat. Rech. Gembloux 19: 251-256.

(3815) Hennaux, L.; etal., 1952. Administration of germinated oats and lactation. Bull. Inst. Agron. et Stas. Recherches Gembloux 20: 72-81.

(3816) Hennessey, R. S. F., 1932. A study of the leucocytic output of man under varying conditions of vitamin A intake. Trans. Roy. Soc. Trop. Med. and Hyg. (London) 26(1): 55-64.

(3817) Hennon, D. K.; et al., 1964. Vitamin A-Fluroide retention in rats receiving various vitamin-sodium fluroide preparations. J. Pediat. 64: 272-277.

(3818) Henrikson, P., 1929. General cell degeneration as a result of vitamin A deficiency. Cod liver Oil in large doses. Acta Paediatr 8(4): 397-442.

(3819) Hrnriksen, P. K., 1938. Vitamins and milk. Chem. Zeutr. I. 1025.

(3820) Henry, K. M., and S. K. Kon., 1937. Milk and nutrition. I. The effect of commercial pasteurization on the nutritive value of milk, as determined by laboratory experiment. Raw and commercially pasteurized milks as sources of calcium and phosphorous for the growing rat. Nat'l. Inst. Research Dairying Reading and Rowett Research Inst., Aberdeen, Unnumbered Pub. 9-31.

(3821) Henry, K. M. and S. K. Kon., 1937. Eine Bemerkung uber den Vitamin-D-Gehalt von Kuhcolostrum. Biochemical J. 31: 2199-2201.

(3822) Henry, K. M.; et al., 1939. The effect of churning on the vitamin A and carotene content of milk fat. J. Dairy Research 10: 114-117.

(3823) Henry, K. M.; et al., 1939. The effect of commercial drying and evaporation on the nutritive properties of milk. Jour. Dairy Res. 10(2): 272-293.

(3824) Henry, K. M.; et al., 1940. The vitamin A and carotene contents of Shorthorn colostrum. J. Dairy Research 11: 1-8.

(3825) Henry, E. M.; et al., 1941. Vitamins A and D in (beef) dripping. Lancet I: 311-312.

(3826) Henry, K. M.; et al., 1944. The effects of commercial processing and of storage on some nutritive properties of milk. Comparison of full-cream sweetened condensed milk and of evaporated milk with the original raw milk. Jour. Dairy Res. 13(3): 329-338.

(3827) Henry, K. M.; et al., 1949. The passage of vitamin A from mother to young in the rat. Brit. Jour. Nutrition. 3(4): 301-319.

(3828) Henry, K. M. and S. Y. Thompson., 1954. Die Bestimmung der Vitamine A und D in Milch und Milchprodukten. Milchwissenschaft 9: 14-15.

(3829) Henschen, C., 1941. Vitamin A-hypervitaminosis in man (atoxic Carotinosis and genuine A-toxicosis). Schweiz. Med. Wchnschr. 71: 331-334.

(3830) Hentges, J. F. Jr.; et al., 1952. Experimental avitaminosis A in young dogs. J. Am. Vet. Med. Assoc. 120: 213-216.

(3831) Herbertson, M. A., 1955. The reversibility of the effect hypervitaminosis A on embryonic limb bones cultivated in vitro. Jour. Embryol. and Exptl. Morphol. 3(4): 355-365.

*(3832) Herbst, E. I.; et al., 1944. Telangiectatic liver and vitamin A toxicity. Science 100: 338-339.

(3833) Herfort, K., 1938. Effect of vitamin A on the secretion of the pancreas. Acta Med. Scand. 96: 425-437.

(3834) Herfort, K., 1939. Vitamin A-influence on external secretion of pancreas. Casop. Lek. Cesk. 78: 613-618.

(3835) Herfort, K., 1939. Vitamin A-effect on external secretion of pancreas. Casop. Lek. Cesk. 78: 943-947.

(3836) Heringa, G. C., and J. H. C. Ruyter. 1940. The action of gonadotropic hormones in avitaminotic female rats. Acta. Brevia Neerland. Physiol., Pharmacol., Microbiol. 10: 27-28.

(3837) Herissey, A., 1946. Proprietes antioxygenes des carotenoids et de leurs derives. Compt. Rend. Acad. Sci. 223: 47-49.

(3838) Hermann, P., 1933. Uber die hormonale Beeinflussung des Stoffwechsels von uberlebendem Schilddrusengewebe. Arch. Exptl. Path. u. Pharmakol. 173(4/6): 513-525.

(3839) Hermano, A. J., 1930. Vitamin A-inBaselia rubra, Capsicum frutescens. and Vigna sinensis. Philippine J. Sc. 41: 387-401.

(3840) Hermano, A. J., and P. J. Aguila., 1935. Vitamin contents of Phillipine foods. IV. Vitamins A and $B_1$ in various fruits and vegetables. Philippine J. Sci. 58: 425-433.

(3841) Hermsdorff, G., and O. de L. Peckholt. 1939. Riqueza vitaminica dos eleos de figado dos peixes desmobranquies brasileiros. (Cacoes e raias). Bol. Min. Agric. (Rio de Janeiro) 28(7/9): 83-104.

(3842) Hernandez, J. D., 1950. Chemical and nutritional analysis of Fissurella crassa meat. Anales facultad Farm. y Bioquim. Univ. Nacl. Mayor San Marcos 1: 131-134.

(3843) Herner, M. C., 1937. Relative vitamin A contents of three varieties north-western dent corn--Manitoba-grown Red, Yellow and American Yellow. Sci. Agr. 18: 32-36.

(3844) Herraiz, M. L.; et al., 1943. Vitamin content of dehydrated eggs. Rev. Asoc. Argentina Dietol. 1(1): 46-48.

(3845) Herre, H. D., 1963. Behavior of the blood levels of vitamin E, vitamin A, and beta-carotene in pregnancy during delivery, and in the postpartum stage. Z. Geburtshilfe Gynaekol. 161(1): 46-55.

(3846) Herre, H. D., 1963. Effect of the menstrual cycle on the blood levels of beta-carotene vitamin A, and vitamin E in the female. Z. Geburtshilfe Gynackol. 160(3), 240-250.

(3847) Herreid, E. O., 1956. Recent developments in processing sterile milk and sterile concentrated milk. Lait, 36: 14-26.

(3848) Herrera, J. S. M., 1952. Therapeutic results of vitamin A and D shock in suppurating processes of middle ear and paranasal sinuses. An. Casa. Salud. Valdecilla. 13: 383-386.

(3849) Herrera, L. M. 1949. The bromatological analysis of (lake) trout. Actas. y. Trabajos. Congr. Peruano. Quim., 3 Congr. (Lima, Peru). 2: 483-485.

(3850) Herrin, R. C. 1939. Influence of vitamin A on urea clearance in the rat. Proc. Soc. Exptl. Biol. Med. 42: 695-699.

(3851) Herrin, R. C., and H. J. Nicholes. 1939. The influence of vitamin A upon urea and inulin clearance in the dog. Amer. Jour. Physiol. 125(4): 786-801.

(3852) Herrin, R. C., and H. J. Nicholes. 1940. The influence of vitamin A upon urea clearance in the human subject. Jour. Clin. Invest. 19(3): 489-492.

(3853) Herrin, R. C. 1940. Gastric emptying time and acidity in avitaminosis A in dogs. Am. J. Digestive Diseases Nutrition. 7: 164-166.

(3854) Herrington, B. L. 1946. Butter tested for vitamin A. Exptl. Sta. Record. 94: 545-546, Farm Research 11(4): 1-6.

(3855) Herriott, R. M. 1953. Symposium on nutrition. The physiological role of certain vitamins and trace elements. xvi+297p. Portrait. Illus. Johns Hopkins Press: Baltimore 18, Md.

(3856) Herrmann, J. B. ; et al. 1969. Stimulation of fibroplasia by vitamin A. Surg. Forum. 20: 500-501.

(3857) Herrnring, G., and U. Wilbrand. 1950. Resorption of carotene, and carotene and vitamin A blood values in undernourished persons. I. Method of vitamin A and carotene determination. Klin. Wochschr. 28: 457-459.

(3858) Herschberg, A. D. ; et al. 1970. Vitamin A in gynecology. Gynec. Prat. 21: 53-67.

(3859) Hershberger, T. ; et al. 1951. Meat. III. The biochemistry and quality of meat in relation to certain feeding management practices. Food Technol. 5: 523-527.

(3860) Herting, D. C. ; et al. 1962. Determination of 9-cis isomers of vitamin A by reaction with opsin. Anal. Biochem. 4: 459-475.

(3861) Herting, D. C. ; et al. 1962. Determination of 9-cis isomers of vitamin A by reaction with opsin. Fed. Proc. 21(2): 475. In: 46th. Annual Meeting, Atlantic City, New Jersey, April 1962.

(3862) Hertz, J. 1936. Studies on the healing of fractures, with special reference to the significance of the vitamin content of the diet. Acta. Path. et Microbiol. Scand. Suppl. 28: 1-286.

(3863) Herzen, E. I. 1966. Correlation of A-vitamin activity of milk with different factors. Intern. Dairy Congr., Proc. 17th, Munich. 1: 319-323.

(3864) Herzer, B. 1935. Vitamin A-production of anemia of pernicious type in rats deprived of vitamin. Semana. Med. 2: 1629-1641.

(3865) Hess, A. F. ; et al. 1921. Experimentelle Rachitis bei Ratten. II. Das Ausbleiben des Auftretens von Rachitis bei Ratten unter einer Kost, welcher Vitamin A fehlt. Journ. Biol. Chem. 47: 395-410.

(3866) Hess, A. F. 1921. Das antiskorbutische Vitamin. Journ. Ind. and Engin. Chem. 13: 1115-1116.

(3867) Hess, A. F. ; et al. 1932. Eine Untersuchung der Milch, des Blutes und der Exkrete von Kuhen bei Zufuhr von ma igen und uberma igen Mengen bestrahlter Hefe oder bestrahlten Ergosterins. Journ. Biol. Chemistry. 97: 369-377.

(3868) Hess, A. F., and J. M. Lewis. 1932. Milk irradiated by the carbon arc lamp: A clinical and laboratory study of rickets. J. Am. Med. Assoc. 99: 647-653.

(3869) Hess, A. F. ; et al. 1933. Does our dietary require vitamin A supplement? J. American Med. Asso. 101: 657-663.

(3870) Hess, A. F., and D. B. Kirby. 1933. Incidence of xerophthalmia and night blindness in the United States--a gage of vitamin A deficiency. Am. J. Pub. Health. 23: 935-938.

(3871) Hetler, R. A. 1934. The development of xerophthalmia and the keratinization of epithelial tissue on withdrawal of vitamin A from the diet of the monkey (Macacus rhesus), guinea pig, rabbit, and adult albino rat. Jour. Nutrition. 8(1): 75-103.

(3872) Heubner, W., and K. Schubel. 1932. Vitamin A-in commercial food products. Klin. Wchnschr. 11: 1142-1143.

(3873) Heywang, B. W., and R. B. Morgan. 1937. Some symptoms of vitamin A deficiency in chicks. Poultry Sci. 16: 388-392.

(3874) Heywang, B. W. 1952. The level of vitamin A in the diet of laying and breeding chickens during hot weather. Poultry Sci. 31(2): 294-301.

(3875) Heywood, R. 1967. Vitamin A in the liver and kidney of some Felidae. Brit. Vet. J. 123(9): 390-396.

(3876) Hibbs, C. M. 1965. Pathology of dairy calves subjected to avitaminosis A, E, and A and E semipurified diets. Dissertation Abstr. 26(6): 3257-3258. Unis. Microfilm (Ann Arbor, Mich.) Order No. 65-12, 631.

(3877) Hibbs, J. W. ; et al. 1946. Milk fever in dairy cows. II. The effect of vitamin D on some of the blood changes in normal and milk-fever cows at parturition. J. Dairy Sci. 29: 767-781.

(3878) Hibbs, J. W., and W. E. Krauss. 1947. The effect of thyroprotein (protamone) on milk production and on some of the constituents of the milk and blood of dairy cows. J. Animal Sci. 6: 161-173.

(3879) Hibbs, J. W., and W. D. Pounden. 1948. The influence of the ration and early rumen development on the changes in the plasma carotenoids, vitamin A and ascorbic acid of young dairy calves. Jour. Dairy Sci. 31(12): 1055-1062.

(3880) Hibbs, J. W. ; et al. 1949. The relation of the carotenoid and vitamin A content of summer milk to the carotenoid content of the pasture herbage. J. Dairy Sci. 32: 955-960.

(3881) Hickman, K. C. D. 1937. Molekulardestillation. Der Zustand der Vitamine in gewissen Fischleberolen. Ind. Engng. Chem. 29: 1107-1111.

(3882) Hickman, K. C. D. ; et al. 1942. Interrelationship of vitamins A and E. Nature. 150: 91-92.

(3883) Hickman, K. C. D. ; et al. 1944. Covitamin studies. I. The sparing action of natural tocopherol concentrates on vitamin A. Jour. Biol. Chem. 152(2): 303-311.

(3884) Hickman, K. C. D. ; et al. 1944. Vitamin A-covitamin studies; sparing equivalence of tocopherois and mode of action. J. Biol. Chem. 152: 321-328.

(3885) Hicks, R. M. 1968. Hyperplasia and cornification of the transitional epithelium in the vitamin A-deficient rat: Changes in fine structure of the cells. J. Ultrastruct. Res. 22(3/4): 206-230.

(3886) Hida, M. 1959. Uber das Produkt der Oxydation von Vitamin-A-Acetat mittels Linolsauremethylester mit hoher Peroxydzahl. 1. Mitt. Isolierung des 2.4-Dinitrophenylhydrazons des Oxydationsproduktes. Vitamins (Kyoto). 16: 149-152.

(3887) Hierons, R. 1970. Papilloedema not needing neurosurgery. Trans. Ophthalmol. Soc. UK. 89: 147-157.

(3888) Higashi, H. 1940. Relation between oil content of fish liver and vitamin A content of liver oil. Jour. Agric. Chem. Soc. Japan (Nippon Nogeikagaku Kaisi). 16(11): 169-170.

(3889) Higashi, H., and M. Hirai. 1944. The vitamins of fish livers. V. Colorimetry of nicotinic acid by the cyanogen bromide method. J. Agr. Chem. Soc. Japan. 20: 15-22.

(3890) Higashi, H. ; et al. 1953. Fluctuation of the vitamin A content in fishes. I. Vitamin A in the dogfish, Squalus suckleyi. Bull. Japan. Soc. Sci. Fisheries. 18: 310-318.

(3891) Higashi, H. ; et al. 1953. Studies on fluctuation of the vitamin A content in fishes. II. Study on vitamin A in sharks. Bull. Japanese Soc. Sci. Fish. 18(8): 349-352.

(3892) Higashi, H. ; et al. 1955. Studies on utilization of the liver oil of deep sea sharks. XI. Vitamin A content and molecular-distillation of the liver oil of deep sea sharks. Bull. Japanese Soc. Sci. Fish. 21(6): 448-453.

(3893) Higashi, H. ; et al. 1955. Utilization of unexplored marine animals for feed. I. Production of starfish solubles for feed. Bull. Japan. Soc. Sci. Fisheries. 21: 271-279.

(3894) Higashi, H. ; et al. 1955. Vitamin A content of Heteroscymnus longus, a deep-sea shark. Vitaminology. 1: 200-207.

(3895) Higashi, H. ; et al. 1958. Vitamin contents in the lamprey, Entosphenus japonicus Martens. Jour. Vitaminol. 4(2): 88-99.

(3896) Higashi, H. ; et al. 1959. Studies on the economical manufacture of vitamin A concentrate from fish liver oil--IX. Purification of vitamin A concentrate with methanol. Bull. Japanese Soc. Sci. Fish. 25(1): 59-66.

(3897) Higashi, H. ; et al. 1959. Studies on the vitamin oil extraction -- I. Loss of vitamin A in the alkali digestion method. Bull. Tokai. Reg. Fish. Res. Lab. 26: 69-73.

(3898) Higashi, H. ; et al. 1960. Studies on fluctuation of the vitamin A content in fishes -IV. Vitamin A and lipids in eel. Bull. Tokai. Reg. Fish. Res. Lab. 28: 217-230.

(3899) Higashi, H. ; et al. 1962. The vitamin A content in fish. V. Vitamin A in rainbow trout. Nippon Suisan-Gakkaishi. 28: 715-721.

(3900) Higashi, H., and J. Yamada. 1962. Histochemical observation of vitamin A and fat in the organs of lamprey. Jour. Vitaminol. (Osaka). 8(3): 235-244.

(3901) Higashi, H. ; et al. 1965. Vitamins in salted sea urchin gonads. Eiyo. To. Shokuryo. 18(2): 134-137.

(3902) Higasi, H. 1940. Relations between age of fish and vitamin-A content of the liver oil. II. Investigations on the vitamins of fish livers. J. Agr. Chem. Soc. Japan, Bull. 16: 179-180.

(3903) Higgins, C. C. 1933. Vitamin A-experimental production of urinary calculi. J. Urol. 29: 157-170.

(3904) Higgins, C. C. 1933. Experimental production of urinary calculi in rats (by vitamin A deficient diet). Journal-Lancet. 53: 522-524.

(3905) Higgins, C. C. 1934. Vitamin A-experimental production of urinary calculi in rats (by deficient diet). Urol. and Cutan. Rev. 38: 33-39.

(3906) Higgins, C. C. 1935. Vitamin A-production and solution of urinary calculi; experimental and clinical studies. J. American Med. Asso. 104: 1296-1299.

(3907) Higgins, C. C. 1935. Experimental and clinical observations on urinary calculi (role of vitamin A). New England J. Med. 213: 1007-1012.

(3908) Higgins, C. C. 1935. Vitamin A-experimental production of urinary calculi (by deficient diet); further observations. Tr. Am. A. Genito-Urin. Surgeons. 28: 157-162.

(3909) Higgins, C. C. 1936. Urinary lithiasis. Experimental production and solution with clinical application and end-results. J. Urol. 36: 168-177.

(3910) Higgins, C. C. 1936. Vitamin A-experimental production of urinary calculi (by vitamin deficient diet); further observations. Cleveland Clin. Quart. 3: 242-244.

(3911) Higgins, C. C. 1938. Vitamin A-dietary regimen in treatment of renal calculi. Journal-Lancet. 58: 9-12.

(3912) Higgins, C. C. 1939. Factors in recurrence of renal calculi. Jour. Amer. Med. Assoc. 113(16): 1460-1465.

(3913) Higgins, C. C. 1951. Experimental production of urinary calculi. Jour. Amer. Vet. Med. Assoc. 118(887): 81-85.

(3914) High, E. G., and H. G. Day. 1951. Effects of different amounts of lutein, squalene, phytol and related substances on the utilization of carotene and vitamin A for storage and growth in the rat. Jour. Nutrition. 43(2): 245-260.

(3915) High, E. G., and S. S. Wilson. 1953. Effects of vitamin β12 on utilization of carotene and vitamin A by rat. J. Nutrition. 50: 203-212.

(3916) High, E. G. 1954. Studies on the absorption, deposition and depletion of vitamin A in the rat. Arch. Biochem. and Biophys. 49(1): 19-29.

(3917) High, E. G. ; et al. 1954. Antioxidant studies concerned with the metabolism of carotene and vitamin A. J. Biol. Chem. 210: 681-686.

(3918) High, E. G., and S. S. Wilson. 1956. Studies on vitamin A ester:Alcohol partition between the liver, kidneys and plasma of rats. Arch. Biochem. and Biophys. 62(1): 163-172.

(3919) High, E. G. 1956. Antioxidant studies concerned with the metabolism of carotene and vitamin A. Arch. Biochem. and Biophys. 60: 456-462.

(3920) Highman, S. E. 1943. The vitamin A content of some South African dairy products. S. African J. Med. Sci. 8: 28-34.

(3921) Highman, S. E. 1944. The normal plasma carotene and vitamin A levels in young adults--European, Indian and Bantu. S. African J. Med. Sci. 9: 69-73.

(3922) Higuchi, K. ; et al. 1946. Relation of corn and alfalfa silage to the quality of cheese and its carotene and vitamin A content. Jour. Dairy Sci. 29(3): 157-162.

(3923) Higuchi, K., and W. H. Peterson. 1946. The carotene and vitamin A contents of Wisconsin cheese. Jour. Dairy Sci. 29(11): 789-794.

(3924) Hildebrandt, A. 1944. Uber die Vitamine der Frauenmilch. Med. Klin. 40(27/28): 402-403.

(3925) Hildebrandt, A. 1951. Vitamine der Frauenmilch. Sammelref. uber die in Frauenmilch vorkommenden Vitamine A, D, E, K, B , B , C, Pyridoxin, Nicotinsaureamid, Pantothensaure, Inosit, Biotin u. Folsaure. Z. Vitamin-, Hormon- u. Fermentforsch. 4: 492-523.

(3926) Hilditch, T. P. 1944. Some factors affecting the control of oxidative rancidity. Chemistry and Industry. 67-71.

(3927) Hill, F. W. ; et al. 1961. Reinvestigation of the vitamin A requirements of laying and breeding hens and their progeny. Poultry Sci. 40(5): 1245-1254.

(3928) Hill, H., and K. H. Siegmund. 1957. Beitrage zum Vitamin E-Stoffwechsel. 1. Mitt. Vitamin-A-Schutz durch VitaminE bei experimenteller Chlornaphthalinvergiftung. Dtsch. Tierarztl. Wschr. 64: 304-306.

(3929) Hill, H., and K. Funken. 1957. Reports on vitamin E metabolism. II. The storage of vitamin E in fat and its relation to the vitamin A content of the liver of swine. Deut. Tierarztl. Wochschr. 64: 353-354.

(3930) Hill, H., and Y. Hassan. 1962. Vitamin E hypervitaminosis in fowls. Mezhdun. Konf. Vitamin., Dokl. Suobsht., Sofia 1960: 255-261.

(3931) Hill, P., and D. Dvornik. 1966. Effect of the cholesterol biosynthesis inhibitor AY-9944 on serum lipoproteins of rats, pigs, and dogs. Proc. Soc. Exptl. Biol. Med. 122(4): 1223-1228.

(3932) Hillman, R. W. 1949. Effect of adrenaline on vitamin A and glucose blood levels in normal and cirrhotic subjects. J. Lab. Clin. Med. 34: 1279-1283.

(3933) Hillman, R. W. ; et al. 1955. Plasma concentrations of vitamin A, carotene and tocopherols in rheumatic fever during ACTH (adrenocorticotropic hormone) therapy. New York J. Med. 55: 2787-2789.

(3934) Hillman, R. W. ; et al. 1955. Blood plasma vitamin A/ carotene ratio and tocopherol concentration in relation to the metabolic state. Am. J. Digestive Diseases. 22: 128-131.

(3935) Hillman, R. W. 1956. Hypervitaminosis A. Am. J. Clin. Nutrition. 4: 603-608.

(3936) Hillman, R. W., and N. H. Becker. 1957. Absorption of ingested vitamin A. Gastroenterology. 32(4): 738-746.

(3937) Hillman, R. W., and M. C. Rosner. 1958. Effects of exercise on blood (plasma) concentrations of vitamin A, carotene and tocopherols. J. Nutrition. 64(4): 605-614.

(3938) Hilton, J. H. ; et al. 1933. Erhaltung des Vitamin-A-Gehaltes von Butter bei den Bedingungen der Winterfutterung. J. Dairy Sci. 16: 355-361.

(3939) Hilton, J. H. ; et al. 1935. The vitamin A activity of butter produced by cows fed alfalfa hay and soybean hay cut in different stages of maturity. J. Dairy Sci. 18: 795-800.

(3940) Hilton, J. H. ; et al. 1942. Producing milk rich in vitamin A. Purdue Agr. Exptl. Sta. Circ. 274: 7pp.

(3941) Hilz, H. ; et al. 1960. Activation of sulfate metabolism by feeding cholesterol and other atherogenic means. Drugs Affecting Lipid. Metab., Proc. Symp., Milan 1960. 323-327.

(3942) Hilz, H. 1962. Anderungen von Enzym-Aktivitaten in der Gefa wand bei Atherosklerose. J. Atheroscler. Res. (Amsterdam). 2: 252-262.

(3943) Hinds, F. C. ; et al. 1968. Influence of aspiration biopsy of liver on cattle gains and liver vitamin A values. J. Anim. Sci. 27(2): 505-508.

(3944) Hinds, F. C. ; et al. 1968. Extracting vitamin A from liver. J. Anim. Sci. 27(6): 1678-1681.

(3945) Hing, T. K. 1965. Serum vitamin and protein levels in fundus xerophthalmicus. Trop. Geogr. Med. 17: 273-281.

(3946) Hipolito, O., and I. F. Huddleson. 1953. Determination by the paper disk agar plate method of the effect of some chemical agents on Brucella. Arquiv. Escola. Super. Vet. Estado. Minas. Gerais. 6: 75-95.

(3947) Hipsley, E. H. 1954. Nahrstoffzusatze zum Brot. Med. J. Australia. 41(2): 45-51.

(3948) Hipsley, E. H. 1961. Food-enrichment policies in Pacific Islands, with special reference to iodized salt, thiamine-fortified rice, and vitamin-A fortified foods. Pacific Sci. Congr. Abstr. Symp. Pap. 10: 396-397.

(3949) Hirado, S., and T. Kinumaki. 1952. Lipides of the pyloric cecum of the cod (Gadus macrocephalus). Bull. Japan. Soc. Sci. Fisheries. 17(8/9): 32-38.

(3950) Hirado, S. ; et al. 1952. Determination of vitamin A in fish meat, dairy products and margarine. Bull. Japanese Soc. Sci. Fish. 18(2): 73-77.

(3951) Hirado, S. ; et al. 1954. Vitamin A in fish meat. I. Variation in the vitamin A content in fish meat by anatomical locality. Bull. Japanese Soc. Sci. Fish. 19(10): 1047-1059.

(3952) Hirado, S. ; et al. 1955. Vitamin A in fish meat. IV. Vitamin A content in the skin of fishes. Bull. Japanese Soc. Sci. Fish. 21(6): 454-457.

(3953) Hirado, S. ; et al. 1955. Vitamin A in fish meat. III. Individual fluctuation in the vitamin A content. Bull. Japan. Soc. Sci. Fisheries. 20: 853-859.

(3954) Hirado, S. ; et al. 1955. Vitamin A in fish meat. V. Relation between vitamin A and carotenoid pigment in the skin of mackerel. Bull. Japanese Soc. Sci. Fish. 21(8): 962-966.

(3955) Hirado, S. ; et al. 1959. Vitamin A in fish flesh. Bull. Tokai. Reg. Fish. Res. Lab. 25: 49-65.

(3956) Hiraishi, T. 1928. Greater rapidity of infection of young pigs with ascariasis after feeding with food deficient in Vitamin A; experimental study. Arch. f. Schiffs-u. Tropen-Hyg. 32: 519-521.

(3957) Hirayama, K., and K. Inoue. 1967. Determination of vitamin D in the presence of vitamin A by cylindrical thin-layer chromatography. J. Pharm. Sci. 56(4): 444-449.

(3958) Hironaka, R. 1968. Elimination of dieldrin from beef cattle. Can. Vet. J. 9(8): 167-169.

(3959) Hirose, K. 1943. Experimental studies on the growth of tumors. I. -Anterior hypophysis hormone and vitamin A as growth promoting substances. Japan. J. Microbiol. Path. 37: 594-634.

(3960) Hirota, O. 1937. The relation between the thymus gland, vitamins and avitaminosis. I. The effect of the thymus gland on avitaminosis B. Folia Endocrinol. Japon. 13: 41-42.

(3961) Hirota, O. 1937. Beziehungen zwischen Thymus und Vitaminen. I. Beziehungen des Thymus zu den Avitaminosen. II. Studien uber den Einfluβ der Thymusdruse auf die A-Avitaminose. Folia Endocrinol. Japon. 13: 43-44

(3962) Hirota, O. 1938. Histological changes of the thymus gland in avitaminoses A, B, C and D. Folia Endocrinol. Japon. 13: 69.

(3963) Hirota, O. 1938. Histological changes of the thymus gland in hypervitaminoses A, B, C and D. Folia Endocrinol. Japon. 13: 70.

(3964) Hirsch, W., and E. Fischer. 1955. Chemical examination of blood in mentally retarded children. Harefuah. 48: 27-29.

(3965) Hirsch, W., and A. Mex. 1958. Carotene and vitamin A metabolism. Monatsschr. Kinderheilk. 106: 210-212.

(3966) Hirsch, W. ; et al. 1967. Hyperthyroidism therapy with vitamin A. Ther. Gegenw. 106: 251-256.

(3967) Hirschi, R. G. 1950. Vitamin A-postextraction healing in deficient hamsters. J. Oral. Surg. 8: 3-11.

(3968) Hirst, J. C., and R. E. Shoemaker. 1940. Vitamin A-in pregnancy; average capacity according to Feldman adaptometer. Am. J. Obst. and Gynec. 40: 12-16.

(3969) Hirst, J. C., and R. E. Shoemaker. 1941. Vitamin A in pregnancy. II. Comparison of dark adaptation and serum tests. Amer. Jour. Obstet. and Gynecol. 42(3): 404-408.

(3970) Hissink, L. A. G. 1942. Carotene-vitamin A metabolism, blood protein picture and the reticulo-endothelial system of Aschoff. Nederland Tijdschr. Geneeskunde. 86: 3200-3206.

(3971) Hiyama, A. ; et al. 1964. Effect of yeast on the intake of carotene. Keio. J. Med. 13(1): 59-65.

(3972) Hjarde, W. 1950. Spectrophotometric determination of vitamin A by means of chromatography. Acta. Chem. Scand. 4(4): 628-640.

(3973) Hjarde, W. ; et al. 1952. The nutritional value of some Greenland foodstuffs. Nord. Med. 48: 123-125.

(3974) Hjarde, W. ; et al. Utilization of carotene by dairy cows. Acta. Agr. Scand. 4: 3-16.

(3975) Hjarde, W. ; et al. 1961. Investigations concerning vitamin A requirement, utilization and deficiency symptoms in pigs. Acta. Agric. Scand. 11(1): 13-53.

(3976) Ho, N. 1960. Testikulare Lasionen der Ratte bei Hyper-vitaminose A. Vitamins Kyoto. 21: 416-419.

(3977) Hoagland, R., and G. G. Snider. 1925. Vitamin A in beef, pork and lamb. J. Agr. Research. 31: 201-221.

(3978) Hoagland, R., and G. G. Snider. 1926. Vitamin A in Oleool und Oleostearin. Journ. Agricult. Research. 32: 397-416.

(3979) Hoagland, R., and A. R. Lee. 1926. Vitamin A in poultry flesh and fat. Jour. Agric. Res. 33(1): 29-40.

(3980) Hoar, D. W. ; et al. 1968. Nitrate and vitamin A interrelationships in sheep. J. Anim. Sci. 27(6): 1727-1733.

(3981) Hoch, H. 1943. Micro-method for estimating vitamin A by the Carr-Price reaction. Biochem. Jour. 37(3): 425-429.

(3982) Hoch, H. 1943. The effect of prolonged administration of carotene in the form of vegetables on the serum carotene and vitamin A levels in man. Biochem. Jour. 37(3): 430-433.

(3983) Hoch, H. 1946. State of vitamin A in human serum. Nature (London). 158: 59.

(3984) Hoch, H., and R. Hoch. 1946. The state of vitamin A in human serum. Brit. Jour. Exptl. Path. 27(5): 316-328.

(3985) Hoch, H. ; et al. 1948. Composition of the blood of women during pregnancy and after delivery. J. Obstet. Gynaecol. Brit. Empire. 55: 1-16.

(3986) Hochberg, M. 1948. Determination of vitamin A in milk. Jour. Dairy Sci. 31(4): 315-321.

(3987) Hochberg, M. 1957. Vitaminpraparat aus Fischleber. E. P. 782 066 vom 3/2.

(3988) Hochstadt, O., and S. Malkiel. 1944. Antithyroidal substances of the blood and vitamin A. Proc. Soc. Exptl. Biol. Med. 56: 22-23.

(3989) Hodgson, R. E. 1936. The color, carotene and vitamin A content of milk as influenced by the feed. Proc. 9th Ann. State Coll. Wash. Inst. Dairying. 133-136.

(3990) Hodgson, R. E. ; et al. 1939. Vitamin A activity and its relation to the carotene content of pea cannery refuse. Western Wash. Agr. Exptl. Sta. (Puyallup), Ann. Rept. 16-17.

(3991) Hodgson, R. E. ; et al. 1946. The effect of vitamin A deficiency on reporduction in dairy bulls. Jour. Dairy Sci. 29(10): 669-688.

(3992) Hodgson, R. W. 1950. The avocado-a gift from the middle Americas. Econ. Botany. 4: 253-293.

(3993) Hoefer, J. A., and W. D. Gallup. 1946. The effect of carotene intake on the vitamin-A contents of the liver and blood of lambs. Proc. Oklahoma Acad. Sci. 26: 21-24.

(3994) Hoefer-Janker, H. ; et al. 1969. 1st clinical experience with subtoxic vitamin A doses during radiation and cytostatic tumor therapy. Krebsarzt. 24: 203-207.

(3995) Hoefer-Janker, H. ; et al. 1971. Treatment of ichthyosis congenita using maximum dosate of vitamin A. Z. Haut. Geschlechtskr. 46: 79-94.

(3996) Hoegler, F. 1942. Parenterale Carotinzufuhr und Vitamin A-Stoffwechsel. Klin. Wochenschr. 21: 25-30.

(3997) Hoekstra, W. G. ; et al. 1954. The relation of vitamin A to the development of hyperkeratosis (X disease) in calves. Am. J. Vet. Research. 15: 41-46.

(3998) Hoekstra, W. G. ; et al. 1954. Production of hyperkeratosis in calves with a topically applied oil-based insecticide carrier. Am. J. Vet. Research. 15: 47-50.

(3999) Hoeller, H. ; et al. 1968. About the utilization of animal fat and meat scraps in feeding young pigs: I. Gain of bodyweight, feed conversion, backfat thickness, composition of depot fat and test of liver function. Z. Tierphysiol. Tierernaehr. Futtermittelk. 24(2): 69-81.

(4000) Hoet, J. 1923. Notiz uber den Mangel an Vitaminen A bei der Taube. Biochemical Journ. 18: 412-413.

(4001) Hoet, J. 1929. Vitamin A-review of literature. Rev. Belge. Sc. Med. 1: 645-667.

(4002) Hoff, J. J. 1933. Effect of household cooking and canning on the vitamin contents of vegetables. Z. Ernahr. 3: 355-359.

(4003) Hoff, F. 1934. Clinical and experimental contributions on calcium output. Verhandl. Deut. Ges. Inn. Med., 46th Congr. 441-447.

(4004) Hoff, F., and B. zu Jeddeloh. 1934. Parathyroid hormone and vitamin A. Z. Ges. Exptl. Med. 95: 67-75.

(4005) Hoff, H. 1937. Vitaminstorungen des Zentralnervensystems und ihre Therapie. Wien. Med. Wschr. 87: 605-610.

(4006) Hoffman, W. S. and H. A. Dyniewicz. 1946. The effect of alumina gel upon the absorption of vitamin A from the intestinal tract. Gastroenterol. 5(6): 512-522.

(4007) Hoffmann, R. ; et al. 1947. The effect of restricted intake of carotene and vitamin A on psoriasis vulgaris. A preliminary report. New Engl. J. Med. 236: 933-937.

(4008) Hoffmann, R. ; et al. 1950. The sex difference in vitamin A metabolism. Jour. Invest. Dermat. 15(6): 409-419.

(4009) Hogan, A. G. ; et al. 1929. The effect of inadequate rations on the composition of the blood and of the bone of chicks. Missouri Agric. Exptl. Sta. Res. Bull. 124: 17p.

(4010) Hogan, A. G. ; et al. 1932. Wirkung von radioaktiven stoffen auf Vitamine. Journ. Nutrit. 5: 413-420.

(4011) Hogler, F. 1942. Parenteral administration of carotene and vitamin A metabolism. Klin. Wochschr. 21: 25-30.

(4012) Hohlweg, W., and M. Dohrn. 1930. Kolpokeratose, ein Test fur Vitamin A. Zeitschr. Ges. Exptl. Med. 71(5/6): 762-767.

(4013) Hohlweg, W., and M. Dohrn. 1930. Die Bestimmung von Vitamin A auf Grund seines Einflusses auf den Vaginalinhalt der Ratte. Biochemical J. 30: 932.

(4014) Hohlweg, W., and M. Dohrn. 1931. Apparent permanent oestrus in rats after diet free from vitamin A. Proc. Second Internat. Cong. Sex Research (1930), 76-79.

(4015) Hohlweg, W., and V. Fischl. 1933. Presence of Spirochaeta in vagina of female rats with colpokeratosis, which have been fed on diet free from vitamin A. Klin. Wchnschr. 12: 1139-1140.

(4016) Hohlweg, W., and M. Dohrn. 1936. Vitamin A-determination by means of its influence on vaginal contents of rat. Biochem. J. 30: 932.

(4017) Hohlweg, W. 1951. Vitamin A-inhibition of estrus reaction by overdosage. Klin. Wchnschr. 29: 193-195.

(4018) Hohlweg, W. 1951. Uber die Hemmung der Ostrusreaktion durch Vitamin-A-Uberdosierung. Z. Ges. Innere. Med. Grenzgebiete. 6: 272-277.

(4019) Hohlweg, W. 1952. Assay of vitamin A preparations by means of the antiestrus reaction. Pharmazie. 7: 280-284.

(4020) Hohlweg, W., and U. Laschet. 1958. Vitamin A and the sexual cycle. Vitamine u. Hormone. 8: 164-184.

(4021) Hohmann, W. J., and G. W. Beening. 1947. Epidemic of comedones and vitamine-A deficiency. Nederland. Tijdschr. Geneesk. 1947: 1465-1469.

(4022) Holderer, M. 1942. Bread with spent brewers' grain. Bull. Assoc. Chim. 59: 716-720.

(4023) Holland, B. K., and W. C. Winder. 1951. Herstellung von angereicherter Magermilch. Milk Dealer 40. Nr. 11. 43: 92-96.

(4024) Holland Patent. 20 216 vom 7/6. 1927. Oss, Herstellung von Vitamin A enthaltenden hydrierten Fetten.

(4025) Hollenberg, M. J., and M. H. Bernstein. 1966. Fine structure of the photoreceptor cells of the ground squirrel (Citellus tridecemlineatus tridecemlineatus). Amer. J. Anat. 118(2): 359-373.

(4026) Holloway, P. J., and M. Mellanby. 1961. Effect of hypervitaminosis A on the development of rat tooth germ in tissue culture. Arch. Oral. Biol. 5: 190-194.

(4027) Holm, E. 1925. Demonstration of hemeralopia in rats nourished on food devoid of fat-soluble-A-vitamin. Am. J. Physiol. 73: 79-84.

(4028) Holm, E. 1929. Vitamin A-demonstration in retinal tissue; comparison with vitamin content of brain tissue. Acta. Ophth. 7: 146-161. Hospitalstid. 72: 139-152.

(4029) Holm, E., and M. Bojesen. 1929. Demonstration of vitamin A in retinal tissue. Hospitalstidende. 72(6): 139-152.

(4030) Holm, G. E. 1928. Vitamins A, D and E and the oxidation of fats and oils. Science. 67: 424-425.

(4031) Holm, K. 1934. Experimentelle Untersuchungen uber die Beziehungen der Lipolyse im Blute zu den Abwehrreaktionen des tierischen Organismus unter verschiedenartiger Vitaminzufuhr. Z. Immunitatsforschg. Exptl. Therap. 82: 479-494.

(4032) Holman, J. ; et al. 1970. Histology of healing of skin changes in hypervitaminosis A in chickens. Int. Z. Vitaminforsch. 40: 483-488.

(4033) Holmberg, C. G. 1937. The effect of pasteurization on the vitamin A content of milk. Skand. Arch. Physiol. 76: 109-114.

(4034) Holmes, A. D. 1922. Untersuchungen uber das Vitamin von Lebertranen. I. Die Wirksamkeit rohen Lebertrans, gepre ten Lebertrans und Lebertranstearins. Journ. Metabol. Res. 2: 113-122.

(4035) Holmes, A. D. 1925. Vitaminwirksamkeit von Lebertranen. XI. Butterfette, erzeugt bei Sommerfutterung. Ind. and Engin. Chem. 17: 75-78.

(4036) Holmes, A. D, and M. G. Pigott. 1925. Vitamingehalt von Lebertranen. XIII. Vitamin A-Gehalt von Hundefisch"-Leberol. Ind. and Engin. Chem. 17: 310-311.

(4037) Holmes, A. D., and M. G. Pigott. 1926. Vitamingehalt von Lebertranen. XVIII. Einflu auf den Vitamingehalt bei kaltgepre ten Lebertranen. Ind. and Engin. Chem. 18: 188-189.

(4038) Holmes, A. D. 1922. Studien uber die Vitaminwirksamkeit von Lebertranen. III. Die Wirksamkeit von Pollacklebertran-Fruhsommerole. Journ. Metabol. Res. 2: 361-365.

(4039) Holmes, A. D. 1923. Untersuchungen uber die Vitaminwirksamkeit von Lebertranen. IV. Bis zu welchem Grade ist eine quantitative Bestimmung von Vitamin A moglich? Journ. Metabol. Res. 3: 583-588.

(4040) Holmes, A. D. 1924. Vitaminwirksamkeit von Lebertranen. X. Medizinische Lebertrane. Ind. and Engin. Chem. 16: 1181-1184.

(4041) Holmes, A. D. 1924. Uber die Vitaminwirksamkeit von Lebertran. VII. Die Vitamin A-Wirksamkeit von Rotaugenleberol. Ind. and Engin. Chem. 16: 379-381.

(4042) Holmes, A. D. 1924. Untersuchungen uber die Vitamin-wirksamkeit von Lebertranen. VI. Die Wirkung der Lagerung der Leber auf die Vitamin A-Wirksamkeit des Lebertrans. Ind. and Engin. Chem. 16: 295-297.

(4043) Holmes, A. D., and M. G. Pigott. 1925. Untersuchungen uber den Vitaminwert von Lebertranen. XVII. Der Vitaminwert von Salm-Korperfett. Boston Med. and Surg. Journ. 193: 726-728.

(4044) Holmes, A. D., and M. G. Pigott. 1926. Studies of the vitamin potency of cod liver oils. XX. Effect of light on the vitamin A content of cod liver oil. Boston Med. and Surg. Jour. 195(6): 263-265.

(4045) Holmes, A. D. 1926. Modern cod liver oil as a source of fat soluble vitamins. Boston Med. and Surg. Journ. 194(16): 714-716.

(4046) Holmes, A. D. ; et al. 1926. Untersuchungen uber den Vitamingehalt von Lebertranen. XXI. Die Stimulierung der Erzeugung durch fettlosliche Vitamine. Journ. Amer. Pharmac. Assoc. 16: 518-527.

(4047) Holmes, A. D. ; et al. 1936. Beef, hog, calf and lamb livers as sources of vitamin A. Food Research. 1: 443-455.

(4048) Holmes, A. D. ; et al. 1936. The vitamin A reserve of embryo and baby chicks. Jour. Nutrition. 11(2): 119-128.

(4049) Holmes, A. D. ; et al. 1936. Die Vitamin-A-Speicherung bei Huhnern. Poultry Sci. 15: 71-78.

(4050) Holmes, A. D. ; et al. 1937. Der Einflu von fettloslichen Vitaminen auf die Eiproduktion und die Zusammensetzung der Eischale. Poultry Sci. 16: 404-415.

(4051) Holmes, A. D. ; et al. 1937. Der Vitamin-A-Gehalt von Lebertran. Ein Vergleich der spektrophotometrischen und chemischen Methode. Ind. Engng. Chem., Analyt. Edit. 9: 456-457.

(4052) Holmes, A. D. ; et al. 1938. Vitamin A-reserve of fur-bearing animals. Am. J. Physiol. 123: 693-700.

(4053) Holmes, A. D., and M. G. Pigott. 1942. Comparative stability of vitamin A in cod liver oil and in oleovitamin A and D. Sci. Ed. Jour. Amer. Pharm. Assoc. 31(12): 521-523.

(4054) Holmes, H. N. ; et al. 1933. Comparative studies on the adsorption behavior of crude vitamin A, caotene, and cholesterol. Jour. Biol. Chem. 99(2): 417-427.

(4055) Holmes, H. N. ; et al. 1934. An attempt to isolate vitamin A. Science. 79: 255-256.

(4056) Holmes, J. W. 1946. Night vision. I. A comparison of the scotopic visual ratings of young Japanese and Caucasian adults living in Hawaii. Arch. Ophthalmol. 36(2): 141-154.

(4057) Holst, A. 1924. Vitamin A-degeneration of liver cells of rats from lack of fat-soluble vitamin. Acta. Med. Scandinav., Supplement. 7: 94-97.

(4058) Holt, F. J. 1934. Ein neues Konzentrat zur Erzeugung von Vitamin-D-Milch mit zusatzlicher Vitamin-A-Wirkung. Milk Plant Monthly. 23(9): 30-32.

(4059) Holthausen, L. 1936. Vitamin A-keratomalacia due to deficiency; case in infant. Arch. f. Kinderh. 109: 34-40.

(4060) Holtz, F. and S. Erbe. 1957. Vorschlag fur die Neufassung des Kapitels Lebertran" im DAB 7. Pharmazie. 12: 718-721.

(4061) Honory, K. 1964. The influence of external factors on the level and distribution of vitamin A and carotenoids in an animal body. I. A method to determine vitamin A and carotenoids in the (chick) serum and liver. Bull. Veterinary Inst. Pulawy. 8(3/4): 117-119.

(4062) Honory, K. 1965. Influence of the environment on the level and distribution of vitamin A and carotenoids in the animal organism. I. Method for the determination of vitamin A and carotenoids in the blood serum and in the liver. Polskie Arch. Wet. 9(2): 323-333.

(4063) Hooft, C. 1954. Acute hypervitaminosis A. Maandschr. Kindergeneesk. 22: 271-279.

(4064) Hoover, A. A. 1941. The analysis of Ceylon foodstuffs. X. The mineral analyses of some local yams and vegetables. Trop. Agr. (Ceylon). 97: 185-187.

(4065) Hopkins, F. G. 1920. Uber den gegenwartigen Stand der Vitamine in der klinischen Medizin. Brit. Medical Journal. 147-149.

(4066) Hopkins, F. G. 1923. Der gegenwartige Stand des Vitamin-problems. II. Rachitis als cine Mangelkrankheit. Brit. Medical Journal. 2: 748-750.

(4067) Hopkins, F. G. 1928. Vitamin A-Bestimmung im Lebertran. Vergleich-zwischen der colorimetrischen Methode (Rosenheim, Drummond) und der biologischen Methode fur die Bestimmung von Vitamin A im Lebertran. Lancet. 214: 148-149.

(4068) Hoppe, P. ; et al. 1970. Vitamin A potency of retinoic acid in growth experiments on chickens. Int. Z. Vitaminforsch. 40: 260-269.

(4069) Hoppner, K. ; et al. 1968. Survey of liver vitamin A stores of Canadians. Can. Med. Asso. J. 99(20): 983-986.

(4070) Hoppner, K. ; et al. 1969. Vitamin A reserves of Canadians. Canad. Med. Asso. J. 101: 84-86.

(4071) Hoppner, K. ; et al. 1969. Vitamin A reserves of Canadians. Can. Med. Asso. J. 101(12): 736-738.

(4072) Horacek, J., and B. Konrad. 1958. Absorption and utilization of vitamin A. Ceskoslov. Dermatol. 33: 294-298.

(4073) Horacek, J. 1964. Disturbances in the efficiency and the omission of vitamin A in some dermatoses. Dermatol. Int. 5(1): 45-48.

(4074) Horacek, J. 1966. Disorders in the utilization of vitamin A and vitamin A deficiency in some dermatoses. Derm. Int. 5: 45-48.

(4075) Horn, V. 1934. The addition of vitamins A and D to the food of pigs. Biedermanns Zentr. B. Tierernahr. 6: 203-207.

(4076) Horn, Z. ; et al. 1965. Preventive effect of vitamins A + E on the evolution of cholesterol-induced atherosclerosis. Int. Conf. Gerontol., Budapest 1962, 353-356.

(4077) Horn, Z. ; et al. 1963. Preventive effect of vitamins A and E on the development of arteriosclerosis induced by cholesterol. Z. Vitamin Hormon. Fermentforsch. 13: 1-7.

(4078) Horner, A. A., and R. A. Morton. 1960. Dietary cholesterol and liver vitamin A in normal and castrated male rats. Biochem. J. 74: 301-304.

(4079) Horner, A. A., and R. A. Morton. 1960. Dietary cholesterol and liver vitamin A in normal and castrated male rats. Biochem. Jour. 74(2): 301-304.

(4080) Horner, A. A., and R. A. Morton. 1961. Die Bestandtelle der Leberlipide mannlicher und weiblicher Ratten. 2. Mitt. Wirkungen des Fettmangel-Syndroms, verstarkt durch Cholesterinzufuhr. Biochem. J. 79: 636-642.

(4081) Horning, M. G. ; et al. 1967. The study of urinary acids and related compounds by gas phase analytical methods. J. Gas Chromatogr. 5(6): 297-302.

(4082) Horton, P. B. ; et al. 1941. Vitamin A-determination in blood and liver as index of nutrition of rat. J. Clin. Investigation. 20: 387-393.

(4083) Horton, P. ; et al. 1941. Vitamin A and carotene. I. The determination of vitamin A in the blood and liver as an index of vitamin A nutrition of the rat, by PRISCILLA B. HORTON, WILLIAM A. MURRILL, and ARTHUR C. CURTIS. II. Vitamin A and carotene metabolism in diabetics and normals, by WILLIAM A. MURRILL, PRISCILLA B. HORTON, ESTHER LEIBERMAN, and L. H. NEWBURGH. Journ. Clin. Invest. 20(4): 387-400.

(4084) Horvat, A., and H. Maver. 1958. The role of vitamin A in the occurrence of goiter on the island of Krk, Yugoslavia. J. Nutrition. 66: 189-203.

(4085) Horvat, A. ; et al. 1959. Effect of potassium iodide and vitamin A on the thyroidal uptake and urinary excretion of iodine-131 in goitrous subjects on the island of Krk. J. Nutrition. 68: 647-653.

(4086) Horvat, A. ; et al. 1959. Effect of potassium iodide and vitamin A on the thyroidal uptake and urinary excretion of I 131 in goitrous subjects on the island of Krk. Jour. Nutrition. 68(4): 647-653.

(4087) Horvat, A., and J. M. Merrill. 1961. Effects of 3,5,3 -triiodo-D-thyronine on serum vitamin A and carotenoids in hypothyroidism. J. Nutr. 74: 324-328.

(4088) Horwitt, M. K. ; et al. 1956. Die Wirkungen begrenzter Tocopherolaufnahmen bei Versuchspersonen in Beziehung zur Erythrocytenhamolyse und Fettoxydation. Amer. J. Clin. Nutrit. 4: 408-419.

(4089) Hottinger, A. 1927. Experimentelle Untersuchungen uber das antirachitische Prinzip bestrahlter Nahrung. Ztschr. f. Kinderheilkunde. 43(1927): 8-23.

(4090) Hotzel, D. 1969. Nutritional aspects of quality assessments (of foods). Ernahrungs-Umschau. 16(4): 132-136.

(4091) Hou, H. C. 1935. The interrelationship of vitamins and other dietary constituents. I. Vitamins A and D and other dietary constituents in relation to the formation of urinary calculi. Chinese J. Physiol. 9: 299-306.

(4092) Hou, H. C. 1936. The influence of diet on the formation of urinary calculi. Chinese Med. J. 50: 787-796.

(4093) Hou, H. C. 1936. Vitamin A-relation to health and disease. Chinese Medi. J. 50: 1481-1492.

(4094) Hou, H. C. 1937. Der Einflu der Mengenanderung von Vitamin A und D sowie anderer Nahrungsbestandteile auf die wei e Ratte. J. Physiol. USSR (russ: Fisiologitscheski Shurnal SSSR). 22: 828-838.

(4095) Hou, H. C. 1937. The effect of varying the quantities of vitamins A and D and other dietary constituents on albino rats. J. Physiol. U.S.S.R. 22: 828-834.

(4096) Hou, H. C. 1937. Relation of dietary constituents to urinary calculi formation. Natl. Med. J. China. 23: 127-138.

(4097) Hou, H. C. 1938. Infections observed in experimental animals fed upon certain unbalanced diets. Chinese Med. Jour. 53(1): 47-52.

(4098) Hou, H. C. ; et al. 1939. Nutritional studies in Shanghai. Chinese Med. Assoc., Special Rept. Ser. 12: 92pp.

(4099) Hou, C. T. ; et al. 1965. Vitamin A ester formed by rat intestinal sections from -carotene. J. Biochem. (Tokyo). 58(1): 101-103.

(4100) Houck, J. C., and Y. M. Patel. 1964. Dermal chemical response to vitamin A and papain. Am. J. Pathol. 45(6): 1045-1053.

(4101) Houle, G. R., 1952. Vitamin E deficiency in beef cases. J. Am. Vet. Med. Assoc. 121: 485-487.

(4102) House, H. L., 1965. Effects of vitamin A acetate and structurally related substances on growth and reproduction of Agria affinis (Fallen) (Diptera:Sarcophagidae). J. Insect Physiol. 11(7): 1039-1045.

(4103) House, H. L., 1966. Effects of vitamins E and A on growth and development, and the necessity of vitamin E for reproduction in the parastoid Agria affinis. J. Insect. Physiol. 12(4): 409-417.

(4104) House, Margaret C.; et al., 1929. The vitamin A, B, and C content of artificially versus naturally ripened tomatoes. Jour. Biol. Chem. 81(3): 495-504.

(4105) Houston, J., and S. K. Kon., 1939. Vitamins in rat and guinespig milk. Biochem. J. 33: 1655-1659.

(4106) Hove, E. L., 1953. The toxicity of tri-o-cresyl phosphate for rats as related to dietary casein level, vitamin E, and Vitamin A. J. Nutrition 51: 609-622.

(4107) Howard, F. D.; et al., 1962. Nutrient composition of fresh California-grown vegetables. Calif. Univ., Agr. Exptl. Sta. Bull. 788: 44pp.

(4108) Howe, P. R.; et al., 1940. Studies in carcinogenesis. X. Production of tumors by 3:4 benzpyrene in rats fed diets containing different levels of vitamin A. Amer. Jour. Path. 16(3): 295-300.

*(4109) Howell, J. M.; et al., 1963. Histology of the lesions in the reproductive tract of animals fed a diet deficient in vitamin A alcohol but containing vitamin A acid. J. Reprod. Fertility 5:159-167.

*(4110) Howell, J. McC.; et al., 1964. Histology of the lesions produced in the reproductive tract of animals fed a diet deficient in vitamin A alcohol but containing Vitamin A acid. II. Female rat. J. Reprod. Fertility 7(2):251-258.

(4111) Howell, J. McC., and J. N. Thompson., 1965. Changes in the central nervous system of vitamin A deficient chickens. Brit. J. Exptl. Pathol. 46(1): 18-24.

(4112) Howell, J. McC.; et al., 1967. Reproduction and vision to rats maintained on a retinol-free diet containing 3-dehydroretinol (vitamin A2). Brit. J. Nutr. 21(2): 373-376.

(4113) Howell, J. McC., and J. N. Thompson. 1967. Lesions associated with the development of ataxia in vitamin A-deficient chicks. Brit. J. Nutr. 21(3): 741-750.

(4114) Howell, J. M.; et al., 1967. Changes in the tissues of guinea-pigs fed on a diet free from vitamin A but containing methyl retinoate. Brit. J. Nutr. 21: 37-44.

(4115) Howell, J. McC., and J. N. Thompson. 1967. Observations on the lesions in vitamin A deficient adult fowls with particular reference to changes in bone and central nervous system. Brit. Exptl. Pathol. 48(4): 450-454.

* (4116) Howell, J. McC.; et al., 1969. The development of lesions in vitamin A-deficient adult fowl. Brit. J. Exp. Pathol. 50(2): 181-186.

(4117) Howell, J. M.; et al., 1970. Lesions in nervous tissue and bone in ataxic vitamin A deficient quail. Acta Neuropathol. (Berl) 16:285-292.

(4118) Hoygaard and H. W. Rasmussen., 1938. Die Vitaminversorgung auf einem in Gronland uberwinternden norwegischen Fangschiff. Nord. Med. Tidskr. 15: 728-731.

(4119) Hoygaard, A., 1940. Vitamin A-night blindness as result of deficiency. Klin. Wchnschr. 19: 1139-1140.

(4120) Hoygaard, A.; et al., 1940. Latent hemeralopia in seamen. Nord. Hyg. Tid. 21: 123.

(4121) Hrdlicka, J., 1959. What is guava? Vyzvia Lidu 14(2): 28-29.

(4122) Hruba, F., 1963. Contribution to the estimation of vitamin A in blood serum. Cesk. Hyg. 7: 580-587.

(4123) Hrubetz, M.; et al., 1945. Studies on carotenoid metabolism. V. The effect of a high vitamin A intake on the composition of human milk. Jour. Nutrition 29(4): 245-254.

(4124) Hsu., H. C., 1942. Serum carotinoids and vitamin A in Chinese. Chinces Med. Jour. 61(1): 1-5.

(4125) Hsu, H. C., 1943. Serum carotinoids and vitamin A in Chinese. Chinese Med. J. 61: (U. S. A. Ed.) 239-243.

(4126) Hsu, L., and A. L. Tappel. 1965. Effect of vitamin A on the activity of arylsufatuse and beta-glucuronidae of rat tissue. Biochim Biophys Acta 101(1): 113-120.

(4127) Hsu, K. L., 1927. Vitamin A-nutritional keratomalacia; cases. China M. J. 41: 825-836.

(4128) Huang, J. S., and F. B. Bang., 1964. The susceptibility of chick embryo skin organ cultures to influenza virus following excess vitamin A. J. Exptl. Med. 120(2): 129-148.

(4129) Huang, H. S., and DeWitt S. Goodman., 1965. Vitamin A and carotenoids. I. Intestinal absorption and metabolism of "C-labeled vitamin A alcohol and beta-carotene in the rat. J. Biol. Chem. 240(7): 2839-2844.

(4130) Hubbard, R., and G. Wald. 1952. Cis-trans isomers of vitamin A and retinene in vision. Science 115: 60-63.

(4131) Hubbard, R., and G. Wald., 1952. Cis-trans-Isomers von Vitamin $A_1$ and $Retinen_1$ im Rhodopsinsystem. J. Gen. Physiol. 36: 269-315.

(4132) Hubbard, R., 1953. Respiration of the isolated rod outer limb of the frog retina. J. Gen. Physiol. 37: 373-379.

(4133) Hubbard, R., and A. D. Colman., 1959. Vitamin A content of the frog eye during light and dark adaptation. Science 130: 977-978.

(4134) Hubbard, R., and John E. Dowling., 1962. Formation and utilization of 11-cis-vitamin A by the eye tissues during light and dark adaptation. Nature 193: 341-343.

(4135) Hubbard, R., and A. Kropf., 1967. Molecular isomers in vision. Sci. Amer. 216(6): 64-76.

(4136) Hubbert, F., Jr.; et al., 1962. Influence of high levels of vitamin A on performance and carcass characteristics of fattening cattle. In: 54th annual national meeting of the American Society of Animal Science. Jour. Animal Sci. 21(4): 1000.

(4137) Huenemann, R. L.; et al., 1955. Nutrition and care of young children in Peru. Jour. Amer. Dietetic Assoc. 31(11): 1121-1133.

(4138) Hughes, E. H., 1933. Vitamin A content of barley. J. Agr. Research 47: 487-494.

(4139) Hughes, E. H., 1934. Some effects of vitamin-A deficient diets on reproduction of sows. Jour. Agric. Res. 47(10): 943-953.

(4140) Hughes, J. S.; et al., 1928. The importance of vitamin A and vitamin C in the ration of swine, concerning especially their effect on growth and reproduction. Kansas Agric. Exptl. Sta., Tech. Bull. 23: 48p.

(4141) Hughes, J. S.; et al., 1929. Nerve degeneration resulting from avitaminosis A. J. Nutrition 2: 183-186.

(4142) Hugot, D.; et al., 1962. The protective effect of amber glass bottles against riboflavin and vitamin A losses due to exposure of sterilized milk to light. Ann. Technol. Agric. (Paris) 11(2): 145-152.

(4143) Hugot, D., and J. Canseret., 1966. Seasonal variations of the vitamin A potency of butters produced in different regions of France. Int. Dairy Congr., Proc. 17th, Munich, 3:185-191.

(4144) Hugzita, Y., 1939. Effect of vitamin A on the growth and radio sensitivity of malignant tumors. Part V. The effect of vitamin A on the tissue respiration and glycolysis. J. Obstet. Gnyecol. 22:38-42. Part VI. The effect of an excess and deficiency of vitamin A on the reticulo-endothelial system and its relation to the growth of malignant tumors. Ibid. 42-45. Part VII. The vitamin A content of the tissues of the liver and the malignant tumor. Ibid. 45-48.

(4145) Hulme, E. M., and H. H. Smith. 1928. A critical examination of methods of evaluating vitamin A by means of the growth of rats. Biochem. Jour. 22(2): 504-521.

(4146) Hume, E. M., 1921. Comparison of the growth-promoting properties for guinea pigs of certain diets, consisting of natural foodstuffs. Biochem. J. 15: 30-48.

(4147) Hume, E. M., and H. H. Smith. 1928. Critical examination of methods of evaluating vitamin A by means of the growth of rats. Biochem. J. 22: 504-521.

(4148) Hume, E. M., and H. H. Smith., 1930. The value of foodstuffs for vitamin A. Lancet 2(5599): 1362-1363.

(4149) Hume, E. M., and H. Chick., 1935. Standardization and determination of vitamin A. Med. Research Council (Brit.), Special Rept., Ser. No. 202: 61 pp.

(4150) Hume, E. M.; 1936. Vitamin A-estimation. Nature, London 137:277.

(4151) Hume, E. M., 1937. Vitamin A-estimation. Nature, London 139: 467-468.

(4152) Hume, E. M.; et al., 1939. Some effects of the administration of oestrogens on the organs of castrated and non-castrated male rats partially deprived of vitamin A. Jour. Path. and Bact. 49(2): 291-298.

(4153) Hume, E. M., 1939. Vitamin A-estimation. Nature, London 143: 22-23.

(4154) Hume, E. M., 1943. Vitamin A-estimation. Nature, London 151: 535-536.

(4155) Hume, E. M., and H. A. Krebs, 1949. Vitamin A requirement of human adults: experimental study of vitamin A deprivation in man. British Information Services, 30 Rockefeller Plaza, New York 20, N. Y.

(4156) Hume, E. M., 1951. Vitamin A-standardization and requirement. Brit. J. Nutrition. 5:104-113.

(4157) Hunderfund, R. C., 1965. Investigations into the effects of vitamin A glycerol, glucose and aeration on the growth of the mycobacteria. Diss. Abstr. 25(12 Pt. 1): 6892-6893.

(4158) Hungerford, C. R., 1964. Vitamin A and productivity in Gambel's quail. Jour. Wildl. Mgmt. 28(1): 141-147.

(4159) Hunt, T. K.; et al., 1969. Effect of vitamin A on reversing the inhibitory effect of cortisone on healing of open wounds in animals and man. Ann. Surg. 170: 633-641.

(4160) Hunter, O. B., Jr., 1947. Chronic hepatitis. Trans. Am. Therap. Soc. 48: 36-40.

(4161) Hunter, R. F., 1950. Carotenoids and vitamin A. Research (London) 3: 453-461.

(4162) Hunter, R., and H. Pinkus., 1961. The effect of oral vitamin A on the number of keratin cells of human epidermis. Jour. Invest. Dermatol. 37(6): 459-460.

*(4163) Hurt, H. D.; et al., 1967. Rates of formation and absorption of cerebrospinal fluid in chronic bovine hypervitaminosis A. J. Dairy Sci. 50: 1941-1947.

(4164) Huszak, I., and T. Gereb., 1948. Vitamin A and carotene contents of blood serum in various nervous disorders. Intern. Z. Vitaminforsch. 19: 330-335.

(4165) Hutak, D., and C. Perlin, 1966. Nutritional status of soldiers (in Czechoslovakia). The retinol and carotene blood levels. Cesk. Gastroenterol. Vyziva 20(1): 47-51.

(4166) Hutsebaut, 1954. Development of generalized congenital ichthyosis under influence of vitamin A in aqueous solution. Arch. Belges Dermat. et Syph. 10: 226-228.

(4167) Huzita, Y., 1938. Uber die Wirkung des Vitamins A auf Wachstum und Radio-sensibilitat des malignen Tumors. I. Die Wirkung eines Vitamin-A-Mangels auf das Wachstum des malignen Tumors. Einflu eines ma igen Hungerzustandes auf das Wachstum des malignen Tumors. Japan. J. Obstetrics Gynecol. 21: 370-384.

(4168) Huzita, Y., 1939. Vitamin A-experimental study of effect on growth and radio-sensitivity of malignant tumor (albino-rat sarcoma). Jap. J. Obst. & Gynec. 21: 370-384.

(4169) Huzita, A., and I. Numata., 1940. Determination of vitamin C. Care in using the Duboscq colorimeter and removal of protein. Tokyo Izisinsi (Ijishinshi) No. 3182.

(4170) Huzita, A., and S. Tosimasa., 1941. Determination of vitamin A. I. Colorimetric determination according to Carr and Price. Biochem. Z. 308: 334-343.

(4171) Hvidsten, H.; et al., 1952. Effects of feeding on the oxidized flavor in milk. I. Effects of cod-liver oil and herring meal. Meieriposten 41: 145-151, 170-173, 186-190.

(4172) Hvidsten, H., and M. Husby., 1955. Feeding experiments in pigs with herring meal from nitrite-preserved herring. Fiskeridirektorat. Skrifter, Ser. Teknol. Undersok. 3(4): 47-64.

(4173) Iacono, P., and S. M. Weisberg., 1962. Stabilisiertes Vitamin-Praparat, bes. fur Futterzwecke. (A.P. 2 933 392 vom 15/4. 1953, ausg. 19/4. 1960.)

(4174) Idris, O. F., and J. R. Haag. 1965. Copper intake, meat flavor, and liver vitamin A. Proc. Ann. Meeting Western Sect., Am. Soc. Animal Sci. 16(22): 5 pp.

(4175) Ierano, A., and E. M. Coriandoli. 1967. Effects of supplemental vitamins A and E and pantothenic acid on testicular coenzyme A. Boll. Soc. Ital. Biol. Sper. 43(17): 1025-1028.

(4176) Igarashi, E. 1930. Biological action of unknown unsaponifiable substance; relation to avitaminosis A. Sei-I-Kwai Med. J. 49: 16-17.

(4177) Ignatius, K. 1947. Animal experiments on the healing of fractures in vitamin deficiency and undernutrition. Acta. Soc. Med. Fennicae (Duodecim). 23: 28-170.

(4178) Ignatova, A. V., and D. I. Prokop'ev. 1966. Vitamin A and carotene in patients with lung tuberculosis with side-effects from antibacterial therapy. Probl. Tuberk. 44(9): 36-41.

(4179) Iguchi, K. ; et al. 1937. Carotene content and vitamin A activity of Holstein and Guernsey butter fat. Proc. 11th World's Dairy Congr., Berlin. 3: 217-219.

(4180) Iida, T. 1967. The role of vitamin A in the female reproductive function. II. A comparison of the uptake of the C-labeled vitamin A in the several organs of female rats. Bitamin. 35(4): 272-278.

(4181) Iida, T. 1967. The role of vitamin A in the female reproductive function. I. Vitamin A contents in serum of pregnant women. Bitamin. 35(4): 263-271.

(4182) Ikegaki, I. 1937. Carotene and vitamin A content of blood of leprous patients. Ztschr. f. Vitaminforsch. 6: 206-209.

(4183) Ikegaki, I. 1938. Significance of the liver in overdosage with vitamin A and carotene. Z. Vitaminforsch. 7: 113-118.

(4184) Ikegaki, I. 1939. Significance of the liver in overdosage with vitamin A and carotene. II. Z. Vitaminforsch. 9: 1-8.

(4185) Imachi, K. ; et al. 1937. General symptom complex resembling beriberi in vitamin A-deficient patients with xerophthalmia and idiopathic hemeralopia. Jahresb. d. Kurashiki-Zentralhosp. 12: 72-73.

(4186) Imachi, K., and T. Maruo. 1938. Experimental study of influence of A avitaminosis on induced lesions of optic nerve, in relation to pathogenesis of chronic retrobulbar neuritis (so-called beriberi amblyopia). Jahresb. d. Kurashiki-Zentralhosp. 13: 56-57.

(4187) Imachi, K., and T. Maruo. 1938. Experimental study of influence of A and B avitaminoses on induced lesions of retina and optic nerve, in relation to pathogenesis of chronic retrobulbar neuritis (so-called beriberi amblyopia.) Jahresb. d. Kurashiki-Zentralhosp. 13: 77-78.

(4188) Imamura, M. ; et al. 1965. Milk and trace components in margarine. III. Vitamin A and β-carotene. Shokuhin Eiseigaku Zasshi. 6(6): 518-530.

(4189) Imamura, M. ; et al. 1967. Milk and trace components in margarine. VIII. Effect of milk constituents upon stability of vitamin A and β-carotene. Shokuhin Eiseigaku Zasshi. 8(3): 227-232.

(4190) Imamura, M. ; et al. 1967. Milk components and trace substances in margarine. IX. Effect of moisture and raw material oils upon the stability of vitamin A and β-carotene. Shokuhin Eiseigaru Zasshi. 8(4): 311-317.

(4191) Imamura, S. 1944. Fur-seal oil and its vitamins. J. Agr. Chem. Soc. Japan. 20: 190-192.

(4192) Imanishi, F. 1961. Histopathologische Untersuchung der Schadigung von Ratten bei Vitamin-A-Hypervitaminose. Vitamins (Kyoto). 22: 313-322.

(4193) Imbesi, A. 1957. Influence of tocopherol on the vitamin A absorption by lymphatics. Arch. Ital. Sci. Farmacol. 7: 58-65.

(4194) Imbesi, A. 1958. Vitamin A absorption through the blood and lymph. Atti. Accad. Peloritana Pericolanti, Classe Sci. Med.-Biol. 56: 203-223.

(4195) Imbesi, A. 1958/59. Einflu von Aureomycin auf die Resorption von Vitamin A fur die Lymphbahn. Atti. Soc. Peloritana Sci. Fisiche, Mat. Natur. 5: 267-277.

(4196) Imura, T., and T. Azuma. 1927. The effect of tar on albino rats fed a vitamin A-free diet. Trans. Japanese Path. Soc. 17: 491-495.

(4197) Inagaki, C., and S. Morimoto. 1956. Vitamin A decomposing factors on "miso." Vitamins (Kyoto). 11: 290-292.

(4198) Inagaki, C., and K. Koyata. 1964. Miso-milk soup. Nippon Shokuhin Kogyo Gakkaishi. 11(6): 247-248.

(4199) Indian Patent. 49,590, 1955. Fruit juice products.

(4200) Indian Patent. 62 987 vom 30/1. 1958, ausg. 9/6. 1960. Farben von Margarine unter gleichzeitiger Erhohung des Vitamin-A-Geh. durch Zusatz von ca. 4 mg Vitamin-A-Aldehydazin zu 1 pound.

(4201) Indian Patent. 62989 vom 30/1. 1958, ausg. 28/7. 1960. Stabilisieren von Vitamin A enthaltendem Material.

(4202) Indian Patent. 62988 vom 30/1. 1958, ausg. 11/1. 1960.) Stabilisieren von Vitamin A enthaltendem Material durch Zusatz von 2.6-Di-tert.-butyl-4-methylphenol u. evtl. Tocopherol.

(4203) Infant'eva, N. S. 1952. Adaptometric studies in tuberculo-allergic eye inflammations. Vestnik Oftalmol. 31(3): 24-27.

(4204) Ingle, D. J.; et al. 1953. Failure of certain vitamins to effect the survival of the eviscerate rat. Proc. Soc. Exptl. Biol. Med. 83: 602-603.

(4205) Ingiulla, W. 1945. Vitamin A-metabolism during pregnancy and puerperium. Riv. Ital. di. Ginec. 28: 192-204.

(4206) Ingraham, M. A., and C. A. Baumann. 1934. The relation of microorganisms to carotenoids and vitamin A. I. The occurrence of carotene in bacteria. J. Bact. 28: 31-40.

(4207) Intengan, C. L.; et al. 1953. A biochemical evaluation of the UNICEF. School lunch program given to malnourished school children of San Andres Elementary School, Manila. Acta. Med. Philippina. 9: 181-196.

(4208) Ippen, H. 1970. Drug induced alopecia. Deutsch. Med. Wschr. 95: 1411-1416.

(4209) Irving, J. T., and M. B. Richards. 1937. The early lesions of vitamin A deficiency. J. Physiol. 89: 2-3P.

(4210) Irving, J. T., and M. B. Richards. 1938. Early lesions of vitamin A deficiency. J. Physiol. 94: 307-321.

(4211) Irving, J. T., and M. B. Richards. 1939. Influence of age on the requirement of vitamin A. Nature. 144: 908-909.

(4212) Irving, J. T., and M. B. Richards. 1940. The influence of graded doses of vitamin A upon the pathological changes in the central nervous system of the rat, with suggestions for a prophylactic assay of the vitamin. Biochem. J. 34: 198-201.

*(4213) Irving, J. T. 1948. Changes in the incisor teeth and incisal alveolar bone of rats in hypervitaminosis A and avitaminosis A. Nature (London). 162(4114): 377.

(4214) Irving, J. T. 1949. The effects of avitaminosis and hyper-vitaminosis A upon the incisor teeth and incisal alveolar bone of rats. Jour. Physiol. 108(1): 92-101.

(4215) Irving, J. T. ; et al. 1952. Symptoms of vitamin A and E deficiencies in incisor of rat fed sodium sulfite. J. Dent. Res. 31: 815-824.

(4216) Irving, J. T., and M. B. Richards. 1954. Sensitivity of different tissues to vitamin A deficiency and to the prophylactic action of the vitamin. S. African J. Med. Sci. 19: 108.

(4217) Irving, J. T. 1956. Early histological changes in bone formation in vitamin A deficiency. Med. Klin. (Munich). 51: 690-693.

(4218) Irving, J. T., and M. B. Richards. 1956. Protective action on various tissues in avitaminotic rat; sensitivity of these tissues to vitamin A deficiency. Brit. J. Nutrition. 10: 7-14.

(4219) Irving, J. T. 1957. A comparison of the influence of hormones, vitamins and other dietary factors upon the formation of bone, dentine and enamel. Vitamins and Hormones. 15: 291-323.

(4220) Irving, J. T. 1958. The actions of a-tocopherol and protein upon the incisor tooth of the rat, and the influence of vitamin A upon a-tocopherol activity. Brit. Jour. Nutrition. 12(2): 196-202.

(4221) Irwanetz, O. M. 1959. Die Dynamik der Anreicherung von Carotin und Vitamin A in der Milch im Zusammenhang mit der Carotinzunahme im Futter der Kuhe. Ber. Ukrain. Landwirtsch. Wiss. 2(3): 47-48.

(4222) Irwin, M. H. ; et al. 1930. Applications of statistical method to the data of vitamin feeding experiments. Jour. Biol. Chem. 88(2): 449-470.

(4223) Irwin, M. H. 1932. Studies in vitamin A technic. Iowa State Coll. J. Sci. 6: 451-454.

(4224) Irwin, M. H. ; et al. 1936. Influence of vitamins A, B or D, anemia or fasting on the rate of fat absorption in the rat. J. Nutrition. 12: 357-364.

(4225) Isaacs, B. L. ; et al. 1938. Vitamin A deficiency and dark adaption. J. Am. Med. Assoc. 111: 777-780.

(4226) Isaacs, B. L. ; et al. 1940. Biophotometer and adaptometer (Hecht) studies on normal adults and on persons in whom an attempt was made to produce deficiency. Arch. Ophth. 24: 698-721.

(4227) Isham, P. D., and C. R. Fellers. 1933. Effect of manufacturing and preserving processes on the vitamins of cranberries. Mass. Agr. Exptl. Sta., Bull. 296: 2-19.

(4228) Ishida, I. 1934. Influence of carotene and gallosterin (vitamin A-choleic acid preparation) on calcium and phosphorus content of blood. J. Biochem. 20: 5-16.

(4229) Ishii, R. 1951. The carotene production by microorganisms. III. Carotene production by red yeast. J. Fermentation Technol. (Japan). 29: 334-340.

(4230) Ishii, H. ; et al. 1962. Effects of the concurrent administration of chondroitin sulfate with cortisone, vitamin A, or noise stimulation on the fetal development of the mouse. Gunma J. Med. Sci. 11(4): 259-264.

(4231) Ishikawa, S. ; et al. 1949. Studies on vitamin-A, -D and related substances by molecular distillation. III. Analytical distillation of vitamin A, in the whale liver oil. J. Chem. Soc. Japan, Ind. Chem. Sect. 52: 22-23.

(4232) Ishikawa, S., and G. Katsui. 1964. Separation and detection of antioxidants in vitamin A oil or in vegetable oil by thin-layer chromatography. Bitamin. 30(3): 203-207.

(4246) Isliker, H. ; et al. 1960. The influence of vitamin A, -carotene, -apo-8'-carotenal(C-30) and lycopene on serum properdin in the rat). Hoppe. Sevier. Z. Physiol. Chem. 320: 126-133.

(4247) Ismailov, M. N. 1964. Effects produced by qualitatively differing fats in the diet on some biochemical indexes of the blood serum in laboratory animals. Vopr. Pitaniya. 23(6): 62-67.

(4248) Ismailov, M. N. 1965. Preservation of cottonseed oil enriched with vitamin A and phosphatides during prolonged preservation and in the preparation of some dishes. Gig. Sanit. 30: 105-107.

*(4249) Israels, L. G. ; et al. 1962. The coagulation defect in hypervitaminosis A in rats. Thromb. Diath. Haemorrhag. 7: 159-168.

(4250) Ito, R. 1959. Vitamin A metabolism. I. Behavior of intravenously administered vitamin A in the liver of healthy dogs. Bitamin (Kyoto). 18(1): 92-95.

(4251) Ito, T. 1966. Effects of vitamin A on the hypophysis, adrenal cortex, ovarium, and uterus. I. Vitamin A deficiency. Nippon. Funin. Gakkai, Zasshi. 11(2): 93-109.

(4252) Ito, T. 1966. Effects of vitamin A on the hypophysis, adrenal cortex, ovarium, and uterus. II. Vitamin A administration. Nippon. Funin. Gakkai. Zasshi. 11(2): 110-122.

(4253) Ittyerah, T. R. ; et al. 1967. Urinary excretion of lysosomal arylsulfatases in kwashiorkor. Clin. Chim. Acta. 17(3): 405-414.

(4254) Ivanov, Ks. ; et al. 1962. Histochemical studies of vitamin A deficiency in poultry. I. Changes in the activity of alkaline phosphatases in esophagus tissue. Mezhdun. Konf. Vitamin., Dokl. Suobsht., Sofia. 1960, 269-278.

(4255) Ivanov, Ks. ; et al. 1962. Influence of vitamin A on blood changes in fowl treated with massive doses of estrogen. Izv. Inst. po Sravnitelna Patol. Domashnite. Zhivotni, Bulgar. Akad. Nauk. 9: 163-173.

(4256) Ivanov, Ks. ; et al. 1964. Changes in the activity of the alkaline and acid phosphomonoesterases in hypovitaminosis A in chicks. Izv. Inst. Stravnitelna Patol. Zhivotn., Bulgar. Akad. Nauk. 10: 113-120.

(4233) Ishikawa, S., and G. Katsui. 1966. Separation and detection of antioxidants in vitamin A oil or in vegetable oil by thin layer chromatography. J. Vitaminol (Osaka). 12(2): 112-116.

(4234) Ishiwara, F., and K. Saga. 1939. Vitamin A-inhibiting action on artificial production of cancer. Gann. 33: 240-241.

(4235) Ishiwara, F., and K. Saga. 1940. Vitamin A-inhibiting action on production of experimental cancer. Gann. 34: 194-197.

(4236) Ishizaka, O. 1952. Water-soluble vitamin A-like substance. Japan. 5150.

(4237) Ishizaka, O., and M. Hori. 1954. Separation of vitamins A and D from the unsaponifiable substance of fish liver oil. Japan. 2650.

(4238) Ishizaka, O., and M. Hori. 1955. Concentration of vitamin A fish-liver oil. Japan. 1384.

(4239) Ishizaka, O. 1962. On the water soluble vitamin A active substances. Boll. Chimicofarm. 101: 657-665.

(4240) Ishizaka, O. 1964. The biological chemistry of vitamin A. Nagoya Shiritsu Daigaku Yakugakubu Kenkyu Nempo. 12: 1-12.

(4241) Isler, O. 1950. The chemistry of vitamin A. Chimia. (Switz.) 4: 103-118.

(4242) Isler, O. 1951. Die Saulenchromatographie und ihre Anwendung auf die fettloslichen Vitamine. Chimia. (Zurich). 5: 249-256.

(4243) Isler, O. 1956. Vitamin A and carotinoids. Angew. Chem. 68: 547-553.

(4244) Isler, O. ; et al. 1960. Ung. P. 149 680 vom 15/9. Stabilisierung von Vitamin A oder dessen funktioneller Derivate.

(4245) Isler, O. ; et al. 1965. On vitamin A. Deutsch. Med. J. 16: 576-582.

(4257) Ivanov, N. N., and M. A. Smirnova. 1934. The vitamin A content of carrots. Bull. Applied Botany, Genetics Plant Breeding (U. S. S. R.), Suppl. 67: 53-64.

(4258) Ivanov, P. P. 1969. The efficacity of vitamin A and grass meal concentrate in vitamin A deficiency. Veterinariia. 46: 64-66.

(4259) Ivemark, B. ; et al. 1970. Modification of pulmonary surfactant in the rat by vitamin A, pilocarpine and paraquat. J. Pathol. 101: P13.

(4260) Ivstam, B. 1960. Vitamin A as a means of reducing industrial deafness. Acta. Otolaryng. (Stockh). 52: 321-325.

(4261) Iwanowska, J., and H. Kakol. 1950. A fast method of determining vitamin A. Roczniki Panstwowego Zakladu Hig. 1: 291-300.

(4262) Iwanowska, J., and K. Paczek. 1967. Effect of unsaturated fatty acids on vitamin A. Acta. Physiol. Pol. 18(6): 963-972.

(4263) Iwoa, H. ; et al. 1959. The loss of vitamin A during preparation of bread made from enriched flour. Ann. Rept. Natl. Inst. Nutrition (Tokyo). 1959: 76.

(4264) Iwoa, H. ; et al. 1959. A change of the vitamin A concentration enriched to fish sausage during storage in summer. Ann. Rept. Natl. Inst. Nutrition (Tokyo). 1959: 77.

(4265) Iyengar, N. K., and H. K. Biswas. 1949. Determination of vitamin A with the Lumetron photoelectric colorimeter. Indian J. Med. Research. 37: 311-318.

(4266) Izar, G. 1957. Honig und Weiselfuttersaft in ihrer therapeutischen Anwendung. Minerva Med. (Torino). 48: 2323-2331.

(4267) Jackman, J. B. W., and H. C. Gibbs. 1968. Studies on the interrelationships between vitamin A intake and Dictyocaulus viviparus infection in calves. Can. Vet. J. 9(9): 199-209.

(4268) Jackson, B., and V. E. Kinsey. 1946. Relation between maternal vitamin A intake, blood level and ocular abnormalities in offspring of rat. Am. J. Ophth. 29: 1234-1242.

(4269) Jackson, C. M. 1925. Spontan-Nephritis und kompensatorische Nierenhypertrophie bei Albinoratten nach Vitamin-A-armer Ernahrung. Proc. of the Soc. f. Exp. Biol. a. Med. 22: 410-413.

(4270) Jackson, R. W. 1931. Effect of mineral oil administration upon the nutritional economy of fat-soluble vitamins. I. Studies with the vitamin A of butter fat. J. Nutrition. 4: 171-184.

(4271) Jackson, R. W. 1934. Effect of mineral-oil administration upon the nutritional economy of fat-soluble vitamins. II. Studies with the vitamin A factor of yellow-corn. J. Nutrition. 7: 607-617.

(4272) Jackson, S. F., and H. B. Fell. 1963. Epidermal fine structure in embryonic chicken skin during atypical differentiation induced by vitamin A in culture. Develop. Biol. 7: 394-419.

(4273) Jacobi, J., and H. Pomp. 1938. Treatment of Hyperthyroidism with vitamins A and B . Klin. Wochschr. 17: 873-875.

(4274) Jacobs, A. L. ; et al. 1954. Vitamin A in rheumatic fever. J. Clin. Nutrition. 2: 155-161.

(4275) Jacobs, R. M. 1967. Effect of vitamin A on palate hydration in mouse embryos. J. Dent. Res. 46(1): 310.

(4276) Jacobsen, E. 1944. The role of vitamins in tissue metabolism. Dansk. Tids. Farm. 18: 112-132.

(4277) Jacobsen, J. 1960. Cerebrovascular accidents. The rationale of the treatment of arteriosclerotic lesions with the solution of benzyl cinnamate (Jacobson's solution) with vitamin A. Harlem Hosp. Bull. 1: 103-109.

(4278) Jacobsen, N. L. ; et al. 1950. Rate of absorption of carotene and of vitamin A from the alimentary tract of dairy calves. I. Effect of method of administration. J. Dairy Sci. 33: 645-656.

(4279) Jacobsen, N. L. ; et al. 1954. The effect of method of administration on the absorption and storage of vitamin A by dairy calves. J. Nutrition. 54: 143-153.

(4280) Jacobsen, W. C. ; et al. 1949. Effects of vitamin A and carotene intake on depletion time of young dairy calves. J. Dairy Sci. 32: 418-428.

(4281) Jaffe, W. G., and N. Czyhrinciw. 1950. Neglected wealth - the mango. Ser. Pubs. Inst. Nacl. Nutrition (Caracas, Venezuela), Cuaderno. 4: 10pp.

(4282) Jagannathan, S. N., and V. N. Patwardhan. 1960. Nahrungseiwei beim Vitamin-A-Stoffwechsel. 1. Mitt. Einflu des Nahrungseiwei spiegels auf die Verwertung von oral verfluttertem praformierten Vitamin A und -Carotin bei Ratten. Indian J. Med. Res. 48: 775-784.

(4283) Jagannathan, S. N., and V. N. Patwardhan. 1960. Nahrungseiwei beim Vitamin-A-Stoffwechsel. 2. Mitt. Wirkung des Nahrungseiwei spiegels auf die Entleerung der Vitamin-A-Depots bei der Ratte. Indian J. Med. Res. 48: 785-789.

(4284) Jaki, J. 1938. Vitamin A and the formation of urinary concretions. Z. Urol. 32: 750-756.

(4285) Jakovljevic, I. M. 1958. A new spectrophotometric method for the determination of vitamin A. I. Measuring the red color. Pharm. Weekblad. 93: 585-593.

(4286) Jakovljevic, I. M. 1960. A new spectrophotometric method for the determination of vitamin A. II. Measurement of the blue color. Pharm. Weekblad. 95: 549-560.

(4287) Jakowlew, N. N., and O. P. Shabotinskaja. 1955. Einflu der Anwendung eines Vitaminkomplexes (A, B , B , PP, C und D) auf die Arbeitsfahigkeit und den Kohlenhydratstoff-wechsel bei Muskeltatigkeit. Fragen d. Ernahr. 14(3): 9-15.

(4288) James, W. H., and I. M. ElGindi. 1953. Effect of strenuous physical activity on blood vitamin A and carotene in young men. Science. 118: 629-630.

(4289) James, W. H., and I. M. ElGindi. 1953. The utilization of carotene. I. As affected by certain proteins in the diet of growing albino rats. Jour. Nutrition. 51(1): 97-108.

(4290) Jampoler, I. 1951. Vitamin A in margarine. Roczniki Panstwowego Zakladu Hig. 2: 190-225.

(4291) Jankala, E. O., and P. Virtama. 1962. Giant hypertrophic gastritis and vitamin A. Ann. Med. Intern. Fenn. 51: 215-218.

(4292) Jankowska, H.; et al. 1959. On the problem of vitamin A deficiency in epidemic hepatitis in infants. Pol. Tyg. Lek. 14: 2017-2021.

(4293) Janoff, A., and R. T. McCluskey. 1962. Effect of excess vitamin A on acid phosphatase content of guinea pig peritoneal leucocytes. Proc. Soc. Exptl. Biol. Med. 110: 586-589.

(4294) Janoff, A., and G. Kaley. 1964. Lysosomes in tolerance, shock, and local injury induced by endotoxin. Bacterial Endotoxins, Proc. Symp., Rutgers State Univ., New Brunswick, N.J. 1963: 631-647.

(4295) Jansen, B. C. P., and W. F. Donath. 1924. The vitamin A content of different Indian foodstuffs and the value of the proteins of the latter as a supplement to the proteins of rice. Meded. Bergerl. Geneesk. Dienst. Nederland, Indie. 1924: 46-98; Exptl. Sta. Record. 52: 64-65.

(4296) Jansen, B. C. P., and W. F. Donath. 1924. A-Vitamingehalt indischer Nahrmittel und der Wert der Eiwei substanzen derselben als Zusatz zu den Reiseiwei substanzen. Mededeel. Burgerl. Geneesk. Dienst in Nederlandsch Ind. 1: 48-102; Ber. ges. Physiol. 27: 326.

(4297) Jansen, B. C. P., and W. F. Donath. 1928. The amount of vitamin A in different varieties of Batatas. Mededeel. Dienst Volksgezondheid Nederland. Indie. 17: 120-125.

(4298) Jansen, B. C. P., and W. F. Donath. 1928. Vitamin A-amount in Indian fruits. Mededeel. v. d. Dienst d. Volksgezondh. in Nederl. Indie. 17: 126-137.

(4299) Jansen, B. C. P., and W. F. Donath. 1928. Der Nahrwert von Mais und Maispraparaten in Java. Mededeelingen van den Dienst der Volksgezondheid in Ned. -Indie. 17:

(4300) Jansen, B. C. P., and W. F. Donath. 1928. Vitamin A-Gehalt indischer Fruchte. Mededeelingen van den Dienst der Volksgezondheid in Ned. -Indie. 17:

(4301) Jansen, B. C. P., and W. F. Donath. 1928. The nutritive value of maize and its various preparations in Java. Mededeel. Dienst der Volksgezondheid, Nederlandsch-Indie (Foreign edition). 17(1): 92-119.

(4302) Jansen, B. C. P., and W. F. Donath. 1928. The amount of vitamin-A in different varieties of batata. Mededeel. Dienst der Volksgezondheid Nederlandsch-Indie (Foreign edition). 17(1): 120-125.

(4303) Jansz, A. ; et al. 1967. The effect of vitamin A on experimental immune thyroiditis. Int. Arch. Allerg. 31: 69-77.

(4304) Jarrett, A., and R. I. C. Spearman. 1964. Histochemistry of the skin: Psoriasis. (A monograph on normal and parakeratotic epidermal keratinization with special reference to psoriasis and its treatment.) xi= 115p. Illus. D. Van Nostrand Co.: Princeton, N. J.

* (4305) Jarrett, A. ; et al. 1970. Vitamin A and the skin. Brit. J. Derm. 82: 197-199.

(4306) Javillier, M.; et al. 1924. Versuche zur Identifzierung des Faktors A. Der Faktor A und das Phytol. C. r. d. l'Acad. des Sciences. 179: 998-1000.

(4307) Javillier, M. ; et al. 1924. Lebertran und sein Gehalt an Faktor A. Bull. Sciences Pharmacol. 31: 442-457.

(4308) Javillier, M. ; et al. 1925. Uber die physiologische Bestimmung des A-Faktors. Bull. Soc. Chim. Biol. 7: 831-841.

(4309) Javillier, M., and (Miss) L. Emerique. 1929. Vitamin A in crude and refined olive oils. Bull. Soc. Hyg. Aliment. 17: 420-422.

(4310) Javillier, M. ; et al. 1929. Chemical composition of tissues in avitaminosis A: phosphorus, lipoid extract, cholesterol. Compt. Rend. Acad. Sci. 188: 580-582.

(4311) Javillier, M. 1930. Carotin und das Wachstum der Tiere. Bull. Soc. Chim. France. (4) 47: 489-508.

(4312) Javillier, M., and L. Emerique. 1930. Carotin has physiologic properties of vitamin A. Compt. Rend. Acad. d. Sci. 190: 655-657.

(4313) Javillier, M., and L. Emerique. 1931. Bemerkungen bezuglich der physiologischen Bestimmung der Vitamin-A-Wirkung. Bull. Soc. Chim. Biol. 13: 771-780.

(4314) Javillier, M. M. 1932. Les vitamines au point de vue chimique. Bull. Soc. Sci. Hyg. Alimentaire. 20(7/8): 305-344.

(4315) Javillier, M. 1934. The chemical nature of the fat-soluble vitamin of growthphytol, carotene, vitamin A. Can. Med. Assoc. J. 30: 473-478.

(4316) Javillier, M. 1939. Vitamin A (axerophthol) and its provitamins. Exposes. Ann. Biochim. Med. 1: 106-120.

(4317) Javillier, M., 1940. Milk and the resupplying of man with vitamins. Compt. Rend. Acad. Agr. France 26: 391-399.

(4318) Javillier, M., 1941. Magnitude of human vitamin requirements. Paris Med. 31: 245-258.

(4319) Javillier, M, and L. Emerique-Blum. 1941. Experimental rickets in presence of an excess of vitamin A. Compt. Rend. 212: 289-292.

(4320) Jeanneret, H., 1942. Association of the lesions of aurantiasis palmarum, scanthosis nigricans and verruciform epitermodysplasia in a case of gastric neoplasm. Schweiz. Med. Wochschr. 20-21.

(4321) Jeanneret, R., 1937. Vitamins in dentistry. Z. Vitaminforsch. 6: 250-264.

(4322) Jeans, P. C., and Z. Zentmire., 1934. Vitamin A-clinical method for determining moderate degrees of deficiency. J. A. M. A. 102: 892-895.

(4323) Jeans, P. C., and Z. Zentmire., 1936. Vitamin A-prevalence of deficiency among Iowa children (tested for dark adaptation). J.A.M.A. 106: 996-997.

(4324) Jeans, P. C.; et al., 1937. Vitamin A-dark adaptation and vitamin; new photometric technic. J.A.M.A. 108: 451-458.

(4325) Jeans, P. C., 1938. Neue Gesichtspunkte uber Kinderernahrung. Milk Plant Monthly 27(9): 42-45.

(4326) Jeffrey, F. P., 1938. Egg quality as related to the individual bird. New Jersey Agr. Exptl. Sta., Hints to Poultrymen 25 (6): 1-4.

(4327) Jefremow, W. W., 1955. Zur Frage der Untersuchung des Bedarfs des Menschen an Vitaminen. Fragen d. Ernahr. 14(2):8-13.

(4328) Jefremow, W. W.; et al., 1958. Versuche zur optimalen Vitaminversorgung von Arbeitern der Eisenhuttenindustrie. Ernahrungsforschung 3 237-249.

(4329) Jeghers, H., 1937. The degree of prevalence of vitamin A deficiency in adults. With a note on its experimental production in human beings. J. Am. Med. Assoc. 109: 756-62.

(4330) Jeghers, H., 1937. Night blindness as a criterion of vitamin-A deficiency. Review of the literature with preliminary observations of the degree and prevalence of vitamin A deficiency among adults in both health and disease. Ann. Internal Med. 10: 1304-1334.

(4331) Jeghers, H., 1937. Vitamin A-night blindness due to deficiency: consideration of its importance in traffic problems. New England J. Med. 216: 51-56.

(4332) Jeghers, H., 1943. Skin changes of nutritional origin. Vitamin A deficiency. New England Jour. Med. 228: 678.

(4333) Jegiasarow, G. M., 1960. Der Einflu geringer Dosen an Gammastrahlen auf die Haltbarkeit der Vitamine in Lebensmitteln. Fragen der Ernahr. 19(4) 54-58.

(4334) Jemelina, N. T., 1960. Wege zur Verbesserung der Vitamin-A-Ernahrung von Milchvieh. Tierzucht UdSSR 22(12): 67-70.

(4335) Jemelina, N. T., 1962. Assimilation von Vitamin A., Vestnik Sel'skochoz. Nauki 7(10): 60-61.

(4336) Jennekens, F. G.; et al., 1966. Hypervitaminosis A. Presse Med. 74: 2925-2928.

(4337) Jenness, R., and L. S. Palmer., 1945. The vitamin A potency of creamery butter produced in Minnesota. Jour. Dairy Sci. 28(6) 473-494.

(4338) Jensen, H. B., and T. K. With., 1939. Vitamin A and carotenoids in the livers of mammals, birds, reptiles and man, with particular regard to the intensity of the ultraviolet absorption and the Carr-Price reaction of vitamin A. Biochem. J. 33: 1771-1786.

(4339) Jensen, H. B., and K. Svanhof., 1940. Vitamin A content of Danish foodstuffs. IV. Liverpaste as a vitamin A source. Z. Untersuch. Lebensm. 79: 346-348.

(4340) Jensen, H. B., and K. Svanhof., 1940. Vitamin A-content of Danish food products: liver paste as source. Nord. Hyg. Tidskr. 21: 57-62.

(4341) Jensen, J. L.; et al., 1943. Vitamin A-biologic activity of Vitamin $A_2$. J. Biol. Chem. 149: 473-477.

(4342) Jensen, J. L., 1946. The effect of tocopherols in preventing gastric ulcers in rats. Science 103(2680): 586-587.

(4343) Jensen, L. A., 1965. Vitamin A requirement of breeding turkeys. Poultry Sci. 44(6): 1609-1610.

(4344) Jensen, et al., 1946. Tests indicate liver abscesses not related to lack of vitamin A. Colorado A. and M. News 1(1): 5.

(4345) Jespersen, J., 1941. Experiments on the elucidation of the vitamin action of yellow corn, alfalfa meal and silage as well as of concentrated carotene and vitamin A preparations. Beretn Forsegslab. (197): 7-32, 57-9, 65-143. Chem. Zntr. 1: 1320-1321.

(4346) Jethi, R. K.; et al., 1969. Effect of protein intake on the utilization of body stores of vitamin A. J. Nutr. Diet. 6(2): 87-90.

*(4347) Jewell, H. A.; et al., 1957. Action of vitamin A on the skin following intracutaneous injection. Proc. Soc. Exptl. Biol. and Med. 96(1): 162-165.

(4348) Jewett, H. J.; et al., 1943. Does vitamin A deficiency exist in clinical urolithiasis? A clinical and pathologic study of ninety-eight cases. Jour. Amer. Med. Assoc. 121(8): 566-569.

(4349) Joachimoglu, G., and K. Logara., 1933. Chemical differences between male and female. Praktika (Akad. Athenon) 8: 16-19.

(4350) Joachimoglu, G., and G. Logaros., 1936. Vitamin content of Greek foodstuffs. I. Olives and olive oil. Praktika Akad. Athenon 11: 186-196.

(4351) Joachimoglu, G., und E. Sotiriadou., 1938. Die Vitamine der Milch von Athen. Praktika 13: 667-674.

(4352) Joel, C. A., 1943. Vitamin A-effect of estrogens on anterior pituitary lobe of avitaminotic rats. Monatschr. f. Geburtsh. u. Gynak. 116: 277-287.

(4353) Joffe, B., 1961. Vitamin A-Hypervitaminosis A. G. P. 24:89.

(4354) Johannessen, S.; et al., 1969. Transport of retinol in human plasma. FEBS(Fed. Eur. Biochem. Soc.)Lett. 2(3): 146-148.

(4355) John, I., 1931. The sedimentation velocity of blood cells in eye diseases caused by vitamin A deficiency. Amer. Jour. Opthalmol. 14(7): 590-594.

(4356) John, I., 1931. The disturbances of sensibility of the cornea and conjunctiva in xerosis and keratomalacia of adults. With a contribution to the explanation of the genesis of these diseases. Arch. Ophthalmol. 5(3):374-391.

(4357) Jones, I. R.; et al., 1966. Effect of high-nitrate consumption on lactation and vitamin A nutrition of dairy cows. Dairy Sci. 49(5): 491-499.

(4358) John, K. V.; etal., 1965. Separation of vitamins A1 and A2 and allied compounds by thin-layer chromatography. J. Chromatogr. 18: 53-56.

(4359) John, K. V.; et al., 1966. Absorption, storage and distribution of 3-dehydrovitamin A in the rat. Biochem. J. 99(2): 312-316.

(4360) John, K. V.; et al., 1967. Metabolism and biological potency of retro-retinyl acetate in the rat. Biochem, J. 103:544-549.

(4361) John, K. V.; et al., 1967. Preparation, properties and metabolism of 5,6-monoepoxyretinoic acid. Biochem. J. 103: 539-543.

(4362) Johnson, B. C., 1952. The function of antibiotics in stimulation of growth., Congr. Intern. Biochim., Resumes Communs. 2 Congr., Paris, 104-105.

(4363) Johnson, B. C., and G. Wolf., 1960. The function of vitamin A in carbohydrate metabolism; its role in adrenocorticoid production. Vitamins Hormones (N. Y.) 18:457-483.

(4364) Johnson, B. L. , 1928. Acceleration of lipase activity by substances containing vitamin A. Iowa State Coll. Jour. Sci. 2(2): 145-153.

(4365) Johnson, D., 1942. Vitamin A versus carotene content of low-fat diets in obesity, cholecystitis and liver disease. J. Amer. Dietet. A. 18:725-727.

(4366) Johnson, E. L.; et al., 1948. The vitamin A requirements of young chickens. Poultry Sci. 27(3): 308-314.

*(4367) Johnson, J. E.; et al., 1963. Relationship of vitamin A and oral leukoplakia. Arch. Dermatol. 88(5): 607-612.

(4368) Johnson, M. L.., 1939. Vitamin A-effect of deficiency upon retina of rat. J. Exper. Zool. 81: 67-89.

(4369) Johnson, M. L., 1943. Vitamin A-degeneration and repair of rat retina in avitaminosis. Arch. Ophth. 29: 793-810.

(4370) Johnson, R. M., and C. A. Bauman., 1947. Studies on the role of the kidney in vitamin A metabolism. Federation Proc. 6(1): 265.

(4371) Johnson, R. M., and C. A. Baumann., 1947. Effect of thyroid on conversion of carotene into vitamin A., J. Biol. Chem. 171: 513-521.

(4372) Johnson, R. M., and C. A. Baumann., 1947. Storage and distribution of vitamin A in rats fed certain isomers of carotene. Arch. Biochem. 14: 361-367.

(4373) Johnson, R. M., and C. A. Baumann., 1948. The effect of α-tocopherol on the utilization of carotene by the rat. J. Biol. Chem. 175: 811-816.

(4374) Johnson, R. M., and C. A. Baumann., 1948. Vitamin A-storage in rats fed cryptoxanthine and certain other carotenoids with parallel data on absorbability. Arch. Biochem. 19:493-501.

(4375) Johnson, R. M., 1948. Relative significance of growth and metabolic rate upon the utilization of vitamin A by the rat. Jour. Nutrition 35(6): 703-715.

(4376) Johnson, R. M., and C. A. Baumann. 1949. Storage of vitamin A in rats fed cryptoxanthin and certain other carotenoids with parallel data on absorbability. Arch. Biochem. 19: 493-501.

(4377) Johnson, R. M.; et al., 1949. The vitamin A activity of certain carotenoids in the chick. Arch. Biochem. 22: 122-131.

(4378) Johnson, W. S., 1966. Vitamins A and C as factors affecting skin conditions in experimental piglets. Vet. Rec. 79:363-365.

(4379) Johnstone, D. E., and A. B. McCoord., 1958. Vitamin A absorption in allergic enteritis in infants and children. Ann. Allergy 16: 366-374.

(4380) Joint FAO-WHO Expert Group., 1967. Requirements of vitamin A, thiamine, riboflavine and niacin. WHO Techn. Rep. Ser. 362: 1-86.

(4381) Jolliffe, N., 1950. Resurvey of nutrition in Newfoundland in 1948. J. Amer. Dietetic Assoc. 26: 161-167.

(4382) Jolliffe, N., and Ta-Cheng Tung. 1956. Nutrition status survey of the civilian population of Formosa. Metabolism 5(3): 309-327.

(4383) Jolly, M., 1967. Vitamin A deficiency: a review. I. J. Oral Ther. 3: 364-386.

(4384) Jolly, M., 1967., Vitamin A deficiency; a review. II. J. Oral Ther. 3: 439-451.

(4385) Jones, D. B.; et al., 1925. Effect of long-continued storage at low temperature on vitamin-A content of eggs. Am. J. Physiol. 71: 265-273.

(4386) Jones, D. B., and J. C. Murphy., 1926. The vitamin content of oysters. Proc. Soc. Exptl. Biol. and Med. 23(7): 519-520.

(4387) Jones, D. B.; et al., 1928. Biological values of certain types of sea food. II. Vitamins in oysters (Ostrea Virginica). Indus. & Eng. Chem. 20(2): 205-210.

(4388) Jones, D. B.; et al., 1928. Biologische Werte gewisser Typen von Seenahrung. III. Vitamine in Muscheln. Ind. Engin. Chem. 20: 648-652.

(4389) Jones, D. B.; E. M. Nelson., 1930. Vitamingehalt von mit Athylen behandelten und unbehandelten Tomaten. Amer. Journ. Publ. Health 20: 387 bis 394.

(4390) Jones, E. P.; et al., 1953. Edible spreads of wide plastic range from vegetable oils and monoglycerides. J. Am. Oil Chemists' Soc. 30: 609-610.

(4391) Jones, E. P., and E. B. Lancaster., 1956. Edible spreads from vegetable oils. U. S. 2,754,213.

(4392) Jones, E. W.; et al., 1956. Liver biopsy for vitamin A studies in swine. Cornell Vet. 46(3): 360-366.

(4393) Jones, G. I., 1947. Ultraviolet absorption curves for vitamin A using tungsten and hydrogen discharge light sources. Comm. Fisheries Rev. 9(8): 22-26.

(4394) Jones, J. I. M., and R. T. Haines., 1943. Vitamin A-spectrophotometric determination in fish-liver oils. Analyst 68: 8-13.

(4395) Jones, I. R.; et al., 1926. The role of vitamin A in the nutrition of calves. Jour. Dairy Sci. 9(2): 119-139.

(4396) Jones, I. R.; et al., 1966. Effect of high-nitrate consumption on lactation and vitamin A nutrition of dairy cows. J. Dairy Sci. 49-491-499.

(4397) Jones, G. I., 1947. Ultraviolet absorption curves for vitamin A using tungsten and hydrogen discharge light sources. Com. Fisheries Rev. 9(8): 22-26.

(4398) Jones, J. H.; et al., 1924. Fat soluble vitamins; comparative amounts of vitamin A and antirachitic factor in butter fat and cod liver oil. J. Metab. Research 6: 169-187.

(4399) Jones, J. H.; et al., 1925. Fettlosliche Vitamine. XXII. Vergleich des Gehaltes an vitamin A und antirachitischem Faktor in Butter und Lebertran. J. metabol. Res. 6. 169-187.

(4400) Jones, J. H.; et al., 1943. Vitamin A studies in fattening feeder calves and yearlings. Bull. Texas Agric. Exptl. Sta. 630: 1-52.

(4401) Jones, J. I. M., 1943. Spectrophotometric determination of vitamin A in fish-liver oils. Analyst 68: 8-13.

(4402) Jones, J. M., and T. McLachlan., 1929. Malt extract and oil emulsions. I. Composition of commercial malt extract and cod-liver oil emulsions. Quart. J. Pharm. 1: 400-401.

(4403) Jones, P. E., and D. C. Smith., 1947. Porokeratosis: Review and report of cases. Arch. Derm. and Syph. 56(4): 425-436.

(4404) Jones, W. S., and W. G. Christiansen., 1935. Vitamin A-comparison of spectrometric method and antimony trichloride test for estimation of potency. J. Am. Pharm. A. 24: 1072-1074.

(4405) Jones, W. G.; et al., 1956. Effects of supplementing a calf ration with trace minerals. Aureomycin, and other dietary constituents as measured by growth and feed consumption. J. Dairy Sci. 39: 188-195.

(4406) Jones, W. S., and W. G. Christiansen. 1932. The vitamin potency of various grades of cod-liver oil. J. Am. Pharm. Assoc. 21: 145-147.

(4407) Jones, W. W.; et al., 1941. Papya production in the Hawaiian Islands. Hawaii Agr. Exptl. Sta., Bull. 87: 5-64.

(4408) Jonsson, G.; et al., 1941. Om skorbut som sekundarforeteelse vid A-avitaminos. (Scurvy as secondary phenomenon in A-vitaminosis.) Svensk Veterinartidskr. 46:(7): 209-216.

(4409) Jonsson, G.; et al., 1942. Vitamin A-scurvy as secondary phenomenon in deficiency. Ztschr. f. Vitaminforsch. 12: 300-320.

(4410) Jonsson, G.; et al., 1944. Lack of vitamin A as cause of scurvy. Svensk Veterinar. Tidskr. 49(10: 338-345.

(4411) Jonsson, G.; et al., 1944. Scurvy as a secondary condition in avitaminosis. Z. Vitaminforsch. 15:115-140.

(4412) Jorstad, L. H., and C. G. Johnston., 1926. Reaction produced by lipoid solvents in animals fed diets deficient and high in vitamin A. Proc. Soc. Exper. Biol. & Med. 24: 86-88.

(4413) Jorstad, L. H., 1925. Die Bezichung von Vitaminen zur Reaktion, die Steinkohlenteer in tierischen Geweben Veranlaßt. Journ. Exp. Med. 42: 221-229.

(4414) Jorstad, L. H., and C. G. Johnston., 1926. Reaction produced by lipoid solvents in animals fed diets deficient and high in vitamin A. Proc. Soc. Exptl. Biol. & Med. 24(1): 86-88.

(4415) Jorstad, L. H., and C. G. Johnston., 1927. Vitamin A-local and systemic changes induced by lipoid solvents in animals fed on diets varying in vitamin content. Am. J. Path. 3: 489-499.

(4416) Jorstad, L. H., 1930. Einige Beobachtungen uber Aktivierung von Vitamin A und D in der Hefe durch Rontgen:- und andere Strahlen. Proceed. Soc. Exptl. Biol. Med. 27: 930-932.

(4417) Joseph, K.; et al., 1962. Chemische Zusammensetzung und Lager fahigkeit von gekraftigtem Erdnußmehl und von Gemischen von Erdnußmehl und Magermilchpulver. Food. Sci. (Mysore, India) 11: 171-173.

(4418) Josephs, H. W., 1939. Vitamin A-relation of vitamin and carotene to serum lipids. Bull. Johns Hopkins Hosp. 65: 112-124.

(4419) Josephs, H. W.; et al., 1941. Vitamin A-relation of blood level and adaptation to dim light to diet. Bull. Johs Hopkins Hosp. 68: 375-387.

(4420) Josephs, H. W., 1942. Vitamin A-influence on serum lipids of normal and deficient rats. Bull. Johns Hopkins Hosp. 71: 265-281.

(4421) Josephs, H. W., 1942. Vitamin A-factors influencing level in blood of rats (relation to storage in liver). Bull. Johns Hopkins Hosp. 71: 253-264.

(4422) Josephs, H. W., 1943. Vitamin A and total lipid of serum in pneumonia. Am. J. Dis. Child. 65: 712-727.

(4423) Josephs, H. W., 1944. Vitamin A-hypervitaminosis and carotenemia. Am. J. Dis. Child. 67: 33-43.

(4424) Josephs, H. W., 1945. Vitamin A-lipid response to administration; possible test for deficiency. 77: 402-407.

(4425) Josephson, E. M., and M. Freiberger., 1937. Carotene therapy of retinitis pigmentosa. Nature 139: 155.

(4426) Josephy, B., 1933. Ultra-violet absorption and Lovibond unit of vitamin A-containing oils and fats. Acta Brevia Neerland. Physiol., Pharmacol., Microbiol. 3: 133-135.

(4427) Joshi, V. C.; et al., 1965. Metabolism of coenzyme Q and ubichromenol in rat tissues. Biochem. Biophys. Res. Commun. 18(1): 108-114.

(4428) Joshi, V. C., et al., 1966. Biosynthesis of ubiquinone and ubichromenol in vitamin A-deficient rats. Biochim Biophys Acta. 115: 294-305.

(4429) Jouanneteau, J.; et al., 1962. Lipid and vitamin contents of the hepatopancreas and striated muscles of Scorpaena porcus after normal alimentation and after a period of fasting. Compt. Rend. Soc. Biol. 156: 1848-1850.

(4430) Jouanneteau, J., and G. Zwingelstein., 1968. Vitamin A metabolism during the development of various types of stress. II. Effect of carbon tetrachloride poisoning on hepatic vitamin A esterase. C. R. Soc. Biol. 162:(7): 1359-1362.

(4431) Jowett, W. G., and W. Davies., 1938. A chemical study of some Australian fish. Australia, Council Sci. Ind. Research, Pamphlet (85): 40pp.

(4432) Jowsey, J.; et al., 1968. Bone changes in a patient with hypervitaminosis A. J. Clin Endocr. 28: 1833-1835.

(4433) Joyeaux, C., and J. Sautet., 1938. The influence of vitamin A deficiency on the development of ringworm due to Microsporon felineum. Bull. Soc. Franc. Dermatol. Syphil. 45: 1038-1040.

(4434) Joyet-Lavergne, Ph., 1934. The factors of cellular multiplication. Compt. Rend. 199: 1339-1341.

(4435) Joyet-Lavergne, Ph., 1935. Untersuchungen uber die Oxydoreduktionskatalyse in der lebenden Zelle. Protoplasma 23: 50-69.

(4436) Joyet-Lavergne, P., 1935. Vitamin A-vitamin content of erythrocytes in blood ov vertebrates. Compt. Rend. Acad. d. Sci. 201: 1219-1221.

(4437) Joyet-Lavergne, P., 1936. Vitamin A-localization in erythrocytes in course of their evolution in vertebrates. Compt. Rend. Acad. d. Sci. 202: 1101-1102.

(4438) Joyet-Lavergne, P., 1936. Vitamin A-cytophysiologic contribution to study of role. Bull. Soc. Chim. Biol. 18: 1041-1054.

(4439) Judkina, L. N.,1954. Ein Versuch zur Anwendung von Sanddornol bei einigen Hauterkrankungen. Nachr. Venerol. Dermatol. (2): 20-24.

(4440) Juhasz-Schaffer, A., 1938. Vitamin A-hemeralopia in pregnancy; relation to vitamin deficiency. Klin Wchnschr. 17: 407-409.

(4441) Juhasz-Schaffer, A., 1939. Role of the vitamins in ophthalmology. Doc. Ophthal. 1: 271-411.

(4442) Jukes, T. H., 1942. The storage of vitamin A by growing turkeys. Poultry Sci. 21: 357-360.

(4443) Jundell, R. H. and T. Sandberg., 1938. Metabolism in the tooth and prophylaxis against dental caries. Acta. Paediat. 23: 141-144.

(4444) Juneja, H. S.; et al., 1964. Effect of vitamin A deficiency on the concentration of sodium and potassium in the blood plasma of rats. Biochem. J. 91(3): 26c-27c.

(4445) Juneja, H. S.; et al., 1964. Wirkung von Retinsaure auf die reproduktive Leistung mannlicher und weiblicher Ratten. Indian J. Exptl. Biol. 2: 153-154.

(4446) Juneja, H. S.; et al., 1966. The effect of vitamin A deficiency on the biosynthesis of steroid hormones in rats. Biochem. J. 99(1): 138-145.

(4447) Juneja, H. S.; et al., 1969. Metabolism of vitamin A. Effect of hormones on gestation in retinoate-fed female rats. Biochem. J. 111(1): 97-105.

(4448) Jung, A., 1932. Evaluation of food and medicaments on the basis of vitamin requirements. I. Vitamin A. Z. Vitaminforsch, 1: 105-115.

(4449) Jung, A., and M. Ritter., 1942. New Syndrome of paralysis of hind extremities and hydrocephalus in avitaminosis in very young rats. Verhandl. d. Vereins d. Schweitz. Physiol. pp. 6-7.

(4450) Jung. A., 1945. Nutrititive prophylaxis over the food requirement and its covering. Arztl. Monatsh. 1: 57-107.

(4451) Jungalwala, F. B., and H. R. Cama., 1962. Separation of vitamins A1, A2, and allied substances by reverse phase paper chromatography. J. Chromatog. 8: 535-536.

(4452) Jungherr, E., 1943. Nasal histopathology and liver storage in subtotal vitamin A deficiency of chickens. Bull. Storrs. Agric. Exptl. Sta. 250: 1-36.

(4453) Jungherr, E. L.; et al., 1950. Parotid gland lesions in experimental bovine vitamin A deficiency. Jour. Dairy Sci. 33(9): 666-675.

(4454) Junker, M., 1949. Changes in the vitamin A content of herring during the process of preserving (or canning). Arch. Fischereiwiss. 1: 12-20.

(4455) Junker, M., 1956. Vitamin A in fish, crabs, and mussels. Arch. Fischereiwiss. 7: 248-260.

(4456) Junkersdorf, P., and N. Gottschalk. 1926. Growth studies with experimental animals. I. Age changes and factors which determine them. Pfluger's Arch. Ges. Physiol. 212(3/4): 418-440.

(4457) Jurgens, R., and A. Studer., 1951. Experimental leucopenia in the rat and the effects of vitamins, heavy metals and other materials. Acta Haematol. 5(1): 47-64.

(4458) Jurkowitz, L.; et al., 1959. Photochemische und stereochemische Eigenschaften von Carotinoiden bei tiefen Temperaturen. Nature, (London) 184: 614-624.

(4459) Jurkowitz, L., 1962. Determination of vitamin A acid in human plasma after oral administration. Arch. Biochem. and Biophys. 98(2): 337-341.

(4460) Jusatz, H. J., 1933. Vitamin A and lipoid metabolism. Naturwissenschaften. 21: 800.

(4461) Jusatz, H. J., 1933. Experimentelle Untersuchungen uber den Synergismus der Vitamine. Zeitschr. Ges. Exptl. Med. 87(3/4):529-544.

(4462) Jusatz, H. J., 1934. The effect of vitamin A upon the serum Cholesterol. Klin Wochschr. 13: 95-97.

(4463) Jusatz, H. J., 1934. Vitamin A-significance for development and prevention of infections. Deutsche Med. Wchnschr. 60: 573-575.

(4464) Jusatz, H. J., 1934. Versuche uber den Einflußvon Vitaminen auf den Katalasegehalt des Blutes II. Mitt. Klin. Wschr. 13: 727-728.

(4465) Jusatz, H. J., 1936. Vitamin A-influence on immunity in animal organism. Ztschr. f. Immunitatsforsch. u. Exper. Therap. 88: 472-482.

(4466) Jusko-Grundboeck, J., and K. Lewicka., 1960. Level of proteins, vitamin A, and carotene in the blood serum of pigs. Med. Weterynar. (Poland) 16: (7): 417-419.

(4467) Kabaivanski, Y., 1955. Correct rise of the fat, meat, and skin of the dolphin. Rybnoe Khoz. (10): 50-54.

(4468) Kadaba, L., and E. O. Herreid., 1956. A simple modified method for the determination of vitamin A in sterile milk. Jour. Dairy Sci. 39(9): 1247-1250.

(4469) Kadyseva, Ye. A., 1957. The influence of vitamin A on the gastric secretion of patients with certain dermatoses. Vracheb. Delo. 1957(1): 91-92.

(4470) Kaerger, C., 1954. The influence on the digestibility of amide-rich rations fed to rams of trace elements, vitamin A, and thioamino acids. The resorption of $N^{15}$ Ammonium Chloride. Kiel. Milchwirtsch. Forschungsber 6: 243-259.

(4471) Kaeser, H. E., and T. S. Sutton., 1948. Beneficial effect and economic importance of using all colostrum produced in calf raising. Jour. Dairy Sci. 31(7):523-532.

(4472) Kagan, B. M.; et al., 1950. Serum vitamin A and total plasma lipid concentrations as influenced by the oral administration of vitamin A to children with the nephrotic syndrome. Jour. Clin. Invest. 29(2): 141-145.

(4473) Kagan, B. M.; et al., 1950. Absorption of aqueous dispersions of vitamin A alcohol and vitamin A ester in normal children. Jour. Nutrition. 40(2): 275-279.

(4474) Kagan, B. M., and E. Kaiser., 1952. Vitamin A concentration in the liver in the nephrotic syndrome. Jour. Lab. and Clin. Med. 40(1): 12-16.

(4475) Kagan, B. M., 1953. Vitamin A in health and disease. Natl. Vitamin Foundation, Nutrition Symposium Ser. (7): 31-44.

(4476) Kagan, B. M., 1955. Infection and certain vitamins. Ann. N. Y. Acad. Sci. 63: 214-219.

(4477) Kagan, B. M., and E. Kaiser., 1955. Vitamin A metabolism in infection. Effect of sterile abscesses in the rat on serum and tissue vitamin A. J. Nutrition 57, 277-286.

(4478) Kagan, B. M., 1962. Vitamin A malnutrition. In: N orman Joliffe, Editor, Clinical Nutrition. Harper and Brothers: New York. 16. p. 475-505.

(4479) Kahan, A.; et al., 1954. Uber die endokrinen Beziehungen des Vitamin-A-Stoffwechsels und der Netzhautfunktionen. Acta. Med. Acad. Sci. Hung., Suppl. 6: 69-70.

(4480) Kahan, J., 1966. Fluorimetric determination of vitamin A. Scand. J. Clin. Lab. Invest. 18(6): 679-690.

(4481) Kahan, J., 1967. Thin-layer chromatography of vitamin A metabolites in human serum and liver tissue. J. Chromatogr. 30(2): 506-513.

(4482) Kahan, J., 1969. The vitamin A absorption test. I. Studies on children and adults without disorders in the alimentary tract. Scand. J. Gastroent 4: 313-324.

(4483) Kahan, J., 1970. The vitamin A absorption test: II. Studies on children and adults with disorders in the alimentary tract. Scand. J. Gastroenterol 5(1): 5-12.

(4484) Kahn, A. Clark, III. 1966. Univ. Microfilms (Ann Arbor. Mich.). Order No. 66: 10, 469.

(4485) Kahn, R. H., and H. A. Bern., 1950. Antifollikulinwirksamkeit des Vitamins A. Science (New York) 111: 516-517.

*(4486) Kahn, R. H., 1954. Effect of locally applied vitamin A and estrogen on the rat vagina. Am. J. Anat., 95(2): 309-335.

(4487) Kahn, R. H., 1954. Effect of estrogen and of vitamin A on vaginal cornification in tissue culture. Nature, London 174: 317.

(4488) Kahn, S. G., 1955. Metabolism of vitamin-A-2-$C^{14}$ in the rat. Univ. Microfilms (Ann Arbor, Mich.), Publ. No. 13,502, 52pp.

(4489) Kahn. S. G., 1955. A study of the metabolism of vitamin-A-2-$C^{14}$ in the rat. Dissertation Absts. 15(11): 1998.

(4490) Kahnemann, F., 1956. Role of coenzyme I in therapy of various retinal disorders due to probable vitamin A deficiency; clinic-oexperimental study. Ann. Ottal. e Clin. Ocul. 82: 471-478.

(4491) Kaiser, E., and B. M. Kagan., 1952. Method for determination of vitamin A in stool. Proc. Soc. Exptl. Biol. and Med. 80(2): 300-302.

(4492) Kaiser, E.; et al., 1954. Vitamin A metabolism in nephrectomized rats. Proc. Soc. Exptl. Biol. and Med. 85(3): 457-458.

(4493) Kaiser, and B. M. Kagan., 1955. Separation of vitamin A alcohol and vitamin A esters by paper chromatography in serum and tissue extracts. Congr. Intern. Biochim., Resumes Communs. 3 Congr., Brussels. 139-140.

(4494) Kaiser, E., and B. M. Kagan., 1956. Separation of vitamin A alcohol and vitamin A esters by paper chromatography. Arch. Biochem. and Biophys. 63(1): 118-121.

(4495) Kakac, B.; et al., 1967. Thin-layer chromatography without binding agent in drug analysis. X. Determination of vitamins A, D, and E in medicinals after thin-layer chromatographic separation. Pharmazie 22(4):202-205.

(4496) Kakemi, K.; et al., 1970. Mechanism of drug absorption from micellar solution. I. Absorption of solubilized vitamin A from the rat intestine. Chem. Pharm. Bull. (Tokyo) 18: 1563-1568.

(4497) Kakihara, H., 1958. Effects of small quantities of fluorine on the growth of bone, especially epiphyseal cartilage, in vitamin A deficiency. II: Changes in the growth of bone, especially epiphyseal cartilage, due to diets deficient in vitamin A and with fluorine added in small quantities. Shikoku Acta. Med. 12(4): 729-742.

(4498) Kakihara, H., 1958. Effects of small quantities of fluorine on the growth of bone, especially epiphyseal cartilage, in vitamin A deficiency. I. Changes in the growth of bone, especially epiphyseal cartilage, due to diets deficient in vitamin A. Shikoku Igaku Zasshi 12: 721-728.

(4499) Kakuk, T., 1965. The interrelation of vitamin A and D. Magy. Allatorv. Lapja 20(2): 60-62.

(4500) Kalaja, T., 1936. Die Rolle von Vitaminen im Fett-und Lipoidstoffwechsel. Suomen Kemistilehti 9. B. 21-22.

(4501) Kalaja, L., 1939. Histologic studies on effects of vitamins A and B and of inanition on bones of rat. Acta. Soc. Med. Fenn. Duodecim. (Ser. A. Fasc. 3, Art. 7) 21: 1-148.

(4502) Kalbe, I., 1965. On the relationship of beta-carotene and vitamin A in the serum of patients with liver diseases. Deutsch Z. Verdau Stoffwechselkr. 25: 17-22.

(4503) Kalbe, I., 1966. On the vitamin A content of the liver in carcinoma. Deutsch. Gesundh. 21: 1345-1348.

(4504) Kalbe, I., 1966. Studies of Vitamins A and E in peripheral circulatory disorders. Deutsch Gesundh. 21: 1654-1656.

(4505) Kalbe, L., and I. Lubeck., 1966. Vitamin A and E levels in the blood and the liver during heart and kidney diseases. Int. Z. Vitaminforsch 36(1): 16-24.

(4506) Kalitzin, D.; et al., 1968. The influence of vitamin A on the effect of androgenic hormones on the amylase activity of hypophysectomized male rats. Acta Biol. Med. Ger. 20(2): 129-136.

(4507) Kalliomaki, J. L.; et al., 1960. Effect of oral neomycine treatment on blood lipids and intestinal absorption of vitamin A. Ann. Med. Exptl. Fenn. 38: 140-147.

(4508) Kalmykova, V. I., 1964. Vitamin A metabolism in coronary atherosclerosis. Terap. Arkh. 36(3): 78-83.

(4509) Kalmykow, Ss. T., and W. I. Puschkarewa., 1951. A-Avitaminose bei neugeborenen Kalbern. Tierheilkunde 28(1): 43-45.

(4510) Kalter, H., 1960. The teratogenic effects of hypervitaminosis A upon the face and mouth of inbred mice. Ann. N.Y. Acad. Sci. 85: 42-55.

*(4511) Kalter, H., and J. Warkany., 1961. Experimental production of congenital malformations in strains of inbred mice by maternal treatment with hypervitaminosis A. Amer. Jour. Pathol. 38(1): 1-21.

*(4512) Kalter, H., 1964. Teratogenically induced congenital aphakia. Exptl. Eye Res., 3: 228-229.

(4513) Kalyanakrishnan, M. G.; et al., 1951. Vitamin A in milk. IV. Seasonal variation in the vitamin A potency in the milk of cows and buffaloes. Indian J. Dairy Sci. 4: 143-149.

(4514) Kalyanakrishnan, M. G.; et al., 1951. Vitamin A in milk. III. Feeding vitamin A supplement to cows and buffaloes. Indian J. Dairy Sci. 4: 45-52.

(4515) Kamalyan, G. V., and S. M. Araksyan., 1956. The effect of di- and triethanolamine on the auto oxidation of oils and fats. Biokhimiya 21: 313-316.

(4516) Kamath, G. G., and N. G. Magar., 1953. Ultra-violet absorption characteristics of some Indian shark-liver oils. Indian Jour. Med. Res. 41(3): 339-348.

(4517) Kamath, G. G., and N. G. Magar., 1955. Konstituierende Fettsduren und Unverseifbares in Haifisch-Leberol. J. Indian Chem. Soc. 32: 455-462.

(4518) Kamel, M. A., 1938. Vitamin A-dietary aspect of prevention of blindness. Tr. Internat. Ophth. Cong., (La cecite) 5: 156-170.

(4519) Kamenetskif, Sh. E., 1958. Vitamin A deficiency in patients with ulcerous diseases. Voprosy Pitaniya 17 (2): 50-54.

(4520) Kameyama, Y.; et al., 1963. Micromelias in the mouse tetus caused by x-radiation, hypoxia, trypan blue injection or hypervitaminosis A upon mother animals during pregnancy. Ann. Rept. Res. Inst. Environ. Nagoya Univ. 12: 29-39.

(4521) Kameyama, Y., 1964. Strain differences in malformation the extremities of the mouse fetus caused by x-radiation, hypoxia or hypervitaminosis-A of the mother during pregnancy. Ann. Rep. Res. Inst. Environ Med. Nagoya Univ. 13: 49-55.

(4522) Kameyama, N., 1967. Inhibitory effect of excess vitamin A on membrane ATPase. J. Fac. Sci., Univ. Tokyo, Sec. IV. 11(Pt. 2): 181-188.

(4523) Kaminarskaya, A., 1957. Prolonged storage of frozen cod livers at low temperatures. Kholodil'naya Tekh. 34(2): 45-48.

(4524) Kaminarskaya, A., 1959. Gefrieren von Stockfischleber. Kalte-Techn. 36(2): 45-46.

(4525) Kamogawa, T., 1932. Effect of administration of vitamins A and D on healing of fractures. Nagasaki Igakkai Zassi 10:855-857.

(4526) Kampa, E. M., 1953. Effects of vitamin A supplementation and deprivation on visual sensitivity, rhodopsin concentration, and retinal histology of a marine teleost. Gillichthys mirabilis. Bull. Scripps. Inst. Oceanog. Univ. Calif. 6: 199-224.

(4527) Kanai, M.; et al., 1968. Retinol-binding protein; the transport protein for vitamin A in human plasma. J. Clin. Invest. 47(9): 2025-2044.

(4528) Kanzaki, H., 1959. Effects of vitamin A on phosphorus metabolism in the liver. Bitamin (Kyoto) 18(1): 76-87.

(4529) Kamdar, L.; et al., 1967. Shark liver oil and its residue. Fish. Technol. (Ernakulam, India) 4(1): 21-27.

(4530) Kanai, M.; et al., 1968. Retinol-binding protein: The transport protein for vitamin A in human plasma. J. Clin. Invest. 47(9): 2025-2044.

(4531) Kandutsch, A. A., and C. A. Baumann., 1955. Skin sterols. VIII. Effects of carcinogens, cocarcinogens, and of certain hyperplastic agents. Cancer Research 15: 128-132.

(4532) Kane, A. L., 1952. Hypervitaminosis; unusual case. Arizona Med. 9:29-31.

(4533) Kaneda, K., 1956. Carotenoid content of colostrum. Vitamins (Japan) 10: 93-95.

(4534) Kaneko, R., 1941. Influence of vitamin A and D on the changes in bone due to the continuous administration of inorganic irons. J. Oriental Med. 34: 357-370.

(4535) Kaneko, Y., 1954. The peripheral blood volume in the skin. Igaku. Kenkyu 24: 1801-1839.

(4536) Kaneko, R., 1960. Kitol. III. The formation of kitol from vitamin A by the action of light. Nippon Kagaku Zasshi 81: 1876-1882.

(4537) Kanematsu, H.; et al., 1966. The quantitative determination of beta-carotene and vitamin A in margarine. I. Separation and determination of beta-carotene. Bitamin 33(1): 52-56.

(4538) Kanematsu, H.; et al., 1966. Quantitative Bestimmung von beta-Carotin und Vitamin A in Margarine. 2. Mitt. Trennung und Bestimmung von vitamin A. Vitamins (Kyoto) 33: 57-60.

(4539) Kanitz, H. R., and R. Simke., 1936. The experimental investigation of the effect of yeast and lemon juice upon the urinary quotients in avitaminosis-A as a contribution to the pathological physiology of tumors of dietary origin. Z. Krebsforsch. 45: 40-46.

(4540) Kanter, A., 1934. Modification of A hypervitam inosis in young rats by addition of yeast (vitamin B) to diet. Klin. Wchnschr. 13:1157.

(4541) Kao, H. C., and H. C. Sherman., 1940. Influence of nutritional intake upon concentration of vitamin A in body tissues. Proc. Soc. Exptl. Biol. and Med. 45(2): 589-591.

(4542) Kar, J. K., and R. M. Kapadia., 1954. Vitamin A-in treatment of oligozoospermia. Indian J. Med. Sci. 8: 625-630.

(4543) Kaplanskif, S., and T. Balaba., 1946. Transformation of carotene into vitamin A under the action of iodinated casein. Biokhimiya 11: 327-331.

(4544) Kapur, S. P.; et al., 1968. A histochemical study of the development of the mantle-edge and shell in the freshwater gastropod, Helisoma duryi eudiscus. Can. J. Zool. 46(3):481-491.

(4545) Kapuscinski, W. J. and J. Zebrowski., 1950. External hypervitaminosis A in white rats. Klin. Oczna 20:328-331.

(4546) Kar, N. R., 1938. Chemical composition and nutritive value of bananas. Science and Culture 4: 76-84.

(4547) Karasek, F., and F. Skaloud., 1939. Hypervitaminosa A. Biol. Listy (Prague) 24(3): 141-144.

(4548) Karlsson, K. A., and V. Hellstrom. 1957. Vitamin A content of liver from slaughtered animals. Var. Foda 9: 37-38.

(4549) Karmakar, G., 1944. Ghee as a source of vitamin A in Indian dietaries: The effect of cooking on the vitamin content of foods. Indian Med. Gaz. 79(11): 535-538.

(4550) Karmarkar, G., and K. Rajagopal., 1952. Assay of vitamin A and carotene in blood serum. Current Sci. (India) 21:193.

(4551) Karnovsky, M. L.; et al., 1948. South African fish products. XXIX. Composition of the liver oil of the soupfin shark. J. Soc. Chem. Ind. (London) 67: 193-196.

(4552) Karnovsky, M. L.; et al., 1948. South African fish products. XXVIII. The composition of the liver oil of the seven-gilled shark, Heptranchias pectorosus. Jour. Soc. Chem. Indust (London)67(4): 144-147.

(4553) Karnovsky, M. L.; et al., 1948. The transesterification and chromatographic treatment of fish liver oils as a means of concentrating vitamin A. Jour. Amer. Oil Chem. Soc. 25(2): 36-38.

(4554) Karpacheva, V. A., 1963. Quantitative determination of vitamin A and carotene in whole blood. Biokhimiya 28:204-209.

(4555) Karpacheva, V. A., 1964. A micromethod for the determination of carotene and vitamin A in whole blood. Biull. Eksp. Biol. Med. 58:120-121.

(4556) Karpacheva, V. A., 1965. The spectrophotometric micromethod for vitamin A determination in the liver samples of Macaca rhesus monkeys and rabbits. Byul. Eksperim. Biol. i. Med. 59(6): 118-121.

(4557) Karpacheva, V. A., 1967. Comparative study of the minimum daily requirement of vitamin A in rhesus monkeys, acclimatized in a Sukhumi nursery and in those in the process of becoming acclimatized. VOP Antropol. 26: 167-173.

(4558) Karpecheva, V. A.; et al., 1968. Vitamin C metabolism in monkeys with vitamin A deficiency. VOP Pitan 27(1): 30-34.

(4559) Karpatschewa, W. A., 1963. Quantitative Bestimmung von Vitamin A und Carotin im Blut. Biochemie (UdSSR) 28: 204-209.

(4560) Karpacheva, V. A., 1964. A micromethod for determing carotene and vitamin A in whole blood. Byul. Eksp. Biol. Med. 58(7): 120-121.

(4561) Karpacheva, V. A., 1965. Spectrophotometric micromethod for determining the vitamin A content in liver biopsies from monkeys Macaca rhesus) and rabbits. Byul. Eksp. Biol. Med. 59(6): 118-121.

(4562) Karpacheva, V. A.; et al., 1968. Vitamin C metabolism in monkeys in vitamin A deficiency. Vop Pitan 27: 30-34.

(4563) Karpacheva, V. A., 1968. Isolation of metabolite-A from cattle blood, its purification and determination of vitamin A activity. Vop Med. Khim. 14(5): 496-502.

(4564) Karpacheva, V. A., 1969. Applicability of direct spectrophotometry in the ultraviolet region for determining the vitamin A level in blood and liver. Vop. Med. Khim. 15(4): 444-447.

(4565) Karrer, P.; et al., 1928. A contribution to the antimony trichloride reaction for the detection of vitamin A. Arkiv. Kemi. Mineral Geol. 10B(2): 6pp.

(4566) Karrer, P.; et al., 1931. Vitamin A from fish oils. Helv. Chim. Acta 14: 1036-1040.

(4567) Karrer, P.; et al., 1931. Vitamin A from fish oils. Helv. Chim. Acta 14: 1431-1436.

(4568) Karrer, P.; et al., 1931. A-vitamin in the liver of Hippoglossus hippoglossus L. Arkiv. Kemi. Mineral. Geol. 10B 1-4.

(4569) Karrer, P.; et al., 1931. Observations and measurements on vitamin A. Arkiv. Kemi, Mineral, Geol. 10B(12): 6 pp.

(4570) Karrer, P. and K. Schopp. 1932. Trennung von Vitamin A, Carotin und Xanthophyllen. Helv. Chim. Acta. 15: 745-746.

(4571) Karrer, P.; et al., 1932. Lovibond values of the liver oils of different animals and the growh-promoting activity of different vitamin preparations. Helv. Chim. Acta 15: 493-495.

(4572) Karrer, P., and H. Wehrli., 1933. Vitamin-A investigations during twenty five years. Nova Acta. Leopoldina. (N. S.) 1: 175-275.

(4573) Karrer, P.; et al.; 1934. Oxidation products of -carotene. The relation between constitution and vitamin A activity. Helv. Chim. Acta 17: 1169-1172.

(4574) Karrer, P., and E. Bretscher., 1942. Further attempts to purify vitamin $A_2$. Helv. Chim. Acta 25: 1650-1653.

(4575) Karrer, P., and E. Jucker., 1945. Die Konstitution des "574-Chromogens' oder Hepaxanthin aus Lebertran. Helvetica Chim. Acta 28(4): 717-722.

(4576) Karrer, P.; et al., 1945. Zur Kenntnis der Carotinoid-epoxyde Naturliches Vorkommen von Xanthophyll-epoxyd und carotin-epoxyd. Helvitica Chim. Acta 28(6): 1146-1156.

(4577) Karst, H., 1965. The vitamin A economy of the zander (Lucioperca lucioperca (L.)and some other fresh water fish in Germany. Int. Z. Vitaminforsch 35(4): 328-341.

(4578) Kartman, L., 1943. New developments in the study of ectoparasite resistance. Jour. Econ. Ent. 36(3): 372-375.

(4579) Kartman, L., 1949. Preliminary observations on the relation of nutrition to pediculosis of rats and chickens. J. Parasitol. 35: 367-374.

(4580) Kascher, M., and J. G. Baxter., 1945. State of vitamin A in fish liver oils. Indust. and Engineer. Chem., Analyt. Ed. 17(8): 499-503.

(4581) Kaser, M., and J. A. Stekol., 1943. Critical study of Carr-Price reaction for determination of beta-carotene and vitamin A in biological materials. J. Lab. Clin. Med. 28: 904-909.

(4582) Kaser, M.; et al., 1952. Absorption of vitamin A ester and alcohol in conditions of impaired fat absorption and digestion. Fed. Proc. 11(1): 238.

(4583) Kaser, M. M.; et al., 1958. The absorption of vitamin A in dogs following cholecystonephrostomy. J. Nutrition 66(1): 35-44.

(4584) Kasper, A., 1968. Vitamin A supply following a pancreatectomy. Med. Welt. 3: 178-180.

(4585) Kasper, H., 1963. Vitamin A and carotene resorption following pancreatomy and pancreas insufficiency. Klin. Wschr. 41: 83-85.

(4586) Kasper, H. and D. Hoetzel., 1963. Vitamin resorption in the large intestine. Z. Ernachrungswiss. 4: 34-42.

(4587) Kasper, H., and O. Krennrich., 1965. Method improvements in the performance of the liver storage test (vitamin A) according to Guggenheim and Koch. Z. Versuchstier Kunde 6(1/3): 71-79.

(4588) Kasper, H., and H. Voegt., 1965. Vitamin A and carotene levels in the serum after cholecystectomy. Acta Hepato-Splenol. 12(3): 163-168.

(4589) Kasper, H., 1965. Resorption of cocarboxylase, riboflavine-5' -sodium phosphate and vitamin A in the colon. Z. Ernaehrungswiss. 6(1): 54-61.

(4590) Kasper, H., and O. Krennrich., 1965. The influence of phosphatides on the metabolism of vitamin A and carotene (rat). Zgesamte Exptl. Med. 139(7):644-650.

(4591) Kasper, H., 1967. Vitamin resorption after pancreatectomy. Gastroenterologia 107(5): 305-316.

(4592) Kasper, H., and H. A. Kuehn., 1968., Effect of triglycerides of medium chain fatty acids on vitamin A resorption in humans. Klin. Wochenschr. 46(22): 1227-1228.

(4593) Kasper, H., 1968. Vitamin A and carotene concentration in the serum: I. Optimally nourished persons in West Germany. Int. Z. Vitaminforsch 38(2): 142-148.

(4594) Kasper, H., 1969. Intravenous injection of vitamin A palmitate. I. Healthy experimental subjects and patients with liver cirrhosis. Int. Z. Vitaminforsch. 39(1): 13-17.

(4595) Kasper, H., 1969. Intravenous injection of vitamin A palmitate. II. Rats. Int. Z. Vitaminforsch, 39(1): 18-22.

(4596) Kasper, H., and B. Ernst. 1969. The effect of nutrient fat on Vitamin A and carotene absorption. Int. Z. Vitaminforsch 39(1): 23-29.

(4597) Kato, M., 1967. Fatty acid requirements of Drosophila. Bull. Osaka Med. Sch. 13(1): 12-21.

(4598) Katsampes, C..P. ; et al., 1953. Absorption of vitamin A aldehyde(retinene) by children. Pediatrics 12: 191-196.

(4599) Katsui, G., 1947. Content of vitamin A in the viscera of fishes. VII. In the fish collected around the Atsumi Peninsula. Hakko Kogaku Zasshi (J. Fermentation Technol.) 25: 136-139.

(4600) Katsui, G., 1948. Vitamin A in the eyeballs of fish. J. Fermentation Technol. 26: 396-403.

(4601) Katsui, G., 1948. Utilization of vitamin A in fish organs. J. Fermentation Techno. (Japan) 26: 88-97.

(4602) Katsui, G., and T. Masayosi. Spectrographic and histological researches of vitamin A in the eyeballs of "funa" fish. Jour. Fermentation Tech. 28(3): 96-98.

(4603) Katsui, G., 1951. Distribution of vitamin A in the organs of carp (Cyprinus carpio), Carassius carrassius their varieties, and hybrid. Vitamins (Japan) 4:124-126.

(4604) Katsui, G., 1952. Vitamin A in eyeballs of fish. III. Vitamins (Japan) 5: 454-457.

(4605) Katsui, G., 1953. Vitamin A content of eyeballs of Carassius carassius in the famished state. Vitamins (Japan) 6: 68.

(4606) Katsui, G., and K. Onozato., 1955. Influence of dehydroacetic acid on the stability of vitamin A. Vitamins (Japan) 9: 21-23.

(4607) Katsui, G., and H. Kuyama., 1956. Untersuchungen von Antioxydantien fur Vitamin A. Vitamins 10: 115-117.

(4608) Katsui, G., and R. Saigusa. 1959. Physikalisch-chemische Eigenschaften von kristallinischem Vitamin A aus naturlichen Quellen. 1. Mitt. Kristallinisches Vitamin-A-Acetat. Vitamins (Kyoto). 16: 23-27.

(4609) Katsui, G., and T. Jima. 1958. Verabfolgung von Vitamin A in hohen Dosen und Uberdosierungsschaden. 2. Mitt. Fettaufnahme und A-Hypervitaminose. Vitamins (Kyoto). 14: 47-49.

(4610) Katsui, G. 1958. Vitamine und Antioxydantien. J. Oil Chemists' Soc. Japan. 7: 308-312.

(4611) Katsui, G., and T. Iima. 1958. Relation between high doses of vitamin A and hypervitaminosis A. I. Administration of synthetic vitamin A acetate. Bitamin. 14: 44-47.

(4612) Katsui, G., and Y. Ishino. 1959. Farbreaktionen von Vitamin A und seinen verwandten Verbindungen mittels BF -Athylather und SbCl . Vitamins (Kyoto). 16: 289-294.

(4613) Katsui, G., and R. Saigusa. 1959. Untersuchungen uber Vitamin-A-Aldehyd. 1. Mitt. Eine experimentelle Untersuchung der Bedingungen bei der Vitamin-A-Aldehyd-Herstellung aus naturlichem Vitamin-A-Ol. Vitamins (Kyoto). 18: 10-20.

(4614) Katsui, G. 1959. Verabfolgung gro er Mengen von Vitamin A und Hypervitaminose. 4. Mitt. Vergleich der Toxizitat von naturlichem und synthetischem Vitamin A. Vitamins (Kyoto). 17: 164-165.

(4615) Katsui, G., and T. Iima. 1959. Verabfolgung gro er Mengen von Vitamin A und Hypervitaminose. 3. Mitt. Toxizitat von Oxydationsprodukten des Vitamins A. Vitamins (Kyoto). 16: 21-23.

(4616) Katsui, G. ; et al. 1963. Thin-layer chromatography of fat-soluble vitamins. I. Detection of vitamins A, D, E, and K, and their related compounds. Bitamin. 28: 41-44.

(4617) Katsui, G. 1964. Thin-layer chromatography of vitamins. II. Thin-layer chromatography of fat-soluble vitamins. Bitamin. 29(3): 211-218.

(4618) Katsui, G. 1964. Thin layer chromatography of vitamins. I. Techniques of thin layer chromatography. Bitamin. 29(2): 147-153.

(4619) Katsui, G. ; et al. 1966. Reaction products of vitamin A acid with antimony trichloride. J. Vitaminol. (Osaka). 12(2): 122-128.

(4620) Katz, L. N. ; et al. 1943. Blood pressure responses of dogs to vitamin A and vitamin D . Amer. Jour. Physiol. 140(2): 226-229.

(4621) Kauffman, F., and W. von Drigalski. 1933. Investigations on carotene-vitamin A in human organism. Klin. Wchnschr. 12: 306-308.

(4622) Kauffmann-Cosla, O., and J. Roche. 1927. Uber die Ausscheidung von Milchsaure und Acetaldehyd bei der Dyskarbonurie des Diabetes und beim Fehlen der Vitamine A, B, C. Compt. Rend. Soc. Biologie. 97: 807-809.

(4623) Kaufmann, H. P. 1950. Refining of edible oils. Olearia. 4: 5-9.

(4624) Kaufmann, H. P., and J. Budwig. 1952. Paper chromatography in the field of fats. XIV. Examination of polymerized oils. Fette u. Seifen. 54: 348-356.

(4625) Kaunitz, H. ; et al. 1940. Vitamin A-influence of follicular hormone (estrone, estrogen) on deficiency. Acta. Med. Philippina. 2: 205-215.

(4626) Kaunitz, H. ; et al. 1950. An unknown factor with vitamin A activity distilled from lard. J. Nutrition. 42: 375-389.

(4627) Kaunitz, H. ; et al. 1950. Relation of vitamin A and "lard factor" to disease caused by rancid lard. Proc. Soc. Exptl. Biol. Med. 75: 322-326.

(4628) Kaupe, W. 1934. Vitamin A-use in pediatrics. Munchen. Med. Wchnschr. 81: 1885-1886.

(4629) Kawaguchi, T. 1956. Absorption of vitamin A in human intestines. Vitamins (Kyoto). 10: 335-337.

(4630) Kawaguchi, T. 1956. Determination of vitamin A in feces. Vitamins (Japan). 10: 8-11.

(4631) Kawai, K. 1946. Extraction of an antioxidant for vitamin A. Japan. 172, 915.

(4632) Kawai, K. 1926. Cod-liver oil preparations. Brit. 283,265.

(4633) Kawai, K. 1929. Pharmacognostic studies of the liver oil of the Japanese haddock. Jour. Pharmaceut. Soc. Japan. 49(7): Japanese orig., 708-729.

(4634) Kawai, K. 1948. Increasing the efficiency of antioxidant for vitamin A. Japan. 174,912.

(4635) Kawai, K. 1948. Stable vitamin-containing nutrients. Japan. 174,911.

(4636) Kawai, T. ; et al. 1952. Antioxidants for vitamin A in fish-liver oils. I. Antioxidative properties of hydroxycoumarins. J. Pharm. Soc. Japan. 72: 553-556.

(4637) Kawai, T. 1953. Prevention of oxidation of vitamin A. Japan. 2647.

(4638) Kawai, T. ; et al. 1955. Untersuchungen uber Antioxydantien fur Vitamin A in Fischleberol. J. Pharmac. Soc. Japan (Yakugakuzasshi). 75: 274-277.

(4639) Kawai, T. 1955. Stabilization of vitamin A against oxidation. Japan. 1249.

(4640) Kawai, T. ; et al. 1956. Untersuchungen uber Antioxydantien fur Vitamin A in Fischleberol. 3. Mitt. Antioxydative Wirkung von Alkylkresolen. J. Pharmac. Soc. Japan (Yakugakuzasshi). 76: 660-665.

(4641) Kawakami, K. 1932. Vitamin A. I. The absorption spectra of carotenoids. J. Agr. Chem. Soc. Japan. 8: 48-54.

(4642) Kawakita, H. ; et al. 1963. Nutritional studies on the school lunch program. II. Thiamine and riboflavine contents in the breads and flours. Bitamin (Kyoto). 29(5): 445-449.

(4643) Kawasaki, C., and S. Suenaga. 1949. Colorimetric estimation of vitamin A by glyceroldichlorohydrin reagent. J. Pharm. Soc. Japan. 69: 460-463.

(4644) Kawasaki, C., and S. Suenaga. 1953. Determination of vitamin A with 2-phenylazo-p-cresol. Eiyo to Shokuryo. 6: 62-63.

(4645) Kayser, J. ; et al. 1966. Langlebigkeit von Wistar-Ratten bei ad libitum-Futterung mit halbsynthetischem Futter. C. R. Hebd. Seances Acad. Sci., Ser. D 262, D 2063-2065.

(4646) Kayser, J. ; et al. 1966. Growth, behavior and longevity of Wistar rats fed ad libitum with semi-synthetic diets of incomplete and restricted vitamin composition. C. R. Acad. Sci. (D) (Paris). 262: 2630-2633.

(4647) Kayser, J. ; et al. 1969. Growth, signs of avitaminosis and duration of life of Wistar rats receiving semi-synthetic diets containing vitamin A and vitamin B in various proportions. C. R. Acad. Sci. (D) (Paris). 269: 614-617.

(4648) Kazumasa, K. 1966. Influence of intraocular inflammation and effects of vitamins on the action potential of the optic nerve. II. Effects of vitamin medication before onset of inflammation. Nippon. Ganka. Gakkai. Zasshi. 70(3): 353-356.

(4649) Kean, E. L. 1970. Vitamin A deficiency and glycolipid sulfation. J. Lipid. Res. 11(3): 248-258.

(4650) Kearns, W. M. 1937. Vitamin A-urinary calculus; modern management; discussion of stone-forming and dissolving factors; preliminary report on vitamin injections, diet and lactic acid therapy. Wisconsin Med. J. 36: 170-177.

(4651) Keating, E. K. ; et al. 1963. In vitro degradation of vitamin A and carotene by rumen liquor. In: 55th Annual national meeting of the American Society of Animal Science, 1963. Jour. Animal Sci. 22(3): 838.

(4652) Keating, E. K. ; et al. 1964. In vitro degradation of vitamin A and carotene by rumen liquor. Jour. Animal Sci. 23(1): 111-117.

(4653) Keating, J. P. ; et al. 1970. Increased intracranial pressure associated with probable vitamin A deficiency in cystic fibrosis. Pediatrics. 46: 41-46.

(4654) Kehar, N. D. ; et al. 1957. Chemical constants of vegetable oils, vanaspatis, and lard. Studies Fats, Oils and Vanaspatis. 1956: 23-30.

(4655) Kehar, N. D. ; et al. 1957. Vitamin A and carotene content of fats and oils. Studies Fats, Oils and Vanaspatis. 1956: 13-22.

(4656) Kehar, N. D. ; et al. 1957. Absorption of carotene and liver storage of vitamin A. Studies Fats, Oils and Vanapatis. 1956: 91-100.

(4657) Kehren, L. 1948. The detection of antioxidant activity of oil press-cakes from the absorption spectra of vitamin A. Oleagineux. 3: 387-389.

(4658) Keil, H. 1938. The follicular lesions of vitamin A and C deficiencies. Am. J. Digestive Diseases Nutrition. 5: 40-48.

(4659) Keiser, H. ; et al. 1964. Lysosomes. IV. Solubilization of enzymes during mitochondrial swelling and disruption of lysosomes by streptolysin S and other hemolytic agents. J. Cell. Biol. 22(1): 101-113.

(4660) Keller, W., and F. Weiss. 1955. Polarographic determination of vitamin A. Z. Anal. Chem. 148: 26-29.

(4661) Keller, W., and F. Weiss. 1957. Polarographic determination of vitamin A in fish-liver oil. Z. Anal. Chem. 154: 241-245.

(4662) Kellerman, J. H. ; et al. 1943. Paresis in pigs in relation to nutritional deficiencies. Onderstepoort J. Vet. Sci. Animal Ind. 18: 225-262.

(4663) Kelley, B., and H. G. Day. 1948. Thiouracil and the conversion of carotene to vitamin A in the rat. J. Biol. Chem. 175: 863-866.

(4664) Kelley, B., and H. G. Day. 1950. Effect of xanthophyll on the utilization of carotene and vitamin A by the rat. J. Nutrition. 40: 159-168.

(4665) Kelner, M. 1966. Vitamina A e caroteno no ciclo gravido-puerperal; estudo de alguns aspectos em pacientes pobres do Recife. Recife. Imp. Universitaria. 125p.

(4666) Kelner, M. ; et al. 1969. Vitamin A and carotene in the pregnancy-puerperium cycle. Aspects studied in poor patients from Recife. Rev. Brasil. Med. 26: 520-531.

(4667) Kemmerer, A. R. ; et al. 1942. The relation between the vitamin-A-active carotenoids in corn and the number of genes for yellow color. Cereal Chem. 19(4): 525-528.

(4668) Kemmerer, A. R., and G. S. Fraps. 1943. The vitamin A content of commercial butters sold in Texas. Bull. Texas Agric. Exptl. Sta. 629: 1-12.

(4669) Kemmerer, A. R., and G. S. Fraps. 1943. The vitamin A content of commercial butters sold in Texas. Texas Agr. Exptl. Sta. Bull. 629: 7pp.

(4670) Kemmerer, A. R., and G. S. Fraps. 1945. Vitamin A activity of neo- -carotene U and its steric rearrangement in digestive tract of rats. J. Biol. Chem. 161: 305-309.

(4671) Kemmerer, A. R., and G. S. Fraps. 1945. Relative value of carotene in vegetables for growth of the white rat. Arch. Biochem. 8(2): 197-201.

(4672) Kemmerer, A. R. ; et al. 1946. Effect of thyroprotein on vitamin content of milk. Proc. Soc. Exptl. Biol. Med. 63: 309-310.

(4673) Kemmerer, A. R. ; et al. 1947. Effect of xanthophylls, chlorophylls, sulfasuxidine, and -tocopherol on the utilization of carotene by rats. Arch. Biochem. 12(1): 135-138.

(4674) Kemp, W. B. 1946. Agricultural research-1946. Maryland Agr. Exptl. Sta., Ann. Rept. 59: 1-170.

(4675) Kempa, B., and A. Tomaszewska. 1955. The effect of steam treatment on the yield of fat and vitamin A from cod-liver oil. Przemysl Rolny i Spoz. 9(9): 271-275.

(4676) Kempa, B., and A. Tomaszewska. 1955. Untersuchung der Ergiebigkeit an Fett und Vitamin A in Abhangigkeit vom Trangewinnungsverfahren. Przemysl Spozywczy. 9: 371-375.

(4677) Kendall, A. I., and S. R. Gifford. 1930. Vitamin A-trachoma and avitaminosis. Arch. Ophth. 4: 322-325.

(4678) Kendler, J., and M. Perek. 1968. Effect of dietary ascorbic acid on vitamin A deficiency in chicks. Poultry Sci. 47(4): 1176-1179.

(4679) Kenesarin, T. A. 1961. Blood level of some respiratory enzymes and vitamins in fine-wooled sheep of Kazakh variety. Tr. Alma-Atinsk. Zoovet. Inst. 12: 512-517.

(4680) Kenesarin, T. A. 1965. Dynamics of some enzymes and vitamins in the treatment of bronchopneumonia of the sheep with antibiotics. Vestn. Sel'skokhoz. Nauki, Min. Sel'sk. Khoz. Kaz. SSR. 8(9): 30-37.

(4681) Kenmoku, A., and H. Iwao. 1960. A simple procedure to remove interferring materials which hinder the Carr-Price reaction of vitamin A. 1. In case of vitamin-A-enriched fish sausages. Ann. Rept. Natl. Inst. Nutrition (Tokyo). 1960: 68-69.

(4682) Kenmoku, A., and H. Iwao. 1962. Change of the vitamin A concentration in enriched fish sausage during storage in summer. Eiyogaku Zasshi. 20: 108-110.

(4683) Kenmoku, A. ; et al. 1962. Determination of vitamin A in enriched foods containing pepper. Eiyogaku Zasshi. 20: 8-12.

(4684) Kent, S. P. 1952. Beobachtungen uber die Spezifitat des Schultzschen histochemischen Tests zum Nachweis von Cholesterin in Geweben. A. Med. Asso. Arch. Pathol. 54: 439-442.

(4685) Kentgens, S. K. 1938. Vitamin A-relation of pregnancy to disturbances of dark adaptation of eyes and to vitamin content of blood. Acta. Ophth. 16: 332-343.

(4686) Kentie, A., and W. Th. Nauta. 1945. Hydrogenation of fatty acids in butter with Raney nickel. Rec. Trav. Chim. 64: 159-164.

(4687) Kepinov, L. 1939. Etude de l'influence des vitamines sur le fonctionnement du lobe anterieur de l'hypophyse. Compt. Rend. Acad. Sci. (Paris). 209(6): 358-360.

(4688) Kepinov, L. 1940. Vitamins A and E as stimulating agents of glycogenotropic hormone of anterior pituitary lobe. Compt. Rend. Acad. d. Sci. 210: 188-190.

(4689) Keresztesi, K. 1961. Mineralhaushalt und Zahne. Z. Ernahrungswiss., Suppl. 1: 102-109.

(4690) Kern, C. J. ; et al. 1949. Vitamin A alcohol stability and adsorption, influence of antioxidants. Indust. and Engineer. Chem. 41(12): 2849-2853.

(4691) Kern, C. J., and T. Antoshkiw. 1950. Vitamin A alcohol stability and absorption in aqueous and oily media. Indust. and Engineer. Chem. 42(4): 709-713.

(4692) Kerppola, W. 1929. Untersuchungen uber A- und D-Vitamine. I. Die Farbenreaktionen des Fischlebertrans mit Kondensationsstoffen. Skand. Arch. Physiol. 56: 173-180.

(4693) Kerppola, W. 1930. Untersuchungen uber A- und D-Vitamine. VIII. Uber die Beziehung des Chromogens des Fischlebertrans zum Cholesterin, zum Ergosterin und zu den A- und D-Vitaminen. Skand. Arch. Physiol. 60: 311-319.

(4694) Kerppola, W. 1929. Isolation, identification and occurrence of vitamin A. Acta. Med. Scand., Suppl. 34: 170-175.

(4695) Kerppola, W. 1929. Untersuchungen uber A- und D-Vitamine. VI. Die Farbenreaktionen von Menschen- und Tierorganen und von tierischen Produkten mit Hilfe des Antimontrichlorids. Skand. Arch. Physiol. 56: 207-209.

(4696) Kerppola, W. 1929. Appearance of antimony trichloride color reaction in organs of rats free from vitamin A. Skandin. Arch. f. Physiol. 56: 181-187.

(4697) Kerppola, W. 1929. Untersuchungen uber A- und D-Vitamins. VII. Die Farbenreaktionen des Blutes mit Hilfe von Antimontrichlorid in gewissen Krankheitszustanden. Skand. Arch. Physiol. 56: 210-215.

(4698) Kerycka, M. ; et al. 1968. Utilization of vitamin A and its precursors by rats. Zesz. Nauk. Szk. Gl. Gospod. Wiejsk. Warszawie, Technol. Rolno-Spozyw. 1968(5): 89-99.

(4699) Ketz, H. A. ; et al. 1962. Renal steroid excretion in experimental vitamin A deficiency. Biochem. Z. 335: 345-350.

(4700) Keyes, E. A. ; et al. 1957. Intermittent colostrum feeding and its effect upon blood plasma, vitamin A, carotene, calcium, and phosphorus of dairy calves. Proc. 38th Ann. Meeting Western Div. Am. Dairy Sci. Assoc. 1957, 17pp.

(4701) Khain, Makarova, G. A. 1953. Significance of A and group B vitamins in skeletal growth. Arkh. Patol. 15(2): 66-72.

(4702) Khan, A. H., and S. A. Haq. 1958. Marine edible fishes. I. Distribution of oil and vitamin A in the skin, flesh, and liver of edible fishes of Karachi waters. Pakistan J. Sci. Ind. Research. 1: 309-311.

(4703) Khan, K. U., and T. C. Appanna. 1967. Carotene and vitamin A in camel milk. J. Nutr. Diet. 4(1): 17-20.

(4704) Khan, M. R. 1953. Synthetic vitamin A and the future of the fish-liver-oil-industry, particularly in Pakistan. Agr. Pakistan. 4: 17-22.

(4705) Khan, N. U. 1945. Night vision and vitamin A. Indian M. Gaz. 80: 608-612.

(4706) Khogali, A. 1960. Knochenstarke und Calciumretention von Ratten bei Hypervitaminose A. J. Physiology. 154: 45-46.

*(4707) Khogali, A. 1966. Bone strength and bone retention of rats in hypervitaminosis A. Quart. J. Exptl. Physiol. 51(2): 120-129.

(4708) Khokhol, I. N. ; et al. 1970. Dynamics of the level of fat-soluble vitamins A and E and carotene in blood serum in chronic angiocholecystitis in children. Vop. Okhr. Materin. Dets. 15: 87.

(4709) Khudoyarov, I. 1965. The blood serum vitamin A and carotene contents in sialolithiasis. Med. Zh. Uzbekistana. 1965(5): 42-45.

(4710) Khudoyarov, I., and A. G. Bobkov. 1965. Salivary gladular changes in avitaminosis 'A' in rats. Unedited Rough Draft Trans. of Stomatologiya (USSR). 1: 45-50.

(4711) Kibed, A. V. V. 1942. The participation of vitamin A in production of the seborrheic dermatoses. Arch. Dermatol. Syphilis. 183: 15-42.

(4712) Kieferle, F. ; et al. 1949. Carotene as a pigment and provitamin for butter. Proc. 12th Intern. Dairy Congr. (Stockholm). 1: 69-82.

(4713) Kieferle, F., and A. Seuss. 1949. Carotenization and vitaminization of milk by the dairy cow. Die Milchwissenschaft. 4: 351-361.

(4714) Kieferle, F. 1952. Carotinisierung und Vitaminisierung der Milch und der Butter uber die Milchkuh. Pharmazie. 7: 291-296.

(4715) Kienholz, M. 1963. Beeinflussung bakterieller Toxine durch Kamillenund Meerrettich-Inhaltsstoffe. Arzneimittel-Forsch. 13: 1109-1116.

(4716) Kieseker, F. G., and J. Dunkerley. 1966. Vitamin fortification of recombined sweetened condensed milk (vitamins A, B. D). Aust. Dairy Technol. 21(3): 110-111.

(4717) Kik, M. C., and E. V. Mc Collum. 1928. Der Nahrwert von Kabeljau und Hering (clupea Harnegus). Amer. Journ. Hygiene. 8: 671-693.

(4718) Kik, M. C., and B. Sure. 1932. Vitamin A-influence of deficiency on albumin-globutin ratio of blood of albino rat. Proc. Soc. Exper. Biol. and Med. 29: 463.

(4719) Kilgore, B. F. 1940. Vitamins in ophthalmology. J. Iowa State Med. Soc. 30: 394-400.

(4720) Kim, D. Y. 1965. The influences of vitamin A and cyanocobalamin on fracture healing. New Med. J. 8(1): 93-98.

(4721) Kim, H. O. ; et al. 1968. Effect of vitamin C on hypervitaminosis A. Ch'oesin Uihak. 11(5): 55-59.

(4722) Kimbel, K. H., and M. Wigger. 1954. Die Resorption verschiedener synthetischer Vitamin-A-Praparate. Arzneimittel-Forsch. 4: 703-706.

(4723) Kimbel, K. H. ; et al. 1955. Enteral antibiosis in rat; resorption of vitamin A after prolonged administration of chlortetracycline. Ztschr. Ges. Exper. Med. 126: 141-144.

(4724) Kimble, M. S. 1939. The photocolorimetric determination of vitamin A and carotene in human plasma. Jour. Lab. and Clin. Med. 24(10): 1055-1065.

(4725) Kimble, M. S. ; et al. 1946. Vitamin A and carotene metabolism in the diabetic as reflected in blood levels. Am. J. Med. Sci. 212: 574-585.

(4726) Kimura, E. ; et al. 1957. Photoproducts of rhodopsin bleached in the separated outer segments of retinal rods. Osaka Shiritsu Daigaku Igaku Zasshi. 6: 352-357.

(4727) Kimura, H. 1928. Influence of vitamin A on hypercholesterolemia. Acta. Scholae Med. Kioto Imp. Univ. 11(2); 319-324.

(4728) Kimura, K. 1956. Photolytic microdetermination of vitamin A in blood serum. Vitamins (Kyoto). 11: 362-368.

(4729) Kimura, K., and A. Fujita. 1956. The determination of plasma vitamin A using glycerol dichlorohydrin. J. Vitaminol. 2: 227-231.

(4730) Kimura, K. 1956. Vitamin A content of the normal plasma of Japanese adults. Vitamins (Japan). 10: 163-166.

(4731) Kimura, K., and A. Fujita. 1957. Photolytic micro-determination of vitamin A in blood serum. Jour. Vitaminol. 3(2): 155-164.

(4732) Kimura, K. 1958. Anderungen des Vitamin-A-Wertes im Blutserum nach Aufnahme von Vitamin A. Vitamins(Kyoto). 14: 19-20.

(4733) Kimura, K. 1958. Changes in serum carotene and vitamin A levels after ingestion of carotene. Bitamin. 14: 21-26.

(4734) Kimura, K. 1958. Carotinstoffwechselexperimente. 1. Mitt. Das Schicksal des Carotins und Vitamins A im Tierkorper vor und nach Belastung mit Carotin und der Einflu des Tocopherols. Vitamins(Kyoto). 14: 570-575.

(4735) Kimura, S. 1967. The experimental study of hypervitaminosis A. Kyoto Furitsu Ika Daigaku Zasshi. 76(5): 510-528.

(4736) King, E. J. 1932. Vitamin A research-the chemical aspects. Can. Chem. Met. 16: 266-269.

(4737) King, J. D. 1936. Vitamin A-dietary deficiency nerve lesions and dental tissues. J. Physiol. 88: 62-77.

(4738) King, J. D. ; et al. 1938. Degenerative changes in the axis cylinders of the dental nerves, due to diets deficient in vitamin A and carotene. Jour. Physiol. 93(3): 206-214.

(4739) King, T. R., and H. W. Titus. 1943. Acorns of the willow oak, Quercus phellos, a source of vitamin A activity. Poultry Sci. 22: 56-60.

(4740) Kini, U. S. 1945. Vitamin A in shark livers. Current Sci. 14: 104.

(4741) Kini, U. S., and R. Jayaraman. 1947. Mode of distribution of vitamin A in shark livers. Jour. Sci. and Indust. Res. (India). 6B(5): 66-68.

(4742) Kinley, L. J., and R. F. Krause. 1959. Influence of vitamin A on cholesterol blood levels. Proc. Soc. Exptl. Biol. and Med. 102(2): 353-355.

(4743) Kinsky, S. C. 1963. Comparative responses of mammalian erythrocytes and microbial protoplasts to polyene antibiotics and vitamin A. Arch. Biochem. and Biophys. 102(2): 180-188.

(4744) Kinumaki, T., and K. Tabei. 1954. Stabilizing effect of commercial antioxidants on vitamin A concentrate. Bull. Japanese Soc. Sci. Fish. 20(6): 539-550.

(4745) Kinumaki, T. ; et al. 1963. Fatty acid composition of vitamin A esters in fish liver oils. J. Vitaminol. 9(2): 160-167.

(4746) Kirk, E., and M. Chieffi. 1948. Vitamin studies in middle-aged and old individuals. I. Vitamin A, total carotene, and carotene concentrations in plasma. Jour. Nutrition. 36(2): 315-322.

(4747) Kirk, J. E., and M. Chieffi. 1952. Hypovitaminemia A: effect of vitamin A administration on plasma vitamin A concentration, conjunctival changes, dark adaption, and toad skin. J. Clin. Nutrition. 1: 37-43.

(4748) Kirk, W.; et al. 1970. Vitamin A and B-carotene in liver and blood of cows grazing pangolagrass. J. Range Manage. 23(2): 136-139.

(4749) Kirko, V. V. 1969. Hyperkeratosis of the epithelium of the mucous membranes in patients with chronic tonsillitis and the supply of the organism with vitamin A. Zh. Ushn. Nos. Gorl. Bolez. 29(6): 14-16.

(4750) Kirsanova, V. A., 1938. Changes in the carotene content during the ripening and over-ripening of "Best-of-All" tomatoes. Voprosy Pitaniya U. S. S. R. 7(4-5): 45-46.

(4751) Kirwan, E. O"G. ;et al., 1941. Nutrition and its bearing on preventable blindness and eye diseases in Bengal. Indian J. Med. Research 29: 119-124.

(4752) Kirwan, E. O"G. ; et al., 1943. Nutrition and its bearing on preventable blindness and eye diseases in Bengal. Indian Jour. Med. Res. 31(1): 49-62.

(4753) Kishi, T., 1969. On a study of postmortem changes in organs. Nichidai Igaku Zasshi 28(12): 1287-1308.

(4754) Kiss, I., 1968. Hatching-biological evaluation of goose eggs with special regard to the level of vitamin A and carotene. Agrartud. Egyet. Kozlem., Godollo 85-99.

(4755) Kisselew, G. I., 1958. Die Konzantrationsanderungen von Calcium, Phosphor, Carotin und Vitamin A im Blut von Kuhen in Abhangigkeit von der Jahreszeit und der Intensitat der Lactation. Ukrain Biochem. J. 30: 724-731.

(4756) Kisza, J.; et al., 1966. Veranderungen im Vitaminhaushalt (A, B1, B2, C und beta-Carotin) in normaler und anomaler Milch. Milchwissenschaft 21: 547-550.

(4757) Kitaev, V. N., 1955. Determination of vitamin A and carotene levels for young pigs. Zhivotnovosto 1955(2): 104-106.

(4758) Kitagawa, S.; et al., 1959. Untersuchungen uber den Carotingehalt des Serums. Bestimmung von beta-Carotin im Serum nach Bessy. Jap. J. Nutrit. 17: 169-172.

(4759) Kitagawa, S.; et al., 1959. Untersuchungen uber den Carotinstoffwechsel. 2. Mitt. Das Verhalten des Vitamin-A- und Carotinspiegels im menschlichen Blut bei Carotinzufuhr. Jap. J. Nutrit. 17: 173-176.

(4760) Kitagawa, S.; et al., 1959. Metabolism of carotene. I. Carotene level in blood. Eiyogaku Zasshi 17: 51-54.

(4761) Kitano, Y., 1966. Reconstruction and differentiation of dissociated skin cells from chick embryos in vitro. Med. J. Osaka Univ. 17(1): 99-118.

(4762) Kitano, Y., and Y. Kuroda. 1967. Effects of thyroxine, vitamin A and HeLa cells on differentiation of aggregate of dissociated embryonic chick skin cells in vitro. Exptl. Cell. Res. 48(2) 350-360.

(4763) Kitasima, S., 1939. Vitamin A-electric excitability of human eye during hypovitaminosis. Okayama-Igakkai-Zasshi. 51: 1632-1633.

(4764) Katasima, S., 1939. The influence of experimental hypovitaminosis A on the dark adaptation of the retina. Okayama Igakkai Zassi (Mit. Med. Ges. Okayama) 51: 1617-1623.

(4765) Kitazima, S., 1940. Vitamin A-electric excitability of human eye during hypovitaminosis. Jap. J. M. Sc., III, Biophysics 6:72 -73 .

(4766) Kivimae, A., 1962. Regulation of vitamin A content and color of egg yolk through the feed. K. Lantbrukshogskolan Statens Husdjursforsok, Forhandsmeddelande 152: 23-25.

(4767) Kizevetter, I. V., 1968. Chemical properties of fats from Pacific Ocean fish. Maslo-Zhir. Prom. 34(11): 38-39.

(4768) Kizlaitis, L.; et al., 1962. Nutrient content of variety meats. I. Vitamin A, vitamin C, iron, and proximate composition. J. Food Sci., 27: 459-462.

(4769) Kizlaitis, L.; et al., 1964. Nutrient content of variety meats. II. Effects of cooking on vitamin A, ascorbic acid, iron, and proximate composition. Food Technol. 18(1): 103-104.

(4770) Kjellin, T., 1934. , Vitamin A-study in connection with case of carotinemia after exclusive raw food diet. Svenska Lak.-tidning. 31: 905-912.

(4771) Klaeui, H., and W. Hausheer., 1965. Technical problems in the application of vitamins in food and feed. Chem. Weekblad 61(25): 285-290.

(4772) Klaeui, H., 1963. Stabilized preparations for vitamin enrichment of foods and feeds. Swiss Patent 433,944.

(4773) Klar, E., 1939. Uber den Einflu verschiedener Carotinoide auf den Eintritt des Winterschlafes. Z. Ges. Exp. Med. 105: 161-167.

(4774) Klatte, F. J.; et al., 1964. Zerstorung von Vitamin A in vitro durch den Labmagen- beziehungsweise Panseninhalt. J. Agric. Food. Chem. 12: 420-421.

(4775) Klatte, F. J.; et al., 1964. Stability of vitamin A acetate in ruminal and abomasal fluids. In: Southern section. American Society Animal Science, Atlanta. Jour. Animal Sci. 23(1): 296-297.

(4776) Klauder, J. V., 1960. Treatment of some dermatoses by local injection of vitamin A: histologic effect on human epidermis: effective treatment of plantar warts. AMA Arch. Derm. 81: 253-259.

(4777) Klaui, H.; et al., 1963. Herstellung von vitaminisierten Nahrungs- und Futtermitteln. Ung. Patten 150644.

(4778) Kleber, W.; et al., 1959. Determination of vitamin A in nutritious beverage with a high extract content. Brauwissenschaft 12:274-279.

(4779) Kleine, O., and L. Huber., 1954. Hypervitaminization with vitamin A and vitamin C in inoperable carcinoma according to v. Wendt. Munchen. Med. Wchnschr. 96: 367-370.

(4780) Kleiner-Bossaler, A.; et al., 1971. Vitamin A-Formation of retinoic acid from retinol in the kidney. Arch. Biochem. Biophys 142: 371-377.

(4781) Klemola, V., und W. Hohlweg. 1933. Uber Vitaminmangel und Keratinisierungserscheinungen. Zeitschr. Vitaminforsch. 2(4): 249-253.

(4782) Kligler, I. J.; et al., 1945. Susceptibility of vitamin A-deficient and starved rats and mice to a peroral infection with Salmonella typhi-murium. Jour. Hyg. 44(1): 61-66.

(4783) Kligler, I. J., and K. Guggenheim. 1945. The influence of Salmonella typhimurium infection in rats on vitamin A metabolism. Jour. Hyg. 44(1): 56-60.

(4784) Klimes, I., 1957. Die Bedeutung von Vitamin A und Carotin in der Milch. Za Socialist. Zemedelstvi. 7: 112-115.

(4785) Kline, O. L.; et al., 1932. Carotene and xanthophyll as sources of vitamin A for the growing chick. Jour. Biol. Chem. 97 (1): 83-91.

(4786) Klotz, L.; et al., 1964. Galenik der Vitamine. 4. Mitt. Die Stabilitat von Vitamin A in wa riger Losung. Pharmazie 19: 606-608.

(4787) Klussmann, E., and P. E. Simola., 1933. Vitamin A-determination of effects based on experiments showing development of vaginal keratosis following deficient diet. Biochem. Ztschr. 258: 194-197.

(4788) Kluth, H. J., 1938. Action of vitamin A in diseases of the stomach. Arch. Verdauungs-Krankh. 63: 177-190.

(4789) Knap, J., Vitamin A-vitamin-containing foods in diet of sailors according to Norwegian regulations and suggested improvements in light of recent vitamin research. Nord. hyg. Tidskr. 22: 69-84.

(4790) Knapp, F. W., and A. L. Tappel., 1961. Vergleich der Strahlungsempfindlichkeit der fettloslichen Vitamine bei Gammabestrahlung. J. Agric. Food Chem. 9: 430-433.

(4791) Knapstein, H., 1959. Determination of absorbability of stabilized vitamin A concentrates. Intern. Z. Vitaminforsch. 30: 59-77.

(4792) Knobloch, E., and L. Krenova., 1969. Quantitative determination of vitamin A stereoisomers by the optical absorbance gradient method. Int. Z. Vitaminforsch. 39(2): 131-140.

(4793) Knopfelmacher, W., und F. Reiter., 1929. Xerophthalamie und Lebervergiftung. Ztschr. Ges. Exptl. Medizin 68: 232-237.

(4794) Knudson, A. G., Jr., and Phillip E. Rothman. 1953. A view with a discuss on of vitamin A. Am. J. Diseases Children 85: 316-334.

(4795) Knudsen, P. A., 1965. Congenital malformations of upper incisors in exencephalic mouse embryos, induced by hypervitaminosis A. I. Types and frequency. Acta. Odont. Scand. 23: 71-89.

(4796) Knudsen, P. A., 1965. Congenitalmalformations of upper incisors in exencephalic mouse embryos, induced by hypervitaminosis A. II. Morphology of fused upper incisors. Acta. Odont. Scand. 23: 391-409.

(4797) Knudsen, P. A., 1965. Fusion of upper incisors at bud or cap stage in mouse embryos with exencephaly induced by hypervitaminosis A. Acta Odont. Scand. 23: 549-565.

(4798) Knudsen, P. A., 1966. Congenital malformations of the jaws and related structures in exencephalic mouse embryos with anomalous molar germs, induced by hypervitaminosis. Acta. Odont. Scand. 24: 679-707.

(4799) Knudsen, P. A., 1967. Dental malformations in rat embryos with exencephaly induced by hypervitaminosis. Acta. Odont. Scand. 25: 267-287.

(4800) Knudson, P. A., 1967. The infraseptal nasal glands in mouse embryos with dental malformations and exencephaly induced by hypervitaminosis A., Acta. Odont. Scand. 25: 247-265.

(4801) Knudsen, P. A., 1967. Malformations of upper incisors in exencephalic mouse embryos, indiced by hypervitaminosis A. Tandlaegebladet 71: 199-214.

(4802) Ko C. S., 1964. The effect of cortisone on histological changes of the endocrine glands induced by toxic doses of fat-soluble vitamins. TaehanNackwahak Hoe Chapchi 7(9): 551-570.

(4803) Kobayashi, C. and S. Y. Li., 1937. Vitamin A-investigation of avitaminosis in standardized diet organization. J. Orient Med. (Abstr. Sect.) 26:59.

(4804) Kobayashi, R.; et al., 1959. A histopathologic study of vitamin A deficiency in the growing guniea pig. I. Changes in the mucous membrane of urogenital organs. Acta Pathol. Japan 9: 519-520.

(4805) Kobayashi, T., 1965. Bestimmung von Vitamin A in Gegenwart von Neovitamin A. Vitamins, (Kyoto) 32: 477-481.

(4806) Kobayashi, T., 1965. Bestimmung von Vitamin A in Gegenwart von Neovitamin A. Vitamins (Kyoto) 32: 472-476.

(4807) Kobayashi, T., 1965. The determination of vitamin A in the presence of contaminants containing irrelevant absorption substances. Bitamin 32(5): 482-486.

(4808) Kobayashi, T., 1965. The determination of vitamin A in the presence of contaminants containing irrelevant absorption substances. Bitamin 32(5)487-491.

(4809) Kobayashi, T., 1966. Studies on the determination of vitamin A in the presence of contaminants having irrelevant absorption. J. Vitaminol. (Kyoto) 12(3): 256-261.

(4810) Kobayashi, T., 1966. Studies on the determination of vitamin A in the presence of neovitamin A: II. Influence of neovitamin A in British Pharmacopela and comparison of the vitamin A values estimated by various methods on various samples. J. Vitaminol (Osaka) 12(3): 250-253.

(4811) Kobren, A.; et al., 1939. Effect of pectin supplements on avitaminosis A in rats. Proc. Soc. Exp. Biol. and Med. 41(1): 117-118.

(4812) Koch, C., and F. Perrella., 1955. Vitamin A-results of administration in patients with hearing loss. Arch. Ital. Laring. 63: 312-318.

(4813) Koch, R.; 1952. Effect of vitamins A and E on the glycogen content of the liver. Internat. Zeitschr. Vitaminforsch. 24(1/2): 68-75.

(4814) Koch, W., and D. Kaplan., 1948. A simultaneous Carr-Price reaction for the determination of vitamin A. Jour. Biol. Chem. 173(1): 363-369.

(4815) Koch, W., and D. Kaplan., 1950. Estimation of vitamin A potency in the rat from the threshold dose of storage. Intern. Z. Vitaminforsch. 22: 15-20.

(4816) Kochhar, B. D., 1946. Vitamin A reserve in human liver. Ann. Biochem. Exptl. Med. 6: 77-80.

*(4817) Kochhar, D.M.; et al., 1965. Morphological and autoradiographic studies of cleft palat induced in rat embryos by maternal hypervitaminosis. J. Embryol Exptl. Morph. 14: 223-238.

(4818) Kochhar, D. M., 1967. Teratogenic activity of retinoic acid. Acta. Path. Microbiol. Scand. 70:398-404.

(4819) Kochhar, D. M.; et al., 1968. Effects of vitamin A (retinol) on cell growth and incorporation of labeled glucosamine and proline by mouse fibroblasts in culture. Exptl. Cell. Res. 52(23):591-601.

*(4820) Kochhar, D. M., 1968. Studies of vitamin A-induced teratogenesis: Effects on embryonic mesenchyme and epithelium, and on incorporation of $H^3$-thymidine. Teratology 1(3): 299-308.

(4821) Kochhar, D. M.; et al., 1968. Embryonic uptake of $S^{35}$-sulfate change in level following treatment with some teratogenic agents. Biol. Neonatorium 12(1/2)):41-53.

(4822) Kochi, M., and S. Era., 1957. Studies on the canned tuna-1, Determination of various components in canned tuna. Jour. Shimonoseki Coll. Fish. 7(1): 33-36.

(4823) Kochura, O. D.; et al., 1967. The joint use of vitamins A and E in geriatric dermatology. In: Materlaly VI Nuachnoi sessi Vsesoyuznogo nauchno-issledovatel' skogo instituta vitaminologii. Moscow 187-188.

(4824) Koci, S.; et al., 1967. Vitamin A in chickens. V. The influence of different supplies of vitamin A in the organism of chickens on the nitrogen balance in the case of a quantitatively differentiated nutrition. Ved. Pr. Vysk. Ustav. Chov. Hydiny. Ivanka Pri. Dunaji. 4: 141-154.

(4825) Kodamo, S.; et al., 1940. Histologische und biochemische Studien uber die Phosphatase bei Avitaminosen. Soc. Path. Jap. Trans. 30: 126-130.

(4826) Kodicek, E., und D. R. Ashby., 1954. Papierchromatographie von Vitamin D und anderen Sterinen. Biochem. J. 57: XII-XIII.

(4827) Kodicek, E., 1956. Fat-soluble vitamins. Ann. Rev. Biochem. 25: 497-536.

(4828) Kodicek, J. H., and J. Yudkin., 1942. Vitamin A-slit lamp microscope in nutrition surveys; observations in school children. Lancet 2: 753-756.

(4829) Koehn, C. J., and W. C. Sherman., 1940. Determination of vitamin A and carotene with photoelectric colorimeter. J. Biol. Chem. 132: 527-538.

(4830) Koehn, C. J., 1942. Seasonal variation of the vitamin A content of milk as related to pasture and feeding practices. Assoc. Southern Agr. Workers, Proc. Ann. Convention 43: 105-106.

(4831) Koehn, C. J., 1943. Vitamin A activity of milk as related to pasture and feeding practices in Alabama. J. Dairy Sci. 26: 673-681.

(4832) Koehn, C. J., 1948. Relative biological activity of beta-carotene and vitamin A. Arch. Biochem. 17(2): 337-344.

(4833) Koehne, M., and L. B. Mendel., 1929. Utilization of fatty oils given parenterally. J. Nutrition 1: 399-443.

(4834) Koen, A. L., and Charles R. Shaw., 1966. Retinol and alcohol dehydrogenases in retina and liver. Biochem. Biophys. Acta. 128(1): 48-54.

(4835) Koeppel, M. E., 1935. Uber die Bewertung von Lebertran rein und in verarbeitetem Zustand. Suddtsch. Apoth. Ztg. 75: 1084-1085.

(4836) Koessler, K. K.; et al., Relation of anemia, primary and secondary, to vitamin A deficiency. J.A.M.A. 87: 476-482.

(4837) Koetsveld, E. E. van and M. J. L. Mass., 1958. The calcium, magnesium, and manganese contents of eggs of White Leghorns. Tijdschr. Diergeneesk. 83: 757-773.

(4838) Kofler, M., and S. H. Rubin. 1939. Physicochemical assay of vitamin A and related compounds. Vitamins Hormones (N. Y.) 18:315-319.

(4839) Kohler, H., 1954. Hyperkeratosis, a problem of vitamin A metabolism. Arch. Tierernahr. Beihefte (5): 283-291.

(4840) Kohlmeier, R. H., 1967. Vitamin A and E interrelations in high-concentrate finishing rations for beef cattle. Diss. Abstr. B 27(9): 2937-2938.

(4841) Kohlmeier, R. H.; et al., 1970. Estimation of critical plasma and liver vitamin A levels in feediot cattle with observations upon influences of body stores and daily dietary requirements. J. Anim. Sci. 30:1012-1018.

(4842) Kohman, E. F.; et al., 1926. Vitamine in Buchs ennahrung. Ind. Engin. Chem. 20: 202-204.

(4843) Kohman, E. F.; et al., 1930. Vitamins in canned foods. IX. Tomato products. Indust. & Eng. Chem. 22(9): 1015-1017.

(4844) Kohman, E. F.; et al., 1931. Vitamins in canned foods. X. The vitamin content of some common vegetables. Industr. and Engineer. Chem. 23(7): 808-811.

(4845) Kohman, E. F., 1937. Vitamins in canned foods. Natl. Canners' Assoc. Research Lab., Bull. (19-L): 95pp.

(4846) Kohn, G.; et al., 1943. Levels of vitamin A and C nutrition in Glossop school children and effect of deficiencies on their physical condition. Brit. Med. J. II: 477-480.

(4847) Koike, Y., 1951. Vitamin A-containing oil having high potency. Japan. 1117.

(4848) Koizumi, Iwao.; et al., 1960. Metabolic pathway of carotene to vitamin A in animals. II. Metabolic change of beta-carotene to vitamin A in vitamin $B_1$ -deficient rats. Jour. Vitaminol. (Osaka) 6(3): 211-216.

(4849) Koizumi, Iwao.; et al., 1963. Metabolic pathways of carotene to vitamin A in animals. III. Degradation of beta-carotene and vitamin A in rat intestine. J. Vitaminol 9(2): 154-159.

*(4850) Koizumi, T.; et al., 1969. Effect of excess vitamin A on acid mucopolysaccharides in rat liver. Biochim. Biophys. Acta. 177(3): 486-491.

(4851) Koizumi, T.; et al., 1969. Synthesis and degradation of active sulfate in liver. Bio. Chim. Biophys. Acta. 184(1): 106-113.

(4852) Koj. A.; et al., 1969. Effects of agents labilizing lysosomes on concentrations of "acute-phase" proteins in rabbit plasma. Folia. Biol. (Warsaw) 17(1): 37-47.

(4853) Koku, K., and K. Mizuno., 1959. Absorption of fat-soluble vitamins into the ocular melanin. Japan. J. Ophthalmol. 3: 117-121.

(4854) Kojo, T., 1954. The biochemistry of retina in relation to rhodopsin. Seitai no Kagaku 6: 80-87.

(4855) Kokot, F., 1957. Current treatments for masculine sterility of endocrine origin. Ibid. 168-171. Dissertationes Pharm. 9: 115-130.

(4856) Kolah, N. K., and M. V. R. Rao., 1953. Vitamin A and essential fatty acids in the production of cutaneous lesions in the rat. Current Sci. (India) 22: 207-208.

(4857) Kolataj. A., 1957. The influence of carotenoid pigments and vitamin A on the hatchability of eggs and on the growth of chicks hatched from them. Ann. Univ. Mariae Curie-Sklodowska, Lublin-Polonia. Sec. E. 12: 489-516.

(4858) Kolesov, A. M; et al., 1966. Vitamin-mineral deficiency in bulls. Veterinariya 42(3): 68-72.

(4859) Kollath, W., 1933. Systematization of avitaminosis and vitamins. Med. Klin. 29: 143-146.

(4860) Kollath, W., 1933. Das Wachstumsproblem und die Frage des Zellersatzes in der Vitaminforschung. VII. Das Versagen des Vitamins A als Wachstumsfaktor und seine Ursache. Arch. Exptl. Path. u. Pharmakol. 170(2/3): 285-291.

(4861) Kolodziejska, Z., 1930. Vitamin A-role in pathology. Lek. Wojsk. 16: 243-249.

(4862) Komarov, S. N., and I. N. Volper. 1954. Vitaminization of flour used for children's food with vitamins A and D. Voprosy Pitaniia. 13(6): 32-34.

(4863) Komarov, S. N., and I. N. Vol'per. 1955. Vitaminization of infant food (flour) with vitamins A and D. Vesesoyuz. Nauch-Issledovatel Vitamin. Inst. Vitaminizatsiya Pishchevykh Produktov 18-20.

(4864) Komm, E., 1926. Uber den Vitamingehalt des Nahrmittels ,, Provita". Pharmaz. Zentralhalle 67: 725-727.

(4865) Komm, E., and W. Dietsch. 1927. Vistasterol A and vitamin C content of some food preparations. Ztschr. f. Untersuch. d. Lebensmitt. 53: 307-310.

(4866) Kommerell, B., and H. D. Berger., 1960. Changes in blood coagulation after administration of vitamins A, E, and $B_6$. Klin. Wochschr. 38: 134-137.

(4867) Komori, S.; et al., 1951. Halbtechnische Molekulardestillation von Olen und Fetten. J. Chem. Soc. Japan, Ind. Chem. Sect. 54: 225-227.

(4868) Komori, S.; et al., 1955. Uber die biologische Aktivitat von Vitamin-A-Derivaten. Vitamins (Kyoto) 8:209-213.

(4869) Kon, S. K.; et al., 1938. The effect of commercial sterilization on the nutritive value of milk. I. Introduction. J. Dairy Research 9: 1-5.

(4870) Kon, S. K., 1938. Biennial reviews of the progress of dairy science. Section D. The nutritional value of milk and milk products. J. Dairy Research 9, 242-262.

(4871) Kon, S. K., and C. Maddock., 1938. Effect of vitamin A deficiency on resistance of pigs to tuberculous infection from naturally infected milk. Vet. Record 50: 1693-1697.

(4872) Kon, S. K.; et al., 1944. Relation of the concentration of vitamin A, carotenoids and cholesterol in milk fat to the size of the fat globules. Nature 154: 82.

(4873) Kon, S. K., and E. H. Mawson, 1947. Studies of certain vitamins and other constituents of human milk. Proc. Roy. Soc. Med. 40: 900-903.

(4874) Kon, S. K., and S. Y. Thompson., 1949. Preformed vitamin A in crustacea. Arch. Biochem. 24(1): 233-234.

(4875) Kon, S. K. and E. H. Mawson., 1950. Human milk. Wartime studies of certain vitamins and other constituents. Med. Research Council. (Brit.) Special Rept. Ser. (269): 188 pp.

(4876) Kon, S. K., 1954. Vitamin A in marine invertebrates and the metabolism of carotenoids of plankton. Bull. Soc. Chim. Biol. 36: 209-225.

(4877) Kon, S. K.; et al., 1955. Metabolism of carotene and vitamin A given by mouth or vein in oily solution of aqueous dispersion to calves, rabbits and rats. Brit. Jour. Nutrition 9(3):244-267.

(4878) Kon, S. K., 1962. Vitamins A and $B_{12}$ and some comments on refection. In: Symposium on biochemistry and nutrition, London, England, October 1961. Proc. Roy. Soc. Ser. B. Biol. Sci. 156(964): 351-365.

(4879) Kondrat'ev, M. E., and V. P. Kondrat'ev., 1967. Effect of globulin and trace elements on some blood indices in calves with hypovitaminosis A. Khim. Sel. Khoz. 5(7): 547-550.

(4880) Konermann, H.; et al., 1966. The significance of carotene and vitamin A in intestinal diseases of suckling calves. Deutsch Tieraerztl. Wschr. 73: 543-546.

(4881) Konig, J., und W. Schreiber., Die fluchtigen Stoffe der Nahrungsmittel. Ztschr. Unters. Lebensmittel 53: 1-44.

(4882) Konig, G. and V. Sebesta., 1935. Vitamin A-immunobiologic effect. Orvosi. Hetil. 79: 1171-1172.

(4883) Konig, J., and W. Sebesta., 1935. The immunobiological activity of vitamin A. Arch. Kinderheilk. 106: 159-162.

(4884) Konno, T.; et al. 1968. Vitamin-A deficiency and protein-calorie malnutrition in Cape Town. S. Afr. J. Nutr. 4(3): 950-955.

(4885) Konstantinov., A. A., 1958. Influence of the protein content of the feed on the A avitaminosis of chickens. Invest. Inst. Sravnitelna Patol. Domashnite Zhivotni, Bulgar. Akad. Nauk. 6:255-259.

(4886) Konstantinov, A., and K. C. Lorer., 1965. Histomorphological changes in the glands of the gullet and vitamin A content in the liver of chicks kept on a vitamin A deficient diet. Inv. Inst. Sravnitelna Patol. Zhivotn., Bulgar. Akad. Nauk. 11: 79-87.

(4887) Konstantinov, A., 1965. Alkalische Phosphataseaktivitat in den Organen rachitischer Kuken nach Vitaminbehandlung. Izvest. Inst. Sravnitelna Patol. Zivotnite (Sofkja)11: 89-92.

(4888) Konstantinov, A., 1970. Morphological changes in the ureters as a cause of gout in chicken A avitaminosis. Dokl. Bolg. Akad. Nauk. 23: 461-464.

(4889) Konstantinov, A., 1970. Smears from the cloaca as a means of diagnosticating A avitaminoisis in chickens. Dokl. Bolg. Akad. Nauk. 23: 339-341.

(4890) Kopteva, E. G., 1958. Effects of salicylamide on conditioned reflexes in dogs. Farmakol. i. Toksikol. 21(4): 12-15.

(4891) Korb, J. H., 1939. Perception time and night blindness. U. S. Naval Med. Bull. 37: 392-399.

(4892) Korenchevsky, V. 1921. Experimentelle Rachitis bei Ratten. Brit. Medical Journal. 1921(2): 547-550.

(4893) Korenchevsky, V. 1933. Sterility. Lancet. 224(5723): 964.

(4894) Korenchevsky, V. 1933. Sterility in males on diets deficient in vitamin A or vitamin E. Proc. Roy. Soc. Med. 26(9): 1187-1192.

(4895) Korenchevsky, V. 1950. The effect of vitamins on the heart lesions produced by thyroid hormone in the rat. J. Path. Bact. 62: 53-60.

(4896) Korenjako, A. I., and A. O. Gawrilowa. 1962. Das Praparat Vitamycin . Nachr. Akad. Wiss. UdSSR). 32(6): 80-82.

(4897) Korner, J., and H. P. Loomis. 1946. Stabilization of vitamin A and vitamin A-containing material. U. S. 2,394,456.

(4898) Korner, J. 1947. Stabilisieren von Vitamin enthaltenden Olen und Fetten. A. P. 2 486 177 vom 11/2.

(4899) Korr, L. 1953. Rapid method for calculating the Morton-Stubbs correction in vitamin A assay. Chemist. Analyst. 42: 15.

(4900) Korycka, M. ; et al. 1968. Standard procedure for evaluation of the utilization of compounds showing vitamin A activity in the body. Zesz. Nauk. Szk. Gl. Gospod. Wiejsk. Warszawie, Technol. Rolno-Spozyw. 1968(5): 89-99.

(4901) Korycka, M. ; et al. 1969. Influence of dietary fat-level on the carotene and vitamin A utilization. Acta. Physiol. Pol. 20: 797-804.

(4902) Kossakowska, M., and A. Szczygiel. 1962. Nutrition and dental caries. III. Effects of vitamins A and D on dental decay development in rats fed diets comparable to some human faulty diets. Roczniki. Panstwowego. Zakladu. Hig. 13: 141-149.

(4903) Kossowski, S. ; et al. 1964. Senile deafness and the use of vitamin preparations. Otolaryng. Pol. 18: 335-340.

(4904) Kossel, A. 1966. Hypervitaminosis A, D and K. Landarzt. 42: 1528-1533.

(4905) Kotani, E., and S. Ogawa. 1954. Stabilization of vitamin A or substances containing it. Japan. 7599.

(4906) Kotani, S. 1958. Morphogenesis of ophthalmic malformation of rats produced by A-hypervitaminosis. Jour. Osaka City Med. Center. 7(2): 60-77.

(4907) Kotecheri, S. R. 1967. Biosynthesis of retinol and the effect of protein in rats. Diss. Abstr. B. 28(1): 244.

(4908) Kothe, W. 1951. Fragility of pelvic bones caused by deficiency of vitamins A and D. Zentralbl. Chir. 76: 1102-1105.

(4909) Kotikas, A. 1935. Vitamin A-keratomalacia in breast-fed infant, sign of vitamin deficiency resulting from lack of lipoids in mother's milk. Monatschr. f. Kinderh. 63: 108-112.

(4910) Kouwenhoven, B., and C. J. G. Van Der Horst. 1969. Strongly acid intestinal content and lowered protein, carotene and vitamin A blood levels in Eimeria acervulina infested chickens. Z. Parasitenk. 32(4): 347-353.

(4911) Koval', A. V. 1966. Development of the palate in rats under normal conditions and with an experimental congenital cleft palate. Stomatologiya. 45(6): 34-36.

(4912) Kovats, L. T., and E. Berndorfer-Kraszner. 1966. Prufung der Schutzwirkung von Tocopherolen auf Provitamin A ( -Carotin) und Vitamin A in angereicherter Margarine und in Butter. Periodica Polytechn. (Budapest), Chem. Ingenieurwes. 10: 513-522.

(4913) Kovats, L. T., and E. Kraszner-Berndorfer. 1966. Antioxidative properties of tocopherols. Presented at the 2nd International Congress of Food Science and Technology, Warszawa, Poland, (paper E 1. 4).

(4914) Kovats, M. T., and K. Varga. 1962. Data on the composition of foods. XI. Changes in the composition of butter and margarine. Elelmiszervizsgalati Kozlemen. 8(3/4): 83-90.

(4915) Kowalewski, K. ; et al. 1951. Effect of thyroidectomy on hepatic synthesis of vitamin A. Acta. Gastro-Enterol. Belg. 14: 607-616.

(4916) Kowalewski, K., and W. Gepts. 1951. Vitamin A-storage in liver of rats with experimentally produced hepatic changes. Acta. Gastro-enterol. Belg. 14: 16-23.

(4917) Koyanagi, T., and S. Odagiri. 1957. Untersuchungen uber Vitamin A bei Tieren in der Kalte. 1. Mitt. Uber das Rattenwachstum und Vitamin A bei Kaltestress. Vitamins (Kyoto). 12: 522-524.

(4918) Koyanagi, T., and S. Odagiri. 1960. Effect of vitamin A on the cystine content of the skin of rats. Nature. 186: 809-810.

(4919) Koyangi, T., and S. Odagiri. 1961. Effects of the sulfur amino acids on the vitamin A content in liver of rats. Nature. 192: 168-169.

(4920) Koyanagi, T., and S. Odagiri. 1961. Effect of vitamin A and estradiol on the cystine and hydroxyproline content in skin of rats. Agric. and Biol. Chem. 25(1): 33-36.

(4921) Koyanagi, T., and T. Takanohashi. 1961. Cystine content in hair of children as influenced by vitamin A and animal protein in the diet. Nature (Lond). 192: 457-458.

(4922) Koyanagi, T. ; et al. 1969. Effect of administration of thiamine, riboflavin, ascorbic acid and vitamin A to students on their pantothenic acid contents in serum and urine. Tohoku J. Exp. Med. 98: 357-362.

(4923) Koyanagi, T., and S. Hareyama. 1962. Effect of riboflavin, choline, pantothenic acid and vitamin A on the excretion of sodium in urine of rats. Tohoku Jour. Exptl. Med. 77(4): 390-393.

(4924) Koyanagi, T., and T. Takanohashi. 1962. Effect of single deficiency of vitamin A, thiamine, riboflavine or ascorbic acid on dark adaptation. Tohoku J. Exptl. Med. 78: 258-263.

(4925) Koyanagi, T., and T. Tatebayashi. 1963. Effect of vitamin A on the uptake by rats of sulfur administered as sulfate or methionine. Tohoku Jour. Exptl. Med. 81(2): 138-142.

(4926) Koyanagi, T. 1963. Wirkung von Methionin auf den durch salzreiche Kost hervogerufenen Bluthochdruck von Ratten. Tohoku J. Exptl. Med. 79: 148-151.

(4927) Koyanagi, T. ; et al. 1964. Effect of vitamin A and water-soluble vitamin on the excretion of inorganic sulfate and taurine in the urine of children. Tohoku J. Exptl. Med. 84(1): 62-64.

(4928) Koyanagi, T. ; et al. 1965. Effects of vitamin A and water-soluble vitamins on the urinary excretion of inorganic sulfate and taurine in children. Bitamin. 31(3): 207-209.

(4929) Koyanagi, T., and T. Tatebayashi. 1965. Effect of vitamin A on the uptake of sulfur by rats, administered as sulfate or methionine. Bitamin. 31(1): 1-3.

(4930) Koyanagi, T. ; et al. 1966. Effect of vitamin A and vitamin E on serum cholesterol and atherosclerosis in the hen. Eiyo To Shokuryo. 19(2): 81-84.

(4931) Koyanagi, T.; et al. 1969. Effect of administration of thiamine, riboflavin, ascorbic acid and vitamin A to students on their pantothenic acid content in serum and urine. Vitamins (Kyoto). 40(1): 27-31.

(4932) Koyanagi, T. ; et al. 1969. Effect of administration of thiamine, riboflavin, ascorbic-acid and vitamin A to students on their pantothenic-acid contents in derum and urine. Tohoku. J. Exptl. Med. 98(4): 357-362.

(4933) Kozakiewicz, B. 1966. The effect of deficiency of carotenes and vitamin A on the occurrence of dermatosis in the Zulawy region. Med. Weter. 22(3): 147-150.

(4934) Kozlova, N. S. 1960. Vitamin A and carotene changes in healthy children. Voprosy Okhrany Materinstva i Detstva. 5(5): 22-26.

(4935) Kozlowska, J. 1966. Evaluation of the medical cod liver oil based on some index numbers and on decrease in vitamin A. I. Accelerated test as a quick evaluation method of stability of the medical cod liver oil. Acta. Pol. Pharm. 23: 545-553.

(4936) Kraack, E. 1962. Zweckma ige Natzung von Produktionsabfallen der Fischverarbeiting. Lebensmittelindustrie. 9: 343-344.

(4937) Kracauer, P. 1966. Vitamin product. U. S. 3,243,347. (Cl. 167-181).

(4938) Kraemer, M. L. ; et al. 1964. Dietary vitamin A and copper concentration in the liver and heart of rats. Quart. J. Florida Acad. Sci. 27(1): 86-90.

(4939) Krakower, C. ; et al. 1940. Vitamin A-fate of schistosomes (Schistosoma mansoni) in experimental infections of deficient white rats. Puerto Rico J. Pub. Health and Trop. Med. 16: 269-345.

(4940) Krakower, C. A., and J. H. Axtmayer. 1940. Effect of α-tocopherol on lesions of skeletal muscles in rats on vitamin A-deficient diets. Proc. Soc. Exptl. Biol. Med. 45: 583-586.

(4941) Kramer, B. ; et al. 1947. Serum levels of vitamin A in children. A comparison following the oral and intramuscular administration of vitamin A in oily and in aqueous mediums. Am. J. Diseases Children. 73: 543-553.

(4942) Kramer, B. ; et al. 1951. Aqueous dispersions of vitamins A and D in premature infants. Studies with reference to rickets and retrolental fibroplasia. Am. J. Diseases Children. 82: 17-27.

(4943) Kramer, M. M. ; et al. 1929. Vitamin A content of the green and white leaves of market head lettuce. J. Home Econ. 21: 679-680.

(4944) Kramer, M. M., and R. McCammon. 1932. Determination of the vitamin content of some common fruits and other foods. Kan. Agr. Exptl. Sta., 6th Biennial Rept. of the Director. 113-114.

(4945) Kramer, M. M., and A. T. Agan. 1934. Vitamin A content of Early Richmond and Montmorency cherries. J. Home Econ. 26: 638-639.

(4946) Kramer, M. M. ; et al. 1938. The vitamin A value of colostrum and milk of four cows determined by the single-feeding method. Jour. Agric. Res. 56(3): 227-232.

(4947) Kramer, M., and R. Tarjan. 1958. Carotene metabolism. I. Effect of different dietary proteins on carotene metabolism. Intern. Z. Vitaminforsch. 28: 289-294.

(4948) Kramer, M., and R. Tarjan. 1958. Untersuchungen uber den Carotinstoffwechsel. Acta. Physiol. Acad. Sci. Hung. Suppl. 14: 17.

(4949) Kramer, M., and R. Tarjan. 1960. Carotene metabolism. V. The effect of copper on carotene utilization. Intern. Z. Vitaminforsch. 30: 271-278.

(4950) Kramer, M., and R. Tarjan. 1960. Vitamin A balance. Mezhdun. Konf. Vitamin., Dokl. Suobsht., Sofia. 213-216.

(4951) Kramer, M., and R. Tarjan. 1962. Die Wirkung von Konservierungsmitteln auf die Verwertung von Carotin. Int. Z. Vitaminforsch. (Bern). 32: 149-157.

(4952) Kramer, M. ; et al. 1964. The composition of foods. XVIII. Vitamin content of woman's milk. Elelmiszervizsgalati Kozlemeny. 10(5-6): 118-131.

(4953) Kramer, M. ; et al. 1968. Effects of long-term medication on nutrient utilization. II. Effects of tranquilizers on vitamin metabolism of rats. Nahrung. 12(8): 759-763.

(4954) Kramer, M. ; et al. 1969. Effect of tranquilizers on the metabolism of carbohydrates, vitamins, and lipids in rats. Kiserl. Orvostud. 21(3): 229-237.

(4955) Kramke, E. H. ; et al. 1950. Some factors which affect utilization of vitamin A. Poultry Sci. 29(5): 767-768.

(4956) Kramke, E. H. ; et al. 1952. Some factors which affect utilization of vitamin A. Poultry Sci. 31: 49-53.

(4957) Krasnik, W., and W. Adam. 1967. Serum vitamin A and carotene concentration in patients with polycythemia vera. Pol. Arch. Med. Wewn. 39(3): 313-316.

(4958) Krassowska, T. 1967. Characteristics of ocean perch (Sebastes Marinus) oil. Farm. Pol. 23(5-6): 443-446.

(4959) Krassowska, T. 1969. Vitamin value of oil from the Atlantic cod liver and its production in an annual cycle. Przem. Spozyw. 23(1): 10-11 (Pol).

(4960) Kratochvil, L., and M. Vedlich. 1962. Churning butter from stored cream. Prumysl. Potravin. 13: 473-479.

(4961) Krause, A. C., and A. E. Sidwell Jr. 1938. Die Absorptionsspektra des Sehpurpurs und seiner Spaltprodukte durch Lichteinwirkung. Amer. J. Physiol. 121: 215-223.

(4962) Krause, R. E. ; et al. 1968. Lipid alterations in beagles produced by atherogenic stress and vitamin A. J. Atheroscler Res. 8(2): 277-289.

(4963) Krause, R. F. ; et al. 1947. Blood levels and absorption of vitamin A in children with keratosis follicularis. J. Nutrition. 33: 633-640.

(4964) Krause, R. F., and H. B. Pierce. 1948. Extrahepatic conversion of carotene to vitamin A. Arch. Biochem. 19: 145-148.

* (4965) Krause, R. F. 1949. A paradoxical relationship between serum level and liver content of vitamin A. Jour. Nutrition. 38(4): 535-542.

(4966) Krause, R. F. 1949. Paradoxical relationship between serum level and liver content of vitamin A. Fed. Proc. 8(1): 388.

(4967) Krause, R. F., and C. Alberghini. 1950. The hydrolysis of vitamin A ester. Arch. Biochem. 25(2): 396-400.

(4968) Krause, R. F., and L. T. Powell. 1953. The in vitro hydrolysis and esterification of vitamin A. Arch. Biochem. and Biophys. 44(1): 57-62.

(4969) Krause, R. F. ; et al. 1954. Umwandlung von $^{14}C$-Carotin in eine oder mehrere nicht verseifbare Substanzen bei der Ratte. Proc. Soc. Exptl. Biol. Med. 85: 317-319.

(4970) Krause, R. F., and P. L. Sanders. 1956. The distribution of vitamin A in cells of normal and pathologic human livers. Am. J. Clin. Nutrition. 4: 68-70.

(4971) Krause, R. F. 1956. The uptake of $C^{14}$ by vitamin A in rats. Arch. Biochem. and Biophys. 62(2): 506-507.

(4972) Krause, C., and K. Kowalewski. 1957. Effect of thyroidectomy on the utilization of carotene in dogs. Acta. Gastroenterol. Belg. 20: 114-118.

(4973) Krause, R. F., and P. L. Sanders. 1957. Metabolism of $C^{14}$ labelled beta-carotene in the rat. Proc. Soc. Exptl. Biol. and Med. 95(3): 549-551.

(4974) Krause, R. F. 1965. Liver lipids in a case of hypervitaminosis A. Am. J. Clin. Nutr. 16(6): 455-457.

(4975) Krause, R. F., and P. A. Brown. 1967. Effect of atherosclerosis and vitamin A on glucose tolerance in dogs. Soc. Exptl. Biol. Med. 125(3): 896-898.

(4976) Krause, R. F. ; et al. 1968. Vitamin A deficiency and phospholipid metabolism. Amer J. Clin. Nutr. 22(1): 27-32.

(4977) Krause, R. F. ; et al. 1968. Lipid alterations in beagles produced by atherogenic stress and vitamin A. J. Atheroscler. Res. 8(2): 277-289.

(4978) Krause, R. F. ; et al. 1969. Vitamin A deficiency and phospholipid metabolism. Amer. J. Clin. Nutr. 22(1): 27-32.

(4979) Krause, R. F. ; et al. 1971. Phospholipid metabolism in vitamin A-deficient rats. J. Nutr. 101: 161-168.

(4980) Krauss, W. E., and C. F. Monroe. 1934. Vitamin A content of butter fat produced on corn and wheat rations. Ohio Agr. Exptl. Sta., Bull. 532(52nd Ann. Rept.): 65.

(4981) Krauss, W. E. 1938. Die Milch vom Standpunkt der Ernahrung aus gesehen. J. Milk Technol. 1: 22-26.

(4982) Krauss, W. E. ; et al. 1945. Vitamin A potency of Ohio butter. Ohio Agr. Exptl. Sta., Bi-monthly Bull. 30: 157-163.

(4983) Krauss, W., and H. Grund. 1954. Uber die Absorptionsspektren polarisierter organischer Molekule und deren Gesetzmaßigkeiten. 1. Mitt. Diphenylpolyene. Z. Elektrochem., Ber. Bunsenges. Physik. Chem. 58: 142-149.

(4984) Krauss, W., and H. Grund. 1955. Uber den Protonenangriff bei der sauren Esterhydrolyse. Naturwissenschaften. 42: 461.

(4985) Krauss, W., and H. Grund. 1956. Zum Mechanismus des Farbsehens uber Vitamin-A-aldehyd. 1. Mitt. uber verschiedene Polarisationszustande des Vitamin-A -aldehyds. Vitamine u. Hormone. 7: 26-36.

(4986) Krauss, W. ; et al. 1957. Kritische Bemerkungen zur colorimetrischen Bestimmung organischer Substanzen vermittels polarisierter Zustande insbesondere im biologischen Material. Z. Analyt. Chem. 154: 333-340.

(4987) Krauss, W. ; et al. 1968. Position and integral intensity of infrared C:O valency vibration in highly conjugated carbonyl compounds. II. All-transβ-carotinoid aldehydes. Ber. Bunsenges. Phys. Chem. 72(3): 415-418.

(4988) Kraybill, H. R., and C. L. Shrewsbury. 1936. Relative vitamin A potencies of carotene fed in butter fat and in cottonseed oil. J. Nutrition. 11: 103-110.

(4989) Krebs, A. 1962. Acanthosis nigricans with involvement of the esophagus and vitamin A deficiency. Schweiz. Med. Wschr. 92: 545-552.

(4990) Krechmer, B. B., and S. A. Bayandina. 1947. Biological value of breast milk in relation to its content of vitamins A and B . Pediatriya. 5: 107-111.

(4991) Krehl, W. A. 1952. Vitamin A. I. Visual process. II. Interrelations between provitamins A and vitamin A. Borden's Rev. Nutrition Research. 13: 49-69, 61-69.

(4992) Kreiker, A. 1930. Zur Klinik and Histologie der epithelialen Bindehautxerose. Graefe's Arch. Ophthalmol. 124(1): 191-205.

(4993) Kreisman, B. V., and E. E. Kozlovskaya. 1940. Determining percentage of expressed tomato juice. Konservnaya i Plodoovoshchnaya Prom. 11(2): 20-21.

(4994) Kress, A. ; et al. 1970. Degeneration rates of preimplanted ova of rats with hypervitaminosis A and vitamin A deficiency. Experientia. 26: 392-394.

(4995) Kreula, M., and A. I. Virtanen. 1939. Absorption of carotene from carrots in human subjects. Upsala Lakareforen. Forh. 45: 355-362.

(4996) Krijt, G. 1942-1943. Goat milk as a foodstuff. Voeding. 4: 147-150.

(4997) Kring, P. 1950. Investigations of the ability of some esters of gallic acid and of a few other substances to prevent rancidification of different fats. Dansk. Tids. Farm. 24: 211-227.

(4998) Kring, P. L., and A. Lund. 1958. Absorption and utilization of vitamin A given by different routes. Acta. Pharmacol. Toxicol. 15: 189-196.