DEPARTMENT OF HEALTH & HUMAN SERVICES

Public Health Service

Memorandum

Date MAR 27 1996

From Director, Office of Device Evaluation (HFZ-400)
Center for Devices and Radiological Health (CDRH)

Subject Premarket Approval of VISX, Inc.
VISX Excimer Laser System Models "B" and "C" for Photorefractive Keratectomy (PRK) - ACTION

To The Director, CDRH
ORA _____

ISSUE. Publication of a notice announcing approval of the subject PMA.

FACTS. Tab A contains a FEDERAL REGISTER notice announcing:

(1) a premarket approval order for the above referenced medical device (Tab B); and

(2) the availability of a summary of safety and effectiveness data for the device (Tab C).

RECOMMENDATION. I recommend that the notice be signed and published.

Susan Alpert, Ph.D., M.D.

Attachments
Tab A - Notice
Tab B - Order
Tab C - S & E Summary

DECISION

Approved ___ Disapproved ___ Date _____

Prepared by Jan Callaway, CDRH, HFZ-460, 11/9/95, 594-2018

DEPARTMENT OF HEALTH AND HUMAN SERVICES

FOOD AND DRUG ADMINISTRATION

[DOCKET NO. _____]

VISX, INC.; PREMARKET APPROVAL OF VISX Excimer Laser System Models "B" and "C" for Photorefractive Keratectomy (PRK)

AGENCY: Food and Drug Administration, HHS.

ACTION: Notice.

SUMMARY: The Food and Drug Administration (FDA) is announcing its approval of the application by VISX, Inc., Santa Clara, CA, for premarket approval, under section 515 of the Federal Food, Drug, and Cosmetic Act (the act), of the VISX Excimer Laser System Models "B" and "C" for Photorefractive Keratectomy (PRK). After reviewing the recommendation of the Ophthalmic Devices Panel, FDA's Center for Devices and Radiological Health (CDRH) notified the applicant, by letter on March 27, 1996, of the approval of the application.

DATE: Petitions for administrative review by (insert date 30 days after date of publication in the FEDERAL REGISTER).

ADDRESSES: Written requests for copies of the summary of safety and effectiveness data and petitions for administrative review, and comments to the Dockets Management Branch (HFA-305), Food and Drug Administration, 12420 Parklawn Dr., rm. 1-23, Rockville, MD 20857.

FOR FURTHER INFORMATION CONTACT:

Ms. Jan C. Callaway,

Center for Devices and Radiological Health (HFZ-460),

Food and Drug Administration,

9200 Corporate Blvd.,

Rockville, MD 20850,

301-594-2018.

SUPPLEMENTARY INFORMATION: On June 15, 1996, VISX, Inc., Santa Clara, CA 95051, submitted to CDRH an application for premarket approval of the VISX Excimer Laser System Models "B" and "C". The device is an argon fluoride excimer laser and is indicated for photorefractive keratectomy (PRK) procedures:

- In PRK treatments for the reduction or elimination of mild to moderate myopia (nearsightedness) of between -1.0 to -6.0 diopters spherical equivalent at the corneal plane, in patients with less than or equal to 1.0 diopters of astigmatism.
- In patients with documented evidence of a change in manifest refraction of less than or equal to 0.50 diopters (in both cylinder and sphere components) per year for at least 1 year prior to the date of pre-operative examination.
- In patients who are 18 years of age or older.

On October 20, 1995, the Ophthalmic Devices Panel of the Medical Devices Advisory Committee, an FDA advisory panel, reviewed and recommended conditional approval of the application.

On March 27, 1996, CDRH approved the application by a letter to the applicant from the Director of the Office of Device Evaluation, CDRH.

A summary of the safety and effectiveness data on which CDRH based its approval is on file in the Dockets Management Branch (address above) and is available from that office upon written request. Requests should be identified with the name of the device and the docket number found in brackets in the heading of this document.

Opportunity for Administrative Review

Section 515(d)(3) of the act, (21 U.S.C. 360e(d)(3)) authorizes any interested person to petition, under section 515(g) of the act, for administrative review of CDRH's decision to approve this application. A petitioner may request either a formal hearing under part 12 (21 CFR part 12) of FDA's administrative practices and procedures regulations or a review of the application and CDRH's action by an independent advisory committee of experts. A petition is to be in the form of a petition for reconsideration under 10.33(b) (21 CFR 10.33(b)). A petitioner shall identify the form of review requested (hearing or independent advisory committee) and shall submit with the petition supporting data and information showing that there is a genuine and substantial issue of material fact for resolution through administrative review. After reviewing the petition, FDA will decide whether to grant or deny the petition and will publish a notice of its decision in the FEDERAL REGISTER. If FDA grants the petition, the notice will state the issue to be reviewed, the form of the review to be used, the persons who may participate in the review, the time and place where the review will occur, and other details.

4

Petitioners may, at any time on or before (insert date 30 days after date of publication in the FEDERAL REGISTER), file with the Dockets Management Branch (address above) two copies of each petition and supporting data and information, identified with the name of the device and the docket number found in brackets in the heading of this document. Received petitions may be seen in the office above between 9 a.m. and 4 p.m., Monday through Friday.

This notice is issued under the Federal Food, Drug, and Cosmetic Act (secs. 515(d), 520(h), (21 U.S.C. 360e(d), 360j(h)) and under authority delegated to the Commissioner of Food and Drugs (21 CFR 5.10) and redelegated to the Director, Center for Devices and Radiological Health (21 CFR 5.53).

Dated:_____.

_____

DEPARTMENT OF HEALTH & HUMAN SERVICES - Public Health Service

Food and Drug Administration
9200 Corporate Boulevard
Rockville MD 20850

MAR 27 1996

Ms. Eleanor V. Chiu
Manager, Regulatory Affairs
VISX, Inc.
3400 Central Expressway
Santa Clara, CA 95051

Re: P930016
VISX Excimer Laser System Models "B" and "C" for Photorefractive Keratectomy (PRK)
Filed: June 15, 1993
Amended: March 11, July 18 (2 amendments) and 21 (2 amendments), August 10, 16, and 29, September 2 and 6, October 31, and November 8, 1994; January 17 and 24, February 6, March 20, April 10, May 5, 12, and 30, August 18 and 22, September 18 and 29, October 23 and 24, November 13, and December 15 and 21, 1995; January 5, 18, 26, and 30, February 9, 20, and 22, and March 7, 8, 13, and 27, 1996

Dear Ms. Chiu:

The Center for Devices and Radiological Health (CDRH) of the Food and Drug Administration (FDA) has completed its review of your premarket approval application (PMA) for the VISX Excimer Laser System (Models B and C). This device is indicated for a 6.0 mm ablation zone, myopic photorefractive keratectomy (PRK) in patients who meet all of the following criteria:

1. 1.0 to 6.0 diopters of myopia with astigmatism of $\leq$ 1.0 diopters;

2. refractive change is within $\pm$ 0.5 diopter for one year prior to the laser treatment; and,

3. 18 years of age or older.

We are pleased to inform you that the PMA is approved subject to the conditions described below and in the "Conditions of Approval" (enclosed). You may begin commercial distribution of the device upon receipt of this letter.

The sale, distribution, and use of this device are restricted to prescription use in accordance with 21 CFR 801.109 within the meaning of section 520(e) of the Federal Food, Drug, and Cosmetic Act (the act) under the authority of section 515(d)(1)(B)(ii) of the act. FDA has also determined that to ensure the safe and effective use of the device that the device is further restricted within the meaning of section 520(e) under the authority of section 515(d)(1)(B)(ii), (1) insofar as the labeling specify the requirements that apply to the training of practitioners who may use the device as approved in this order and (2) insofar as the sale, distribution, and use must not violate sections 502(q) and (r) of the act.

These restrictions on the use, labeling, promotion, and advertising of the device are applicable to VISX, Inc., as well as device purchasers and users. VISX must notify the purchasers and users of these restrictions and include them in your training programs.

1. Only practitioners who are experienced in the medical management and surgical treatment of the cornea, and who have been trained in laser refractive surgery including laser system calibration and operation, may use the device as approved in this order.

2. Prospective patients, as soon as they express an interest in myopic PRK and prior to undergoing surgery, must receive from the treatment provider the Patient Information Booklet (as described in your final submission to this PMA).

3. Prospective patients, prior to undergoing surgery, must be informed of the alternatives for correcting their myopia including eyeglasses, contact lenses and other refractive surgeries such as radial keratotomy.

4. Comparison of the safety and effectiveness of this laser with any other method of refractive correction is prohibited. This prohibition is based on the fact that the data submitted for PMA approval of the VISX Excimer Laser System do not compare the clinical outcome of this device with any other method of refractive correction. Such comparisons of safety and effectiveness are misleading and would misbrand your laser in accordance with section 502(a) of the act. All promotion and advertising for this device must include the following information on indications, risks and benefits:

   a. Approval is for the VISX, Inc. application for the VISX Excimer Laser System (Models B and C) to correct mild to moderate nearsightedness (-1.0 to -6.0 diopters when concomitant astigmatism is no greater than 1.0 diopter) in a procedure called photorefractive keratectomy (PRK) using an excimer laser that emits light at a wavelength of 193nm.

   b. PRK is an elective procedure with the alternatives including eyeglasses, contact lenses or radial keratotomy.

   c. Approval of the application is based on clinical trials of 480 eyes treated at 6 mm and followed for two years together with safety information on more than 1600 eyes through 3 years of follow up.

   d. The studies using the 6 mm treatment zone found that of the 480 eyes with at least 2 years of follow up, 94% were corrected to 20/40 or better, and 58% were corrected to 20/20 or better without spectacles or contact lenses. In 42 of 480 eyes (9%), the best vision that could be achieved with spectacles declined by more than 1 line from preop; none was worse than 20/40.

e. These clinical trials showed the following transient complications: pain (24-48 hrs), foreign body sensation, tearing, photophobia, redness, itching/scratchiness, burning, dryness, headache, blurred vision, corneal swelling and pupil enlargement. These problems lasted up to several weeks.

f. The clinical trials using the 6 mm treatment zone showed that the following adverse events occurred in at least 1.0% of the patients at two years post-treatment: overcorrection > 1 diopter (1.0%); pre-treatment Best Spectacle Corrected Visual Acuity (BSCVA) of 20/20 or better with post-treatment BSCVA worse than 20/25 (1.3%); double vision (1.3%); sensitivity to bright lights (1.7%); increase in refractive cylinder ≥ 1 diopter (2.9%); difficulty with night vision (3.1%); and intraocular pressure (IOP) increase of > 5 mm Hg (3.6%).

g. Long term risks of PRK beyond 3 years have not been studied.

h. The applicant is being required to continue following patients in the clinical trials to evaluate the long-term stability of vision and associated risks. The applicant will conduct a study to determine the incidence of adverse events less than 1.0% and to evaluate losses in contrast sensitivity.

i. This laser is not indicated to correct high myopia (nearsightedness > -6.0 D), astigmatism, or farsightedness. Also, it is not indicated to correct nearsightedness of less than -6.0 D if the accompanying astigmatism is > 1.0 D. It is not to be used in procedures other than PRK as described in the approved Operator's Manual.

j. Note that the complete name for this ophthalmic laser is "VISX Excimer Laser (Models B and C) for Photorefractive Keratectomy (PRK) for the Correction of Mild to Moderate Myopia (-1.0 D to -6.0) with Low Astigmatism (≤1.0 D)". Two acceptable versions of this official name are: "PRK laser correction of low myopia" and "PRK laser correction of low nearsightedness". The word excimer, ultraviolet, or UV may be used instead of PRK. Also, these names do not have to contain the qualifiers mild to moderate (-1.0 D to -6.0 D) or low astigmatism (≤1.0 D) if the adjacent text provides this information. Names other than those appearing above require approval in a PMA supplement.

In addition to the postapproval requirements in the Enclosure, the following information must also be submitted to the Agency:

1. protocols (to be submitted in the form of a PMA supplement within 45 days of receipt of this letter) and interim progress reports for low adverse event rate and contrast sensitivity studies described in the FDA approvable letter dated November 17, 1995 (Items B.1. and B.2.);

2. in your annual report, the data specified in items C.1. (additional follow-ups on premarket study subjects), C.3. (unscheduled maintenance visits), and C.4. (assessment of complication rates) of the FDA approvable letter; when reporting each unscheduled maintenance visit, please include the data from the PMMA calibrations performed in the 6 weeks prior to the visit; and,

3. reports to FDA CDRH's Office of Compliance at the address below of any instances of device tampering or usage outside of the approved indication, and any excimer systems that were exported under an 801(e) order and are now back in the U.S.

OC/Division of Enforcement (HFZ-331)
Center for Devices and Radiological Health
Food and Drug Administration
2098 Oakgrove Drive
Rockville, Maryland 20850

Please note that long-term data must be reflected in the labeling (via a supplement to the PMA) when the additional follow-ups and/or postapproval studies are completed.

CDRH will publish a notice of its decision to approve your PMA in the FEDERAL REGISTER. The notice will state that a summary of the safety and effectiveness data upon which the approval is based is available to the public upon request. Within 30 days of publication of the notice of approval in the FEDERAL REGISTER, any interested person may seek review of this decision by requesting an opportunity for administrative review, either through a hearing or review by an independent advisory committee, under section 515(g) of the act.

Failure to comply with the conditions of approval invalidates this approval order. Commercial distribution of a device that is not in compliance with these conditions is a violation of the act.

You are reminded that as soon as possible, and <u>before</u> commercial distribution of your device, that you must submit an amendment to this PMA submission with copies of all approved labeling in final printed form.

4

All required documents should be submitted in triplicate, unless otherwise specified, to the address below and should reference the above PMA number to facilitate processing.

PMA Document Mail Center (HFZ-401)
Center for Devices and Radiological Health
Food and Drug Administration
9200 Corporate Blvd.
Rockville, Maryland 20850

If you have any questions concerning this approval order, please contact Ms. Jan C. Callaway at (301) 594-2018.

Sincerely yours,

Susan Alpert, Ph.D., M.D.
Director
Office of Device Evaluation
Center for Devices and
Radiological Health

Enclosure

Issued:5-2-95

CONDITIONS OF APPROVAL

APPROVED LABELING. As soon as possible, and before commercial distribution of your device, submit three copies of an amendment to this PMA submission with copies of all approved labeling in final printed form to the PMA Document Mail Center (HFZ-401), Center for Devices and Radiological Health, Food and Drug Administration (FDA), 9200 Corporate Blvd., Rockville, Maryland 20850.

ADVERTISEMENT. No advertisement or other descriptive printed material issued by the applicant or private label distributor with respect to this device shall recommend or imply that the device may be used for any use that is not included in the FDA approved labeling for the device. If the FDA approval order has restricted the sale, distribution and use of the device to prescription use in accordance with 21 CFR 801.109 and specified that this restriction is being imposed in accordance with the provisions of section 520(e) of the act under the authority of section 515(d)(1)(B)(ii) of the act, all advertisements and other descriptive printed material issued by the applicant or distributor with respect to the device shall include a brief statement of the intended uses of the device and relevant warnings, precautions, side effects and contraindications.

PREMARKET APPROVAL APPLICATION (PMA) SUPPLEMENT. Before making any change affecting the safety or effectiveness of the device, submit a PMA supplement for review and approval by FDA unless the change is of a type for which a "Special PMA Supplement-Changes Being Effected" is permitted under 21 CFR 814.39(d) or an alternate submission is permitted in accordance with 21 CFR 814.39(e). A PMA supplement or alternate submission shall comply with applicable requirements under 21 CFR 814.39 of the final rule for Premarket Approval of Medical Devices.

All situations which require a PMA supplement cannot be briefly summarized, please consult the PMA regulation for further guidance. The guidance provided below is only for several key instances.

A PMA supplement must be submitted when unanticipated adverse effects, increases in the incidence of anticipated adverse effects, or device failures necessitate a labeling, manufacturing, or device modification.

A PMA supplement must be submitted if the device is to be modified and the modified device should be subjected to animal or laboratory or clinical testing designed to determine if the modified device remains safe and effective.

A "Special PMA Supplement - Changes Being Effected" is limited to the labeling, quality control and manufacturing process changes specified under 21 CFR 814.39(d)(2). It allows for the **addition** of, but **not the replacement** of previously approved, quality control specifications and test methods. These changes may be implemented before FDA approval upon acknowledgment by FDA that the submission is being processed as a "Special PMA Supplement - Changes Being Effected." This acknowledgment is in addition to that issued by the PMA Document Mail Center for all PMA supplements submitted. **This procedure is not applicable to changes in device design, composition, specifications, circuitry, software or energy source.**

Alternate submissions permitted under 21 CFR 814.39(e) apply to changes that otherwise require approval of a PMA supplement before implementation of the change and include the use of a 30-day PMA supplement or annual postapproval report. FDA must have previously indicated in an advisory opinion to the affected industry or in correspondence with the applicant that the alternate submission is permitted for the change. Before such can occur, FDA and the PMA applicant(s) involved must agree upon any needed testing protocol, test results, reporting format, information to be reported, and the alternate submission to be used.

POSTAPPROVAL REPORTS. Continued approval of this PMA is contingent upon the submission of postapproval reports required under 21 CFR 814.84 at intervals of 1 year from the date of approval of the original PMA. Postapproval reports for supplements approved under the original PMA, if applicable, are to be included in the next and subsequent annual reports for the original PMA unless specified otherwise in the approval order for the PMA supplement. Two copies identified as "Annual Report" and bearing the applicable PMA reference number are to be submitted to the PMA Document Mail Center (HFZ-401), Center for Devices and Radiological Health, Food and Drug Administration, 9200 Corporate Blvd., Rockville, Maryland 20850. The postapproval report shall indicate the beginning and ending date of the period covered by the report and shall include the following information required by 21 CFR 814.84:

(1) Identification of changes described in 21 CFR 814.39(a) and changes required to be reported to FDA under 21 CFR 814.39(b).

(2) Bibliography and summary of the following information not previously submitted as part of the PMA and that is known to or reasonably should be known to the applicant:

(a) unpublished reports of data from any clinical investigations or nonclinical laboratory studies involving the device or related devices ("related" devices include devices which are the same or substantially similar to the applicant's device); and

(b) reports in the scientific literature concerning the device.

If, after reviewing the bibliography and summary, FDA concludes that agency review of one or more of the above reports is required, the applicant shall submit two copies of each identified report when so notified by FDA.

ADVERSE REACTION AND DEVICE DEFECT REPORTING. As provided by 21 CFR 814.82(a)(9), FDA has determined that in order to provide continued reasonable assurance of the safety and effectiveness of the device, the applicant shall submit 3 copies of a written report identified, as applicable, as an "Adverse Reaction Report" or "Device Defect Report" to the PMA Document Mail Center (HFZ-401), Center for Devices and Radiological Health, Food and Drug Administration, 9200 Corporate Blvd., Rockville, Maryland 20850 within 10 days after the applicant receives or has knowledge of information concerning:

(1) A mixup of the device or its labeling with another article.

(2) Any adverse reaction, side effect, injury, toxicity, or sensitivity reaction that is attributable to the device and

(a) has not been addressed by the device's labeling or

(b) has been addressed by the device's labeling, but is occurring with unexpected severity or frequency.

(3) Any significant chemical, physical or other change or deterioration in the device or any failure of the device to meet the specifications established in the approved PMA that could not cause or contribute to death or serious injury but are not correctable by adjustments or other maintenance procedures described in the approved labeling. The report shall include a discussion of the applicant's assessment of the change, deterioration or failure and any proposed or implemented corrective action by the applicant. When such events are correctable by adjustments or other maintenance procedures described in the approved labeling, all such events known to the applicant shall be included in the Annual Report described under "Postapproval Reports" above unless specified otherwise in the conditions of approval to this PMA. This postapproval report shall appropriately categorize these events and include the number of reported and otherwise known instances of each category during the reporting period. Additional information regarding the events discussed above shall be submitted by the applicant when determined by FDA to be necessary to provide continued reasonable assurance of the safety and effectiveness of the device for its intended use.

REPORTING UNDER THE MEDICAL DEVICE REPORTING (MDR) REGULATION. The Medical Device Reporting (MDR) Regulation became effective on December 13, 1984, and requires that all manufacturers and importers of medical devices, including in vitro diagnostic devices, report to FDA whenever they receive or otherwise became aware of information that reasonably suggests that one of its marketed devices

(1) may have caused or contributed to a death or serious injury or

(2) has malfunctioned and that the device or any other device marketed by the manufacturer or importer would be likely to cause or contribute to a death or serious injury if the malfunction were to recur.

The same events subject to reporting under the MDR Regulation may also be subject to the above "Adverse Reaction and Device Defect Reporting" requirements in the "Conditions of Approval" for this PMA. FDA has determined that such duplicative reporting is unnecessary. Whenever an event involving a device is subject to reporting under both the MDR Regulation and the "Conditions of Approval" for this PMA, you shall submit the appropriate reports required by the MDR Regulation and identified with the PMA reference number to the following office:

Division of Surveillance Systems (HFZ-531)
Center for Devices and Radiological Health
Food and Drug Administration
1350 Piccard Drive, Room 240
Rockville, Maryland 20850
Telephone (301) 594-2735

Events included in periodic reports to the PMA that have also been reported under the MDR Regulation must be so identified in the periodic report to the PMA to prevent duplicative entry into FDA information systems.

Copies of the MDR Regulation and an FDA publication entitled, "An Overview of the Medical Device Reporting Regulation," are available by written request to the address below or by telephoning 1-800-638-2041.

Division of Small Manufacturers Assistance (HFZ-220)
Center for Devices and Radiological Health
Food and Drug Administration
5600 Fishers Lane
Rockville, Maryland 20857

SUMMARY OF SAFETY AND EFFECTIVENESS

I. GENERAL INFORMATION

Device Generic Name:	Ophthalmic Medical Laser System (193 nanometer laser wavelength)
Device Trade Name:	VISX Excimer Laser Systems, Model B and Model C ("STAR")
Applicant's Name and Address:	VISX, Incorporated 3400 Central Expressway Santa Clara, CA 95051-0703 (408) 733-2020
Date of Panel Recommendation:	Approval with Conditions on October 20, 1995

Premarket Approval (PMA) Application Number: P930016

Date of Notice of Approval to Applicant: March 27, 1996.

II. INDICATIONS FOR USE

The Photorefractive Keratectomy (PRK) procedure using the VISX Excimer Laser System is intended for use:

- In PRK treatments for the reduction or elimination of mild to moderate myopia (nearsightedness) of between -1.0 to -6.0 D, spherical equivalent at the corneal plane, in patients with less than or equal to 1.0 D of astigmatism.
- In patients with documented evidence of a change in manifest refraction of less than or equal to 0.50 D (in both cylinder and sphere components) per year for at least 1 year prior to the date of pre-operative examination.
- In patients who are 18 years of age or older.

III. CONTRAINDICATIONS, WARNINGS AND PRECAUTIONS

A. Contraindications:

PRK surgery should not be performed:

- In patients with collagen vascular, autoimmune or immunodeficiency diseases.
- In pregnant or nursing women.
- In patients with signs of keratoconus.
- In patients with a history of keloid formation.
- In patients who are taking one or both of the following medications:
  - - amiodarone hydrochloride (Cordarone)
  - - isotretinoin (Accutane)

B. Warnings:

- Patients whose myopia is progressing at a rate greater than 0.5D per year should not have the PRK procedure.
- The decision to perform PRK surgery in patients with systemic disease likely to affect wound healing, such as connective tissue disease, diabetes, severe atopic disease or an immunocompromised status, should be approached cautiously. The safety and effectiveness of the VISX Excimer Laser System has not been established in patients with these conditions.
- PRK is not recommended in patients with *Herpes simplex* or *Herpes zoster*.

C. Precautions:

General

The safety and effectiveness of the VISX Excimer Laser System have not been established:

- In patients with progressive myopia, ocular disease, corneal abnormality, previous corneal surgery or trauma in the ablation zone.

- In patients with corneal neovascularization within 1.0 mm of the ablation zone.

- In patients under 18 years of age.

- Over the long term (more than 3 years after surgery).

Although the effects of PRK on visual performance under poor lighting conditions have not been determined, it is impossible that you will find it more difficult than usual to see in conditions such as very dim light, rain, snow, fog or glare from bright lights at night.

Patient Selection

Consideration should be given to the following in determining the appropriate patients for PRK:

- Complete examination, including, but not limited to, cycloplegic evaluation, must be performed. The lens must be evaluated, especially in the older patient, to assure that nuclear sclerosis or any other lens opacity is not present prior to laser surgery. Myopic patients will have a higher incidence of retinal pathology, and indirect ophthalmoscopy through a dilated pupil is essential.

- To obtain accurate refractive information, contact lens wearers must be examined after a period of abstinence from contact lens use for at least 2 weeks for soft lenses and at least 3 weeks for rigid gas permeable or hard (PMMA) lenses. Prior to treatment patients must have 3 central keratometry readings and manifest refractions taken at 1 week intervals, the last 2 of which must not differ by more than 0.50 diopter in either meridian. All mires must be regular. Any patient with keratometry or a clinical picture which is suggestive of keratoconus is specifically contraindicated as described above.

- Glaucoma is more common in myopic patients than in the general population. Evaluation of the optic nerve and measurement of the intraocular pressure are necessary. If there are any concerns regarding the appearance of the optic nerve, a Humphrey 24-2 Fastpac or equivalent threshold test of the visual field should be performed. If elevated intraocular pressure and/or evidence of glaucomatous damage

are found, topical steroids should only be used with careful medical supervision or the patient should not undergo PRK surgery.

- Pre-operative corneal mapping is essential on all patients to exclude topographical abnormalities. This is especially important when astigmatism or steep keratometry readings are present, which may indicate the presence of keratoconus or other irregularities.

- Baseline evaluation of patients requesting refractive surgery should be performed within 30 days of the PRK surgery.

- The patient should have the ability to tolerate local or topical anesthesia.

- The patient should have the ability to lie flat without difficulty.

- The patient should be able to fixate steadily and accurately for the duration of the PRK procedure.

- The patient must be able to understand and give an informed consent.

- In patients who have been clearly informed of all alternatives for the correction of their myopia including but not limited to spectacles, contact lenses and other refractive surgeries such as radial keratotomy.

IV. DEVICE DESCRIPTION

The VISX Excimer Laser System is available in two models: B and C. Although the Model C is a technological upgrade of the Model B, the energy output and the delivery mechanism from both models remains the same.

Each model combines a 193 nm laser with a computer-controlled optics system. Srinivasan was the first to describe the unique non-thermal chemical bond breaking properties of the newly developed excimer lasers.[1] He pointed out the potential of the 193 nm laser for sculpting organic materials and with Trokel and Braren applied this new technology to ophthalmic surgery, specifically to the cornea in 1983.[2]

The excimer laser system produces its surgical effect by ablative photodecomposition. Short, intense pulses of laser energy allow precise control of the depth of the corneal incision. The clinical application is used for reshaping the cornea for a variety of refractive corrections. This procedure is known as Photorefractive Keratectomy, and is the subject of this PMA.

A. The Excimer Laser System consists of the following components:

1. Excimer Laser:

Laser wavelength:	193 nanometers
Laser pulse duration:	20 nanoseconds (FWHM)
Repetition rate:	5 Hertz
Fluence :	160 mJ/cm^2
PRK ablation zone:	6 mm diameter

Composition of gases:

ArF Premix	Argon Fluorine (< 1.0%) Helium Neon
For internal purging:	Helium (99.9995% purity)
For purifying (Model B):	Liquid Nitrogen

2. Gas Management System: This system includes the housing for gas cylinders, a gas alarm for fluorine, a gas discharge system that uses an activated charcoal filter to ensure that no fluorine is exhausted into the atmosphere, and an emergency safety system that automatically seals the ArF Premix cylinder in the event of a natural disaster or power failure.

3. Laser Beam Delivery System: Before reaching the eye, the raw rectangular beam of an excimer laser is directed by mirrors to pass sequentially through homogenizing optics that convert the raw beam into a uniform and coaxial profile beam; a spatial and temporal integrator that minimizes variations in the average treatment beam profile; and a beam-shaping module (iris diaphragm and rotatable slit blades) that controls the size and shape of the exiting beam.

4. Patient Management System: Components under this category include an operating microscope that allows the physician to view the eye; a halogen illuminator that illuminates the patient's eye; a blinking fixation LED upon which the patient focuses during the procedure; a reticle for aligning the eye to the system; a patient chair and a vacuum

pillow; and a video camera and monitor for recording and viewing a procedure.

5. Computer Control and Software System: Provided with the laser is an IBM or equivalent PC system that contains a monitor, a keyboard, a trackball, and a printer. The PC drives the excimer system's components, calculates ablation algorithms, and prompts the user through the surgical procedure. Additionally, the PC is equipped with the VISX VisionKey optical memory cards. Each card stores patient information and treatment data, provides standardization of ablations, and controls treatment selection.

   The VisionKey cards available to U.S. users will allow only PRK myopia treatment from -1.0 to -6.0 diopters, and 6 mm ablation diameter.

B. Regulations

The Excimer System contains a Class IV laser that conforms with US/FDA 21 CFR 1040.10 and 1040.11 Radiological Health requirements. The laser system was designed to meet the following safety standards:

UL544
CSA C22.2 No. 125M1984
IEC 601-1: 1988
IEC 601-2-22P: 1991
IEC 825: 1984
EN 60601-1-2
EN 55011
IEC 801-2,3,4,5

V. ALTERNATIVE PRACTICES OR PROCEDURES

Conventional methods in correcting nearsightedness are: spectacles, contact lenses or refractive surgery

VI. MARKETING HISTORY

VISX has over 200 Excimer Systems located in approximately 35 countries. The VISX Excimer System has not been withdrawn from any country or market for reasons of safety or effectiveness.

VII. ADVERSE EFFECTS OF THE DEVICE ON HEALTH

Potential adverse reactions associated with PRK include: loss of best spectacle corrected visual acuity, overcorrection, increase in refractive cylinder, abnormal glare, double vision, sensitivity to bright lights, difficulty with night vision, increase in intraocular pressure, corneal haze, corneal infection/ulcer/infiltrate, corneal decompensation/edema, lens abnormality and secondary surgical intervention.

VIII. SUMMARY OF PRECLINICAL STUDIES

A. Laboratory Studies

1. Beam Rotator Test

The objective of the beam rotator test was to determine the effect of beam rotation on PMMA ablations. The test involved ablating samples of PMMA plastic with the VISX Excimer Laser System set at 160 mJ/cm^2, 6 mm iris, and 300 pulses. Samples were ablated, at the iris plane, to a 50 μm depth with the beam rotator rotating normally, and with the rotator stopped. The samples were then examined with a phase contrast microscope to assess any changes in surface smoothness.

Visual and phase contrast microscope examination of the PMMA samples consistently showed significant linear ridges on the samples ablated with the beam rotator stopped. The samples of PMMA that were ablated with the beam rotator rotating normally had a surface that was consistently smoother, with no striations or ridges. The absence of linear ridges or striations in the samples ablated with normal beam rotation suggested that the beam rotator was in fact acting as a temporal integrator and contributed significantly to the smoothness of the ablated surface.

2. Reliability Testing of the Model B and Model C Lasers

a. Laser Module

A modified (external cooled) laser module was fired continuously until breakdown, repaired when necessary, and then fired until 97 million shots were delivered (estimated to be 24 years of maximum service given that in very heavy use, the laser would be used to treat no more than 4,000 eyes per year or deliver less than 4 million shots per year). When

21

components failed, they were redesigned, if possible, to increase their longevity. Based on these tests, the following factory service intervals were determined: (1) the laser chamber dust filter needs to be cleaned or replaced every 15 to 20 million shots, and (2) the optics need to be cleaned at least every 7 million shots, and its service life is about 20 million shots.

b. Integrator

The Beam Integrator Module performs the function of temporal and spatial beam integration. It is operating only during the time of actual laser light delivery. Two integrators were tested. Each was run for 720 continuous hours with no discernible wear or failure. Life expectancy of the Beam Integrator should exceed 15,000 patient treatments.

c. Shutters

There are three shutters in the optics delivery system. The first two shutters are actuated with every ablation, including calibration, and the third shutter is opened after the treatment beam calibration. During this test, all shutters were cycled at one-second intervals for 106 continuous hours. At the conclusion of the test, the shutters were examined for wear. Based on the results of this test, the life expectancy of the shutter assemblies should exceed 150,000 patients.

d. Beam Shaping Module

The Beam Shaping Module uses three different mechanisms to control the shape of the laser beam (iris drive, slit drive, and axis drive). In this test, all functions of the three Beam Shaping Module mechanisms were cycled respectively through full motion. At the conclusion of the test, the mechanism was disassembled and inspected for wear. The iris and slit drives were run continuously for 60 hours each. The axis drive was run for 50 hours. Life expectancy of the Beam Integrator Module was estimated to exceed 250,000 patient treatments.

3. Software Validation

a. Model B Software (V 4.10)

V 4.10 is the current version of the software in Model B. This software underwent a comprehensive set of tests which exercised boundary conditions, extreme values, and nominal data entry fields. Also included were extensive tests for system calibration, safety interlocks, and motor movement. Ablations were created and tested for accuracy in a number of different ways. No critical faults were identified during the testing. These tests verified the software requirements for the product as well as specific unit functions.

b. Model C Software (V 1.00 and V 1.01)

Two software test procedures were performed for V 1.00. The first was a complete test, including all ablations tests (similar to that done for Model B). The second was an abbreviated test, with only selected ablation tests. The tests were performed on different Model C units. The purpose of performing two tests was to determine whether there were any machine-dependent software problems. None were identified. During a field test of the Model C, a problem in the calculation of the astigmatism angle was identified. V 1.01 was prepared to correct this problem and it was subjected to a test which focused on this parameter. No faults were identified in this test. V 1.01 is the current version of the software in Model C.

4. Comparability Testing of Model B and Model C

The following parameters were tested: (1) raw laser beam profiles, (2) laser temporal pulse width, (3) system beam uniformity, and (4) comparable plastic ablations. Measurements were made on the beams from three Model B and three Model C lasers, and from three Model B and three Model C finished systems. Each unit was evaluated five times for each specific parameter. The resulting data were subjected to an Analysis of Variance to test for differences between the Models. Unit to unit variation was greater in Model B. There were no significant differences ($p<0.05$) in the above parameters between the two Models.

B. Animal Studies

1. Autorefractor Scans of Ablated Animal Eyes

a. Objective

The objective of this test was to determine if a modified autorefractor could be used to measure the refractive change in an animal cornea after excimer laser ablation.

b. Test

The shape of the cornea of an animal eye was changed with an Excimer Laser System, and an attempt was made to measure the refractive change using a modified autorefractor.

c. Test Set-up

A CooperVision, Inc. Dioptron IV autorefractor was modified so that an analog signal representing focal quality was available. Single eyes of 5 albino rabbits were ablated with an attempted -3 diopter ablation with a VISX Excimer Laser System prototype (Twenty/Twenty Model A). Single eyes of 3 African green monkeys were ablated with an attempted -6 diopter correction. Measurements of the eyes were made pre- and post-operatively. The eyes were aligned to the autorefractor, and focal scans were made. The autorefractor output consisted of a graph of focal quality vs. scan position. The position at which the focal quality was the highest represented the dioptric power of the eye.

d. Results

For the rabbit eyes, the post-op focal peak minus the pre-op focal peak showed 1.5 diopters of flattening, which was 50% of the targeted correction. For the monkey eyes, the post-op minus pre-op scans showed 3.5 diopters of flattening, which was 58% of the targeted correction. The eyes were scanned multiple times, with repeatable results within +/- 0.2 diopters in most cases.

e. Conclusion

The autorefractor was able to measure a refractive change in the eye. The differences in the achieved vs. targeted results were probably due to an overestimation of how much tissue was removed for each laser pulse. The excimer laser was able to flatten the eyes by about 50% of the targeted amount.

2. Effect of Excimer Laser on Keratocytes

a. Objective

The study was designed to test whether exposure to the radiation from the excimer laser resulted in the oncogenic transformation of cornea cells.

b. Test

Cultured keratocytes and whole corneas from rats were exposed to excimer laser radiation. Following exposure, the growth patterns of cultured cells were monitored. Cultured cells and exposed corneas (30 corneas at 80 mJ/cm^2 , 30 at 160 mJ/cm^2 and 30 not exposed) were also implanted subcutaneously in the rats to assess potential tumor growth.

c. Test Set-up

Keratocytes and corneas were exposed at 80 and 160 mJ/cm^2 fluence, and at a repetition rate of 5 Hz.

d. Results

No effects on cultured cell growth patterns were observed. No tumors were induced following subcutaneous implantation of laser-exposed cells or corneas. As a positive control, treatment of keratocytes with a known carcinogen did result in altered cell growth, and an incidence of tumors in the implanted rats.

e. Conclusions

Exposed cells appear to be either killed by laser exposure, or are unaltered. There is no evidence of oncogenic transformation.

f.. Publication

Gebhardt, et al., Effect of excimer laser energy on the growth potential of corneal keratocytes. *Cornea* 9(3):205-210, 1990.

3. Effect of Nitrogen Blowing on Corneal Smoothness

a. Objective

To test the effect of blowing nitrogen gas across the cornea during ablation on corneal smoothness.

b. Test

Scanning and transmission electron microscopy were used to evaluate corneal smoothness after excimer laser photo ablation of bovine corneas.

c. Test Set-up

Fifty-seven fresh bovine corneas obtained from a local abattoir were ablated with a VISX Model B (formerly Twenty/Twenty) Excimer Laser using clinical laser settings. Varying amounts of nitrogen were blown across the corneas (0 to 20 SCFH), and one group of eyes was ablated with hydrated nitrogen (90% relative humidity) blown across the cornea.

d. Results

Corneas ablated with dry nitrogen during the ablation process were rougher than those which were not blown or were blown with moist nitrogen. The corneas blown with dry nitrogen had a jagged ablated surface by transmission microscopy. The roughness increased with ablation depth, and the undulations were about 20% of the ablation depth. Corneas blown with moist nitrogen were indistinguishable from those which were not blown.

e. Conclusion

Blowing dry nitrogen across the corneal surface during excimer laser photo ablation increases surface roughness.

4. Effect of Nitrogen Blowing on Corneal Ablation Rates

a. Objective

To determine the effect of hydration on corneal ablation rates.

b. Test

Ablation rates were determined using corneal perforation for corneas ablated with dry nitrogen, moist nitrogen, and no-blown nitrogen.

c. Test Set-up

Twelve fresh bovine corneas obtained from a local abattoir were ablated with a VISX Model B (formerly Twenty/Twenty) Excimer Laser using clinical laser settings. Varying amounts of nitrogen were blown across the corneas (0 to 20 SCFH), and one group of eyes was ablated with hydrated nitrogen (90% relative humidity) blown across the cornea. By determining the thickness of a cornea using an ultrasonic pachymeter and counting the number of pulses used to perforate the cornea, the average ablation rate of corneal tissue could be determined.

d. Results

Corneal ablation rates for corneas which were not blown with nitrogen or blown with moist nitrogen had ablation rates of 0.27 μm/pulse, while those ablated with dry nitrogen blowing at 20 SCFH had ablation rates of 0.5 μm/pulse.

e. Conclusion

Blowing dry nitrogen across the corneal surface during excimer laser photo ablation increases ablation rates.

5. Effluent Removal Measurements

a. Objective

The measurements were performed to determine whether the effluent removal system of the VISX Excimer Laser System fully removed debris caused by ablation during the time between laser pulses, and to determine the optimal settings for the effluent removal system.

b. Test

A video camera was used to record the images of 30 bovine corneas during excimer laser ablation. Single-frame viewing of the tape demonstrated the effectiveness of the ablation removal.

c. Test Set-up

The eye was illuminated from the side, so light scattered by the effluent could be viewed against a black background. The Excimer Laser System was operated at 6 Hz, ablating bovine eyes with constant diameter treatments. The video camera recorded images at 30 frames per second. The effluent removal system was operated at various settings from off up to the maximum.

d. Results

There is a rapidly ejected component of the effluent in addition to a hovering, cloud-like component of the effluent. The rapidly ejected component is completely removed within about 100 msec using any setting from one to ten of the effluent removal system, with a fresh filter and the nozzle in its standard position. The hovering component is not removed at any setting of the effluent removal system unless the nozzle is moved very close to the eye. This component can be blown away with an extremely gentle flow across the eye, suggesting

that the effluent removal system does not cause much airflow across the eye.

e. Conclusions

For removal of the rapidly ejected effluent component, a mid-range setting of the effluent removal system is optimal. Higher settings have no advantage in removal, and lower settings may be inadequate once some clogging of the filter has occurred. The system does not remove the hovering component at any setting.

6. Profilometry of Corneal Ablations

a. Objective

To determine the shape of corneal ablations at different diameters and ablation depths using an excimer laser beam with a uniform irradiance profile.

b. Test

Ablation shapes of various diameters and depths in porcine corneas were measured with a custom optical profilometer.

c. Test Set-up

Sixteen fresh porcine corneas obtained from a local abattoir were ablated with a VISX Model B (formerly Twenty/Twenty) Excimer Laser using clinical laser settings. Prior to ablating tissue, the laser was tested to ensure a uniform laser beam profile by measuring ablations in plastic. Subtracting post from pre ablation corneal elevations as determined by video images provided a measure of ablation shape. Ablations at depths of 10, 20, 40 and 80 μm and a diameter of 6 mm were measured. Also, -6 diopters PRK ablations of varying diameter were measured.

d. Results

The ablated corneas consistently showed ablation rates which were greater peripherally than centrally. This effect was more pronounced at large diameters. When measured at different

intended ablation depths, the present variation in ablation rates relative to the intended ablation was the same.

e. Conclusion

Even with a uniform laser beam profile, the cornea does not ablate evenly. This effect is dependent upon the ablation diameter and does not change significantly with ablation depth.

f. Publication

Shimmick et al., Cornea Ablation Profilometry and Factors Associated with Central Island Formation, *Invest Ophthalmic & Vis Sci*, March 15, 1995, 36(4), p. S1.

7. Corneal Healing Following Laser Refractive Keratectomy

a. Objective

To study the effect of edge profile and wound depth on reepithelialization and stromal healing.

b. Test

Ablated rabbit corneas are evaluated for reepithelialization and clarity.

c. Test Set-up

A 193 nm excimer laser system was used to ablate 4.5-mm optically contoured zones in the corneal stroma of rabbits to achieve optical flattening of 2, 4, 8, and 16 diopters. Dichlorotriazinyl aminofluorescein, a vital dye that covalently binds the stromal bed and delineates the boundaries of new collagen synthesis, was placed in each eye post surgery.

d. Results

All the corneas reepithelialized; no subsequent recurrent erosions occurred. All seven corneas that received an ablation of less than 50 μm were clear centrally at 8 weeks. No evidence of new collagen formation or epithelial hyperplasia was found in any of these seven corneas. At an ablation depth

of approximately 100 μm, opacification and scarring were observed biomicroscopically and histopathologically in two specimens. Stromal remodeling was observed in the two corneas that exhibited scarring.

e. Conclusion

For ablations that are less than 50μm, no scarring, collagen regrowth, or epithelial hyperplasia was observed.

f. Publication

Good GL, et al., Corneal healing following laser refractive keratectomy. *Arch Ophthal* 107:1799-1803, 1989.

8. One-Year Refractive Results of Central Photorefractive Keratectomy for Myopia in the Non-Human Primate Cornea

a. Objective

To determine the effects of PRK on nonhuman primate corneas.

b. Test

Predictability, stability and complications are evaluated.

c. Test Set-up

Thirty-two eyes of 16 adult green monkeys underwent myopic PRK. Each eye was randomly assigned to receive either a 42 pulse ablation (1.5 D flattening) or a 84 pulse ablation (3 D flattening). Eight monkeys were chosen randomly to receive mechanical debridement while the other eight had laser removal of the epithelium.

d. Results

The corneas healed satisfactorily, with normal formation of basal lamina and hemidesmosomal attachments visible in 14-week histologic specimens. No recurrent erosions were observed clinically. After a transient period of faint haze, all corneas were clear at 17 weeks and remined clear through the

1-year follow-up. In terms of accuracy, all corneas demonstrated a significant flatttening compared with preoperative values, but no significant difference was seen between the groups with different intended corrections (1.5 and 3 diopters). The changes in corneal shape stabilized by 17 weeks, as measured by keratometry. The clinical results suggest that mechanical removal of the epithelium is preferable to laser ablation of the epithelium.

e. Conclusion

The results suggest that excimer laser ablation of the corneal stroma can produce a stable dioptric change in the primate cornea with good healing and long-term corneal clarity.

f. Publication

McDonald MB, et al., One year refractive results of central photorefractive keratectomy for myopia in the nonhuman primate cornea. *Arch Ophthal.* 108:40-47, 1990.

C. Additional Studies--Electrical Safety and Electromagnetic Compatibility Testing

1. Model B tested by Technischer Überwachungs Verein (TÜV) Rheinland of North America, Inc.and CKC Laboratories, Inc. and found to be in compliance with:

IEC 601-1 (1977)
IEC 601-1 (1988)
IEC 601-2-22 (1991)
IEC 825 (1984)
VDE Vfg 1046 Class B Requirements

2. Model C tested by TÜV Rheinland of North America, Inc. and found to be in compliance with:

EN 60601-1
EN 60601-1-2
IEC 601-2-22
EN 55011
IEC 801-2,3,4,5

IX. SUMMARY OF CLINICAL STUDIES

A. Study Objectives

The objectives of the multicenter, clinical investigation of the VISX excimer system for PRK, conducted under investigational device exemptions (IDE) application G870181, were to assess the ability of the device to: 1) safely improve uncorrected visual acuity, and 2) to predictably reduce low myopia (up to -6.0 D) in healthy eyes with ≤ 1 D of astigmatism.

B. Study Design

This was a prospective, non-randomized, unmasked multicenter clinical study with the subjects acting as their own controls.

C. Inclusion and Exclusion Criteria

Study subjects were 18 years or older and must have signed an informed consent form. Enrollment occurred if the subject met these conditions: -1 to -6 D of myopia at the corneal plane with little or no astigmatism (≤ 1.0 D), best spectacle corrected visual acuity of 20/40 or better in both eyes, and stable manifest refraction as documented by ≤ 0.5 D change within the previous twelve months. Contact lens wearers had to abstain from contact lens use prior to baseline examination (2 weeks for soft lenses, 3 weeks for hard lenses).

Subjects not meeting the above inclusion criteria were excluded from the study. In addition, subjects who exhibited any of the following conditions were excluded: keratoconus, active ocular disease or corneal abnormality, patent corneal neovascularization within 1 mm of the intended ablation zone, previous corneal surgery or trauma within the intended ablation zone, systemic disease likely to affect wound healing, unstable central keratometry readings with irregularly shaped mires or corneascope photographs with broken central rings, use of systemic medications likely to affect wound healing (e.g., systemic connective tissue disease, diabetes, and severe atopic disease) or immunodeficiency. Pregnant or nursing women were also excluded.

D. Study Plan, Patient Assessments, and Efficacy Criteria

Subjects were evaluated pre-operatively, every 24 to 48 hours post-operatively until re-epithelialization, and at 1, 3, 6, 12, 18 and 24 months post-treatment.

Pre-operatively the subjects' medical and ocular histories were recorded. Post-operatively, subjects were questioned about any visual symptoms and their satisfaction with the procedure. Objective measurements included: uncorrected and best corrected visual acuity, manifest refraction, keratometry, intraocular pressure, pachymetry, clinical assessment of corneal clarity, clinical assessment of anterior chamber, vitreal, retinal and lens status, assessment of complications and adverse reactions.

Additional post-operative evaluations were performed in subsets of subjects as follows: cycloplegic refraction, corneal topography, glare testing, contrast sensitivity, endothelial cell counts and visual fields.
Procedure effectiveness was evaluated based on improvement in uncorrected visual acuity and reduction in mean spherical equivalent refractive error. Device effectiveness was evaluated in terms of the percent of cases experiencing a deviation from intended correction within 1.0 D of the targeted correction The stability of the refractive outcome through the post-operative evaluation period was also assessed.

Statistical analyses were performed at the 0.05 significance level against two-sided alternatives. Descriptive statistics were generally provided on data up to 42 months. For continuous data, changes between time periods were analyzed using appropriate t-tests. For categorical data, differences in proportions between time periods were tested using the McNemar's test, while differences in groups of eyes and/or patients were tested using the Chi-squared test, or Fischer's Exact test.

Data were evaluated using two separate analysis methods: Intent to Treat (post-retreatment data included in analysis), and Last Observed (post-retreatment data excluded from analysis). Key efficacy criteria were evaluated for all eyes.

E. Study Period, Investigational Sites and Demographic Data

1. Study Period

A total of 1749 eyes were treated across 10 participating centers in three phases of the study.

Table 1		
Phase	**Treatment Dates**	**Number of Eyes**
I	6/88 - 10/88 11/88 - 5/89	10 blind eyes/enucleation 10 partially sighted eyes
IIa IIb	6/89 - 8/93 9/90 - 2/94	40 79
III	4/91 - 5/95	1610

Phase I human studies were conducted at Louisiana State University Eye Center. One eye which was scheduled for enucleation was treated on a special FDA exemption, and nine blind eyes were treated under IDE G860006. Subsequently, ten partially sighted eyes were treated under Phase I. One-year follow-up was completed for both the blind eyes and the partially sighted eyes, and the data provided reasonable scientific evidence that the Excimer Laser System is safe when used for corneal area ablation.

Phase IIa of the clinical study began at LSU on June 13, 1989, and was expanded to the University of Missouri-Kansas City Eye Foundation on November 18, 1989. Forty subjects were treated in this series of fully sighted subjects. Data from these subjects provided the basis for continuation of the study to Phase IIb.

Phase IIb began at LSU on September 24, 1990 and was expanded to include a total of five sites. Seventy-five subjects were treated in this series. When four month follow-up was completed on these subjects, a request was made by the sponsor and granted by the FDA to proceed to Phase III. The results of the Phase III study are in this summary.

In the Phase III study, support for the long-term **safety** of PRK with the Excimer Laser was provided by the entire cohort of 1610 eyes which included ablation zones of 5, 5.5 and 6 mm. From this cohort, nine hundred and nine (909) eyes had a 6.0 mm ablation zone. These 909 eyes were treated between May 1992 and May 1995.

Effectiveness analyses were done on the 480 eyes from the 909-eye cohort that had two-year follow-up data. These 480 eyes were treated between May 1992 and October 1993 at nine participating centers. The patients were evaluated pre-operatively, every 24 to 48 hours post-operatively until re-epithelialization, and at 1, 3, 6, 12, 18 and 24 months post-treatment.

2. Investigational Sites

The following table presents the ten sites that participated in the clinical investigation.

Table 2
Distribution of Eyes Treated by Clinical Site

Site	Study Population					
	1610 Eyes (5,5.5,6 mm) (Safety)		909 Eyes (6 mm) (Safety)		480 Eyes (6 mm) (Effectiveness)	
	n	%	n	%	n	%
Dallas Eye Institute	248	15.4	158	17.4	59	12.3
New Jersey Eye Institute	278	17.3	178	19.6	115	24.0
Cedars-Sinai Medical Center	173	10.7	71	7.8	33	6.9
Scripps Memorial Hospital	173	10.7	91	10.0	26	5.4
Manhattan EE & T Hospital	159	9.9	102	11.2	96	20.0
Kraff Eye Institute	152	9.4	130	14.3	78	16.3
Eye Foundation of Kansas City	128	8.0	1	0.1	0	0
LSU Eye Institute	112	7.0	19	2.1	3	0.6
O'Donnell Eye Institute	96	6.0	87	9.6	33	6.9
Rochester Eye Institute	91	5.7	72	7.9	37	7.7

3. Demographics and Baseline Characteristics

Demographic characteristics with respect to patient age and sex are shown below. The majority of the subjects were male. The mean age was 37.5 years at the time of surgery.

Table 3
Demographic Characteristics

	1109 Subjects (1610 Eyes)	676 Subjects (909 Eyes)	393 Subjects (480 Eyes)
Male	668	412	256
Female	441	264	137
Mean Age (Range)	37.5 18 - 71	37.4 18 - 72	36.2 18 - 62

Baseline Characteristics:

Baseline characteristics for the eyes evaluated were as follows:

Table 4

Baseline Characteristics

	1610 Eyes	909 Eyes	480 Eyes
Pre-treatment Myopia (Manifest Refraction-SE)			
≤ 1.00 D	6 (<1%)	2 (<1%)	1 (<1%)
>1.00 to 2.00 D	135 (8%)	75 (8%)	49 (10%)
>2.00 to 3.00 D	267 (17%)	137 (15%)	73 (15%)	
>3.00 to 4.00 D	364 (23%)	220 (24%)	132 (28%)
>4.00 to 5.00 D	378 (24%)	221 (24%)	124 (26%)
>5.00 to 6.00 D	330 (21%)	172 (19%)	101 (21%)
>6.00 D –	130 (8%)	82 (9%)	0 (10%)
Mean SE ±SD	-4.2 ± 1.5 D	-4.2 ± 1.5 D	-3.9 ± 1.3 D
(Range)	(-13.5* - -0.9)	(-13.5* - -0.9)	(-6.0 - -1.0)
UCVA	(N = 1606)**	(N = 908)***	
20/100 or Worse	1516 (94%)	862 (95%)	454 (95%)
20/50-20/80	85 (5%)	44 (5%)	24 (5%)
20/25-20/40	5 (<1%)	2 (<1%)	2 (<1%)
20/20 or Better	0 (0%)	0 (0%)	0 (0%)

* This eye was the fellow eye of an eye originally treated in the Phase I PRK study and required treatment due to severe anisometropia.

** Pre-treatment UCVA was not recorded for four patients.

*** Pre-treatment UCVA was not recorded for one patient.

F. Data Analysis and Results

1. Operative Characteristics

Table 5

VISX Excimer Laser Parameters

Pulse Rate: 5 Hz			
Fluence: 160 mJ/cm²			
Eyes at Ablation Zone:			
<5.0 mm	**5.0mm**	**5.5 mm**	**6.0 mm**
1 (<1%)	431 (27%)	269 (16%)	909 (56%)

2. Postoperative Characteristics and Results

a. Patient Accountability

The study protocol required eyes with twenty-four month follow-up. Out of the 1610 eyes used for safety analyses, 909 eyes were treated with a 6 mm ablation zone (701 eyes were treated at < 6 mm ablation zone). Of the 909 eye cohort, 613 eyes were treated on or before 10/20/93 (10/20/93 was the intended cut off date for patients with 2-year follow-up as recommended by the Ophthalmic Devices Panel). Of the 613 eyes, 40 eyes were not evaluable (2 died, 2 terminally ill, 15 withdrew, 21 had other surgical treatments) and 3 eyes were not yet due for visits, leaving 570 eyes that were evaluable. From the 570 evaluable cohort, 18 eyes missed their follow-up visits and 6 eyes were lost to follow-up (patient moved with no forwarding address). A total of 546 eyes (95.8%) were evaluated with 2-year follow-up. Of these eyes, 66 had pre-operative refractive errors greater than -6 diopters. The FDA requested VISX to pool subject data only up to -6 diopters (the study target population), hence, only the 480 eyes of up to -6 diopters are used for effectiveness analyses. Patient accountability is described in the following flow chart.

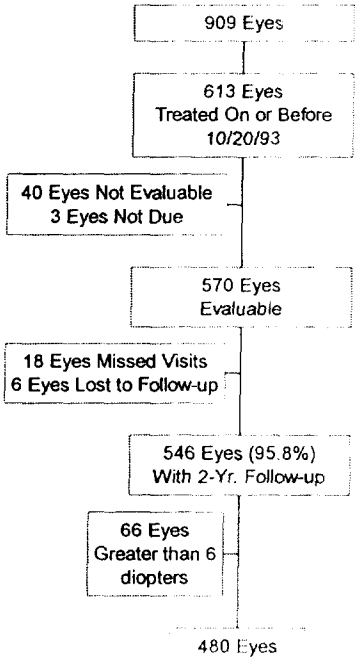

b. Effectiveness Results

Effectiveness data are presented for 480 eyes treated with a 6.0 mm ablation zone and ≥2 years follow-up.

Table 6 presents a summary of efficacy results stratified by pre-treatment myopia. This table presents data based on the *Last Observed* (LO) data analysis. The LO analysis presents data from the initial treatment only, thus data for eyes after retreatment are excluded.

Table 6
Effectiveness
6.0 mm Ablation Zone, ≥ 2 Years Follow-up**
***First Treatment Only* (Last Observed)**
(n=480)

Pre-treatment Myopia	1 to <2D (n=37 Eyes)		2 to <3D (n=75 Eyes)		3 to <4 D (n=119 Eyes)		4 to <5D (n=128 Eyes)		5 to 6D (n=121 Eyes)		ALL (n=480 Eyes)	
Effectiveness Parameter	n	%	n	%	n	%	n	%	n	%	n	%
(1) UCVA 20/20 or Better (Pre-treatment: N=0)	26	70.3%	51	68.0%	66	55.5%	77	60.2%	60	49.6%	280	58.3%
(2) UCVA 20/25 or Better (Pre-treatment: N=0)	32	86.5%	63	84.0%	92	77.3%	103	80.5%	93	76.9%	383	79.8%
(3) UCVA 20/40 or Better (Pre-treatment: N=2)	35	94.6%	72	96.0%	110	92.4%	121	94.5%	112	92.6%	450	93.8%
(4) Dev. From Intended Within +/-1D	33	91.7%φ	69	92.0%	111	93.3%	113	88.3%	106	87.6%	432*	90.2%φ
(5) Dev. From Intended <+1D (Not Overcorrected)	36	100.0%φ	74	98.7%	119	100.0%	127	99.2%	118	97.5%	474*	99.0%φ
(6) Dev. From Intended ≥-1D (Not Undercorrected)	33	91.7%φ	70	93.3%	111	93.3%	114	89.1%	109	90.1%	437*	91.2%φ
(7) Cases with BSCVA 20/20 or Better *Pre-treatment* and UCVA of 20/25 or Better AND a Spherical Equivalent Between -1.0D and +0.5D *Post-treatment*	30	85.7%φ	61	82.4%φ	86	74.8%φ	95	76.0%φ	87	75.7%φ	359*✦	77.4%φ
(8) Spherical Equivalent >+1D	0	0.0%	0	0.0%	0	0.0%	0	0.0%	1	0.8%	1*	0.2%

* One patient did not stay to have refractive exam.
✦ 15 other eyes had pre-treatment BSCVA worse than 20/20.
** Follow-up based upon eyes treated on or before 10/20/93.
φ These values were calculated using an (n) value slightly smaller than the (n) shown in the column heading due to missing measurements.

This effectiveness table indicates that in general, for each of the effectiveness parameters, the success is better in eyes with lower pre-treatment myopia.

Additional information concerning effectiveness parameters evaluated (again based on the LO analysis) is provided in the discussion that follows.

(1) Uncorrected Visual Acuity (UCVA)

Table 7 shows the distribution of uncorrected visual acuity, pretreatment and post-treatment. Pre-operatively, 0.4% of eyes had a UCVA better than or equal to 20/40. At 1 month after treatment 32.3% of the eyes had a UCVA of 20/20 or better, and 89.7% were 20/40 or better. At 2 years or more post-treatment, 58.3% of the patients were 20/20 or better and 93.8% were 20/40 or better.

Table 7
Uncorrected Visual Acuity (UCVA)
(n=480)

Visual Acuity	Preop n=480		1M n=436		3M n=415		6M n=421		12M n=344		18M n=294		≥24M n=480	
	n	(%)	n	(%)	n	(%)	n	(%)	n	(%)	n	(%)	n	(%)
20/20 or Better	0	(0.0%)	141	(32.3%)	187	(45.1%)	235	(55.8%)	219	(63.7%)	193	(65.6%)	280	(58.3%)
20/25 - 20/40	2	(0.4%)	250	(57.3%)	197	(47.5%)	163	(38.7%)	108	(31.4%)	87	(29.6%)	170	(35.4%)
20/50 - 20/80	24	(5.0%)	40	(9.2%)	28	(6.7%)	23	(5.5%)	16	(4.7%)	13	(4.4%)	28	(5.8%)
20/100 or Worse	454	(94.6%)	5	(1.1%)	3	(0.7%)	0	(0.0%)	1	(0.3%)	1	(0.3%)	2	(0.4%)

(2) Reduction Of Myopia

In **Table 8**, the spherical equivalent data (based upon manifest refraction) demonstrated the reduction of myopia, with most cases within ± 1D of intended post-treatment. At 1 month post-treatment, 86.9% of the eyes were ± 1D and at ≥ 24 months post-treatment this percentage had increased to 90.8%.

There was an initial hyperopic overshoot in some cases at 1 month post-treatment (10.6% of eyes had a spherical equivalent of ≥ +1D). However, there was a statistically significant decrease of this effect at 1 and 2 years post-treatment (1.2% and 0.4% of eyes, respectively, remained ≥ +1D).

Table 8
Reduction of Myopia
(n=480)

Spherical Equivalent	Preop n=480		1M n=434		3M n=411		6M n=419		12M n=342		18M n=294		≥24M n=479*	
	n	(%)	n	(%)	n	(%)	n	(%)	n	(%)	n	(%)	n	(%)
Myopia ≥3D	368	(76.7%)	1	(0.2%)	2	(0.5%)	4	(1.0%)	1	(0.3%)	1	(0.3%)	1	(0.2%)
Myopia 2 to <3D	75	(15.6%)	3	(0.7%)	7	(1.7%)	3	(0.7%)	1	(0.3%)	2	(0.7%)	3	(0.6%)
Myopia 1 to <2D	37	(7.7%)	30	(6.9%)	41	(10.0%)	34	(8.1%)	42	(12.3%)	33	(11.2%)	61	(12.7%)
± 0.5D	0	(0.0%)	297	(68.4%)	286	(69.6%)	300	(71.6%)	254	(74.3%)	214	(72.8%)	339	(70.8%)
± 1D	1	(0.2%)	377	(86.9%)	370	(90.0%)	387	(92.4%)	309	(90.4%)	269	(91.5%)	435	(90.8%)
Hyperopia 1 to <2D	0	(0.0%)	37	(8.5%)	10	(2.4%)	7	(1.7%)	3	(0.9%)	2	(0.7%)	2	(0.4%)
Hyperopia 2 to <3D	0	(0.0%)	7	(1.6%)	3	(0.7%)	1	(0.2%)	1	(0.3%)	0	(0.0%)	0	(0.0%)
Hyperopia ≥3D	0	(0.0%)	2	(0.5%)	0	(0.0%)	0	(0.0%)	0	(0.0%)	0	(0.0%)	0	(0.0%)

*One patient did not stay to have refractive exam.

(3) Deviation from Intended Correction (Predictability of Outcome)

In **Table 9**, the predictability of outcome has been assessed as the extent of deviation from intended correction (i.e., difference between achieved correction and intended correction). The intended final refractive error may not have been plano in certain cases (i.e., intended undercorrection for monovision). The percent of cases within ±0.5D and ±1D, respectively, of attempted correction remains relatively stable throughout the 24 month period. At 2 or more years, 90.2% of cases were within ±1D of attempted correction.

Table 9
Deviation From Intended Correction
(n=480)

Diopter	1M n=434		3M n=411		6M n=419		12M n=342		18M n=294		≥24M n=479*	
	n	(%)	n	(%)	n	(%)	n	(%)	n	(%)	n	(%)
± 0.5D	261	(60.1%)	265	(64.5%)	288	(68.7%)	233	(68.1%)	203	(69.0%)	309	(64.5%)
± 1D	363	(83.6%)	362	(88.1%)	384	(91.6%)	310	(91.6%)	270	(91.8%)	432	(90.2%)

*One patient did not stay to have refractive exam.

(4) Stability of Outcome

Long-term stability of visual outcome has been assessed using the data from 147 of the 480 eyes evaluated for efficacy that have visual outcome data available at each of the 12, 18, and 24 month time points following initial treatment. This subgroup of eyes was selected so as to eliminate bias that could result from missed follow-up during each examination period.

Stability of mean line improvement in UCVA and mean deviation from intended correction between the 12 to 18 month, 18 to 24 month, and 12 to 24 month time periods were assessed to evaluate stability of the visual and refractive outcome. Stability of mean line improvement in UCVA following PRK with the VISX Excimer Laser System is presented in **Figure 1**. There were no statistically significant differences in mean lines improved between any of the time periods assessed ($p>0.75$). Therefore, the mean line improvement in UCVA following treatment with the VISX Excimer Laser System remained stable over the 12, 18, and 24 month periods. When all eyes evaluated at each visit are plotted, the curve shows no statistically significant differences among follow-up visits.

Figure 1
Mean Line Improvement in UCVA From Pretreatment
By Time Period
(n=147)

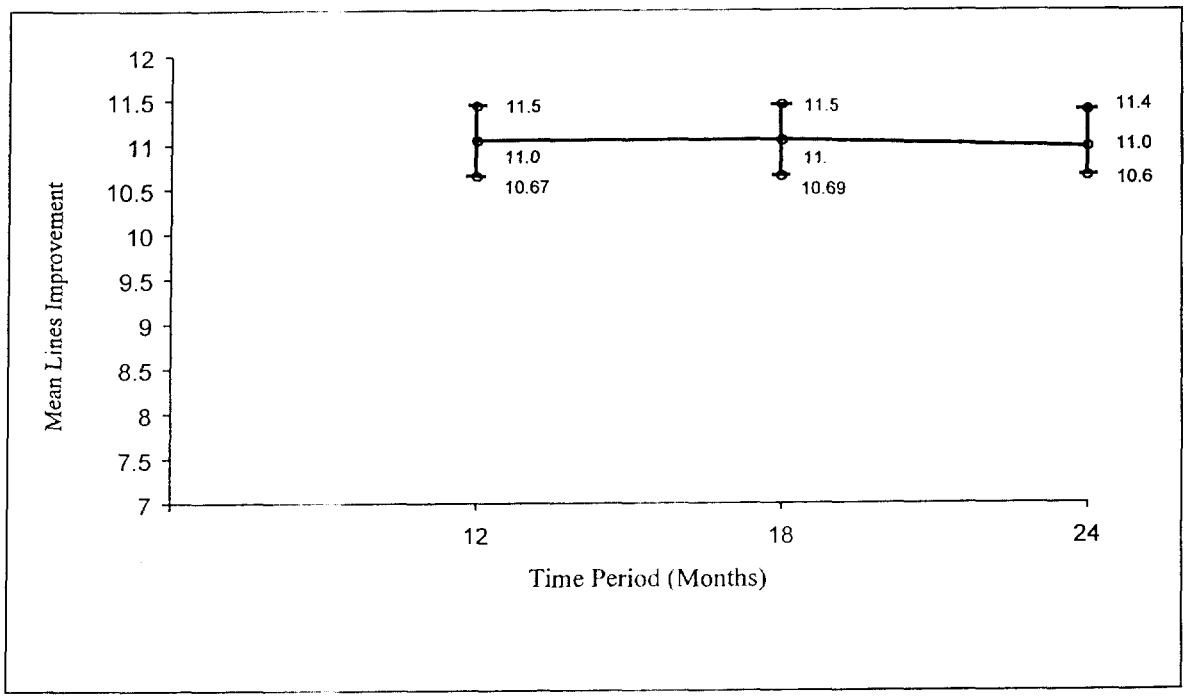

Stability of mean line improvement in UCVA. Cases included have data available at each of the 12, 18, and 24 month time periods. Vertical bars represent ±2 standard error of the mean.

Stability of the mean spherical equivalent **(Figure 2)** was assessed using the data from 126 of the 480 eyes evaluated for efficacy that had visual outcome data available at each of the 1, 3, 6, 12, 18, and 24 month time points following initial treatment. Results of this analysis show that the mean preoperative refractive error of -4.07 D was reduced to almost plano (0.08 D) at 1 month following treatment. At 3 months the mean myopia was 0.19 D and remained unchanged at 6, 12, 18 and 24 months. There is no statistically significant difference in the amount of myopia at each follow-up period ($p>0.15$). Therefore, the stability of spherical equivalent following PRK with the VISX Excimer Laser System remained stable over the 6 to 24 month period. When all eyes evaluated at each visit are plotted, the curve shows no statistically significant differences after 6 months.

Figure 2
Spherical Equivalent by Months
6.0 mm Ablation Zone, Pre-Treatment Myopia (1 to 6D)
First Treatment Only
(n=126)

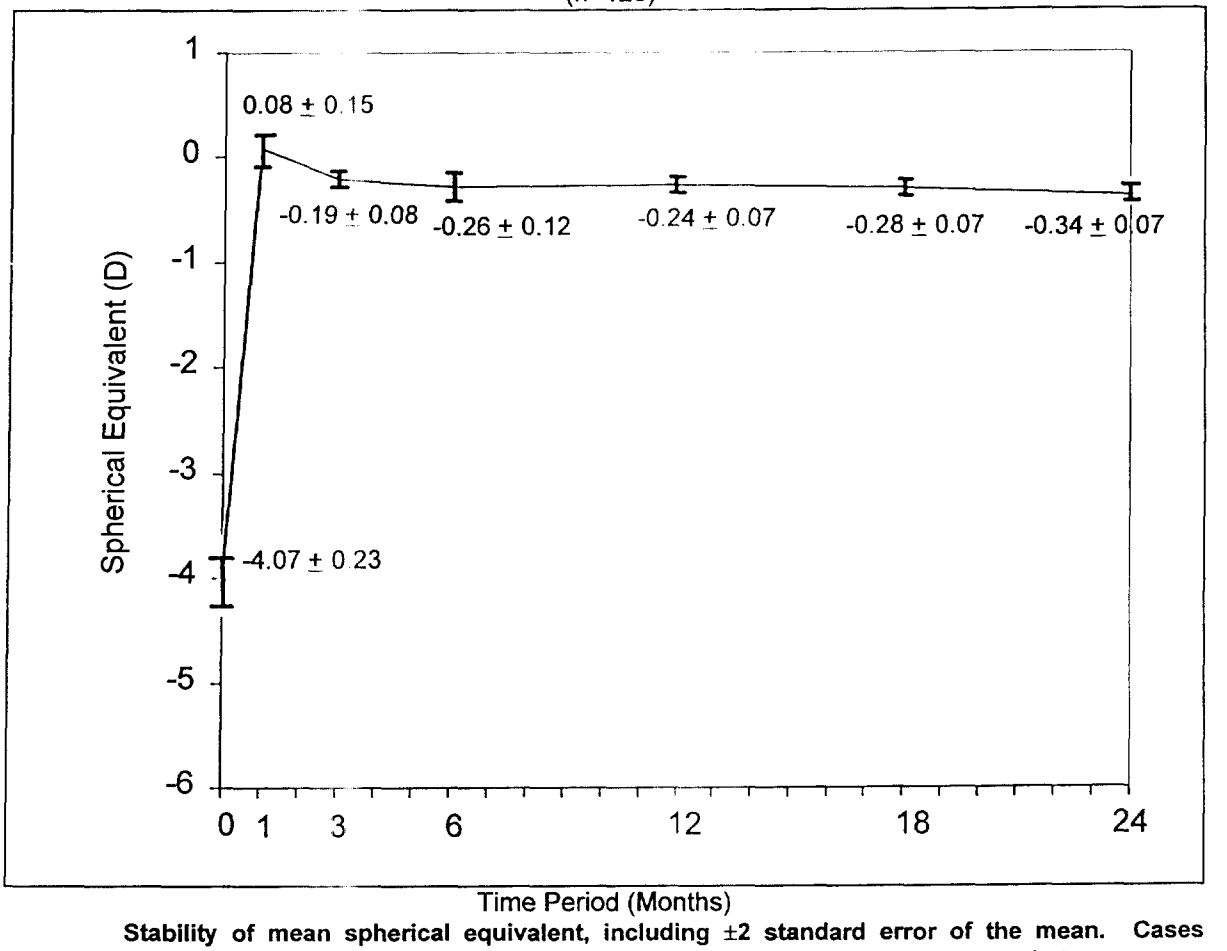

Stability of mean spherical equivalent, including ±2 standard error of the mean. Cases included have data available at each of the 1, 3, 6, 12, 18 and 24 month time periods.

Myopic shift (regression of effect) was assessed using the data from 126 (of 480) eyes that had data available at pretreatment, 1, 3, 6, 12, 18 and 24 months. Myopic shift based on mean spherical equivalent over time during the follow-up period was not statistically significant ($p>0.15$). Although 43/247 eyes (17.4%) had a myopic shift $\geq$ 0.5D from 12 to 24 months, only 7/247 (2.8%) of those eyes had a myopic shift of $\geq$ 1D. Further discussion of myopic shift as it relates to retreatment is presented in Retreatment Section.

c. Adverse Events

Adverse events data are presented in Table 10 and Table 11. Table 10 documents the adverse event occurrences for the 1610 cohort (5.0, 5.5 and 6.0 mm ablation zone) while Table 11 documented the 909 cohort with only the 6.0 mm ablation zone. The adverse events occurrence rate was similar for both cohorts. The 1610 cohort had a slight higher rate for single retreatment (higher than the 909 cohort by 1.3%) at 12-month. Whereas the 909 cohort showed a higher occurrence rate at one month (higher than 1610 cohort by 3.1%) for loss ≥ 2 lines of BSCVA.

Table 10

Summary of Adverse Events

Eyes Treated with 5.0, 5.5 and 6.0 mm Ablation Zones

(n=1610)†

Adverse Event Description	1M (n=1472)‡ n	(%)	3 to 6 M (n=1514)‡ n	(%)	12M (n=994)‡ n	(%)	≥24M (n=928)‡ n	(%)
1. Loss ≥2 Lines of BSCVA	156	(11.2%)φ	77	(5.1%)φ	16	(1.6%)φ	4	(0.4%)φ
2. Pre-treatment BSCVA 20/20 or Better with Post-treatment BSCVA Worse than 20/25	152	(10.9%)φ	69	(4.8%)φ	13	(1.4%)φ	10	(1.1 %)φ
3. Pre-treatment BSCVA 20/20 or Better with Post-treatment BSCVA Worse than 20/40	17	(1.2%)φ	9	(0.6%)φ	1	(0.1%)φ	1	(0.1%)φ
4. Overcorrection:								
>1D	189	(12.9%)φ	80	(5.3%)φ	11	(1.1%)φ	10	(1.1%)φ
>2D	48	(3.3%)φ	13	(0.9%)φ	1	(0.1%)φ	3	(0.3%)φ
5. Increase in Refractive Cylinder:								
≥1D	60	(4.1%)φ	75	(5.0%)φ	35	(3.6%)φ	26	(2.8%)φ
≥2D	4	(0.3%)φ	3	(0.2%)φ	0	(0.0%)	0	(0.0%)
6. Glare Testing: Abnormal (≥2 line loss in BSCVA with glare)	---	---	6	(1.7%)φ	6	(2.6%)φ	0	(0.0%)
7. Worsening of Patient Symptoms*:								
"Double Vision"	---	---	54	(3.6%)	26	(2.6%)	18	(1.9%)
"Sensitivity to Bright Lights"	---	---	99	(6.5%)	72	(1.2%)	30	(3.2%)
8. Difficulty with Night Vision**	---	---	109	(7.2%)	70	(7.0%)	46	(5.0%)
9. IOP Increase:								
> 5 mm Hg	78	(5.4%)φ	102	(6.8%)φ	22	(2.3%)φ	31	(3.4 %)φ
>10 mm Hg	8	(0.6%)φ	14	(0.9%)φ	0	(0.0%)	0	(0.0%)
10. Corneal Haze ≥ grade 2	8	(0.5%)φ	21	(1.4%)φ	4	(0.4%)	1	(0.1%)
11. Corneal Infection/Ulcer/Infiltrate (none lost BSCVA)	4	(0.3%)	0	(0.0%)	0	(0.0%)	0	(0.0%)
12. Corneal Decompensation/Edema (nonpersistent)	1	(0.1%)	0	(0.0%)	0	(0.0%)	0	(0.0%)
13. Lens Abnormality Post-treatment◊	2	(0.1%)	5	(0.3%)	2	(0.2%)	4	(0.4 %)
14. Secondary Surgical Intervention:								
Single Retreatments	0	(0.0%)	4	(0.3%)	55	(5.5%)	9	(1.0%)
Double Retreatments	0	(0.0%)	0	(0.0%)	0	(0.0%)	4	(0.4%)
Other Refractive Procedures	0	(0.0%)	4	(0.3%)	17	(1.7%)	19	(2.0%)

† Last Observation - Post-retreatment data not included.

‡ For all adverse events, percentages are given as:

$$\frac{\text{number of eyes with at least one occurrence observed at the specified study visit}}{\text{number of eyes examined at the specified study visit}}$$

◊ Adverse Event #13: lens abnormality post-treatment counted by first occurrence.

* Reflects number of patients who reported these symptoms occurring 'often or always' post-treatment and worse than pre-treatment.

** Reflects number of patients who reported this symptom as significantly worse than pre-treatment.

φ These values were calculated using an (n) value slightly smaller than the (n) shown in the column heading due to missing measurements.

Table 11

Summary of Adverse Events

Eyes Treated with 6.0 mm Ablation Zone

(n=909)†

Adverse Event Description	1M (n=810)‡ n	(%)	3 to 6 M (n=846)‡ n	(%)	12M (n=520)‡ n	(%)	≥24M (n=542)‡ n	(%)
1. Loss ≥2 Lines of BSCVA	113	(14.3%)φ	50	(6.0%)φ	11	(2.1%)	1	(0.2%)
2. Pre-treatment BSCVA 20/20 or Better with Post-treatment BSCVA Worse than 20/25	114	(14.9%)φ	52	(6.4%)φ	10	(2.0%)φ	7	(1.3%)
3. Pre-treatment BSCVA 20/20 or Better with Post-treatment BSCVA Worse than 20/40	13	(1.7%)φ	7	(0.9%)φ	1	(0.2%)	0	(0.0%)
4. Overcorrection:								
>1D	88	(11.0%)φ	44	(5.2%)	6	(1.2%)	7	(1.3%)
>2D	24	(3.0%)	9	(1.1%)	1	(0.2%)	3	(0.6%)
5. Increase in Refractive Cylinder:								
≥1D	36	(4.5%)φ	46	(5.4%)	16	(3.1%)	16	(3.0%)
≥2D	2	(0.2%)	3	(0.4%)	0	(0.0%)	0	(0.0%)
6. Glare Testing: Abnormal (≥2 line loss in BSCVA with glare)	---	---	1	(1.0%)φ	1	(1.6%)φ	0	(0.0%)
7. Worsening of Patient Symptoms*:								
"Double Vision"	---	---	23	(2.7%)	8	(1.5%)	7	(1.3%)
"Sensitivity to Bright Lights"	---	---	35	(4.1%)	25	(4.8%)	16	(3.0%)
8. Difficulty with Night Vision**	---	---	41	(4.8%)	27	(5.2%)	21	(3.9%)
9. IOP Increase:								
> 5 mm Hg	35	(4.4%)φ	61	(7.2%)	9	(1.8%)φ	19	(3.9%)φ
>10 mm Hg	2	(0.2%)	7	(0.8%)	0	(0.0%)	0	(0.0%)
10. Corneal Haze ≥ grade 2	3	(0.4%)	11	(1.3%)	3	(0.6%)	1	(0.2%)
11. Corneal Infection/Ulcer/Infiltrate (none lost BSCVA)	3	(0.4%)	0	(0.0%)	0	(0.0%)	0	(0.0%)
12. Corneal Decompensation/Edema (nonpersistent)	1	(0.1%)	0	(0.0%)	0	(0.0%)	0	(0.0%)
13. Lens Abnormality Post-treatment◊	1	(0.1%)	2	(0.2%)	1	(0.2%)	3	(0.6%)
14. Secondary Surgical Intervention:								
Single Retreatments	0	(0.0%)	1	(0.1%)	22	(4.2%)	2	(0.4%)
Double Retreatments	0	(0.0%)	0	(0.0%)	0	(0.0%)	0	(0.0%)
Other Refractive Procedures	0	(0.0%)	4	(0.5%)	14	(2.7%)	9	(1.7%)

† Last Observation - Post-retreatment data not included.

‡ For all adverse events, percentages are given as:

$$\frac{\text{number of eyes with at least one occurrence observed at the specified study visit}}{\text{number of eyes examined at the specified study visit}}$$

◊ Adverse Event #13: lens abnormality post-treatment counted by first occurrence.

* Reflects number of patients who reported these symptoms occurring 'often or always' post-treatment and worse than pre-treatment.

** Reflects number of patients who reported this symptom as significantly worse than pre-treatment.

φ These values were calculated using an (n) value slightly smaller than the (n) shown in the column heading due to missing measurements.

Post treatment BSCVA worse than 20/25 was also higher at one month (4%) and at 3-6 months (1.6%).

The following is a detailed explanation of adverse events for the 909 cohort:

The incidence of adverse events reported in the study were tabulated at 1, 3-6, 12 and ≥24 months post-treatment. Adverse events are calculated as the percentage of occurrences observed at each time period out of all eyes examined during that time period.

Visual Acuity. Table 12 details the loss in BSCVA over time after treatment. The most accurate parameter to assess visual outcome as it pertains to patient safety is the number of eyes with a loss of BSCVA. Only one eye (0.2%) had a BSCVA loss of ≥ 2 lines at 2 years post-treatment. Of those patients with a pre-treatment BSCVA of 20/20 or better, only 1.3% had a post-treatment BSCVA of worse than 20/25 and none had a BSCVA worse than 20/40 at ≥ 2 years **(See Table 11).**

Table 12
Reduction in BSCVA
(n=909)

BSCVA Line Change	Preop (n=909)		1M (n=792)		3M (n=737)		6M (n=746)		12M (n=511)		18M (n=388)		24M (n=328)	
	n	(%)	n	(%)	n	(%)	n	(%)	n	(%)	n	(%)	n	(%)
Loss, >2 Lines	0	(0.0%)	44	(5.6%)	12	(1.6%)	5	(0.7%)	2	(0.4%)	1	(0.3%)	0	(0.0%)
Loss, 2 Lines	0	(0.0%)	69	(8.7%)	28	(3.8%)	12	(1.6%)	9	(1.8%)	1	(0.3%)	1	(0.3%)
Loss, 1 Line	0	(0.0%)	191	(24.1%)	136	(18.5%)	100	(13.4%)	50	(9.8%)	47	(12.1%)	28	(8.5%)

Overcorrection. Overcorrection was assessed at two levels: >1 D and >2 D. Overcorrection of eyes was reported with the greatest frequency at the 1 month visit during the healing period. The long term refractive status of eyes resulting in an overcorrection of >1 D as seen at 2 years or later was 1.3% (7/540) with only 3/540 (0.6%) overcorrected by >2 D.

Increase in Refractive Cylinder. The refractive status of eyes was assessed at 1, 3, 6, 12, 18 and ≥ 24 months. Increases in refractive cylinder of ≥ 1 D and ≥ 2 D were considered significant. Less than 1% of eyes were noted to have an increase of ≥ 2 D during any exam period and no eyes had an

increase of ≥ 2 D at 1 year or later. Between 3.1% and 5.4% of eyes were reported to have an increase of ≥ 1 D of refractive cylinder at each of the post-operative time periods.

Glare Testing. The results of glare tests were considered abnormal if there was a ≥ 2 line loss of BSCVA under moderate glare conditions with the Brightness Acuity Test (BAT). Glare tests were administered at 6 months and every 6 months thereafter. Abnormal glare testing was reported on 1.6% of eyes at 1 year and 0% at 2 years or later.

Visual Symptoms. Subjective evaluations of visual symptoms were obtained by the use of a self-administered patient questionnaire at the 6, 12, 18 and 24 month examinations. Evaluation of symptoms was assessed by comparison to each patient's pre-operative questionnaire and/or the information provided in the follow-up questionnaire.

Among the symptoms surveyed, *Double Vision* and S*ensitivity to Bright Lights* were considered "worsened" when comparison to baseline yielded a change from 'never or rarely' to 'often or always' and/or the patient noted a significant worsening from the pretreatment. These symptoms are expressed as the number of responses that were reported as worsened at each time period. When considered across all eyes at 2 years or later, patients reported significant worsening of *Double Vision* and *Sensitivity to Bright Lights* 1.3% and 3.0% of the time, respectively.

Difficulty with Night Vision was considered as "worsened" when comparison to baseline yielded a change from 'not present' to 'present' and/or the patient noted a significant worsening from pretreatment. When considered across all eyes at 2 years or later, patients reported significant worsening of *Difficulty with Night Vision* 3.9% of the time.

Intraocular Pressure (IOP). Since the recommended post-operative regimen included the use of topical steroids, IOP was monitored at baseline and each post-op visit starting at 1 month. Increases of >5 or >10 mm Hg were reported. In addition, increases include IOP measurements that changed >5 or >10 mm Hg but did not rise above 20 mm Hg. Less than 1% of eyes demonstrated an increase of >10 mm Hg at any time period post-treatment. Increases of >5 mm Hg were reported in

1.8% to 7.2% of eyes evaluated, regardless of the post-operative period.

Corneal Haze. Corneal haze was considered a complication of surgery if recorded as ≥ grade 2. As defined in the protocol, grade 2 is moderate haze which made refraction possible, but difficult. A haze grade of ≥ 2 was more frequently reported (1.3%) during the intermediate post-operative period (3 to 6 months), as compared to 0.2% at ≥ 2 years post-treatment.

Corneal and Other Ocular Events. One eye (0.1%) experienced transient (non-persistent) corneal edema, and corneal infection/ulcer/infiltrate was reported in three eyes (0.4%). All 4 incidents occurred during the first 1 week post-operative period. None of these patients suffered a loss of BSCVA after appropriate antibiotic treatment and resolution of the event. There were no incidences of the following potential adverse events: lens abnormalities with vision loss, corneal perforations, intraocular infection, persistent corneal edema, hyphema, hypopyon, or cystoid macular edema.

Lens Abnormalities. Less than 1% of eyes experienced lens abnormalities at any time during the study, which were not present pre-treatment; however, none of these eyes suffered a two line BSCVA loss or BSCVA loss to worse than 20/25-1 at the last exam. Only three (0.6%) of these eyes were noted to have lens abnormalities at 2 years or later post-operatively. A total of seven eyes had lens abnormalities that were not seen on subsequent exams.

Secondary Surgical Intervention. Of the 909 eyes treated, 5/846 (0.6%) had another refractive procedure at 3 to 6 months, 36/520 (6.9%) at 1 year, and 11/542 (2.0%) at 2 years or more post-treatment.

d. Retreatments

Retreatment data are presented for the initial cohort of the 909 eyes treated with a 6.0 mm ablation zone. Patients were eligible for retreatment after 6 months of follow-up. Thirty-three eyes (3.6%) were retreated. The data analyses for retreatment are presented in **Table 13** through **Table 17.**

Table 13
Summary of Retreatment
(n=909)

Reason for Retreatment	Number of Eyes	Percentage of Retreated Eyes (n=33)	Percentage of All Eyes (n=909)
Regression*	9	27.3%	1.0%
Undercorrection**	12	36.4%	1.3%
Regression w/Haze	5	15.2%	0.6%
Undercorrection w/Regression and Haze***	3	9.1%	0.3%
Other: Decentered Ablation, Haze, Induced Cylinder	4	12.1%	0.4%
Total	33	100.0%	3.6%

* *Regression: a myopic change in spherical equivalent of more than 0.5D.*
** Undercorrection: deviation from intended correction of ≤0.5D.
*** Haze: a grade of ≥1 at any time prior to retreatment.

Table 14
UCVA in Retreatment Cases
(n=33)*

UCVA	Pre-Treatment		Before Retreatment		After Retreatment	
	n	(%)	n	(%)	n	(%)
Better than 20/20	0	(0.0%)	0	(0.0%)	2	(7.1%)
20/20-20/40	0	(0.0%)	0	(0.0%)	20	(71.4%)
20/50-20/80	0	(0.0%)	28	(84.8%)	4	(14.3%)
20/100 or worse	33	(100.0%)	5	(15.2%)	2	(7.1%)
Total	33	(100.0%)	33	(100.0%)	28**	(100.0%)

* Represents 33/909 (3.6%) of eyes requiring retreatment.
**5 eyes did not have a visit ≥6 months after retreatment.

Table 15
BSCVA in Retreatment Cases
(n=33)*

BSCVA	Pre-Treatment n	(%)	Before Retreatment n	(%)	After Retreatment n	(%)
Better than 20/20	4	(12.1%)	2	(6.1%)	4	(14.8%)
20/20	27	(81.8%)	21	(63.6%)	18	(66.7%)
20/25	2	(6.1%)	5	(15.2%)	4	(14.8%)
20/30	0	(0.0%)	4	(12.1%)	0	(0.0%)
20/40	0	(0.0%)	0	(0.0%)	1	(3.7%)
20/50	0	(0.0%)	1	(3.0%)	0	(0.0%)
Total	33	(100.0%)	33	(100.0%)	27**	(100.0%)

* Represents 33/909 (3.6%) of eyes requiring retreatment.
** 5 eyes did not have visit ≥6 months after retreatment. One eye had missing BSCVA at the visit after retreatment.

Table 16
Spherical Equivalent in Retreatment Cases
(n=33)*

Spherical Equivalent	Pre-Treatment n	(%)	Before Retreatment n	(%)	After Retreatment n	(%)
Myopia > 3D	28	(84.8%)	2	(6.1%)	1	(3.6%)
Myopia > 2 to 3D	4	(12.1%)	5	(15.2%)	1	(3.6%)
Myopia > 1 to 2D	1	(3.0%)	15	(45.5%)	4	(14.3%)
± 0.5D	0	(0.0%)	2	(6.1%)	14	(50.0%)
± 1D	0	(0.0%)	10	(30.3%)	22	(78.6%)
Hyperopia > +1 to 2D	0	(0.0%)	1	(3.0%)	0	(0.0%)
Total	33	(100.0%)	33	(100.0%)	28**	(100.0%)

* Represents 33/909 (3.6%) of eyes requiring retreatment.
** 5 eyes did not have a visit ≥6 months after retreatment.

Table 17 Haze in Retreatment Cases (n=33)*							
Haze		Pre-Treatment		Before Retreatment		After Retreatment	
		n	(%)	n	(%)	n	(%)
0.0 - 0.5	Trace	33	(100.0%)	28	(84.8%)	25	(92.6%)
1 - 1.5	Mild	0	(0.0%)	3	(9.1%)	1	(3.7%)
2.0	Moderate	0	(0.0%)	2	(6.1%)	0	(0.0%)
3.0	Severe	0	(0.0%)	0	(0.0%)	1	(3.7%)
Total		33	(100.0%)	33	(100.0%)	27**	(100.0%)

* Represents 33/909 (3.6%) of eyes requiring retreatment.
** 5 eyes did not have a visit ≥6 months after retreatment. One eye had missing Haze score at visit after retreatment.

Risks. The risks for patients requiring retreatment are the same as for the original procedure with the additional caveat that patients who are prone to haze formation and an accompanying loss of BSCVA and/or UCVA are similarly prone to healing with haze after retreatment. There is no evidence that undercorrection by the laser system is causative for these retreatments.

e. Re-epithelialization

Of the 909 eyes evaluable for safety, 884 (97.2%) eyes were available for an analysis of re-epithelialization. Re-epithelialization was defined as either no epithelial defect on the last daily exam post-treatment, or discharged with a ≤ 25.0% defect and seen at 1 month post-operatively without complication or adverse event noted. By 5 days post-treatment, 86.5% (765/884) had re-epithelialized. All patients had re-epithelialized at the next visit with no adverse events noted.

f. Topographic Analysis/Central Islands

Topographic analysis was performed on a subset of 350 eyes to study surface regularity. So-called "central islands", or slightly raised central portions of the cornea, were seen in 11.8% (24/203) of eyes at 3 months. The incidence of central islands reduced spontaneously, with no nitrogen blow software, to 5.9% (11/185) at 1 year and 3.6% (2/55) at 2 years. Software refinements further reduced the incidence of central islands to

3.0% at 3 months and 0% at 1 year. No clinical correlation was seen between the presence of central islands and outcome data.

g. Endothelial Cells

Endothelial cell counts were performed on a subset of 23 eyes at two clinical sites. No statistically significant changes in endothelial cell density, coefficient of variation or percent hexagonality were seen between pre-treatment and post-treatment in 6-month intervals which were studied during the 2 years post-treatment. These results are consistent with published literature which report no detrimental effects of excimer laser surgery on the human corneal endothelium. [3-7]

h. Pain

Complaints of pain were categorized as 'None', 'Mild', 'Moderate', or 'Severe'. **Table 18** shows the level of pain reported by patients during re-epithelialization following treatment.

Table 18
Pain During Re-epithelialization
(n = 909)*

None		Mild		Moderate		Severe	
n	(%)	n	(%)	n	(%)	n	(%)
271	(29.8%)	356	(39.2%)	211	(23.2%)	60	(6.6%)

*Data was not available for 11 patients.

X. CONCLUSIONS DRAWN FROM THE STUDIES

The laboratory, animal and clinical results based on 909 eyes treated with a 6.0 mm ablation zone and 1 to 6 D of myopia provide reasonable assurance that the VISX Excimer Laser System is safe and effective for PRK procedures when used as indicated in accordance with the directions for use.

XI. PANEL RECOMMENDATIONS

On October 20, 1995, the Ophthalmic Devices Panel recommended that the premarket approval application for the excimer laser be approved, with the condition that two-year or more of follow-up data be submitted for review and approval by the Panel members and the Center for Devices and Radiological Health (CDRH).

XII. FDA DECISION

CDRH concurred with the Ophthalmic Devices Panel's recommendation of October 20, 1995 and issued a letter to VISX, Inc. on November 17, 1995 advising that the PMA was approvable subject to submission of two-year follow-up data as recommended by the Panel and required by FDA. In an amendment received by FDA on December 15, 1995, VISX submitted the required data. FDA issued an approval order on March 27, 1996.

In addition, postapproval studies were required of the applicant to conduct studies to detect rare but serious adverse events and to test contrast sensitivity with glare under dilated pupil conditions. Postapproval annual reporting requirements included 4 year follow-up of 500 premarket study subjects to be included in the labeling upon completion, reports on unscheduled maintenance visits for 2 years, assessment of complication rates, and device tampering.

The sponsor's manufacturing facility was inspected and found to be in compliance with the device Good Manufacturing Practice regulations. Final GMP approval was dated March 7, 1996.

XIII. APPROVAL SPECIFICATIONS

- Postapproval Requirements and Restrictions: see Approval Order

- Hazards to Health from Use of the Device: see Indications, Contraindications, Warnings, Precautions, and Adverse Events in the labeling

- Directions for Use: see the labeling

REFERENCES

1. Srinivasan R, Wynne JJ, and Blum SE. Far-UV photo etching of organic material. *Laser Focus* 19:62, 1983.

2. Trokel SL, Srinivasan R, and Braren B. Excimer Laser Surgery of the Cornea. *Am J Ophthal.* 96 (6):710-15, 1983.

3. Carones F, Brancato R, Venturi E, et al. The Corneal Endothelium After Myopic Excimer Laser Photorefractive Keratectomy. *Arch Ophthalmol* 1994; 112: 920-924.

4. Mardelli PG, Piebenga LW, Matta CS, et al. Corneal Endothelial Status 12 to 55 Months after Excimer Laser Photorefractive Keratectomy. *Ophthalmology* 1995; 102: 544-549.

5. Perez-Santonia JJ, Meza J, Moreno E, et al. Short-Term Corneal Endothelial Changes after Photorefractive Keratectomy. *J Refract Corneal Surg* 1994; 10:S194-S198.

6. Amano S, Shimizu K. Corneal Endothelial Changes After Excimer Laser Photorefractive Keratectomy. *Am J Ophthalmol* 1993; 116: 692-694.

7. Cennamo G, Rosa N, Guida E, et al. Evaluation of Corneal Thickness and Endothelial Cells Before and After Excimer Laser Photorefractive Keratectomy. *J Refract Corneal Surg.* 1994; 10: 137-141.

FACTS YOU NEED TO KNOW ABOUT PHOTOREFRACTIVE KERATECTOMY (PRK) SURGERY FOR NEARSIGHTEDNESS

PATIENT INFORMATION BOOKLET

Mildly to Moderately Nearsighted Patients (-1.0 to -6.0 diopters)
With Less Than or Equal to 1.0 Diopter of Astigmatism

Please read this entire booklet. Discuss its contents with your doctor so that all your questions are answered to your satisfaction. Ask any questions you may have before you agree to the surgery.

VISX, INCORPORATED
3400 CENTRAL EXPRESSWAY
SANTA CLARA, CA 95051-0703
U.S.A.

TEL: (408) 733-2020

69

Copyright 1996 by VISX, Incorporated
All Rights Reserved

VISX™ is a trademark of VISX, Incorporated.
VisionKey® is a registered trademark of VISX, Incorporated.

The VISX Reader/Writer utilizes software owned by LaserCard Systems Corporation

TABLE OF CONTENTS

Section	Page
Table of Contents	i
Introduction	1
How the Eye Functions	1
What is PRK?	2
Benefits	3
Risks	3
Contraindications	4
Warnings	5
Precautions	5
Are You a Good Candidate for PRK?	5
Before the Surgery	6
The Day of Surgery	6
The First Days After Surgery	7
Questions to Ask Your Doctor	9
Self-Test	10
Summary of Important Information	11
Patient Assistance Information	12

This page left intentionally blank.

INTRODUCTION

The information in this booklet is to help you decide whether or not to have Photorefractive Keratectomy (PRK) laser surgery to correct or partly correct your nearsightedness (myopia). Some other ways to correct nearsightedness are glasses, contact lenses and other kinds of refractive surgery such as radial keratotomy (RK). PRK using the VISX Excimer Laser System is a completely different type of surgery from RK.

If both of your eyes are nearsighted, your doctor may recommend PRK surgery for both eyes to achieve satisfactory vision. However, sometimes it is better to have PRK done on only one eye. Talk with your doctor about whether it would be better to treat one or both eyes in your case.

Please read this booklet completely. Discuss any questions with your doctor before you decide if PRK is right for you. Only an eye care professional trained and certified in PRK can determine whether or not you are a suitable candidate. The vision requirements of some occupations, such as military pilots, cannot be met by having RK or PRK.

HOW THE EYE FUNCTIONS

Normal Eye

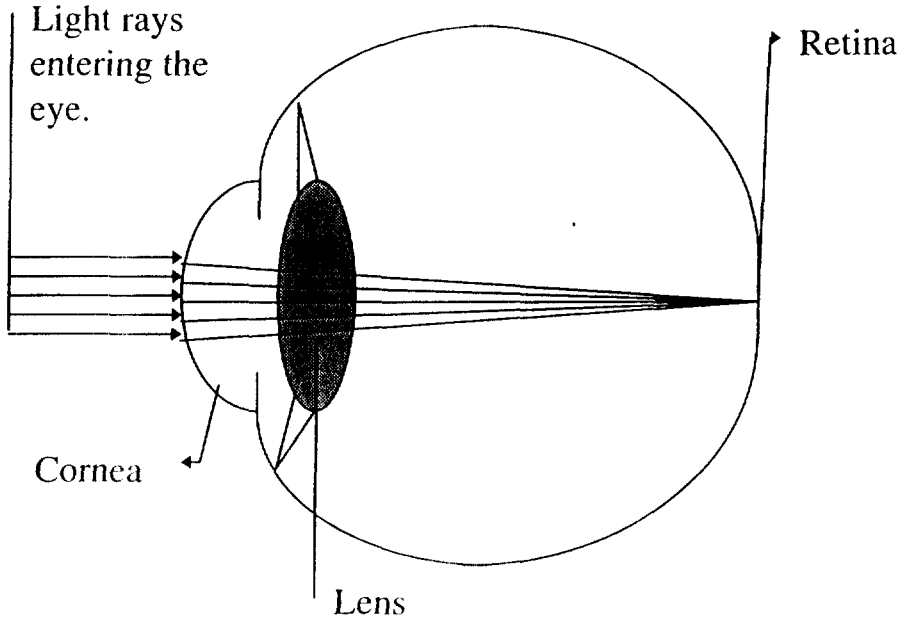

Nearsighted Eye

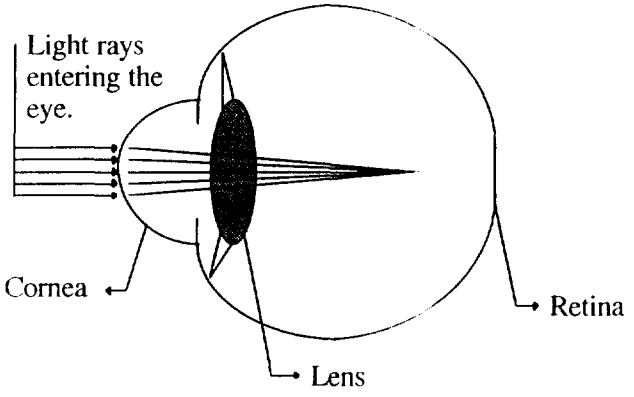

Eye After PRK

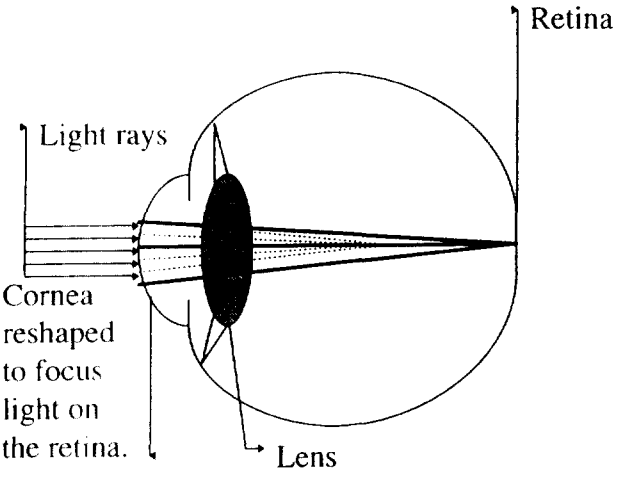

The cornea and lens of the eye focus light like a camera lens to form an image on the retina at the back of the eye. The cornea, where light first enters the front of the eye, provides about two thirds of the eye's focusing power, and the lens inside the eye provides the other third. Some eyes focus, or refract, the light too much, so that the images of distant objects are formed in front of the retina, and the image on the retina is blurred. This condition is called nearsightedness, or myopia. Myopia usually starts in childhood and gets progressively worse through adolescence. It usually stops changing by the late teens, but it can sometimes continue to get worse into the mid-twenties.

Nearsightedness can be corrected by any method that reduces the total refractive power of the eye. Eyeglasses and contact lenses do this by putting in front of the eye "negative" lenses that are thicker at the edge than in the center. PRK does it by flattening the central part of the cornea.

During a regular eye examination, your doctor uses lenses to measure your nearsightedness in units called "diopters". The VISX Excimer Laser System is approved for correcting from one to six diopters of nearsightedness.

WHAT IS PRK?

PRK is laser surgery to correct nearsightedness (myopia). An excimer laser beam is used to flatten the front of the cornea. The laser beam removes small amounts of tissue from the front of the cornea. This differs from RK, which uses a knife to make deep cuts around the center of the cornea.

An excimer laser produces a powerful beam of ultraviolet light. The laser is controlled by the doctor. It produces a series of rapid pulses that removes small amounts of corneal tissue. Excimer laser light does not penetrate the eye and leaves other eye structures (iris, lens, retina) undisturbed.

PRK surgery is performed on one eye at a time. The second eye can be treated if all goes well and vision stabilizes without complications or adverse reactions. Laser surgery of the second eye is usually done three months after the first eye, if needed.

In the U.S. clinical studies of the VISX Excimer Laser System, 58% of eyes could see 20/20 or better without glasses after PRK. Ninety-four percent could see 20/40 or better. Although vision without glasses improved for all eyes, some still needed glasses or contact lenses for some tasks after PRK. PRK does not eliminate the need for reading glasses. NOTE: You may need reading glasses after laser surgery even if you did not wear them before.

BENEFITS

- PRK surgery, as performed with the VISX Excimer Laser System, is effective in reducing nearsightedness between -1.0 and -6.0 diopters in patients with less than or equal to 1.0 diopter of astigmatism.
- PRK may reduce overall nearsightedness, while also reducing or eliminating dependency upon contact lenses or glasses.

RISKS

If the results of the surgery are not satisfactory, you may need to have additional PRK surgery in the same eye.

THE FIRST WEEK FOLLOWING SURGERY

- Pain and discomfort may last for up to 3 days after surgery.
- Blurred vision and tearing will occur as the cornea heals.
- You will be sensitive to bright lights.

THE FIRST TWO TO SIX MONTHS FOLLOWING SURGERY

- Your intraocular pressure may increase due to use of anti-inflammatory medications. This is usually resolved by drug therapy or by stopping the anti-inflammatory medication.

- Your cornea may become hazy or cloudy enough to affect your vision. This haze typically disappears over time, but some patients continue to experience haze over 2 - 3 years.

MORE THAN ONE YEAR AFTER SURGERY

VISX clinical studies showed that at one or more years after surgery, the following percentages of patients still had problems with their vision:

• Difficulty with night vision	3.9%
• Increased sensitivity to bright light	3.0%
• At least one diopter worsening of nearsightedness	2.8%
• Double vision worse after surgery if present before surgery	1.3%

The studies also showed that the following vision-threatening events happened less than 1% of the time after PRK surgery:

- Losing a significant amount of vision even with glasses
- Too large a correction (causing farsightedness)
- Lens abnormality (for example: cataract, opacity or cloudiness)
- Visually significant corneal haze

CONTRAINDICATIONS

You should **NOT** have PRK surgery if:

- You have collagen vascular, autoimmune or immunodeficiency diseases (for example,lupus, AIDS).

- You are pregnant or nursing.

- You show signs of keratconus (corneal disease).

- You have a tendency to form scars.

- You are taking one or more of the following medications:
  Accutane (isotretinoin)
  Cordarone (amiodarone hydrochloride)

WARNINGS

Discuss with your doctor if:

- Your nearsightedness is changing.
- You are diabetic or have severe allergies
- You have had *Herpes simplex* or *Herpes zoster.*

PRECAUTIONS

The safety and effectiveness of the VISX Excimer Laser System has **NOT** been established in:

- Eyes with disease or corneal abnormality (for example, scar, infection, etc.).
- Eyes with previous surgery or injury to the center of the cornea where PRK will be performed.
- Eyes with abnormal blood vessels within 1.0 mm of the center of the cornea area where PRK will be performed.
- Patients under 18 years of age.
- Patients over the long term (more than 3 years after the surgery).

Although the effects of PRK on visual performance under poor lighting conditions have not been determined, it is possible that you will find it more difficult than usual to see in conditions such as very dim light, rain, snow, fog or glare from bright lights at night.

ARE YOU A GOOD CANDIDATE FOR PRK?

If you are considering PRK, you must:

- Be at least 18 years of age.
- Have healthy eyes which are free from eye disease or corneal abnormality (for example: scar, infection, etc.).
- Have nearsightedness (myopia) between -1.0 to -6.0 diopters with no more than 1.0 diopter of astigmatism.

- Have documented evidence that the change in your refraction is less than or equal to 0.50 diopter per year for at least one year prior to your pre-operative examination.

- Be informed of PRK risks and benefits as compared to other available treatments for nearsightedness (myopia).

- Be willing to sign an informed consent form, if provided by your eye care professional.

BEFORE THE SURGERY

If you are interested in having PRK, you will need to have a pre-surgical examination to determine if your eye is healthy and suitable for PRK. This will include a complete physical and eye history, and thorough examination of both eyes. In addition, computerized mapping of your cornea will be done to determine if it is smooth and properly shaped.

IMPORTANT:
If you wear contact lenses, it is very important to stop wearing them 2 - 4 weeks before the evaluation. Failure to do this will produce poor surgical results.

Before the surgery, please tell your doctor whether you take any medications or have any allergies. Also, talk with your doctor about eating or drinking immediately before the surgery. You should also arrange for transportation, since you must not drive immediately after the surgery. You can resume driving only after receiving permission from your doctor.

THE DAY OF SURGERY

Before the surgery you will be asked to listen to the sounds of the treatment so that you will be prepared for the noise the laser makes during surgery. Anesthetic (numbing) drops will be placed into the eye to be treated and you will be escorted into the room with the laser. You will lie on your back in a reclining chair and look up at a microscope that will deliver the laser light to your cornea. An instrument will be placed between your eyelids to hold them open during the surgery. There will also be a temporary shield covering the eye not having surgery.

The surgery begins with removal of the outermost layer of the cornea. This is done with a small spatula. After this has been completed, the doctor will reposition your head in the chair, and refocus the microscope. You will be asked to look directly at a blinking red light. Try to keep both eyes open without squinting, as this makes it easier to keep looking at the blinking red light. Small amounts of tissue will then be removed from your cornea using the VISX Excimer Laser.

IMPORTANT:
It is very important that you keep looking at the blinking red light during the procedure, even if the light fades or becomes dim. Your surgical results depend upon your looking at this red, blinking light throughout the treatment.

You will be under the laser less than 1 minute and, overall, the surgery takes about 10 minutes.

After the laser surgery is complete, some drops or ointment will be placed into your eye. Then it will be covered and patched for your protection and comfort. The surgery is painless because of the anesthetic drops.

When the anesthetic drops wear off (about 45 to 60 minutes), your eye may hurt for 1 to 3 days. Most patients describe this pain as moderate to severe. Do **NOT** rub your eyes for the first 3 to 5 days. Your doctor can prescribe pain medication to make you more comfortable during this time after the surgery.

WARNING:
Your doctor will monitor you for any side-effects if topical steroids were used. Possible side-effects of prolonged topical steroid use are ocular hypertension, glaucoma or cataract formation.

THE FIRST DAYS AFTER SURGERY

The eye patch will be removed the next day in your doctor's office. You will be mildly sensitive to light and have the feeling that something is in your eye for the first few days. Sunglasses may make you more comfortable during this time.

Your vision should become stable within the first several weeks after surgery. Some patients may experience some small changes (for example, improvement or worsening of their vision). These changes may occur up to six months or more after surgery.

A haze or cloudiness is typically seen in the cornea following surgery, but usually does not affect your vision. This haze tends to decrease over time and usually disappears completely over a 12 to 24-month period.

IMPORTANT:
Use the anti-inflammatory eye drops and lubricants as directed by your doctor. Your surgical results depend upon your following your doctor's directions.

POTENTIAL RISKS WITH PRK:
The following adverse events and complications were reported in conjunction with the clinical studies conducted with the VISX Excimer Laser System for PRK.

Immediate/Early Post-treatment Complications
The following complications have been reported up to several weeks following PRK treatment. They are associated with the normal healing process after treatment, and include: pain (first 24 to 48 hours), feeling something is in your eye, tearing, light sensitivity, redness, itching/scratchiness, burning, dryness, headache, cloudy vision, corneal swelling and pupil enlargement. These symptoms are temporary and occur in many patients during the early period after treatment.

Long Term Post-treatment Adverse Events
The following is a list of the adverse events that occurred **in at least 1.0%** (the exact percentage is given in parentheses) of patients **at two years or later** after treatment:

- **Overcorrection (by more than 1 diopter):** Farsightedness, which may need to be corrected with glasses or contact lenses (1.0%).
- **Worsening of Best Spectacle Corrected Vision :** Significant worsening of vision in the operated eye with the help of glasses (1.3%).
- **Double Vision:** Shadows or ghost images around objects, judged by the patient to be worse than before the surgery (1.3%).
- **Sensitivity to Bright Lights:** Difficulty tolerating bright lights, judged by the patient to be worse than before the surgery (1.7%).
- **Increase in Astigmatism:** Uneven curving of the cornea of 1 or more diopters that may distort vision and require corrective glasses or contact lenses (2.9%).
- **Difficulty with Night Vision:** Difficulty performing visual tasks in low light or at night that are performed without difficulty during the day, judged by the patient to be worse than before the surgery (3.1%).
- **Increase in Intraocular Pressure:** Increase of pressure in the eye greater than 5 mm Hg that could, but may not necessarily, cause damage (3.6%).

The following complications occurred in less **than 1.0% of patients at two years or later after treatment:**

- **Overcorrection (by more than 2 diopters):** Farsightedness, which may need to be corrected by glasses or contact lenses.
- **Corneal Haze:** A scar or cloudy cornea surface that may affect vision.
- **Lens Abnormality:** Any cloudiness of the lens in the eye not noted before the surgery.

QUESTIONS TO ASK YOUR DOCTOR

You may want to ask the following questions to help you decide if PRK is right for you:

- What other options are available for correcting my nearsightedness?
- Will I have to limit my activities after surgery, and for how long?
- What are the benefits of PRK for my amount of nearsightedness?
- What vision can I expect in the first few months after surgery?
- If PRK does not correct my vision, what is the possibility that my glasses would need to be stronger than before? Could my need for glasses increase over time?
- Will I be able to wear contact lenses after PRK if I need them?
- How is PRK likely to affect my need to wear glasses or contact lenses as I get older?
- Will my cornea heal differently if injured after having PRK?
- Should I have PRK surgery in my other eye?
- How long will I have to wait before I can have surgery on my other eye?
- What vision problems might I experience if I have PRK only on one eye?

Discuss the cost of surgery and follow-up care requirements with your doctor, as laser treatment is not covered by most health insurance policies.

SELF-TEST

ARE YOU AN INFORMED AND EDUCATED PATIENT?

Take the test below and see if you can correctly answer these questions after reading this booklet.

	TRUE	FALSE
1. Excimer laser refractive surgery is risk free.	[ ]	[ ]
2. Excimer laser surgery is the same as radial keratotomy (RK).	[ ]	[ ]
3. It doesn't matter if I wear my contact lenses when my doctor told me not to.	[ ]	[ ]
4. The laser does all the work; I just have to lie on the chair.	[ ]	[ ]
5. After the surgery, there is a good chance that I will be less dependent on eye glasses.	[ ]	[ ]
6. I may need reading glasses after laser surgery.	[ ]	[ ]
7. There is a risk that I may lose some vision after laser surgery.	[ ]	[ ]
8. It doesn't matter if I am pregnant.	[ ]	[ ]
9. If I have an auto-immune disease, I am still a good candidate for PRK.	[ ]	[ ]

Answers to SELF-TEST are found at the bottom of page 11.

SUMMARY OF IMPORTANT INFORMATION

- **PRK is a permanent operation to the cornea and is irreversible.**
- **PRK does not eliminate the need for reading glasses, even if you never have worn them before.**
- **Your vision must be stable for at least one year before PRK surgery. You will need written evidence that your nearsightedness has changed less than 0.50 diopters.**
- **Pregnant and nursing women should wait until they are not nursing and not pregnant to have the surgery.**
- **You would not be a good candidate if you have degenerative or auto-immune diseases, or have a condition that makes wound healing difficult.**
- **PRK surgery may result in some discomfort. The surgery is not risk-free. Please read this entire booklet, especially the sections on Benefits and Risks before you agree to the surgery.**
- **PRK is not a laser version of radial keratotomy (RK). These operations are completely different from each other.**
- **Alternatives to PRK include, but are not limited to, glasses, contact lenses and RK.**
- **The vision requirements of some occupations, such as military pilots, cannot be met by having RK or PRK.**
- **Before considering PRK surgery you should:**

  a. **Have a complete eye examination.**
  b. **Talk with one or more eye care professionals about the potential benefits of PRK surgery, and the complications, risks, and time required for healing.**

Answers to Self-Test Questions:
1. False (see Risks on page 3); 2. False (see What is PRK? on page 2); 3. False (see Before The Surgery on page 6); 4. False (see The Day of Surgery on page 6); 5. True (see Benefits on page 3); 6. True (see What is PRK? on page 2); 7. True (see Risks on page 3); 8. False (see Contraindications on page 4); 9. False (see Contraindications on page 4).

PATIENT ASSISTANCE INFORMATION

PRIMARY EYE CARE PROFESSIONAL

Name: _____

Address: _____

Phone: _____

PRK DOCTOR

Name: _____

Address: _____

Phone: _____

TREATMENT LOCATION

Name: _____

Address: _____

Phone: _____

LASER MANUFACTURER:

VISX, Incorporated
3400 Central Expressway
Santa Clara, CA 95051
U.S.A.

Tel: (408) 733-2020

VISX™ EXCIMER LASER SYSTEM

PROFESSIONAL USE INFORMATION

PHOTOREFRACTIVE KERATECTOMY (PRK)

RESTRICTED DEVICE: U.S. Federal Law restricts this device to sale, distribution, and use by or on the order of a physician or other licensed eye care practitioner. U.S. Federal Law restricts the use of this device to practitioners who have been trained in its calibration and operation, and who have experience in the surgical management and treatment of refractive errors.

This document provides information concerning the intended clinical use of the VISX Excimer Laser System. For complete information concerning system components, safety instructions, installation, maintenance, and troubleshooting, refer to the VISX Excimer Laser System *Operator's Manual.*

Carefully read all instructions prior to use. Observe all contraindications, warnings, and precautions noted in these instructions. Failure to do so may result in patient and/or user complications.

VISX, INCORPORATED
3400 CENTRAL EXPRESSWAY
SANTA CLARA, CA 95051-0703

PHONE (408) 733-2020

Copyright 1996 by VISX, Incorporated
All Rights Reserved

VISX ™ is a trademark of VISX, Incorporated.
VisionKey ® is a registered trademark of VISX, Incorporated.

The VISX Reader/Writer utilizes software owned by LaserCard Systems Corporation

No part of this publication may be reproduced or transmitted in any form or by any means, electronic or mechanical, including photocopying, recording, or any information storage and retrieval system, without permission in writing from VISX, Incorporated.

REVISION RECORD

*Revision	Description	Date	ECN #
A	Product Release	11/22/95	4113
B	Updates	2/24/96	5082
C	Revision incorporates PRK for Models B & C	3/29/96	5177
D	Updates	6/3/96	5300
E	Reformat		

* Sections contained in this manual may be revised individually; thus, the section footer may not reflect the latest revision level. Several sections may also be revised at the same time, and included on one Engineering Change Notice (ECN). If this occurs, the revision level may skip on some sections to the latest revision letter.

* Revisions to sections identified by individual part numbers (which may be incorporated into the sections of this manual) are not noted on the revision grid above, and are contained herein for reference only.

This page left blank intentionally.

TABLE OF CONTENTS

Chapter	Title	Page
1.0	**DEVICE DESCRIPTION**	**1.1**
1.1	General	1.1
2.0	**INDICATIONS, CONTRAINDICATIONS, WARNINGS, PRECAUTIONS AND ADVERSE EVENTS**	**2.1**
2.1	Indications For Use	2.1
2.2	Contraindications	2.1
2.3	Warnings	2.1
2.4	Precautions	2.2
2.4.1	General	2.2
2.4.2	Patient Selection	2.2
2.4.3	Procedure	2.3
2.4.4	Post-Procedure	2.3
2.5	Adverse Events	2.4
3.0	**CLINICAL RESULTS**	**3.1**
3.1	Introduction	3.1
3.2	About The Study	3.1
3.3	Patient Accountability	3.2
3.4	Data Analysis And Results	3.2
3.4.1	Pre-Operative Characteristics	3.2
3.4.2	Post-Operative Results	3.3
3.2.4.1	Efficacy Results	3.3
3.2.4.2	Stability of Outcome	3.6
3.4.3	Adverse Events	3.9
3.4.4	Retreatments	3.11
3.4.5	Re-Epithelialization	3.14
3.4.6	Topographic Analysis/Central Islands	3.14
3.4.7	Endothelial Cells	3.14
3.4.8	Pain	3.14
3.5	Conclusions	3.15
3.5.1	Safety	3.15
3.5.2	Effectiveness	3.15
4.0	**SURGICAL PLANNING AND PROCEDURES**	**4.1**
4.1	Introduction	4.1
4.2	Pre-Operative (Examination Of The Patient)	4.1
4.3	Peri-Operative	4.1
4.3.1	Anesthesia And Analgesia	4.1
4.4	Intra-Operative	4.1
4.4.1	Epithelial Removal - Initial Treatment	4.1
4.4.2	Epithelial Removal - Secondary Treatment	4.2
4.4.2.1	Mechanical Epitheial Removal Technique	4.2
4.4.2.2	Laser/Scrape Technique	4.2
4.5	Post-Operative	4.2
4.5.1	Patching And Antibiotics	4.2
4.5.2	Handling Complications	4.3

TABLE OF CONTENTS (CONT'D)

Chapter	Title	Page
5.0	**VISX EXCIMER LASER SURGICAL PROCEDURES**	**5.1**
5.1	Step-by-Step procedure	5.1
6.0	**EMERGENCY STOP**	**6.1**
6.1	General	6.1

LIST OF ILLUSTRATIONS

Figure	Title	Page
3-1	Mean Line Improvement in UCVA from Pretreatment	3.7
3-2	Spherical Equivalent by Months	3.8

Table	Title	Page
2-1	Summary of Adverse Events	2.5
3-1	Pre-Operative UCVA	3.2
3-2	Pre-Operative BSCVA	3.2
3-3	Pre-Operative Myopia/Spherical Equivalent	3.2
3-4	Efficacy	3.4
3-5	Uncorrected Visual Acuity (UCVA)	3.3
3-6	Reduction of Myopia	3.5
3-7	Deviation from Intended Correction	3.6
3-8	Reduction in BSCVA	3.9
3-9	Summary of Retreatment	3.11
3-10	UCVA in Retreatment Cases	3.12
3-11	BSCVA in Retreatment Cases	3.12
3-12	Spherical Equivalent in Retreatment Cases	3.13
3-13	Haze in Retreatment Cases	3.13
3-14	Pain During Re-epithelialization	3.14

GENERAL WARNINGS

ICON & DEFINITION

WARNING! Identifies conditions or practices that could result in damage to equipment or other property, personal injury, or loss of life.

NOTE: Identifies conditions or practices warranting special attention.

WARNINGS

WARNING! RESTRICTED DEVICE: U.S. Federal Law restricts this device to sale, distribution, and use by or on the order of a physician or other licensed eye care practitioner. U.S. Federal Law restricts the use of this device to practitioners who have been trained in its calibration and operation, and who have experience in the surgical management and treatment of refractive errors.

WARNING! Performance of procedures, use of controls, or any other adjustments other than those specified herein may result in a hazardous condition.

WARNING! Never operate the laser in the presence of flammable anesthetics or other volatile substances, such as alcohol.

WARNING! All patients must be given the opportunity to read and understand the Patient Information Booklet, and to have all their questions answered to their satisfaction before giving consent for Photorefractive Keratectomy (PRK) surgery.

WARNING! GAS HANDLING: High pressure gas cylinders are contained in a protected compartment within the VISX Excimer Laser System. Storage of additional cylinders and the replacement of used cylinders must be done in accordance with the Safe Operating Procedures outlined in the *Operator's Manual* (Section 3.7, Chapter 3).

The premix (argon/fluorine) gas mixture used in this laser system is highly toxic. VISX, Incorporated recommends that anyone working with the gas cylinders: 1) be trained in the proper handling of toxic and compressed gases, 2) know the location of the emergency exhaust fan/room purifier switch, 3) have easy access to protective respirators, and 4) be familiar with safety procedures provided by the site's safety officer. Gas discharge into the atmosphere may be evidenced by a sharp, penetrating odor, and eye, nose, and throat irritation.

WARNING! SKIN AND EYE EXPOSURE: The VISX Excimer Laser System contains a Class IV laser with an output at 193 nm, which is potentially hazardous to the skin and the surface layers of the cornea. This laser radiation will not enter the eye and poses no threat to retinal structures or the crystalline lens. The fixed optical system restricts the beam path which is bounded by the operating table or the floor. Reflectivity from objects in operating rooms, including surgical instruments, is extremely low for 193 nm radiation.

The area of potential hazard (Nominal Hazard Zone) for production of a photochemical keratitis has been determined to be less than 40 cm from the primary beam. All healthcare personnel should avoid direct exposure to the skin or eye by the primary beam. While no hazard may exist further than 40 cm from the beam, the use of protective eyewear is recommended if the possibility exists that healthcare personnel will approach closer than this distance from the primary beam.

SECTION 1.0 - DEVICE DESCRIPTION

1.1 GENERAL

The VISX Excimer Laser System is designed to create a superficial lamellar keratectomy on exposed corneal tissue. Corneal tissue is removed by a process known as *Ablative Photodecomposition.* Ablative Photodecomposition occurs when far-ultraviolet radiation reacts with organic molecules, resulting in the photochemical breakdown of the molecular bonds without a significant local thermal effect. The source of the far-ultraviolet photons is a high efficiency, gas discharge excimer laser that electronically excites a combination of argon and fluorine, producing an ultraviolet wavelength of 193 nm.

Features and components of the VISX Excimer Laser System include:

Excimer Laser	An argon-fluoride excimer laser module, with an output wavelength of 193 nm.
Gas Management System	A gas cabinet containing a working gas cylinder for laser operation; a gas cleaning system; a gas leak audio alarm with a sensor to detect fluorine (one part-per-million); a gas discharge system, using an activated charcoal filter to absorb fluorine; an emergency safety system using a positive-action solenoid safety valve, which automatically seals the premix cylinder in the event of a power failure; and a second charcoal scrubber to neutralize fluorine in case of a leak.
Laser Beam Delivery System	Beam shaping and homogenizing optics designed to produce a uniform, coaxial beam profile; a spatial integrator and beam rotator for temporal integration; and an iris diaphragm and rotating slit blades used to shape the beam.
Patient Management System	An operating microscope with reticle, used to observe a patient procedure and to facilitate accurate focus and laser beam alignment; a debris-removal system designed to evacuate the debris plume that occurs during ablation; a patient operating chair used to align the patient for treatment; a video camera and monitor used to record and monitor patient treatment; an illumination device used to illuminate the patient's eye for observation and treatment; and a fixation LED used by the patient to maintain proper alignment during treatment.
Computer Control	An IBM-compatible computer and video monitor; a computer keyboard with trackball

(MODEL C) or mouse (MODEL B) for user interface; a printer; a VisionKey card driver; and system software.

VisionKey Card

A write-once-read-many (WORM) optical memory card designed to allow compilation, storage, and printout of essential patient data and procedural information.

SECTION 2.0 - INDICATIONS, CONTRAINDICATIONS, WARNINGS, PRECAUTIONS AND ADVERSE EVENTS

2.1 INDICATIONS FOR USE

The Photorefractive Keratectomy (PRK) procedure using the VISX Excimer Laser System is intended for use:

- In PRK treatments for the reduction or elimination of mild to moderate myopia (nearsightedness) of between -1.0 to -6.0 D, spherical equivalent at the corneal plane, in patients with less than or equal to 1.0 D of astigmatism.
- In patients with documented evidence of a change in manifest refraction of less than or equal to 0.50 D (in both cylinder and sphere components) per year for at least 1 year prior to the date of pre-operative examination.
- In patients who are 18 years of age or older.

NOTE: Refer to the preceding General Warnings section of this *Professional Use Information Manual,* in addition to the warnings and precautions found in this section.

2.2 CONTRAINDICATIONS

PRK surgery should not be performed:

- In patients with collagen vascular, autoimmune or immunodeficiency diseases.
- In pregnant or nursing women.
- In patients with signs of keratoconus.
- In patients with a history of keloid formation.
- In patients who are taking one or both of the following medications:
  - isotretinoin (Accutane)
  - amiodarone hydrochloride (Cordarone)

2.3 WARNINGS

- Patients whose myopia is progressing at a rate greater than 0.5D per year should not have the PRK procedure.

- The decision to perform PRK surgery in patients with systemic disease likely to affect wound healing, such as connective tissue disease, diabetes, severe atopic disease or an immunocompromised status, should be approached cautiously. The safety and effectiveness of the VISX Excimer Laser System has not been established in patients with these conditions.

- PRK is not recommended in patients with *Herpes simplex* or *Herpes zoster*.

2.4 PRECAUTIONS

2.4.1 GENERAL

The safety and effectiveness of the VISX Excimer Laser System have not been established:

- In patients with progressive myopia, ocular disease, corneal abnormality, previous corneal surgery or trauma in the ablation zone.

- In patients with corneal neovascularization within 1.0 mm of the ablation zone.

- In patients under 18 years of age.

- Over the long term (more than 3 years after surgery).

Although the effects of PRK on visual performance under poor lighting conditions have not been determined, it is possible that you will find it more difficult than usual to see in conditions such as very dim light, rain, snow, fog or glare from bright lights at night.

2.4.2 PATIENT SELECTION

Consideration should be given to the following in determining the appropriate patients for PRK:

- Complete examination, including, but not limited to, cycloplegic evaluation, must be performed. The lens must be evaluated, especially in the older patient, to assure that nuclear sclerosis or any other lens opacity is not present prior to laser surgery. Myopic patients will have a higher incidence of retinal pathology, and indirect ophthalmoscopy through a dilated pupil is essential.

- To obtain accurate refractive information, contact lens wearers must be examined after a period of abstinence from contact lens use for at least 2 weeks for soft lenses and at least 3 weeks for hard lenses. Prior to treatment and after at least 3 weeks of contact lens abstinence, patients who wear rigid gas permeable or hard (PMMA) lenses must have 3 central keratometry readings and manifest refractions taken at 1 week intervals, the last 2 of which must not differ by more than 0.50 diopter in either meridian. All mires must be regular. Any patient with keratometry or a clinical

picture which is suggestive of keratoconus is specifically contraindicated as described above.

- Glaucoma is more common in myopic patients than in the general population. Evaluation of the optic nerve and measurement of the intraocular pressure are necessary. If there are any concerns regarding the appearance of the optic nerve, a Humphrey 24-2 Fastpac or equivalent threshold test of the visual field should be performed. If elevated intraocular pressure and/or evidence of glaucomatous damage are found, topical steroids should only be used with careful medical supervision or the patient should not undergo PRK surgery.

- Pre-operative corneal mapping is essential on all patients to exclude topographical abnormalities. This is especially important when astigmatism or steep keratometry readings are present, which may indicate the presence of keratoconus or other irregularities.

- Baseline evaluation of patients requesting refractive surgery should be performed within 30 days of the PRK surgery.

- The patient should have the ability to tolerate local or topical anesthesia.

- The patient should have the ability to lie flat without difficulty.

- The patient should be able to fixate steadily and accurately for the duration of the PRK procedure.

- The patient must be able to understand and give an informed consent.

- In patients who have been clearly informed of all alternatives for the correction of their myopia including but not limited to spectacles, contact lenses and other refractive surgeries such as radial keratotomy.

2.4.3 PROCEDURE

The output of the laser is potentially hazardous only to the skin and the surface layers of the cornea. This radiation has not been shown to pose a threat to retinal structures or the crystalline lens. The area of potential hazard (Nominal Hazard Zone) for production of a photochemical keratitis has been determined to be less than 40 cm from the primary beam. All healthcare personnel should avoid direct exposure to the skin or eye by the primary beam. While no hazard may exist further than 40 cm from the beam, the use of protective eyewear is recommended if the possibility exists that healthcare personnel will approach closer than this distance to the primary beam.

2.4.4 POST-PROCEDURE

A slit-lamp examination should be performed on a daily basis until re-epitheliali-zation is complete. After re-epithelialization, the following examinations are recommended at a schedule of at least 1, 3, 6, and 12 months:

- Uncorrected Visual Acuity (UCVA or VA-sc).
- Manifest refraction with the Best Spectacle Corrected Visual Acuity (BSCVA or VA-cc).
- Intraocular pressure (IOP).
- Slit-lamp examination, including corneal clarity evaluation.
- Videokeratography at 6 months (sooner only if unanticipated events occur during the healing process).
- If topical steroids are used post-operatively, patients should be monitored for development of possible steroid side-effects, including but not limited to ocular hypertension, glaucoma, and/or cataract.

2.5 ADVERSE EVENTS

Adverse events include: secondary surgical intervention, loss of best spectacle corrected visual acuity (BSCVA), lens abnormality, corneal edema, corneal infection (e.g., ulcer, infiltrate), corneal haze, glare, overcorrection, increased refractive cylinder, increased IOP post-treatment, and worsening of patient subjective symptoms.

Excimer laser energy has the potential to induce micromechanical damage to endothelial cells, induce cataracts, and cause mutations. These effects have not been observed in any clinical use, nor have they been reproducible in various animal and *in vitro* test systems.

There were no corneal perforations, intraocular infections, hyphemas, hypopyon, post treatment lens abnormalities with vision loss, persistent corneal decompensation/edema, or cystoid macular edema in clinical trials conducted in patients. The incidence of the other adverse event categories is shown in the following **Table 2-1** for 909 eyes treated with a 6.0 mm ablation zone.

Table 2-1

Summary of Adverse Events

Eyes Treated with 6.0 mm Ablation Zone

(n=909)✦

Adverse Event Description	1M (n=810)‡		3 to 6 M (n=846)‡		12M (n=520)‡		≥24M (n=542)‡	
	n	(%)	n	(%)	n	(%)	n	(%)
1. Loss ≥2 Lines of BSCVA	113	(14.3%)φ	50	(6.0%)φ	11	(2.2%)	1	(0.2%)
2. Pre-treatment BSCVA 20/20 or Better with Post-treatment BSCVA Worse than 20/25	114	(14.9%)φ	52	(6.4%)φ	10	(2.1%)φ	7	(1.3%)
3. Pre-treatment BSCVA 20/20 or Better with Post-treatment BSCVA Worse than 20/40	13	(1.7%)φ	7	(0.9%)φ	1	(0.2%)	0	(0.0%)
4. Overcorrection:								
>1D	88	(11.0%)φ	44	(5.2%)	6	(1.2%)	7	(1.3%)
>2D	24	(3.0%)	9	(1.1%)	1	(0.2%)	3	(0.6%)
5. Increase in Refractive Cylinder:								
≥1D	36	(4.5%)φ	46	(5.5%)	16	(3.1%)	16	(3.0%)
≥2D	2	(0.2%)	3	(0.4%)	0	(0.0%)	0	(0.0%)
6. Glare Testing: Abnormal (≥2 line loss in BSCVA with glare)	---	---	1	(1.0%)φ	1	(1.7%)φ	0	(0.0%)
7. Worsening of Patient Symptoms*:								
"Double Vision"	---	---	23	(2.7%)	8	(1.5%)	7	(1.3%)
"Sensitivity to Bright Lights"	---	---	35	(4.1%)	25	(4.8%)	16	(3.0%)
8. Difficulty with Night Vision**	---	---	41	(4.8%)	27	(5.2%)	21	(3.9%)
9. IOP Increase:								
> 5 mm Hg	35	(4.4%)φ	61	(7.3%)	9	(1.8%)φ	19	(3.6%)φ
>10 mm Hg	2	(0.3%)	7	(0.8%)	0	(0.0%)	0	(0.0%)
10. Corneal Haze ≥ grade 2	3	(0.4%)	11	(1.3%)	3	(0.6%)	1	(0.2%)
11. Corneal Infection/Ulcer/Infiltrate (none lost BSCVA)	3	(0.4%)	0	(0.0%)	0	(0.0%)	0	(0.0%)
12. Corneal Decompensation/Edema (nonpersistent)	1	(0.1%)	0	(0.0%)	0	(0.0%)	0	(0.0%)
13. Lens Abnormality Post-treatment◊	1	(0.1%)	2	(0.2%)	1	(0.2%)	3	(0.6%)
14. Secondary Surgical Intervention:								
Single Retreatments	0	(0.0%)	1	(0.1%)	22	(4.2%)	2	(0.4%)
Double Retreatments	0	(0.0%)	0	(0.0%)	0	(0.0%)	0	(0.0%)
Other Refractive Procedures	0	(0.0%)	4	(0.5%)	14	(2.7%)	9	(1.7%)

✦ Last Observation - Post-retreatment data not included.

‡ For all adverse events, percentages are given as:

$$\frac{\text{number of eyes with at least one occurrence observed at the specified study visit}}{\text{number of eyes examined at the specified study visit}}$$

◊ *Adverse Event #13: lens abnormality post-treatment counted by first occurrence.*

* Reflects number of patients who reported these symptoms occurring 'often or always' post-treatment and worse than pre-treatment.

** Reflects number of patients who reported this symptom as significantly worse than pre-treatment.

φ These values were calculated using an (n) value slightly smaller than the (n) shown in the column heading due to missing measurements.

This page left blank intentionally.

3.0 CLINICAL RESULTS

3.1 INTRODUCTION

A prospective, non-randomized, unmasked, multi-center clinical study was conducted to determine the safety and efficacy of PRK to improve uncorrected visual acuity and predictably reduce mild to moderate myopia (up to -6D). Eligibility criteria for patients included: being at least 18 years of age; eyes with 1 to 6D myopia spherical equivalent at the corneal plane with astigmatism less than or equal to 1D; best spectacle corrected visual acuity of 20/40 or better in both eyes; and a stable manifest refraction as documented by a 0.5D change or less within the previous 12 months. Contact lens wearers had to abstain from contact lens use prior to baseline examination (2 weeks for soft lenses, 3 weeks for hard lenses).

Patients who exhibited any of the following conditions were excluded: keratoconus; active ocular disease likely to affect wound healing; unstable central keratometry readings with irregularly shaped mires or corneascope photographs with broken central rings; use of systemic medications likely to affect wound healing; and patients who were immunocompromised.

3.2 ABOUT THE STUDY

The PRK study was conducted under an FDA Investigational Device Exemption. Nine hundred and nine (909) eyes treated at 6.0 mm comprised the cohort of eyes used for safety evaluations. These 909 eyes were treated between May 1992 and May 1995. Efficacy evaluations were done on 480 eyes from the 909 eye cohort. These 480 eyes were treated between May 1992 and October 1993 at nine participating centers. The patients were evaluated pre-operatively, every 24 to 48 hours post-operatively until re-epithelialization, and at 1, 3, 6, 12, 18, and 24 months post-treatment.

The patients' medical and ocular histories were recorded. Both pre- and post-operatively, the patients were asked whether they experienced any visual symptoms. Following surgery, satisfaction with the procedure was assessed periodically. Objective measurements included: uncorrected and best spectacle corrected visual acuity (UCVA and BSCVA), manifest refraction, keratometry, intraocular pressure (IOP), pachymetry, clinical assessment of corneal clarity (haze), the anterior chamber, vitreous, retina and lens, and assessment of complications or adverse events.

Additional post-operative evaluations were performed in subsets of subjects as follows: cycloplegic refraction, corneal topography, glare testing, contrast sensitivity, endothelial cell counts and visual fields.

Procedure effectiveness was evaluated based on improvement in visual acuity and reduction in mean spherical equivalent. Device effectiveness was evaluated in terms of the percent of cases experiencing a deviation from intended correction within 1D of the targeted correction. The stability of the refractive outcome through the post-operative evaluation period was also assessed.

3.3 PATIENT ACCOUNTABILITY

The cohort evaluated for safety was comprised of 909 eyes treated with a 6.0 mm ablation zone.

The cohort evaluated for efficacy was comprised of 480 eyes representing the subset of eyes that met the inclusion criteria and completed ≥2 years of follow-up.

3.4 DATA ANALYSIS AND RESULTS

3.4.1 PRE-OPERATIVE CHARACTERISTICS

Pre-operative characteristics are presented for 480 eyes treated with a 6.0 mm ablation zone and ≥ 2 years follow-up. (See Tables 3-1 through 3-3).

Table 3-1
Pre-Operative UCVA
(n=480)*

20/100 or Worse		20/50 to 20/80		20/25 to 20/40	
n	%	n	%	n	%
454	(94.6%)	24	(5.0%)	2	(0.4%)

*Percentages may not add to 100.0 due to rounding.

Table 3-2
Pre-Operative BSCVA
(n=480)*

20/40		20/30 to 20/25		20/20 or Better	
n	%	n	%	n	%
1	(0.2%)	13	(2.7%)	466	(97.1%)

*Percentages may not add to 100.0 due to rounding.

Table 3-3
Pre-Operative Myopia/Spherical Equivalent
(n=480)*

1 to <2D		2 to <3D		3 to <4D		4 to <5D		5 to 6D	
n	%	n	%	n	%	n	%	n	%
37	(7.7%)	75	(15.6%)	119	(24.8%)	128	(26.7%)	121	(25.2%)

*Percentages may not add to 100.0 due to rounding.

3.4.2 POST-OPERATIVE RESULTS

3.4.2.1 EFFICACY RESULTS

Efficacy data are presented for 480 eyes treated with a 6.0 mm ablation zone and ≥2 years follow-up

Table 3-4 presents a summary of efficacy results stratified by pre-treatment myopia. This table presents data based on the *Last Observed* (LO) data analysis. The LO analysis presents data from the initial treatment only, thus data for eyes after retreatment are excluded (NOTE: The effect of retreatment is described in Section 3.4.4.).

This efficacy table indicates that in general, for each of the effectiveness parameters, the success is better in eyes with lower pre-treatment myopia.

Additional information concerning efficacy parameters evaluated (again based on the LO analysis) is provided in the discussion that follows.

3.4.2.1.1 UNCORRECTED VISUAL ACUITY (UCVA)

Table 3-5 shows the distribution of uncorrected visual acuity, pretreatment and post-treatment. Pre-operatively, 0.4% of eyes had a UCVA better than or equal to 20/40. At 1 month after treatment 32.3% of the eyes had a UCVA of 20/20 or better, and 89.7% were 20/40 or better. At 2 years or more post-treatment, 58.3% of the patients were 20/20 or better and 93.8% were 20/40 or better.

Table 3-5
Uncorrected Visual Acuity (UCVA)
(n=480)

Visual Acuity	Preop n=480		1M n=436		3M n=415		6M n=421		12M n=344		18M n=294		≥24M n=480	
	n	(%)	n	(%)	n	(%)	n	(%)	n	(%)	n	(%)	n	(%)
20/20 or Better	0	(0.0%)	141	(32.3%)	187	(45.1%)	235	(55.8%)	219	(63.7%)	193	(65.6%)	280	(58.3%)
20/25 - 20/40	2	(0.4%)	250	(57.3%)	197	(47.5%)	163	(38.7%)	108	(31.4%)	87	(29.6%)	170	(35.4%)
20/50 - 20/80	24	(5.0%)	40	(9.2%)	28	(6.7%)	23	(5.5%)	16	(4.7%)	13	(4.4%)	28	(5.8%)
20/100 or Worse	454	(94.6%)	5	(1.1%)	3	(0.7%)	0	(0.0%)	1	(0.3%)	1	(0.3%)	2	(0.4%)

Table 3-4
Efficacy
6.0 mm Ablation Zone, ≥ 2 Years Follow-up**
***First Treatment Only* (Last Observed)**
(n=480)

Pre-treatment Myopia	1 to <2D (n=37 Eyes)		2 to <3D (n=75 Eyes)		3 to <4 D (n=119 Eyes)		4 to <5D (n=128 Eyes)		5 to 6D (n=121 Eyes)		ALL (n=480 Eyes)	
Efficacy Parameter	n	%	n	%	n	%	n	%	n	%	n	%
(1) UCVA 20/20 or Better (Pre-treatment: N=0)	26	70.3%	51	68.0%	66	55.5%	77	60.2%	60	49.6%	280	58.3%
(2) UCVA 20/25 or Better (Pre-treatment: N=0)	32	86.5%	63	84.0%	92	77.3%	103	80.5%	93	76.9%	383	79.8%
(3) UCVA 20/40 or Better (Pre-treatment: N=2)	35	94.6%	72	96.0%	110	92.4%	121	94.5%	112	92.6%	450	93.8%
(4) Dev. From Intended Within +/-1D	33	91.7%φ	69	92.0%	111	93.3%	113	88.3%	106	87.6%	432*	90.2%φ
(5) Dev. From Intended ≤+1D (Not Overcorrected)	36	100.0%φ	74	98.7%	119	100.0%	127	99.2%	118	97.5%	474*	99.0%φ
(6) Dev. From Intended ≥-1D (Not Undercorrected)	33	91.7%φ	70	93.3%	111	93.3%	114	89.1%	109	90.1%	437*	91.2%φ
(7) Cases with BSCVA 20/20 or Better *Pre-treatment* and UCVA of 20/25 or Better AND a Spherical Equivalent Between -1.0D and +0.5D *Post-treatment*	30	85.7%φ	61	82.4%φ	86	74.8%φ	95	76.0%φ	87	75.7%φ	359*♦	77.4%φ
(8) Spherical Equivalent >+1D	0	0.0%	0	0.0%	0	0.0%	0	0.0%	1	0.8%	1*	0.2%

* One patient did not stay to have refractive exam.
♦ 15 other eyes had pre-treatment BSCVA worse than 20/20.
** Follow-up based upon eyes treated on or before 10/20/93.
φ These values were calculated using an (n) value slightly smaller than the (n) shown in the column heading due to missing measurements.

3.4.2.1.2 REDUCTION OF MYOPIA

In **Table 3-6**, the spherical equivalent data (based upon manifest refraction) demonstrates the reduction of myopia, with most cases near emmetropia (defined as a spherical equivalent within ±1D of intended) post-treatment. At 1 month post-treatment, 86.9% of the eyes were ±1D and at ≥24 months post-treatment this percentage had increased to 90.8%.

There is an initial hyperopic overshoot in some cases at 1 month post-treatment (10.6% of eyes had a spherical equivalent of ≥+1D). However, there is a statistically significant decrease of this effect at 1 and 2 years post-treatment (1.2% and 0.4% of eyes, respectively, remained ≥+1D).

Table 3-6
Reduction of Myopia
(n=480)

Spherical Equivalent	Preop n=480		1M n=434		3M n=411		6M n=419		12M n=342		18M n=294		≥24M n=479*	
	n	(%)	n	(%)	n	(%)	n	(%)	n	(%)	n	(%)	n	(%)
Myopia ≥3D	368	(76.7%)	1	(0.2%)	2	(0.5%)	4	(1.0%)	1	(0.3%)	1	(0.3%)	1	(0.2%)
Myopia 2 to <3D	75	(15.6%)	3	(0.7%)	7	(1.7%)	3	(0.7%)	1	(0.3%)	2	(0.7%)	3	(0.6%)
Myopia 1 to <2D	37	(7.7%)	30	(6.9%)	41	(10.0%)	34	(8.1%)	42	(12.3%)	33	(11.2%)	61	(12.7%)
0.5D	0	(0.0%)	297	(68.4%)	286	(69.6%)	300	(71.6%)	254	(74.3%)	214	(72.8%)	339	(70.8%)
± 1D	1	(0.2%)	377	(86.9%)	370	(90.0%)	387	(92.4%)	309	(90.4%)	269	(91.5%)	435	(90.8%)
Hyperopia 1 to <2D	0	(0.0%)	37	(8.5%)	10	(2.4%)	7	(1.7%)	3	(0.9%)	2	(0.7%)	2	(0.4%)
Hyperopia 2 to <3D	0	(0.0%)	7	(1.6%)	3	(0.7%)	1	(0.2%)	1	(0.3%)	0	(0.0%)	0	(0.0%)
Hyperopia ≥3D	0	(0.0%)	2	(0.5%)	0	(0.0%)	0	(0.0%)	0	(0.0%)	0	(0.0%)	0	(0.0%)

*One patient did not stay to have refractive exam.

3.4.2.1.3 DEVIATION FROM INTENDED CORRECTION (PREDICTABILITY OF OUTCOME)

In **Table 3-7**, the predictability of outcome has been assessed as the extent of deviation from intended correction (i.e., difference between achieved correction and intended correction). The intended final refractive error may not have been plano in certain cases (i.e., intended undercorrection for monovision). The percent of cases within ±0.5D and ±1D, respectively, of attempted correction remains relatively stable throughout the 24 month period. At 2 or more years, 90.2% of cases were within ±1D of attempted correction.

Table 3-7
Deviation From Intended Correction
(n=480)

Diopter	1M n=434		3M n=411		6M n=419		12M n=342		18M n=294		≥24M n=479*	
	n	(%)	n	(%)	n	(%)	n	(%)	n	(%)	n	(%)
± 0.5D	261	(60.1%)	265	(64.5%)	288	(68.7%)	233	(68.1%)	203	(69.0%)	309	(64.5%)
± 1D	363	(83.6%)	362	(88.1%)	384	(91.6%)	310	(91.6%)	270	(91.8%)	432	(90.2%)

*One patient did not stay to have refractive exam.

3.4.2.2 STABILITY OF OUTCOME

Long-term stability of visual outcome has been assessed using the data from 147 of the 480 eyes evaluated for efficacy that have visual outcome data available at each of the 12, 18, and 24 month time points following initial treatment. This subgroup of eyes was selected so as to eliminate bias that could result from missed follow-up during each examination period.

Stability of mean line improvement in UCVA and mean deviation from intended correction between the 12 to 18 month, 18 to 24 month, and 12 to 24 month time periods were assessed to evaluate stability of the visual and refractive outcome. Stability of mean line improvement in UCVA following PRK with the VISX Excimer Laser System is presented in **Figure 3-1**. There are no statistically significant differences in mean lines improved between any of the time periods assessed ($p>0.75$). Therefore, the mean line improvement in UCVA following treatment with the VISX Excimer Laser System remains stable over the 12, 18, and 24 month periods. When all eyes evaluated at each visit are plotted, the curve is not statistically significantly different.

Figure 3-1
Mean Line Improvement in UCVA From Pretreatment
By Time Period
(n=147)

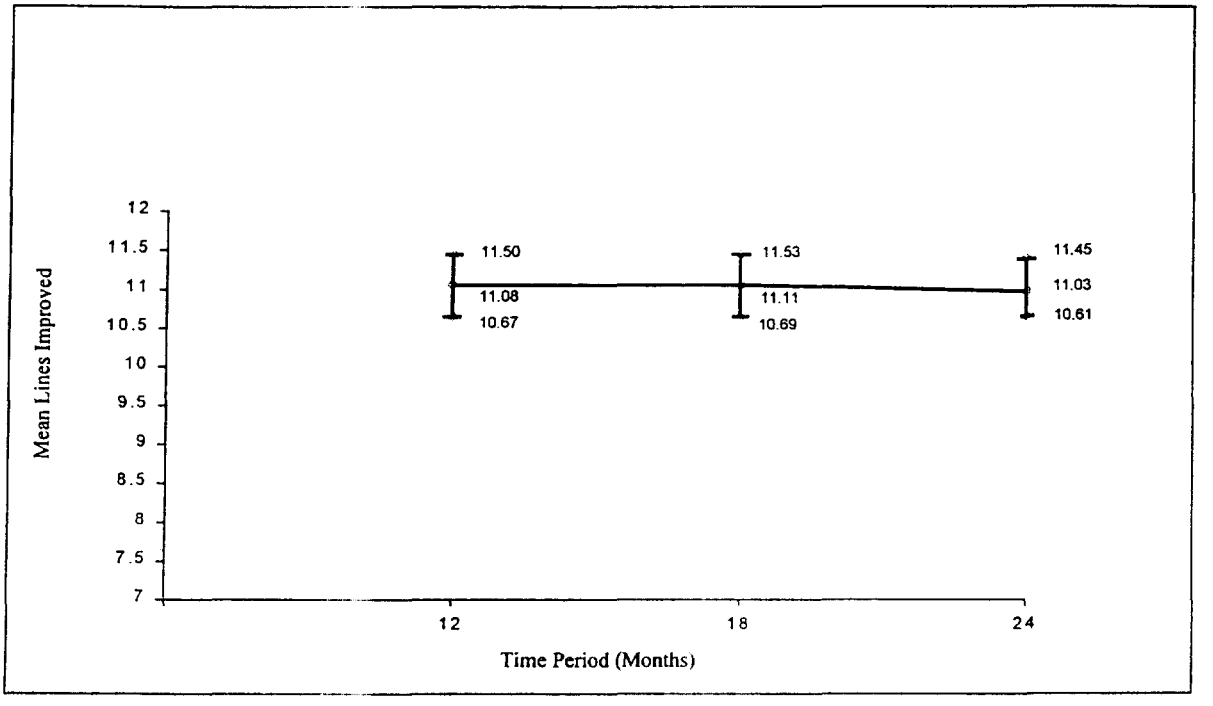

Stability of mean line improvement in UCVA. Cases included have data available at each of the 12, 18, and 24 month time periods. Vertical bars represent ±2 standard error of the mean.

Stability of the mean spherical equivalent **(Figure 3-2)** has been assessed using the data from 126 of the 480 eyes evaluated for efficacy that have visual outcome data available at each of the 1, 3, 6, 12, 18, and 24 month time points following initial treatment. Results of this analysis show that the mean preoperative refractive error of -4.07D was reduced to almost plano (0.08D) at 1 month following treatment. At 3 months the mean myopia is 0.19D and remains unchanged at 6, 12, 18 and 24 months. There is no statistically significant difference in the amount of myopia at each follow-up period ($p>0.15$). Therefore, the stability of spherical equivalent following PRK with the VISX Excimer Laser System remains stable over the 6 to 24 month period. When all eyes evaluated at each visit are plotted, the curve is not statistically significantly different.

Figure 3-2
Spherical Equivalent by Months
6.0 mm Ablation Zone, Pre-Treatment Myopia (1 to 6D)
First Treatment Only
(n=126)

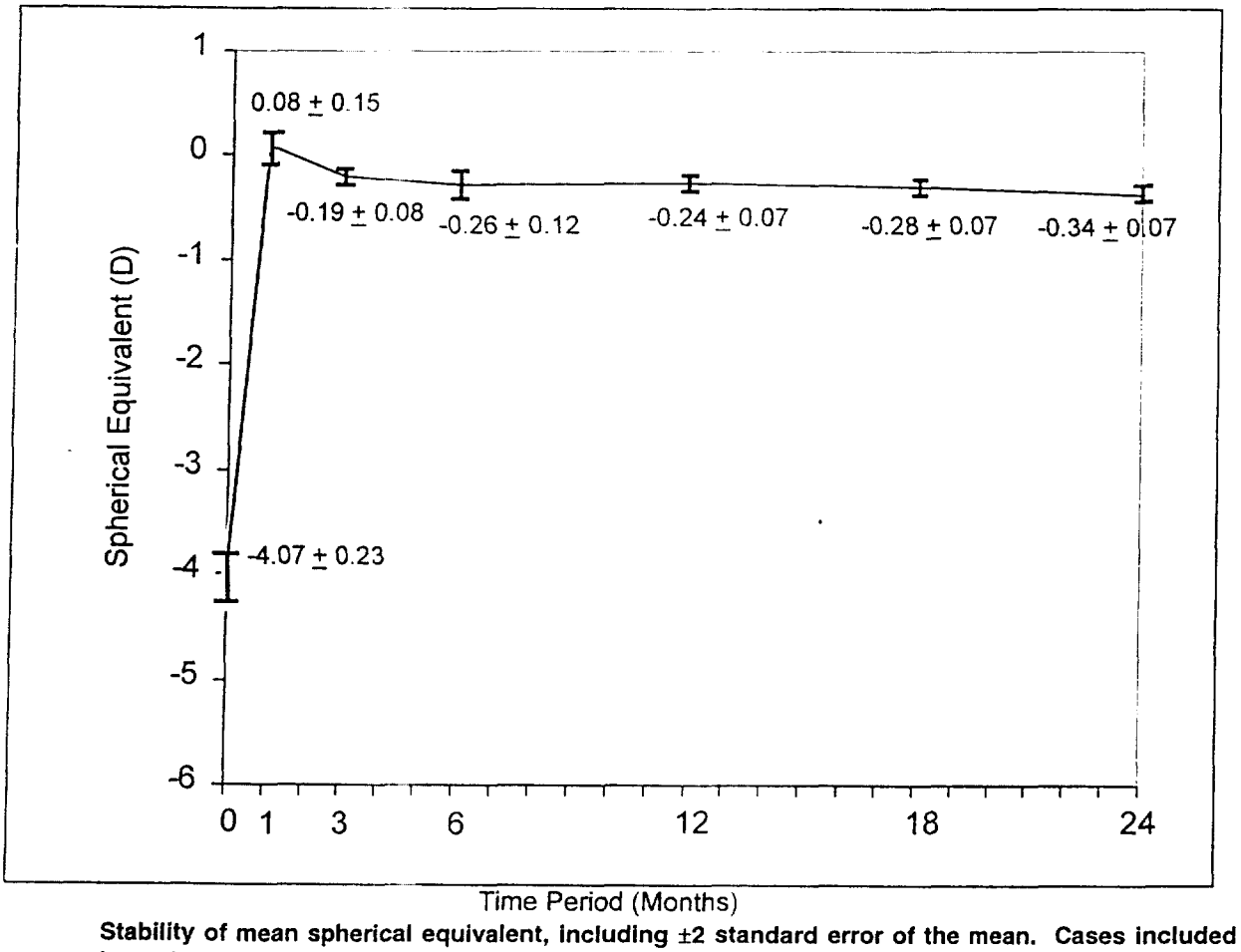

Stability of mean spherical equivalent, including ±2 standard error of the mean. Cases included have data available at each of the 1, 3, 6, 12, 18 and 24 month time periods.

Myopic shift (regression of effect) has also been assessed using the data from 126 (of 480) eyes that had data available at pretreatment, 1, 3, 6, 12, 18 and 24 months. Myopic shift based on mean spherical equivalent over time during the follow-up period is not statistically significant (p>0.15). Although 43/247 eyes (17.4%) had a myopic shift ≥ 0.5D from 12 to 24 months, only 7/247 (2.8%) of those eyes had a myopic shift of ≥ 1D. Further discussion of myopic shift as it relates to retreatment is presented in Section 3.4.4.

3.4.3 ADVERSE EVENTS

The analysis of safety during the clinical trials includes eyes treated with a 6.0 mm ablation zone. There were 909 eyes in this treatment group; all patients who returned for follow-up were evaluated for the occurrence of adverse events. The results are summarized in **Table 2-1**.

The incidence of adverse events reported in the study were tabulated at 1, 3-6, 12 and ≥24 months post-treatment. Adverse events are calculated as the percentage of occurrences observed at each time period out of all eyes examined during that time period.

Visual Acuity. **Table 3-8** details the loss in BSCVA over time after treatment. The most accurate parameter to assess visual outcome as it pertains to patient safety is the number of eyes with a loss of BSCVA. Only one eye (0.2%) had a BSCVA loss of ≥2 lines at 2 years post-treatment. Of those patients with a pre-treatment BSCVA of 20/20 or better, only 1.3% had a post-treatment BSCVA of worse than 20/25 and none had a BSCVA worse than 20/40 at ≥2 years **(See Table 2-1).**

Table 3-8
Reduction in BSCVA
(n=909)

BSCVA Line Change	Preop (n=909)		1M (n=792)		3M (n=737)		6M (n=746)		12M (n=511)		18M (n=388)		24M (n=328)	
	n	(%)	n	(%)	n	(%)	n	(%)	n	(%)	n	(%)	n	(%)
Loss, >2 Lines	0	(0.0%)	44	(5.6%)	12	(1.6%)	5	(0.7%)	2	(0.4%)	1	(0.3%)	0	(0.0%)
Loss, 2 Lines	0	(0.0%)	69	(8.7%)	28	(3.8%)	12	(1.6%)	9	(1.8%)	1	(0.3%)	1	(0.3%)
Loss, 1 Line	0	(0.0%)	191	(24.1%)	136	(18.5%)	100	(13.4%)	50	(9.8%)	47	(12.1%)	28	(8.5%)

Overcorrection. Overcorrection was assessed in 2 degrees: >1D and >2D. Overcorrection of eyes was reported with the greatest frequency at the 1 month visit, since healing and refractive changes are common during the first 3 to 6 months post-treatment. The long term refractive status of eyes resulting in an overcorrection of >1D as seen at 2 years or later was 1.3% (7/540) with only 3/540 (0.6%) overcorrected by >2D.

Increase in Refractive Cylinder. The refractive status of eyes was assessed at 1, 3, 6, 12, 18 and ≥24 months. An increase in refractive cylinder of ≥1D and ≥2D were considered significant. Less than 1% of eyes were noted to have an increase of ≥2D during any exam period and no eyes had an increase of ≥2D at 1 or 2 years or later. Between 3.1% and 5.4% of eyes were reported to have an increase of ≥1D of refractive cylinder at each of the post-operative time periods.

Glare Testing. The results of glare tests were considered abnormal if there was a ≥2 line loss of BSCVA under moderate glare conditions with the Brightness Acuity Test (BAT). Glare tests were administered at 6 months and every 6 months thereafter. Abnormal glare testing was reported on 1.6% of eyes at 1 year and 0% at 2 years or later.

Visual Symptoms. Subjective evaluation of visual symptoms were obtained by the use of a self-administered patient questionnaire at the 6, 12, 18 and 24 month exams. Evaluation of symptoms was assessed by comparison to each patient's pre-operative questionnaire and/or the information provided in the follow-up questionnaire.

Among the symptoms surveyed, *Double Vision* and *Sensitivity to Bright Lights* were considered "worsened" when comparison to baseline yielded a change from 'never or rarely' to 'often or always' and/or the patient noted a significant worsening from the pretreatment. These symptoms are expressed as the number of responses that were reported as worsened at each time period. When considered across all eyes at 2 years or later, patients reported significant worsening of *Double Vision* and *Sensitivity to Bright Lights* 1.3% and 3.0% of the time, respectively.

Difficulty with Night Vision was considered as "worsened" when comparison to baseline yielded a change from 'not present' to 'present' and/or the patient noted a significant worsening from pretreatment. When considered across all eyes at 2 years or later, patients reported significant worsening of *Difficulty with Night Vision* 3.9% of the time.

Intraocular Pressure (IOP). Since the recommended post-operative regimen included the use of topical steroids, IOP was monitored at baseline and each post-op visit starting at 1 month. Increases of >5 or >10 mm Hg were reported. Such increases include IOP measurements that, while they may have changed >5 or >10 mm Hg, still did not rise above 20 mm Hg. Less than 1% of eyes demonstrated an increase of >10 mm Hg at any time period post-treatment. Increases of >5 mm Hg were reported in 1.8% to 7.2% of eyes evaluated, regardless of the post-operative period.

Corneal Haze. Corneal haze was considered a complication of surgery if recorded as ≥ grade 2. As defined in the protocol, grade 2 is moderate haze which made refraction possible, but difficult. A haze grade of ≥2 was more frequently reported (1.3%) during the intermediate post-operative period (3 to 6 months), as compared to 0.2% at ≥ 2 years post treatment.

Corneal and Other Ocular Events. One eye (0.1%) experienced transient (non-persistent) corneal edema, and corneal infection/ulcer/infiltrate was reported in three eyes (0.4%). All 4 incidents occurred during the first 1 week post-operative period. None of these patients suffered a loss of BSCVA after appropriate antibiotic

treatment and resolution of the event. There were no incidences of the following potential adverse events: lens abnormalities with vision loss, corneal perforations, intraocular infection, persistent corneal edema, hyphema, hypopyon, or cystoid macular edema.

Lens Abnormalities. Less than 1% of eyes experienced lens abnormalities at any time during the study, which were not present pre-treatment; however, none of these eyes suffered a two line BSCVA loss or BSCVA loss to worse than 20/25-1 at the last exam. Only three (0.6%) of these eyes were noted to have lens abnormalities at 2 years or later post-operatively. A total of seven eyes had lens abnormalities that were not seen on subsequent exams.

Secondary Surgical Intervention. Of the 909 eyes treated, 5/846 (0.6%) had another refractive procedure at 3 to 6 months, 36/520 (6.9%) at 1 year, and 11/542 (2.0%) at 2 years or more post-treatment. Laser retreatment rates and clinical outcomes are discussed in Section 3.4.4.

3.4.4 RETREATMENTS

Retreatment data are presented for the initial cohort of the 909 eyes treated with a 6.0 mm ablation zone. Patients were eligible for retreatment after 6 months of follow-up. Thirty-three eyes (3.6%) were retreated. The data analyses for retreatment are presented in **Table 3-9** through **Table 3-13.**

Table 3-9
Summary of Retreatment
(n=909)

Reason for Retreatment	Number of Eyes	Percentage of Retreated Eyes (n=33)	Percentage of All Eyes (n=909)
Regression*	9	27.3%	1.0%
Undercorrection**	12	36.4%	1.3%
Regression w/Haze	5	15.2%	0.6%
Undercorrection w/Regression and Haze***	3	9.1%	0.3%
Other: Decentered Ablation, Haze, Induced Cylinder	4	12.1%	0.4%
Total	33	100.0%	3.6%

* Regression: a myopic change in spherical equivalent of more than 0.5D.
** Undercorrection: deviation from intended correction of ≤0.5D.
*** Haze: a grade of ≥1 at any time prior to retreatment.

Table 3-10
UCVA in Retreatment Cases
(n=33)*

UCVA	Pre-Treatment		Before Retreatment		After Retreatment	
	n	(%)	n	(%)	n	(%)
Better than 20/20	0	(0.0%)	0	(0.0%)	2	(7.1%)
20/20-20/40	0	(0.0%)	0	(0.0%)	20	(71.4%)
20/50-20/80	0	(0.0%)	28	(84.8%)	4	(14.3%)
20/100 or worse	33	(100.0%)	5	(15.2%)	2	(7.1%)
Total	33	(100.0%)	33	(100.0%)	28**	(100.0%)

* Represents 33/909 (3.6%) of eyes requiring retreatment.
**5 eyes did not have a visit ≥6 months after retreatment.

Table 3-11
BSCVA in Retreatment Cases
(n=33)*

BSCVA	Pre-Treatment		Before Retreatment		After Retreatment	
	n	(%)	n	(%)	n	(%)
Better than 20/20	4	(12.1%)	2	(6.1%)	4	(14.8%)
20/20	27	(81.8%)	21	(63.6%)	18	(66.7%)
20/25	2	(6.1%)	5	(15.2%)	4	(14.8%)
20/30	0	(0.0%)	4	(12.1%)	0	(0.0%)
20/40	0	(0.0%)	0	(0.0%)	1	(3.7%)
20/50	0	(0.0%)	1	(3.0%)	0	(0.0%)
Total	33	(100.0%)	33	(100.0%)	27**	(100.0%)

* Represents 33/909 (3.6%) of eyes requiring retreatment.
** 5 eyes did not have visit ≥6 months after retreatment. One eye had missing BSCVA at the visit after retreatment.

Table 3-12
Spherical Equivalent in Retreatment Cases
(n=33)*

Spherical Equivalent	Pre-Treatment n	Pre-Treatment (%)	Before Retreatment n	Before Retreatment (%)	After Retreatment n	After Retreatment (%)
Myopia > 3D	28	(84.8%)	2	(6.1%)	1	(3.6%)
Myopia > 2 to 3D	4	(12.1%)	5	(15.2%)	1	(3.6%)
Myopia > 1 to 2D	1	(3.0%)	15	(45.5%)	4	(14.3%)
± 0.5D	0	(0.0%)	2	(6.1%)	14	(50.0%)
± 1D	0	(0.0%)	10	(30.3%)	22	(78.6%)
Hyperopia > +1 to 2D	0	(0.0%)	1	(3.0%)	0	(0.0%)
Total	33	(100.0%)	33	(100.0%)	28**	(100.0%)

* Represents 33/909 (3.6%) of eyes requiring retreatment.
** 5 eyes did not have a visit ≥6 months after retreatment.

Table 3-13
Haze in Retreatment Cases
(n=33)*

Haze		Pre-Treatment n	Pre-Treatment (%)	Before Retreatment n	Before Retreatment (%)	After Retreatment n	After Retreatment (%)
0.0 - 0.5	**Trace**	33	(100.0%)	28	(84.8%)	25	(92.6%)
1 - 1.5	**Mild**	0	(0.0%)	3	(9.1%)	1	(3.7%)
2.0	**Moderate**	0	(0.0%)	2	(6.1%)	0	(0.0%)
3.0	**Severe**	0	(0.0%)	0	(0.0%)	1	(3.7%)
Total		33	(100.0%)	33	(100.0%)	27**	(100.0%)

* Represents 33/909 (3.6%) of eyes requiring retreatment.
** 5 eyes did not have a visit ≥6 months after retreatment. One eye had missing Haze score at visit after retreatment.

Risks. The risks for patients requiring retreatment are the same as for the original procedure with the additional caveat that patients who are prone to haze formation and an accompanying loss of BSCVA and/or UCVA are similarly prone to healing with haze after retreatment. Doctors are encouraged to wait for significant reduction in haze and concomitant refractive stability prior to retreating patients. There is no evidence that undercorrection by the laser system is causative for these retreatments. VISX believes that variable healing response is the major causative factor for retreatment.

3.4.5 RE-EPITHELIALIZATION

Of the 909 eyes evaluable for safety, 884 (97.2%) eyes were available for an analysis of re-epithelialization. Re-epithelialization was defined as either no epithelial defect on the last daily exam post-treatment, or discharged with a ≤25.0% defect and seen at 1 month post-operatively without complication or adverse event noted. By 5 days post-treatment, 86.5% (765/884) had re-epithelialized. All patients had re-epithelialized at the next visit with no adverse events noted.

3.4.6 TOPOGRAPHIC ANALYSIS/CENTRAL ISLANDS

Topographic analysis was performed on a subset of 350 eyes to study surface regularity. So-called "central islands", or slightly raised central portions of the cornea, were seen in 11.8% (24/203) of eyes at 3 months. The incidence of central islands reduced spontaneously to 5.9% (11/185) at 1 year and 3.6% (2/55) at 2 years. Software refinements further reduced the incidence of central islands to 3.0% at 3 months and 0% at 1 year. No clinical correlation was seen between the presence of central islands and outcome data.

3.4.7 ENDOTHELIAL CELLS

Endothelial cell counts were performed on a subset of 23 eyes at two clinical sites. No statistically significant changes in endothelial cell density, coefficient of variation or percent hexagonality were seen between pre-treatment and post-treatment in 6-month intervals which were studied during the 2 years post-treatment. These results are consistent with published literature which report no detrimental effects of excimer laser surgery on the human corneal endothelium.

3.4.8 PAIN

Complaints of pain were categorized as 'None', 'Mild', 'Moderate', or 'Severe'. **Table 3-14** shows the level of pain reported by patients during re-epithelialization following treatment.

Table 3-14
Pain During Re-epithelialization
(n = 909)*

None		Mild		Moderate		Severe	
n	(%)	n	(%)	n	(%)	n	(%)
271	(29.8%)	356	(39.2%)	211	(23.2%)	60	(6.6%)

*Data was not available for 11 patients.

3.5 CONCLUSIONS

The clinical results based on 909 eyes treated with a 6.0 mm ablation zone and 1 to 6D of myopia demonstrated that the VISX Excimer Laser System is safe and effective for improving uncorrected visual acuity and predictably reducing low myopia.

3.5.1 SAFETY

None of the eyes treated with the VISX Excimer Laser System showed evidence of cystoid macular edema, hypopyon, hyphema, intraocular infection, corneal perforation or persistent corneal edema.

There were three cases (0.4%) of corneal infiltrate/ulcer (each incident occurred during the first week of post-treatment and none was associated with a loss of best spectacle corrected visual acuity upon resolution). Although not recommended by the protocol, each of the eyes that experienced infiltrates/ulcers had been treated with an immediate post-operative bandage contact lens instead of a patch. This is probably the cause of these adverse events. The recommended post-operative procedure is pressure patching with antibiotic instillation.

Lens abnormalities occurred in <1% of the eyes at any one time point; none were visually significant (i.e., none sustained a loss of two lines of BSCVA). There were 113 (14.0%) eyes which experienced an initial loss of two lines or more of BSCVA at 1 month, but this improved to 0.2% at 2 years or more after post-treatment. Most complications reported appeared during early post-treatment period and reduced in frequency over the course of follow-up. There were no ocular complications associated with retreatment.

3.5.2 EFFECTIVENESS

There was a statistically significant improvement in UCVA following PRK. Two eyes (2/480) or 0.4% were 20/40 or better preoperatively. Two hundred and eighty eyes (280/480) or 58.3% were 20/20 or better at ≥2 years. Four hundred and fifty eyes (450/480) or 93.8% were 20/40 or better at ≥2 years. The UCVA was stable over time through 2 years after treatment. Four hundred and thirty two eyes (432/480) or 90.2% of eyes were within 1D of intended correction at ≥2 years after treatment.

This page left blank intentionally.

SECTION 4.0 - SURGICAL PLANNING AND PROCEDURES

NOTE: After reading this section, please refer to the step-by-step procedure provided in Section 5, *Step-By-Step Procedure*, before proceeding with the surgery.

4.1 INTRODUCTION

PRK is a procedure using the energy of the excimer laser to create a superficial lamellar keratectomy of a shape designed to correct or ameliorate a specific refractive error. It is essential that the refractive information upon which this surgical procedure is based is accurate and is correctly transmitted to the laser. **It is the sole responsibility of the operating doctor to ensure the information for each individual patient is accurate.**

4.2 PRE-OPERATIVE (EXAMINATION OF THE PATIENT)

A complete examination, including, but not limited to, cycloplegic evaluation, must be performed. The lens must be evaluated to assure that nuclear sclerosis or any other lens opacity is not present prior to laser surgery, as these opacities may adversely affect the end surgical result. Direct and indirect ophthalmoscopy through a dilated pupil are essential. Evaluation of the optic nerve and measurement of IOP are necessary. If there are any concerns regarding the appearance of the optic nerve, a Humphrey 24-2 Fastpac or equivalent threshold test of the visual field should be performed. Pre-operative corneal mapping is essential on all patients to exclude topographical abnormalities. Baseline evaluation of patients with myopia desiring refractive surgery should be performed within 30 days of PRK surgery.

Patients who wear soft contact lenses must discontinue their use for at least 2 weeks and those who wear gas permeable or hard lenses must discontinue their use for at least 3 weeks. Failure to do so will adversely affect the end surgical result.

4.3 PERI-OPERATIVE

4.3.1 ANESTHESIA AND ANALGESIA

Extensive clinical experience has shown that PRK excimer surgery is well tolerated and rarely causes significant pain. For this reason, systemic sedatives and injected local anesthetics are not required. Topical anesthesia applied just before insertion of the lid speculum will provide adequate control of pain during the surgery. For those patients with a high degree of anxiety, appropriate medication may be given pre-operatively.

4.4 INTRA-OPERATIVE

4.4.1 EPITHELIAL REMOVAL - INITIAL TREATMENT

The recommended technique for epithelial removal is mechanical removal in initial PRK surgery. A blunt instrument such as a Paton spatula can be gently used to remove the epithelial layer mechanically. The region of epithelial removal should be at least 6.0

mm in diameter. After the stromal bed is cleaned of debris, a non-fragmenting sponge should be saturated with balanced sterile saline and squeezed out and wiped over the ablation bed. The PRK treatment can then be performed. Attempts to remove epithelium using any other method are not recommended for use in initial surgery, and may adversely affect the surgical result.

4.4.2 EPITHELIAL REMOVAL - SECONDARY TREATMENT

Retreatment may be performed for a variety of reasons although the most common are undercorrection or regression of effect. There are also certain clinical situations where irregular topography or non-resolving corneal haze may be present. The technique used in retreatment technique is similar to the PRK treatment described above, except that modified epithelial removal techniques may be employed in retreatment of PRK when strong epithelial adherence to the ablated stromal surface makes mechanical removal difficult. (Mechanical epithelial removal is the only method recommended for initial treatments, as outlined above.) Three epithelial removal techniques for retreatment are outlined below

4.4.2.1 MECHANICAL EPITHELIAL REMOVAL TECHNIQUE

If epithelial adherence is sufficiently weak, the epithelium may be removed mechanically as described above for initial ablations.

4.4.2.2 LASER/SCRAPE TECHNIQUE

In this technique the laser is programmed to remove 40 microns of epithelial tissue uniformly over the intended ablation zone. After this epithelial ablation is performed the remaining epithelial debris is gently removed mechanically with a blunt instrument such as a Paton spatula. After the stromal bed is cleaned of debris, a non-fragmenting sponge should be saturated with balanced sterile saline and squeezed out and wiped over the ablation bed. The refractive (PRK) component is then performed after the stromal bed has been wiped clear of any epithelial debris. This technique may be of benefit in patients with little or no haze.

4.4.2.3 LASER (TRANS-EPITHELIAL) TECHNIQUE

In this technique the laser is programmed to remove 50 microns of epithelial tissue uniformly over the intended ablation zone. The doctor then adds 0.75 diopters to the planned PRK myopic correction to remove the remaining epithelium. This technique may be of benefit in patients with non-resolving haze, irregular topography or where strong epithelial adherence to the ablated stromal surface makes mechanical removal difficult.

4.5 POST-OPERATIVE

4.5.1 PATCHING AND ANTIBIOTICS

Following completion of the excimer laser surgery, appropriate medications and a firm patch should be applied to the eye. A steroidal medication may be included at the time of

patching, though some doctors may desire to omit steroids until the epithelium has healed completely. Daily observation is required until re-epithelialization is complete regardless of whether steroids are used.

4.5.2 HANDLING COMPLICATIONS

Delayed re-epithelialization of the ablated surface may be anticipated in some patients. It is essential that these patients be monitored on a daily basis with installation of antibiotics and maintenance of a firm patch. The doctor must remain alert to the possible developments of corneal infiltrates, which will require appropriate diagnostic and therapeutic measures.

This page left blank intentionally.

SECTION 5.0 - VISX EXCIMER LASER SURGICAL PROCEDURES

NOTE: Before proceeding, please refer to the laser preparation and shut-down procedures presented in the VISX Excimer Laser System *Operator's Manual*, Chapter 7, *Operating Instructions*.

NOTE: The VISX Excimer Laser System contains a Class IV laser with an output at 193 nm, which is potentially hazardous to the skin and the surface layers of the cornea. This laser radiation will not enter the eye, and poses no threat to retinal structures or the crystalline lens. However, the fixed optical system restricts the beam path, which is bounded by the operating table or the floor. Reflectivity from objects in operating rooms (including surgical instruments) is extremely low for 193 nm radiation.

NOTE: The area of potential hazard (Nominal Hazard Zone) for production of a photochemical keratitis has been determined to be less than 40 cm from the primary beam. All healthcare personnel should avoid direct exposure to the skin or eye by the primary beam. While no hazard may exist further than 40 cm from the beam, the use of protective eyewear is recommended if there is a possibility that healthcare personnel will approach closer than this distance from the primary beam.

NOTE: The *Professional Use Information Manual* is to be used in conjunction with the VISX Excimer Laser System *Operator's Manual*. Refer to the *Operator's Manual* regarding designated sections listed in Section 5.1.

5.1 STEP-BY-STEP PROCEDURE

1. Power ON the system.

2. Complete all daily calibrations, as described in the VISX Excimer Laser System, *Operator's Manual*, Section 6, *Daily Calibrations*.

3. Prepare a VisionKey card with patient information and parameters for the PRK procedure as described in the *Operator's Manual*, Chapter 2, *Device Description—Interactive Computer Menus*. This may be done in advance of treatment.

   NOTE: Ablate a -4.0 D, 6.0 mm lens after every THIRD treatment to verify the calibration of the VISX Excimer Laser System. Refer to the *Operator's Manual*, Chapter 6, *Daily Calibrations*, for additional information on the calibration procedure.

4. Ensure that all persons in the operating room obey all safety regulations. Caution all attendees in the operating room against touching the laser, patient, or patient chair during the procedure. Movement of personnel in the operating room should be minimized during the procedure. It is recommended that all attendees, including the doctor, wear surgical masks and protective eyewear.

5. Insert the VisionKey card into the card drive when prompted by the system software. Follow the system software prompts. If the card has been preprogrammed, **verify that the card corresponds with the patient to be treated.** Add any additional data to the PRK Auto treatment screen. For an unprogrammed VisionKey card, enter all necessary data and the planned surgery on the PRK Auto treatment screen.

   The doctor has the option to perform a test of the patient's procedure parameters prior to the actual procedure. Refer to the *Operator's Manual*, Section 2, *Device Description*, under the *Treat* command, for information regarding patient test procedures. Confirm that the desired patient parameters are entered in the treatment fields, then fully depress the laser footswitch.

NOTE: The patient's refraction should be entered into the system software at the spectacle plane, and the vertex distance carefully measured and entered. Accurate vertex distances are essential for the best surgical result. The importance of an accurate and thorough refractive and ophthalmological evaluation cannot be over-emphasized.

6. Power ON the video recorder.

7. Center the mechanical position of the chair using the guide marks found on the chair base.

8. Seat the patient and lower the patient chair backrest to a full reclining position while monitoring patient clearance. Ensure that the patient is comfortable.

9. Position the patient so the lateral canthus aligns to the mark on the headrest.

10. Place the vacuum pillow under the patient's head with the bottom portion of the "U" supporting the patient's neck. Assure there is no head tilt or rotation present. This is accomplished by assuring that a line from the vertex of the chin through the nasion is parallel to the operating table.

11. Cover the untreated eye with an opaque shield that protects the eye and occludes vision. A post-operative surgical shield covered with electrical tape is suitable for this purpose. Instruct the patient to keep both eyes opened during the surgical procedure.

12. Monitor patient clearance while rotating the patient chair to the treatment position, then lock the patient chair in place by pressing the foot pedal in the locked position. The chair must be fully rotated and the foot pedal locked for the laser to operate. Correct positioning is confirmed by the green status bar on the computer screen, which allows the procedure to continue.

NOTE: If the patient chair is not in the treatment position and securely locked, the laser will not fire. Check the interlock message on the status screen.

13. Check the surgical parameters entered into the computer against the surgical plan and confirm that all interlocks are cleared. **This is the responsibility of the doctor.**

14. Instruct the patient to remove earrings prior to using the vacuum pillow. Adjust the patient's head and vacuum pillow for comfort, angle, alignment, and stability. Connect the vacuum pillow suction tubing to the suction port located on the patient chair headrest. While keeping the patient properly aligned, conform the pillow shape to the patient's head, creating support under the occiput of the skull. This is more effective than creating lateral support for the head. Holding the pillow support against the occiput, power ON the suction pump switch, which is between the two (2) tilt knobs on the headrest. After several seconds, the pillow will harden and conform to the patient's head. This creates a comfortable, stable platform for the patient. Disconnect the tubing after the pillow has hardened.

15. Position the patient with the microscope set at low zoom magnification. When the cornea is visible in the microscope, focus the image of the cornea and increase the magnification. Refer to the *Operator's Manual*, Chapter 2, *Device Description—Microscope*. Instruct the patient to begin fixating on the blinking red fixation light.

16. Move the patient so the microscope reticle is centered over the patient's pupil. Chair movement is controlled by the doctors keypad. Refer to the *Operator's Manual,* Chapter 2, *Device Description,* for information regarding chair movement.

NOTE: The microscope oculars must be properly focused to accommodate the Doctor's refraction. This will assure that the microscope focal plane and the laser focal plane are coincident.

17. Click "TREAT" to set fluence or boost as required.

18. Allow the patient the opportunity to become familiar with the sounds of the laser during the fluence procedure.

19. Continually encourage the patient to maintain fixation on the blinking red fixation light throughout the procedure.

20. Verify that all color status bars are green in the procedure screen of the system software. If a yellow status bar is displayed, you may continue with the procedure; however, a condition exists that warrants attention as soon as possible after completion of treatment. A red status bar will prevent system operation. Therefore, any interlock must be cleared prior to a treatment.

21. After verification of green system status bars, warn all attendees to stand clear of the laser, patient, and patient chair. Accidental bumping of the laser, patient, or patient chair during the surgery can cause decentering of the treatment area. Movement in the operating room must be kept to a minimum during patient treatment.

22. Verify the patient's name, eye to be treated and refraction.

23. Insert a closed-blade lid speculum into the eye to hold the eyelid open. Position the head so the cornea is centered within the speculum blades. Focus and realign the eye. Using a 6.0 mm marker with centering crosshairs, center the marker over the patient's pupil and gently depress and mark the epithelium.

24. Epithelial removal is best performed and visualized using the ring illuminator, with illumination on the lowest setting. Set the ring illuminator on low power and increase as necessary to allow adequate visualization for epithelial removal. Just prior to depression of the laser footswitch (initiation of the laser treatment) power OFF the ring illuminator and power ON the oblique illumination (MODEL C only) to maintain visualization of the pupil. Visibility of the blinking red fixation light by the patient is facilitated when operating illumination is low.

25. After confirming the pupillary centration of the epithelial mark, quickly remove the epithelium starting at one edge of the marked ablation site. Mechanical removal is facilitated by placing one (1) or two (2) drops of an anesthetic in the operated eye prior to commencing the surgical procedure. It is important for the patient to keep both eyes closed as much as possible after the initial anesthetic drops are instilled to diminish blinking and any resulting epithelial dessication. Many light, even strokes at a fixed site may be necessary to start the epithelial removal process. Avoid hard pressure that deforms the cornea. Use rapid, even strokes until the epithelium is completely removed. Epithelial removal can be accomplished with either a blunt spatula or a small blade such as a Beaver 64. If a sharp instrument is used, take care not to disrupt Bowman's layer. Epithelial removal for secondary treatment should be performed as described in Section 4.4.

    If the patient has not had adequate pre-operative topical anesthesia, place a 6.0 mm anesthetic-soaked pledget on the cornea prior to removal of the epithelium. Remove the pledget after 60 seconds.

NOTE: There should be no epithelial cells in the 6.0 mm diameter treatment zone prior to laser initiation. Avoid adding fluids to the cornea after epithelium removal has begun. Position the head so the cornea is centered within the lid speculum. This minimizes the potential for tears to touch the corneal surface during surgery.

26. If, during the epithelial removal process, the surface of the cornea appears unevenly hydrated, wipe the area with a nonfragmenting sponge that has been soaked with balanced sterile saline and then squeezed so it is moist but not saturated.

27. Patients with nystagmus or poor fixation may require external fixation.

NOTE: Keep the patient relaxed by explaining the process as you go along. Use the dimmest ring illumination intensity that allows the doctor to remove the epithelium. This low illumination is more comfortable for the patient. Use the oblique halogen illumination (MODEL C only) at its lowest intensity during laser ablation.

28. Just prior to surgery, verify that the pupil is centered in the reticle and the patient is fixating on the blinking red fixation light. Instruct the patient to maintain fixation on

the blinking red fixation light at all times. Switch from the ring illumination to the lowest intensity of the oblique illumination (MODEL C only).

29. Check the system focus and adjust the oblique illumination to the lowest intensity that allows monitoring of the pupil position during surgery. Depress the laser footswitch to initiate the procedure. The footswitch has two (2) positions. The first position powers ON the aspirator and pumps within the laser. The footswitch is only partially depressed in the first position. The second position allows the laser to fire and initiates the laser surgery. The footswitch is fully depressed in the second position. It is the doctor's responsibility to continually monitor the position of the patient's eye during the surgery to assure proper ablation centration.

WARNING! Make sure all laser pulses have been fired. Check the Heads-Up Display to confirm treatment completion.

30. When the surgery is complete, remove the speculum and allow the patient to close the eye which has just undergone the laser surgery. Power OFF the microscope light and relieve the vacuum in the patient pillow.

NOTE: The doctor may interrupt the procedure for any reason, at any time, by releasing the laser footswitch. This may be done if the patient should move and the treatment area becomes decentered. The doctor then realigns the eye and continues the procedure by depressing the laser footswitch again. The procedure will automatically start from the point of interruption.

31. Lower the patient chair to its lowest position, then rotate the patient chair from under the laser while carefully monitoring patient clearance. Remove the eye shield from the untreated eye.

32. Place appropriate post-operative medications in the treated eye. Following application of medication, apply a firm pressure patch to the eye.

33. Raise the chair backrest to a sitting position. Assist the patient in putting on any spectacles, and escort them to a waiting area.

34. Ensure that the patient is given post-operative instructions. An analgesic may be given to the patient prior to leaving the facility.

35. Review post-operative instructions, confirm the first follow-up appointment, and discharge the patient when stable.

36. Clean the debris removal nozzle with isopropanol wipes and prepare the system for the next patient.

WARNING! Never operate the laser in the presence of flammable anesthetics or other volatile substances, such as alcohol.

WARNING! Warn the patient about the hazards of driving immediately after surgery. The combination of analgesic and eye patch can be very dangerous.

SECTION 6.0 - EMERGENCY STOP

6.1 GENERAL

If a system emergency situation arises, press the **Emergency Stop** button located on the front control panel (Model B) or the **Laser Stop** button located on the doctor's panel (Model C). This will power OFF the system; however, the gas cleaning and gas detector systems will continue to operate. When the emergency condition no longer exists, turn the button in the direction of the arrows; turn the System Power Key first OFF and then ON; then power ON the system using the **System Power** button, which will re-energize the laser.

If the emergency appears to involve the electrical system (visible smoke, fire, etc.), switch OFF the wall mounted electrical disconnect switch.