Guidance for Testing MR Interaction with Aneurysm Clips

Draft Document

This guidance document is being distributed for comment purposes only.

CDRH MR Working Group
Center for Devices and Radiological Health
Draft released for comment on: May 22, 1996

Comments and suggestions regarding this draft document should be submitted within 60 days of the above release date to Janine Morris, HFZ-450, Office of Device Evaluation, 9200 Corporate Blvd., Rockville, Maryland 20850. Comments and suggestions received after this date may not be acted upon by the Agency until the document is next revised or updated. For questions regarding this draft document, contact Janine Morris at (301) 443-8517.

U.S. DEPARTMENT OF HEALTH AND HUMAN SERVICES
Food and Drug Administration

Center for Devices and Radiological Health

Draft

GUIDANCE FOR TESTING MR INTERACTION WITH ANEURYSM CLIPS

Prepared by the CDRH MR Working Group

Introduction

Magnetic resonance (MR) imaging may be contraindicated for patients with passive metallic implants, such as an aneurysm clip. The magnetically induced forces may dislodge an implant in the patient, resulting in serious injury or death. Other potential problems associated with metallic implants are distortion of the MR image and induced current into the implant. While it is theoretically possible that an induced current in a metallic implant may cause excessive heating or stimulation, because of the small size of an aneurysm clip it is unlikely to cause any problems of this type. Therefore, this issue is not considered further in determining the safety of aneurysm clips in the MR environment.

Currently, there is no standardized test method to determine if an implant is MR compatible or safe. What follows is a general discussion of the issues and a draft of a test method. The draft is based on the current understanding of the MR environment and test methods available. In the future it is likely that the test method will change as the MR environment continues to change and new and better test methods become available. Other methods may be used if it can be demonstrated that they are effective in determining the device is safe in the MR environment and the device does not sign affect the quality of the MR image.

Labeling

Labeling with respect to magnetic effects can vary from MR safe to MR compatible. However, the current use of terms such as MR compatible and MR safe have the potential to be misleading and cause confusion. MR is an emerging and expanding technology so that a device found to be "safe" and "compatible" in a MR environment in current clinical use, may be found unsafe under a different system with different conditions. Without labeling that defines the conditions in which the device has been tested to show it is safe and compatible in a specified MR environment, these terms do not have much meaning. Also, a statement such as nonmagnetic is not accurate as it is dependent on the conditions of the MR environment and how the device is tested. As a frame of reference we are currently adopting the following definitions for MR safe and MR compatible. However, it should be noted that these definitions are dependent on the MR environment in which the device has been tested. Any claims for an aneurysm clip with respect to the definitions below should include a statement of the environment in which they apply including: the maximum static field strength, the maximum spatial gradient, the maximum product of the static field and the spatial gradient, and the type of magnet (superconducting or permanent).

MR Safe: The device, when used in the MR environment, has been demonstrated to present no additional risk to the patient or other personnel, but may affect the quality of the diagnostic information.

MR Compatible: The device, when used in the MR environment, is MR Safe and has been demonstrated to neither significantly affect the quality of the diagnostic information nor have its operations affected by the MR device.

Displacement Force

Introduction

A magnetic displacement force is produced when a magnetic object is exposed to a magnetic field gradient. The magnetically induced force, **F**, is a function of the magnitude of the magnetic field gradient and the magnetic moment of the object (which is in turn a function of the object's magnetization and volume). Or, $\mathbf{F} = \nabla(\mathbf{m} \bullet \mathbf{B})$, where **m** is the dipole moment and **B** is the magnetic field strength[1]. Since the magnetization, **M**, is proportional to **m**, it is also true that $\mathbf{F} \propto \nabla(\mathbf{M} \bullet \mathbf{B})$. For diamagnetic and paramagnetic materials and for ferromagnetic materials below their magnetic saturation point, the force is proportional to the product of the magnetic field strength and the gradient of the magnetic field strength, $(|\mathbf{B}||\nabla\mathbf{B}|)$[2]. For ferromagnetic materials which have reached saturation, the force is proportional to the gradient of the magnetic field strength, $\nabla\mathbf{B}$[2].

Determining the Maximum Spatial Gradient

The displacement force must be measured at the location of the maximum spatial gradient or the location of the maximum product of the spatial gradient and the field strength so it is necessary to determine that location. Magnet system designers often incorporate shielding, which contains the field within a smaller volume around the magnet. This shielding can produce greater gradients in the magnetic field, which will produce greater displacement forces on magnetic objects. Shielding can also complicate the spatial distribution of the field and its gradient. For a scanner with a horizontal static field, B_o, along the long axis (Z axis) of the magnet, the maximum spatial gradient should occur in the Z direction along the Z-axis inside the magnet bore (Figure 1). This is due to the fact that the field lines run along the Z axis until they reach the portal of the magnet and then begin to bend around in the X and Y directions. To determine the maximum spatial gradient the following procedure can be used. Using a Hall-effect gauss meter with a full scale range greater than the static field strength of the scanner, measure the magnetic field strength along the long axis of the scanner. Start measuring at the isocenter of the scanner, where the field strength is equal to the stated magnet field strength, and then back out measuring field strength and location every five centimeters. To reference the location, consider the cross hair light beams at the opening of the magnet to be the origin. Then
moving inside the magnet will be in the negative direction, and moving away from the magnet into the room will be in the positive direction. After measuring the field strength and location along the Z-axis, calculate the slope at each point. Then multiply the gradient (slope) by the field strength at each location to determine $|\mathbf{B}||\nabla\mathbf{B}|$ at each location.

The Winchester Engineering and Analytical Center (WEAC) mapped the spatial gradients of a Phillips 1.5 tesla MR scanner, using a procedure similar to that described above. WEAC used a portable hand held Gauss meter with an axial probe to measure the magnetic field strength at various locations inside and outside the magnet bore. Their preliminary data showed that the
maximum gradient in the Z direction, $\nabla \mathbf{B}_z$, was 0.22 kG/cm. The maximum $\nabla \mathbf{B}_z$ occurred inside the magnet bore at - 42 cm in the Z direction, (which is equivalent to 100 cm from the isocenter of the magnet). They further found that the maximum $|\mathbf{B}_z||\nabla \mathbf{B}_z|$ was 2.41 kG^2/cm, which occurred inside the magnet at -53 cm in the Z direction, (a location that is to 90 cm from the isocenter)[4].

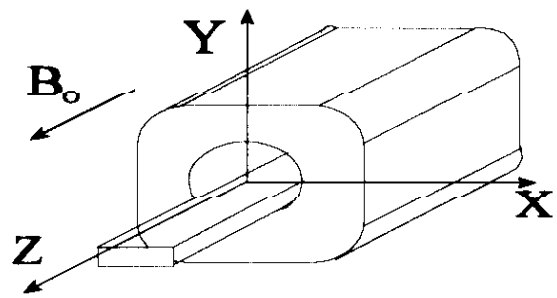

Figure 1. Coordinate system for determining location of maximum gradient in an MRI scanner.

Test Method for the Displacement Force

The magnetically induced force may be measured using the method described in ASTM standard F 1542-94, Standard Specification for the Requirements and Disclosure of Self-Closing Aneurysm Clips, section 4.3, with strict attention to the caveats in section 4.3.2[3]. The clip is suspended from a string and held stationary, perpendicular to the ground. Place the clip on the string at the location where $|\mathbf{B}||\nabla \mathbf{B}|$ is a maximum for a paramagnetic, diamagnetic or ferromagnetic clip below saturation. For a ferromagnetic clip above the magnetic saturation point, place the clip on the string at the location where $\nabla \mathbf{B}$ is a maximum. If you are not certain if the clip is paramagnetic, diamagnetic or ferromagnetic, perform the test at both locations. After the clip is in position, measure α, the deflection of the clip from the vertical direction (Figure 2). It is possible that instead of being attracted to the magnet, your device might be repelled by the magnet. Therefore, the absolute value of the deflection angle should be used when calculating the average deflection angle.

If the deflection of the string from the vertical direction in the force test is less than 45°, the magnetically induced force is less than the force on the clip due to gravity (its weight). To pass the test for displacement force, the measured force must be less than or equal to the gravitational force.

It should be noted that the tests described are subject to a number of conditions for the

results to be valid.

- First, the force test must be performed at the location where the spatial gradient of the product of the spatial gradient and field strength in the magnetic filed is a maximum. Both the location and the magnitude of the maximum spatial gradient will probably vary in magnets form different manufacturers.

- The force test also assumes that the magnetic field is oriented to produce a horizontal deflection force.

- Only finished clips should be tested since it is possible for nonmagnetic materials to develop magnetic domains when they are worked.

- Finally, note that a clip which deflects less than 45° in a 1.5 tesla scanner may deflect more in a scanner with a larger magnetic field strength or larger magnetic spatial gradient.

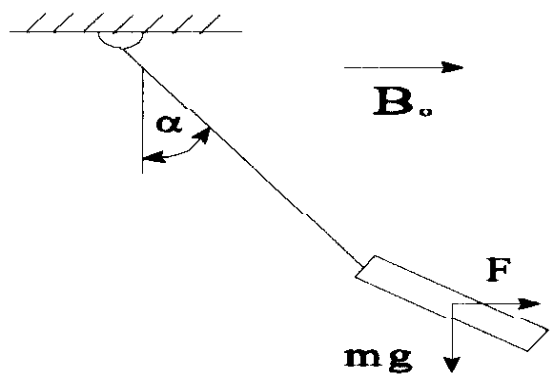

Figure 2. Displacement force measurement

Torque

Introduction

A torque is produced as an object attempts to align itself with the magnetic field produced by the imaging magnet. The torque is a function of the strength of the magnetic field and the characteristics, both material and geometric, of the magnetically active object. It is related to the geometry, composition, distribution of mass, and magnetic properties of the object and the strength of the magnetic field. The torque may be written as:

$$\mathbf{T} = \mathbf{m} \times \mathbf{B}, \qquad (1)$$

where **m** is the dipole moment and **B** is the magnetic field strength[1].

So, for an object with a given dipole moment, the maximum magnetic torque produced on an object will occur when the object is in the region of the highest magnetic field strength, that is,

in the imaging volume.

For an MRI scanner with a horizontal magnetic field:

$$\mathbf{B} = B_o\hat{z} \tag{2}$$

and

$$\mathbf{m} = (m_x\hat{x} + m_y\hat{y} + m_z\hat{z}) \tag{3}$$

so,

$$\mathbf{T} = (m_x\hat{x} + m_y\hat{y} + m_z\hat{z}) \times B_o\hat{z} = B_o m_y\hat{x} - B_o m_x\hat{y} \tag{4}$$

or

$$\mathbf{T} = T_x\hat{x} + T_y\hat{y} \tag{5}$$

Therefore, for a scanner with a horizontal magnetic field, the torque may have components in the x and y directions. It is very important to note that while the direction of **B** is always in the z direction, the direction of **m** varies as the orientation of the clip varies with respect to the scanner. So, as the orientation of an object changes with respect to the scanner, the magnitude of the torque (and the magnitudes of the components of the torque in the x and y directions) will change.

If an object has a spherical symmetry, it will have no "main axis," and there will be no preferred orientation with the magnetic field and no torque experienced, even if the object has substantial (but uniform) magnetic susceptibility. Similarly, a ferromagnetic ring, which is constrained to the XY plane normal to the axis of the main magnetic field as shown in Figure 3a, will experience no torque. The same ring orientated as in Figure 3b will, however, experience a torque.

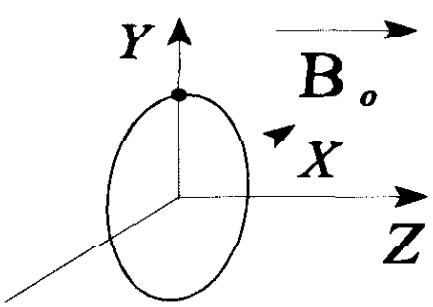

Figure 3a. No Torque

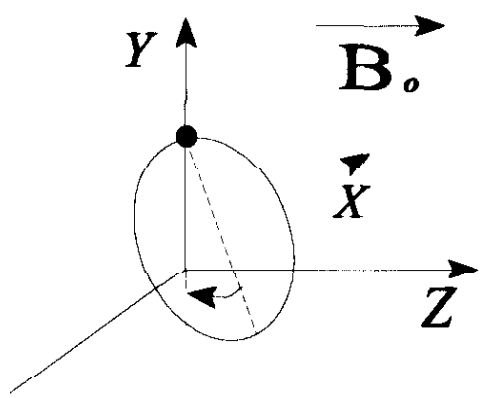

Figure 3b. Torque

When an ellipsoid of revolution or rod is placed in a magnetic field, it will tend to align with the field. The magnitude of torque is dependent on the position of the rod. As the long axis of the rod is rotated away from the magnetic field, the torque on the rod increases until it reaches a maximum when the angle of the axis of the object with the field is approximately

45°[5].

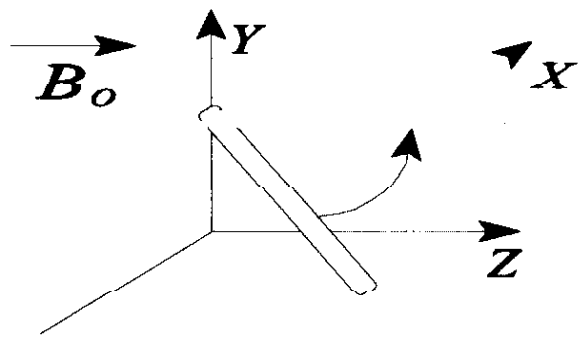

Figure 4. Magnetically induced torque on a rod.

Many methods may be used to measure the magnetically induced torque. Each method has advantages and disadvantages. In all of these methods the maximum magnetic torque is compared to the torque on the clip produced by gravitational forces. In addition to the other constraints, the maximum magnetic torque acting on an aneurysm clip must be less than or equal to the gravitational torque for the clip to be determined to be safe in the MR environment.

Test Method for the Torque

This method describes a procedure for determining the magnetically induced torque as a function of angular position, δ, for a clip oriented with its long axis in the x-z plane. A similar procedure may be followed for a clip oriented with its long axis in the x-y or y-z plane. To determine the magnitudes of T_x and T_y, the components of the torque vector, **T**, it is necessary to perform two measurements with the clip in the same position in the x, y, z coordinate system.

The body forces acting on the clip when it is at the isocenter of the MR imaging scanner consist of the weight of the clip and the magnetically induced torque. These forces are produced by the scanner's magnetic field and by the Earth's gravitational field and have fixed values when the clip is in a given position. Therefore, it is essential that both measurements be done with the clip in the same orientation in the x, y, z coordinate system. Each measurement will determine the magnitude of one of the components of the magnetically induced torque. All measurements should be performed at the isocenter of the scanner where the magnetic field is uniform and maximum.

The pairs of measurements should be performed at 15° increments in the x-z, x-y, and y-z planes. The magnitude of the torque can then be calculated at each angular position, giving a relation for torque as a function of angular position from which the maximum magnetically induced torque can be determined. The maximum magnetically induced torque can then be compared to the torque produced by gravity. An acceptable magnetically induced torque must be less than the torque produced by gravity.

- An estimate for the maximum torque produced by gravity may be calculated by assuming that one end of the clip is fixed and that all of the weight of the clip acts at the other end of the clip. Then the torque produced by the weight of the clip would be equal to the product of the weight of the clip and its length (mgL in terms of the variables used

below).

- Note that this estimate for the maximum torque assumes that the person with the implanted clip is subjected only to the static force produced by 1 gravity and that greater gravitational forces may be produced other locations such as in moving cars or on amusement park rides.

- Also note that the measurement is only meaningful in relation to horizontal magnetic fields with a field strength less than or equal to the field strength used during the test. An aneurysm clip which has an acceptable torque in a 1.5 tesla scanner may have an unacceptably high torque in a scanner with a greater field strength. Also, if the direction of the magnetic field is not horizontal, the measurement technique and torque relations given here are not valid and must be modified.

Measurement method for clip with its long axis in the x-z (horizontal) plane

The technique requires a nonmagnetic compressive load cell and a clevis pin type fixture for holding the clip as shown in Figure 5.

Measurement 1: clip free to rotate in the y-direction, but constrained against other motion. The clevis pin type fixture contacts one end of the clip and holds it in the x-z plane. The load cell contacts the other end of the clip so that a compressive force is created. The load cell is oriented so that the load axis of the load cell is perpendicular to the long axis of the clip and lies in the x-z plane (Figure 5). *The entire assembly is oriented so that the long axis of the clip makes an* angle of δ with the x-axis, as shown in the diagram in Figure 6. Record the compressive force, F_1, from the load cell. Then $T_y = F_1 L$, where L = the length of the clip. The derivation of the expression for T_y (Including a free body diagram of the clip in the Measurement 1 configuration) is given in Appendix 1. This relation for T_y assumes that the center of mass of the clip is located somewhere on the long axis of the clip. If this is not true for the clip that is being tested (for instance for a clip with semicircular blades), the previous equation for T_y *may not be applicable* and a new expression for T_y must be determined.

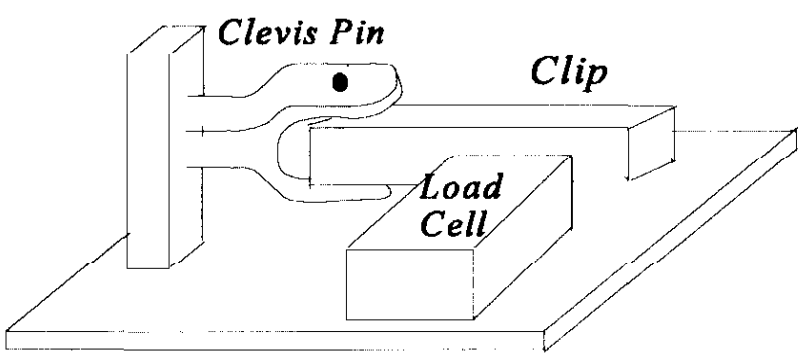

Figure 5. Torque measurement apparatus in Measurement 1 configuration.

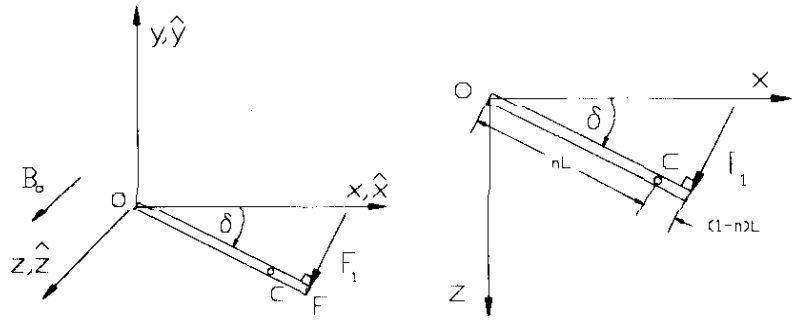

Figure 6. Diagram of aneurysm clip in the Measurement 1 configuration showing F_1, the force on the load cell.

Measurement 2: clip free to rotate in the x-direction, but constrained against other motion. The *clip* is in the same orientation it had for Measurement 1. The clevis pin fixture and the load cell are repositioned to make Measurement 2. The clevis pin type fixture contacts one end of the clip and holds it in the x-z plane so that it can rotate in the x-direction. The load cell contacts the top or bottom of the other end of the clip so that a compressive force in the vertical (y) direction is created. The load cell is oriented so that the load axis of the load cell is vertical and perpendicular to the long axis of the clip. The entire assembly is oriented so that the long axis of the clip makes an angle of δ with the x-axis, as shown in Figure 7, where δ is the same angle that was used in Measurement 1. Record the compressive force, F_2, from the load cell. Then calculate the x-component of the torque using the relation $T_x = L(F_2 - nmg)\sin\delta$, where L = the length of the clip, n gives the location of the canter of mass of the clip as shown in Figure 8, m is the clip mass, and g = the acceleration due to gravity. The derivation of the expression for T_x (including a free body diagram of the clip in the Measurement 2 configuration) is given in Appendix 1. This relation for T_x assumes that the center of mass of the clip occurs on the long axis of the clip. If this is not true for the clip that is being tested, the previous equation for T_x *may not be applicable* and a new expression for T_x must be determined.

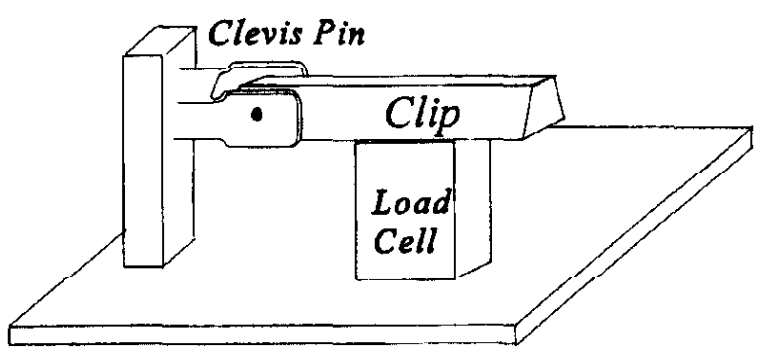

Figure 7. Torque measurement apparatus in the Measurement 2 configuration.

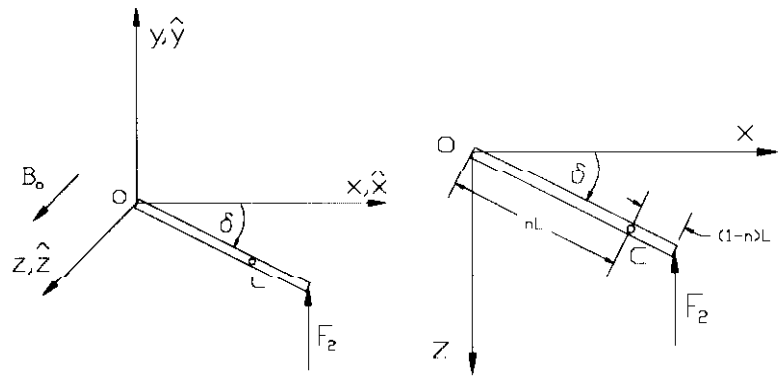

Figure 8. Diagram of aneurysm clip in the Measurement 2 configuration showing F_2, the force on the load cell.

Image Artifact

Introduction

There are three primary mechanisms for production of an MR imaging artifact by an implant[6,7]. A ferromagnetic material may produce a static field in addition to the uniform magnetic field produced by the magnet. This will perturb the relationship between position and frequency that is essential for accurate image reconstruction [7]. Ferromagnetic and nonferromagnetic objects may produce appreciable distortion if they have a magnetic susceptibility sufficiently different than that for tissue. The presence of such objects can lead to macroscopic imperfections of the magnetic field which lead to nonparallel flux lines [6]. The extent of the artifact depends upon the magnetic susceptibility, quantity, shape, orientation, and position of the object, as well as the method used for image processing. Finally, an implant may exhibit an induced eddy current due to the incident RF magnetic field. This will alter the RF field near the implant, thereby creating distortion. The extent of this artifact depends upon the factors listed above as well as the conductivity of the implant.

Test Method for the Image Artifact

The following test procedure may be used to establish the degree of image artifact produced by an implant. Whenever possible, the worst case conditions (image acquisition parameters, implant orientation, etc.) Consistent with clinical applications, should be adopted. If a measurable artifact is observed, an explanation of the source (e.g. ferromagnetic, susceptibility, or eddy current) should be offered. Such an explanation may be defended, for example, by presenting multiple images acquired with different acquisition parameters and observing concomitant changes in artifact geometry.

Use a plastic grid (with 1.0-1.5 cm spacing) to show extent of artifact. Place the implant and grid in a fluid, such as water or a phantom, that will produce signal in an MR image. (Plastic will produce void, hence giving contrast to the grid). The grid and the water tank (or phantom) should be large enough so that the signal artifact is negligible at the edges.

The RF coil must be electrically loaded by use of a phantom or some other reproducible means. (See NEMA Standards Publication/No. MS 1, "Determination of Signal-to-Noise Ratio (SNR) in Diagnostic Magnetic Resonance Images).

Images should be acquired at slices (separated by 1.0 cm) above and below the plane of the implant until the artifact becomes negligible. The grid should be repositioned between acquisitions so that it is coincident with the plane of each image.

Two sets of images, one set with he implant and the other without, should be acquired by two methods. First, a gradient echo pulse sequence should be used to demonstrate performance under worst case conditions. (Since gradient echoes do not employ 180 degree refocussing pulses, they will be more prone to distortion due to nonuniform susceptibility). Second, a conventional spin echo pulse sequence should be employed to demonstrate performance under more optimal conditions. Data should be acquired using the phase encode direction (relative to the implant orientation) which produces the most severe artifact.

If the implant has appreciable conductivity (i.e. higher than that for tissue) then a relatively high SAR (about 8.0 W/kg) should be used in order to demonstrate performance under worst case conditions.

The following data acquisition parameters must accompany the report:

Parameter	Dimensions
Phantom filler T1	milliseconds
Phantom filler T2	milliseconds
Voxel dimensions	mm X mm X mm
Receive channel 3dB bandwidth	kilohertz
TR; sequence repetition time	milliseconds
TE; echo delay time	milliseconds
Number of signals averaged	-
Data acquisition matrix size	-
Static magnetic field strength	tesla
Maximum Gradient field strength	tesla/meter
Specific Absorption Rate (SAR)*	watt/kilogram

* Specific Absorption Rate need only be specified if the conductivity of the implant is greater than that for tissue.

For each slice the area of the grid which has image artifact should be measured. The maximum area should be reported as the extent of the artifact. The extent of the artifact should be given as an absolute area (e.g. cm^2). The cross-sectional area of the implant should also be reported.

Geometric distortion may be computed by comparing lengths (e.g. distances between grid nodes) measured on the image to their true values.

$$\text{geometric distortion (\%)} = 100 \times |L_m - L_a| / L_a$$

where L_m = distance measured on the image, and L_a = actual distance. Maximum long range and short range geometric distortions should be reported. Long range distortion refers to that measured across the entire field of view (horizontal, vertical, lower left corner to upper right corner, or upper left corner to lower right corner). (The extent of the field of view should also be reported and should be about 15 cm2 for cranial implants or 30 cm2 for body implants). Short range distortion refers to that measured between neighboring grid nodes. For more guidance, see NEMA Standards Publication No. MS2 (Determination of Two-dimensional Geometric Distortion in Diagnostic Magnetic Resonance Images).

For additional test method information, see NEMA Standards No. MS 3 (Determination of Image Uniformity in Diagnostic Magnetic Resonance Images).

References

1. Thome, R.J. and J.M. Tarrh, "MHD and Fusion Magnetics, Field and Force Design Concepts," John Wiley & Sons, New York, 1982.

2. Purcell, E.M., "Electricity and Magnetism, Berkeley Physics Course, Volume 2," 2nd edition, McGraw-Hill, New York, 1985.

3. "ASTM F 1542 - 94, Standard Specification for the Requirements and Disclosure of Self-Closing Aneurysm Clips," ASTM, Philadelphia, PA, 1994.

4. Boivin, W. et al., "WEAC/CDRH MRI Survey: Mapping of the Spatial Gradient of the Static Magnetic Field," 1995.

5. Spooner, Thomas, "Properties and Testing of Magnetic Materials," McGraw-Hill, New York, 1927.

6. Bellon, E.M. et al., "MR Artifacts: A Review," AJR 147:1271-1281, Dec., 1986.

7. Shellock, F.G., "Biological Effects and Safety Aspects of Magnetic Resonance Imaging," Mag. Res. Quar., vol. 5, no.4, pp. 243-261.

Appendix 1.

Equilibrium equations for Measurement 1: clip free to rotate in the y-direction, but constrained against other motion

Summing forces in the free body diagram on the right side of Figure A1.1:

$$\Sigma \mathbf{F} = 0 = F_x\hat{x} + F_y\hat{y} + F_z\hat{z} - mg\hat{y} + F_1(-\sin\delta\,\hat{x} + \cos\delta\,\hat{z}) \tag{A1.1}$$

Equating coefficients of $\hat{x}$, $\hat{y}$, and $\hat{z}$ gives the three equations:

$$F_x = F_1\sin\delta \tag{A1.2}$$

$$F_y = mg \tag{A1.3}$$

$$F_z = F_1\cos\delta \tag{A1.4}$$

Summing moments about the origin:

$$\Sigma \mathbf{M}_o = 0 = M_x\hat{x} + M_z\hat{z} + T_x\hat{x} + T_y\hat{y} + \mathbf{r}_{oc} \times (-mg\hat{y}) + \mathbf{r}_{oF} \times F_1(-\sin\delta\,\hat{x} + \cos\delta\,\hat{z}) \tag{A1.5}$$

$$\begin{aligned} 0 = {} & M_x\hat{x} + M_z\hat{z} + T_x\hat{x} + T_y\hat{y} + nL(\cos\delta\,\hat{x} + \sin\delta\,\hat{z}) \times (-mg\hat{y}) \\ & + L(\cos\delta\,\hat{x} + \sin\delta\,\hat{z}) \times F_1(-\sin\delta\,\hat{x} + \cos\delta\,\hat{z}) \end{aligned} \tag{A1.6}$$

$$0 = M_x\hat{x} + M_z\hat{z} + T_x\hat{x} + T_y\hat{y} - nmgL\cos\delta\,\hat{z} + nmgL\sin\delta\,\hat{x} - F_1L\hat{y} \tag{A1.7}$$

Equating coefficients gives:

$$M_x + T_x = -nmgL\sin\delta \tag{A1.8}$$

$$T_y = F_1L \tag{A1.9}$$

$$M_z = nmgL\cos\delta \tag{A1.10}$$

These equations assume that the center of mass is located on the long axis of the aneurysm clip at point c in Figure A1.1. In the free body diagram in Figure A1.1, the components of the magnetically induced torque, T_x and T_y, act at point c, the center of mass of the clip. The derivation does not require that the resultant magnetically induced torque act at the center of mass. In fact, the derivation is independent of the point of application of T_x and T_y.

In Figure A1.1 and in the equilibrium equations given above:

F_x, F_y, and F_z	= components of the reaction force at the clevis pin
M_x M_z	= components of the reaction torque at the clevis pin
T_x and T_y	= components of the magnetically induced torque
m	= mass of clip

g	= acceleration due to gravity
F_1	= force on the load cell
L	= clip length
nL	= distance from clevis pin to center of mass

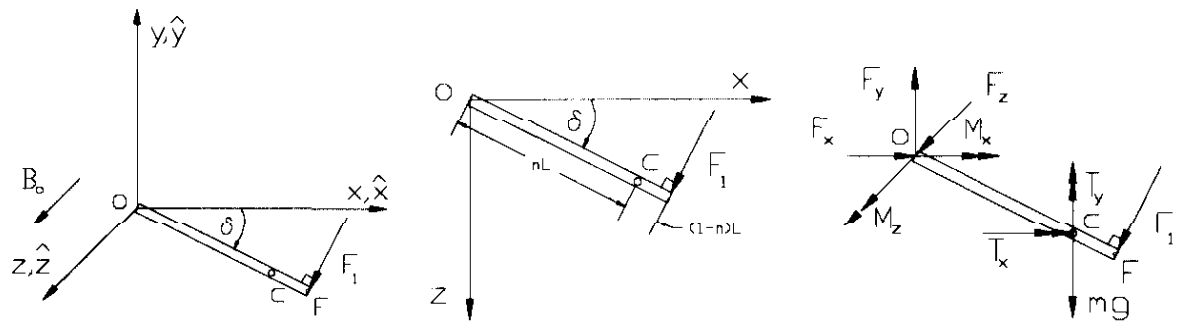

Figure A1.1. Aneurysm clip in Measurement 1 configuration.

Equilibrium equations for Measurement 2: clip free to rotate in the x-direction, but constrained against other motion

Summing forces in the free body diagram on the right side of Figure A1.2:

$$\Sigma \mathbf{F} = 0 = R_x \hat{x} + R_y \hat{y} + R_z \hat{z} - mg\hat{y} + F_2 \hat{y} \tag{A1.11}$$

Equating coefficients of $\hat{x}$, $\hat{y}$, and $\hat{z}$ gives the three equations:

$$R_x = 0 \tag{A1.12}$$

$$R_y = mg - F_2 \tag{A1.13}$$

$$R_z = 0 \tag{A1.14}$$

Summing moments about the origin:

$$\Sigma \mathbf{M}_o = 0 = C_y \hat{y} + C_z \hat{z} + T_x \hat{x} + T_y \hat{y} + \mathbf{r}_{oc} \times (-mg\hat{y}) + \mathbf{r}_{oF} \times F_2 \hat{y} \tag{A1.15}$$

$$\begin{aligned} 0 = {} & C_y \hat{y} + C_z \hat{z} + T_x \hat{x} + T_y \hat{y} \\ & + nL(\cos\delta\, \hat{x} + \sin\delta\, \hat{z}) \times (-mg\hat{y}) + L(\cos\delta\, \hat{x} + \sin\delta\, \hat{z}) \times F_2 \hat{y} \end{aligned} \tag{A1.16}$$

$$\begin{aligned} 0 = {} & C_y \hat{y} + C_z \hat{z} + T_x \hat{x} + T_y \hat{y} \\ & - nmgL\cos\delta\, \hat{z} + nmgL\sin\delta\, \hat{x} + F_2 L\cos\delta\, \hat{z} - F_2 L\sin\delta\, \hat{x} \end{aligned} \tag{A1.17}$$

Equating coefficients gives:

$$T_x = L(F_2 - nmg)\sin\delta$$

(A1.18)

$$T_y + C_y = 0 \tag{A1.19}$$

$$C_z = L(nmg - F_2)\cos\delta \tag{A1.20}$$

These equations assume that the center of mass is located on the long axis of the aneurysm clip at point c in Figure A1.2. In the free body diagram in Figure A1.2, the components of the magnetically induced torque, T_x and T_y, act at point c, the center of mass of the clip. The derivation does not require that the resultant magnetically induced torque act at the center of mass. In fact, the derivation is independent of the point of application of T_x and T_y.

In Figure A1.2 and in the equilibrium equations given above:

R_x, R_y, and R_z	= components of the reaction force at the clevis pin
C_y C_z	= components of the reaction torque at the clevis pin
T_x and T_y	= components of the magnetically induced torque
m	= mass of clip
g	= acceleration due to gravity
F_2	= force on the load cell
L	= clip length
nL	= distance from clevis pin to center of mass

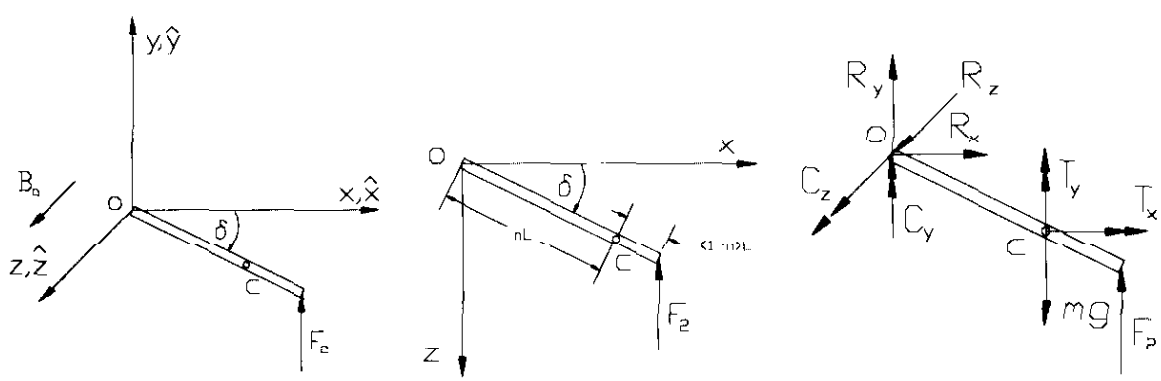

Figure A1.2. Aneurysm clip in Measurement 2 configuration.