This guidance was written prior to the February 27, 1997 implementation of FDA's Good Guidance Practices, GGP's. It does not create or confer rights for or on any person and does not operate to bind FDA or the public. An alternative approach may be used if such approach satisfies the requirements of the applicable statute, regulations, or both. This guidance will be updated in the next revision to include the standard elements of GGP's.

Excerpts Related to EMI from

November 1993

Anesthesiology and Respiratory Devices Branch

Division of Cardiovascular, Respiratory, and Neurological Devices

(7) ELECTROMAGNETIC COMPATIBILITY Devices should be tested for electromagnetic emissions and immunity to electromagnetic interference as described herein. Devices should be tested with the third wire ground connected at the plug end of the power cord. Devices intended for home use should be tested with the third wire ground connected and with it disconnected at the plug end of the power cord.

(i) EMISSIONS Emissions measurements should be made as specified in the referenced document. The required emission limit should be that specified by the referenced document, adjusted downward by the rms sum of all errors in the measurement of that quantity. Emission in excess of the adjusted limit should constitute failure of this test. These tests should be conducted using passive patient simulators, which in general are not capable of simulating normal patient signals.

(a) RADIATED AND CONDUCTED ELECTROMAGNETIC ENERGY The device should be tested according to CISPR 11.

(b) MAGNETIC FIELDS The device should be tested for radiated magnetic field emissions between 30 Hz and 100 kHz as specified in RE101 of MIL-STD-462D, using the Army 7-cm limit. Measurements should be made at the 7-cm distance only.

(ii) IMMUNITY Immunity of the device to electromagnetic interference should be determined as specified in the referenced document, with the modifications listed below. The required immunity level should be the level stated, adjusted upward by the rms sum of

all errors in the measurement of that quantity, with the exception of the lower steady-state ac voltage limit and the line-voltage sag level, which should be adjusted downward by the rms sum of the measurement errors. Any of the following should constitute failure of this test: an equipment alarm, temporary degradation or loss of function or performance which requires operator intervention or system reset, or loss or corruption of stored data. Patient simulators should be used to provide simulated normal stimulus to sensors during electromagnetic immunity testing.

(a) ELECTROSTATIC DISCHARGE The device should be tested with air discharges at 2, 4, 6, and 8 kV applied to insulating surfaces and contact discharges at 2, 4, and 6 kV applied to conductive surfaces. Failure to resume normal operation (with no operator intervention) within 5 seconds of a discharge should constitute failure of this test. All test failure conditions listed above apply. The device should be tested according to IEC 801-2, with the following conditions and modifications:

(1) The device should be tested according to the test method described in IEC 801-2 for table-top equipment.

(2) The relative humidity should not exceed 50 percent during air discharges.

(3) Air discharges should be conducted at 2, 4, 6, and 8 kV. Contact discharges should be conducted at 2, 4, and 6 kV. Discharges of both positive and negative polarity should be conducted at each voltage.

(4) In addition to air and contact discharges directly to the device, contact discharges should be made to the horizontal coupling plane under the device and to the vertical coupling plane positioned parallel to the faces of the device. At least 10 single discharges at each test voltage and polarity should be applied to each test point.

(b) RADIATED ELECTROMAGNETIC FIELDS

(1) TEST CONDITIONS

(i) The device should be tested for immunity to radiated electromagnetic energy over the frequency range 26 MHz to 1 GHz at a field strength of 3 V/m. The RF carrier should be amplitude modulated 80 percent by a sine wave or 100 percent with a square wave (see Figure 1). A modulation frequency that is within each significant signal-processing passband of the device should be used. For devices not having a defined passband, a modulation frequency of 0.5 Hz should be used. The modulation frequency should be specified in the 510(k) premarket application.

(ii) If a continuous sweep of the test frequency is used, the sweep rate should not exceed 0.1 MHz/second.

If the sweep is incremental, the step size should not exceed 1 MHz and the dwell time at each frequency should be 10 seconds.

(iii) Devices which can operate from both line and battery power should be tested both with the ac power connection (e.g., power cord, battery charger) attached and detached from the device.

(iv) Patient simulators used during the test should be either simple passive devices, isolated from earth ground using fiber optics, or battery operated and shielded.

(v) Connections not normally used during device operation that are made to the device to assess performance during the test should be isolated using fiber optics.

(vi) The radiated electric field should be linearly polarized. The test should be performed with both horizontal and vertical polarization.

(vii) A planar area of uniform field should be established, as shown in Figure 2, that contains the front surface of all components of the device under test, including cables. The boundaries of the area of uniform field should include the maximum planar area occupied in any orientation of the parts of the device. The E-field should be measured at multiple points within the area of uniform field, with all accessories and physical components of the device removed from the field.

Within the area of uniform field, the uniformity of the component of the electric field that is aligned with the intended E-field polarization should be -0, +6 dB, measured with no amplitude modulation present on the exposure field. At a minimum, point measurements should be performed at every incremental frequency in the 26 to 1000 MHz frequency range as specified in (7)(ii)(b)(1)(ii). E-field measurements should be made at uniformly spaced points throughout the entire surface of the area of uniform field for both horizontal and vertical polarization. The spacing between these points in both the vertical and horizontal directions should be 0.5 m or less. At each point, the component of the E-field that is aligned with the intended polarization should not differ from the total E-field at that point by more than 3 dB.

For a given facility, if placement of absorber, antennas, and area of uniform field are carefully reproduced, it should be necessary to map the area of uniform field only occasionally, e.g. once per year.

Prior to a series of tests, the area of uniform field should be checked along a vertical line near the center, with measurements made at uniformly spaced points having a spacing of 0.5 m or less. The E-field measured at these points should meet the uniformity requirements specified above.

RF electric field instruments and measurement procedures should meet the requirements of ANSI/IEEE C95.3 - 1991. The instruments should not perturb the E-fields being measured by more than 2 dB and should measure local E-field strength with an error of less than ±3 dB over the frequency range of use. The field-sensing elements of the instrument should fit within a spherical volume with a diameter of 15 cm. The instrument should be capable of measuring the magnitude of each of the three orthogonal components of the electric field. In addition, the instrument should be capable of determining the total electric field strength (the square root of the sum of the squares of the three E-field vector components). The above measurements should be measured accurately (±1 dB) regardless of the direction of the radiated electric field (i.e., the field measuring instrument should be isotropic).

(viii) When practical, the test should be repeated with each of the six faces of the device facing the antenna. To the extent possible, all cables should be horizontal over the majority of their length throughout the test.

(ix) One or more of the following exposure methods should be used: (1) an open-area test site, with the signal and power leads fully extended horizontally; (2) an anechoic chamber; (3) a parallel-plate line; (4) a screen room; (5) a semi-anechoic chamber; or (6) a TEM cell. In order to cover the entire frequency range, combinations of several exposure methods may be used over the portions of the range for which they are most appropriate. Where the methods yield different results, the open-site test should take precedence from 26 to 200 MHz and the anechoic chamber test should take precedence from 200 MHz to 1 GHz.

(2) TEST SETUP

(i) When practical, all device components and cables should be elevated at least 0.8 m above any conducting ground plane by low dielectric constant (<2.5), nonconducting RF-transparent material. When this is not possible, device components should be mounted on a bulk non-conducting support at least 0.1 m high. All device components should be at least 0.8 m away from any RF-reflecting

objects (e.g., walls of the exposure facility). The distance may need to be increased at certain frequencies to achieve the required field uniformity.

(ii) For exposure methods in which the device cables cannot be extended fully, if the length of any conducting cable is 1 m or less, it should be arranged horizontally in the planar area of uniform field. If the length of any conducting cable is greater than 1 m in length, up to the first three meters should be bundled in a serpentine configuration in the planar area of uniform field as shown in Figure 3. Conductive leads should be configured on a clean, dry, plastic foam (e.g., Styrofoam[R]) sheet with the dimensions and construction shown in Figure 3. Support pegs should be made of dielectric (e.g., Teflon[R]) rods (one quarter inch in diameter). Cables in excess of 3 m should be bundled low-inductively and placed on the non-conducting support.

(iii) RF/EMI filters should be used at the device's ac power plug as shown in Figure 2.

(c) AC VOLTAGE FLUCTUATIONS, TRANSIENTS, AND SURGES The tests described below should be performed on all devices intended to recharge batteries or operate from the ac power line.

(1) STEADY-STATE VOLTAGE

(i) Raise the line voltage to 132 volts rms and allow the device to stabilize. Test device operation according to sections (k) and (l). Repeat for a voltage of 95 volts rms.

(ii) For devices with battery backup, simulate normal patient signals while reducing the line voltage to zero. Record the voltage at which the device switches to battery power. In addition to the failure criteria listed above, failure of the device to automatically switch to battery power, or switching to battery power before the line voltage reaches 95 volts rms should constitute failure of this test. Continue to test device operation while raising the line voltage to 120 volts rms. In addition to the failure criteria listed above, failure of the device to automatically switch to line power when the line voltage exceeds 95 volts rms should constitute failure of this test.

(2) DROPOUT Operate the device at 95 volts rms, lower the line voltage to 0 volts for 10 milliseconds, and then restore it to 95 volts rms, doing so 10 times at a rate not to exceed 30 per minute.

(3) SLOW SAGS AND SURGES Operate the device at 120 volts rms. Raise the line voltage to 150 volts rms for 500 ms. Repeat at 10-second intervals for a total of 10 times. Again operate the device at 120 volts rms. Lower the line voltage to 90 volts rms for 500 ms. Repeat at 10-second intervals for a total of 10 times.

(4) FAST TRANSIENT BURSTS Test ac power leads and signal leads according to IEC 801-4 for type test of table-top equipment, with the exception that the burst repetition frequency should not exceed 30 per minute. Test supply leads at 0.5, 1, and 2 kV, and signal leads at 0.25, 0.5, and 1 kV.

(5) FAST SURGES

(i) TEST GENERATOR

(A) A simplified circuit diagram of the test generator is shown in Figure 4. The values of elements R_{s1}, R_{s2}, R_m, L_r, and C_c are such that the generator delivers at a single output a combination voltage/current wave characterized by a 1.2/50 us voltage surge when measured across a high-resistance load (more than 100 ohms) and a 8/20 us current surge when measured into a short circuit, i.e. the generator has an effective output impedance of 2 ohms.

(B) The generator should be capable of producing an open circuit output voltage of up to 2 kV, both positive and negative polarity, with wave shape as shown in Figure 5. The generator should be capable of delivering short circuit output current of at least 1 kA, with wave shape as shown in Figure 6.

The generator should be triggerable so that the phase angle of the discharge can be set at 0, 90, 180, and 270 degrees with respect to the ac line voltage.

(ii) TEST SETUP

(A) Capacitive coupling should be used to apply the combination wave to the ac power leads of the device under test.

(B) A decoupling network should be used to isolate the device under test from the ac power network. Residual test pulse voltage on unsurged leads should not exceed 15 percent of the maximum applied test voltage when the device is disconnected. Residual test pulse voltage on the inputs of the decoupling network when the device and the power supply network are disconnected should not exceed 10 percent of the applied test voltage or twice the peak value of the power line voltage, whichever is greater.

(C) Surges should be applied at the point where the device would normally be connected to ac line power.

(D) For the line-to-line test, the equipment should be connected as shown in Figure 7. An 18-uF coupling capacitor should be used.

(E) The equipment should be connected as shown in Figure 8 for the line-to-ground tests. A 10-ohm resistor should be used in series with the test generator and a 9-uF coupling capacitor should be used.

(iii) TEST PROCEDURE

(A) The line-to-line test should be performed using 1-kV surges of both positive and negative polarity applied using a generator source impedance of 2 ohms and coupling capacitance of 18 uF with the generator output floating as shown in Figure 7.

(B) The line-to-ground test should be performed using 2-kV surges of both positive and negative polarity applied using a generator source impedance of 12 ohms and coupling capacitance of 9 uF with the generator output grounded as shown in Figure 8. The test should be repeated with surges applied successively between each line and ground.

(C) Surges at each amplitude and polarity should be applied at phase angles of 0, 90, 180, and 270 degrees with respect to the ac line.

(D) Each test should be repeated 10 times at a rate of 1 surge per minute.

(d) CONDUCTED ELECTROMAGNETIC ENERGY The device should be tested for immunity to conducted electromagnetic energy on each power and signal lead at frequencies between 10 kHz and 100 MHz at the levels specified in curve #3 of CS114 of MIL-STD-461D, using the test methods specified in CS114 of MIL-STD-462D, with the modifications and additions listed below.

(1) If continuous sweep of the test frequency is used, the sweep rate should not exceed 1×10^{-3} decades/second. If the sweep is incremental, the step size should not exceed 1 percent of decade, and the minimum dwell time is 10 seconds per step.

(2) A modulation frequency that is within each significant signal-processing passband of the device should be used. For devices not having a defined passband, a modulation frequency of 0.5 Hz should be used.

(3) The leads under test should be elevated 5 cm above the ground plane.

(4) For power cables, the interference signal should be injected at a distance of 5 cm from the point at which ac line power enters the device. For battery chargers which plug directly into ac outlets, a 10 cm length of wire should be added between the LISN and the charger, and the test signal should be injected 5 cm from the charger. The low-voltage output cable of the charger should be elevated 5 cm above the ground plane.

(e) MAGNETIC FIELDS Test according to RS101 of MIL-STD-462D. The test should be performed from 30 Hz to 100 kHz.

(f) QUASI-STATIC ELECTRIC FIELDS

(1) TEST SETUP

(i) The device should be tested between parallel horizontal planes. They should be metallic sheets (copper or aluminum) of 0.25 mm minimum thickness which extend at least 0.1 m beyond the device. The horizontal planes should be separated by insulating material, with a separation at least three times the height of the device in the position of normal use.

(ii) The device should be supported by insulating material so that it is positioned entirely between 1/3 and 2/3 the distance between the horizontal planes.

(iii) Cables and tubing should be supported by insulating material at a height above the bottom horizontal plane of 1/3 the distance between the

planes and should exit the test apparatus and continue at this height for at least 0.1 meter beyond the horizontal planes.

(iv) The output of a signal generator capable of producing a sinusoidally varying voltage at a frequency of 0.5 Hz with amplitude sufficient to produce peak electric field strengths up to 2000 V/m between the horizontal planes should be connected to the horizontal planes.

Note: Ep = Vp/D, where Ep is the peak field strength in V/m, Vp is the peak of the signal generator output voltage waveform, and D is the distance between the horizontal planes in meters.

(2) TEST PROCEDURE Adjust the signal generator peak output voltage such that the device is exposed to a sinusoidally varying electric field at 0.5 Hz with peak field strength of 500 V/m. Gradually increase the peak field strength to 2000 V/m.

(8) AUXILIARY OUTPUT If the device is provided with an auxiliary output:

(i) This output should be short-circuited (all pins connected together) for at least 1 minute, with the device in the standard operating modes. During and after application of the short-circuit, the device should operate within its specification.

(ii) With the auxiliary output connected as specified by the manufacturer, test device per (m)(6).

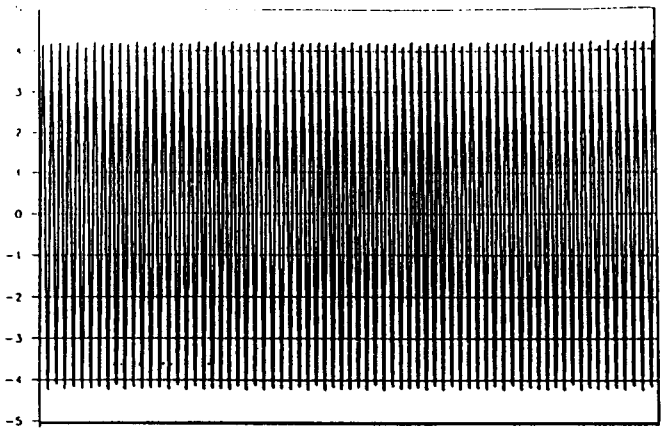

a) Unmodulated RF signal. E_{p-p} = 8.48 V/m, E_{rms} = 3 V/m

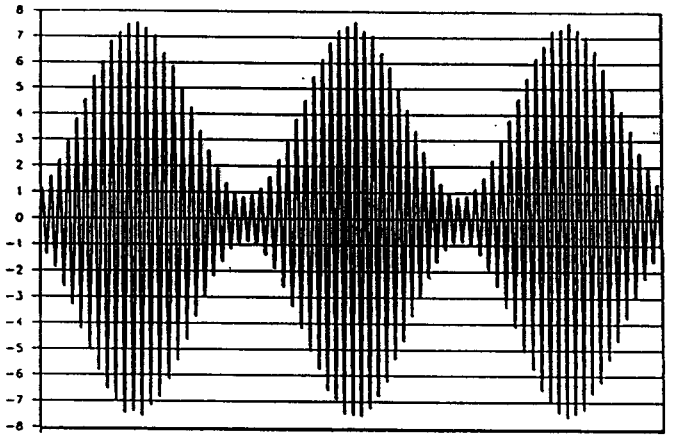

b) Modulated RF signal, 80% sine-wave AM. E_{p-p} = 15.3 V/m, E_{rms} = 3.36 V/m

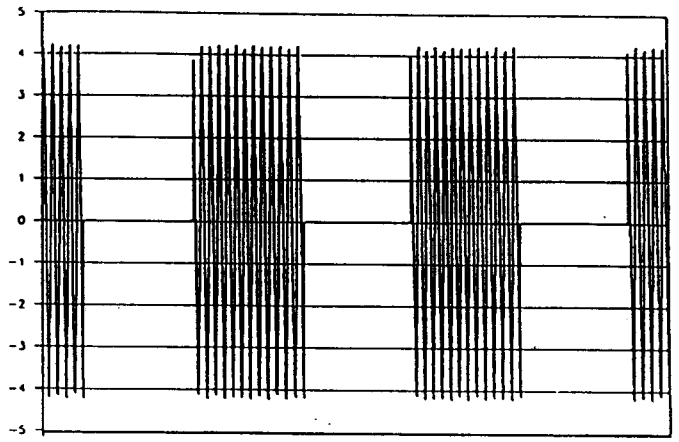

c) Modulated RF signal, 100% square-wave AM. E_{p-p} = 8.48 V/m, E_{rms} = 2.12 V/m

Figure 1. RF Waveshapes

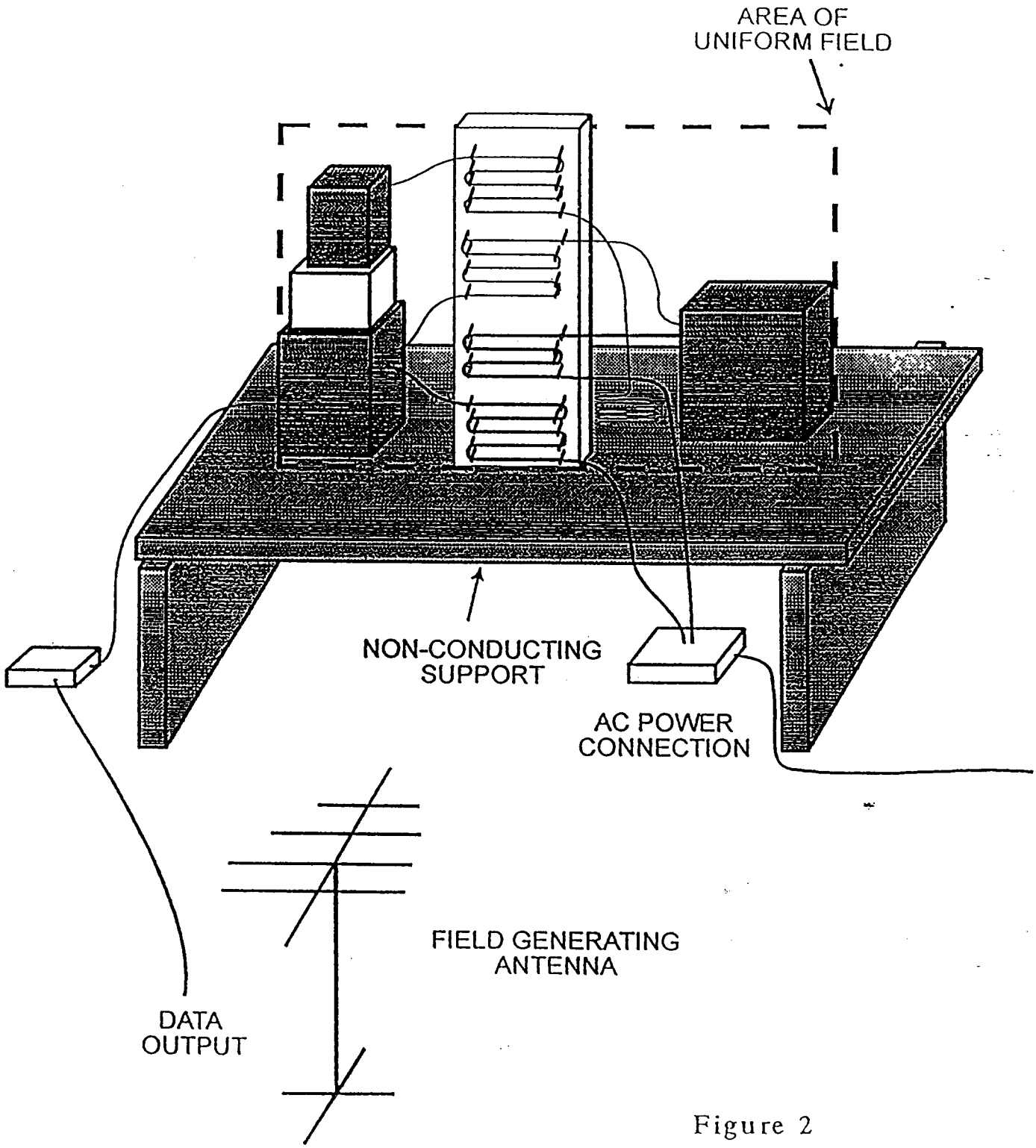
AREA OF
UNIFORM FIELD
NON-CONDUCTING
SUPPORT
AC POWER
CONNECTION
FIELD GENERATING
ANTENNA
DATA
OUTPUT

Figure 2

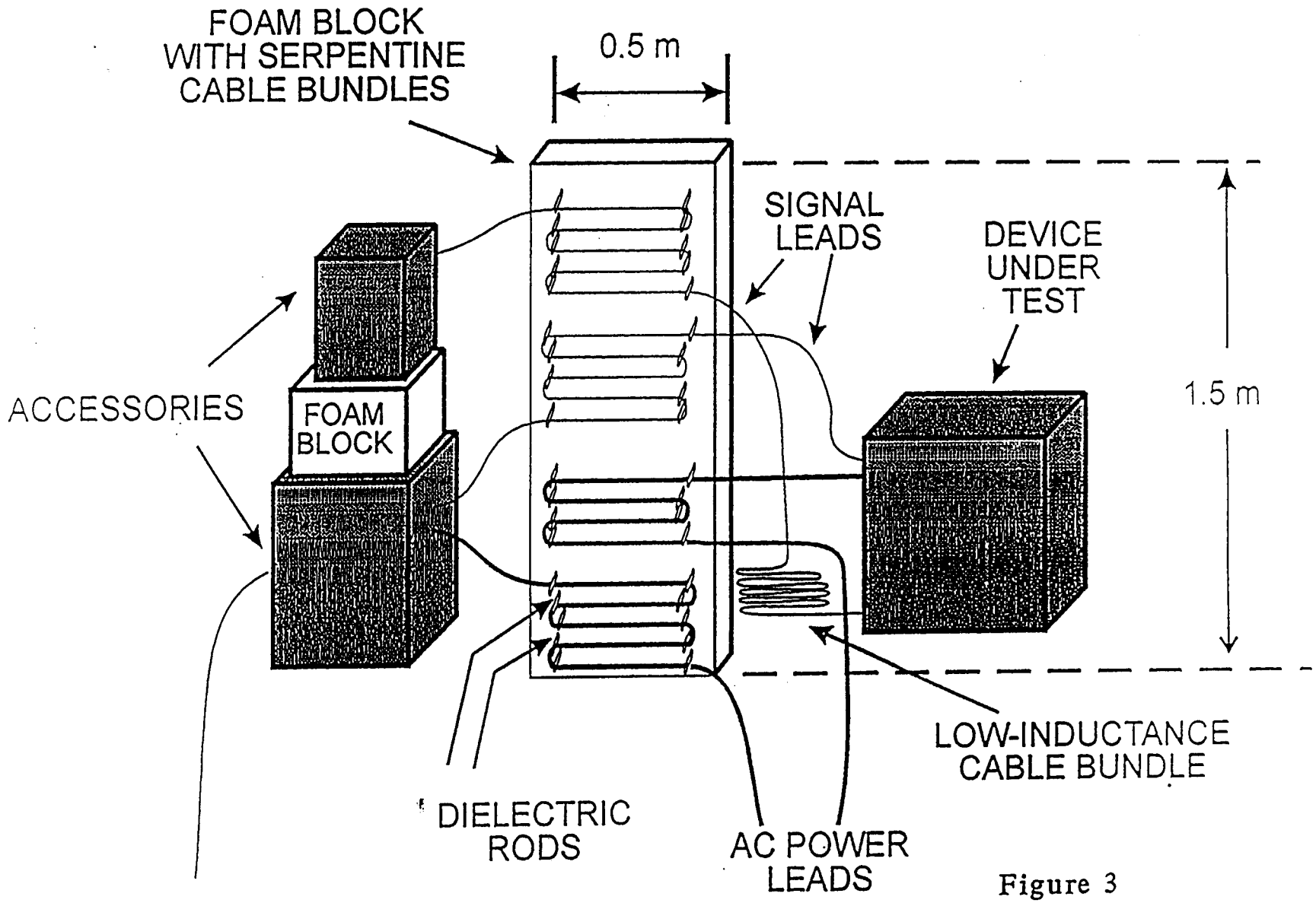
FOAM BLOCK
WITH SERPENTINE
CABLE BUNDLES
0.5 m
SIGNAL
LEADS
DEVICE
UNDER
TEST
1.5 m
ACCESSORIES
FOAM
BLOCK
LOW-INDUCTANCE
CABLE BUNDLE
DIELECTRIC
RODS
AC POWER
LEADS

Figure 3

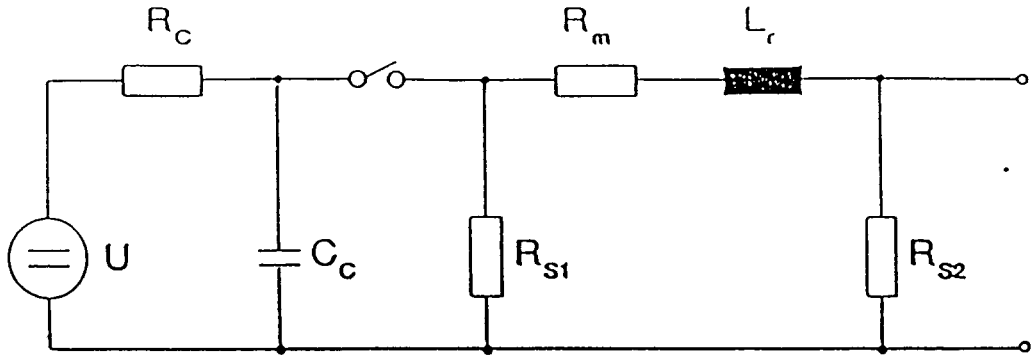

U	High Voltage Source
R_c	Charging Resistor
C_c	Energy Storage Capacitor
R_s	Pulse Duration Shaping Resistor
R_m	Impedance Matching Resistor
L_r	Risetime Shaping Inductor

Figure 4. Simplified circuit diagram of combination wave generator

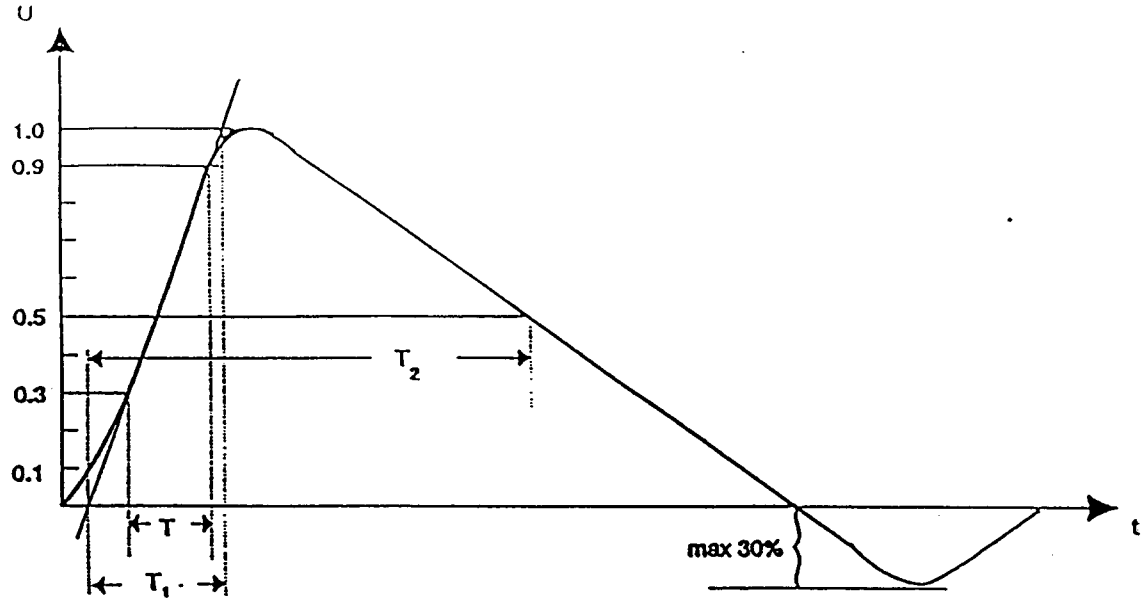

Front time: $T_1 = 1{,}67 \times T = 1{,}2\ \mu s \pm 30\%$
Time to half value: $T_2 = 50\ \mu s \pm 20\%$

Figure 5. Waveshape of open-circuit voltage (1.2/50 μs)

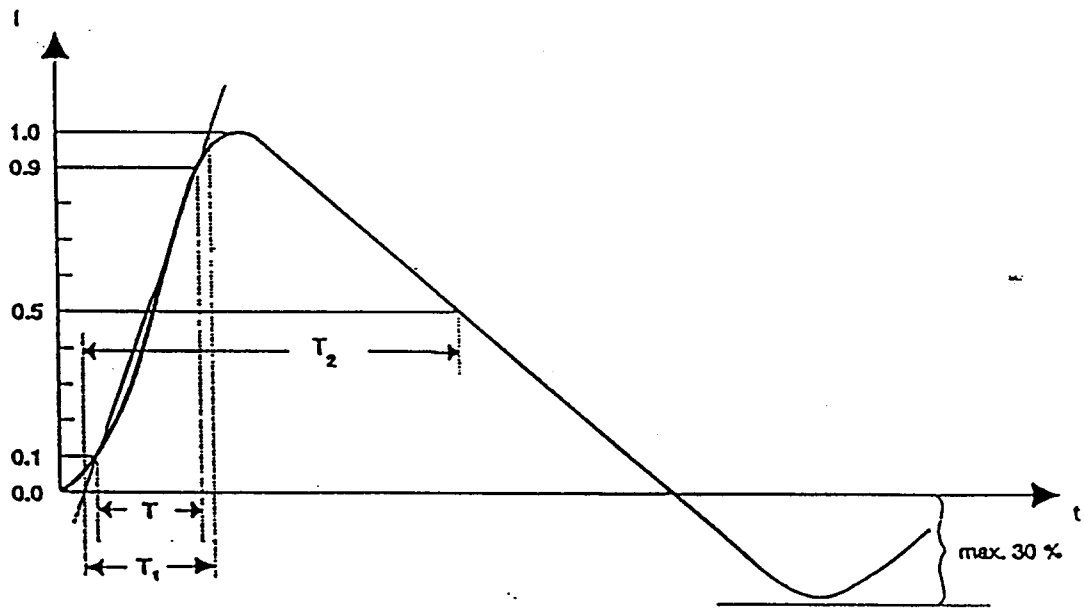

Front time: $T_1 = 1{,}25 \times T = 8\ \mu s \pm 20\%$
Time to half value: $T_2 = 20\ \mu s \pm 20\%$

Figure 6. Waveshape of short-circuit current (8/20 μs)

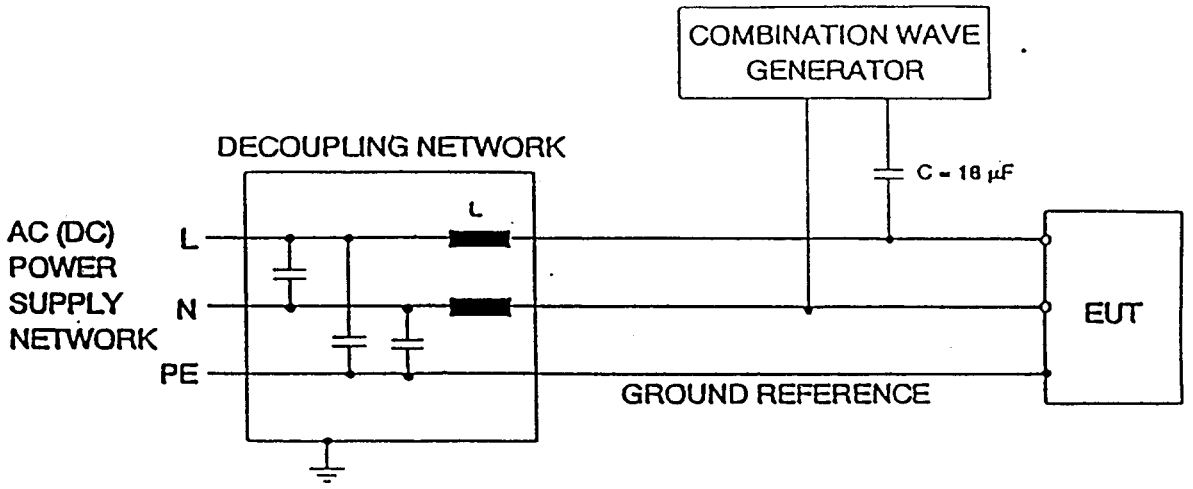

Figure 7. Setup for line-to-line surge test

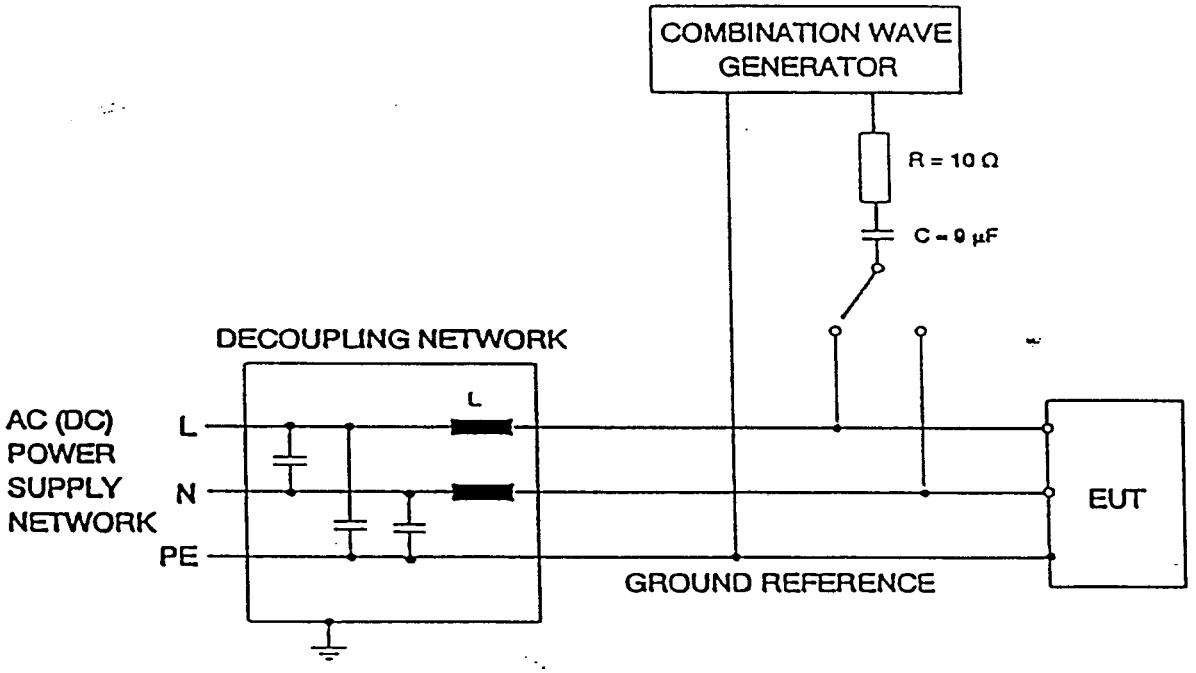

Figure 8. Setup for line-to-ground tests

(n) TEST METHODS - MECHANICAL AND ENVIRONMENTAL

(1) CONTROLS PROTECTION Test by inspection.

(2) CONNECTOR PROTECTIVE INCOMPATIBILITY Test by inspection and by attempting the prohibited connections.

(3) MECHANICAL SAFETY Test by inspection.

(4) MECHANICAL VIBRATION AND SHOCK RESISTANCE Test the device (i.e., the complete system suitable for its intended use) to the following severity levels as specified in the following IEC 68-2 Basic Environmental Testing Procedures. Following each of these tests, the device should be visually inspected. Any evidence of damage or inability to perform within specification should constitute failure of the test.

(i) IEC 68-2-27: SHOCK
Peak acceleration: 100 g (980 m/s^2)
Duration: 6 msec
Pulse shape: half sine

(ii) IEC 68-2-6 SINUSOIDAL VIBRATION
Frequency range: 10 to 500 Hz
Acceleration amplitude: 1 g (9.8 m/s^2)
Type and duration of endurance: 10 sweep cycles in each axis.

(iii) IEC 68-2-34 RANDOM VIBRATION, WIDE BAND
Frequency range: 20 Hz - 500 Hz
Acceleration spectral density: 0.02 g^2/Hz
Degree of reproducibility: low
Duration of conditioning: 9 minutes

(5) FLUID SPILL RESISTANCE Test the device as specified in Clause 44.6 of IEC 601-1 for drip-proof and equipment. Following each of these tests, the device should be visually inspected. Any evidence of damage or inability to perform within specification should constitute failure of the test.

(6) HIGH AND LOW TEMPERATURE AND HUMIDITY Test the device as specified in Method Numbers 501.3, 502.3, and 507.3 of MIL-STD-810E according to the requirements of section (i)(6) of this document. Failure of the device to perform within its specification should constitute failure of these tests.

(7) SURFACE TEMPERATURE Operate the device in an ambient temperature of 35°C. Measure the temperature of the device surfaces which are not intended to contact the patient. The presence of any temperature greater than 50°C should constitute failure of this test. Measure the temperature of device surfaces which are likely to contact the patient in normal use. Any temperature above 41°C should constitute failure of this test. If a surface temperature that may come in contact with the patient exceeds 41°C, and this surface temperature can be justified with a scientifically valid explanation and data is available demonstrating

that the safety of the patient is not compromised, then this information should be provided in the premarket notification submission.

(8) TOXIC MATERIALS Determine by inspection that listed and any other known toxic materials used in the device are packaged in a manner that prevents patient and operator contact.

(9) STRANGULATION Test by inspection.

(o) TEST METHODS - LABELING The requirements of section (j) are tested by inspection.

6.38

This document can be obtained from National Technical Information Service (NTIS), U.S. Department of Commerce, 5285 Port Royal Road, Springfield, Virginia 22161.

The Accession Number is: PB-80180284 The telephone number at NTIS is (703)-487-4650

FDA MEDICAL DEVICE STANDARDS PUBLICATIO

ELECTROMAGNETIC COMPATIBILITY STANDARD FOR MEDICAL DEVICES

MDS-201-0004

OCTOBER 1, 1979

U.S. DEPARTMENT OF HEALTH, EDUCATION, AND WELFARE
PUBLIC HEALTH SERVICE / FOOD AND DRUG ADMINISTRATION / BUREAU OF MEDICAL DEVICES
8757 GEORGIA AVENUE / SILVER SPRING, MARYLAND 20910

FOREWORD

Under the provisions of the Federal Food, Drug, and Cosmetic Act, the Food and Drug Administration is charged with certain responsibilities and regulatory authority to implement programs that will provide reasonable assurance of the safety and effectiveness of medical devices. In partial fulfillment of that charge, the Bureau of Medical Devices maintains a standards program, consisting of:

1. development of performance standards;

2. technical support of and participation with voluntary standards organizations;

3. problem definition studies, for use in standards development;

4. publication of standards and reports of studies sponsored by the Bureau.

This publication is a medical device performance standard, developed by the Bureau of Medical Devices, Division of General Medical Device Standards. The technical content of this standard is based on work performed by McDonnell Douglas Astronautics Co.-East, under FDA Contract 223-74-5246. Drafts of this standard have been widely reviewed and comments received from users, manufacturers, government agencies, and independent consultants and laboratories.

At the time of publication, this standard is not being promulgated under the provisions of Section 514 of the Federal Food, Drug, and Cosmetic Act. Compliance, therefore, is not required by Federal law. Conformance to the requirements in this standard is voluntary. However, readers and potential users of this standard should recognize that compliance may become mandatory under certain circumstances, for example:

1. when referenced in Federal regulations, particularly those promulgated under the provisions of Section 514 of the Federal Food, Drug, and Cosmetic Act;

2. when referenced in regulations promulgated by State and local regulatory agencies; and

3. when referenced in procurement specifications.

This standard is subject to periodic review and revision. Individuals and organizations, desiring to make comments or suggestions concerning this standard, are invited to submit them to:

Division of General Medical Device Standards (HFK-310)
Bureau of Medical Devices
8757 Georgia Avenue
Silver Spring, Maryland 20910

TABLE OF CONTENTS

	Page No.
FOREWORD	i
Section 1 - INTRODUCTION	1
1.1 Scope	1
1.2 Purpose	1
1.3 Voluntary Use of this Standard	1
Section 2 - PRECEDENCE OF DOCUMENTS	2
Section 3 - REQUIREMENTS	3
3.1 Labeling	3
3.2 Emissions	3
3.2.1 General	3
3.2.2 Conducted Emissions	3
3.2.3 Radiated Emissions	3
3.3 Susceptibility	4
3.3.1 General	4
3.3.2 Conducted Susceptibility	4
3.3.3 Electric-field Susceptibility	4
3.3.4 Magnetic-field Susceptibility	4
3.3.5 Transient Susceptibility	4
Section 4 - TEST METHODS	11
4.1 General	11
4.1.1 Use of Test Methods	11
4.1.2 Test Facility	11
4.1.3 Configuration and Operation of Test Sample	11
4.1.4 Configuration During Electric-field Radiated Tests	12
4.1.5 Measuring Frequencies	13
4.2 Emissions	13
4.2.1 Identification of Broadband and Narrowband Emissions	13
4.2.2 Conducted Emission	13
4.2.3 Radiated Emission	14
4.3 Susceptibility	17
4.3.1 Modulation	17
4.3.2 Conducted Susceptibility	17
4.3.3 Electric-field Susceptibility	20
4.3.4 Magnetic-field Susceptibility	22
4.3.5 Transient Susceptibility	22

	Page No.
Section 5 - DEFINITIONS	26
5.1 Abbreviations	26
5.2 Physical Quantities	26
5.3 Multiplying Symbols	26
5.4 Definitions and Terminology	27
Appendix A - RATIONALE	A1
FOREWORD	A2
A3.1 Labeling	A4
A3.2 Emissions	A5
A3.2.1 General	A5
A3.2.2 Conducted Emissions	A5
A3.2.3 Radiated Emissions	A10
A3.3 Susceptibility	A10
A3.3.1 General	A10
A3.3.2 Conducted Susceptibility	A15
A3.3.3 Electric-field Susceptibility	A18
A3.3.4 Magnetic-field Susceptibility	A22
A3.3.5 Transient Susceptibility	A22
A4. Test Methods	A22
References	A25

SECTION 1 INTRODUCTION

1.1 Scope

This standard establishes maximum levels of electromagnetic emissions which medical devices are allowed to produce and it establishes minimum levels of electromagnetic interference to which medical devices must not be susceptible. A section containing test methods is included to provide a consistent means of verifying compliance with the requirements. Appendix A contains a rationale which provides technical support for the requirements and test methods incorporated into this standard.

This standard does not address signal line or patient lead conducted emissions and susceptibility. In addition, the radiated susceptibility limits in this standard do not reflect the severity of the environment which is encountered near electrosurgical units.

1.2 Purpose

The purpose of this standard is two-fold:

1) To serve as a reference document for FDA-promulgated regulations and guidelines in which electromagnetic compatibility requirements are included. In this capacity, the regulations or guidelines which reference this standard must supplement the requirements of this standard by defining the susceptibility degradation criteria and the details of test configuration and test methods for the subject device.

2) To serve as guidance for other devices. In this capacity, this standard must be used with a degree of judgment, bearing in mind that the requirements of this standard are general and do not specify susceptibility degradation criteria or the details of test configuration which may be unique to each device.

1.3 Voluntary Use of this Standard

Manufacturers and users of medical devices are encouraged to utilize and reference this standard. However, this standard cannot be used casually. Manufacturers are cautioned not to make unqualified statements that their products conform to or meet this standard. Any claim of conformance must be accompanied by supplementary information which is described in paragraph 3.1. Users or purchasers of medical devices, similarly, should not require conformance to this standard unless the supplementary information of paragraph 3.1 is either specified by the purchaser or required of the manufacturer as a condition of the sale.

SECTION 2 PRECEDENCE OF DOCUMENTS

When the requirements of this standard conflict with EMC requirements of FDA regulations or guidelines or with EMC requirements of specific-device standards published by FDA, this standard shall take least precedence.

SECTION 3 REQUIREMENTS

3.1 Labeling

Manufacturers claiming conformance to this standard shall provide the following information in the instruction manual:

a. Specific requirements and deviations to which the manufacturer certifies conformance.

b. Specific details of the test setups and test sample control settings and operation during testing which affect the test results and which are not adequately addressed by this standard.

c. Specific susceptibility degradation criteria used during susceptibility testing and a description of insignificant malfunctions, as defined in paragraph 5.4.

3.2 Emissions

3.2.1 General

The device shall not generate electromagnetic emissions in excess of the limit levels contained in this standard when tested in accordance with Section 4. Limits are given for both broadband and narrowband emissions. Identification of broadband and narrowband emissions shall be accomplished using the techniques outlined in paragraph 4.2.1. If a signal is identified as narrowband in one test and broadband in another test, both the narrowband and broadband limits shall apply.

3.2.2 Conducted Emissions

Conducted electromagnetic emissions shall not appear on the power leads of a medical device in excess of the levels shown in Figures 1 and 2. For transient conducted emissions associated with power application (device turn-on) and power removal (device turn-off), the broadband limits, with a 20-dB relaxation, shall apply. Battery-powered devices with integral recharging capability shall be subject to the conducted emissions limits.

3.2.3 Radiated Emissions

Medical devices shall not radiate electric field emissions in excess of the levels shown in Figures 3 and 4. For transient radiated emissions associated with power application (device turn-on) and power removal (device turn-off) the broadband limits, with a 20-dB relaxation, shall apply.

3.3 Susceptibility

3.3.1 General

The device must perform within the manufacturer's labeled performance specifications during exposure to modulated and unmodulated electromagnetic energy at the limit levels contained in this standard when tested in accordance with Section 4. Derated performance or other malfunctions which the manufacturer deems to have an insignificant effect on the safety and effectiveness of the device are allowed, provided that degradation criteria are detailed in the labeling in accordance with paragraph 3.1.

3.3.2 Conducted Susceptibility

The performance characteristics of medical devices shall not be degraded beyond the manufacturer's labeled degradation criteria when subjected to electromagnetic energy injected on its power leads below the levels shown in Figure 5. Battery-powered devices capable of operation during the recharge cycle shall be subject to the conducted susceptibility levels.

3.3.3 Electric-field Susceptibility

The performance characteristics of medical devices shall not be degraded beyond the manufacturer's labeled degradation criteria when subjected to electric fields below the levels shown in Figure 6.

3.3.4 Magnetic-field Susceptibility

The performance characteristics of medical devices shall not be degraded beyond the manufacturer's labeled degradation criteria when subjected to 60-Hz magnetic-field levels less than 1 μT.

3.3.5 Transient Susceptibility

The performance characteristics of medical devices shall not be degraded beyond the manufacturer's labeled degradation criteria when subjected to power line transients having the following characteristics:

AMPLITUDE	<150 V peak
RISE TIME	≤ 3μs (10% - 90% amplitude points)
FALL TIME	≤ 7μs (10% - 90% amplitude points)
PULSE WIDTH	= 10μs ± 1 s (10% amplitude points)

These characteristics shall be exhibited when the transient is generated by a resistive 0.5 ± 0.1 Ω source and loaded by a resistive 5.0 ± 1.0 Ω termination.

Figure 1. MAXIMUM CONDUCTED BROADBAND EMISSION LEVEL, 1 kHz-30 MHz

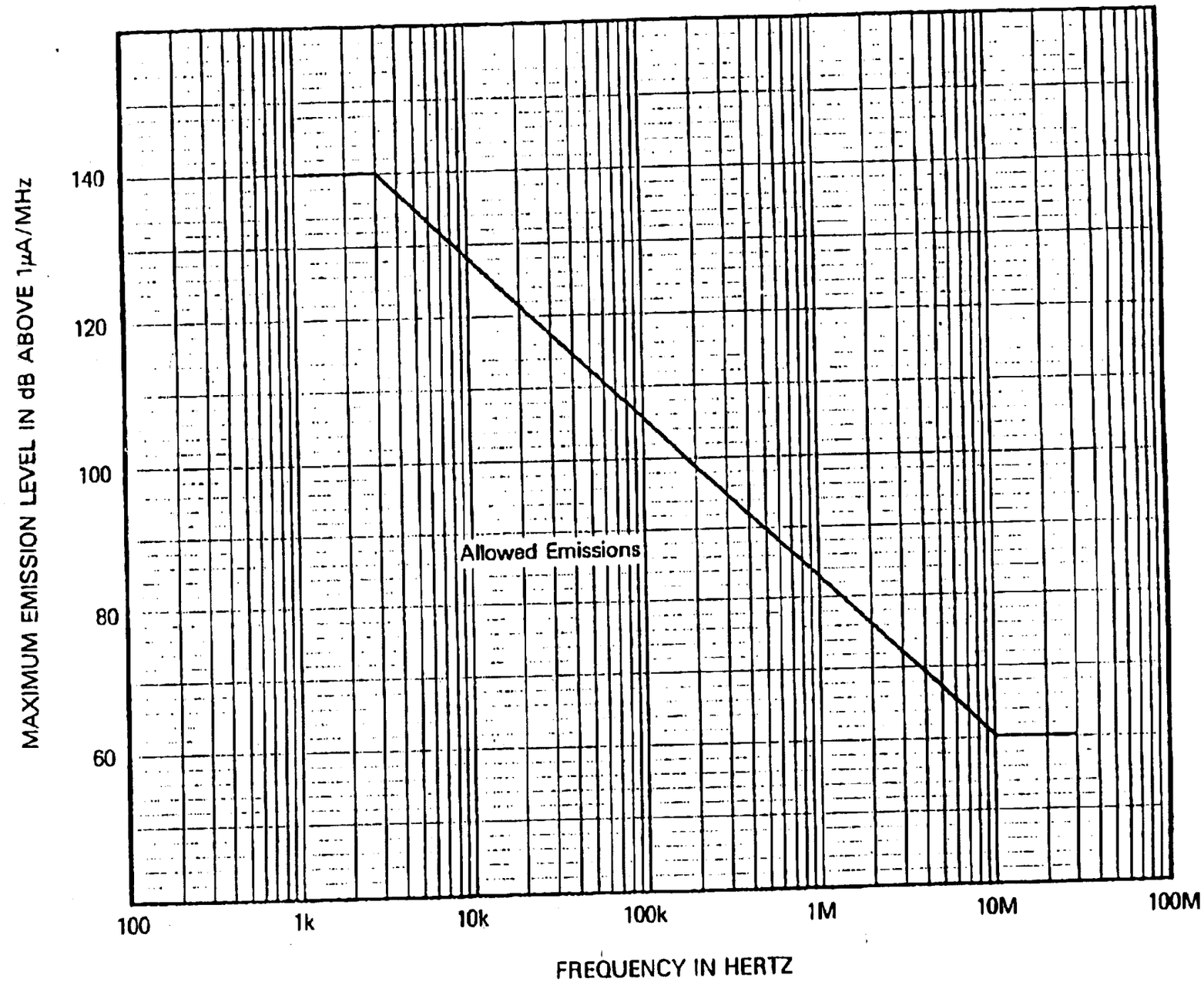

Figure 2. MAXIMUM CONDUCTED NARROWBAND EMISSION LEVEL, 500 Hz-30 MHz

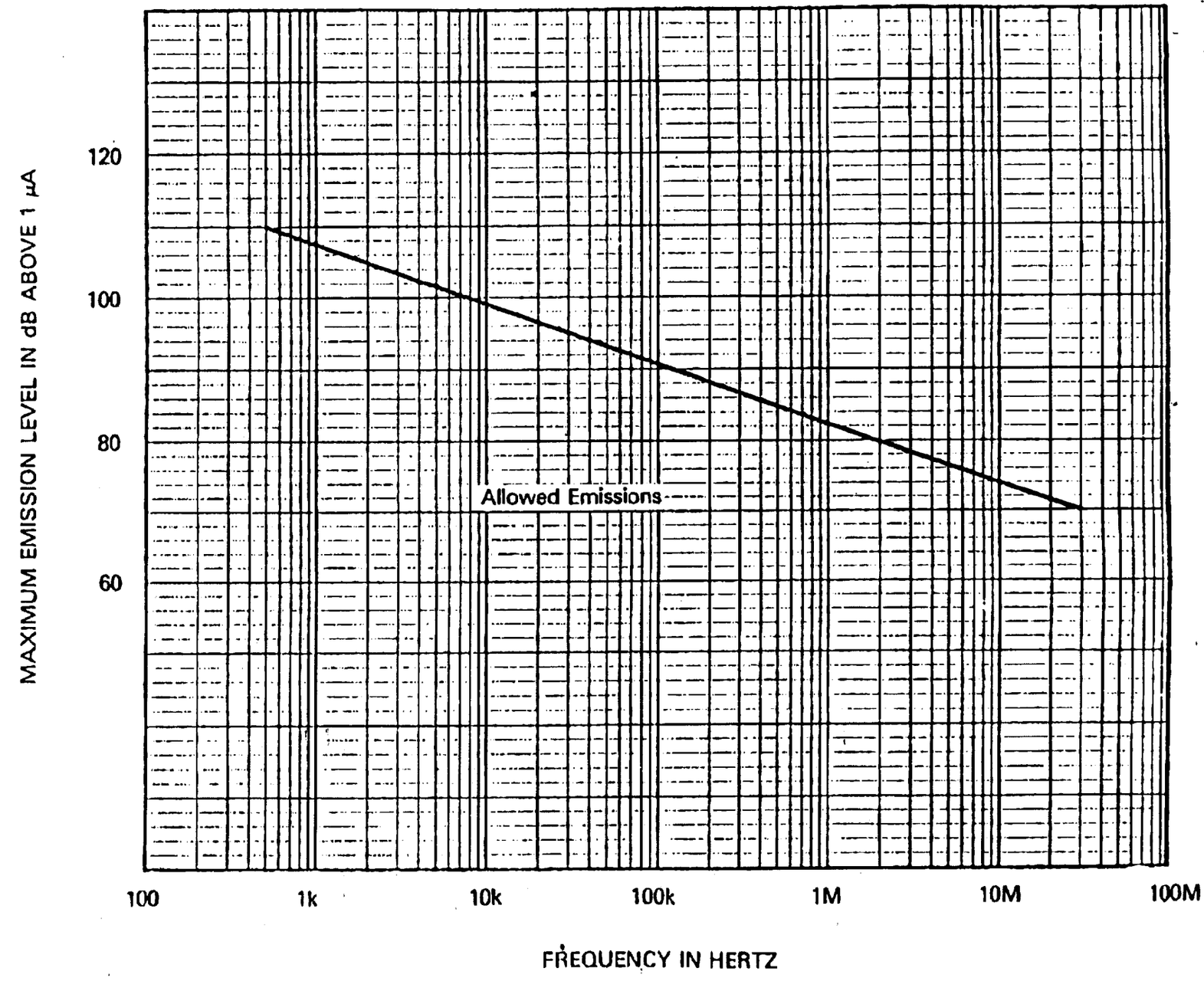

Figure 3. MAXIMUM RADIATED BROADBAND EMISSION LEVEL, 10 kHz-1 GHz

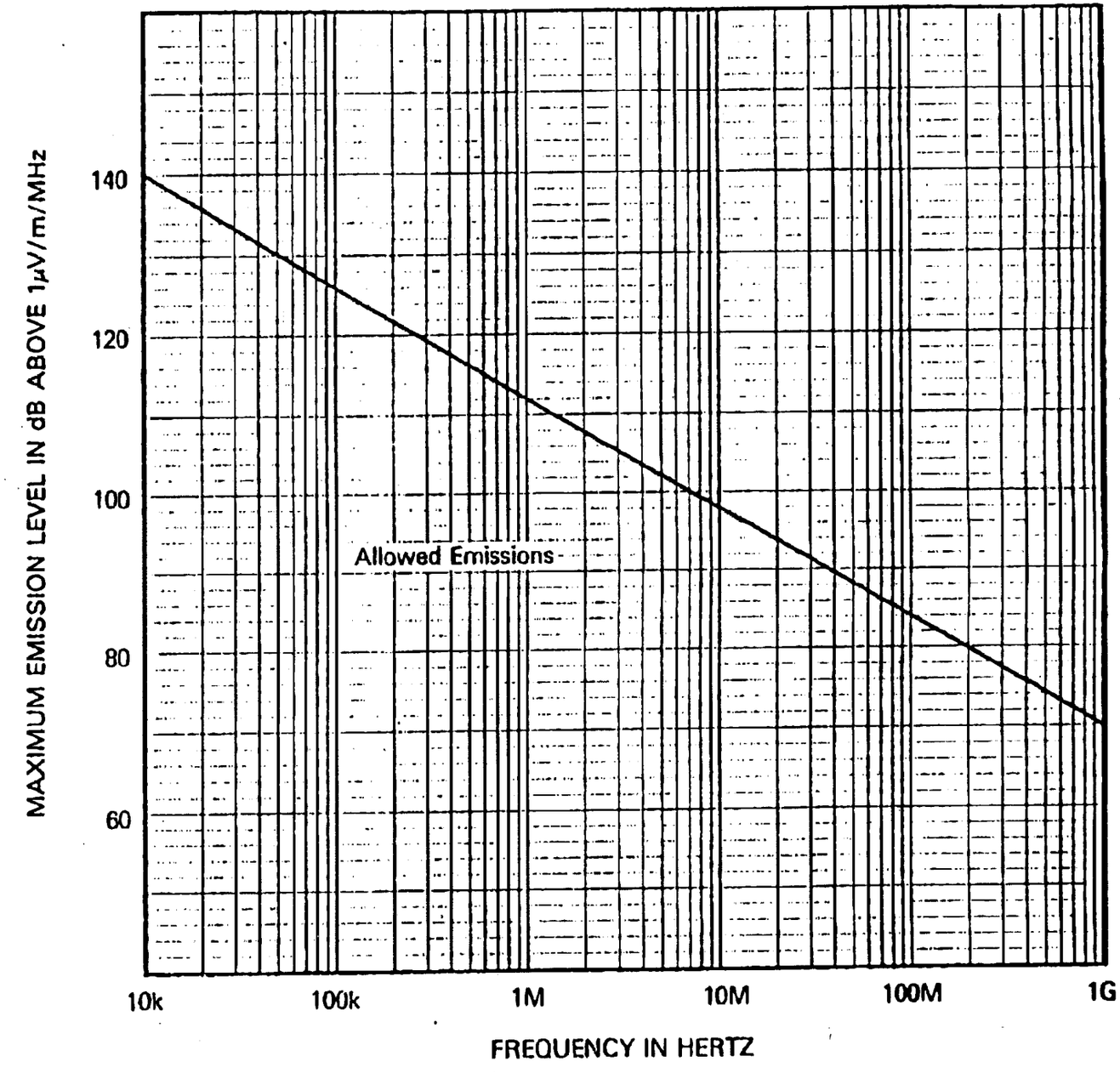

Figure 4. MAXIMUM RADIATED NARROWBAND EMISSION LEVEL, 10 kHz-1 GHz

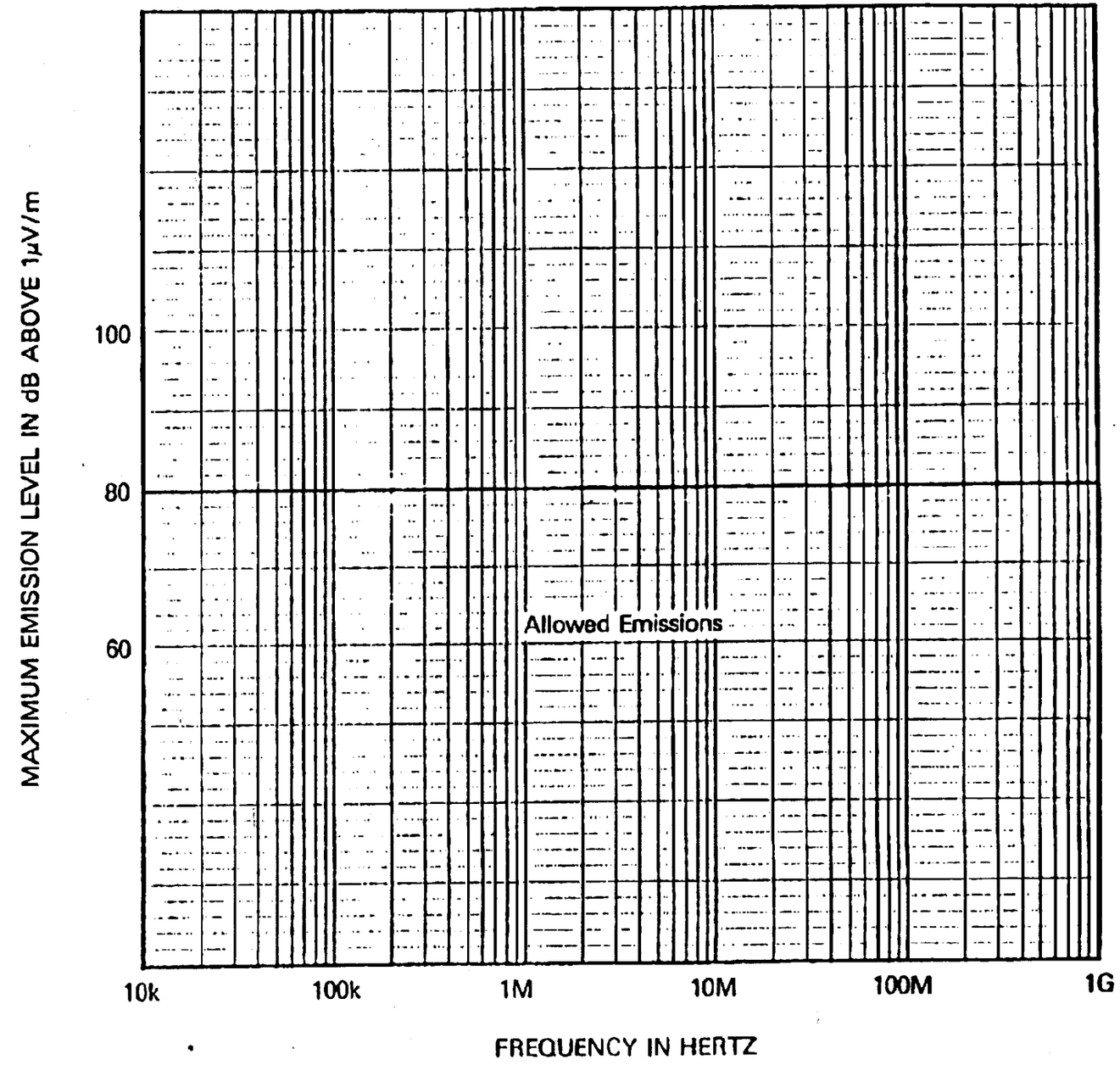

Figure 5. MINIMUM CONDUCTED SUSCEPTIBILITY LEVEL, 100 Hz-30MHz

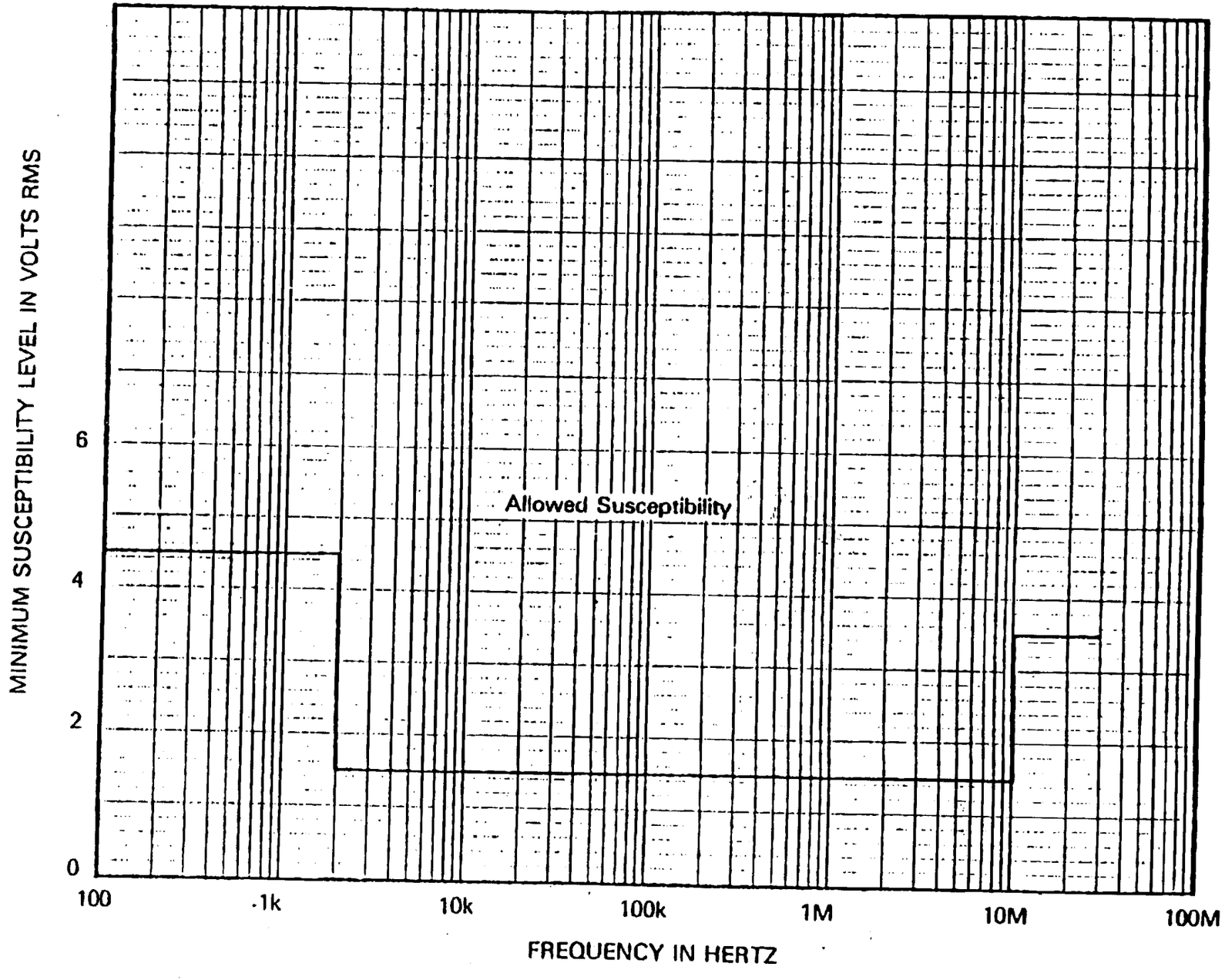

Figure 6. MINIMUM RADIATED ELECTRIC FIELD SUSCEPTIBILITY LEVEL, 10 kHz-1 GHz

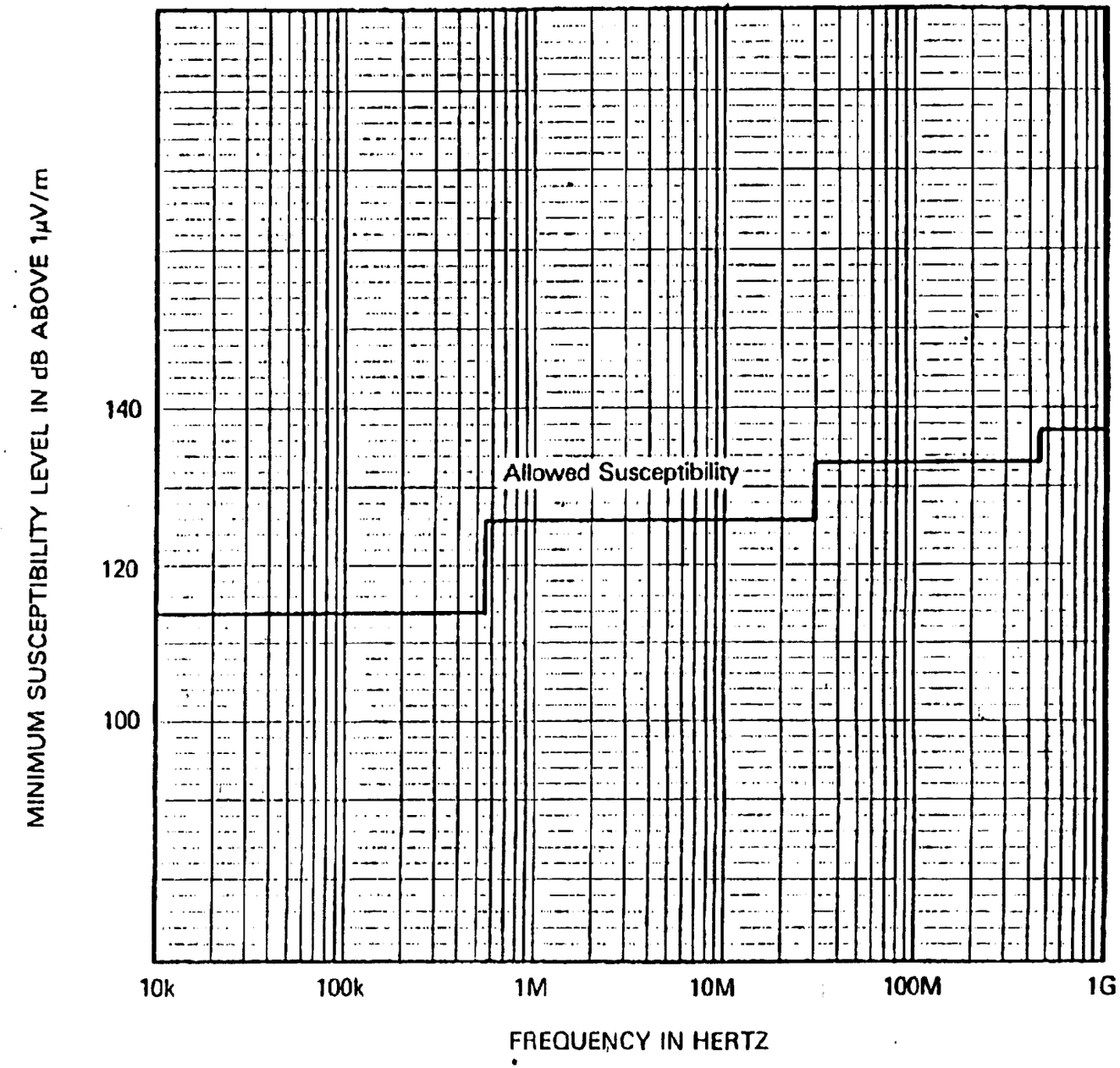

4.1 General

4.1.1 Use of Test Methods

The test methods described herein are referee test methods which will be employed by the FDA to determine conformance with the requirements of Section 3. The inclusion of these test methods in this standard does not constitute a requirement that manufacturers must perform them. Manufacturers are free to perform any type of testing or analyses which the manufacturer feels are appropriate to assure conformance with the requirements of Section 3.

4.1.2 Test Facility

The tests contained herein shall be performed in a shielded enclosure of sufficient size to adequately contain the test sample, test sample cables and applicable EMC test equipment. The ambient electromagnetic field level shall be at least 6 dB below the specified test limit. The shielded enclosure shall contain a solid copper or brass ground plane with a minimum thickness of 0.63 cm. The ground plane shall be of sufficient size to accomodate the test sample, the test sample cables, and any applicable EMC test equipment with a minimum of 50 mm excess at the edges of the ground plane. The ground plane shall be bonded to the shielded room with solid metal straps placed no greater than 1 m apart. The dc resistance between the ground plane and the shielded room shall be 2.5 mΩ or less.

4.1.3 Configuration and Operation of Test Sample

The test sample shall be configured and operated in a manner that simulates its use in a medical facility. When necessary, a dummy load or signal simulator may be employed to duplicate actual equipment operation. If chassis ground is normally provided by the third wire in the power cord, all other ground connections between the test sample and the ground plane shall be interrupted. If chassis ground is normally provided by a separate external strap or wire, the strap or wire shall be connected to the ground plane.

Test sample cables shall be tied together and their full length extended along the front of the ground plane for a distance not to exceed 2 m. Excess cable shall be coiled behind the test sample. Cables extended in such a manner shall be separated from the ground plane by at least 3.5 cm, using nonconductive spacers.

Those items too large or too cumbersome for mounting on a ground plane may be placed on the floor of the shielded room. The test sample cables may be suspended or placed upon a convenient surface adjacent to the test sample.

Proper operation of the test sample shall be monitored during the performance of the susceptibility tests contained herein. If any equipment modifications are performed to provide the capability of remote monitoring, those modifications shall be documented.

4.1.4 Configuration During Electric-Field Radiated Tests

The area(s) producing maximum emission and the area(s) exhibiting the greatest susceptibility shall be oriented to face the test antenna and shall be located 1 m from the test antenna during the respective radiated emission and susceptibility tests. This may be determined by scanning each face of the test sample with an electric-field probe connected to either a receiver or an oscillator.

Alternatively, the test sample may be evaluated to determine which face is most likely to produce emissions and which face is most likely to be susceptible. If the test sample incorporates a metal enclosure or is otherwise shielded to any degree, the evaluation may consist of a simple visual inspection for openings (vents, connectors, meters, etc.) in the chassis. Such openings may be the most likely source of emissions and the most likely access for susceptibility signals.

If the test sample is unshielded, a knowledge of the test sample design is necessary. The most sensitive circuits should face the antenna during susceptibility tests. Relays, oscillators, power supplies, and other strong sources of interference should face the antenna during emissions tests. All test sample cables shall be positioned to allow maximum exposure to the test antenna consistent with the cable routing requirements contained in paragraph 4.1.3.

The ends of the test antenna shall be at least 0.3 m from the floor and ceiling of the shielded enclosure. The test antenna shall be at least 1 m from the sides of the shielded enclosure. The vertical position of the test antenna shall be centered about the vertical position of the test sample and test sample cables. Monitoring antennas used in susceptibility tests shall be located as near to the test sample as possible and in the same plane as the face of the antenna.

4.1.5 Measuring Frequencies

The entire frequency range for each test shall be scanned. The manner in which the frequency range is scanned depends on the nature of the device under test. Devices which have cyclic operations may emit more energy or they may be more susceptible during certain portions of the operating cycle. Devices which emit energy in short, intermittent bursts may necessitate the use of preselected, fixed frequencies. Some devices may not manifest any susceptibility until the interference persists for a period of time. Preselected, fixed frequencies may be more appropriate for these devices also. The determination of a proper scanning technique necessitates an understanding of the operation of the device under test.

Emission signal levels and device response to susceptibility test signals shall be determined at a minimum of three frequencies per octave. The three emission measurements recorded in each octave shall be the maximum levels within the octave. If the test sample has internal oscillators, the frequencies or harmonics of which are within the frequency range of the requirements of this standard, emission and susceptibility measurements shall be made at the oscillator fundamentals and harmonics up to frequencies of ten times the oscillator frequencies. Adjustable oscillators shall be preset to the frequency of usual use which is specified in the device labeling in accordance with paragraph 3.1b.

4.2 Emissions

4.2.1 Identification of Broadband and Narrowband Emissions

Identification of broadband and narrowband emissions shall be accomplished using the techniques outlined below.

Test 1 - Tune the EMC receiver over a range of plus or minus 2 impulse bandwidths around the center frequency of the emission. Any change in peak response greater than 3 dB indicates a narrowband signal.

Test 2 - Measure the pulse repetition rate of the signal. If the pulse repetition rate (in hertz) is less than or equal to the impulse bandwidth (in hertz) of the EMC receiver, the signal is a broadband signal. If the pulse repetition rate is greater than the impulse bandwidth of the EMC receiver, the signal is narrowband.

4.2.2 Conducted Emission

This procedure is used for measuring emissions on all power leads.

a. Set up the test sample and test apparatus in accordance with Figure 7.

b. Position the current probe for maximum emission.

c. Scan through the frequency range in accordance with the requirements of paragraph 4.1.5. For each requirement, record the frequency, amplitude, and type (narrowband or broadband) of emission. Verify the measured emissions do not exceed the applicable limits shown in Figure 1 or 2.

d. Repeat the test procedure for each power lead.

e. Cycle the device power switch on and off. Measure the transient emissions and verify these emissions do not exceed the limits shown in Figure 1 by more than 20 dB. Transient emission measurements may be made at only one frequency per octave.

4.2.3 Radiated Emission

This procedure is used for measuring radiated electromagnetic emissions.

a. Set up the test sample and test apparatus in accordance with Figure 8.

b. Position the surface producing the maximum emissions toward the test antenna. Position the test sample cables in accordance with paragraph 4.1.3.

c. Scan the frequency range in accordance with the requirements of paragraph 4.1.5. For each measurement, record the frequency, amplitude and type (narrowband or broadband) of emission. Verify the measured emissions do not exceed the applicable levels shown in Figures 3 or 4.

d. If a linearly polarized antenna is used, rotate the antenna 90° and repeat step c. This does not apply to monopole or dipole antennas below 200 MHz.

e. If other surfaces of the test sample produce significant emissions, position those surfaces toward the test antenna and repeat steps c and d.

f. Cycle the device power switch on and off. Measure the transient emissions and verify these emissions do not exceed the levels shown in Figure 3 by more than 20 dB. Transient emission measurements may be made at only one frequency per octave.

Figure 7. CONDUCTED EMISSION TEST CONFIGURATION

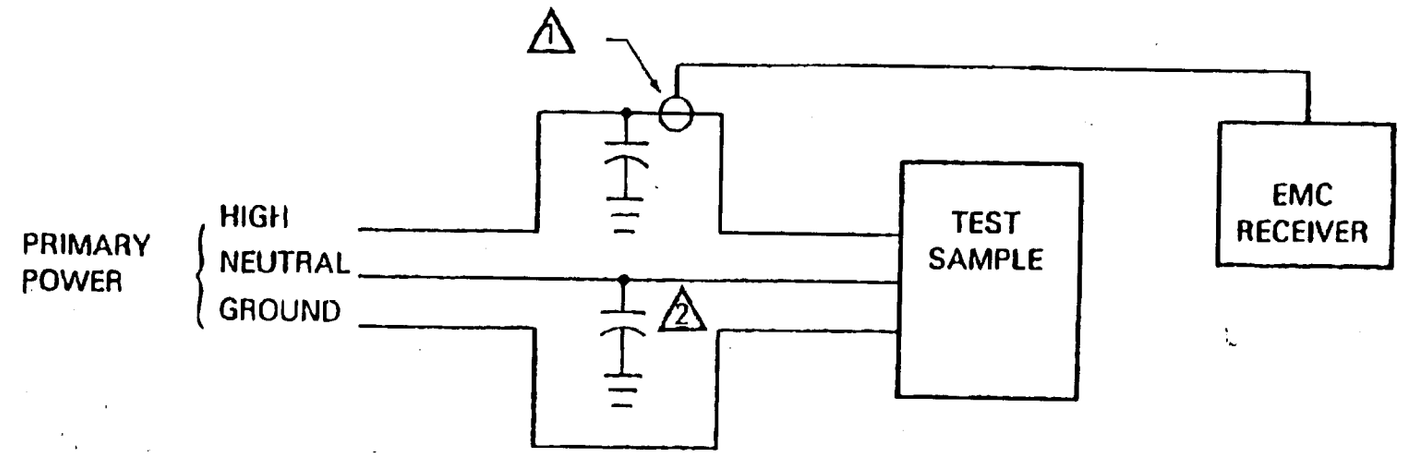

NOTES:

1 Current probe

2 10- μF capacitors

3 The chassis ground of the EMC receiver shall be directly connected to the ground plane on which the test sample is mounted.

4 The length of each power lead (from the test sample) between the point of separation and connection to the feedthrough capacitor shall be 30 ± 2 cm.

5 The test sample and the EMC instrumentation shall derive their power from two separate phases of the ac power source.

6 The EMC instrumentation shall be connected to the ac power source through an isolation transformer.

7 Isolate the current probe from the ground plane.

Figure 8. RADIATED EMISSION TEST CONFIGURATION

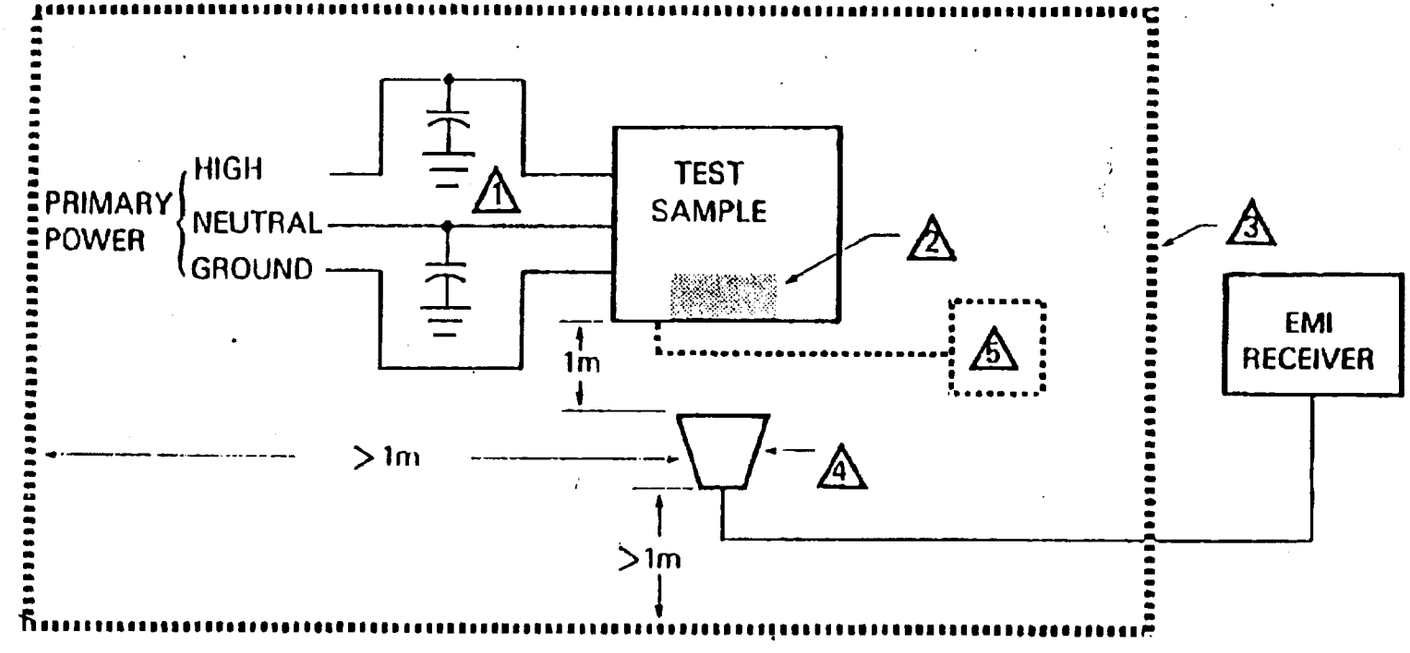

NOTES:

1. 10 μF capacitors
2. Area of maximum emission
3. Shielded enclosure
4. Test antenna
5. Signal cables and load (if applicable)
6. If the test sample is comprised of more than 1 unit and interconnecting cables are not supplied to the user, the interconnection cables for this test shall be at least 2 meters long. If interconnecting cables are supplied by the manufacturer to the user, then the supplied cables shall be used.

4.3 Susceptibility

4.3.1 Modulation

For devices which measure or monitor a physiological signal, the conducted and radiated susceptibility signals shall be modulated (30% modulation index) by a sine wave having a frequency within the physiological passband. The susceptibility signal frequency above which the modulation is to be used shall be 5 times the modulating signal frequency; below that frequency, the susceptibility signal shall be unmodulated. If the device has no physiological passband, the susceptibility signals shall be modulated (30% modulation index) by a 40-Hz sine wave at signal frequencies of 200 Hz and above.

4.3.2 Conducted Susceptibility

This test is used to insure that medical devices are not susceptible to electromagnetic energy injected on their power leads. The test is divided into two sections. The first section addresses the frequency range of 100 Hz to 50 kHz and the second section addresses the frequency range of 50 kHz to 30 MHz. The susceptibility signal shall be modulated in accordance with paragraph 4.3.1.

100 Hz to 50 kHz

a. Set up the test sample and test apparatus as shown in Figure 9.

b. Tune the oscillator through the specified frequency range and maintain the susceptibility test signal at or above the applicable levels shown in Figure 5. Monitor the test sample for evidence of malfunction. When degraded performance is induced, adjust the susceptibility signal level to the threshold of susceptibility or to the limit level of Figure 5, whichever is lower. The voltage and frequency of the susceptibility signal shall be recorded at each frequency at which the threshold of susceptibility is below the limit level.

c. If it is impossible to obtain the levels shown in Figure 5 using an audio amplifier having an output impedance of 2.4 Ω or less at 1000 Hz and capable of delivering 100 W power into a matched load at 1000 Hz, then adjust the amplitude of the susceptibility test signal to the maximum obtainable level and perform the test at that level. The test level must be documented.

50 kHz to 30 MHz

d. Set up the test sample and the test apparatus as shown in Figure 10.

Figure 9. CONDUCTED SUSCEPTIBILITY TEST CONFIGURATION (100 Hz to 50 kHz)

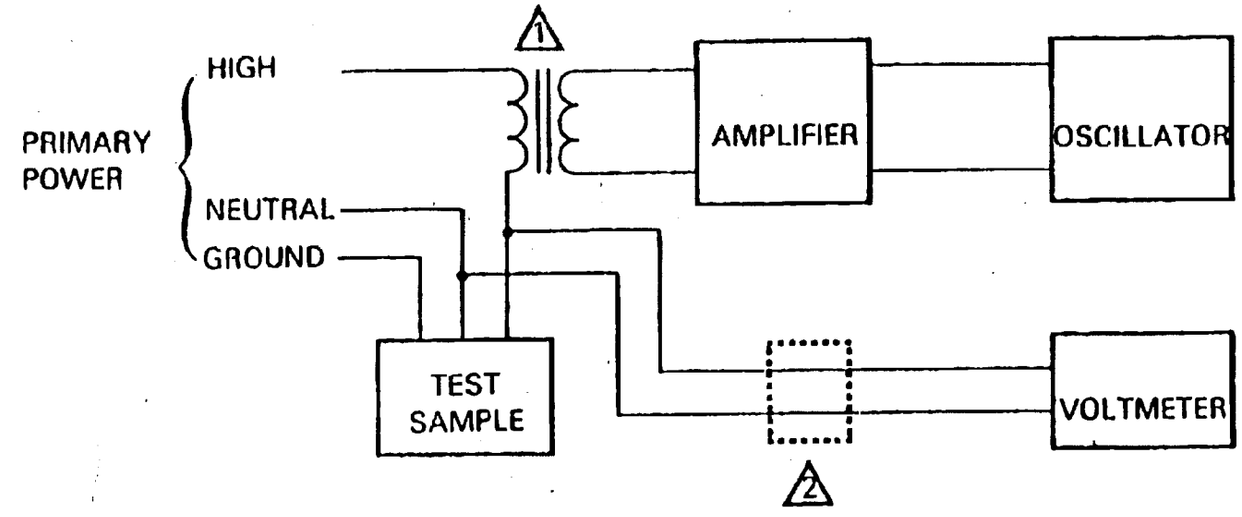

NOTES:

1. Isolation transformer
2. 60-Hz notch filter (optional)
3. The test sample and the EMC instrumentation shall derive their power from separate phases of the ac power source.
4. The EMC instrumentation shall be connected to the ac power source through an isolation transformer.
5. For the three-phase power, the susceptibility signal shall be supplied to each phase.

Figure 10. CONDUCTED SUSCEPTIBILITY TEST CONFIGURATION (50 kHz to 30 MHz)

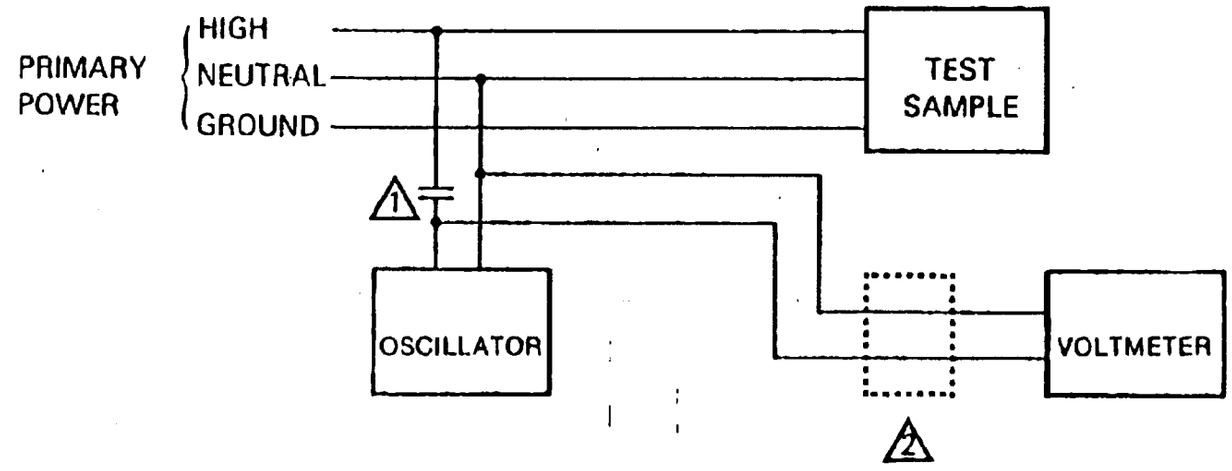

NOTES:

1. Coupling capacitor. The coupling capacitor may be changed during the test to maintain the required RF impedance of 5 ohms or less.

2. 60-Hz notch filter (optional)

3. The test sample and the EMC instrumentation shall derive their power from separate phases of the ac power source.

4. The EMC instrumentation shall be connected to the ac power source through an isolation transformer.

5. For three-phase power, the susceptibility signal shall be applied to each phase.

e. Tune the oscillator through the specified frequency range and maintain the susceptibility test signal at or above the applicable levels shown in Figure 5. Monitor the test sample for evidence of malfunction. When degraded performance is induced, adjust the susceptibility signal level to the threshold of susceptibility or to the limit level of Figure 5, whichever is lower. The voltage and frequency of the susceptibility signal shall be recorded at each frequency at which the threshold of susceptibility is below the limit level.

f. If it is impossible to obtain the levels shown in Figure 5 using a 50-Ω source capable of delivering 1 W into a matched load from 50 kHz to 30 MHz, then adjust the amplitude of the susceptibility signal to the maximum obtainable level and perform the test at that level. The test level must be documented.

4.3.3 Electric-field Susceptibility

This test is to insure that medical devices are not susceptible to radiated electric fields.

a. Arrange the test sample and test apparatus as shown in Figure 11. Position the surface of the test sample exhibiting the greatest susceptibility towards the field-generating antenna. Position the test sample cables in accordance with paragraph 4.1.3 and 4.1.4. Modulate the susceptibility test signal in accordance with paragraph 4.3.1.

b. Tune the signal generator through the specified frequency range. Maintain the susceptibility test signal, as measured by the field-monitoring antenna, at or above the applicable level shown in Figure 6. Monitor the test sample for evidence of malfunction. When degraded performance is induced, adjust the susceptibility signal level to the threshold of susceptibility or to the limit level of Figure 6, whichever is lower. The field-strength and frequency of the susceptibility signal shall be recorded at each frequency at which the threshold of susceptibility is below the limit level.

c. If a linearly polarized antenna is used, rotate the antenna 90° and repeat step b. This does not apply to monopole or dipole antennas below 200 MHz.

d. If any other surfaces of the test sample exhibit significant susceptibility, position those surfaces towards the test antenna and repeat steps b and c.

Figure 11. RADIATED E-FIELD SUSCEPTIBILITY TEST CONFIGURATION

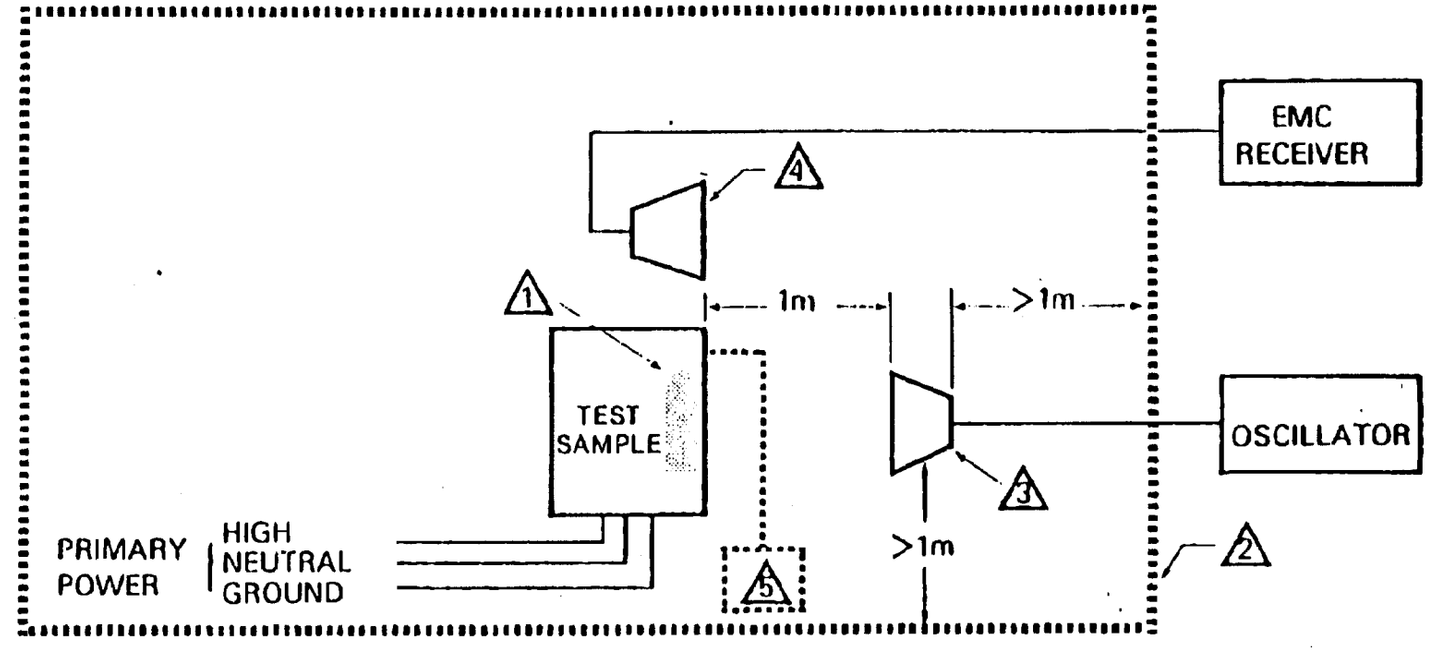

NOTES:

1. Area of greatest susceptibility
2. Shielded enclosure
3. Field generating antenna
4. Field monitoring antenna
5. Signal cables and load (if applicable)
6. If the test sample is comprised of more than 1 unit and the interconnecting cables are not supplied to the user, the interconnecting cables shall be at least 2 meters long. If interconnecting cables are supplied by the manufacturer to the user, then the supplied cables shall be used.

4.3.4 Magnetic-field Susceptibility

This test is to insure the medical devices are not susceptible to radiated magnetic fields.

a. Arrange the test sample and test apparatus as shown in Figure 12. The diameter of the Helmholtz coils must be larger than the maximum dimension of the test sample. Mount the test sample and any applicable test cables on a nonconductive surface at the center of the Helmholtz coils.

b. Adjust the variable transformer (Variac) to obtain a magnetic field of 1μT as measured by the loop antenna. Monitor the test sample for any evidence of malfunction.

c. If degraded performance is induced, adjust the susceptibility signal level to the threshold of susceptibility. Record the magnetic field strength.

d. Rotate the test sample 90° about an axis which is orthogonal to the axis of the Helmholtz coil. Repeat steps b and c.

4.3.5 Transient Susceptibility

This test is used to insure that medical devices are not susceptible to transients appearing on their power leads.

a. Connect the test sample and the test apparatus as shown in Figure 13.

b. Connect the 5-Ω calibration load to the transient generator (CAL position in Figure 13).

c. Adjust the output to obtain positive transients having the specified output waveform and amplitude. Adjust the repetition rate to within the range of 3 to 10 pps.

d. Note the setting of the amplitude control and reduce the output amplitude to a minimum.

e. Disconnect the calibration load and connect the transient generator to one phase of the test sample power leads (TEST position in Figure 13).

f. Slowly increase the transient generator output until (1) the specified transient amplitude is observed or (2) the transient generator setting of step d is reached.

g. Vary the repetition rate from 3 to 10 pps.

Figure 13. TRANSIENT SUSCEPTIBILITY TEST CONFIGURATION

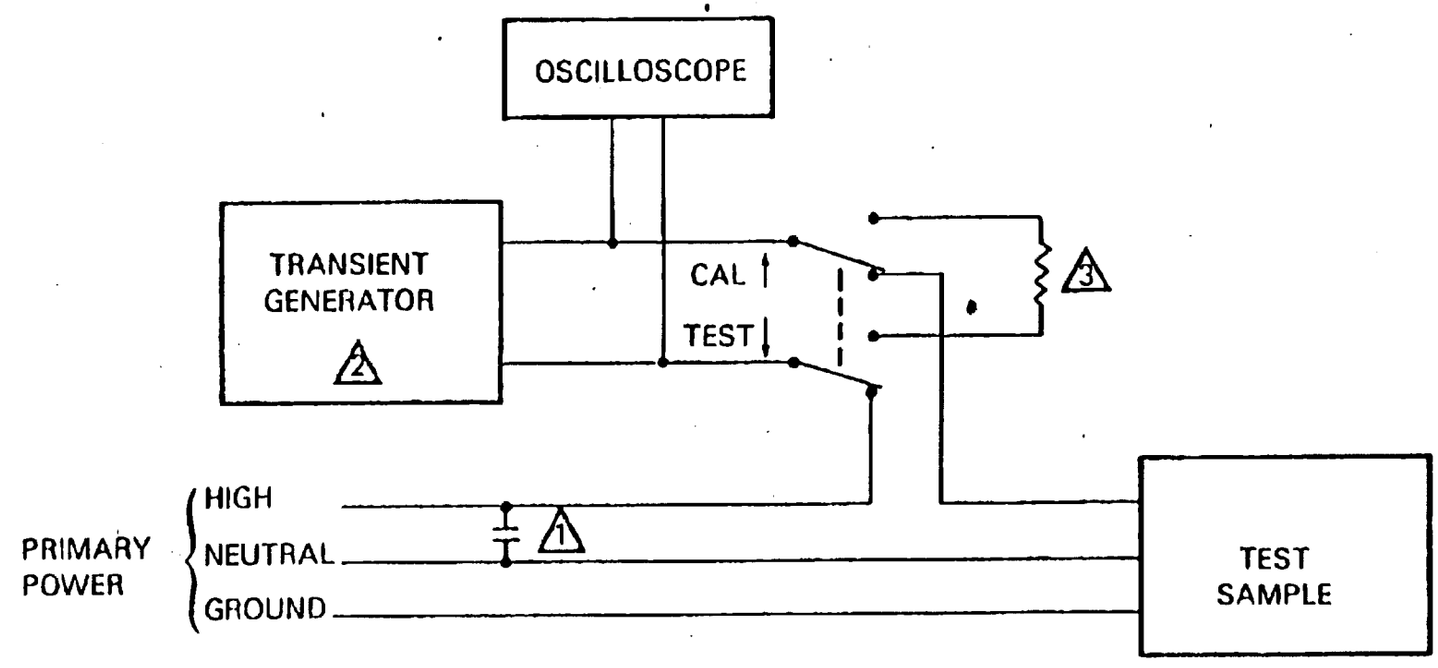

NOTES:

1. 10- μF Capacitor
2. Source impedance = 0.5 ± 0.1Ω resistive
3. Calibration load = 5.0 ± 1.0Ω resistive
4. The test sample and the EMC instrumentation shall derive their power from separate phases of the ac power source.
5. The EMC instrumentation shall be connected to the ac power source through an isolation transformer.
6. For three-phase power, the susceptibility signal shall be supplied in series with each phase.

Figure 12. RADIATED H-FIELD SUSCEPTIBILITY TEST CONFIGURATION

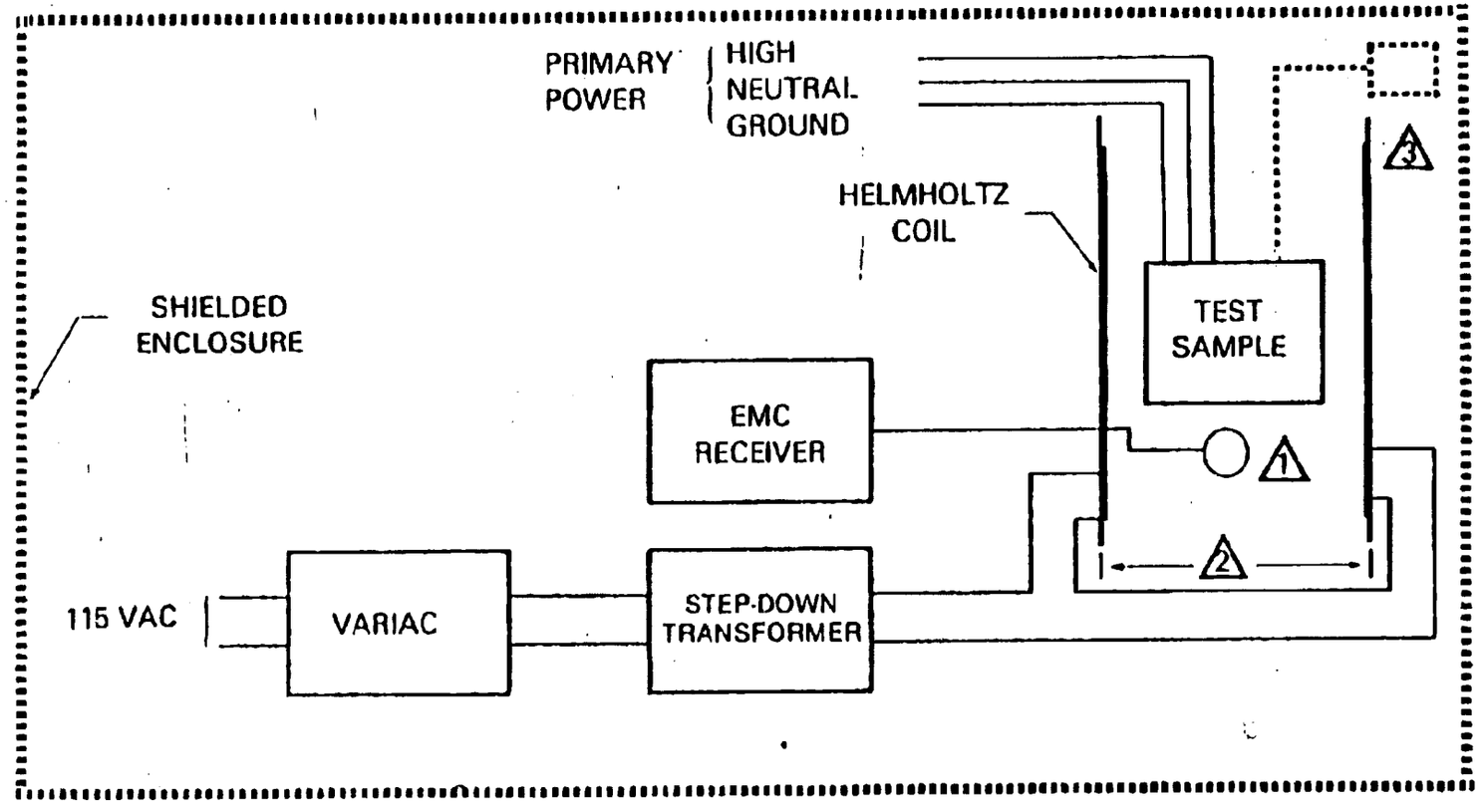

NOTES:

1. Loop Antenna
2. Coil separation is equal to the radius of the coils
3. Signal cables and load (if applicable)
4. If the test sample is comprised of more than 1 unit and the interconnecting cables are not supplied to the user, the interconnecting cables shall be at least 2 meters long. If interconnecting cables are supplied by the manufacturer to the user, then the supplied cables shall be used.

h. Synchronize the transient generator output to the powerline frequency and vary the phase positions slowly, dwelling on the positive and negative peaks and the zero-crossings of the powerline waveforms.

i. Repeat steps b through h using negative transients.

j. Repeat steps b through i, but with the transient generator connected to the neutral conductor in step e.

k. Throughout the test, monitor the test sample for evidence of malfunction.

SECTION 5 DEFINITIONS

5.1 Abbreviations

The following abbreviations are used in this document:

ac - Alternating Current
BB - Broadband
dB - Decibel
dc - Direct Current
EMC - Electromagnetic Compatibility
EMI - Electromagnetic Interference
FDA - Food and Drug Administration
ISM - Industrial, Scientific, and Medical
NB - Narrowband
pps - Pulses Per Second
rf - Radio Frequency
rms - Root Mean Square

5.2 Physical Quantities

The following symbols are used to indicate the applicable physical quantity:

Physical Quantity	Unit	Symbol
Length	meter	m
Electric current	ampere	A
Electric potential	volt	V
Electric field strength	volt/meter	V/m
Magnetic flux density	tesla	T
Frequency	hertz	Hz
Time	second	s
Electric resistance	ohm	Ω
Electric capacitance	farad	F
Electric power	watt	W

5.3 Multiplying Symbols

The following prefixes are used to indicate the applicable multiplier:

Symbol	Multiplier
G	giga (10^9)
M	mega (10^6)
k	kilo (10^3)
c	centi (10^{-2})
m	milli (10^{-3})
μ	micro (10^{-6})
n	nano (10^{-9})
p	pico (10^{-12})

5.4 Definitions and Terminology

The following definitions and terms are given for use in this standard. These definitions apply to the restricted field of electromagnetic interference only.

Ambient Level - Those levels of radiated and conducted signal and noise existing at a specified test location and time when the test sample is inoperative. Atmospherics, interference from other sources, and circuit noises or other interference generated within the measuring set comprise the "ambient level".

Broadband Emission - An emission that has a spectral energy distribution that is wide compared to the bandwidth of the measuring receiver in use.

Conducted Emission - Desired or undesired electromagnetic energy which is propagated along a conductor.

Electromagnetic Compatibility - Capability of equipment or systems to be operated in the intended operational electromagnetic environment at designed levels of efficiency without degradation due to electromagnetic interference.

Electromagnetic Interference - Any electromagnetic disturbance, phenomenon, signal or emission which causes or can cause undesired response of electrical or electronic equipment.

Emission - Electromagnetic energy propagated from a source by radiation or conduction.

Ground Plane - A metal sheet or plate used as a common reference point for circuit returns and electrical or signal potentials.

Impulse - An electromagnetic pulse of short duration relative to a cycle at the highest frequency being considered. Ideally, it is a pulse of infinite amplitude, infinitesimal duration, and finite area. Its spectral energy density is proportional to its volt-time area, and is uniformly and continuously distributed through the spectrum up to the highest frequency at which it may be considered an impulse. Regularly repeated impulses of uniform level will generate a uniform spectrum of discrete frequencies (Fourier components) separated in frequency by an amount equal to the repetition frequency.

Impulse Bandwidth - The impulse bandwidth of a receiver is the area divided by the height of the voltage response versus frequency selectivity curve at the circuit output.

Insignificant Malfunction - Any manifestation of inoperability or degradation of performance which does not adversely affect the safety of the device and does not diminish the effectiveness in its intended use.

Narrowband Emission - An emission which has its principal spectral energy lying well within the bandpass of the measuring receiver in use.

Physiological Passband - That portion of the frequency spectrum of a time-varying physiological event which is intentionally detected by a medical device for purposes of monitoring or diagnosis.

Power Leads - The wires which constitute the electric interface between the test sample and facility power or any other power source which is shared by other electrical apparatus.

Radiated Emission - Desired or undesired electromagnetic energy which is propagated into or across space, either as a transverse electromagnetic wave or by capacitive or inductive coupling.

Susceptibility - The reception of electromagnetic energy by an electrical or electronic device that results in undesirable responses by that device.

Susceptibility Degradation Criteria - A delineation of the essential safety and performance characteristics of a medical device and the allowed degradation of those characteristics during susceptibility testing.

Test Sample - The medical device utilized for EMC tests.

APPENDIX A

RATIONALE

FOREWORD

The technical basis for this standard was developed under FDA Contract 223-74-5246 (McDonnell Douglas Astronautics Company-East). The work performed under that contract is reported in ten quarterly progress reports and a final report.[1]

The requirements contained in the standard are based upon data taken during a hospital and emergency vehicle survey program, a review of the data gathered during previous hospital measurements, EMC tests on medical devices, established EMC test methods, and discussions in public review meetings. During the eight-month survey program, tests were performed in ten hospitals and two emergency vehicles. The type, size, and location of the hospitals at which data were measured are shown in Table A1. The results of several additional hospital EMC surveys have been published.[2,3,4,5,6] The results of these surveys were utilized to reinforce the data gathered during the contracted hospital survey and to fill any specific voids in the survey data. EMC tests were performed on selected medical devices as a means of determining the practicability of the requirements and test methods contained in the standard. The EMC test methods specified in this standard are based upon established test procedures. Whenever possible, the test methods developed for military EMC Standards have been selected. The established test methods were selected in an attempt to minimize the impact of this standard upon the medical device manufacturers and the EMC test community. Most EMC test facilities should be capable of performing the tests outlined in this standard without having to purchase or rent additional test equipment.

Drafts of this standard were mailed out to users, manufacturers, and individuals engaged in EMC testing and consulting for review. Written comments were solicited and received and public meetings were conducted to receive comments. The written and verbal comments were evaluated and incorporated into each succeeding draft.

The paragraph numbers in the rationale refer to paragraphs in the body of the standard.

TABLE A1 HOSPITALS PARTICIPATING IN MEASUREMENTS SURVEY

HOSPITAL	LOCATION	TYPE	BEDS
A	CITY	TEACHING	1115
B	CITY	CHILDRENS	190
C	CITY	GENERAL	505
D	SURBURBAN	GENERAL	336
E	SURBURBAN	GENERAL	605
F	CITY	TEACHING	319
G	CITY	GOVERNMENT	1149
H	SURBURBAN	GENERAL	300
I	RURAL	GENERAL	130
J	RURAL	GENERAL	98

A3.1 Labeling

Because conformance to this document is voluntary (except when referenced in a regulation), manufacturers may utilize or amend the requirements and test methods of this standard in any manner which is judged appropriate for the device. However, a claim by a manufacturer that a product conform to this standard is inherently deceptive unless certain specific additional information is supplied.

a. Unless stated otherwise, it shall be assumed that the device conforms to all of the requirements in Section 3 of this standard. If a manufacturer imposes only some of the requirements on his product, he must describe, in his instruction manual, which requirements are applicable and describe any deviations.

b. There are many variables in a test setup which are unique to the device and which may affect the test results. For example, a defibrillator may be far more susceptible with the paddle cables spread apart than with the cables tightly twisted together. If a defibrillator manufacturer feels that twisted cables are appropriate during a susceptibility test, it is essential that is be stated in the instruction manual.

c. For the purposes of this discussion, there are two types of malfunctions which may be manifested during susceptibility testing:

- performance characteristics which do not meet the manufacturer's specified tolerances (e.g. - accuracy of ECG chart speed)

- performance characteristics which do not meet implied levels of performance (e.g. - speed of raising or lowering of an electrically operated patient bed)

In the first example, it is expected that an ECG manufacturer will disclose the chart speed accuracy which the ECG will meet during susceptibility testing if it doesn't meet the normal accuracy specification.

In the second example, complete inoperability of the bed or an intermittant jerking motion is obviously a failure to meet implied levels of performance. However, if the jerking is not severe, it is conceivable that the manufacturer may consider the malfunction to be insignificant. In such situations, the manufactuer would be expected to disclose the existence of the malfunction and the conditions under which it occurs and to state that the malfunction is considered insignificant. The requirement to describe these insignificant malfunctions is imposed so that the potential device user may evaluate the impact of these malfunctions upon his particular circumstances.

A3.2 Emissions

A3.2.1 General

The primary purpose of this standard is to establish a reasonable level of assurance that medical devices will operate safely and effectively in the electromagnetic environments expected in use. However, hardening medical devices against EMI is a losing strategy unless some attempt is made to limit the steadily growing ambient. Therefore, emission limits were established, the desired effect being to halt the growing ambient at present levels. Since this standard is explicity intended for medical devices, it is obvious that many of the major contributors to the electromagnetic environment will remain uncontrolled. However, it is hoped that this standard will serve notice to users that electromagnetic compatibility should be considered when purchasing nonmedical equipment. Any such equipment which emits electromagnetic energy at levels in excess of the limits presented in this standard is a potential source of interference for medical devices, even if those medical devices conform to the susceptibility requirements of this standard.

A3.2.2 Conducted Emissions

Conducted emissions measurements were made in 66 locations during the hospital survey. The measurements were taken in those areas containing the largest numbers of electrical and electronic apparatus. Emission levels were recorded at approximately 800 discrete frequencies over the range of 500 Hz to 30 MHz. In the data analysis, the above frequency range was divided into 44 bands having an average of 18 discrete measurements in each band. For each of the 66 locations, the maximum measured emission (both broadband and narrowband) for each of the 44 bands was identified. An example of this technique is shown in Table A2. Conducted broadband emissions in the 9 kHz to 10 kHz band were measured in 62 of the 66 locations. Table A2 lists the maximum measured broadband emission in the 9 kHz to 10 kHz band for each of the 62 locations. The average of these 62 values is 124 dB above 1 μA/MHz. This operation was repeated for each of the 43 remaining frequency bands and the results were plotted as shown in Figure A1. The broadband emission limits were based upon this curve of average maximum emission measurements.

TABLE A2 CONDUCTED BROADBAND EMISSIONS 9 kHz to 10 kHz

LOCATION	EMISSION (dB above 1 μA/MHz)	LOCATION	EMISSION (dB above 1 μA/MHz)
1	100	32	123
2	105	33	120
3	125	34	130
4	120	35	116
5	118	36	131
6	124	37	128
7	102	38	121
8	116	39	129
9	126	40	101
10	126	41	124
11	127	42	128
12	130	43	114
13	122	44	125
14	121	45	139
15	118	46	119
16	105	47	116
17	115	48	118
18	129	49	127
19	134	50	124
20	135	51	110
21	126	52	120
22	117	53	127
23	123	54	133
24	126	55	120
25	123	56	127
26	116	57	102
27	125	58	108
28	125	59	124
29	113	60	116
30	115	61	102
31	125	62	118

Figure A1. COMPOSITE CONDUCTED BROADBAND EMISSION LEVELS

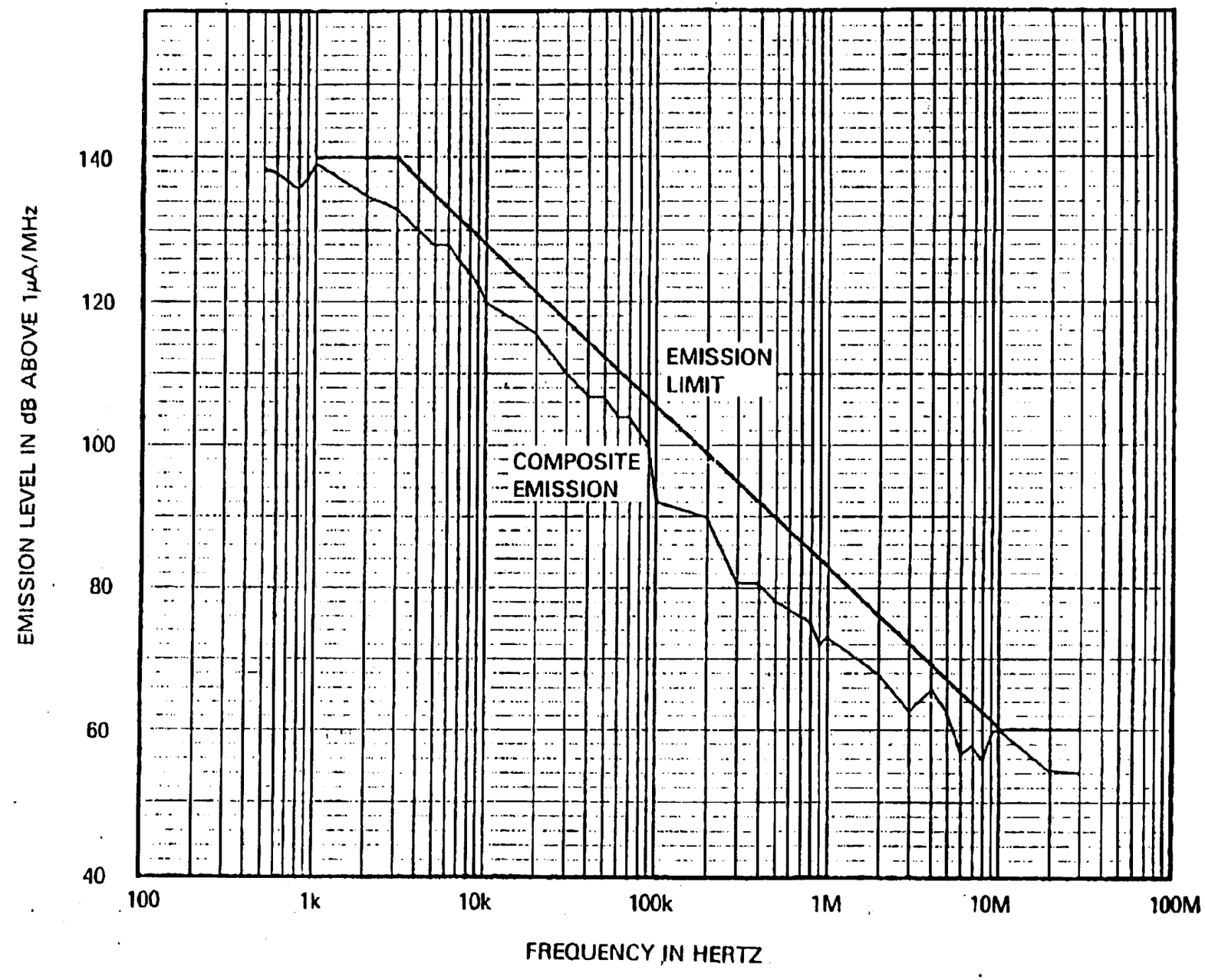

In establishing a frequency range of 500 Hz to 30 MHz for narrowband conducted emissions, the likely sources were considered. Up to several hundred hertz, the harmonics of the 60-Hz line frequency may be considered narrowband. In a dc power supply, these harmonics are generated by the cyclic conduction and nonconduction of the rectifier diodes. The magnitudes of the first few harmonics are determined primarily by the resistive component of the load (i.e. - the power requirements of the device) and are difficult to control. The magnitudes of higher frequency harmonics are determined by the capacitive loading of the rectifier, which is more easily controlled.

Internal oscillators are another source of narrowband conducted emissions. Generally, the lowest frequency at which oscillators operate efficiently is several kilohertz. By placing the lower frequency limit for testing at 500 Hz, the 60-Hz harmonics which are difficult to control are avoided, and yet it encompasses the higher frequency harmonics and all likely oscillator frequencies.

The most common high-frequency oscillator that produces significant emissions is the one operating at 27 MHz, associated with diathermy devices. By extending the upper frequency of the conducted emission limit to 30 MHz, the limits are applicable to this type of source. To limit the conducted emission from a 27-MHz diathermy device, a low-pass filter would normally be employed. A properly designed low-pass filter would limit the emissions at 27 MHz and at the harmonics of 27 MHz. An improperly designed or improperly installed filter may have inadequate insertion loss at higher frequencies but the deficiency should be revealed in radiated emissions tests.

Since transient signals associated with device turn-on and turn-off are impulse type signals (as opposed to continuous signals) the broadband limits are applicable. A 20-dB relaxation of the broadband limits is justified because, even with the relaxation, a margin exists between the transient susceptibility level and the relaxed broadband emission limit. The transient susceptibility signal is roughly equivalent to a broadband signal of 190 dB μA/MHz up to about 60 kHz, above which, the spectrum rolls off at 20-40 dB/decade. As a result, the margin between the emission limits and transient susceptibility limit varies from 20 dB to 50 dB.

The conducted emission limit is expressed in units of current rather than voltage in order to extend the emission limit to frequencies as low as 500 Hz. For conducted emission measurements of voltages, Line Impedance Stablization Networks (LISN) are required. The lowest frequency for which these LISNs are reliable is 14 kHz[7]. Therefore, voltage emission measurements cannot be made across the entire frequency range of interest.

Three techniques were considered for establishing the maximum emission level. The first was to base the specification level upon the mean measured emission level, and the third was to use the average of the maximum measured emission levels. If the specification emission levels were based upon average measured emission levels, many of the devices currently on the market would fail to pass the emission criteria. To exclude so many of the devices because the allowable emission levels were based upon average measured emissions would be an unreasonable impact on the cost of medical devices. On the other hand, to allow all devices to generate emissions to a specification level based upon the maximum measured emissions would have increased the electromagnetic level in medical facilities and dashed all hopes of lowering those electromagnetic levels and subsequently lowering the equipment susceptibility levels.

Basing the allowable emission levels upon the average of the maximum measured emissions is a compromise between the two preceeding techniques. Most devices will be able to comply with the emission requirements, yet those high emission devices must lower their emissions. The emission level limit may eventually result in lower ambient levels within the medical facilities and a gradual easing of the susceptibility requirements.

The range of the broadband emission limit is 1 kHz to 30 MHz. The hospital survey program and the laboratory tests on several medical devices verified that, below 1 kHz, the conducted emissions from medical devices are dominantly narrowband harmonics of the power frequency. The upper frequency limit at 30 MHz includes the most common ISM frequencies.

Narrowband emissions were analyzed in a manner similar to that used for the broadband emissions. Once the narrowband emission limits were determined, a rough comparison was made between these emission limits and the conducted susceptibility limit. This comparison showed a significant gap between the interference generated by a few high emission medical devices and the effects of nonmedical device emitters. Since the susceptibility signal level could not be lowered (this level represents the actual level on the power line), it was decided to relax the emission somewhat to enable more devices to pass the emission limit without modifications.

A3.2.3 Radiated Emissions

Radiated emissions measurements were conducted in 74 locations during the hospital survey. These measurements covered the frequency range of 10 kHz to 1 GHz. In the data analysis, the frequency range was divided into 46 smaller frequency bands. For each of the 74 locations, the maximum measured emission (both broadband and narrowband) for each of the 46 smaller frequency bands was identified. An example of this operation is shown in Table A3. This table shows the maximum measured broadband radiated emission in the 90 kHz to 100 kHz frequency band for 67 of the 74 locations. The average of these 67 values is 119 dB above 1 μV/m/MHz. This operation was repeated for each of the remaining 45 frequency bands and the results were plotted as shown in Figure A2. The broadband radiated emission limits were based upon this curve of average maximum emission measurements.

Narrowband emissions limits were analyzed in a manner similar to that used for the broadband emissions. A listing of the licensed emitters in the greater St. Louis areas was obtained from the Electromagnetic Compatibility Analysis Center (ECAC). The known high-power emitters such as radio and TV transmitters were removed from the data prior to the calculations of narrowband emissions limits.

The frequency range for the radiated emission limits is 10 kHz to 1 GHz. The lower frequency limit was set at 10 kHz because it was noted, during both the hospital tests and the medical device tests, that the measured emissions often decreased to levels below the receiver internal noise at frequencies of 50 kHz and below. This is consistent with the lower frequency cutoff point of 14 kHz used in military and aerospace EMC standards.[3,9]

The upper cutoff frequency of 1 GHz is high enough to include emissions from device oscillators and digital data clocks and the ISM frequencies through 915 MHz[10]. ISM frequencies are also allocated at 2.45 GHz, 5.8 GHz, and 24.125 GHz. The device emissions at these three frequencies above 1 GHz can be covered in specific device performance standards, if necessary.

A3.3 Susceptibility

A3.3.1 General

To insure that medical devices perform satisfactorily in their intended environment, it is necessary to establish device susceptibility limits. These susceptibility signal limits reflect the maximum electromagnetic interference

TABLE A3 RADIATED BROADBAND EMISSIONS 90 kHz to 100 kHz

LOCATION	EMISSION (dB above 1 μV/m/MHz)	LOCATION	EMISSION (dB above 1 μV/m/MHz)
1	117	35	108
2	118	36	115
3	125	37	142
4	107	38	105
5	112	39	107
6	115	40	106
7	116	41	101
8	116	42	96
9	104	43	128
10	109	44	128
11	106	45	110
12	90	46	120
13	116	47	130
14	108	48	114
15	103	49	107
16	120	50	108
17	112	51	130
18	112	52	124
19	108	53	116
20	109	54	114
21	92	55	110
22	108	56	118
23	107	57	120
24	136	58	98
25	104	59	118
26	130	60	112
27	114	61	110
28	94	62	112
29	134	63	99
30	105	64	100
31	110	65	104
32	100	66	108
33	110	67	117
34	112		

Figure A2. COMPOSITE RADIATED BROADBAND EMISSION LEVELS

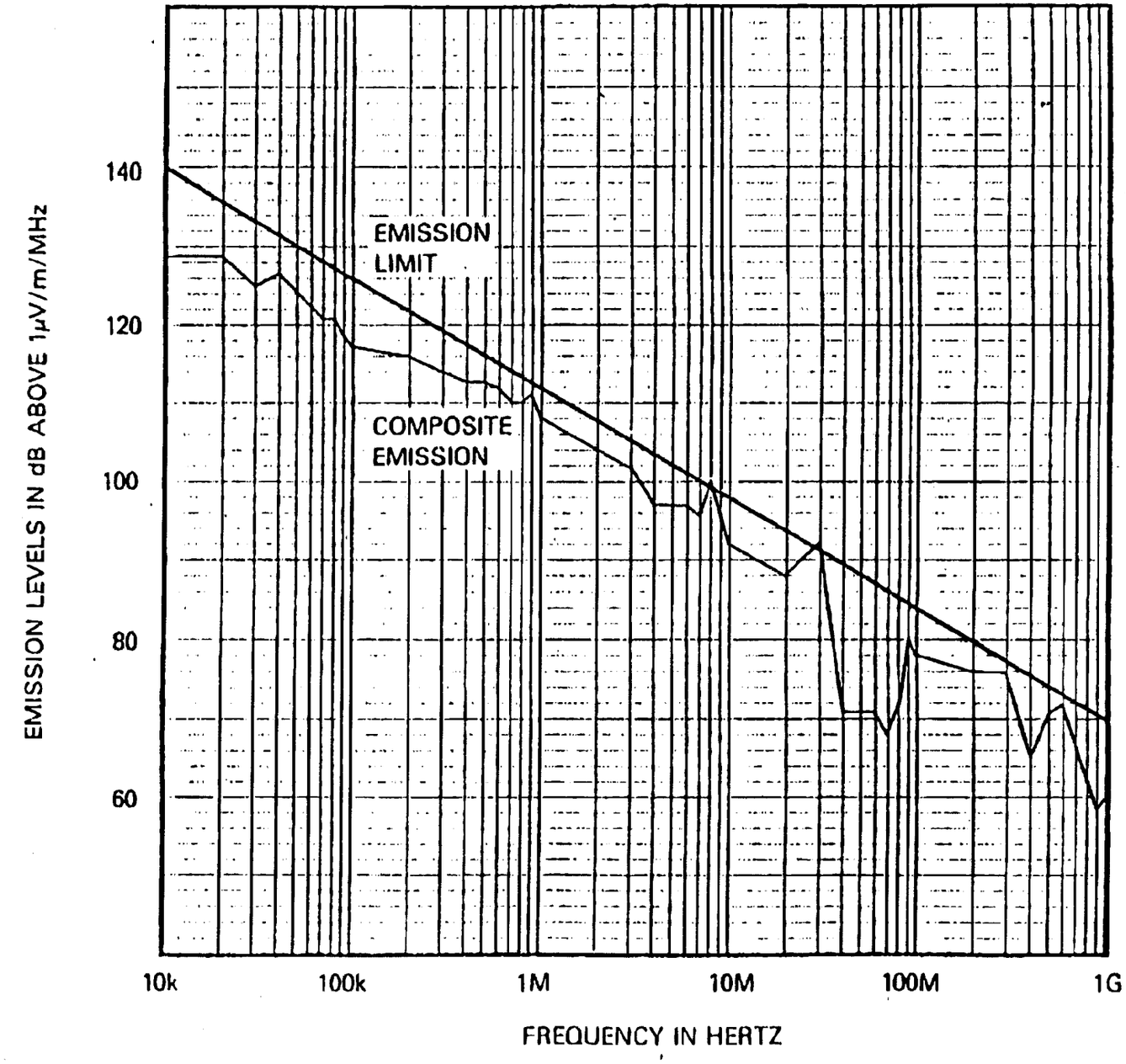

signal levels that would be found in 99% of all medical facilities. The detailed discussion on how these limits were established is presented in the rationale for paragraphs 3.3.2, 3.3.3, 3.3.4 and 3.3.5.

Degradation Criteria - One of the most troublesome problems encountered in the development of this standard concerned degradation criteria or pass/fail criteria during susceptibility testing. Without a specific device and application in mind, it is not possible to generalize as to what kinds of performance degradation should be considered unacceptable. For example, if a patient monitoring console incorporates a digital clock (time-of-day) for the convenience of the nurses, it might be unfair to say that the patient monitor has failed the susceptibility requirements if the clock malfunctions. On the other hand, if that clock is depended upon to automatically transmit patient status at regular intervals, one might say that a malfunctioning clock is reason for failing the patient monitor.

During the public reviews of early drafts, comments were made to the effect that this standard should specify degradation criteria for every medical device on the market. This suggestion is clearly not within the scope of a baseline standard. Therefore, it was decided to adopt a labeling approach which allows manufacturers to determine those malfunctions they deem insignificant and requires manufacturers to list those insignificant malfunctions in their device literature, thereby allowing users to judge the insignificance (or significance) of those malfunctions in the users' particular applications.

Within the meaning of "insignificant malfunction" are included those primary device characteristics, the performance of which may degrade beyond the manufacturer's specification but not to the extent that it represents a hazard. For example, if the manufacturer's normal specification for noise on an electrocardiograph is 50 µV, the manufacturer may feel that 100 µV noise is an acceptable degradation of performance when exposed to susceptibility testing. Therefore, that manufacturer would be required by this standard to state in the labeling that the noise specification is degraded to 100 µV under susceptibility conditions and that this is considered an insignificant malfunction. If this labeling approach is found to be inadequate for specific devices, detailed susceptibility degradation criteria may be included in the individual medical device performance standards.

In early drafts of this standard, a distinction was made between critical and noncritical parameters. Critical parameters of a device were those that could result in immediate jeopardy to the patient. When performing susceptibility tests, the test levels were significantly higher for critical parameters. This distinction was eliminated for seveal reasons. First, the critical/noncritical distinction was being confused with insignificant malfunctions, even after several lengthy discussions at two public review meetings. Second, it was difficult to identify device parameters that were, and always would be, noncritical independent of application. With the advent of computer-aided diagnosis, many parameters that ordinarily could be considered noncritical (such as patient temperature) assume a more significant role. Third, since the susceptibility levels for noncritical parameters reflected the environment in 99% of all medical facilities, the higher susceptibility levels for critical parameters reflected levels that would be found in less than 1% of medical facilities.

Modulation

Most electronic devices are more susceptible to modulated interference signals than to unmodulated signals. The most susceptible case exists when the modulating signal is similar to a signal generated within the electronic device or to a signal the device is designed to monitor. To ensure that medical devices do not experience EMI problems, the susceptibility signal must be modulated by a sine wave within the physiological passband of the device or, for those devices that do not have a physiological passband, a 40-Hz sine wave.

In early drafts of the standard, the susceptibility signal was modulated by a "critical signal" where a "critical signal" was defined as the signal to which a device was most susceptible. This was an open-ended requirement and, theoretically, a manufacturer would have had to test at a multitude of modulation frequencies to determine the most susceptible frequency. By limiting the range of the modulating signal to a frequency within the physiological passband of the device, a limitation is placed upon the modulation signal frequency.

The modulation requirements contained in early drafts addressed the susceptibility problems peculiar to digital devices. Interference signals having characteristics similar to the clock signal can cause false data transfer within the device or from one device to another. Since greater reliance is being placed upon computer-controlled data gathering and diagnosis, it was felt necessary to ensure that the components in these systems were immune to EMI. Therefore, the modulation

requirements included square-wave modulation at a prf equal to the clock frequency of the test sample. This approach ran into difficulty because of the unavailability of oscillators and modulators below 1 GHz which could be square-wave, or even pulse-modulated at high prf. The omission of square-wave modulation is somewhat justified by the infrequent occurrance of pulse-modulated signals in the electromagnetic environment below 1 GHz. Manufacturers or users of devices which are used near radar transmitters (> 1 GHz) may derive some benefit from radiated susceptibility tests utilizing pulse-modulation above 500 MHz.

Magnetic-field susceptibility signals need not be amplitude-modulated. Within medical facilities, the magnetic-field interference is generated by high current flowing through the 60-Hz power lines. It is not likely that the ac power in the hospitals will be amplitude modulated by a coherent signal.

A3.3.2 Conducted Susceptibility

The conducted susceptibility signal levels were calculated from measured narrowband emission currents to a known load. The load employed was a 150-W incandescant lamp, the impedance of which had been measured (see Figure A3).

The data analysis was similar to that used for establishing the maximum emission levels. The 500-Hz to 30-MHz frequency range was divided into 44 bands and, for each band, the maximum emission level was identified. This operation was repeated for each location in which conducted emission measurements were made.

The measured emission levels were statistically treated to represent the maximum emission levels that would be found in 99% of all medical facilities. The calculated emission levels for each of the 44 frequency bands were plotted as shown in Figure A4. The conducted susceptibility levels were based upon this curve. These test levels are intended to provide a 99% confidence that any qualified medical device will operate satisfactorily in any arbitrary environment in any medical facility.

Although the conducted emission limits are expressed in units of current (dB above 1 uA) and the conducted susceptibility limits are expressed in terms of voltage (volts RMS), a rough correlation between the two is possible. The ac line impedance varies from location to location and also varies as a function of frequency. For this discussion let us assume the symmetrical line impedance is 5 Ω at 20 kHz[11]. If a device produced the maximum allowable emission of 97 dB above 1 uA at 20 kHz into the 5 Ω load, this will result in a voltage of 0.35 V peak. At 20 kHz, the susceptibility signal level is 1.5 Vrms (2.1 V peak); thus a margin of 6 to 1 exists between the maximum emission and minimum susceptibility signal levels.

Figure A3. IMPEDANCE OF 150-W LAMP

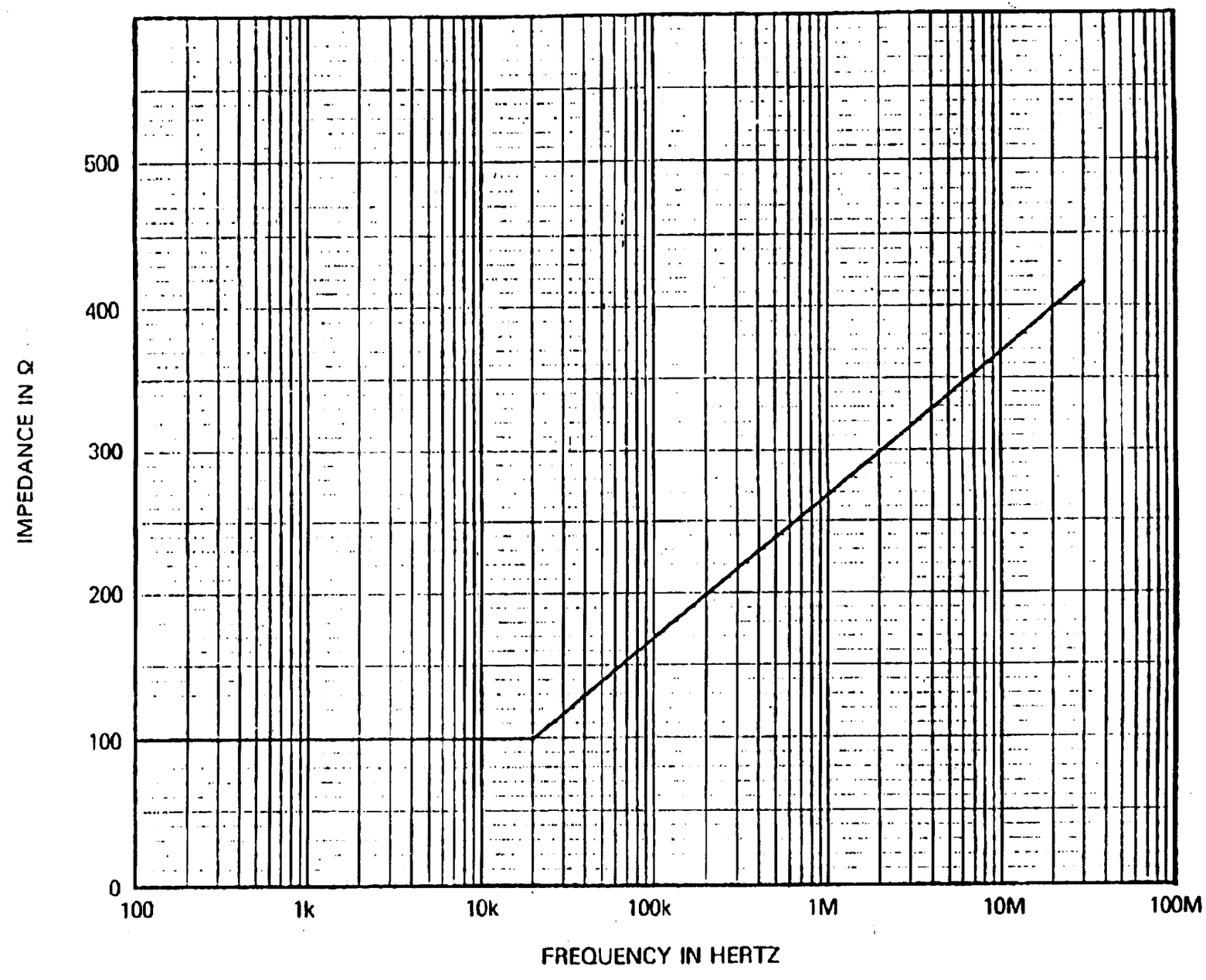

Figure A4. COMPOSITE CALCULATED EMISSION LEVEL

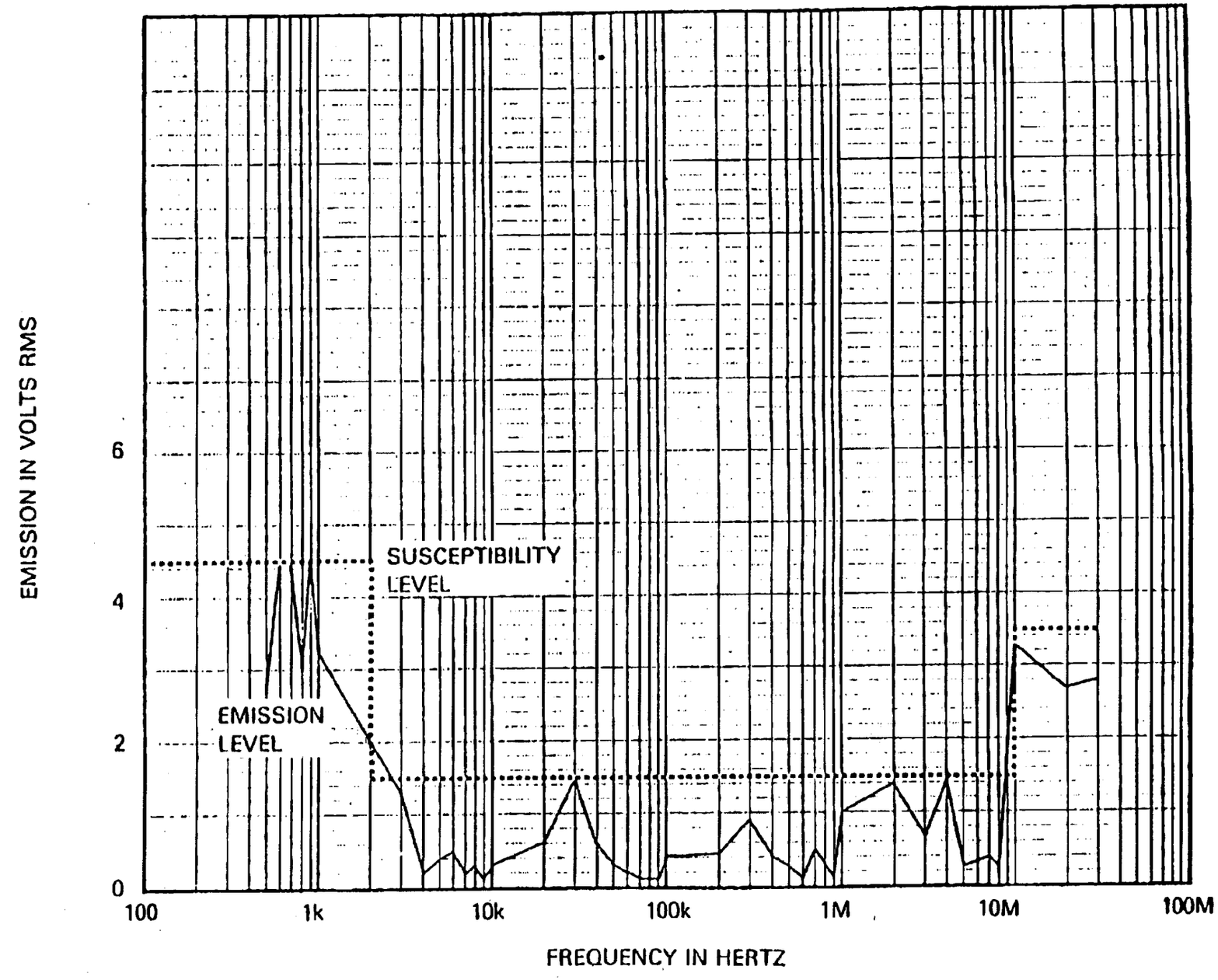

A3.3.3 Electric-field Susceptibility

The radiated electric-field susceptibility signal levels were based upon two sets of data: measured narrowband ambient levels and calculated radio and television field strengths. The analysis of the measured data was similar to that used to establish the maximum emission levels. The 10-kHz to 1-GHz frequency range was divided into 46 smaller frequency bands and, for each of these 46 frequency bands, the maximum emission level was identified. This process was repeated for each location in which radiated narrowband ambient signals were measured. To fulfill this requirement, the measured emissions were treated as a sample from a population, the mean and standard deviation were calculated, and, using statistical tables, those emission levels that represent the maximum levels in 99% of all medical facilities were calculated. These calculated ambient levels are shown in Figure A5.

The effects of emissions from electrosurgical units (ESU) are not well represented in these data. ESUs typically are operated intermittently and, consequently, the appearance of ESU emissions in the raw data is sporadic. When measured, it has been found that electric field emissions from ESUs are well above the ambient, as any operating room staff will attest.

Consideration was given to increasing the electric-field susceptibility limits to ensure that any medical device will function properly in proximity to an ESU. However, the idea was dropped for the following reasons:

1. Electric-field emissions from an ESU, measured at a distance of 16 cm, approach 1000 V/m[12]. Designing a medical device to operate in a field that strong would be extremely difficult and expensive. In comparison, it requires rather sophisticated EMI design for military electronics to withstand military requirements for test levels of 20-200 V/m.

2. The interference from an ESU is intermittent and is under the control of the surgeon. Generally, surgeons and anesthesiologists are unupset by the temporary loss of blood pressure monitors and electrocardiographic monitors. While there have been reports of surgeons operating an ESU continuously (i.e, even while not cutting or coagulating), this is considered poor practice and is a user problem.

In addition to measured ambient field strengths, Figure A5 shows calculated radio and TV field strengths. Calculated field strengths, rather than measured field strengths, were utilized because enough technical data are available to make

Figure A5. COMPOSITE RADIATED ELECTRIC FIELD LEVEL

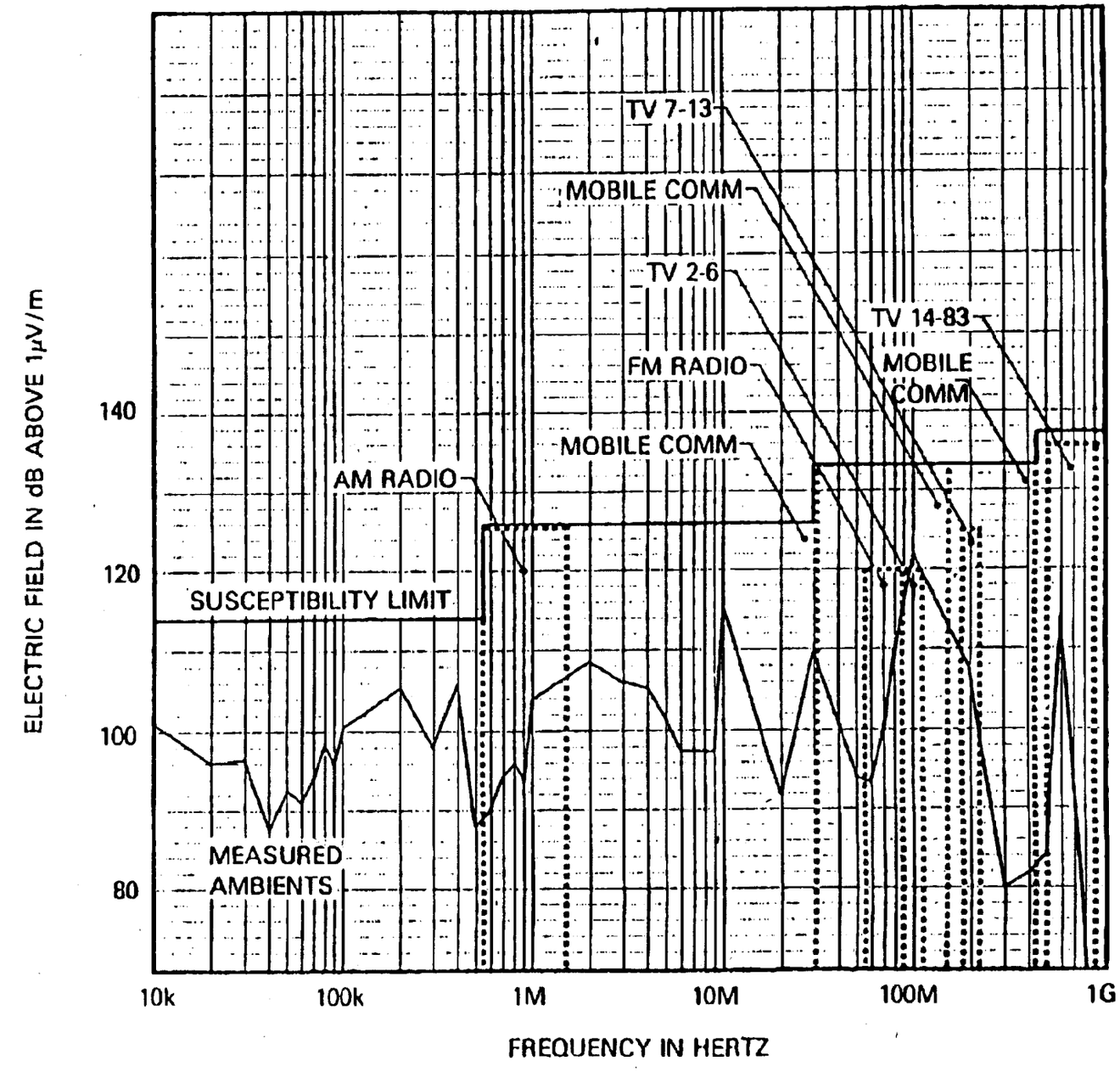

calculations easier and more reliable than measurements. Early drafts of this standard included limits which were based on measured radio and TV levels found in the literature. However, of the 6000-plus hospitals in the United States, measured levels were documented for only five. As a result of public reviews of the early drafts of the standard it was concluded that the closest of the transmitters (450 meters) represented an unreasonably small probability and the measured data should not be extrapolated to be applicable to all hospitals. Therefore, an alternate approach was adopted, in which the limits are based on calculated field strengths which would result from radio and TV transmitters located 1500 meters from the hospital and transmitting the maximum power allowed by the Federal Communications Commission:[13]

AM Radio	50kW
FM Radio and TV channels 2 through 6	100kW
TV channels 7 through 13	300kW
UHF TV	5000kW

This approach serves two purposes. It facilitates the setting of limits because it avoids the problem of the shortage of measured data. It also quantifies the risk of medical device interference in terms which are more meaningful to hospital staffs; i.e.-distance instead of field strength. Hospital staffs can now look upon the 1500-m distance as a benchmark. Devices complying with this standard probably will not be susceptible to radio and TV transmitters located more than 1500 m away. Hospitals located nearer than 1500 m to a radio or TV transmitter should not place total reliance on this standard; such hospitals should investigate the potential for interference and perform their own analyses. Most broadcasters are not licensed to operate at the power limits mentioned previously, but if a hospital is located within 1500 m of one that is, there will probably be occurrances of interference to medical devices.

The calculated levels shown in Figure A5 are based on the following: For AM radio stations, the level shown is for an effective radiated power (ERP) of 50 kW and a ground conductivity of 20 millisiemans/meter. For FM radio and TV channels 2 through 6, the effects at 1500 m where calculated for an ERP of 100 kW and an antenna height of 600 m. For TV channels 7 through 13, the ERP was 200 kW and antenna height was 600 m. For UHF TV, the ERP was 5000 kW and antenna height was 600 m.

Since the time when the 1500-m distance was incorporated into the standard, the Environmental Protection Agency has completed a study which indicates that[14]:

- 19% of all hospitals are within one mile (approximately 1500 m) of an AM radio transmitter.

- 20% of all hospitals are within one mile of an FM radio transmitter.

- 2.7% of all hospitals are within one mile of a TV transmitter.

EPA reported that there are six hospitals located within one mile of a 50-kW AM transmitter. Theoretically, these hospitals should experience field strengths exceeding the radiated susceptibility limits of this standard.

Figure A5 also shows the effects of mobile communications at the three most common frequency ranges: 20 MHz, 150 MHz and 450 MHz. These levels are based upon transmitted power of 500 W at a distance of 30 m. The band from 450 MHz to 470 MHz is the most commonly used band for emergency medical services (EMS) communications. Calculations of field strengths within an emergency vehicle, resulting from a 15-W transmitter on the same vehicle, are somewhat complex. However, approximate solutions result in field strengths of 126 dB μV/m to 140 dB μV/m.

Having plotted the measured ambient levels and the calculated radio and TV levels, a susceptibility limit was constructed.

The upper frequency for the radiated susceptibility limit is 1 GHz. It must be acknowledged that certain frequencies above 1 GHz have been allocated to ISM functions and that radars operating at frequencies above 1 GHz might illuminate medical facilities. However, experience has shown that an electronic device (except for a RF receiver), immune to a given electromagnetic environmental level at 1 GHz, will also be immune to that electromagnetic environmental level at 2, 3 or 4 GHz.

In 1977, the Government of Canada issued an advisory bulletin which defines the maximum expected radio environment in populated areas and it establishes three environmental immunity grades for electronic equipment operating in that environment.[15] The defined environment and the limit curves for immunity grades 1, 2, and 3 are generally supportive of the limit curve in this standard. The greatest discrepancy lies in the range of 1.7 MHz to 30 MHz, where the Canadian maximum expected RF environment exceeds the susceptibility limit of this standard by 13 dB.

A3.3.4 Magnetic-field Susceptibility

Magnetic field measurements were made in 22 locations. In all instances the frequency of the magnetic field was a harmonic of the power frequency. The level of the magnetic field depended upon the proximity of the antenna to high-power-consumption devices. The highest magnetic fields were measured in an area that contained a nuclear accelerator. In an early draft of the standard, the magnetic-field susceptibility levels were based upon the levels measured in high-power areas such as nuclear medicine areas. However, it was concluded that most medical devices would not be used in areas where the highest magnetic levels were measured. Therefore, the magnetic susceptibility levels contained in this standard reflect those emission measurements made only in hospital locations other than nuclear medicine.

A3.3.5 Transient Susceptibility

Transients on the ac power lines were monitored with a peak-reading memory voltmeter having a rise time of less than 50 ns. The amplitude of the transient susceptibility test signal is based upon the memory voltmeter readings. The characteristics of the transient susceptibility test signal are similar to those specified in military requirements and transient generators that produce this waveform are commercially available. The additional limitations on the transient generator represent a slight departure from MIL-STD-461A/462, from which this test was adopted. Manufacturers who installed powerline filters having significant shunt capacitance were penalized by MIL-STD-461A/462, in that the procedure called for the test operator to increase the transient energy without limit until the specified peak voltage was attained. Obviously, the more shunt capacitance presented by the test sample, the more transient energy required to attain the specified voltage. To alleviate this problem, this standard specifies a transient amplitude when generated from a specified source impedance, into a specified load. The respective impedances reflect values proposed for MIL-STD-461B/462B.

A4. Test Methods

The test methods contained in the standard are the usual methods employed in military EMI tests[7]. Conducted emission measurements are performed with a current probe; conducted susceptibility tests utilize current injection techniques; radiated emission and susceptibility tests are performed in a shielded room. Although the use of current probes is consistent with military practice, it is not consistent with CISPR (Comite International Special des Pertubations Radioelectriques) methods. CISPR has been calling for the use of Line Impedance Stabilization Networks (LISNs) which yield voltage measurements rather than current. However, LISNs are limited in frequency to the range above 14 kHz. In addition, CISPR is investigating the possibility of making cable radiation measurements utilizing

absorbing clamps in lieu of normal radiated emissions measurements for small devices. But the only one developed and in use has a range of 30 MHz to 300 MHz.

The use of a shielded enclosure caused some controversy during the development of the standard. A few individuals and manufacturers expressed concern about the standing-wave problems with shielded room measurements. Because of standing waves, field strength excursions of up to 100 dB occur as frequency is changed slightly. This would be significant if one attempted to duplicate an emission measurement at a specific frequency. However, because of the nature of the test methods in Section 4.2, plotted data have little variability when repeated. For example, emission peaks measured at 75, 99, 105, and 141 MHz may appear at 77, 101, 108, and 144 MHz when retested in a different shielded room. When the peak data points are connected, the resultant plots are quite similar.

When performing electric-field susceptibility measurements in a shielded room, there is a greater potential for erroneous results. Most occurrences of susceptibility are relatively broadband phenomena. If a radiated field peaks at 100 MHz, causing a malfunction in the operation of an electrocardiograph, the ECG will most likely malfunction at 95 MHz or 105 MHz or anywhere near 100 MHz, when tested in a different shielded room. Erroneous results may occur if the susceptibility of the device is very narrowband in nature. An example would be a device with a low-level internal oscillator. If the particular geometry of the shielded room causes the radiated field to null at the location of the device under test and at the frequency of the oscillator, then the device will appear to pass the test, when in fact it may be susceptible. The wide excursions of field strength are greatly alleviated by the use of a monitoring antenna near the test sample. As peaks and nulls are encountered, the field strength can be readjusted to the required level.

The use of a shielded enclosure was retained because it is the most efficient means of performing radiated measurements that is in widespread use. Anechoic chambers have been proposed as an alternative; however, they are inefficient at frequencies below 100 MHz. In fact, to be effective at 100 MHz, anechoic chambers require absorber 6 feet thick. For a chamber having inner dimensions of 10' x 10' x 8', the 6-foot thick absorber alone would cost in excess of $100,000.

TEM (Transverse Electro Magnetic) cells have been proposed as alternatives to shielded rooms[16]. Present TEM cells can only accomodate small items. A review of sales literature indicates the largest TEM cell on the market can accomodate devices having a maximum size of 23" x 23" x 8". Although the above TEM cell is effective only at frequencies below 100 MHz, the National Bureau of Standards is presently looking into ways to extend the size and frequency range of TEM cells[17].

Mode-stirred chambers may be a viable alternate for the higher frequency range[18]. Standing waves, which are a major limitation in TEM cells, are very necessary to the operation of mode-stirred chambers. At this time, however, these chambers are in the developmental state and are generally unavailable.

Open antenna ranges are practical only in the less populated portions of the country. In densely populated areas, the emissions from radio and TV stations would be too great to permit proper performance of radiated emission tests and the Federal Communications Commission would prohibit transmitting the radiated susceptibility signal level across the entire 10 kHz to 1 GHz frequency band.

The overriding concern on the part of the FDA is the availability of test facilities. There are several EMI test facilities across the nation, equipped with shielded rooms. There are very few equipped with anechoic chamber, TEM cells, or mode-stirred chambers.

REFERENCES

1. McDonnell Douglas Astronautics Co.-East. "EMC (Electromagnetic Compatibility) Standard for Medical Devices", FDA Contract 223-74-5246, Final Report. National Technical Information Service, No. PB 271635/AS.

2. Frank, V. A. and Londner, R. T., "The Hospital Electromagnetic Interference Environment," Journal of the Association for the Advancement of Medical Instrumentation, Vol. 5, No. 4, August 1971. Pages 246-254.

3. White, Don, "Measurement and Evaluation of Electromagnetic Emissions Within the NIH Clinical Center," prepared for the National Institute of Health, Bethesda, MD.

4. Ruggera, P. S., "Radio Frequency E-Field Measurements Within a Hospital Environment." 1975 IEEE EMI Symposium.

5. Tell, R. A., Nelson, J. C., Janes, D. E., "An Observation of Radio-frequency Interference to an Electronic Thermometer." U.S. Environmental Protection Agency internal report, March 1975.

6. Toler, J. C., "Electromagnetic Interference Levels in Hospitals," 1975 IEEE EMI Symposium.

7. MIL-STD-462, "Electromagnetic Interference Characteristics, Measurements of," Notice 3.

8. MIL-STD-461A, "Electromagnetic Interference Characteristics, Requirements for Equipment," Page 14.

9. SL-E-0002, "Electromagnetic Interference Characteristics, Measurements for Space Shuttle," Page 1. National Aeronautics & Space Administration.

10. FCC Rules and Regulations, Part 18, September 1972, Page 127.

11. Malack, J. A. and Engstrom, J. R., "RF Impedance of United States and European Power Lines." IEEE Trans., EMC Vol. EMC-18, No. 1. Pages 36-38.

12. Ruggera, P. S., "Quantitative Radiation Measurements near Electro-surgical Units," Proceedings: AAMI 12th Annual Meeting, March 77. p. 133.

13. FCC Rules and Regulations, Part 73, 1964, Pages 173, 237, and 239.

14. Tell, Richard A., et al. "Hospital proximities to nearby broadcast stations," 1978 IEEE International Symposium on Electromagnetic Compatibility. pp 100-105.