Oregon Fresh Market Grower's Association
P.O. Box 8579 • Portland, Oregon 97207 • Phone: (503) 241-8567 • FAX: (503) 274-9490
Scott Ashcom, Executive Director

0841 97 DEC 16 P1:46

Testimony of the Oregon Fresh Market Grower's Association
Before the U.S. Food and Drug Administration
Regarding the "Guide to Minimize Microbial Food Safety
Hazards For Fresh Fruits and Vegetables"
12 December 1997 in Portland, Oregon

Thank you for the opportunity to testify before you today regarding the draft "Guidance" document for fresh fruits and vegetables. The Oregon Fresh Market Grower's Association (OFMGA) represents growers and sellers of fresh fruits and vegetables in Oregon. We strongly support President Clinton's efforts in this area to help reduce insidents of sickness from bacteria, viruses, or other microbes due to poor handling and transportation of fresh produce. The overwhelming benefits to human health of increasing consumption of fresh fruits and vegetables makes it imparative that our nation have a safe, abundant, healthful supply of fresh produce for American consumers. We support the use of "guidance" instead of regulation in order to achieve these goals. Oregon farmers are presently required to meet standards for sanitation, water quality, and the use of manure or animal wastes in fertilization practices, which are probably more stringent than any to be found in other states. Hence, much of what the "Guidance" hopes to achieve is being done already through regulations by other federal and state agencies. This should simplify the task of FDA by recognizing the significant contributions of federal EPA and federal OSHA in areas of water quality and farmworker sanitation and health.

Water Quality

All Oregon farmers are required by Oregon law to meet the requirements of Oregon's Department of Environmental Quality (DEQ) for water quality in all matters of water management on all farms in the state. Oregon's DEQ enforces all federal water quality laws in Oregon, especially the Clean Water Act, under a memorandum of agreement with the U.S. Environmental Protection Agency (EPA). By law, Oregon is allowed to have water quality laws which are more stringent than the federal standards, and Oregon's DEQ has laws which are more stringent than the federal standards for water quality. Any farm in Oregon which is in compliance with Oregon's DEQ Water Quality Rules should be deemed to be in compliance with all water quality directives in the Guidelines. We would support making Oregon's water quality standards the national standards for water quality, but states with less stringent standards may find these rules, which our farmers comply with every day, very burdensome. We have supplied FDA with a copy of these Oregon Rules (Item A) and we ask that they be entered into the record of proceedings here.

Instead of FDA attempting to generate a duplicate set of regulations for agricultural water quality, we propose that FDA

97N-0451 TS1

use the standards recognized by EPA for agricultural water quality, and that any state which complies with EPA's water quality standards for agriculture be recognized as in compliance with the FDA Guidelines for microbial contamination of agricultural water.

Manure & Municipal Sewage Sludge

As with water quality standards generally, Oregon laws require that strict standards be met for use of animal manure (mostly from cattle, sheep, and chickens) as fertilizer on crops. DEQ and the Oregon Department of Agriculture (ODA) administer these laws. The use of animal wastes for fertilization is not a common practice in Oregon. The standards are strict, they are administered both by DEQ, and by ODA. ODA is the designated agency, and we understand that there are two representatives from ODA at this hearing to describe those regulations. Compliance with ODA/DEQ "Confined Animal Feeding or Holding Operations" rules should be deemed compliance with FDA's Guidance regarding the use of manure and municipal sewage sludge in crop fertilization. We have submitted a copy of the DEQ regulations for the record (Item B).

Sanitation & Hygiene

The health and cleanliness of farmworkers who handle fresh produce is of paramount importance to our growers and sellers. To ensure the sanitation of conditions in which our employees work, Oregon's Occupational Safety and Health Administration (OR-OSHA) has laws in place to protect worker sanitation conditions on the farm. These regulations are intricately detailed to force sanitary conditions in the workplace. We have submitted a copy of these rules for the record (Item C). Violations of these sanitation rules bring big fines for farmers. The purpose of these rules is to ensure that farmworkers, the ones who handle the fresh produce, have every opportunity to keep themselves clean and to practice hygiene, both for the health and safety of the worker, and for the health and safety of the public. Compliance with OR-OSHA rules on Sanitation and Health should be deemed compliance with the Guidelines. Once again, OR-OSHA enforces U.S. OSHA laws in Oregon under an agreement. We propose that FDA/USDA not duplicate these regulations, but rely upon them to affirm compliance with the intent of the Guidelines.

Transportation

We believe that there may be significant improvements in health benefits to the U.S. consumer by examining practices of long distance transportation handling of fresh produce bound for U.S. consumers. The longer the distance from farm to market, and the greater the number of handlers of fresh produce, the greater is the potential increased risk of contamination. Foreign shippers and farms should be required to comply with the same health, water quality, and consumer safety standards as U.S. growers. Thank you.

END

MONTEREY COUNTY

Department of Social Services

FAMILY AND CHILDREN'S SERVICES
OFFICE FOR AGING, COMMUNITY, AND EMPLOYMENT SERVICES
Area Agency on Aging
Community Action Agency

0842 '97 DEC 16 P1:46

Marie A. Glavin, Assistant Director Social Services

Comments: Town Meeting on President Clinton's new Produce Safety Initiative on Wed. Dec. 10, 1997 from 9 am to 4 pm.
Salinas Community Center, Gabilin Room, 409 N. Main St., Salinas, CA 93908.

From: Elsa Ramirez Brisson, MPH, RD
Supervising Public Health Nutritionist
(408) 755-8495, (408) 755-8467 Fax, e-mail at elsard@408meal.org
Programs: Older American's Act Elderly Nutrition Programs, Title III C1 & C2
In-Home Supportive Services, Nutrition Consultation

COMMENTS, QUESTIONS AND OBSERVATIONS:

1. Consumers are confused about "value-added" vegetables and the need to rinse and/or wash before using. Grocery store chain staff have recommended the rinsing of the vegetables. Concerns arise then from the vegetables consumed strait out of the packaging such as the salad bowls and kid snacks. Is there uniformity in the sanitation requirements imposed on all the manufactures of these products?

2. Concern about the spraying or misting at regular intervals of produce in the markets. I assume that this process is to ensure that products not wilt while being held longer in the cooled bins. Wet produce products could mildew. Vitamin loss is promoted by heat, light, water and time. All except light are conditions that the misted produce is subjected to.

3. Suggestions needed on how to field questions from consumers about residues on fruits and vegetable products. Since most fruits and vegetables are sold in bins product information that may be on the box is lost to the consumer. The recent out breaks of food borne illness originating in fruits has renewed the concern especially among senior citizens about the safety of foods. *(I personally feel we need to emphasize the cost/benefit of fruits and a vegetable to overall long-term health verses the risk of small doses of residues. To support this argument, I need condensed and referenced research reports as well as up-to-date information of changes in the industry to minimize pesticides and other pollutants.)*

PLEASE REPLY TO:

☐ Administrative Office
1000 S. Main St. #202
Salinas, CA 93901
(408) 755-8490
(408) 647-7899
(408) 755-8467 Fax

☐ FCS
1280 Broadway
Seaside, CA 93955
(408) 899-8015
(408) 899-8091 Fax

☐ FCS
116 Broadway
King City, CA 93930
(408) 385-7400
(408) 385-7450 Fax

☐ OACES
1281 Broadway
Seaside, CA 93955
(408) 899-8010
(408) 899-8022 Fax

4. I support the concept of point of purchase food and nutrition information in multiple languages and low-literacy formats. Short video clips and audio formats for the marketing get the consumers attention. Distribution of these marketing materials to providers of food and nutrition information in the traditional settings such as classrooms and clinics is helpful. As an educator I find that asking clients and students if they have seen the promotions such as five a day or the new packaging on milk cartons reinforces both my message and the message at the store. I find that often times the posters and messages have become just part of the scenery at the store and reminding individuals about them makes them shop in a more aware mode the next time.

5. I support the creation of the new federal guide on Good Agricultural Practices for fresh fruits and vegetables.
   Please use a format that is easy to read to include:
   - the use of larger type, no government abbreviations and jargon;
   - index and cross index so the topics from "farm to fork" are easy to find
   - include on the web and in the document, sound bytes, copy for newsprint and newsletters for use with consumers.

Cc:

Kalah Bumba, MS, Acting Director, Monterey County Area Agency on Aging
All Nutrition Program Contractors in Monterey County
Theresa Olsen, RD, RN, Senior Nutrition Program Consultant
Ann Black, MS, RD, Senior Nutrition Program Consultant
Cheryl Glover, RD, Senior Nutrition Program Consultant

ITEM A

DIVISION 41

STATE-WIDE WATER QUALITY MANAGEMENT PLAN; BENEFICIAL USES, POLICIES, STANDARDS, AND TREATMENT CRITERIA FOR OREGON

[**ED. NOTE:** The Tables and Figures referred to within the text of this Division are not printed in the Compilation. Copies may be obtained from the Department of Environmental Quality.]

0845 '97 DEC 16 P1:46

Preface

340-41-001

(1) The rules which follow, together with the applicable laws of the State of Oregon and the applicable regulations of the Environmental Quality Commission, set forth Oregon's plans for management of the quality of public waters within the State of Oregon.

(2) Under this plan, the Department of Environmental Quality will continue to manage water quality by evaluating each discharge and activity, whether existing or a new proposal, on a case-by-case basis, based on best information currently available and within the limiting framework of minimum standards, treatment criteria, and policies which are set forth in the plan.

(3) The EQC recognizes that the deadlines for adoption of this plan prevented thorough involvement by local government in the development and review of the plan. Accordingly, the Department will review the contents of this plan with affected local governments and will use their comments and suggestions in preparing amendments for consideration by the EQC not later than December, 1977. At a minimum, the processes of coordination with local governments will consist of the following elements:

(a) Work with county coordinators to set up meetings to explain the plan to groups of local governments and solicit their comments;

(b) Provide copies of the plan and supporting documents to any affected local governments who have not already received them;

(c) Seek input from councils of governments;

(d) Upon request, visit local level governments to discuss the plan;

(e) Work with statewide associations of local governments and others to inform local governments of the plan.

Stat. Auth.: ORS Ch. 468
Hist.: DEQ 128, f. & ef. 1-21-77

Definitions

340-41-005 [SA 26, f. 6-1-67; Repealed by DEQ 128, f. & ef. 1-21-77]

Definitions

340-41-006 Definitions applicable to all basins unless context requires otherwise:

(1) "BOD" means 5-day 20°C. Biochemical Oxygen Demand.

(2) "DEQ" or "Department" means the Oregon State Department of Environmental Quality.

(3) "DO" means dissolved oxygen.

(4) "EQC" or "Commission" means the Oregon State Environmental Quality Commission.

(5) "Estuarine Waters" means all mixed fresh and oceanic waters in estuaries or bays from the point of oceanic water intrusion inland to a line connecting the outermost points of the headlands or protective jetties.

(6) "Industrial Waste" means any liquid, gaseous, radioactive, or solid waste substance or a combination thereof resulting from any process of industry, manufacturing, trade, or business, or from the development or recovery of any natural resources.

(7) "Marine Waters" means all oceanic, offshore waters outside of estuaries or bays and within the territorial limits of the State of Oregon.

(8) "mg/l" means milligrams per liter.

(9) "Pollution" means such contamination or other alteration of the physical, chemical, or biological properties of any waters of the state, including change in temperature, taste, color, turbidity, silt, or odor of the waters, or such radioactive or other substance into any waters of the state which either by itself or in connection with any other substance present, will or can reasonably be expected to create a public nuisance or render such waters harmful, detrimental, or injurious to public health, safety, or welfare, or to domestic, commercial, industrial, agricultural, recreational, or other legitimate beneficial uses or to livestock, wildlife, fish or other aquatic life, or the habitat thereof.

(10) "Public Water" means the same as "waters of the state".

(11) "Sewage" means the water-carried human or animal waste from residences, buildings, industrial establishments, or other places together with such groundwater infiltration and surface water as may be present. The admixture with sewage as herein defined of industrial wastes or wastes, as defined in sections (6) and (13) of this rule, shall also be considered "sewage" within the meaning of this division.

(12) "SS" means suspended solids.

(13) "Wastes" means sewage, industrial wastes, and all other liquid, gaseous, solid, radioactive, or other substances which will or may cause pollution or tend to cause pollution of any water of the state.

(14) "Waters of the State" include lakes, bays, ponds, impounding reservoirs, springs, wells, rivers, streams, creeks, estuaries, marshes, inlets, canals, the Pacific Ocean within the territorial limits of the State of Oregon, and all other bodies of surface or underground waters, natural or artificial, inland or coastal, fresh or salt, public or private (except those private waters which do not combine or effect a junction with natural surface or underground waters), which are wholly or partially within or bordering the state or within its jurisdiction.

(15) "Low Flow Period" means the flows in a stream resulting from primarily groundwater discharge or baseflows augmented from lakes and storage projects during the driest period of the year. The dry weather period varies across the state according to climate and topography. Wherever the low flow period is indicated in the Water Quality Management Plans, this period has been approximated by the inclusive months. Where applicable in a waste discharge permit, the low flow period may be further defined.

(16) "Secondary Treatment" as the following context may require for:

(a) "Sewage Wastes" means the minimum level of treatment mandated by EPA regulations pursuant to Public Law 92-500;

(b) "Industrial and other waste sources" imply control equivalent to best practicable treatment (BPT).

(17) "Nonpoint Sources" refers to diffuse or unconfined sources of pollution where wastes can either enter into — or be conveyed by the movement of water to — public waters.

(18) "Loading Capacity (LC)" — The greatest amount of loading that a water can receive without violating water quality standards.

(19) "Load Allocation (LA)" — The portion of a receiving water's loading capacity that is attributed either to one of its existing or future nonpoint sources of pollution or to natural background sources. Load allocations are best estimates of the loading which may range from reasonably accurate estimates to gross allotments, depending on the availability of data and appropriate techniques for predicting loading. Whenever possible, natural and nonpoint source loads should be distinguished.

(20) "Wasteload Allocation (WLA)" — The portion of a receiving water's loading capacity that is allocated to one of its existing or future point sources of pollution. WLAs constitute a type of water quality-based effluent limitation.

(21) "Total Maximum Daily Load (TMDL)" — The sum of the individual WLAs for point sources and LAs for nonpoint sources and background. If a receiving water has only one point source discharger, the TMDL is the sum of that point source WLA plus the LAs for any nonpoint sources of pollution and natural background sources, tributaries, or adjacent segments. TMDLs can be expressed in terms of either mass per time, toxicity, or other appropriate measure. If Best Management Practices (BMPs) or other nonpoint source pollution controls make more stringent load allocations practicable, then wasteload allocations can be made less stringent. Thus, the TMDL process provides for nonpoint source control tradeoffs.

(22) "Land Development" refers to any human induced change to improved or unimproved real estate, including but not limited to construction, installation or expansion of a building or other structure, land division, drilling, and site alteration such as that due to land surface mining, dredging, grading, construction of earthen berms, paving, improvements for use as parking or storage, excavation or clearing.

(23) "Jurisdiction" refers to any city or county agency in the Tualatin River and Oswego Lake subbasins that regulates land development activities within its boundaries by approving plats, site plans or issuing permits for land development.

(24) "Erosion Control Plan" shall be a plan containing a list of best management practices to be applied during construction to control and limit soil erosion.

(25) "Public Works Project" means any land development conducted or financed by a local, state, or federal governmental body.

(26) "Stormwater Quality Control Facility" refers to any structure or drainage way that is designed, constructed, and maintained to collect and filter, retain, or detain surface water runoff during and after a storm event for the purpose of water quality improvement. It may also include, but not be limited to, existing features such as wetlands, water quality swales, and ponds which are maintained as stormwater quality control facilities.

(27) "Water Quality Swale" is a natural depression or wide shallow ditch used to temporarily store, route, or filter runoff for the purpose of improving water quality.

(28) "In Lieu Fee" means a fee collected by a jurisdiction in lieu of requiring construction of on-site stormwater quality control facilities.

(29) "Effluent Limited" can mean one of the following categories:

(a) A receiving stream which is meeting and/or is expected to meet water quality standards with the implementation of standard treatment technology which is secondary treatment for sewage wastes and best practicable treatment (BPT) for industrial and other waste sources;

(b) A receiving stream for which there is insufficient information to determine if water quality standards are being met with standard treatment technology.

(30) "Water Quality Limited" can mean one of the following categories:

(a) A receiving stream which does not meet instream water quality standards during the entire year or defined season even after the implementation of standard technology;

(b) A receiving stream which achieves and is expected to continue to achieve instream water quality standard but utilizes higher than standard technology to protect beneficial uses;

(c) A receiving stream for which there is insufficient information to determine if water quality standards are being met with higher than standard treatment technology or where through professional judgment the receiving stream would not be expected to meet water quality standards during the entire year or defined season without higher than standard technology.

(31) "Reserve Capacity" means that portion of a receiving stream's loading capacity which has not been allocated to point sources or nonpoint sources and natural background as waste load allocations or load allocations, respectively. The reserve capacity includes that loading capacity which has been set aside for a safety margin and is otherwise unallocated.

(32) "Aquatic Species" means any plants or animals which live at least part of their life cycle in waters of the State.

(33) "Biological Criteria" means numerical values or narrative expressions that describe the biological integrity of aquatic communities inhabiting waters of a given designated aquatic life use.

(34) "Designated Beneficial Use" means the purpose or benefit to be derived from a water body, as designated by the Water Resources Department or the Commission.

(35) "Indigenous" means supported in a reach of water or known to have been supported according to historical records compiled by State and Federal agencies or published scientific literature.

(36) "Resident Biological Community" means aquatic life expected to exist in a particular habitat when water quality standards for a specific ecoregion, basin, or water body are met. This shall be established by accepted biomonitoring techniques.

(37) "Without Detrimental Changes in the Resident Biological Community" means no loss of ecological integrity when compared to natural conditions at an appropriate reference site or region.

(38) "Ecological Integrity" means the summation of chemical, physical and biological integrity capable of supporting and maintaining a balanced, integrated, adaptive community of organisms having a species composition, diversity, and functional organization comparable to that of the natural habitat of the region.

(39) "Appropriate Reference Site or Region" means a site on the same water body, or within the same basin or ecoregion that has similar habitat conditions, and represents the water quality and biological community attainable within the areas of concern.

(40) "Critical Habitat" means those areas which support rare, threatened or endangered species, or serve as sensitive spawning and rearing areas for aquatic life.

(41) "High Quality Waters" means those waters which meet or exceed those levels that are necessary to support the propagation of fish, shellfish, and wildlife and recreation in and on the water, and other designated beneficial uses.

(42) "Outstanding Resource Waters" means those waters designated by the Environmental Quality Commission where existing high quality waters constitute an outstanding

state or national resource based on their extraordinary water quality or ecological values, or where special water quality protection is needed to maintain critical habitat areas.

(43) "Short-Term Disturbance" means a temporary disturbance where water quality standards may be violated briefly, but not of sufficient duration to cause acute or chronic effects on beneficial uses.

(44) "Intergravel Dissolved Oxygen" (IGDO) — The concentration of oxygen measured in the stream gravel pore water. For the purposes of compliance with criteria, the dissolved oxygen concentration should be measured within a redd or artificial redd, down-gradient of the egg pocket. Measurements should be taken within a limited time period; for example, prior to emergence of fry during the month of March.

(45) "Spatial Median" — The value which falls in the middle of a data set of multiple IGDO measurements taken within a spawning area. Half the samples should be greater than, and half the samples should be less than the spatial median.

(46) "Daily Mean" (dissolved oxygen) — The numeric average of an adequate number of data to describe the variation in dissolved oxygen concentration throughout a day, including daily maximums and minimums. For the purpose of calculating the mean, concentrations in excess of 100 percent of saturation are valued at the saturation concentration.

(47) "Monthly (30-day) Mean Minimum" (dissolved oxygen) — The minimum of the 30 consecutive day floating averages of the calculated daily mean dissolved oxygen concentration.

(48) "Weekly (seven-day) Mean Minimum" (dissolved oxygen) — The minimum of the seven consecutive day floating average of the calculated daily ***mean*** dissolved oxygen concentration.

(49) "Weekly (seven-day) Minimum Mean" (dissolved oxygen) — The minimum of the seven consecutive day floating average of the daily ***minimum*** concentration. For purposes of application of the criteria, this value will be used as the reference for diurnal minimums.

(50) "Minimum" (dissolved oxygen) — The minimum recorded concentration including seasonal and diurnal minimums.

(51) "Cold-Water Aquatic Life" — The aquatic communities that are physiologically restricted to cold water, composed of one or more species sensitive to reduced oxygen levels. Including but not limited to *Salmonidae* and cold-water invertebrates.

(52) "Cool-Water Aquatic Life" — The aquatic communities that are physiologically restricted to cool waters, composed of one or more species having dissolved oxygen requirements believed similar to the cold-water communities. Including but not limited to *Cottidae*, *Osmeridae*, *Acipenseridae*, and sensitive *Centrarchidae* such as the small-mouth bass.

(53) "Warm-Water Aquatic Life" — The aquatic communities that are adapted to warm-water conditions and do not contain either cold- or cool-water species.

(54) "Numeric Temperature Criteria" are measured as the seven-day moving average of the daily maximum temperatures. If there is insufficient data to establish a seven-day average of maximum temperatures, the numeric criteria shall be applied as an instantaneous maximum. The measurements shall be made using a sampling protocol appropriate to indicate impact to the beneficial uses;

(55) "Measurable Temperature Increase" means an increase in stream temperature of more than 0.25°F;

(56) "Anthropogenic", when used to describe "sources" or "warming", means that which results from human activity;

(57) "Ecologically Significant Cold-Water Refuge" exists when all or a portion of a waterbody supports stenotypic cold-water species (flora or fauna) not otherwise widely supported within the subbasin, and either:

(a) Maintains cold-water temperatures throughout the year relative to other segments in the subbasin, providing summertime cold-water holding or rearing habitat that is limited in supply, or;

(b) Supplies cold water to a receiving stream or downstream reach that supports cold-water biota.

Stat. Auth: ORS 183.500, 468.020, 468.705, 468.710 & 468.735 ORS 468B.048
Stat. Implemented: ORS 468B.048
Hist.: DEQ 128. f. & ef. 1-21-77; DEQ 24-1981, f. & ef. 9-8-81;
DEQ 16-1988, f. & cert. ef. 7-12-88; DEQ 16-1989, f. & cert. ef. 7-31-89 (and corrected 8-3-89); DEQ 30-1989, f. & cert. ef. 12-14-89; DEQ 22-1990, f. & cert. ef. 7-6-90; DEQ 14-1991, f. & cert. ef. 8-13-91; DEQ 17-1991, f. & cert. ef. 9-30-91

Highest and Best Practicable Treatment and Control Required

340-41-010 [SA 26, f. 6-1-67; Repealed by DEQ 128, f. & ef. 1-21-77]

Restriction on the Discharge of Sewage and Industrial Wastes and Human Activities Which Affect Water Quality in the Waters of the State

340-41-015 [SA 26, f. 6-1-67; Repealed by DEQ 128, f. & ef. 1-21-77]

Maintenance of Standards of Quality

340-41-020 [SA 26, f. 6-1-67; DEQ 28, f. 5-24-71, ef. 6-25-71; Repealed by DEQ 128, f. & ef. 1-21-77]

Implementation of Treatment Requirements and Water Quality Standards

340-41-022 [DEQ 28, f. 5-24-71, ef. 6-25-71; DEQ 46, f. 6-15-72, ef. 7-1-72; Repealed by DEQ 128, f. & ef. 1-21-77]

Mixing Zones

340-41-023 [DEQ 55, f. 7-2-73, ef. 7-15-73; Repealed by DEQ 128, f. & ef. 1-21-77]

Testing Methods

340-41-024 [DEQ 55, f. 7-2-73, ef. 7-15-73; Repealed by DEQ 128, f. & ef. 1-21-77]

General Water Quality Standards

340-41-025 [SA 26, f. 6-1-67; DEQ 39, f. 4-5-72, ef. 4-15-72; DEQ 55, f. 7-2-73, ef. 7-15-73; Repealed by DEQ 128, f. & ef. 1-21-77]

Policies and Guidelines Generally Applicable to All Basins

340-41-026 (1) In order to maintain the quality of waters in the State of Oregon, the following is the general policy of the EQC:

(a) Antidegradation Policy for Surface Waters. The purpose of the Antidegradation Policy is to guide decisions that affect water quality such that unnecessary degradation from point and nonpoint sources of pollution is prevented, and to protect, maintain, and enhance existing

surface water quality to protect all existing beneficial uses. The standards and policies set forth in OAR 340-41-120 through 340-41-962 are intended to implement the Antidegradation Policy;

(A) High Quality Waters Policy: Where existing water quality meets or exceeds those levels necessary to support propagation of fish, shellfish, and wildlife and recreation in and on the water, and other designated beneficial uses, that level of water quality shall be maintained and protected. The Environmental Quality Commission, after full satisfaction of the intergovernmental coordination and public participation provisions of the continuing planning process, and with full consideration of sections (2), (3) and (5) of this rule, however, may allow a lowering of water quality in these high quality waters if they find:

(i) No other reasonable alternatives exist except to lower water quality; and

(ii) The action is necessary and justifiable for economic or social development benefits and outweighs the environmental costs of lowered water quality; and

(iii) All water quality standards will be met and beneficial uses protected.

(B) The Director or a designee may allow lower water quality on a short term basis in order to respond to emergencies or to otherwise protect public health and welfare;

(C) Water Quality Limited Waters Policy: For water quality limited waterbodies, the water quality shall be managed as described in section (3) of this rule;

(D) Outstanding Resource Waters Policy: Where existing high quality waters constitute an outstanding state or national resource such as those waters designated as extraordinary resource waters, or as critical habitat areas, the existing water quality and water quality values shall be maintained and protected, and classified as "Outstanding Resource Waters of Oregon". The Commission may specially designate high quality waterbodies to be classified as Outstanding Resource Waters in order to protect the water quality parameters that affect ecological integrity of critical habitat or special water quality values that are vital to the unique character of those waterbodies. The Department will develop a screening process and establish a list of nominated waterbodies for Outstanding Resource Waters designation in the Bienniel Water Quality Status Assessment Report (305(b) Report). The priority waterbodies for nomination include:

(i) National Parks;

(ii) National Wild and Scenic Rivers;

(iii) National Wildlife Refuges;

(iv) State Parks; and

(v) State Scenic Waterways.

(E) The Department will bring to the Commission a list of waterbodies which are proposed for designation as Outstanding Resource Waters at the time of each Trienniel Water Quality Standards Review;

(F) In designating Outstanding Resource Waters, the Commission shall establish the water quality values to be protected and provide a process for determining what activities are allowed that would not affect the outstanding resource values. After the designation, the Commission shall not allow activities that may lower water quality below the level established except on a short term basis to respond to emergencies or to otherwise protect human health and welfare.

(b) Point source discharges shall follow policies and guidelines in sections (2), (5) and (6) of this rule, and nonpoint source activities shall follow guidelines in sections (7), (8), (9), (10), and (11) of this rule.

(2) In order to maintain the quality of waters in the State of Oregon, it is the general policy of the EQC to require that growth and development be accommodated by increased

efficiency and effectiveness of waste treatment and control such that measurable future discharged waste loads from existing sources do not exceed presently allowed discharged loads except as provided in section (3) of this rule.

(3) The Commission or Department may grant exceptions to sections (2) and (6) of this rule and approvals to section (5) of this rule for major dischargers and other dischargers, respectively. Major dischargers include those industrial and domestic sources that are classified as major sources for permit fee purposes in OAR 340-45-075(2).

(a) In allowing new or increased discharged loads, the Commission or Department shall make the following findings:

(A) The new or increased discharged load would not cause water quality standards to be violated;

(B) The new or increased discharged load would not unacceptably threaten or impair any recognized beneficial uses. In making this determination, the Commission or Department may rely upon the presumption that if the numeric criteria established to protect specific uses are met the beneficial uses they were designed to protect are protected. In making this determination the Commission or Department may also evaluate other state and federal agency data that would provide information on potential impacts to beneficial uses for which the numeric criteria have not been set;

(C) The new or increased discharged load shall not be granted if the receiving stream is classified as being water quality limited under OAR 340-41-006(30)(a), unless:

(i) The pollutant parameters associated with the proposed discharge are unrelated either directly or indirectly to the parameter(s) causing the receiving stream to violate water quality standards and being designated water quality limited; or

(ii) Total maximum daily loads (TMDLs), waste load allocations (WLAs) load allocations (LAs), and the reserve capacity have been established for the water quality limited receiving stream; and compliance plans under which enforcement action can be taken have been established; and there will be sufficient reserve capacity to assimilate the increased load under the established TMDL at the time of discharge; or

(iii) Effective July 1, 1996, in waterbodies designated water-quality limited for dissolved oxygen, when establishing WLAs under a TMDL for waterbodies meeting the conditions defined in this rule, the Department may at its discretion provide an allowance for WLAs calculated to result in no measurable reduction of dissolved oxygen. For this purpose, "no measurable reduction" is defined as no more than 0.10 mg/L for a single source and no more than 0.20 mg/L for all anthropogenic activities that influence the water quality limited segment. The allowance applies for surface water DO criteria and for Intergravel DO if a determination is made that the conditions are natural. The allowance for WLAs would apply only to surface water 30-day and seven-day means, and the IGDO action level; or

(iv) Under extraordinary circumstances to solve an existing, immediate, and critical environmental problem that the Commission or Department may consider a waste load increase for an existing source on a receiving stream designated water quality limited under OAR 340-41-006(30)(a) during the period between the establishment of TMDLs, WLAs and LAs and their achievement based on the following conditions:

(I) That TMDLs, WLAs and LAs have been set; and

(II) That a compliance plan under which enforcement actions can be taken has been established and is being implemented on schedule; and

(III) That an evaluation of the requested increased load shows that this increment of load

will not have an unacceptable temporary or permanent adverse effect on beneficial uses; and

(IV) That any waste load increase granted under subparagraph (iv) of this paragraph is temporary and does not extend beyond the TMDL compliance deadline established for the waterbody. If this action will result in a permanent load increase, the action has to comply with subparagraphs (i) or (ii) of this paragraph.

(D) Effective July 1, 1996, in any waterbody identified by the Department as exceeding the relevant numeric temperature criteria specified for each individual water quality management basin identified in OAR 340-41-205, OAR-340-41-245, OAR-340-41-285, OAR-340-41-325, OAR-340-41-365, OAR-340-41-445, OAR-340-41-485, OAR-340-41-525, OAR-340-41-565, OAR-340-41-605, OAR-340-41-645, OAR-340-41-685, OAR-340-41-725, OAR-340-41-765, OAR-340-41-805, OAR-340-41-845, OAR-340-41-885, OAR-340-41-925, OAR-340-41-965, and designated as water quality limited under Section 303(d) of the Clean Water Act, the following requirements shall apply to appropriate watersheds or stream segments in accordance with priorities established by the Department. The Department may determine that a plan is not necessary for a particular stream segment or segments within a water-quality limited basin based on the contribution of the segment(s) to the temperature problem:

(i) Anthropogenic sources are required to develop and implement a surface water temperature management plan which describes the best management practices, measures, and/or control technologies which will be used to reverse the warming trend of the basin, watershed, or stream segment identified as water quality limited for temperature;

(ii) Sources shall continue to maintain and improve, if necessary, the surface water temperature management plan in order to maintain the cooling trend until the numeric criterion is achieved or until the Department, in consultation with the Designated Management Agencies (DMAs), has determined that all feasible steps have been taken to meet the criterion and that the designated beneficial uses are not being adversely impacted. In this latter situation, the temperature achieved after all feasible steps have been taken will be the temperature criterion for the surface waters covered by the applicable management plan. The determination that all feasible steps have been taken will be based on, but not limited to, a site-specific balance of the following criteria: protection of beneficial uses; appropriateness to local conditions; use of best treatment technologies or management practices or measures; and cost of compliance;

(iii) Once the numeric criterion is achieved or the Department has determined that all feasible steps have been taken, sources shall continue to implement the practices or measures described in the surface water temperature management plan in order to continually achieve the temperature criterion;

(iv) For point sources, the surface water temperature management plan will be part of their National Pollutant Discharge Elimination System Permit (NPDES);

(v) For nonpoint sources, the surface water temperature management plan will be developed by designated management agencies (DMAs) which will identify the appropriate BMPs or measures;

(vi) A source (including but not limited to permitted point sources, individual landowners and land managers) in compliance with the Department or DMA (as appropriate) approved surface water temperature management plan shall not be deemed to be causing or contributing to a violation of the numeric criterion if the surface water temperature exceeds the criterion;

(vii) In waters the Department determines to be critical for bull trout recovery, the goal of a bull trout surface water temperature management plan is to specifically protect those habitat ranges necessary to maintain the viability of existing stocks by restoring stream and riparian

conditions or allowing them to revert to conditions attaining the coolest surface water temperatures possible under natural background conditions;

(E) Waters of the state exceeding the temperature criteria will be identified in the Clean Water Act (CWA), Section 303(d) list developed by the Department according to the schedule required by the Clean Water Act. This list will be prioritized in consultation with the DMAs to identify the order in which those waters will be addressed by the Department and the DMAs;

(F) In basins determined by the Department to be exceeding the numeric temperature criteria, and which are required to develop surface water temperature management plans, new or increased discharge loads from point sources which require an NPDES permit under Section 402 of the Clean Water Act or hydro-power projects which require certification under Section 401 of the Clean Water Act are allowed a 1.0°F total cumulative increase in surface water temperatures as the surface water temperature management plan is being developed and implemented for the water quality limited basin if:

(i) In the best professional judgment of the Department, the new or increased discharge load, even with the resulting 1.0°F cumulative increase, will not conflict with or impair the ability of a surface water temperature management plan to achieve the numeric temperature criteria; and

(ii) A new or expanding source must demonstrate that it fits within the 1.0°F increase and that its activities will not result in a measurable impact on beneficial uses. This latter showing must be made by demonstrating to the Department that the temperature change due to its activities will be less than or equal to 0.25°F under a conservative approach or by demonstrating the same to the EQC with appropriate modeling.

(G) Any source may petition the Department for an exception to paragraph (F) of this subsection, provided:

(i) The discharge will result in less than 1.0°F increase at the edge of the mixing zone, and subparagraph (ii) or (iii) of this paragraph applies;

(ii) The source provides the necessary scientific information to describe how the designated beneficial uses would not be adversely impacted; or

(iii) The source demonstrates that:

(I) It is implementing all reasonable management practices;

(II) Its activity will not significantly affect the beneficial uses; and

(III) The environmental cost of treating the parameter to the level necessary to assure full protection would outweigh the risk to the resource.

(H) Any source or DMA may petition the Commission for an exception to paragraph (F) of this subsection, provided:

(i) The source or DMA provides the necessary scientific information to describe how the designated beneficial uses would not be adversely impacted; or

(ii) The source or DMA demonstrates that:

(I) It is implementing all reasonable management practices;

(II) Its activity will not significantly affect the beneficial uses; and

(III) The environmental cost of treating the parameter to the level necessary to assure full protection would outweigh the risk to the resource.

(I) In waterbodies designated by the Department as water-quality limited for bacteria, and in accordance with priorities established by the Department, development and implementation of a bacteria management plan shall be required of those sources that the Department determines to be contributing to the problem. The Department may determine that a plan is not necessary for a

particular stream segment or segments within a water-quality limited basin based on the contribution of the segment(s) to the problem. The bacteria management plans will identify the technologies, BMPs and/or measures and approaches to be implemented by point and nonpoint sources to limit bacterial contamination. For point sources, their National Pollutant Discharge Elimination System permit is their bacteria management plan. For nonpoint sources, the bacteria management plan will be developed by designated management agencies (DMAs) which will identify the appropriate BMPs or measures and approaches.

(J) The activity, expansion, or growth necessitating a new or increased discharge load is consistent with the acknowledged local land use plans as evidenced by a statement of land use compatibility from the appropriate local planning agency.

(b) Oregon's water quality management policies and programs recognize that Oregon's water bodies have a finite capacity to assimilate waste. Unused assimilative capacity is an exceedingly valuable resource that enhances in-stream values specifically, and environmental quality generally. Allocation of any unused assimilative capacity should be based on explicit criteria. In addition to the conditions in subsection (a) of this section, the Commission or Department shall consider the following:

(A) Environmental Effects Criteria:

(i) Adverse Out-of-Stream Effects. There may be instances where the non-discharge or limited discharge alternatives may cause greater adverse environmental effects than the increased discharge alternative. An example may be the potential degradation of groundwater from land application of wastes;

(ii) Instream Effects. Total stream loading may be reduced through elimination or reduction of other source discharges or through a reduction in seasonal discharge. A source that replaces other sources, accepts additional waste from less efficient treatment units or systems, or reduces discharge loadings during periods of low stream flow may be permitted an increased discharge load year-round or during seasons of high flow, as appropriate;

(iii) Beneficial Effects. Land application, upland wetlands application, or other non-discharge alternatives for appropriately treated wastewater may replenish groundwater levels and increase streamflow and assimilative capacity during otherwise low streamflow periods.

(B) Economic Effects Criteria. When assimilative capacity exists in a stream, and when it is judged that increased loadings will not have significantly greater adverse environmental effects than other alternatives to increased discharge, the economic effect of increased loading will be considered. Economic effects will be of two general types:

(i) Value of Assimilative Capacity. The assimilative capacity of Oregon's streams are finite, but the potential uses of this capacity are virtually unlimited. Thus it is important that priority be given to those beneficial uses that promise the greatest return (beneficial use) relative to the unused assimilative capacity that might be utilized. In-stream uses that will benefit from reserve assimilative capacity, as well as potential future beneficial use, will be weighed against the economic benefit associated with increased loading;

(ii) Cost of Treatment Technology. The cost of improved treatment technology, non-discharge and limited discharge alternatives shall be evaluated.

(4)(a) A receiving stream shall be designated as water quality limited through the biennial water quality status assessment report prepared to meet the requirements of Section 305(b) of the Water Quality Act. Appendix A of the Status Assessment report shall identify: what waterbodies are water quality limited, the time of year the water quality standards violations occur, the segment of stream or area of waterbody limited, the parameter(s) of concern, whether it is water

quality limited under OAR 340-41-006(30)(a), (b) or (c). Appendix B and C of the Status Assessment report shall identify the specific evaluation process for designating waterbodies limited;

(b) The WQL list contained in Appendix A of the Status Assessment report shall be placed on public notice and reviewed through the public hearing process. At the conclusion of the hearing process and the evaluation of the testimony received, Appendix A will become the official water quality limited list. The Department may add a waterbody to the water quality limited list between status assessment reports after placing that action out on public notice and conducting a public hearing;

(c) For interstate waterbodies, the state shall be responsible for completing the requirements of section (3) of this rule for that portion of the interstate waterbody within the boundary of the state;

(d) For waterbodies designated WQL under OAR 340-41-006(30)(c), the Department shall establish a priority list and schedule for future water quality monitoring activities to determine if the waterbody should be designated WQL under OAR 340-41-006(30)(a) or (b), if estimated TMDLs need to be prepared, and if an implementation plan needs to be developed and implemented;

(e) For waterbodies designated WQL under OAR 340-41-006(30)(b), requests for load increases shall be considered following subsection (3)(b) of this rule.

(5) For any new waste sources, alternatives which utilize reuse or disposal with no discharge to public waters shall be given highest priority for use wherever practicable. New source discharges may be approved subject to the criteria in section (3) of this rule.

(6) No discharges of wastes to lakes or reservoirs shall be allowed except as provided in section (3) of this rule.

(7) Log handling in public waters shall conform to current EQC policies and guidelines.

(8) Sand and gravel removal operations shall be conducted pursuant to a permit from the Division of State Lands and separated from the active flowing stream by a water-tight berm wherever physically practicable. Recirculation and reuse of process water shall be required wherever practicable. Discharges, when allowed, or seepage or leakage losses to public waters shall not cause a violation of water quality standards or adversely affect legitimate beneficial uses.

(9) Logging and forest management activities shall be conducted in accordance with the Oregon Forest Practices Act so as to minimize adverse effects on water quality.

(10) Road building and maintenance activities shall be conducted in a manner so as to keep waste materials out of public waters and minimize erosion of cut banks, fills, and road surfaces.

(11) In order to improve controls over nonpoint sources of pollution, federal, state, and local resource management agencies will be encouraged and assisted to coordinate planning and implementation of programs to regulate or control runoff, erosion, turbidity, stream temperature, stream flow, and the withdrawal and use of irrigation water on a basin-wide approach so as to protect the quality and beneficial uses of water and related resources. Such programs may include, but not be limited to, the following:

(a) Development of projects for storage and release of suitable quality waters to augment low stream flow;

(b) Urban runoff control to reduce erosion;

(c) Possible modification of irrigation practices to reduce or minimize adverse impacts

from irrigation return flows;

(d) Stream bank erosion reduction projects.

Stat. Auth: ORS 183.500, 468.020, 468.705, 468.710 & 468.735 ORS 468B.048
Stat. Implemented: ORS 468B.048
Hist: DEQ 128, f. & ef. 1-21-77; DEQ 1-1980, f. & ef. 1-9-80; DEQ 13-1989, f. & cert. ef. 6-14-89; DEQ 22-1990, f. & cert. ef. 7-6-90; DEQ 17-1991, f. & cert. ef. 9-30-91

Biological Criteria

340-41-027 Waters of the state shall be of sufficient quality to support aquatic species without detrimental changes in the resident biological communities.

Stat. Auth.: ORS 468.735
Hist.: DEQ 14-1991, f. & cert. ef. 8-13-91

340-41-029 [Renumbered to 340-40-001 thru 340-40-080]

Beneficial Uses of Waters to be Protected by Special Water Quality Standards

340-41-030 [SA 26, f. 6-1-67; Repealed by DEQ 128, f. & ef. 1-21-77]

Policy on Sewerage Works Planning and Construction

340-41-034

(1) Oregon's publicly owned sewerage utilities have since 1956 developed an increasing reliance on federal sewerage works construction grant funds to meet a major portion of the cost of their sewerage works construction needs. This reliance did not appear unreasonable based on federal legislation passed up through 1978. Indeed, the Environmental Quality Commission (EQC) has routinely approved compliance schedules with deadlines contingent on federal funding. This reliance no longer appears reasonable based on recent and proposed legislative actions and appropriations and the general state of the nation's economy.

(2) The federal funds expected for future years will address a small percentage of Oregon's sewerage works construction needs. Thus, continued reliance by DEQ and public agencies on federal funding for sewerage works construction will not assure that sewage from a growing Oregon population will be adequately treated and disposed of so that health hazards and nuisance conditions are prevented and beneficial uses of public waters are not threatened or impaired by quality degradation.

(3) Therefore, the following statements of policy are established to guide future sewerage works planning and construction:

(a) The EQC remains strongly committed to its historic program of preventing water quality problems by requiring control facilities to be provided prior to the connection of new or increased waste loads;

(b) The EQC urges each sewerage utility in Oregon to develop, as soon as practicable, a financing plan which will assure that future sewerage works construction, operation, maintenance and replacement needs can be met in a timely manner. Such financing plans will be a prerequisite to Department issuance of permits for new or significantly modified sewerage facilities, for approval of plans for new or significantly modified sewerage facilities, or for access to funding assistance from the state pollution control bond fund. The Department may accept assurance of development

of such financing plan if necessary to prevent delay in projects already planned and in the process of implementation. The Department will work with the League of Oregon Cities and others as necessary to aid in the development of financing plans;

(c) No sewerage utility should assume that it will receive grant assistance to aid in addressing its planning and construction needs;

(d) Existing sewerage facility plans which are awaiting design and construction should be updated where necessary to include:

(A) Evaluation of additional alternatives where appropriate, and re-evaluation of costs of existing alternatives;

(B) Identification and delineation of phased construction alternatives; and

(C) A financing plan which will assure ability to construct facilities over an appropriate time span with locally derived funds.

(e) New sewerage works facility planning initiated after October 1, 1981 should not be approved without adequate consideration of alternatives and phased construction options, and without a financing plan which assures adequate funding for construction, operation, maintenance and replacement of sewerage facilities:

(A) The EQC recognizes that many cities in need of immediate sewerage works construction have completed planning and are awaiting design or construction funding. These cities have developed their program relying on 75 percent federal grants. They will have difficulty developing and implementing alternatives to fund immediate construction needs. Many are, or will be, under moratoriums on new connections because existing facilities are at, or near, capacity. The EQC will consider the following interim measures as a means of assisting these cities to get on a self-supporting basis provided that an approvable long-range program is presented:

(i) Temporary increases in waste discharge loading may be approved provided a minimum of secondary treatment, or equivalent control is maintained and beneficial uses of the receiving waterway are not impaired;

(ii) Installation and operation of temporary treatment works may be approved providing:

(I) The area served is inside an approved urban growth boundary and the proposal is consistent with State Land Use Planning laws;

(II) A master sewerage plan is adopted which shows how and when the temporary facilities will be phased out;

(III) The public agency responsible for implementing the master plan is the owner and operator of the temporary facilities;

(IV) Sewerage service to the area served by the temporary facility is necessary as part of the financing program for master plan implementation and no other option for service is practicably available;

(V) An acceptable receiving stream or method of effluent disposal is available for the temporary facility.

(B) Compliance schedules and other permit requirements may be modified to incorporate an approved interim program. Compliance with a permit so modified will be required at all times.

(f) Sewerage Construction programs should be designed to eliminate raw sewage bypassing during the summer recreation season (except for a storm event greater than the one in ten year 24 hour storm) as soon as practicable. A program and timetable should be developed through negotiation with each affected source. Bypasses which occur during the remainder of the year should be eliminated in accordance with an approved longer term maintenance based correction program. More stringent schedules may be imposed as necessary to protect drinking water supplies

and shellfish growing areas;

(g) Any sewerage utility that is presently in compliance and foresees a need to plan for future expansion to accommodate growth but elects to wait for federal funds for planning and construction will make such election with full knowledge that if existing facilities reach capacity before new facilities are completed, a moratorium on new connections will be imposed. Such moratorium will not qualify them for any special consideration since its presence is deemed a matter of their choice;

(h) The Department will continue to assist cities to develop interim and long-range programs, and construction schedules and to secure financing for essential construction.

Stat. Auth.: ORS Ch. 183
Hist.: DEQ 29-1981, f. & ef. 10-19-81

Special Water Quality Standards for Public Waters of Goose Lake in Lake County

340-41-035 [SA 26, f. 6-1-67; Repealed by DEQ 128, f. & ef. 1-21-77]

Special Water Quality Standards for Public Waters of the Main Stem Klamath River

340-41-040 [SA 26, f. 6-1-67; DEQ 55, f. 7-2-73, ef. 7-15-73; Repealed by DEQ 128, f. & ef. 1-21-77]

Special Water Quality Standards for the Public Waters of Multnomah Channel and the Main Stem Willamette River

340-41-045 [SA 26, f. 6-1-67; DEQ 55, f. 7-2-73, ef. 7-15-73; Repealed by DEQ 128, f. & ef. 1-21-77]

Special Water Quality Standards for the Public Waters of the Main Stem of the Columbia River From the Eastern Oregon-Washington Border Westward to the Pacific Ocean

340-41-050 [SA 26, f. 6-1-67; DEQ 55, f. 7-2-73, ef. 7-15-73; Repealed by DEQ 128, f. & ef. 1-21-77]

Special Water Quality Standards for the Public Waters of the Main Stem of the Grande Ronde River

340-41-055 [SA 26, f. 6-1-67; DEQ 55, f. 7-2-73, ef. 7-15-73; Repealed by DEQ 128, f. & ef. 1-21-77]

Water Quality Standards for the Public Waters of the Main Stem of the Walla Walla River

340-41-060 [SA 26, f. 6-1-67; DEQ 55, f. 7-2-73, ef. 7-15-73; Repealed by DEQ 128, f. & ef. 1-21-77]

Water Quality Standards for the Main Stem of the Snake River in and Adjacent to Oregon

340-41-065 [SA 26, f. 6-1-67; DEQ 55, f. 7-2-73, ef. 7-15-73; Repealed by DEQ 128, f. & ef. 1-21-77]

Water Quality Standards for the Marine and Estuarine Waters of Oregon

340-41-070 [SA 26, f. 6-1-67; Repealed by DEQ 128, f. & ef. 1-21-77]

Implementation and Enforcement Plan

340-41-075 [SA 27, f. 6-19-67; DEQ 38, f. 4-5-72, ef. 4-15-72; Repealed by DEQ 128, f. & ef. 1-21-77]

Special Water Quality and Waste Treatment Standards for the Rogue River Basin

340-41-080 [SA 94, f. 10-29-69; DEQ 55, f. 7-2-73, ef. 7-15-73; Repealed by DEQ 128, f. & ef. 1-21-77]

Special Water Quality and Waste Treatment Standards For the Umpqua River Basin

340-41-085 [SA 50, f. 10-29-69; DEQ 55, f. 7-2-73, ef. 7-15-73; Repealed by DEQ 128, f. & ef. 1-21-77]

Special Water Quality and Waste Treatment Standards for the Clackamas River Basin, Molalla River Basin, and Sandy River Basin

340-41-090 [SA 51, f. 10-29-69; DEQ 55, f. 7-2-73, ef. 7-15-73; Repealed by DEQ 128, f. & ef. 1-21-77]

Special Water Quality and Waste Treatment Standards for the Tualatin River Basin

340-41-095 [DEQ 2, f. 3-3-70, ef. 3-25-70; DEQ 55, f. 7-2-73, ef. 7-15-73; Repealed by DEQ 128, f. & ef. 1-21-77]

Special Water Quality and Waste Treatment Standards for the McKenzie River Basin and the Santiam River Basin

340-41-100 [DEQ 3, f. 3-3-70, ef. 3-25-70; DEQ 55, f. 7-2-73, ef. 7-15-73; Repealed by DEQ 128, f. & ef. 1-21-77]

Special Water Quality and Waste Treatment Standards for the Deschutes River Basin

340-41-105 [DEQ 4, f. 3-3-70, ef. 3-25-70; DEQ 55, f. 7-2-73, ef. 7-15-73; Repealed by DEQ 128,f. & ef. 1-21-77]

Implementation Program Applicable to All Basins

340-41-120 (1) No waste treatment and disposal facilities shall be constructed or operated and no wastes shall be discharged to public waters without obtaining a permit from the Department as required by ORS 468.740.

(2) Plans for all sewage and industrial waste treatment, control, and disposal facilities shall be submitted to the Department for review and approval prior to construction as required by ORS 468.742.

(3) Minimum design criteria for waste treatment and control facilities prescribed under this plan and such other waste treatment and controls as may be necessary to insure compliance with the water quality standards contained in this plan shall be provided in accordance with specific permit conditions for those sources or activities for which permits are required and the following implementation program:

(a) For new or expanded waste loads or activities, fully approved treatment or control facilities, or both shall be provided prior to discharge of any wastes from the new or expanded facilities or conduct of the new or expanded activity;

(b) For existing waste loads or activities, additional treatment or control facilities necessary to correct specific unacceptable water quality conditions shall be provided in

accordance with a specific program and timetable incorporated into the waste discharge permit for the individual discharger or activity. In developing treatment requirements and implementation schedules for existing installations or activities, consideration shall be given to the impact upon the overall environmental quality including air, water, land use, and aesthetics;

(c) Wherever minimum design criteria for waste treatment and control facilities set forth in this plan are more stringent than applicable federal standards and treatment levels currently being provided, upgrading to the more stringent requirements will be deferred until it is necessary to expand or otherwise modify or replace the existing treatment facilities. Such deferral will be acknowledged in the permit for the source;

(d) Where planning or design or construction of new or modified waste treatment and controls to meet prior applicable state or federal requirements is underway at the time this plan is adopted, such plans, design, or construction may be completed under the requirements in effect when the project was initiated. Timing for upgrading to meet more stringent future requirements will be as provided in section (3) of this rule.

(4) Confined animal feeding operations shall be regulated pursuant to OAR 340-41-005 through 340-51-080 in order to minimize potential adverse effect on water quality.

(5) Programs for control of pollution from nonpoint sources when developed by the Department, or by other agencies pursuant to Section 208 of Public Law 92-500 and approved by the Department, shall as applicable, be incorporated into this plan by amendment via the same process used to adopt the plan unless other procedures are established by law.

(6) Where minimum requirements of federal law or enforceable regulations are more stringent than specific provisions of this plan, the federal requirements shall prevail.

(7) Within framework of state-wide priority and available resources, the Department will monitor water quality within the basin for the purposes of evaluating conformance with the plan and developing information for future additions or updating.

(8) The EQC recognizes that the potential exists for conflicts between water quality management plans and the land use plans and resource management plans which local governments and other agencies must develop pursuant to law. In the event any such conflicts develop, it is the intent of the Department to meet with the local government or responsible agency to formulate proposed revisions to one or both so as to resolve the conflict. Revisions will be presented for adoption via the same process used to adopt the plan unless other specific procedures are established by law.

(9) The Department shall calculate and include effluent limits specified in pounds per day, which shall be the mass load limits for biochemical oxygen demand or carbonaceous biochemical oxygen demand and total suspended solids in National Pollutant Discharge Elimination System permits issued to all sewage treatment facilities. These limits shall be calculated as follows:

(a) Except as noted in paragraph (H) of this subsection, for existing facilities and for facilities receiving engineering plans and specifications approval from the Department for new treatment facilities or treatment facilities expanding the average dry weather treatment capacity, prior to June 30, 1992:

(A) During periods of low stream flows (approximately May 1 through October 31), the monthly average mass load expressed as pounds per day shall not exceed the applicable monthly concentration effluent limit times the design average dry weather flow expressed in million gallons per day times 8.34 pounds per gallons. The weekly average mass load expressed as

pounds per day shall not exceed the monthly average mass load times 1.5. The daily mass load expressed in pounds per day shall not exceed the monthly average mass load times 2.0;

(B) During the period of high stream flows (approximately November 1 through April 30), the monthly average mass load expressed as pounds per day shall not exceed the monthly concentration effluent limit times the design average wet weather flow expressed in million gallons per day times 8.34 pounds per gallon. The weekly average mass load expressed as pounds per day shall not exceed the monthly average mass load times 1.5. The daily mass load expressed in pounds per day shall not exceed the monthly average mass load times 2.0;

(C) On any day that the daily flow to a sewage treatment facility exceeds the lesser hydraulic capacity of the secondary treatment portion of the facility or twice the design average dry weather flow, the daily mass load limit shall not apply. The permittee shall operate the treatment facility at highest and best practicable treatment and control;

(D) The design average wet weather flow used in calculating mass loads shall be approved by the Department in accordance with prudent engineering practice and shall be based on a facility plan approved by the Department, engineering plans and specifications approved by the Department, or an engineering evaluation. The permittee shall submit documentation describing and supporting the design average wet weather flow with the permit application, application for permit renewal, or modification request, or upon request by the Department. The design average wet weather flow is defined as the average flow between November 1 and April 30 when the sewage treatment facility is projected to be at design capacity for that portion of the year;

(E) Mass loads assigned as described in paragraphs (B) and (C) of this subsection will not be subject to OAR 340-41-026(3);

(F) Mass loads as described in this rule will be included in permits upon renewal, or upon permit modification request;

(G) Within 180 days after permit renewal or modification, permittees receiving higher mass loads under this rule and having a separate sanitary sewer system shall submit to the Department for review and approval a proposed program and time schedule for identifying and reducing inflow. The program shall consist of the following:

(i) Identification of all overflow points and verification that sewer system overflows are not occurring up to a 24-hour, five-year storm event or equivalent;

(ii) Monitoring of all pump station overflow points; and

(iii) A program for identifying and removing all inflow sources into the permittees sewer system over which the permittee has legal control; and

(iv) For those permittees not having the necessary legal authority for all portions of the sewer system discharging into the permittee's sewer system or treatment facility, a program and schedule for gaining legal authority to require inflow reduction and a program and schedule for removing inflow sources.

(H) Within one year after the Department's approval of the program, the permittee shall begin implementation of the program.

(I) Paragraphs (A) through (G) of this subsection shall not apply to the cities of Athena, Elgin, Adair Village, Halsey, Harrisburg, Independence, Carlton and Sweet Home. Mass load limits have been individually assigned to these facilities.

(b) For new sewage treatment facilities or treatment facilities expanding the average dry weather treatment capacity, and receiving engineering plans and specifications approval from the Department after June 30, 1992, the mass load limits shall be calculated by the Department based

on the proposed treatment facility capabilities and the highest and best practicable treatment to minimize the discharge of pollutants;

(c) Mass load limits as defined in this rule may be replaced by more stringent limits if required by waste load allocations established in accordance with a TMDL for treatment facilities discharging to water quality limited streams, or if required to prevent or eliminate violations of water quality standards;

(d) In the event that the design average wet weather flow or the hydraulic secondary treatment capacity is not known or has not been approved by the Department at the time of permit issuance, the permit shall include as interim mass load limits the mass load limits in the previous permit issued to the permittee for the treatment facility. The permit shall also include a requirement that the permittee shall submit to the Department the design average wet weather flow and hydraulic secondary treatment capacity within 12 months after permit issuance. Upon review and approval of the design flow information, the Department will modify the permit and include mass load limits as described in subsection (a) of this section;

(e) Each permittee with existing sewage treatment facilities otherwise subject to subsection (a) of this section may choose mass load limits calculated as follows:

(A) The monthly average mass load expressed as pounds per day shall not exceed the applicable monthly concentration effluent limit times the design average dry weather flow expressed in million gallons per day times 8.34 pounds per gallon;

(B) The weekly average mass load expressed as pounds per day shall not exceed the monthly average mass load times 1.5;

(C) The daily mass load expressed in pounds per day shall not exceed the monthly average mass load times 2.0. In the event that existing mass load limits are retained by the permittee, the terms and requirements of subsection (a) of this section shall not apply;

(f) The Commission may grant exceptions to subsection (a) of this section. In allowing increased discharged loads, the Commission shall make the findings specified in OAR 340-41-026(3) for waste loads, and in addition shall make the following findings:

(i) That mass loads as calculated in subsection (a) of this section cannot be achieved with the existing treatment facilities operated at maximum efficiency at projected design flows; and

(ii) That there are no practicable alternatives to achieving the mass loads as calculated in subsection (a) of this section.

(10) Agricultural water quality management plans to reduce agricultural nonpoint source pollution shall be developed and implemented by the Oregon Department of Agriculture (ODA) through a cooperative agreement with the Department of Environmental Quality (DEQ) to implement applicable provisions of ORS 568.900-933 and ORS 561.191. If DEQ has reason to believe that agricultural discharges or activities are contributing to water quality problems resulting in water quality standards violations, DEQ shall hold a consultation with the ODA. If water quality impacts are likely from agricultural sources, and DEQ determines that a water quality management plan is necessary, the Director of DEQ shall write a letter to the Director of the ODA requesting that such a management plan be prepared and implemented to reduce pollutant loads and achieve the water quality criteria.

(11) EQC policy on surface water temperature (as regulated in the basin standards found in OAR 340-41-205, OAR-340-41-245, OAR-340-41-285, OAR-340-41-325, OAR-340-41-365, OAR-340-41-445, OAR-340-41-485, OAR-340-41-525, OAR-340-41-565, OAR-340-41-605, OAR-340-41-645, OAR-340-41-685, OAR-340-41-725, OAR-340-41-765, OAR-340-41-805, OAR-340-41-845, OAR-340-41-885, OAR-340-41-925, OAR-340-41-965:

(a) It is the policy of the Environmental Quality Commission (EQC) to protect aquatic ecosystems from adverse surface water warming caused by anthropogenic activities. The intent of the EQC is to minimize the risk to cold-water aquatic ecosystems from anthropogenic warming of surface waters, to encourage the restoration of critical aquatic habitat, to reverse surface water warming trends, to cool the waters of the State, and to control extremes in temperature fluctuations due to anthropogenic activities:

(A) The first element of this policy is to encourage the proactive development and implementation of best management practices or other measures and available temperature control technologies for nonpoint and point source activities to prevent thermal pollution of surface waters;

(B) The second element of this policy is to require the development and implementation of surface water temperature management plans for those basins exceeding the numeric temperature criteria identified in the basin standards. The surface water temperature management plans will identify the best management practices (BMPs) or measures and approaches to be taken by nonpoint sources, and technologies to be implemented by point sources to limit or eliminate adverse anthropogenic warming of surface waters.

(b) Surface water temperatures in general are warming throughout the State. These water temperatures are influenced by natural physical factors including, but not limited to solar radiation, stream-side shade, ambient air temperatures, heated water discharges, cold-water discharges, channel morphology, and stream flow. Surface water temperatures may also be affected by anthropogenic activities that discharge heated water, widen streams, or reduce stream shading, flows, and depth. These anthropogenic activities, as well as others, increase water temperatures. Anthropogenic activities may also result in the discharge of cold water that decreases water temperatures and affects biological cycles of aquatic species;

(c) The temperature criteria in the basin standards establish numeric and narrative criteria to protect designated beneficial uses and to initiate actions to control anthropogenic sources that adversely increase or decrease stream temperatures. Natural surface water temperatures at times exceed the numeric criteria due to naturally high ambient air temperatures, naturally heated discharges, naturally low stream flows or other natural conditions. These exceedances are not water quality standards violations when the natural conditions themselves cause water temperatures to exceed the numeric criteria. In these situations, the natural surface water temperatures become the numeric criteria. In surface waters where both natural and anthropogenic factors cause exceedances of the numeric criteria, each anthropogenic source will be responsible for controlling, through implementation of a management plan, only that portion of the temperature increase caused by that anthropogenic source;

(d) The purpose of the numeric criteria in the basin standards is to protect designated beneficial uses; this includes specific life cycle stages during the time periods they are present in a surface water of the state. Surface water temperature measurements taken to determine compliance with the identified criteria will be taken using a sampling protocol appropriate to indicate impact to the beneficial use. The EQC, in establishing these criteria, recognizes that new information is constantly being developed on water temperatures and how water temperatures affect different beneficial uses. Therefore, continued reevaluation of temperature information is needed to refine and revise numeric criteria in the basin standards over time. The EQC also recognizes that the development and implementation of control technologies and best management practices or measures to reduce anthropogenic warming is evolving and the achievement of the numeric criteria will be an iterative process;

(e) Surface water temperature management plans will be required according to OAR 340-41-026(3)(a)(D) when the relevant numeric temperature criteria are exceeded and the waterbody is designated as water-quality limited under Section 303(d) of the Clean Water Act. The plans will identify those steps, measures, technologies, and/or practices to be implemented by those sources determined by the Department to be contributing to the problem. The plan may be for an entire basin, a single watershed, a segment of a stream, single or multiple nonpoint source categories, single or multiple point sources or any combination of these, as deemed appropriate by the Department, to address the identified temperature problem:

(A) In the case of state and private forest lands, the practices identified in rules adopted pursuant to the State Forest Practices Act (FPA) will constitute the surface water temperature management plan for the activities covered by the act. Consequently, in those basins, watersheds or stream segments exceeding the relevant temperature criterion, and for those activities covered by the Forest Practices Act, the forestry component of the temperature management plan will be the practices required under the FPA. If the mandated practices need to be improved in specific basins, watersheds or stream segments to fully protect identified beneficial uses, the Departments of Forestry and Environmental Quality will follow the process described in ORS 527.765 to establish, implement, and improve practices in order to reduce thermal loads to achieve and maintain the surface water temperature criteria. Federal forest management agencies are required by the federal Clean Water Act to meet or exceed the substantive requirements of the state forestry nonpoint source program. The Department currently has Memoranda of Understanding with the U.S. Forest Service and Bureau of Land Management to implement this aspect of the Clean Water Act. These memoranda will be used to identify the temperature management plan requirements for federal forest lands;

(B) The temperature management plan for agricultural nonpoint sources shall be developed and implemented in the manner described in section (10) of this rule;

(C) The Department will be responsible for determining the appropriate surface water temperature management plan for individual and general NPDES permitted sources. The requirement for a surface water temperature management plan and the content of the plan will be appropriate to the contribution the permitted source makes to the temperature problem, the technologies and practices available to reduce thermal loads, and the potential for trading or mitigating thermal loads;

(D) In urban areas, the Department will work with appropriate state, county, municipal, and special district agencies to develop surface water temperature management plans that reduce thermal loads in basins, watersheds, or stream segments associated with the temperature violations so that the surface water temperature criteria are achieved.

(f) The EQC encourages the release of stored water from reservoirs to cool surface water in order to achieve the identified numeric criteria in the basin standards as long as there is no significant adverse impact to downstream designated beneficial uses from the cooler water temperatures. If the Department determines that a significant adverse impact is resulting from the cold-water release, the Department shall, at its discretion, require the development of a management plan to address the adverse impact created by the cold-water release;

(g) Maintaining low stream temperatures to the maximum extent practicable in basins where surface water temperatures are below the specific criteria identified in this rule shall be accomplished by implementing technology based permits, best management practices or other measures. Any measurable increase in surface water temperature resulting from anthropogenic

activities in these basins shall be in accordance with the antidegradation policy contained in OAR 340-41-026.

(12) Effluent Limitations for Bacteria: Except as allowed in subsection (c) of this section, upon NPDES permit renewal or issuance, or upon request for a permit modification by the permittee at an earlier date, effluent discharges to freshwaters, and estuarine waters other than shellfish growing waters shall not exceed a monthly log mean of 126 *E. coli* organisms per 100 ml. No single sample shall exceed 406 *E. coli* organisms per 100 ml. However, no violation will be found, for an exceedance if the permittee takes at least five consecutive re-samples at four-hour intervals beginning as soon as practicable (preferably within 28 hours) after the original sample was taken and the log mean of the five re-samples is less than or equal to 126 *E. coli*. The following conditions apply:

(a) If the Department finds that re-sampling within the timeframe outlined in this section would pose an undue hardship on a treatment facility, a more convenient schedule may be negotiated in the permit, provided that the permittee demonstrates that the sampling delay will result in no increase in the risk to water contact recreation in waters affected by the discharge;

(b) The in-stream criterion for chlorine listed in **Table 20** shall be met at all times outside the assigned mixing zone;

(c) For sewage treatment plants that are authorized to use reclaimed water pursuant to OAR Chapter 340, Division 55, and which also use a storage pond as a means to dechlorinate their effluent prior to discharge to public waters, effluent limitations for bacteria shall, upon request by the permittee, be based upon appropriate total coliform, limits as required by OAR Chapter 340, Division 55:

(A) For Level II limitations, no two consecutive samples shall exceed 240 total coliform per 100 ml and for Level III and Level IV limitations, no single sample shall exceeds 23 total coliform per 100 ml. However, no violation will be found for an exceedance under this paragraph if the permittee takes at least five consecutive re-samples at four hour intervals beginning as soon as practicable (preferably within 28 hours) after the original sample(s) were taken; and in the case of Level II effluent, the log mean of the five re-samples is less than or equal to 23 total coliform per 100 ml or, in the case of Level III and IV effluent, if the log mean of the five re-samples is less than or equal to 2.2 total coliform per 100 ml.

(13) Sewer Overflows in Winter: Domestic waste collection and treatment facilities are prohibited from discharging raw sewage to waters of the State during the period of November 1 through May 21, except during a storm event greater than the one-in-five-year, 24-hour duration storm. However, the following exceptions apply:

(a) The Commission may on a case-by-case basis approve a bacteria control management plan to be prepared by the permittee, for a basin or specified geographic area which describes hydrologic conditions under which the numeric bacteria criteria would be waived. These plans will identify the specific hydrologic conditions, identify the public notification and education processes that will be followed to inform the public about an event and the plan, describe the water quality assessment conducted to determine bacteria sources and loads associated with the specified hydrologic conditions, and describe the bacteria control program that is being implemented in the basin or specified geographic area for the identified sources;

(b) Facilities with separate sanitary and storm sewers existing on January 10, 1996, and which currently experience sanitary sewer overflows due to inflow and infiltration problems, shall submit an acceptable plan to the Department at the first permit renewal, which describes actions that will be taken to assure compliance with the discharge prohibition by January 1,

2010. Where discharges occur to a receiving stream with sensitive beneficial uses, the Department may negotiate a more aggressive schedule for discharge elimination;

(c) On a case-by-case basis, the beginning of winter may be defined as October 15 if the permittee so requests and demonstrates to the Department's satisfaction that the risk to beneficial uses, including water contact recreation, will not be increased due to the date change.

(14) Sewer Overflows in Summer: Domestic waste collection and treatment facilities are prohibited from discharging raw sewage to waters of the State during the period of May 22 through October 31, except during a storm event greater than the one-in-ten-year, 24-hour duration storm. The following exceptions apply:

(a) For facilities with combined sanitary and storm sewers, the Commission may on a case-by-case basis approve a bacteria control management plan such as that described in subsection (13)(a) of this rule;

(b) On a case-by-case basis, the beginning of summer may be defined as June 1 if the permittee so requests and demonstrates to the Department's satisfaction that the risk to beneficial uses, including water contact recreation, will not be increased due to the date change;

(c) For discharge sources whose permit identifies the beginning of summer as any date from May 22 through May 31: If the permittee demonstrates to the Department's satisfaction that an exceedance occurred between May 21 and June 1 because of a sewer overflow, and that no increase in risk to beneficial uses, including water contact recreation, occurred because of the exceedance, no violation shall be triggered if the storm associated with the overflow was greater than the one-in-five-year, 24-hour duration storm.

(15) Storm Sewers Systems Subject to Municipal NPDES Storm Water Permits: Best management practices shall be implemented for permitted storm sewers to control bacteria to the maximum extent practicable. In addition, a collection-system evaluation shall be performed prior to permit issuance or renewal so that illicit and cross connections are identified. Such connections shall be removed upon identification. A collection system evaluation is not required where the Department determines that illicit and cross connections are unlikely to exist.

(16) Storm Sewers Systems Not Subject to Municipal NPDES Storm Water Permits: A collection system evaluation shall be performed of non-permitted storm sewers by January 1, 2005, unless the Department determines that an evaluation is not necessary because illicit and cross connections are unlikely to exist. Illicit and cross-connections shall be removed upon identification.

(17) Water Quality Limited for Bacteria: In those waterbodies, or segments of waterbodies identified by the Department as exceeding the relevant numeric criteria for bacteria in the basin standards and designated as water-quality limited under Section 303(d) of the Clean Water Act, the requirements specified in OAR 340-41-026(3)(a)(I) and in section (10) of this rule shall apply.

Stat. Auth.: ORS 468B.030, ORS 468B.048
Stat. Implemented: ORS 468B.048
Hist.: DEQ 128, f. & ef. 1-21-77; DEQ 16-1992, f. & cert. ef. 8-7-92

Nuisance Phytoplankton Growth

340-41-150 The following values and imple-mentation program shall be applied to lakes, reservoirs, estuaries and streams, except for ponds and reservoirs less than ten acres in surface area, marshes and saline lakes:

(1) The following average Chlorophyll **a** values shall be used to identify water bodies where phytoplankton may impair the recognized beneficial uses:

(a) Natural lakes which thermally stratify: 0.01 mg/1;

(b) Natural lakes which do not thermally stratify, reservoirs, rivers and estuaries: 0.015 mg/1;

(c) Average Chlorophyll **a** values shall be based on the following methodology (or other methods approved by the Department): A minimum of three samples collected over any three consecutive months at a minimum of one representative location (e.g., above the deepest point of a lake or reservoir or at a point mid-flow of a river) from samples integrated from the surface to a depth equal to twice the secchi depth or the bottom (the lesser of the two depths); analytical and quality assurance methods shall be in accordance with the most recent edition of **Standard Methods for the Examination of Water and Wastewater**.

(2) Upon determination by the Department that the values in section (1) of this rule are exceeded, the Department shall:

(a) In accordance with a schedule approved by the Commission, conduct such studies as are necessary to describe present water quality; determine the impacts on beneficial uses; determine the probable causes of the exceedance and beneficial use impact; and develop a proposed control strategy for attaining compliance where technically and economically practicable. Proposed strategies could include standards for additional pollutant parameters, pollutant discharge load limitations, and other such provisions as may be appropriate. Where natural conditions are responsible for exceedance of the values in section (1) of this rule or beneficial uses are not impaired, the values in section (1) of this rule may be modified to an appropriate value for that water body;

(b) Conduct necessary public hearings pre-liminary to adoption of a control strategy, standards or modified values after obtaining Commission authorization;

(c) Implement the strategy upon adoption by the Commission.

(3) In cases where waters exceed the values in section (1) of this rule and the necessary studies are not completed, the Department may approve new activities (which require Department approval), new or additional (above currently approved permit limits) discharge loadings from point sources provided that it is determined that beneficial uses would not be significantly impaired by the new activity or discharge.

[**Publications:** The publication(s) referred to or incorporated by reference in this rule are available from the Department of Environmental Quality.]

Stat. Auth.: ORS Ch. 468
Hist.: DEQ 7-1986, f. & ef. 3-26-86

North Coast-Lower Columbia Basin

Beneficial Water Uses to be Protected

340-41-202 Water quality in the North Coast-Lower Columbia River Basin (see **Figures 1** and **2**) shall be managed to protect the recognized beneficial uses as indicated in **Table 1**.

Stat. Auth.: ORS Ch. 468
Hist.: DEQ 128, f. & ef. 1-21-77; DEQ 9-1985, f. & ef. 8-6-85

Water Quality Standards Not to be Exceeded (To be Adopted Pursuant to ORS 468.735 and Enforceable Pursuant to ORS 468.720, 468.990 and 468.992)

340-41-205 (1) Notwithstanding the water quality standards contained below, the highest and best practicable treatment and/or control of wastes, activities, and flows shall in every case be provided so as to maintain dissolved oxygen and overall water quality at the highest possible levels and water temperatures, coliform bacteria concentrations, dissolved chemical substances, toxic materials, radioactivity, turbidities, color, odor, and other deleterious factors at the lowest possible levels.

(2) No wastes shall be discharged and no activities shall be conducted which either alone or in combination with other wastes or activities will cause violation of the following standards in the waters of the North Coast — Lower Columbia River Basin:

(a) Dissolved oxygen (DO): The changes adopted by the Commission on January 11, 1996, become effective July 1, 1996. Until that time, the requirements of this rule that were in effect on January 10, 1996, apply:

(A) For waterbodies identified by the Department as providing salmonid spawning, during the periods from spawning until fry emergence from the gravels, the following criteria apply:

(i) The dissolved oxygen shall not be less than 11.0 mg/l. However, if the minimum intergravel dissolved oxygen, measured as a spatial median, is 8.0 mg/l or greater, then the DO criterion is 9.0 mg/l;

(ii) Where conditions of barometric pressure, altitude, and temperature preclude attainment of the 11.0 mg/l or 9.0 mg/l criteria, dissolved oxygen levels shall not be less than 95 percent of saturation.

(B) For waterbodies identified by the Department as providing salmonid spawning during the period from spawning until fry emergence from the gravels, the spatial median intergravel dissolved oxygen concentration shall not fall below 6.0 mg/l;

(C) A spatial median of 8.0 mg/l intergravel dissolved oxygen level shall be used to identify areas where the recognized beneficial use of salmonid spawning, egg incubation and fry emergence from the egg and from the gravels may be impaired and therefore require action by the Department. Upon determination that the spatial median intergravel dissolved oxygen concentration is below 8.0 mg/l, the Department may, in accordance with priorities established by the Department for evaluating water quality impaired waterbodies, determine whether to list the waterbody as water quality limited under the Section 303(d) of the Clean Water Act, initiate pollution control strategies as warranted, and where needed cooperate with appropriate designated management agencies to evaluate and implement necessary best management practices for nonpoint source pollution control;

(D) For waterbodies identified by the Department as providing cold-water aquatic life, the dissolved oxygen shall not be less than 8.0 mg/l as an absolute minimum. Where conditions of barometric pressure, altitude, and temperature preclude attainment of the 8.0 mg/l, dissolved oxygen shall not be less than 90 percent of saturation. At the discretion of the Department, when the Department determines that adequate information exists, the dissolved oxygen shall not fall below 8.0 mg/l as a 30-day mean minimum, 6.5 mg/l as a seven-day minimum mean, and shall not fall below 6.0 mg/l as an absolute minimum (**Table 21**);

(E) For waterbodies identified by the Department as providing cool-water aquatic life, the dissolved oxygen shall not be less than 6.5 mg/l as an absolute minimum. At the discretion of the Department, when the Department determines that adequate information exists, the dissolved

oxygen shall not fall below 6.5 mg/l as a 30-day mean minimum, 5.0 mg/l as a seven-day minimum mean, and shall not fall below 4.0 mg/l as an absolute minimum **(Table 21)**;

(F) For waterbodies identified by the Department as providing warm-water aquatic life, the dissolved oxygen shall not be less than 5.5 mg/l as an absolute minimum. At the discretion of the Department, when the Department determines that adequate information exists, the dissolved oxygen shall not fall below 5.5 mg/l as a 30-day mean minimum, and shall not fall below 4.0 mg/l as an absolute minimum **(Table 21)**;

(G) For estuarine water, the dissolved oxygen concentrations shall not be less than 6.5 mg/l (for coastal waterbodies);

(H) For marine waters, no measurable reduction in dissolved oxygen concentration shall be allowed.

(b) Temperature: The changes adopted by the Commission on January 11, 1996, become effective July 1, 1996. Until that time, the requirements of this rule that were in effect on January 10, 1996, apply. The method for measuring the numeric temperature criteria specified in this rule is defined in OAR 340-41-006(54):

(A) To accomplish the goals identified in OAR 340-41-120(11), unless specifically allowed under a Department-approved surface water temperature management plan as required under OAR 340-41-026(3)(a)(D), no measurable surface water temperature increase resulting from anthropogenic activities is allowed:

(i) In a basin for which salmonid fish rearing is a designated beneficial use, and in which surface water temperatures exceed 64.0°F (17.8°C);

(ii) In the Columbia River or its associated sloughs and channels from the mouth to river mile 309 when surface water temperatures exceed 68.0°F (20.0°C);

(iii) In waters and periods of the year determined by the Department to support native salmonid spawning, egg incubation, and fry emergence from the egg and from the gravels in a basin which exceeds 55.0°F (12.8°C);

(iv) In waters determined by the Department to support or to be necessary to maintain the viability of native Oregon bull trout, when surface water temperatures exceed 50.0°F (10.0°C);

(v) In waters determined by the Department to be ecologically significant cold-water refugia;

(vi) In stream segments containing federally listed Threatened and Endangered species if the increase would impair the biological integrity of the Threatened and Endangered population;

(vii) In Oregon waters when the dissolved oxygen (DO) levels are within 0.5 mg/l or 10 percent saturation of the water column or intergravel DO criterion for a given stream reach or subbasin;

(viii) In natural lakes.

(B) An exceedance of the numeric criteria identified in subparagraphs (A)(i) through (iv) of this subsection will not be deemed a temperature standard violation if it occurs when the air temperature during the warmest seven-day period of the year exceeds the 90th percentile of the seven-day average daily maximum air temperature calculated in a yearly series over the historic record. However, during such periods, the anthropogenic sources must still continue to comply with their surface water temperature management plans developed under OAR 340-41-026(3)(a)(D);

(C) Any source may petition the Commission for an exception to subparagraphs (A)(i) through (viii) of this subsection for discharge above the identified criteria if:

(i) The source provides the necessary scientific information to describe how the designated beneficial uses would not be adversely impacted; or

(ii) A source is implementing all reasonable management practices or measures; its activity will not significantly affect the beneficial uses; and the environmental cost of treating the parameter to the level necessary to assure full protection would outweigh the risk to the resource.

(D) Marine and estuarine waters: No significant increase above natural background temperatures shall be allowed, and water temperatures shall not be altered to a degree which creates or can reasonably be expected to create an adverse effect on fish or other aquatic life.

(c) Turbidity (Nephelometric Turbidity Units, NTU): No more than a ten percent cumulative increase in natural stream turbidities shall be allowed, as measured relative to a control point immediately upstream of the turbidity causing activity. However, limited duration activities necessary to address an emergency or to accommodate essential dredging, construction or other legitimate activities and which cause the standard to be exceeded may be authorized provided all practicable turbidity control techniques have been applied and one of the following has been granted:

(A) Emergency activities: Approval coordinated by DEQ with the Department of Fish and Wildlife under conditions they may prescribe to accommodate response to emergencies or to protect public health and welfare;

(B) Dredging, Construction or other Legitimate Activities: Permit or certification authorized under terms of Section 401 or 404 (Permits and Licenses, Federal Water Pollution Control Act) or OAR 141-85-100 et seq. (Removal and Fill Permits, Division of State Lands), with limitations and conditions governing the activity set forth in the permit or certificate.

(d) pH (hydrogen ion concentration): pH values shall not fall outside the following ranges:

(A) Marine waters: 7.0 - 8.5;

(B) Estuarine and fresh waters: 6.5 - 8.5. The following exception applies: Waters impounded by dams existing on January 1, 1996, which have pHs that exceed the criteria shall not be considered in violation of the standard if the Department determines that the exceedance would not occur without the impoundment and that all practicable measures have been taken to bring the pH in the impounded waters into compliance with the criteria.

(e) Bacteria standards:

(A) Numeric Criteria: Organisms of the coliform group commonly associated with fecal sources (MPN or equivalent membrane filtration using a representative number of samples) shall not exceed the criteria described in subparagraphs (i) and (ii) of this paragraph:

(i) Freshwaters and Estuarine Waters Other than Shellfish Growing Waters:

(I) A 30-day log mean of 126 *E. coli* organisms per 100 ml, based on a minimum of five (5) samples;

(II) No single sample shall exceed 406 *E. coli* organisms per 100 ml;

(ii) Marine Waters and Estuarine Shellfish Growing Waters: A fecal coliform median concentration of 14 organisms per 100 milliliters, with not more than ten percent of the samples exceeding 43 organisms per 100 ml.

(B) Raw Sewage Prohibition: No sewage shall be discharged into or in any other manner be allowed to enter the waters of the State unless such sewage has been treated in a manner approved by the Department or otherwise allowed by these rules;

(C) Animal Waste: Runoff contaminated with domesticated animal wastes shall be minimized and treated to the maximum extent practicable before it is allowed to enter waters of the State;

(D) Effluent Limitations and Water Quality Limited Waterbodies: Effluent limitations to implement the criteria in this rule are found in OAR 340-41-120(12) through (16). Implementation of the criteria in this rule in water quality limited waterbodies is described in OAR 340-41-026(3)(a)(I) and OAR 340-41-120(17).

(f) Bacterial pollution or other conditions deleterious to waters used for domestic purposes, livestock watering, irrigation, bathing, or shellfish propagation, or otherwise injurious to public health shall not be allowed;

(g) The liberation of dissolved gases, such as carbon dioxide, hydrogen sulfide, or other gases, in sufficient quantities to cause objectionable odors or to be deleterious to fish or other aquatic life, navigation, recreation, or other reasonable uses made of such waters shall not be allowed;

(h) The development of fungi or other growths having a deleterious effect on stream bottoms, fish or other aquatic life, or which are injurious to health, recreation, or industry shall not be allowed;

(i) The creation of tastes or odors or toxic or other conditions that are deleterious to fish or other aquatic life or affect the potability of drinking water or the palatability of fish or shellfish shall not be allowed;

(j) The formation of appreciable bottom or sludge deposits or the formation of any organic or inorganic deposits deleterious to fish or other aquatic life or injurious to public health, recreation, or industry shall not be allowed;

(k) Objectionable discoloration, scum, oily sleek, or floating solids, or coating of aquatic life with oil films shall not be allowed;

(l) Aesthetic conditions offensive to the human senses of sight, taste, smell, or touch shall not be allowed;

(m) Radioisotope concentrations shall not exceed maximum permissible concentrations (MPC's) in drinking water, edible fishes or shellfishes, wildlife, irrigated crops, livestock and dairy products, or pose an external radiation hazard;

(n)(A) The concentration of total dissolved gas relative to atmospheric pressure at the point of sample collection shall not exceed 110 percent of saturation, except when stream flow exceeds the ten-year, seven-day average flood. However, for Hatchery receiving waters and waters of less than two feet in depth, the concentration of total dissolved gas relative to atmospheric pressure at the point of sample collection shall not exceed 105 percent of saturation;

(B) The Commission may modify the total dissolved gas criteria in the Columbia River for the purpose of allowing increased spill for salmonid migration. The Commission must find that:

(i) Failure to act would result in greater harm to salmonid stock survival through in-river migration than would occur by increased spill;

(ii) The modified total dissolved gas criteria associated with the increased spill provides a reasonable balance of the risk of impairment due to elevated total dissolved gas to both resident biological communities and other migrating fish and to migrating adult and juvenile salmonids when compared to other options for in-river migration of salmon;

(iii) Adequate data will exist to determine compliance with the standards; and

(iv) Biological monitoring is occurring to document that the migratory salmonid and resident biological communities are being protected.

(C) The Commission will give public notice and notify all known interested parties and will make provision for opportunity to be heard and comment on the evidence presented by others, except that the Director may modify the total dissolved gas criteria for emergencies for a period not exceeding 48 hours;

(D) The Commission may, at its discretion, consider alternative modes of migration.

(o) Total Dissolved Solids: Guide concentrations listed below shall not be exceeded unless otherwise specifically authorized by DEQ upon such conditions as it may deem necessary to carry out the general intent of this plan and to protect the beneficial uses set forth in OAR 340-41-202:

(A) Columbia River — 500.0 mg/l;

(B) All Other Fresh Water Streams and Tributaries — 100.0 mg/l.

(p) Toxic Substances:

(A) Toxic substances shall not be introduced above natural background levels in the waters of the state in amounts, concentrations, or combinations which may be harmful, may chemically change to harmful forms in the environment, or may accumulate in sediments or bioaccumulate in aquatic life or wildlife to levels that adversely affect public health, safety, or welfare; aquatic life; wildlife; or other designated beneficial uses;

(B) Levels of toxic substances shall not exceed the criteria listed in **Table 20** which were based on criteria established by EPA and published in **Quality Criteria for Water (1986)**, unless otherwise noted;

(C) The criteria in paragraph (B) of this subsection shall apply unless data from scientifically valid studies demonstrate that the most sensitive designated beneficial uses will not be adversely affected by exceeding a criterion or that a more restrictive criterion is warranted to protect beneficial uses, as accepted by the Department on a site specific basis. Where no published EPA criteria exist for a toxic substance, public health advisories and other published scientific literature may be considered and used, if appropriate, to set guidance values;

(D) Bio-assessment studies such as laboratory bioassays or instream measurements of indigenous biological communities, shall be conducted, as the Department deems necessary, to monitor the toxicity of complex effluents, other suspected discharges or chemical substances without numeric criteria, to aquatic life. These studies, properly conducted in accordance with standard testing procedures, may be considered as scientifically valid data for the purposes of paragraph (C) of this subsection. If toxicity occurs, the Department shall evaluate and implement measures necessary to reduce toxicity on a case-by-case basis.

(3) Where the naturally occurring quality parameters of waters of the North Coast - Lower Columbia River Basin are outside the numerical limits of the above assigned water quality standards, the naturally occurring water quality shall be the standard. However, in such cases special restrictions, described in OAR 340-41-026(3)(a)(C)(iii), apply to discharges that affect dissolved oxygen.

(4) Mixing zones:

(a) The Department may allow a designated portion of a receiving water to serve as a zone of dilution for wastewaters and receiving waters to mix thoroughly and this zone will be defined as a mixing zone;

(b) The Department may suspend all or part of the water quality standards, or set less restrictive standards, in the defined mixing zone, provided that the following conditions are met:

(A) The water within the mixing zone shall be free of:

(i) Materials in concentrations that will cause acute toxicity to aquatic life as measured by a Department approved bioassay method. Acute toxicity is lethality to aquatic life as measured by a significant difference in lethal concentration between the control and 100 percent effluent in an acute bioassay test. Lethality in 100 percent effluent may be allowed due to ammonia and chlorine only when it is demonstrated on a case-by-case basis that immediate dilution of the effluent within the mixing zone reduces toxicity below lethal concentrations. The Department may on a case-by-case basis establish a zone of immediate dilution if appropriate for other parameters;

(ii) Materials that will settle to form objectionable deposits;

(iii) Floating debris, oil, scum, or other materials that cause nuisance conditions;

(iv) Substances in concentrations that produce deleterious amounts of fungal or bacterial growths.

(B) The water outside the boundary of the mixing zone shall:

(i) Be free of materials in concentrations that will cause chronic (sublethal) toxicity. Chronic toxicity is measured as the concentration that causes long-term sublethal effects, such as significantly impaired growth or reproduction in aquatic organisms, during a testing period based on test species life cycle. Procedures and end points will be specified by the Department in wastewater discharge permits;

(ii) Meet all other water quality standards under normal annual low flow conditions.

(c) The limits of the mixing zone shall be described in the wastewater discharge permit. In determining the location, surface area, and volume of a mixing zone area, the Department may use appropriate mixing zone guidelines to assess the biological, physical, and chemical character of receiving waters, and effluent, and the most appropriate placement of the outfall, to protect instream water quality, public health, and other beneficial uses. Based on receiving water and effluent characteristics, the Department shall define a mixing zone in the immediate area of a wastewater discharge to:

(A) Be as small as feasible;

(B) Avoid overlap with any other mixing zones to the extent possible and be less than the total stream width as necessary to allow passage of fish and other aquatic organisms;

(C) Minimize adverse effects on the indigenous biological community especially when species are present that warrant special protection for their economic importance, tribal significance, ecological uniqueness, or for other similar reasons as determined by the Department and does not block the free passage of aquatic life;

(D) Not threaten public health;

(E) Minimize adverse effects on other designated beneficial uses outside the mixing zone.

(d) The Department may request the applicant of a permitted discharge for which a mixing zone is required, to submit all information necessary to define a mixing zone, such as:

(A) Type of operation to be conducted;

(B) Characteristics of effluent flow rates and composition;

(C) Characteristics of low flows of receiving waters;

(D) Description of potential environmental effects;

(E) Proposed design for outfall structures.

(e) The Department may, as necessary, require mixing zone monitoring studies and/or bioassays to be conducted to evaluate water quality or biological status within and outside the mixing zone boundary;

(f) The Department may change mixing zone limits or require the relocation of an outfall if it determines that the water quality within the mixing zone adversely affects any existing beneficial uses in the receiving waters.

(g) **Alternate requirements for mixing zones**: For some existing or proposed discharges to some receiving streams, it may not be practicable to treat wastewater to meet instream water quality standards at the point of discharge or within a short distance from the point of discharge. Some of these discharges could be allowed without impairing the overall ecological integrity of the receiving streams, or may provide an overall benefit to the receiving stream. This section specifies the conditions and circumstances under which a mixing zone may be allowed by the Department that extends beyond the immediate area around a discharge point, or that extends across a stream width. An alternate mixing zone may be approved if the applicant demonstrates to the Department's satisfaction that the discharge (A) creates an overall environmental benefit, or (B) is to a constructed water course, or (C) is insignificant. The three circumstances under which alternate mixing zones may be established are described further below.

(A) **Overall environmental benefit**.

(i) Qualifying for alternate mixing zone based on overall environmental benefit: In order to qualify for an alternate mixing zone based on a finding of overall environmental benefit, the discharger must demonstrate to the Department's satisfaction the following:

(a) That all practical strategies have been or will be implemented to minimize the pollutant loads in the effluent; and

(b) For proposed increased discharges, the current actual discharge and mixing zone does not meet the requirements of a standard mixing zone; and

(c) Either that, on balance, an environmental benefit would be lost if the discharge did not occur, or that the discharger is prepared to undertake other actions that will mitigate the effect of the discharge to an extent resulting in a net environmental benefit to the receiving stream.

(d) For the purposes of this rule, the term "practical" shall include environmental impact, availability of alternatives, cost of alternatives, and other relevant factors.

(ii) Studies required and evaluation of studies: In order to demonstrate that, on balance, an environmental benefit will result from the discharge, the following information shall be provided by the applicant:

(a) The effluent flow and pollutant loads that are detected or expected in the effluent, by month, both average and expected worst case discharges. The parameters to be evaluated include at a minimum temperature, biochemical oxygen demand, total suspended solids, total dissolved solids, pH, settleable solids, e. coli bacteria, oil and grease, any pollutants listed in Table 20 of this rule division, and any pollutant for which the receiving stream has been designated by the Department as water quality limited; and

(b) Receiving stream flow, by month; and

(c) The expected impact of the discharge, by month, on the receiving stream for the entire proposed mixing zone area for all of the pollutants listed above. Included in this analysis shall be a comparison of the receiving stream water quality with the discharge and without the discharge; and

(d) A description of fish, other vertebrate populations, and macroinvertebrates that reside in or are likely to pass through the proposed mixing zone, including expected location (if known), species identification, stage of development, and time of year when their presence is expected. For existing discharges, the applicant shall provide the same information for similar

nearby streams that are unaffected by wastewater discharges. In addition, any threatened or endangered species in the immediate vicinity of the receiving stream shall be identified; and

(e) The expected impact of the discharge on aquatic organisms and/or fish passage, including any expected negative impacts from the effluent attracting fish where that is not desirable; and

(f) A description of the expected environmental benefits to be derived from the discharge or other mitigation measures proposed by the applicant, including but not limited to improvements in water quality, improvements in fish passage, and improvements in aquatic habitat. If the applicant proposes to undertake mitigation measures designed to provide environmental benefits (e.g., purchasing water or water conservation rights to increase stream flows or establishing stream cover to decrease temperature), the applicant shall describe the mitigation measures in detail, including a description of the steps it will take to ensure that the benefits of the mitigation measures are attained and are not lost or diminished over time.

(g) Some or all of the above study requirements may be waived by the Department, if the Department determines that the information is not needed. In the event that the Department does waive some or all of the above study requirements, the basis for waiving the requirements will be included in the permit evaluation report upon the next permit renewal or modification relating to the mixing zone.

(h) Upon request of the Department, the applicant shall conduct additional studies to further evaluate the impact of the discharge, which may include whole effluent toxicity testing, stream surveys for water quality, stream surveys for fish and other aquatic organisms, or other studies as specified by the Department.

(i) In evaluating whether an existing or proposed increase in an existing discharge would result in a net environmental benefit, the applicant shall use the native biological community in a nearby, similar stream that is unaffected by wastewater discharges. The Department shall consider all information generated as required in this rule and other relevant information. The evaluation shall consider benefits to the native aquatic biological community only.

(iii) Permit conditions: Upon determination by the Department that the discharge and mitigation measures (if any) will likely result in an overall environmental benefit, the Department shall include appropriate permit conditions to insure that the environmental benefits are attained and continue. Such permit conditions may include but not be limited to:

(a) Maximum allowed effluent flows and pollutant loads;

(b) Requirements to maintain land ownership, easements, contracts, or other legally binding measures necessary to assure that mitigation measures, if any, remain in place and effective;

(c) Special operating conditions;

(d) Monitoring and reporting requirements; and

(e) Studies to evaluate the effectiveness of mitigation measures.

(B) **Constructed water course**: A mixing zone may be extended through a constructed water course and into a natural water course. For the purposes of this rule, a constructed water course is one that was constructed for irrigation, site drainage, or wastewater conveyance, and has the following characteristics:

(i) Irrigation flows, stormwater runoff, or wastewater flows have replaced natural streamflow regimes; and

(ii) The channel form is greatly simplified in lengthwise and cross sectional profiles; and

(iii) Physical and biological characteristics that differ significantly from nearby natural

streams; and

(iv) A much lower diversity of aquatic species than found in nearby natural streams; and

(v) If the constructed water course is an irrigation canal, then it must have effective fish screens in place to qualify as a constructed water course.

(C) **Insignificant discharges**: Insignificant discharges are those that either by volume, pollutant characteristics, and/or temporary nature are expected to have little if any impact on beneficial uses in the receiving stream, and for which the extensive evaluations required for discharges to smaller streams are not warranted. For the purposes of this rule, only filter backwash discharges and underground storage tank cleanups are considered insignificant discharges.

(D) **Other requirements for alternate mixing zones**: The following are additional requirements for dischargers requesting an alternate mixing zone:

(i) Most discharges that qualify for an alternate mixing zone will extend through the receiving stream until a larger stream is reached, where thorough mixing of the effluent can occur and where the edge of the allowed mixing zone will be located. The portion of the mixing zone in the larger stream must meet all of the requirements of the standard mixing zone, including not blocking aquatic life passage; and

(ii) An alternate mixing zone shall not be granted if a municipal drinking water intake is located within the proposed mixing zone, and the discharge has a significant adverse impact on the drinking water source; and

(iii) The discharge will not pose an unreasonable hazard to the environment or pose a significant health risk, considering the likely pathways of exposure; and

(iv) The discharge shall not be acutely toxic to organisms passing through the mixing zone; and

(v) An alternate mixing zone shall not be granted if the substances discharged may accumulate in the sediments or bioaccumulate in aquatic life or wildlife to levels that adversely affect public health, safety, or welfare; aquatic life; wildlife; or other designated beneficial uses; and

(vi) In the event that the receiving stream is water quality limited, the requirements for discharges to water quality limited streams supersede this rule.

(5) Testing methods: The analytical testing methods for determining compliance with the water quality standards contained in this rule shall be in accordance with the most recent edition of **Standard Methods for the Examination of Water and Waste Water published jointly by the American Public Health Association, American Water Works Association, and Water Pollution Control Federation,** unless the Department has published an applicable superseding method, in which case testing shall be in accordance with the superseding method; provided, however, that testing in accordance with an alternative method shall comply with this rule if the Department has published the method or has approved the method in writing.

[**Publications:** The publication(s) referred to or incorporated by reference in this rule are available from the office of the Department of Environmental Quality.]

Stat. Auth.: ORS 468B.035 & 468.735; ORS 468B.048
Stat. Implemented: ORS 468B.048
Hist.: DEQ 128, f. & ef. 1-21-77; DEQ 1-1980, f. & ef. 1-9-80; DEQ 18-1987, f. & ef. 9-4-87; DEQ 14-1991, f. & cert. ef. 8-13-91; DEQ 17-1992, f. & cert. ef. 8-7-92 (and corrected 8-13-92)

Minimum Design Criteria for Treatment and Control of Wastes

340-41-215 Subject to the implementation program set forth in OAR 340-41-120, prior to discharge of any wastes from any new or modified facility to any waters of the North Coast — Lower Columbia River Basin, such wastes shall be treated and controlled in facilities designed in accordance with the following minimum criteria. (In designing treatment facilities, average conditions and a normal range of variability are generally used in establishing design criteria. A facility once completed and placed in operation should operate at or near the design limit most of the time but may operate below the design criteria limit at times due to variables which are unpredictable or uncontrollable. This is particularly true for biological treatment facilities. The actual operating limits are intended to be established by permit pursuant to ORS 468.740 and recognize that the actual performance level may at times be less than the design criteria.):

(1) Sewage wastes:

(a) During periods of low stream flows (approximately May 1 to October 31): Treatment resulting in monthly average effluent concen-trations not to exceed 20 mg/l of BOD and 20 mg/l of SS or equivalent control;

(b) During the period of high stream flows (approximately November 1 to April 30) and for direct ocean discharges: A minimum of secondary treatment or equivalent control and unless otherwise specifically authorized by the Department, operation of all waste treatment and control facilities at maximum practicable efficiency and effectiveness so as to minimize waste discharges to public waters;

(c) Effluent BOD concentrations in mg/l, divided by the dilution factor (ratio of receiving stream flow to effluent flow) shall not exceed one unless otherwise approved by the EQC;

(d) Sewage wastes shall be disinfected, after treatment, equivalent to thorough mixing with sufficient chlorine to provide a residual of at least 1 part per million after 60 minutes of contact time unless otherwise specifically authorized by permit;

(e) Positive protection shall be provided to prevent bypassing raw or inadequately treated sewage to public waters unless otherwise approved by the Department where elimination of inflow and infiltration would be necessary but not presently practicable;

(f) More stringent waste treatment and control requirements may be imposed where special conditions may require.

(2) Industrial wastes:

(a) After maximum practicable inplant control, a minimum of secondary treatment or equivalent control (reduction of suspended solids and organic material where present in significant quantities, effective disinfection where bacterial organisms of public health significance are present, and control of toxic or other deleterious substances);

(b) Specific industrial waste treatment require-ments shall be determined on an individual basis in accordance with the provisions of this plan, applicable federal requirements, and the following:

(A) The uses which are or may likely be made of the receiving stream;

(B) The size and nature of flow of the receiving stream;

(C) The quantity and quality of wastes to be treated; and

(D) The presence or absence of other sources of pollution on the same watershed.

(c) Where industrial, commercial, or agricul-tural effluents contain significant quantities of potentially toxic elements, treatment requirements shall be determined utilizing appropriate bioassays;

(d) Industrial cooling waters containing significant heat loads shall be subjected to offstream cooling or heat recovery prior to discharge to public waters;

(e) Positive protection shall be provided to prevent bypassing of raw or inadequately treated industrial wastes to any public waters;

(f) Facilities shall be provided to prevent and contain spills of potentially toxic or hazardous materials and a positive program for containment and cleanup of such spills should they occur shall be developed and maintained.

Stat. Auth.: ORS Ch. 468
Hist.: DEQ 128, f. & ef. 1-21-77

Mid Coast Basin

Beneficial Water Uses to be Protected

340-41-242 Water quality in the Mid Coast Basin (see **Figures 1** and **3**) shall be managed to protect the recognized beneficial uses as indicated in **Table 2**.

Stat. Auth.: ORS Ch. 468
Hist.: DEQ 128, f. & ef. 1-21-77; DEQ 9-1985, f. & ef. 8-6-85

Water Quality Standards Not to be Exceeded (To be Adopted Pursuant to ORS 468.735 and Enforceable Pursuant to ORS 468.720, 468.990, and 468.992)

340-41-245 (1) Notwithstanding the water quality standards contained below, the highest and best practicable treatment and/or control of wastes, activities, and flows shall in every case be provided so as to maintain dissolved oxygen and overall water quality at the highest possible levels and water temperatures, coliform bacteria concentrations, dissolved chemical substances, toxic materials, radioactivity, turbidities, color, odor, and other deleterious factors at the lowest possible levels.

(2) No wastes shall be discharged and no activities shall be conducted which either alone or in combination with other wastes or activities will cause violation of the following standards in the waters of the Mid Coast Basin:

(a) Dissolved oxygen (DO): The changes adopted by the Commission on January 11, 1996, become effective July 1, 1996. Until that time, the requirements of this rule that were in effect on January 10, 1996, apply:

(A) For waterbodies identified by the Department as providing salmonid spawning, during the periods from spawning until fry emergence from the gravels, the following criteria apply:

(i) The dissolved oxygen shall not be less than 11.0 mg/l. However, if the minimum intergravel dissolved oxygen, measured as a spatial median, is 8.0 mg/l or greater, then the DO criterion is 9.0 mg/l;

(ii) Where conditions of barometric pressure, altitude, and temperature preclude attainment of the 11.0 mg/l or 9.0 mg/l criteria, dissolved oxygen levels shall not be less than 95 percent of saturation.

(B) For waterbodies identified by the Department as providing salmonid spawning during the period from spawning until fry emergence from the gravels, the spatial median intergravel dissolved oxygen concentration shall not fall below 6.0 mg/l;

(C) A spatial median of 8.0 mg/l intergravel dissolved oxygen level shall be used to identify areas where the recognized beneficial use of salmonid spawning, egg incubation and fry emergence

from the egg and from the gravels may be impaired and therefore require action by the Department. Upon determination that the spatial median intergravel dissolved oxygen concentration is below 8.0 mg/l, the Department may, in accordance with priorities established by the Department for evaluating water quality impaired waterbodies, determine whether to list the waterbody as water quality limited under the Section 303(d) of the Clean Water Act, initiate pollution control strategies as warranted, and where needed cooperate with appropriate designated management agencies to evaluate and implement necessary best management practices for nonpoint source pollution control;

(D) For waterbodies identified by the Department as providing cold-water aquatic life, the dissolved oxygen shall not be less than 8.0 mg/l as an absolute minimum. Where conditions of barometric pressure, altitude, and temperature preclude attainment of the 8.0 mg/l, dissolved oxygen shall not be less than 90 percent of saturation. At the discretion of the Department, when the Department determines that adequate information exists, the dissolved oxygen shall not fall below 8.0 mg/l as a 30-day mean minimum, 6.5 mg/l as a seven-day minimum mean, and shall not fall below 6.0 mg/l as an absolute minimum (**Table 21**);

(E) For waterbodies identified by the Department as providing cool-water aquatic life, the dissolved oxygen shall not be less than 6.5 mg/l as an absolute minimum. At the discretion of the Department, when the Department determines that adequate information exists, the dissolved oxygen shall not fall below 6.5 mg/l as a 30-day mean minimum, 5.0 mg/l as a seven-day minimum mean, and shall not fall below 4.0 mg/l as an absolute minimum (**Table 21**);

(F) For waterbodies identified by the Department as providing warm-water aquatic life, the dissolved oxygen shall not be less than 5.5 mg/l as an absolute minimum. At the discretion of the Department, when the Department determines that adequate information exists, the dissolved oxygen shall not fall below 5.5 mg/l as a 30-day mean minimum, and shall not fall below 4.0 mg/l as an absolute minimum (**Table 21**);

(G) For estuarine water, the dissolved oxygen concentrations shall not be less than 6.5 mg/l (for coastal waterbodies);

(H) For marine waters, no measurable reduction in dissolved oxygen concentration shall be allowed.

(b) Temperature: The changes adopted by the Commission on January 11, 1996, become effective July 1, 1996. Until that time, the requirements of this rule that were in effect on January 10, 1996, apply. The method for measuring the numeric temperature criteria specified in this rule is defined in OAR 340-41-006(54):

(A) To accomplish the goals identified in OAR 340-41-120(11), unless specifically allowed under a Department-approved surface water temperature management plan as required under OAR 340-41-026(3)(a)(D), no measurable surface water temperature increase resulting from anthropogenic activities is allowed:

(i) In a basin for which salmonid fish rearing is a designated beneficial use, and in which surface water temperatures exceed 64.0°F (17.8°C);

(ii) In waters and periods of the year determined by the Department to support native salmonid spawning, egg incubation, and fry emergence from the egg and from the gravels in a basin which exceeds 55.0°F (12.8°C);

(iii) In waters determined by the Department to support or to be necessary to maintain the viability of native Oregon bull trout, when surface water temperatures exceed 50.0°F (10.0°C);

(iv) In waters determined by the Department to be ecologically significant cold-water refugia;

(v) In stream segments containing federally listed Threatened and Endangered species if the increase would impair the biological integrity of the Threatened and Endangered population;

(vi) In Oregon waters when the dissolved oxygen (DO) levels are within 0.5 mg/l or 10 percent saturation of the water column or intergravel DO criterion for a given stream reach or subbasin;

(vii) In natural lakes.

(B) An exceedance of the numeric criteria identified in subparagraphs (A)(i) through (iii) of this subsection will not be deemed a temperature standard violation if it occurs when the air temperature during the warmest seven-day period of the year exceeds the 90th percentile of the seven-day average daily maximum air temperature calculated in a yearly series over the historic record. However, during such periods, the anthropogenic sources must still continue to comply with their surface water temperature management plans developed under OAR 340-41-026(3)(a)(D);

(C) Any source may petition the Commission for an exception to subparagraphs (A)(i) through (vii) of this subsection for discharge above the identified criteria if:

(i) The source provides the necessary scientific information to describe how the designated beneficial uses would not be adversely impacted; or

(ii) A source is implementing all reasonable management practices or measures; its activity will not significantly affect the beneficial uses; and the environmental cost of treating the parameter to the level necessary to assure full protection would outweigh the risk to the resource.

(D) Marine and estuarine waters: No significant increase above natural background temperatures shall be allowed, and water temperatures shall not be altered to a degree which creates or can reasonably be expected to create an adverse effect on fish or other aquatic life.

(c) Turbidity (Nephelometric Turbidity Units, NTU): No more than a ten percent cumulative increase in natural stream turbidities shall be allowed, as measured relative to a control point immediately upstream of the turbidity causing activity. However, limited duration activities necessary to address an emergency or to accommodate essential dredging, construction or other legitimate activities and which cause the standard to be exceeded may be authorized provided all practicable turbidity control techniques have been applied and one of the following has been granted:

(A) Emergency activities: Approval coordinated by DEQ with the Department of Fish and Wildlife under conditions they may prescribe to accommodate response to emergencies or to protect public health and welfare;

(B) Dredging, Construction or other Legitimate Activities: Permit or certification authorized under terms of Section 401 or 404 (Permits and Licenses, Federal Water Pollution Control Act) or OAR 141-85-100 et seq. (Removal and Fill Permits, Division of State Lands), with limitations and conditions governing the activity set forth in the permit or certificate.

(d) pH (hydrogen ion concentration): pH values shall not fall outside the following ranges:

(A) Marine waters: 7.0 – 8.5;

(B) Estuarine and fresh waters: 6.5 – 8.5. The following exception applies: Waters impounded by dams existing on January 1, 1996, which have pHs that exceed the criteria shall not be considered in violation of the standard if the Department determines that the exceedance would not occur without the impoundment and that all practicable measures have been taken to bring the pH in the impounded waters into compliance with the criteria.

(e) Bacteria standards:

(A) Numeric Criteria: Organisms of the coliform group commonly associated with fecal sources (MPN or equivalent membrane filtration using a representative number of samples) shall not exceed the criteria described in subparagraphs (i) and (ii) of this paragraph:

(i) Freshwaters and Estuarine Waters Other than Shellfish Growing Waters:

(I) A 30-day log mean of 126 *E. coli* organisms per 100 ml, based on a minimum of five (5) samples;

(II) No single sample shall exceed 406 *E. coli* organisms per 100 ml;

(ii) Marine Waters and Estuarine Shellfish Growing Waters: A fecal coliform median concentration of 14 organisms per 100 milliliters, with not more than ten percent of the samples exceeding 43 organisms per 100 ml.

(B) Raw Sewage Prohibition: No sewage shall be discharged into or in any other manner be allowed to enter the waters of the State unless such sewage has been treated in a manner approved by the Department or otherwise allowed by these rules;

(C) Animal Waste: Runoff contaminated with domesticated animal wastes shall be minimized and treated to the maximum extent practicable before it is allowed to enter waters of the State;

(D) Effluent Limitations and Water Quality Limited Waterbodies: Effluent limitations to implement the criteria in this rule are found in OAR 340-41-120(12) through (16). Implementation of the criteria in this rule in water quality limited waterbodies is described in OAR 340-41-026(3)(a)(I) and OAR 340-41-120(17).

(f) Bacterial pollution or other conditions deleterious to waters used for domestic purposes, livestock watering, irrigation, bathing, or shellfish propagation, or otherwise injurious to public health shall not be allowed;

(g) The liberation of dissolved gases, such as carbon dioxide, hydrogen sulfide, or other gases, in sufficient quantities to cause objectionable odors or to be deleterious to fish or other aquatic life, navigation, recreation, or other reasonable uses made of such waters shall not be allowed;

(h) The development of fungi or other growths having a deleterious effect on stream bottoms, fish or other aquatic life, or which are injurious to health, recreation, or industry shall not be allowed;

(i) The creation of tastes or odors or toxic or other conditions that are deleterious to fish or other aquatic life or affect the potability of drinking water or the palatability of fish or shellfish shall not be allowed;

(j) The formation of appreciable bottom or sludge deposits or the formation of any organic or inorganic deposits deleterious to fish or other aquatic life or injurious to public health, recreation, or industry shall not be allowed;

(k) Objectionable discoloration, scum, oily sleek, or floating solids, or coating of aquatic life with oil films shall not be allowed;

(l) Aesthetic conditions offensive to the human senses of sight, taste, smell, or touch shall not be allowed;

(m) Radioisotope concentrations shall not exceed maximum permissible concentrations (MPC's) in drinking water, edible fishes or shellfishes, wildlife, irrigated crops, livestock and dairy products, or pose an external radiation hazard;

(n) The concentration of total dissolved gas relative to atmospheric pressure at the point of sample collection shall not exceed 110 percent of saturation, except when stream flow exceeds the ten-year, seven-day average flood. However, for Hatchery receiving waters and waters of less than two feet in depth, the concentration of total dissolved gas relative to atmospheric pressure at the point of sample collection shall not exceed 105 percent of saturation;

(o) Total Dissolved Solids: Guide concentrations listed below shall not be exceeded unless otherwise specifically authorized by DEQ upon such conditions as it may deem necessary to carry out the general intent of this plan and to protect the beneficial uses set forth in OAR 340-41-242: 100.0 mg/l;

(p) Toxic Substances:

(A) Toxic substances shall not be introduced above natural background levels in the waters of the state in amounts, concentrations, or combinations which may be harmful, may chemically change to harmful forms in the environment, or may accumulate in sediments or bio-accumulate in aquatic life or wildlife to levels that adversely affect public health, safety, or welfare; aquatic life; wildlife; or other designated beneficial uses;

(B) Levels of toxic substances shall not exceed the criteria listed in **Table 20** which were based on criteria established by EPA and published in **Quality Criteria for Water (1986)**, unless otherwise noted;

(C) The criteria in paragraph (B) of this subsection shall apply unless data from scientifically valid studies demonstrate that the most sensitive designated beneficial uses will not be adversely affected by exceeding a criterion or that a more restrictive criterion is warranted to protect beneficial uses, as accepted by the Department on a site specific basis. Where no published EPA criteria exist for a toxic substance, public health advisories and other published scientific literature may be considered and used, if appropriate, to set guidance values;

(D) Bio-assessment studies such as laboratory bioassays or instream measurements of indigenous biological communities, shall be conducted, as the Department deems necessary, to monitor the toxicity of complex effluents, other suspected discharges or chemical substances without numeric criteria, to aquatic life. These studies, properly conducted in accordance with standard testing procedures, may be considered as scientifically valid data for the purposes of paragraph (C) of this subsection. If toxicity occurs, the Department shall evaluate and implement measures necessary to reduce toxicity on a case-by-case basis.

(3) Where the naturally occurring quality parameters of waters of the Mid Coast Basin are outside the numerical limits of the above assigned water quality standards, the naturally occurring water quality shall be the standard. However, in such cases special restrictions, described in OAR 340-41-026(3)(a)(C)(iii),apply to discharges that affect dissolved oxygen.

(4) Mixing zones:

(a) The Department may allow a designated portion of a receiving water to serve as a zone of dilution for wastewaters and receiving waters to mix thoroughly and this zone will be defined as a mixing zone;

(b) The Department may suspend all or part of the water quality standards, or set less restrictive standards, in the defined mixing zone, provided that the following conditions are met:

(A) The water within the mixing zone shall be free of:

(i) Materials in concentrations that will cause acute toxicity to aquatic life as measured by a Department approved bioassay method. Acute toxicity is lethality to aquatic life as measured by a significant difference in lethal concentration between the control and 100 percent effluent in an acute bioassay test. Lethality in 100 percent effluent may be allowed due to ammonia and chlorine only when it is demonstrated on a case-by-case basis that immediate dilution of the effluent within the mixing zone reduces toxicity below lethal concentrations. The Department may on a case-by-case basis establish a zone of immediate dilution if appropriate for other parameters;

(ii) Materials that will settle to form objectionable deposits;

(iii) Floating debris, oil, scum, or other materials that cause nuisance conditions;

(iv) Substances in concentrations that produce deleterious amounts of fungal or bacterial growths.

(B) The water outside the boundary of the mixing zone shall:

(i) Be free of materials in concentrations that will cause chronic (sublethal) toxicity. Chronic toxicity is measured as the concentration that causes long-term sublethal effects, such as significantly impaired growth or reproduction in aquatic organisms, during a testing period based on test species life cycle. Procedures and end points will be specified by the Department in wastewater discharge permits;

(ii) Meet all other water quality standards under normal annual low flow conditions.

(c) The limits of the mixing zone shall be described in the wastewater discharge permit. In determining the location, surface area, and volume of a mixing zone area, the Department may use appropriate mixing zone guidelines to assess the biological, physical, and chemical character of receiving waters, and effluent, and the most appropriate placement of the outfall, to protect instream water quality, public health, and other beneficial uses. Based on receiving water and effluent characteristics, the Department shall define a mixing zone in the immediate area of a wastewater discharge to:

(A) Be as small as feasible;

(B) Avoid overlap with any other mixing zones to the extent possible and be less than the total stream width as necessary to allow passage of fish and other aquatic organisms;

(C) Minimize adverse effects on the indigenous biological community especially when species are present that warrant special protection for their economic importance, tribal significance, ecological uniqueness, or for other similar reasons as determined by the Department and does not block the free passage of aquatic life;

(D) Not threaten public health;

(E) Minimize adverse effects on other designated beneficial uses outside the mixing zone.

(d) The Department may request the applicant of a permitted discharge for which a mixing zone is required, to submit all information necessary to define a mixing zone, such as:

(A) Type of operation to be conducted;

(B) Characteristics of effluent flow rates and composition;

(C) Characteristics of low flows of receiving waters;

(D) Description of potential environmental effects;

(E) Proposed design for outfall structures.

(e) The Department may, as necessary, require mixing zone monitoring studies and/or bioassays to be conducted to evaluate water quality or biological status within and outside the mixing zone boundary;

(f) The Department may change mixing zone limits or require the relocation of an outfall if it determines that the water quality within the mixing zone adversely affects any existing beneficial uses in the receiving waters.

(g) **Alternate requirements for mixing zones**: For some existing or proposed discharges to some receiving streams, it may not be practicable to treat wastewater to meet instream water quality standards at the point of discharge or within a short distance from the point of discharge. Some of these discharges could be allowed without impairing the overall ecological integrity of the receiving streams, or may provide an overall benefit to the receiving stream. This section specifies the conditions and circumstances under which a mixing zone may be allowed by the Department that extends beyond the immediate area around a discharge point, or that extends across a stream width. An alternate mixing zone may be approved if the applicant demonstrates to the Department's satisfaction that the discharge (A) creates an overall environmental benefit, or (B) is to a constructed water course, or (C) is insignificant. The three circumstances under which alternate mixing zones may be established are described further below.

(A) **Overall environmental benefit.**

(i) Qualifying for alternate mixing zone based on overall environmental benefit: In order to qualify for an alternate mixing zone based on a finding of overall environmental benefit, the discharger must demonstrate to the Department's satisfaction the following:

(a) That all practical strategies have been or will be implemented to minimize the pollutant loads in the effluent; and

(b) For proposed increased discharges, the current actual discharge and mixing zone does

not meet the requirements of a standard mixing zone; and

(c) Either that, on balance, an environmental benefit would be lost if the discharge did not occur, or that the discharger is prepared to undertake other actions that will mitigate the effect of the discharge to an extent resulting in a net environmental benefit to the receiving stream.

(d) For the purposes of this rule, the term "practical" shall include environmental impact, availability of alternatives, cost of alternatives, and other relevant factors.

(ii) Studies required and evaluation of studies: In order to demonstrate that, on balance, an environmental benefit will result from the discharge, the following information shall be provided by the applicant:

(a) The effluent flow and pollutant loads that are detected or expected in the effluent, by month, both average and expected worst case discharges. The parameters to be evaluated include at a minimum temperature, biochemical oxygen demand, total suspended solids, total dissolved solids, pH, settleable solids, e. coli bacteria, oil and grease, any pollutants listed in Table 20 of this rule division, and any pollutant for which the receiving stream has been designated by the Department as water quality limited; and

(b) Receiving stream flow, by month; and

(c) The expected impact of the discharge, by month, on the receiving stream for the entire proposed mixing zone area for all of the pollutants listed above. Included in this analysis shall be a comparison of the receiving stream water quality with the discharge and without the discharge; and

(d) A description of fish, other vertebrate populations, and macroinvertebrates that reside in or are likely to pass through the proposed mixing zone, including expected location (if known), species identification, stage of development, and time of year when their presence is expected. For existing discharges, the applicant shall provide the same information for similar nearby streams that are unaffected by wastewater discharges. In addition, any threatened or endangered species in the immediate vicinity of the receiving stream shall be identified; and

(e) The expected impact of the discharge on aquatic organisms and/or fish passage, including any expected negative impacts from the effluent attracting fish where that is not desirable; and

(f) A description of the expected environmental benefits to be derived from the discharge or other mitigation measures proposed by the applicant, including but not limited to improvements in water quality, improvements in fish passage, and improvements in aquatic habitat. If the applicant proposes to undertake mitigation measures designed to provide environmental benefits (e.g., purchasing water or water conservation rights to increase stream flows or establishing stream cover to decrease temperature), the applicant shall describe the mitigation measures in detail, including a description of the steps it will take to ensure that the benefits of the mitigation measures are attained and are not lost or diminished over time.

(g) Some or all of the above study requirements may be waived by the Department, if the Department determines that the information is not needed. In the event that the Department does waive some or all of the above study requirements, the basis for waiving the requirements will be included in the permit evaluation report upon the next permit renewal or modification relating to the mixing zone.

(h) Upon request of the Department, the applicant shall conduct additional studies to further evaluate the impact of the discharge, which may include whole effluent toxicity testing, stream surveys for water quality, stream surveys for fish and other aquatic organisms, or other studies as specified by the Department.

(i) In evaluating whether an existing or proposed increase in an existing discharge would result in a net environmental benefit, the applicant shall use the native biological community in a nearby, similar stream that is unaffected by wastewater discharges. The Department shall consider all information generated as required in this rule and other relevant information. The evaluation shall consider benefits to the native aquatic biological community only.

(iii) Permit conditions: Upon determination by the Department that the discharge and mitigation measures (if any) will likely result in an overall environmental benefit, the Department shall include appropriate permit conditions to insure that the environmental benefits are attained and continue. Such permit conditions may include but not be limited to:

(a) Maximum allowed effluent flows and pollutant loads;

(b) Requirements to maintain land ownership, easements, contracts, or other legally binding measures necessary to assure that mitigation measures, if any, remain in place and effective;

(c) Special operating conditions;

(d) Monitoring and reporting requirements; and

(e) Studies to evaluate the effectiveness of mitigation measures.

(B) **Constructed water course**: A mixing zone may be extended through a constructed water course and into a natural water course. For the purposes of this rule, a constructed water course is one that was constructed for irrigation, site drainage, or wastewater conveyance, and has the following characteristics:

(i) Irrigation flows, stormwater runoff, or wastewater flows have replaced natural streamflow regimes; and

(ii) The channel form is greatly simplified in lengthwise and cross sectional profiles; and

(iii) Physical and biological characteristics that differ significantly from nearby natural streams; and

(iv) A much lower diversity of aquatic species than found in nearby natural streams; and

(v) If the constructed water course is an irrigation canal, then it must have effective fish screens in place to qualify as a constructed water course.

(C) **Insignificant discharges**: Insignificant discharges are those that either by volume, pollutant characteristics, and/or temporary nature are expected to have little if any impact on beneficial uses in the receiving stream, and for which the extensive evaluations required for discharges to smaller streams are not warranted. For the purposes of this rule, only filter backwash discharges and underground storage tank cleanups are considered insignificant discharges.

(D) **Other requirements for alternate mixing zones**: The following are additional requirements for dischargers requesting an alternate mixing zone:

(i) Most discharges that qualify for an alternate mixing zone will extend through the receiving stream until a larger stream is reached, where thorough mixing of the effluent can occur and where the edge of the allowed mixing zone will be located. The portion of the mixing zone in the larger stream must meet all of the requirements of the standard mixing zone, including not blocking aquatic life passage; and

(ii) An alternate mixing zone shall not be granted if a municipal drinking water intake is located within the proposed mixing zone, and the discharge has a significant adverse impact on the drinking water source; and

(iii) The discharge will not pose an unreasonable hazard to the environment or pose a significant health risk, considering the likely pathways of exposure; and

(iv) The discharge shall not be acutely toxic to organisms passing through the mixing zone; and

(v) An alternate mixing zone shall not be granted if the substances discharged may accumulate in the sediments or bioaccumulate in aquatic life or wildlife to levels that adversely affect public health, safety, or welfare; aquatic life; wildlife; or other designated beneficial uses; and

(vi) In the event that the receiving stream is water quality limited, the requirements for discharges to water quality limited streams supersede this rule.

(5) Testing methods: The analytical testing methods for determining compliance with the water quality standards contained in this rule shall be in accordance with the most recent edition of **Standard Methods for the Examination of Water and Waste Water published jointly by the American Public Health Association, American Water Works Association, and Water Pollution Control Federation,** unless the Department has published an applicable superseding method, in which case testing shall be in accordance with the superseding method; provided, however, that testing in accordance with an alternative method shall comply with this rule if the Department has published the method or has approved the method in writing.

[**Publications:** The publication(s) referred to or incorporated by reference in this rule are available from the office of the Department of Environmental Quality.]

Stat. Auth.: ORS 468B.035 & 468.735; ORS 468B.048
Stat. Implemented: ORS 468B.048
Hist.: DEQ 128, f. & ef. 1-21-77; DEQ 1-1980, f. & ef. 1-9-80; DEQ 18-1987, f. & ef. 9-4-87; DEQ 14-1991, f. & cert. ef. 8-13-91; DEQ 17-1992, f. & cert. ef. 8-7-92 (and corrected 8-13-92)

Minimum Design Criteria for Treatment and Control of Wastes

340-41-255 Subject to the implementation program set forth in OAR 340-41-120, prior to discharge of any wastes from any new or modified facility to any waters of the Mid Coast Basin, such wastes shall be treated and controlled in facilities designed in accordance with the following minimum criteria. (In designing treatment facilities, average conditions and a normal range of variability are generally used in establishing design criteria. A facility once completed and placed in operation should operate at or near the design limit most of the time, but may operate below the design criteria limit at times due to variables which are unpredictable or uncontrollable. This is particularly true for biological treatment facilities. The actual operating limits are intended to be established by permit pursuant to ORS 468.740 and recognize that the actual performance level may at times be less than the design criteria.):

(1) Sewage wastes:

(a) During periods of low stream flows (approximately May 1 to October 31): Treatment resulting in monthly average effluent concen-trations not to exceed 20 mg/l of BOD and 20 mg/l of SS, or equivalent control;

(b) During the period of high stream flows (approximately November 1 to April 30) and for direct ocean discharges: a minimum of secondary treatment or equivalent control, and unless otherwise specifically authorized by the Department, operation of all waste treatment and control facilities at maximum practicable efficiency and effectiveness so as to minimize waste discharges to public waters;

(c) Effluent BOD concentrations in mg/l, divided by the dilution factor (ratio of receiving stream flow to effluent flow) shall not exceed one unless otherwise approved by the EQC;

(d) Sewage wastes shall be disinfected, after treatment, equivalent to thorough mixing with sufficient chlorine to provide a residual of at least one part per million after 60 minutes of contact time unless otherwise specifically authorized by permit;

(e) Positive protection shall be provided to prevent bypassing raw or inadequately treated sewage to public waters unless otherwise approved by the Department where elimination of inflow and infiltration would be necessary but not presently practicable;

(f) More stringent waste treatment and control requirements may be imposed where special conditions may require.

(2) Industrial wastes:

(a) After maximum practicable inplant control, a minimum of secondary treatment or equivalent control (reduction of suspended solids and organic material where present in significant quantities, effective disinfection where bacterial organisms of public health significance are present, and control of toxic or other deleterious substances);

(b) Specific industrial waste treatment requirements shall be determined on an individual basis in accordance with the provisions of this plan, applicable federal requirements, and the following:

(A) The uses which are or may likely be made of the receiving stream;

(B) The size and nature of flow of the receiving stream;

(C) The quantity and quality of wastes to be treated; and

(D) The presence or absence of other sources of pollution on the same watershed.

(c) Where industrial, commercial, or agricul-tural effluents contain significant quantities of potentially toxic elements, treatment requirements shall be determined utilizing appropriate bioassays;

(d) Industrial cooling waters containing significant heat loads shall be subjected to offstream cooling or heat recovery prior to discharge to public waters;

(e) Positive protection shall be provided to prevent bypassing of raw or inadequately treated industrial wastes to any public waters;

(f) Facilities shall be provided to prevent and contain spills of potentially toxic or hazardous materials and a positive program for containment and cleanup of such spills should they occur shall be developed and maintained.

Stat. Auth.: ORS Ch. 468
Hist.: DEQ 128, f. & ef. 1-21-77

Special Policies and Guidelines

340-41-270 In order to preserve the existing high quality water in Clear Lake north of Florence for use as a public water supply source requiring only minimal filtration, it is the policy of the Environmental Quality Commission to protect the Clear Lake watershed including both surface and groundwaters, from existing and potential contamination sources with the following requirements:

(1) The total phosphorus maximum annual loading discharged into Clear Lake shall not exceed 241 pounds per year from all sources.

(2) The total phosphorus maximum annual loading for the Clear Lake watershed shall be deemed exceeded if the median concentration of total phosphorus from samples collected in the epilimnion between May 1 and September 30 exceed nine micrograms per liter during two consecutive years.

(3) Of the total phosphorus loading of 241 pounds per year specified in section (1) of this rule, 192 pounds per year shall be considered current background and Department reserve and shall not be available to other sources.

(4) The total phosphorus maximum annual loading discharged into Collard Lake shall not exceed 123 pounds per year.

(5) If water quality monitoring within the Clear Lake watershed indicates degradation, the Commission may require additional studies, corrective actions, or both, by rule. Such corrective actions may include but are not limited to the construction of sewage collection and off-site treatment and disposal facilities.

Stat. Auth.: ORS 183.335, 454.625, 468.020,, 468B.010 and 468B.020.
Stat. Implemented: ORS 454.685
Hist.: DEQ 3-1983, f. & ef. 4-18-83; DEQ 44-1990, f. & cert. ef. 12-19-90; DEQ 4-1997, f. & cert. ef. 03-07-1997.

Umpqua Basin

Beneficial Water Uses to be Protected

340-41-282 Water quality in the Umpqua River Basin (see **Figures 1** and **4**) shall be managed to protect the recognized beneficial uses as indicated in **Table 3**.

Stat. Auth.: ORS Ch. 468
Hist.: DEQ 128, f. & ef. 1-21-77; DEQ 9-1985, f. & ef. 8-6-85

Water Quality Standards Not to be Exceeded (To be Adopted Pursuant to ORS 468.735 and Enforceable Pursuant to ORS 468.720, 468.990, and 468.992)

340-41-285 (1) Notwithstanding the water quality standards contained below, the highest and best practicable treatment and/or control of wastes, activities, and flows shall in every case be provided so as to maintain dissolved oxygen and overall water quality at the highest possible levels and water temperatures, coliform bacteria concentrations, dissolved chemical substances, toxic materials, radioactivity, turbidities, color, odor, and other deleterious factors at the lowest possible levels.

(2) No wastes shall be discharged and no activities shall be conducted which either alone or in combination with other wastes or activities will cause violation of the following standards in the waters of the Umpqua River Basin:

(a) Dissolved oxygen (DO): The changes adopted by the Commission on January 11, 1996, become effective July 1, 1996. Until that time, the requirements of this rule that were in effect on January 10, 1996, apply:

(A) For waterbodies identified by the Department as providing salmonid spawning, during the periods from spawning until fry emergence from the gravels, the following criteria apply:

(i) The dissolved oxygen shall not be less than 11.0 mg/l. However, if the minimum intergravel dissolved oxygen, measured as a spatial median, is 8.0 mg/l or greater, then the DO criterion is 9.0 mg/l;

(ii) Where conditions of barometric pressure, altitude, and temperature preclude attainment of the 11.0 mg/l or 9.0 mg/l criteria, dissolved oxygen levels shall not be less than 95 percent of saturation.

(B) For waterbodies identified by the Department as providing salmonid spawning during the period from spawning until fry emergence from the gravels, the spatial median intergravel dissolved oxygen concentration shall not fall below 6.0 mg/l;

(C) A spatial median of 8.0 mg/l intergravel dissolved oxygen level shall be used to identify areas where the recognized beneficial use of salmonid spawning, egg incubation and fry emergence from the egg and from the gravels may be impaired and therefore require action by the Department. Upon determination that the spatial median intergravel dissolved oxygen concentration is below 8.0 mg/l, the Department may, in accordance with priorities established by the Department for evaluating water quality impaired waterbodies, determine whether to list the waterbody as water quality limited under the Section 303(d) of the Clean Water Act, initiate pollution control strategies as warranted, and where needed cooperate with appropriate designated management agencies to evaluate and implement necessary best management practices for nonpoint source pollution control;

(D) For waterbodies identified by the Department as providing cold-water aquatic life, the dissolved oxygen shall not be less than 8.0 mg/l as an absolute minimum. Where conditions of barometric pressure, altitude, and temperature preclude attainment of the 8.0 mg/l, dissolved oxygen shall not be less than 90 percent of saturation. At the discretion of the Department, when the Department determines that adequate information exists, the dissolved oxygen shall not fall below 8.0 mg/l as a 30-day mean minimum, 6.5 mg/l as a seven-day minimum mean, and shall not fall below 6.0 mg/l as an absolute minimum (**Table 21**);

(E) For waterbodies identified by the Department as providing cool-water aquatic life, the dissolved oxygen shall not be less than 6.5 mg/l as an absolute minimum. At the discretion of the Department, when the Department determines that adequate information exists, the dissolved oxygen shall not fall below 6.5 mg/l as a 30-day mean minimum, 5.0 mg/l as a seven-day minimum mean, and shall not fall below 4.0 mg/l as an absolute minimum (**Table 21**);

(F) For waterbodies identified by the Department as providing warm-water aquatic life, the dissolved oxygen shall not be less than 5.5 mg/l as an absolute minimum. At the discretion of the Department, when the Department determines that adequate information exists, the dissolved oxygen shall not fall below 5.5 mg/l as a 30-day mean minimum, and shall not fall below 4.0 mg/l as an absolute minimum (**Table 21**);

(G) For estuarine water, the dissolved oxygen concentrations shall not be less than 6.5 mg/l (for coastal waterbodies);

(H) For marine waters, no measurable reduction in dissolved oxygen concentration shall be allowed.

(b) Temperature: The changes adopted by the Commission on January 11, 1996, become effective July 1, 1996. Until that time, the requirements of this rule that were in effect on January 10, 1996, apply. The method for measuring the numeric temperature criteria specified in this rule is defined in OAR 340-41-006(54):

(A) To accomplish the goals identified in OAR 340-41-120(11), unless specifically allowed under a Department-approved surface water temperature management plan as required under OAR 340-41-026(3)(a)(D), no measurable surface water temperature increase resulting from anthropogenic activities is allowed:

(i) In a basin for which salmonid fish rearing is a designated beneficial use, and in which surface water temperatures exceed 64.0°F (17.8°C);

(ii) In waters and periods of the year determined by the Department to support native salmonid spawning, egg incubation, and fry emergence from the egg and from the gravels in a basin which exceeds 55.0°F (12.8°C);

(iii) In waters determined by the Department to support or to be necessary to maintain the viability of native Oregon bull trout, when surface water temperatures exceed 50.0°F (10.0°C);

(iv) In waters determined by the Department to be ecologically significant cold-water refugia;

(v) In stream segments containing federally listed Threatened and Endangered species if the increase would impair the biological integrity of the Threatened and Endangered population;

(vi) In Oregon waters when the dissolved oxygen (DO) levels are within 0.5 mg/l or 10 percent saturation of the water column or intergravel DO criterion for a given stream reach or subbasin;

(vii) In natural lakes.

(B) An exceedance of the numeric criteria identified in subparagraphs (A)(i) through (iii) of this subsection will not be deemed a temperature standard violation if it occurs when the air temperature during the warmest seven-day period of the year exceeds the 90th percentile of the seven-day average daily maximum air temperature calculated in a yearly series over the historic record. However, during such periods, the anthropogenic sources must still continue to comply with their surface water temperature management plans developed under OAR 340-41-026(3)(a)(D);

(C) Any source may petition the Commission for an exception to subparagraphs (A)(i) through (vii) of this subsection for discharge above the identified criteria if:

(i) The source provides the necessary scientific information to describe how the designated beneficial uses would not be adversely impacted; or

(ii) A source is implementing all reasonable management practices or measures; its activity will not significantly affect the beneficial uses; and the environmental cost of treating the parameter to the level necessary to assure full protection would outweigh the risk to the resource.

(D) Marine and estuarine waters: No significant increase above natural background temperatures shall be allowed, and water temperatures shall not be altered to a degree which creates or can reasonably be expected to create an adverse effect on fish or other aquatic life.

(c) Turbidity (Nephelometric Turbidity Units, NTU):

(A) No more than a ten percent cumulative increase in natural stream turbidities shall be allowed, as measured relative to a control point immediately upstream of the turbidity causing activity. However, limited duration activities necessary to address an emergency or to accommodate essential dredging, construction or other legitimate activities and which cause the standard to be exceeded may be authorized provided all practicable turbidity control techniques have been applied and one of the following has been granted:

(i) Emergency activities: Approval coordinated by DEQ with the Department of Fish and Wildlife under conditions they may prescribe to accommodate response to emergencies or to protect public health and welfare;

(ii) Dredging, Construction or other Legitimate Activities: Permit or certification authorized under terms of Section 401 or 404 (Permits and Licenses, Federal Water Pollution Control Act) or OAR 141-85-100 et seq. (Removal and Fill Permits, Division of State Lands), with limitations and conditions governing the activity set forth in the permit or certificate.

(B) When appropriate studies are completed by the Corps of Engineers, or others, the Environmental Quality Commission will, consistent with the provisions of ORS Chapter 468, modify the turbidity standard, on a case-by-case basis if necessary, to accommodate such specific water storage and development projects in the South Umpqua Basin as are found to be in the best overall interest of the public.

(d) pH (hydrogen ion concentration):

(A) Fresh waters (except Cascade lakes) and estuarine waters: pH values shall not fall outside the range of 6.5 to 8.5. The following exception applies: Waters impounded by dams existing on January 1, 1996, which have pHs that exceed the criteria shall not be considered in violation of the standard if the Department determines that the exceedance would not occur without the impoundment and that all practicable measures have been taken to bring the pH in the impounded waters into compliance with the criteria;

(B) Marine waters: pH values shall not fall outside the range of 7.0 to 8.5;

(C) Cascade lakes above 3,000 feet altitude: pH values shall not fall outside the range of 6.0 to 8.5.

(e) Bacteria standards:

(A) Numeric Criteria: Organisms of the coliform group commonly associated with fecal sources (MPN or equivalent membrane filtration using a representative number of samples) shall not exceed the criteria described in subparagraphs (i) and (ii) of this paragraph:

(i) Freshwaters and Estuarine Waters Other than Shellfish Growing Waters:

(I) A 30-day log mean of 126 *E. coli* organisms per 100 ml, based on a minimum of five (5) samples;

(II) No single sample shall exceed 406 *E. coli* organisms per 100 ml;

(ii) Marine Waters and Estuarine Shellfish Growing Waters: A fecal coliform median concentration of 14 organisms per 100 milliliters, with not more than ten percent of the samples exceeding 43 organisms per 100 ml.

(B) Raw Sewage Prohibition: No sewage shall be discharged into or in any other manner be allowed to enter the waters of the State unless such sewage has been treated in a manner approved by the Department or otherwise allowed by these rules;

(C) Animal Waste: Runoff contaminated with domesticated animal wastes shall be minimized and treated to the maximum extent practicable before it is allowed to enter waters of the State;

(D) Effluent Limitations and Water Quality Limited Waterbodies: Effluent limitations to implement the criteria in this rule are found in OAR 340-41-120(12) through (16). Implementation of the criteria in this rule in water quality limited waterbodies is described in OAR 340-41-026(3)(a)(I) and OAR 340-41-120(17).

(f) Bacterial pollution or other conditions deleterious to waters used for domestic purposes, livestock watering, irrigation, bathing, or shellfish propagation, or otherwise injurious to public health shall not be allowed;

(g) The liberation of dissolved gases, such as carbon dioxide, hydrogen sulfide, or other gases, in sufficient quantities to cause objectionable odors or to be deleterious to fish or other aquatic life, navigation, recreation, or other reasonable uses made of such waters shall not be allowed;

(h) The development of fungi or other growths having a deleterious effect on stream bottoms, fish or other aquatic life, or which are injurious to health, recreation, or industry shall not be allowed;

(i) The creation of tastes or odors or toxic or other conditions that are deleterious to fish or other aquatic life or affect the potability of drinking water or the palatability of fish or shellfish shall not be allowed;

(j) The formation of appreciable bottom or sludge deposits or the formation of any organic or inorganic deposits deleterious to fish or other aquatic life or injurious to public health, recreation, or industry shall not be allowed;

(k) Objectionable discoloration, scum, oily sleek or floating solids, or coating of aquatic life with oil films shall not be allowed;

(l) Aesthetic conditions offensive to the human senses of sight, taste, smell, or touch shall not be allowed;

(m) Radioisotope concentrations shall not exceed maximum permissible concentrations (MPC's) in drinking water, edible fishes or shellfishes, wildlife, irrigated crops, livestock and dairy products, or pose an external radiation hazard;

(n) The concentration of total dissolved gas relative to atmospheric pressure at the point of sample collection shall not exceed 110 percent of saturation, except when stream flow exceeds the ten-year, seven-day average flood. However, for Hatchery receiving waters and waters of

less than two feet in depth, the concentration of total dissolved gas relative to atmospheric pressure at the point of sample collection shall not exceed 105 percent of saturation;.

(o) Total Dissolved Solids: Guide concentrations listed below shall not be exceeded unless otherwise specifically authorized by DEQ upon such conditions as it may deem necessary to carry out the general intent of this plan and to protect the beneficial uses set forth in OAR 340-41-282: 500.0 mg/l;

(p) Toxic Substances:

(A) Toxic substances shall not be introduced above natural background levels in the waters of the state in amounts, concentrations, or combinations which may be harmful, may chemically change to harmful forms in the environment, or may accumulate in sediments or bioaccumulate in aquatic life or wildlife to levels that adversely affect public health, safety, or welfare; aquatic life; wildlife; or other designated beneficial uses;

(B) Levels of toxic substances shall not exceed the criteria listed in **Table 20** which were based on criteria established by EPA and published in **Quality Criteria for Water (1986)**, unless otherwise noted;

(C) The criteria in paragraph (B) of this subsection shall apply unless data from scientifically valid studies demonstrate that the most sensitive designated beneficial uses will not be adversely affected by exceeding a criterion or that a more restrictive criterion is warranted to protect beneficial uses, as accepted by the Department on a site specific basis. Where no published EPA criteria exist for a toxic substance, public health advisories and other published scientific literature may be considered and used, if appropriate, to set guidance values;

(D) Bio-assessment studies such as laboratory bioassays or instream measurements of indigenous biological communities, shall be conducted, as the Department deems necessary, to monitor the toxicity of complex effluents, other suspected discharges or chemical substances without numeric criteria, to aquatic life. These studies, properly conducted in accordance with standard testing procedures, may be considered as scientifically valid data for the purposes of paragraph (C) of this subsection. If toxicity occurs, the Department shall evaluate and implement measures necessary to reduce toxicity on a case-by-case basis.

(3) Where the naturally occurring quality parameters of waters of the Umpqua River Basin are outside the numerical limits of the above assigned water quality standards, the naturally occurring quality shall be the standard. However, in such cases special restrictions, described in OAR 340-41-026(3)(a)(C)(iii), apply to discharges that affect dissolved oxygen.

(4) Mixing zones:

(a) The Department may allow a designated portion of a receiving water to serve as a zone of dilution for wastewaters and receiving waters to mix thoroughly and this zone will be defined as a mixing zone;

(b) The Department may suspend all or part of the water quality standards, or set less restrictive standards, in the defined mixing zone, provided that the following conditions are met:

(A) The water within the mixing zone shall be free of:

(i) Materials in concentrations that will cause acute toxicity to aquatic life as measured by a Department approved bioassay method. Acute toxicity is lethality to aquatic life as measured by a significant difference in lethal concentration between the control and 100 percent effluent in an acute bioassay test. Lethality in 100 percent effluent may be allowed due to ammonia and chlorine only when it is demonstrated on a case-by-case basis that immediate dilution of the effluent within the mixing zone reduces toxicity below lethal concentrations. The Department may on a case-by-case basis establish a zone of immediate dilution if appropriate for other parameters;

(ii) Materials that will settle to form objectionable deposits;

(iii) Floating debris, oil, scum, or other materials that cause nuisance conditions;

(iv) Substances in concentrations that produce deleterious amounts of fungal or bacterial growths.

(B) The water outside the boundary of the mixing zone shall:

(i) Be free of materials in concentrations that will cause chronic (sublethal) toxicity. Chronic toxicity is measured as the concentration that causes long-term sublethal effects, such as significantly impaired growth or reproduction in aquatic organisms, during a testing period based on test species life cycle. Procedures and end points will be specified by the Department in wastewater discharge permits;

(ii) Meet all other water quality standards under normal annual low flow conditions.

(c) The limits of the mixing zone shall be described in the wastewater discharge permit. In determining the location, surface area, and volume of a mixing zone area, the Department may use appropriate mixing zone guidelines to assess the biological, physical, and chemical character of receiving waters, and effluent, and the most appropriate placement of the outfall, to protect instream water quality, public health, and other beneficial uses. Based on receiving water and effluent characteristics, the Department shall define a mixing zone in the immediate area of a wastewater discharge to:

(A) Be as small as feasible;

(B) Avoid overlap with any other mixing zones to the extent possible and be less than the total stream width as necessary to allow passage of fish and other aquatic organisms;

(C) Minimize adverse effects on the indigenous biological community especially when species are present that warrant special protection for their economic importance, tribal significance, ecological uniqueness, or for other similar reasons as determined by the Department and does not block the free passage of aquatic life;

(D) Not threaten public health;

(E) Minimize adverse effects on other designated beneficial uses outside the mixing zone.

(d) The Department may request the applicant of a permitted discharge for which a mixing zone is required, to submit all information necessary to define a mixing zone, such as:

(A) Type of operation to be conducted;

(B) Characteristics of effluent flow rates and composition;

(C) Characteristics of low flows of receiving waters;

(D) Description of potential environmental effects;

(E) Proposed design for outfall structures.

(e) The Department may, as necessary, require mixing zone monitoring studies and/or bioassays to be conducted to evaluate water quality or biological status within and outside the mixing zone boundary;

(f) The Department may change mixing zone limits or require the relocation of an outfall if it determines that the water quality within the mixing zone adversely affects any existing beneficial uses in the receiving waters.

(g) **Alternate requirements for mixing zones**: For some existing or proposed discharges to some receiving streams, it may not be practicable to treat wastewater to meet instream water quality standards at the point of discharge or within a short distance from the point of discharge. Some of these discharges could be allowed without impairing the overall ecological integrity of the receiving streams, or may provide an overall benefit to the receiving stream. This section specifies the conditions and circumstances under which a mixing zone may be allowed by the Department that extends beyond the immediate area around a discharge point, or that extends across a stream width. An alternate mixing zone may be approved if the applicant

demonstrates to the Department's satisfaction that the discharge (A) creates an overall environmental benefit, or (B) is to a constructed water course, or (C) is insignificant. The three circumstances under which alternate mixing zones may be established are described further below.

(A) **Overall environmental benefit**.

(i) Qualifying for alternate mixing zone based on overall environmental benefit: In order to qualify for an alternate mixing zone based on a finding of overall environmental benefit, the discharger must demonstrate to the Department's satisfaction the following:

(a) That all practical strategies have been or will be implemented to minimize the pollutant loads in the effluent; and

(b) For proposed increased discharges, the current actual discharge and mixing zone does not meet the requirements of a standard mixing zone; and

(c) Either that, on balance, an environmental benefit would be lost if the discharge did not occur, or that the discharger is prepared to undertake other actions that will mitigate the effect of the discharge to an extent resulting in a net environmental benefit to the receiving stream.

(d) For the purposes of this rule, the term "practical" shall include environmental impact, availability of alternatives, cost of alternatives, and other relevant factors.

(ii) Studies required and evaluation of studies: In order to demonstrate that, on balance, an environmental benefit will result from the discharge, the following information shall be provided by the applicant:

(a) The effluent flow and pollutant loads that are detected or expected in the effluent, by month, both average and expected worst case discharges. The parameters to be evaluated include at a minimum temperature, biochemical oxygen demand, total suspended solids, total dissolved solids, pH, settleable solids, e. coli bacteria, oil and grease, any pollutants listed in Table 20 of this rule division, and any pollutant for which the receiving stream has been designated by the Department as water quality limited; and

(b) Receiving stream flow, by month; and

(c) The expected impact of the discharge, by month, on the receiving stream for the entire proposed mixing zone area for all of the pollutants listed above. Included in this analysis shall be a comparison of the receiving stream water quality with the discharge and without the discharge; and

(d) A description of fish, other vertebrate populations, and macroinvertebrates that reside in or are likely to pass through the proposed mixing zone, including expected location (if known), species identification, stage of development, and time of year when their presence is expected. For existing discharges, the applicant shall provide the same information for similar nearby streams that are unaffected by wastewater discharges. In addition, any threatened or endangered species in the immediate vicinity of the receiving stream shall be identified; and

(e) The expected impact of the discharge on aquatic organisms and/or fish passage, including any expected negative impacts from the effluent attracting fish where that is not desirable; and

(f) A description of the expected environmental benefits to be derived from the discharge or other mitigation measures proposed by the applicant, including but not limited to improvements in water quality, improvements in fish passage, and improvements in aquatic habitat. If the applicant proposes to undertake mitigation measures designed to provide environmental benefits (e.g., purchasing water or water conservation rights to increase stream flows or establishing stream cover to decrease temperature), the applicant shall describe the

mitigation measures in detail, including a description of the steps it will take to ensure that the benefits of the mitigation measures are attained and are not lost or diminished over time.

(g) Some or all of the above study requirements may be waived by the Department, if the Department determines that the information is not needed. In the event that the Department does waive some or all of the above study requirements, the basis for waiving the requirements will be included in the permit evaluation report upon the next permit renewal or modification relating to the mixing zone.

(h) Upon request of the Department, the applicant shall conduct additional studies to further evaluate the impact of the discharge, which may include whole effluent toxicity testing, stream surveys for water quality, stream surveys for fish and other aquatic organisms, or other studies as specified by the Department.

(i) In evaluating whether an existing or proposed increase in an existing discharge would result in a net environmental benefit, the applicant shall use the native biological community in a nearby, similar stream that is unaffected by wastewater discharges. The Department shall consider all information generated as required in this rule and other relevant information. The evaluation shall consider benefits to the native aquatic biological community only.

(iii) Permit conditions: Upon determination by the Department that the discharge and mitigation measures (if any) will likely result in an overall environmental benefit, the Department shall include appropriate permit conditions to insure that the environmental benefits are attained and continue. Such permit conditions may include but not be limited to:

(a) Maximum allowed effluent flows and pollutant loads;

(b) Requirements to maintain land ownership, easements, contracts, or other legally binding measures necessary to assure that mitigation measures, if any, remain in place and effective;

(c) Special operating conditions;

(d) Monitoring and reporting requirements; and

(e) Studies to evaluate the effectiveness of mitigation measures.

(B) **Constructed water course**: A mixing zone may be extended through a constructed water course and into a natural water course. For the purposes of this rule, a constructed water course is one that was constructed for irrigation, site drainage, or wastewater conveyance, and has the following characteristics:

(i) Irrigation flows, stormwater runoff, or wastewater flows have replaced natural streamflow regimes; and

(ii) The channel form is greatly simplified in lengthwise and cross sectional profiles; and

(iii) Physical and biological characteristics that differ significantly from nearby natural streams; and

(iv) A much lower diversity of aquatic species than found in nearby natural streams; and

(v) If the constructed water course is an irrigation canal, then it must have effective fish screens in place to qualify as a constructed water course.

(C) **Insignificant discharges**: Insignificant discharges are those that either by volume, pollutant characteristics, and/or temporary nature are expected to have little if any impact on beneficial uses in the receiving stream, and for which the extensive evaluations required for discharges to smaller streams are not warranted. For the purposes of this rule, only filter backwash discharges and underground storage tank cleanups are considered insignificant discharges.

(D) **Other requirements for alternate mixing zones**: The following are additional

requirements for dischargers requesting an alternate mixing zone:

(i) Most discharges that qualify for an alternate mixing zone will extend through the receiving stream until a larger stream is reached, where thorough mixing of the effluent can occur and where the edge of the allowed mixing zone will be located. The portion of the mixing zone in the larger stream must meet all of the requirements of the standard mixing zone, including not blocking aquatic life passage; and

(ii) An alternate mixing zone shall not be granted if a municipal drinking water intake is located within the proposed mixing zone, and the discharge has a significant adverse impact on the drinking water source; and

(iii) The discharge will not pose an unreasonable hazard to the environment or pose a significant health risk, considering the likely pathways of exposure; and

(iv) The discharge shall not be acutely toxic to organisms passing through the mixing zone; and

(v) An alternate mixing zone shall not be granted if the substances discharged may accumulate in the sediments or bioaccumulate in aquatic life or wildlife to levels that adversely affect public health, safety, or welfare; aquatic life; wildlife; or other designated beneficial uses; and

(vi) In the event that the receiving stream is water quality limited, the requirements for discharges to water quality limited streams supersede this rule.

(5) Testing methods: The analytical testing methods for determining compliance with the water quality standards contained in this rule shall be in accordance with the most recent edition of **Standard Methods for the Examination of Water and Waste Water published jointly by the American Public Health Association, American Water Works Association, and Water Pollution Control Federation,** unless the Department has published an applicable superseding method, in which case testing shall be in accordance with the superseding method; provided, however, that testing in accordance with an alternative method shall comply with this rule if the Department has published the method or has approved the method in writing.

[**Publications:** The publication(s) referred to or incorporated by reference in this rule are available from the office of the Department of Environmental Quality.]

Stat. Auth.: ORS 468B.035 & 468.735; ORS 468B.048
Stat. Implemented: ORS 468B.048
Hist.: DEQ 128, f. & ef. 1-21-77; DEQ 1-1980, f. & ef. 1-9-80; DEQ 18-1987, f. & ef. 9-4-87; DEQ 14-1991, f. & cert. ef. 8-13-91; DEQ 17-1992, f. & cert. ef. 8-7-92 (and corrected 8-13-92)

Minimum Design Criteria for Treatment and Control of Wastes

340-41-295 Subject to the implementation program set forth in OAR 340-41-120, prior to discharge of any wastes from any new or modified facility to any waters of the Umpqua River Basin, such wastes shall be treated and controlled in facilities designed in accordance with the following minimum criteria. (In designing treatment facilities, average conditions and a normal range of variability are generally used in establishing design criteria. A facility once completed and placed in operation should operate at or near the design limit most of the time but may operate below the design criteria limit at times due to variables which are unpredictable or uncontrollable. This is particularly true for biological treatment facilities. The actual operating limits are intended to be established by permit pursuant to ORS 468.740 and recognize that the actual performance

level may at times be less than the design criteria.):

(1) Sewage wastes:

(a) During periods of low stream flows (approximately May 1 to October 31):

(A) Main stem Umpqua River, South Umpqua River, and all tributaries to the main stem and South Umpqua Rivers: Treatment resulting in monthly average effluent concentrations not to exceed 10 mg/l of BOD and 10 mg/l of SS or equivalent control;

(B) North Umpqua River from mouth to Idleyld Park (river mile 0 to 35): Treatment resulting in monthly average effluent concentrations not to exceed 10 mg/l of BOD and 10 mg/l of SS or equivalent control;

(C) North Umpqua River above Idleyld Park (river mile 35) and all tributaries to North Umpqua River: Treatment resulting in monthly average effluent concentrations not to exceed 5 mg/l of BOD and 5 mg/l of SS or equivalent control.

(b) During the period of high stream flows (approximately November 1 to April 30): A minimum of secondary treatment or equivalent control and unless otherwise specifically authorized by the Department, operation of all waste treatment and control facilities at maximum practicable efficiency and effectiveness so as to minimize waste discharges to public waters;

(c) Effluent BOD concentrations in mg/l, divided by the dilution factor (ratio of receiving stream flow to effluent flow) shall not exceed one unless otherwise approved by the EQC;

(d) Sewage wastes shall be disinfected, after treatment, equivalent to thorough mixing with sufficient chlorine to provide a residual of at least one part per million after 60 minutes of contact time unless otherwise specifically authorized by permit;

(e) Positive protection shall be provided to prevent bypassing raw or inadequately treated sewage to public waters unless otherwise approved by the Department where elimination of inflow and infiltration would be necessary but not presently practicable;

(f) More stringent waste treatment and control requirements may be imposed where special conditions may require.

(2) Industrial wastes:

(a) After maximum practicable inplant control, a minimum of secondary treatment or equivalent control (reduction of suspended solids and organic material where present in significant quantities, effective disinfection where bacterial organisms of public health significance are present, and control of toxic or other deleterious substances);

(b) Specific industrial waste treatment requirements shall be determined on an individual basis in accordance with the provisions of this plan, applicable federal requirements, and the following:

(A) The uses which are or may likely be made of the receiving stream;

(B) The size and nature of flow of the receiving stream;

(C) The quantity and quality of wastes to be treated; and

(D) The presence or absence of other sources of pollution on the same watershed.

(c) Where industrial, commercial, or agricul-tural effluents contain significant quantities of potentially toxic elements, treatment requirements shall be determined utilizing appropriate bioassays;

(d) Industrial cooling waters containing significant heat loads shall be subjected to offstream cooling or heat recovery prior to discharge to public waters;

(e) Positive protection shall be provided to prevent bypassing of raw or inadequately treated industrial wastes to any public waters;

(f) Facilities shall be provided to prevent and contain spills of potentially toxic or hazardous

materials and a positive program for containment and cleanup of such spills should they occur shall be developed and maintained.

Stat. Auth.: ORS Ch. 468
Hist.: DEQ 128, f. & ef. 1-21-77

South Coast Basin

Beneficial Water Uses to be Protected

340-41-322 Water quality in the South Coast Basin (see **Figures 1** and **5**) shall be managed to protect the recognized beneficial uses as indicated in **Table 4**.

Stat. Auth.: ORS Ch. 468
Hist.: DEQ 128, f. & ef. 1-21-77; DEQ 9-1985, f. & ef. 8-6-85

Water Quality Standards Not to be Exceeded (To be Adopted Pursuant to ORS 468.735 and Enforceable Pursuant to ORS 468.720, 468.990, and 468.992)

340-41-325 (1) Notwithstanding the water quality standards contained below, the highest and best practicable treatment and/or control of wastes, activities, and flows shall in every case be provided so as to maintain dissolved oxygen and overall water quality at the highest possible levels and water temperatures, coliform bacteria concentrations, dissolved chemical substances, toxic materials, radioactivity, turbidities, color, odor, and other deleterious factors at the lowest possible levels.

(2) No wastes shall be discharged and no activities shall be conducted which either alone or in combination with other wastes or activities will cause violation of the following standards in the waters of the South Coast Basin:

(a) Dissolved oxygen (DO): The changes adopted by the Commission on January 11, 1996, become effective July 1, 1996. Until that time, the requirements of this rule that were in effect on January 10, 1996, apply:

(A) For waterbodies identified by the Department as providing salmonid spawning, during the periods from spawning until fry emergence from the gravels, the following criteria apply:

(i) The dissolved oxygen shall not be less than 11.0 mg/l. However, if the minimum intergravel dissolved oxygen, measured as a spatial median, is 8.0 mg/l or greater, then the DO criterion is 9.0 mg/l;

(ii) Where conditions of barometric pressure, altitude, and temperature preclude attainment of the 11.0 mg/l or 9.0 mg/l criteria, dissolved oxygen levels shall not be less than 95 percent of saturation.

(B) For waterbodies identified by the Department as providing salmonid spawning during the period from spawning until fry emergence from the gravels, the spatial median intergravel dissolved oxygen concentration shall not fall below 6.0 mg/l;

(C) A spatial median of 8.0 mg/l intergravel dissolved oxygen level shall be used to identify areas where the recognized beneficial use of salmonid spawning, egg incubation and fry emergence from the egg and from the gravels may be impaired and therefore require action by the Department. Upon determination that the spatial median intergravel dissolved oxygen concentration is below 8.0 mg/l, the Department may, in accordance with priorities established by the Department for evaluating water quality impaired waterbodies, determine whether to list the waterbody as water quality limited under the Section 303(d) of the Clean Water Act, initiate

pollution control strategies as warranted, and where needed cooperate with appropriate designated management agencies to evaluate and implement necessary best management practices for nonpoint source pollution control;

(D) For waterbodies identified by the Department as providing cold-water aquatic life, the dissolved oxygen shall not be less than 8.0 mg/l as an absolute minimum. Where conditions of barometric pressure, altitude, and temperature preclude attainment of the 8.0 mg/l, dissolved oxygen shall not be less than 90 percent of saturation. At the discretion of the Department, when the Department determines that adequate information exists, the dissolved oxygen shall not fall below 8.0 mg/l as a 30-day mean minimum, 6.5 mg/l as a seven-day minimum mean, and shall not fall below 6.0 mg/l as an absolute minimum (**Table 21**);

(E) For waterbodies identified by the Department as providing cool-water aquatic life, the dissolved oxygen shall not be less than 6.5 mg/l as an absolute minimum. At the discretion of the Department, when the Department determines that adequate information exists, the dissolved oxygen shall not fall below 6.5 mg/l as a 30-day mean minimum, 5.0 mg/l as a seven-day minimum mean, and shall not fall below 4.0 mg/l as an absolute minimum (**Table 21**);

(F) For waterbodies identified by the Department as providing warm-water aquatic life, the dissolved oxygen shall not be less than 5.5 mg/l as an absolute minimum. At the discretion of the Department, when the Department determines that adequate information exists, the dissolved oxygen shall not fall below 5.5 mg/l as a 30-day mean minimum, and shall not fall below 4.0 mg/l as an absolute minimum (**Table 21**);

(G) For estuarine water, the dissolved oxygen concentrations shall not be less than 6.5 mg/l (for coastal waterbodies);

(H) For marine waters, no measurable reduction in dissolved oxygen concentration shall be allowed.

(b) Temperature: The changes adopted by the Commission on January 11, 1996, become effective July 1, 1996. Until that time, the requirements of this rule that were in effect on January 10, 1996, apply. The method for measuring the numeric temperature criteria specified in this rule is defined in OAR 340-41-006(54):

(A) To accomplish the goals identified in OAR 340-41-120(11), unless specifically allowed under a Department-approved surface water temperature management plan as required under OAR 340-41-026(3)(a)(D), no measurable surface water temperature increase resulting from anthropogenic activities is allowed:

(i) In a basin for which salmonid fish rearing is a designated beneficial use, and in which surface water temperatures exceed 64.0°F (17.8°C);

(ii) In waters and periods of the year determined by the Department to support native salmonid spawning, egg incubation, and fry emergence from the egg and from the gravels in a basin which exceeds 55.0°F (12.8°C);

(iii) In waters determined by the Department to support or to be necessary to maintain the viability of native Oregon bull trout, when surface water temperatures exceed 50.0°F (10.0°C);

(iv) In waters determined by the Department to be ecologically significant cold-water refugia;

(v) In stream segments containing federally listed Threatened and Endangered species if the increase would impair the biological integrity of the Threatened and Endangered population;

(vi) In Oregon waters when the dissolved oxygen (DO) levels are within 0.5 mg/l or 10 percent saturation of the water column or intergravel DO criterion for a given stream reach or subbasin;

(vii) In natural lakes.

(B) An exceedance of the numeric criteria identified in subparagraphs (A)(i) through (iii) of this subsection will not be deemed a temperature standard violation if it occurs when the air temperature during the warmest seven-day period of the year exceeds the 90th percentile of the seven-day average daily maximum air temperature calculated in a yearly series over the historic record. However, during such periods, the anthropogenic sources must still continue to comply with their surface water temperature management plans developed under OAR 340-41-026(3)(a)(D);

(C) Any source may petition the Commission for an exception to subparagraphs (A)(i) through (vii) of this subsection for discharge above the identified criteria if:

(i) The source provides the necessary scientific information to describe how the designated beneficial uses would not be adversely impacted; or

(ii) A source is implementing all reasonable management practices or measures; its activity will not significantly affect the beneficial uses; and the environmental cost of treating the parameter to the level necessary to assure full protection would outweigh the risk to the resource.

(D) Marine and estuarine waters: No significant increase above natural background temperatures shall be allowed, and water temperatures shall not be altered to a degree which creates or can reasonably be expected to create an adverse effect on fish or other aquatic life.

(c) Turbidity (Nephelometric Turbidity Units, NTU): No more than a ten percent cumulative increase in natural stream turbidities shall be allowed, as measured relative to a control point immediately upstream of the turbidity causing activity. However, limited duration activities necessary to address an emergency or to accommodate essential dredging, construction or other legitimate activities and which cause the standard to be exceeded may be authorized provided all practicable turbidity control techniques have been applied and one of the following has been granted:

(A) Emergency activities: Approval coordinated by DEQ with the Department of Fish and Wildlife under conditions they may prescribe to accommodate response to emergencies or to protect public health and welfare;

(B) Dredging, Construction or other Legitimate Activities: Permit or certification authorized under terms of Section 401 or 404 (Permits and Licenses, Federal Water Pollution Control Act) or OAR 141-85-100 et seq. (Removal and Fill Permits, Division of State Lands), with limitations and conditions governing the activity set forth in the permit or certificate.

(d) pH (Hydrogen ion concentration): pH values shall not fall outside the range of:

(A) Estuarine and fresh waters: 6.5 - 8.5. The following exception applies: Waters impounded by dams existing on January 1, 1996, which have pHs that exceed the criteria shall not be considered in violation of the standard if the Department determines that the exceedance would not occur without the impoundment and that all practicable measures have been taken to bring the pH in the impounded waters into compliance with the criteria;

(B) Marine waters: 7.0 - 8.5.

(e) Bacteria standards:

(A) Numeric Criteria: Organisms of the coliform group commonly associated with fecal sources (MPN or equivalent membrane filtration using a representative number of samples) shall not exceed the criteria described in subparagraphs (i) and (ii) of this paragraph:

(i) Freshwaters and Estuarine Waters Other than Shellfish Growing Waters:

(I) A 30-day log mean of 126 *E. coli* organisms per 100 ml, based on a minimum of five (5) samples;

(II) No single sample shall exceed 406 *E. coli* organisms per 100 ml;

(ii) Marine Waters and Estuarine Shellfish Growing Waters: A fecal coliform median concentration of 14 organisms per 100 milliliters, with not more than ten percent of the samples exceeding 43 organisms per 100 ml.

(B) Raw Sewage Prohibition: No sewage shall be discharged into or in any other manner be allowed to enter the waters of the State unless such sewage has been treated in a manner approved by the Department or otherwise allowed by these rules;

(C) Animal Waste: Runoff contaminated with domesticated animal wastes shall be minimized and treated to the maximum extent practicable before it is allowed to enter waters of the State;

(D) Effluent Limitations and Water Quality Limited Waterbodies: Effluent limitations to implement the criteria in this rule are found in OAR 340-41-120(12) - (16). Implementation of the criteria in this rule in water quality limited waterbodies is described in OAR 340-41-026(3)(a)(I) and OAR 340-41-120(17).

(f) Bacterial pollution or other conditions deleterious to waters used for domestic purposes, livestock watering, irrigation, bathing, or shellfish propagation, or otherwise injurious to public health shall not be allowed;

(g) The liberation of dissolved gases, such as carbon dioxide, hydrogen sulfide, or other gases, in sufficient quantities to cause objectionable odors or to be deleterious to fish or other aquatic life, navigation, recreation, or other reasonable uses made of such waters shall not be allowed;

(h) The development of fungi or other growths having a deleterious effect on stream bottoms, fish or other aquatic life, or which are injurious to health, recreation, or industry shall not be allowed;

(i) The creation of tastes or odors or toxic or other conditions that are deleterious to fish or other aquatic life or affect the potability of drinking water or the palatability of fish or shellfish shall not be allowed;

(j) The formation of appreciable bottom or sludge deposits or the formation of any organic or inorganic deposits deleterious to fish or other aquatic life or injurious to public health, recreation, or industry shall not be allowed;

(k) Objectionable discoloration, scum, oily sleek or floating solids, or coating of aquatic life with oil films shall not be allowed;

(l) Aesthetic conditions offensive to the human senses of sight, taste, smell, or touch shall not be allowed;

(m) Radioisotope concentrations shall not exceed maximum permissible concentrations (MPC's) in drinking water, edible fishes or shellfishes, wildlife, irrigated crops, livestock and dairy products, or pose an external radiation hazard;

(n) The concentration of total dissolved gas relative to atmospheric pressure at the point of sample collection shall not exceed 110 percent of saturation, except when stream flow exceeds the ten-year, seven-day average flood. However, for Hatchery receiving waters and waters of less than two feet in depth, the concentration of total dissolved gas relative to atmospheric pressure at the point of sample collection shall not exceed 105 percent of saturation;

(o) Total Dissolved Solids: Guide concentrations listed below shall not be exceeded unless otherwise specifically authorized by DEQ upon such conditions as it may deem necessary to carry out the general intent of this plan and to protect the beneficial uses set forth in OAR 340-41-322: 100.0 mg/l;

(p) Toxic Substances:

(A) Toxic substances shall not be introduced above natural background levels in the waters of the state in amounts, concentrations, or combinations which may be harmful, may

chemically change to harmful forms in the environment, or may accumulate in sediments or bioaccumulate in aquatic life or wildlife to levels that adversely affect public health, safety, or welfare; aquatic life; wildlife; or other designated beneficial uses;

(B) Levels of toxic substances shall not exceed the criteria listed in **Table 20** which were based on criteria established by EPA and published in **Quality Criteria for Water (1986)**, unless otherwise noted;

(C) The criteria in paragraph (B) of this subsection shall apply unless data from scientifically valid studies demonstrate that the most sensitive designated beneficial uses will not be adversely affected by exceeding a criterion or that a more restrictive criterion is warranted to protect beneficial uses, as accepted by the Department on a site specific basis. Where no published EPA criteria exist for a toxic substance, public health advisories and other published scientific literature may be considered and used, if appropriate, to set guidance values;

(D) Bio-assessment studies such as laboratory bioassays or instream measurements of indigenous biological communities, shall be conducted, as the Department deems necessary, to monitor the toxicity of complex effluents, other suspected discharges or chemical substances without numeric criteria, to aquatic life. These studies, properly conducted in accordance with standard testing procedures, may be considered as scientifically valid data for the purposes of paragraph (C) of this subsection. If toxicity occurs, the Department shall evaluate and implement measures necessary to reduce toxicity on a case-by-case basis.

(3) Where the naturally occurring quality parameters of waters of the South Coast Basin are outside the numerical limits of the above assigned water quality standards, the naturally occurring water quality shall be the standard. However, in such cases special restrictions, described in OAR 340-41-026(3)(a)(C)(iii), apply to discharges that affect dissolved oxygen.

(4) Mixing zones:

(a) The Department may allow a designated portion of a receiving water to serve as a zone of dilution for wastewaters and receiving waters to mix thoroughly and this zone will be defined as a mixing zone;

(b) The Department may suspend all or part of the water quality standards, or set less restrictive standards, in the defined mixing zone, provided that the following conditions are met:

(A) The water within the mixing zone shall be free of:

(i) Materials in concentrations that will cause acute toxicity to aquatic life as measured by a Department approved bioassay method. Acute toxicity is lethality to aquatic life as measured by a significant difference in lethal concentration between the control and 100 percent effluent in an acute bioassay test. Lethality in 100 percent effluent may be allowed due to ammonia and chlorine only when it is demonstrated on a case-by-case basis that immediate dilution of the effluent within the mixing zone reduces toxicity below lethal concentrations. The Department may on a case-by-case basis establish a zone of immediate dilution if appropriate for other parameters;

(ii) Materials that will settle to form objectionable deposits;

(iii) Floating debris, oil, scum, or other materials that cause nuisance conditions;

(iv) Substances in concentrations that produce deleterious amounts of fungal or bacterial growths.

(B) The water outside the boundary of the mixing zone shall:

(i) Be free of materials in concentrations that will cause chronic (sublethal) toxicity. Chronic toxicity is measured as the concentration that causes long-term sublethal effects, such as significantly impaired growth or reproduction in aquatic organisms, during a testing period based on test species life cycle. Procedures and end points will be specified by the Department in wastewater discharge permits;

(ii) Meet all other water quality standards under normal annual low flow conditions.

(c) The limits of the mixing zone shall be described in the wastewater discharge permit. In determining the location, surface area, and volume of a mixing zone area, the Department may use appropriate mixing zone guidelines to assess the biological, physical, and chemical character of receiving waters, and effluent, and the most appropriate placement of the outfall, to protect instream water quality, public health, and other beneficial uses. Based on receiving water and effluent characteristics, the Department shall define a mixing zone in the immediate area of a wastewater discharge to:

(A) Be as small as feasible;

(B) Avoid overlap with any other mixing zones to the extent possible and be less than the total stream width as necessary to allow passage of fish and other aquatic organisms;

(C) Minimize adverse effects on the indigenous biological community especially when species are present that warrant special protection for their economic importance, tribal significance, ecological uniqueness, or for other similar reasons as determined by the Department and does not block the free passage of aquatic life;

(D) Not threaten public health;

(E) Minimize adverse effects on other designated beneficial uses outside the mixing zone.

(d) The Department may request the applicant of a permitted discharge for which a mixing zone is required, to submit all information necessary to define a mixing zone, such as:

(A) Type of operation to be conducted;

(B) Characteristics of effluent flow rates and composition;

(C) Characteristics of low flows of receiving waters;

(D) Description of potential environmental effects;

(E) Proposed design for outfall structures.

(e) The Department may, as necessary, require mixing zone monitoring studies and/or bioassays to be conducted to evaluate water quality or biological status within and outside the mixing zone boundary;

(f) The Department may change mixing zone limits or require the relocation of an outfall if it determines that the water quality within the mixing zone adversely affects any existing beneficial uses in the receiving waters.

(g) **Alternate requirements for mixing zones**: For some existing or proposed discharges to some receiving streams, it may not be practicable to treat wastewater to meet instream water quality standards at the point of discharge or within a short distance from the point of discharge. Some of these discharges could be allowed without impairing the overall ecological integrity of the receiving streams, or may provide an overall benefit to the receiving stream. This section specifies the conditions and circumstances under which a mixing zone may be allowed by the Department that extends beyond the immediate area around a discharge point, or that extends across a stream width. An alternate mixing zone may be approved if the applicant demonstrates to the Department's satisfaction that the discharge (A) creates an overall environmental benefit, or (B) is to a constructed water course, or (C) is insignificant. The three circumstances under which alternate mixing zones may be established are described further below.

(A) **Overall environmental benefit**.

(i) Qualifying for alternate mixing zone based on overall environmental benefit: In order to qualify for an alternate mixing zone based on a finding of overall environmental benefit, the discharger must demonstrate to the Department's satisfaction the following:

(a) That all practical strategies have been or will be implemented to minimize the

pollutant loads in the effluent; and

(b) For proposed increased discharges, the current actual discharge and mixing zone does not meet the requirements of a standard mixing zone; and

(c) Either that, on balance, an environmental benefit would be lost if the discharge did not occur, or that the discharger is prepared to undertake other actions that will mitigate the effect of the discharge to an extent resulting in a net environmental benefit to the receiving stream.

(d) For the purposes of this rule, the term "practical" shall include environmental impact, availability of alternatives, cost of alternatives, and other relevant factors.

(ii) Studies required and evaluation of studies: In order to demonstrate that, on balance, an environmental benefit will result from the discharge, the following information shall be provided by the applicant:

(a) The effluent flow and pollutant loads that are detected or expected in the effluent, by month, both average and expected worst case discharges. The parameters to be evaluated include at a minimum temperature, biochemical oxygen demand, total suspended solids, total dissolved solids, pH, settleable solids, e. coli bacteria, oil and grease, any pollutants listed in Table 20 of this rule division, and any pollutant for which the receiving stream has been designated by the Department as water quality limited; and

(b) Receiving stream flow, by month; and

(c) The expected impact of the discharge, by month, on the receiving stream for the entire proposed mixing zone area for all of the pollutants listed above. Included in this analysis shall be a comparison of the receiving stream water quality with the discharge and without the discharge; and

(d) A description of fish, other vertebrate populations, and macroinvertebrates that reside in or are likely to pass through the proposed mixing zone, including expected location (if known), species identification, stage of development, and time of year when their presence is expected. For existing discharges, the applicant shall provide the same information for similar nearby streams that are unaffected by wastewater discharges. In addition, any threatened or endangered species in the immediate vicinity of the receiving stream shall be identified; and

(e) The expected impact of the discharge on aquatic organisms and/or fish passage, including any expected negative impacts from the effluent attracting fish where that is not desirable; and

(f) A description of the expected environmental benefits to be derived from the discharge or other mitigation measures proposed by the applicant, including but not limited to improvements in water quality, improvements in fish passage, and improvements in aquatic habitat. If the applicant proposes to undertake mitigation measures designed to provide environmental benefits (e.g., purchasing water or water conservation rights to increase stream flows or establishing stream cover to decrease temperature), the applicant shall describe the mitigation measures in detail, including a description of the steps it will take to ensure that the benefits of the mitigation measures are attained and are not lost or diminished over time.

(g) Some or all of the above study requirements may be waived by the Department, if the Department determines that the information is not needed. In the event that the Department does waive some or all of the above study requirements, the basis for waiving the requirements will be included in the permit evaluation report upon the next permit renewal or modification relating to the mixing zone.

(h) Upon request of the Department, the applicant shall conduct additional studies to further evaluate the impact of the discharge, which may include whole effluent toxicity testing,

stream surveys for water quality, stream surveys for fish and other aquatic organisms, or other studies as specified by the Department.

(i) In evaluating whether an existing or proposed increase in an existing discharge would result in a net environmental benefit, the applicant shall use the native biological community in a nearby, similar stream that is unaffected by wastewater discharges. The Department shall consider all information generated as required in this rule and other relevant information. The evaluation shall consider benefits to the native aquatic biological community only.

(iii) Permit conditions: Upon determination by the Department that the discharge and mitigation measures (if any) will likely result in an overall environmental benefit, the Department shall include appropriate permit conditions to insure that the environmental benefits are attained and continue. Such permit conditions may include but not be limited to:

(a) Maximum allowed effluent flows and pollutant loads;

(b) Requirements to maintain land ownership, easements, contracts, or other legally binding measures necessary to assure that mitigation measures, if any, remain in place and effective;

(c) Special operating conditions;

(d) Monitoring and reporting requirements; and

(e) Studies to evaluate the effectiveness of mitigation measures.

(B) **Constructed water course**: A mixing zone may be extended through a constructed water course and into a natural water course. For the purposes of this rule, a constructed water course is one that was constructed for irrigation, site drainage, or wastewater conveyance, and has the following characteristics:

(i) Irrigation flows, stormwater runoff, or wastewater flows have replaced natural streamflow regimes; and

(ii) The channel form is greatly simplified in lengthwise and cross sectional profiles; and

(iii) Physical and biological characteristics that differ significantly from nearby natural streams; and

(iv) A much lower diversity of aquatic species than found in nearby natural streams; and

(v) If the constructed water course is an irrigation canal, then it must have effective fish screens in place to qualify as a constructed water course.

(C) **Insignificant discharges**: Insignificant discharges are those that either by volume, pollutant characteristics, and/or temporary nature are expected to have little if any impact on beneficial uses in the receiving stream, and for which the extensive evaluations required for discharges to smaller streams are not warranted. For the purposes of this rule, only filter backwash discharges and underground storage tank cleanups are considered insignificant discharges.

(D) **Other requirements for alternate mixing zones**: The following are additional requirements for dischargers requesting an alternate mixing zone:

(i) Most discharges that qualify for an alternate mixing zone will extend through the receiving stream until a larger stream is reached, where thorough mixing of the effluent can occur and where the edge of the allowed mixing zone will be located. The portion of the mixing zone in the larger stream must meet all of the requirements of the standard mixing zone, including not blocking aquatic life passage; and

(ii) An alternate mixing zone shall not be granted if a municipal drinking water intake is located within the proposed mixing zone, and the discharge has a significant adverse impact on the drinking water source; and

(iii) The discharge will not pose an unreasonable hazard to the environment or pose a significant health risk, considering the likely pathways of exposure; and

(iv) The discharge shall not be acutely toxic to organisms passing through the mixing zone; and

(v) An alternate mixing zone shall not be granted if the substances discharged may accumulate in the sediments or bioaccumulate in aquatic life or wildlife to levels that adversely affect public health, safety, or welfare; aquatic life; wildlife; or other designated beneficial uses; and

(vi) In the event that the receiving stream is water quality limited, the requirements for discharges to water quality limited streams supersede this rule.

(5) Testing methods: The analytical testing methods for determining compliance with the water quality standards contained in this rule shall be in accordance with the most recent edition of **Standard Methods for the Examination of Water and Waste Water published jointly by the American Public Health Association, American Water Works Association, and Water Pollution Control Federation**, unless the Department has published an applicable superseding method, in which case testing shall be in accordance with the superseding method; provided, however, that testing in accordance with an alternative method shall comply with this rule if the Department has published the method or has approved the method in writing.

[**Publications:** The publication(s) referred to or incorporated by reference in this rule are available from the office of the Department of Environmental Quality.]

Stat. Auth.: ORS 468B.035 & 468.735; ORS 468B.048
Stat. Implemented: ORS 468B.048
Hist.: DEQ 128, f. & ef. 1-21-77; DEQ 1-1980, f. & ef. 1-9-80; DEQ 18-1987, f. & ef. 9-4-87; DEQ 14-1991, f. & cert. ef. 8-13-91; DEQ 17-1992, f. & cert. ef. 8-7-92 (and corrected 8-13-92)

Minimum Design Criteria for Treatment and Control of Wastes

340-41-335 Subject to the implementation program set forth in OAR 340-41-120, prior to discharge of any wastes from any new or modified facility to any waters of the South Coast Basin, such wastes shall be treated and controlled in facilities designed in accordance with the following minimum criteria. (In designing treatment facilities, average conditions and a normal range of variability are generally used in establishing design criteria. A facility once completed and placed in operation should operate at or near the design limit most of the time but may operate below the design criteria limit at times due to variables which are unpredictable or uncontrollable. This is particularly true for biological treatment facilities. The actual operating limits are intended to be established by permit pursuant to ORS 468.740 and recognize that the actual performance level may at times be less than the design criteria.):

(1) Sewage wastes:

(a) During periods of low stream flows (approximately May 1 to October 31): Treatment resulting in monthly average effluent concentrations not to exceed 20 mg/l of BOD and 20 mg/l of SS or equivalent control;

(b) During the period of high stream flows (approximately November 1 to April 30) and for direct ocean discharges: A minimum of secondary treatment or equivalent control and unless otherwise specifically authorized by the Department, operation of all waste treatment and control facilities at maximum practicable efficiency and effectiveness so as to minimize waste discharges to

public waters;

(c) Effluent BOD concentration in mg/l, divided by the dilution factor (ratio of receiving stream flow to effluent flow) shall not exceed one unless otherwise approved by the EQC;

(d) Sewage wastes shall be disinfected, after treatment, equivalent to thorough mixing with sufficient chlorine to provide a residual of at least one (1) part per million after 60 minutes of contact time unless otherwise specifically authorized by permit;

(e) Positive protection shall be provided to prevent bypassing raw or inadequately treated sewage to public waters unless otherwise approved by the Department where elimination of inflow and infiltration would be necessary but not presently practicable;

(f) More stringent waste treatment and control requirements may be imposed where special conditions may require.

(2) Industrial wastes:

(a) After maximum practicable inplant control, a minimum of secondary treatment or equivalent control (reduction of suspended solids and organic material where present in significant quantities, effective disinfection where bacterial organisms of public health significance are present, and control of toxic or other deleterious substances);

(b) Specific industrial waste treatment requirements shall be determined on an individual basis in accordance with the provisions of this plan, applicable federal requirements, and the following:

(A) The uses which are or may likely be made of the receiving stream;

(B) The size and nature of flow of the receiving stream;

(C) The quantity and quality of wastes to be treated; and

(D) The presence or absence of other sources of pollution on the same watershed.

(c) Where industrial, commercial, or agricul-tural effluents contain significant quantities of potentially toxic elements, treatment requirements shall be determined utilizing appropriate bioassays;

(d) Industrial cooling waters containing significant heat loads shall be subjected to offstream cooling or heat recovery prior to discharge to public waters;

(e) Positive protection shall be provided to prevent bypassing of raw or inadequately treated industrial wastes to any public waters;

(f) Facilities shall be provided to prevent and contain spills of potentially toxic or hazardous materials and a positive program for containment and cleanup of such spills should they occur shall be developed and maintained.

Stat. Auth.: ORS Ch. 468
Hist.: DEQ 128, f. & ef. 1-21-77

Rogue Basin

Beneficial Water Uses to be Protected

340-41-362 Water quality in the Rogue River Basin (see **Figures 1** and **6**) shall be managed to protect the recognized beneficial uses as indicated in **Table 5**.

Stat. Auth.: ORS Ch. 468
Hist.: DEQ 128, f. & ef. 1-21-77; DEQ 9-1985, f. & ef. 8-6-85

Water Quality Standards Not to be Exceeded (To be Adopted Pursuant to ORS 468.735 and

Enforceable Pursuant to ORS 468.720, 468.990, and 468.992)

340-41-365 (1) Notwithstanding the water quality standards contained below, the highest and best practicable treatment and/or control of wastes, activities, and flows shall in every case be provided so as to maintain dissolved oxygen and overall water quality at the highest possible levels and water temperatures, coliform bacteria concentrations, dissolved chemical substances, toxic materials, radioactivity, turbidities, color, odor, and other deleterious factors at the lowest possible levels.

(2) No wastes shall be discharged and no activities shall be conducted which either alone or in combination with other wastes or activities will cause violation of the following standards in the waters of the Rogue River Basin:

(a) Dissolved oxygen (DO): The changes adopted by the Commission on January 11, 1996, become effective July 1, 1996. Until that time, the requirements of this rule that were in effect on January 10, 1996, apply:

(A) For waterbodies identified by the Department as providing salmonid spawning, during the periods from spawning until fry emergence from the gravels, the following criteria apply:

(i) The dissolved oxygen shall not be less than 11.0 mg/l. However, if the minimum intergravel dissolved oxygen, measured as a spatial median, is 8.0 mg/l or greater, then the DO criterion is 9.0 mg/l;

(ii) Where conditions of barometric pressure, altitude, and temperature preclude attainment of the 11.0 mg/l or 9.0 mg/l criteria, dissolved oxygen levels shall not be less than 95 percent of saturation.

(B) For waterbodies identified by the Department as providing salmonid spawning during the period from spawning until fry emergence from the gravels, the spatial median intergravel dissolved oxygen concentration shall not fall below 6.0 mg/l;

(C) A spatial median of 8.0 mg/l intergravel dissolved oxygen level shall be used to identify areas where the recognized beneficial use of salmonid spawning, egg incubation and fry emergence from the egg and from the gravels may be impaired and therefore require action by the Department. Upon determination that the spatial median intergravel dissolved oxygen concentration is below 8.0 mg/l, the Department may, in accordance with priorities established by the Department for evaluating water quality impaired waterbodies, determine whether to list the waterbody as water quality limited under the Section 303(d) of the Clean Water Act, initiate pollution control strategies as warranted, and where needed cooperate with appropriate designated management agencies to evaluate and implement necessary best management practices for nonpoint source pollution control;

(D) For waterbodies identified by the Department as providing cold-water aquatic life, the dissolved oxygen shall not be less than 8.0 mg/l as an absolute minimum. Where conditions of barometric pressure, altitude, and temperature preclude attainment of the 8.0 mg/l, dissolved oxygen shall not be less than 90 percent of saturation. At the discretion of the Department, when the Department determines that adequate information exists, the dissolved oxygen shall not fall below 8.0 mg/l as a 30-day mean minimum, 6.5 mg/l as a seven-day minimum mean, and shall not fall below 6.0 mg/l as an absolute minimum (**Table 21**);

(E) For waterbodies identified by the Department as providing cool-water aquatic life, the dissolved oxygen shall not be less than 6.5 mg/l as an absolute minimum. At the discretion of the Department, when the Department determines that adequate information exists, the dissolved oxygen shall not fall below 6.5 mg/l as a 30-day mean minimum, 5.0 mg/l as a seven-day minimum mean, and shall not fall below 4.0 mg/l as an absolute minimum (**Table 21**);

(F) For waterbodies identified by the Department as providing warm-water aquatic life, the dissolved oxygen shall not be less than 5.5 mg/l as an absolute minimum. At the discretion

of the Department, when the Department determines that adequate information exists, the dissolved oxygen shall not fall below 5.5 mg/l as a 30-day mean minimum, and shall not fall below 4.0 mg/l as an absolute minimum **(Table 21)**;

(G) For estuarine water, the dissolved oxygen concentrations shall not be less than 6.5 mg/l (for coastal waterbodies);

(H) For marine waters, no measurable reduction in dissolved oxygen concentration shall be allowed.

(b) Temperature: The changes adopted by the Commission on January 11, 1996, become effective July 1, 1996. Until that time, the requirements of this rule that were in effect on January 10, 1996, apply. The method for measuring the numeric temperature criteria specified in this rule is defined in OAR 340-41-006(54):

(A) To accomplish the goals identified in OAR 340-41-120(11), unless specifically allowed under a Department-approved surface water temperature management plan as required under OAR 340-41-026(3)(a)(D), no measurable surface water temperature increase resulting from anthropogenic activities is allowed:

(i) In a basin for which salmonid fish rearing is a designated beneficial use, and in which surface water temperatures exceed 64.0°F (17.8°C);

(ii) In waters and periods of the year determined by the Department to support native salmonid spawning, egg incubation, and fry emergence from the egg and from the gravels in a basin which exceeds 55.0°F (12.8°C);

(iii) In waters determined by the Department to support or to be necessary to maintain the viability of native Oregon bull trout, when surface water temperatures exceed 50.0°F (10.0°C);

(iv) In waters determined by the Department to be ecologically significant cold-water refugia;

(v) In stream segments containing federally listed Threatened and Endangered species if the increase would impair the biological integrity of the Threatened and Endangered population;

(vi) In Oregon waters when the dissolved oxygen (DO) levels are within 0.5 mg/l or 10 percent saturation of the water column or intergravel DO criterion for a given stream reach or subbasin;

(vii) In natural lakes.

(B) An exceedance of the numeric criteria identified in subparagraphs (A)(i) through (iii) of this subsection will not be deemed a temperature standard violation if it occurs when the air temperature during the warmest seven-day period of the year exceeds the 90th percentile of the seven-day average daily maximum air temperature calculated in a yearly series over the historic record. However, during such periods, the anthropogenic sources must still continue to comply with their surface water temperature management plans developed under OAR 340-41-026(3)(a)(D);

(C) Any source may petition the Commission for an exception to subparagraphs (A)(i) through (vii) of this subsection for discharge above the identified criteria if:

(i) The source provides the necessary scientific information to describe how the designated beneficial uses would not be adversely impacted; or

(ii) A source is implementing all reasonable management practices or measures; its activity will not significantly affect the beneficial uses; and the environmental cost of treating the parameter to the level necessary to assure full protection would outweigh the risk to the resource.

(D) Marine and estuarine waters: No significant increase above natural background temperatures shall be allowed, and water temperatures shall not be altered to a degree which creates or can reasonably be expected to create an adverse effect on fish or other aquatic life.

(c) Turbidity (Nephelometric Turbidity Units, NTU): No more than a ten percent cumulative increase in natural stream turbidities shall be allowed, as measured relative to a control point immediately upstream of the turbidity causing activity. However, limited duration activities necessary to address an emergency or to accommodate essential dredging, construction or other legitimate activities and which cause the standard to be exceeded may be authorized provided all practicable turbidity control techniques have been applied and one of the following has been granted:

(A) Emergency activities: Approval coordinated by DEQ with the Department of Fish and Wildlife under conditions they may prescribe to accommodate response to emergencies or to protect public health and welfare;

(B) Dredging, Construction or other Legitimate Activities: Permit or certification authorized under terms of Section 401 or 404 (Permits and Licenses, Federal Water Pollution Control Act) or OAR 141-85-100 et seq. (Removal and Fill Permits, Division of State Lands), with limitations and conditions governing the activity set forth in the permit or certificate.

(d) pH (hydrogen ion concentration): pH values shall not fall outside the following ranges:

(A) Marine waters: 7.0 - 8.5;

(B) Estuarine and fresh waters (except Cascade lakes): 6.5 - 8.5. The following exception applies: Waters impounded by dams existing on January 1, 1996, which have pHs that exceed the criteria shall not be considered in violation of the standard if the Department determines that the exceedance would not occur without the impoundment and that all practicable measures have been taken to bring the pH in the impounded waters into compliance with the criteria;

(C) Cascade lakes above 3,000 feet altitude: pH values shall not fall outside the range of 6.0 to 8.5.

(e) Bacteria standards:

(A) Numeric Criteria: Organisms of the coliform group commonly associated with fecal sources (MPN or equivalent membrane filtration using a representative number of samples) shall not exceed the criteria described in subparagraphs (i) and (ii) of this paragraph:

(i) Freshwaters and Estuarine Waters Other than Shellfish Growing Waters:

(I) A 30-day log mean of 126 *E. coli* organisms per 100 ml, based on a minimum of five (5) samples;

(II) No single sample shall exceed 406 *E. coli* organisms per 100 ml;

(ii) Marine Waters and Estuarine Shellfish Growing Waters: A fecal coliform median concentration of 14 organisms per 100 milliliters, with not more than ten percent of the samples exceeding 43 organisms per 100 ml.

(B) Raw Sewage Prohibition: No sewage shall be discharged into or in any other manner be allowed to enter the waters of the State unless such sewage has been treated in a manner approved by the Department or otherwise allowed by these rules;

(C) Animal Waste: Runoff contaminated with domesticated animal wastes shall be minimized and treated to the maximum extent practicable before it is allowed to enter waters of the State;

(D) Effluent Limitations and Water Quality Limited Waterbodies: Effluent limitations to implement the criteria in this rule are found in OAR 340-41-120(12) through (16). Implementation of the criteria in this rule in water quality limited waterbodies is described in OAR 340-41-026(3)(a)(I) and OAR 340-41-120(17).

(f) Bacterial pollution or other conditions deleterious to waters used for domestic purposes, livestock watering, irrigation, bathing, or shellfish propagation, or otherwise injurious to public health shall not be allowed;

(g) The liberation of dissolved gases, such as carbon dioxide, hydrogen sulfide, or other gases, in sufficient quantities to cause objectionable odors or to be deleterious to fish or other aquatic life, navigation, recreation, or other reasonable uses made of such waters shall not be allowed;

(h) The development of fungi or other growths having a deleterious effect on stream bottoms, fish or other aquatic life, or which are injurious to health, recreation, or industry shall not be allowed;

(i) The creation of tastes or odors or toxic or other conditions that are deleterious to fish or other aquatic life or affect the potability of drinking water or the palatability of fish or shellfish shall not be allowed;

(j) The formation of appreciable bottom or sludge deposits or the formation of any organic or inorganic deposits deleterious to fish or other aquatic life or injurious to public health, recreation, or industry shall not be allowed;

(k) Objectionable discoloration, scum, oily sleek, or floating solids, or coating of aquatic life with oil films shall not be allowed;

(l) Aesthetic conditions offensive to the human senses of sight, taste, smell, or touch shall not be allowed;

(m) Radioisotope concentrations shall not exceed maximum permissible concentrations (MPC's) in drinking water, edible fishes or shellfishes, wildlife, irrigated crops, livestock and dairy products, or pose an external radiation hazard;

(n) The concentration of total dissolved gas relative to atmospheric pressure at the point of sample collection shall not exceed 110 percent of saturation, except when stream flow exceeds the ten-year, seven-day average flood. However, for Hatchery receiving waters and waters of less than two feet in depth, the concentration of total dissolved gas relative to atmospheric pressure at the point of sample collection shall not exceed 105 percent of saturation;

(o) Total Dissolved Solids: Guide concentrations listed below shall not be exceeded unless otherwise specifically authorized by DEQ upon such conditions as it may deem necessary to carry out the general intent of this plan and to protect the beneficial uses set forth in OAR 340-41-362: 500.0 mg/l;

(p) Toxic Substances:

(A) Toxic substances shall not be introduced above natural background levels in the waters of the state in amounts, concentrations, or combinations which may be harmful, may chemically change to harmful forms in the environment, or may accumulate in sediments or bioaccumulate in aquatic life or wildlife to levels that adversely affect public health, safety, or welfare; aquatic life; wildlife; or other designated beneficial uses;

(B) Levels of toxic substances shall not exceed the criteria listed in **Table 20** which were based on criteria established by EPA and published in **Quality Criteria for Water (1986)**, unless otherwise noted;

(C) The criteria in paragraph (B) of this subsection shall apply unless data from scientifically valid studies demonstrate that the most sensitive designated beneficial uses will not be adversely affected by exceeding a criterion or that a more restrictive criterion is warranted to protect beneficial uses, as accepted by the Department on a site specific basis. Where no published EPA criteria exist for a toxic substance, public health advisories and other published scientific literature may be considered and used, if appropriate, to set guidance values;

(D) Bio-assessment studies such as laboratory bioassays or instream measurements of indigenous biological communities, shall be conducted, as the Department deems necessary, to monitor the toxicity of complex effluents, other suspected discharges or chemical substances without numeric criteria, to aquatic life. These studies, properly conducted in accordance with standard testing procedures, may be considered as scientifically valid data for the purposes of paragraph (C) of this subsection. If toxicity occurs, the Department shall evaluate and implement measures necessary to reduce toxicity on a case-by-case basis.

(3) Where the naturally occurring quality parameters of waters of the Rogue Basin are outside the numerical limits of the above assigned water quality standards, the naturally occurring water quality shall be the standard. However, in such cases special restrictions, described in OAR 340-41-026(3)(a)(C)(iii), apply to discharges that affect dissolved oxygen.

(4) Mixing zones:

(a) The Department may allow a designated portion of a receiving water to serve as a zone of dilution for wastewaters and receiving waters to mix thoroughly and this zone will be defined as a mixing zone;

(b) The Department may suspend all or part of the water quality standards, or set less restrictive standards, in the defined mixing zone, provided that the following conditions are met:

(A) The water within the mixing zone shall be free of:

(i) Materials in concentrations that will cause acute toxicity to aquatic life as measured by a Department approved bioassay method. Acute toxicity is lethality to aquatic life as measured by a significant difference in lethal concentration between the control and 100 percent effluent in an acute bioassay test. Lethality in 100 percent effluent may be allowed due to ammonia and chlorine only when it is demonstrated on a case-by-case basis that immediate dilution of the effluent within the mixing zone reduces toxicity below lethal concentrations. The Department may on a case-by-case basis establish a zone of immediate dilution if appropriate for other parameters;

(ii) Materials that will settle to form objectionable deposits;

(iii) Floating debris, oil, scum, or other materials that cause nuisance conditions;

(iv) Substances in concentrations that produce deleterious amounts of fungal or bacterial growths.

(B) The water outside the boundary of the mixing zone shall:

(i) Be free of materials in concentrations that will cause chronic (sublethal) toxicity. Chronic toxicity is measured as the concentration that causes long-term sublethal effects, such as significantly impaired growth or reproduction in aquatic organisms, during a testing period based on test species life cycle. Procedures and end points will be specified by the Department in wastewater discharge permits;

(ii) Meet all other water quality standards under normal annual low flow conditions.

(c) The limits of the mixing zone shall be described in the wastewater discharge permit. In determining the location, surface area, and volume of a mixing zone area, the Department may use appropriate mixing zone guidelines to assess the biological, physical, and chemical character of receiving waters, and effluent, and the most appropriate placement of the outfall, to protect instream water quality, public health, and other beneficial uses. Based on receiving water and effluent characteristics, the Department shall define a mixing zone in the immediate area of a wastewater discharge to:

(A) Be as small as feasible;

(B) Avoid overlap with any other mixing zones to the extent possible and be less than the total stream width as necessary to allow passage of fish and other aquatic organisms;

(C) Minimize adverse effects on the indigenous biological community especially when species are present that warrant special protection for their economic importance, tribal significance, ecological uniqueness, or for other similar reasons as determined by the Department and does not block the free passage of aquatic life;

(D) Not threaten public health;

(E) Minimize adverse effects on other designated beneficial uses outside the mixing zone.

(d) The Department may request the applicant of a permitted discharge for which a mixing zone is required, to submit all information necessary to define a mixing zone, such as:

(A) Type of operation to be conducted;

(B) Characteristics of effluent flow rates and composition;

(C) Characteristics of low flows of receiving waters;

(D) Description of potential environmental effects;

(E) Proposed design for outfall structures.

(e) The Department may, as necessary, require mixing zone monitoring studies and/or bioassays to be conducted to evaluate water quality or biological status within and outside the mixing zone boundary;

(f) The Department may change mixing zone limits or require the relocation of an outfall if it determines that the water quality within the mixing zone adversely affects any existing beneficial uses in the receiving waters.

(g) **Alternate requirements for mixing zones**: For some existing or proposed discharges to some receiving streams, it may not be practicable to treat wastewater to meet instream water quality standards at the point of discharge or within a short distance from the point of discharge. Some of these discharges could be allowed without impairing the overall ecological integrity of the receiving streams, or may provide an overall benefit to the receiving stream. This section specifies the conditions and circumstances under which a mixing zone may be allowed by the Department that extends beyond the immediate area around a discharge point, or that extends across a stream width. An alternate mixing zone may be approved if the applicant demonstrates to the Department's satisfaction that the discharge (A) creates an overall environmental benefit, or (B) is to a constructed water course, or (C) is insignificant. The three circumstances under which alternate mixing zones may be established are described further below.

(A) **Overall environmental benefit**.

(i) Qualifying for alternate mixing zone based on overall environmental benefit: In order to qualify for an alternate mixing zone based on a finding of overall environmental benefit, the discharger must demonstrate to the Department's satisfaction the following:

(a) That all practical strategies have been or will be implemented to minimize the pollutant loads in the effluent; and

(b) For proposed increased discharges, the current actual discharge and mixing zone does not meet the requirements of a standard mixing zone; and

(c) Either that, on balance, an environmental benefit would be lost if the discharge did not occur, or that the discharger is prepared to undertake other actions that will mitigate the effect of the discharge to an extent resulting in a net environmental benefit to the receiving stream.

(d) For the purposes of this rule, the term "practical" shall include environmental impact, availability of alternatives, cost of alternatives, and other relevant factors.

(ii) Studies required and evaluation of studies: In order to demonstrate that, on balance, an environmental benefit will result from the discharge, the following information shall be

provided by the applicant:

(a) The effluent flow and pollutant loads that are detected or expected in the effluent, by month, both average and expected worst case discharges. The parameters to be evaluated include at a minimum temperature, biochemical oxygen demand, total suspended solids, total dissolved solids, pH, settleable solids, e. coli bacteria, oil and grease, any pollutants listed in Table 20 of this rule division, and any pollutant for which the receiving stream has been designated by the Department as water quality limited; and

(b) Receiving stream flow, by month; and

(c) The expected impact of the discharge, by month, on the receiving stream for the entire proposed mixing zone area for all of the pollutants listed above. Included in this analysis shall be a comparison of the receiving stream water quality with the discharge and without the discharge; and

(d) A description of fish, other vertebrate populations, and macroinvertebrates that reside in or are likely to pass through the proposed mixing zone, including expected location (if known), species identification, stage of development, and time of year when their presence is expected. For existing discharges, the applicant shall provide the same information for similar nearby streams that are unaffected by wastewater discharges. In addition, any threatened or endangered species in the immediate vicinity of the receiving stream shall be identified; and

(e) The expected impact of the discharge on aquatic organisms and/or fish passage, including any expected negative impacts from the effluent attracting fish where that is not desirable; and

(f) A description of the expected environmental benefits to be derived from the discharge or other mitigation measures proposed by the applicant, including but not limited to improvements in water quality, improvements in fish passage, and improvements in aquatic habitat. If the applicant proposes to undertake mitigation measures designed to provide environmental benefits (e.g., purchasing water or water conservation rights to increase stream flows or establishing stream cover to decrease temperature), the applicant shall describe the mitigation measures in detail, including a description of the steps it will take to ensure that the benefits of the mitigation measures are attained and are not lost or diminished over time.

(g) Some or all of the above study requirements may be waived by the Department, if the Department determines that the information is not needed. In the event that the Department does waive some or all of the above study requirements, the basis for waiving the requirements will be included in the permit evaluation report upon the next permit renewal or modification relating to the mixing zone.

(h) Upon request of the Department, the applicant shall conduct additional studies to further evaluate the impact of the discharge, which may include whole effluent toxicity testing, stream surveys for water quality, stream surveys for fish and other aquatic organisms, or other studies as specified by the Department.

(i) In evaluating whether an existing or proposed increase in an existing discharge would result in a net environmental benefit, the applicant shall use the native biological community in a nearby, similar stream that is unaffected by wastewater discharges. The Department shall consider all information generated as required in this rule and other relevant information. The evaluation shall consider benefits to the native aquatic biological community only.

(iii) Permit conditions: Upon determination by the Department that the discharge and mitigation measures (if any) will likely result in an overall environmental benefit, the Department shall include appropriate permit conditions to insure that the environmental benefits

are attained and continue. Such permit conditions may include but not be limited to:

(a) Maximum allowed effluent flows and pollutant loads;

(b) Requirements to maintain land ownership, easements, contracts, or other legally binding measures necessary to assure that mitigation measures, if any, remain in place and effective;

(c) Special operating conditions;

(d) Monitoring and reporting requirements; and

(e) Studies to evaluate the effectiveness of mitigation measures.

(B) **Constructed water course**: A mixing zone may be extended through a constructed water course and into a natural water course. For the purposes of this rule, a constructed water course is one that was constructed for irrigation, site drainage, or wastewater conveyance, and has the following characteristics:

(i) Irrigation flows, stormwater runoff, or wastewater flows have replaced natural streamflow regimes; and

(ii) The channel form is greatly simplified in lengthwise and cross sectional profiles; and

(iii) Physical and biological characteristics that differ significantly from nearby natural streams; and

(iv) A much lower diversity of aquatic species than found in nearby natural streams; and

(v) If the constructed water course is an irrigation canal, then it must have effective fish screens in place to qualify as a constructed water course.

(C) **Insignificant discharges**: Insignificant discharges are those that either by volume, pollutant characteristics, and/or temporary nature are expected to have little if any impact on beneficial uses in the receiving stream, and for which the extensive evaluations required for discharges to smaller streams are not warranted. For the purposes of this rule, only filter backwash discharges and underground storage tank cleanups are considered insignificant discharges.

(D) **Other requirements for alternate mixing zones**: The following are additional requirements for dischargers requesting an alternate mixing zone:

(i) Most discharges that qualify for an alternate mixing zone will extend through the receiving stream until a larger stream is reached, where thorough mixing of the effluent can occur and where the edge of the allowed mixing zone will be located. The portion of the mixing zone in the larger stream must meet all of the requirements of the standard mixing zone, including not blocking aquatic life passage; and

(ii) An alternate mixing zone shall not be granted if a municipal drinking water intake is located within the proposed mixing zone, and the discharge has a significant adverse impact on the drinking water source; and

(iii) The discharge will not pose an unreasonable hazard to the environment or pose a significant health risk, considering the likely pathways of exposure; and

(iv) The discharge shall not be acutely toxic to organisms passing through the mixing zone; and

(v) An alternate mixing zone shall not be granted if the substances discharged may accumulate in the sediments or bioaccumulate in aquatic life or wildlife to levels that adversely affect public health, safety, or welfare; aquatic life; wildlife; or other designated beneficial uses; and

(vi) In the event that the receiving stream is water quality limited, the requirements for discharges to water quality limited streams supersede this rule.

(5) Testing methods: The analytical testing methods for determining compliance with the water quality standards contained in this rule shall be in accordance with the most recent edition of **Standard Methods for the Examination of Water and Waste Water published jointly by the American Public Health Association, American Water Works Association, and Water Pollution Control Federation,** unless the Department has published an applicable superseding method, in which case testing shall be in accordance with the superseding method; provided, however, that testing in accordance with an alternative method shall comply with this rule if the Department has published the method or has approved the method in writing.

[**Publications:** The publication(s) referred to or incorporated by reference in this rule are available from the office of the Department of Environmental Quality.]

Stat. Auth.: ORS 468B.035 & 468.735; ORS 468B.048
Stat. Implemented: ORS 468B.048
Hist.: DEQ 128, f. & ef. 1-21-77; DEQ 1-1980, f. & ef. 1-9-80; DEQ 18-1987, f. & ef. 9-4-87; DEQ 14-1991, f. & cert. ef. 8-13-91; DEQ 17-1992, f. & cert. ef. 8-7-92 (and corrected 8-13-92)

Minimum Design Criteria for Treatment and Control of Wastes

340-41-375 Subject to the implementation program set forth in OAR 340-41-120, prior to discharge of any waste from any new or modified facility to any waters of the Rogue River Basin, such wastes shall be treated and controlled in facilities designed in accordance with the following minimum criteria. (In designing treatment facilities, average conditions and a normal range of variability are generally used in establishing design criteria. A facility once completed and placed in operation should operate at or near the design limit most of the time but may operate below the design criteria limit at times due to variables which are unpredictable or uncontrollable. This is particularly true for biological treatment facilities. The actual operating limits are intended to be established by permit pursuant to ORS 468.740 and recognize that the actual performance level may at times be less than the design criteria.):

(1) Sewage wastes:

(a) During periods of low stream flows (approximately May 1 to October 31): Treatment resulting in monthly average effluent concen-trations not to exceed 10 mg/l of BOD and 10 mg/l of SS or equivalent control;

(b) During the period of high stream flows (approximately November 1 to April 30): A minimum of secondary treatment or equivalent control and unless otherwise specifically authorized by the Department, operation of all waste treatment and control facilities at maximum practicable efficiency and effectiveness so as to minimize waste discharges to public waters;

(c) Effluent BOD concentrations in mg/l, divided by the dilution factor (ratio of receiving stream flow to effluent flow) shall not exceed one unless otherwise approved by the EQC;

(d) Sewage wastes shall be disinfected, after treatment, equivalent to thorough mixing with sufficient chlorine to provide a residual of at least 1 part per million after 60 minutes of contact time unless otherwise specifically authorized by permit;

(e) Positive protection shall be provided to prevent bypassing raw or inadequately treated sewage to public waters unless otherwise approved by the Department where elimination of inflow and infiltration would be necessary but not presently practicable;

(f) More stringent waste treatment and control requirements may be imposed where special conditions may require.

(2) Industrial wastes:

(a) After maximum practicable inplant control, a minimum of secondary treatment or equivalent control (reduction of suspended solids and organic material where present in significant quantities, effective disinfection where bacterial organisms of public health significance are present, and control of toxic or other deleterious substances);

(b) Specific industrial waste treatment requirements shall be determined on an individual basis in accordance with the provisions of this plan, applicable federal requirements, and the following:

(A) The uses which are or may likely be made of the receiving stream;

(B) The size and nature of flow of the receiving stream;

(C) The quantity and quality of wastes to be treated; and

(D) The presence or absence of other sources of pollution on the same watershed.

(c) Where industrial, commercial, or agricul-tural effluents contain significant quantities of potentially toxic elements, treatment requirements shall be determined utilizing appropriate bioassays;

(d) Industrial cooling waters containing significant heat loads shall be subjected to offstream cooling or heat recovery prior to discharge to public waters;

(e) Positive protection shall be provided to prevent bypassing of raw or inadequately treated industrial wastes to any public waters;

(f) Facilities shall be provided to prevent and contain spills of potentially toxic or hazardous materials and a positive program for containment and cleanup of such spills should they occur shall be developed and maintained.

Stat. Auth.: ORS Ch. 468
Hist.: DEQ 128, f. & ef. 1-21-77

Special Policies and Guidelines

340-41-385 In order to improve water quality within the Bear Creek subbasin to meet existing water quality standards for dissolved oxygen and pH, the following special rules for total maximum daily loads, waste load allocations, load allocations, and program plans are established.

(1) After the completion of wastewater control facilities and program plans approved by the Commission under this rule and no later than December 31, 1994, unless otherwise modified by program plans no activities shall be allowed and no wastewater shall be discharged to Bear Creek or its tributaries without the authorization of the Commission that cause the following parameters to be exceeded in Bear Creek:

Low-Flow Season Approximately May 1 through November 30*

Ammonia Nitrogen Nitrogen as N (mg/1)	Instream Five-Day Biochemical Oxygen (Demand (mg/1)[1]	Total Phosphorus as P (mg/1)
0.25	3.0	0.08

High Flow Season Approximately December 1 through April 30*

Ammonia Nitrogen Nitrogen as N (mg/1)	Instream Five-Day Biochemical Oxygen Demand (mg/1)[2]
1.0	2.5

[1]As measured at the Valley View Road Sampling Site. For the purposes of waste load allocations, the biochemical oxygen demand is calculated as the ammonia concentration multiplied by 4.35 and added to the measured effluent biochemical oxygen demand.
[2]Median value as measured at the Kirtland Road sampling site.
*Precise dates for complying with this rule may be conditioned on physical conditions, such as flow and temperature, of the receiving stream and shall be specified in individual permits or memorandums of understanding issued by the Department.

(2) The Department shall before September 30, 1990 distribute initial waste load and load allocations to point and nonpoint sources in the basin. These loads are interim and may be redistributed upon conclusion of the approved program plans;

(3) Before October 21, 1989, the City of Ashland shall submit to the Department a program plan and time schedule describing how and when they will modify their sewerage facility to comply with this rule and all other applicable rules regulating waste discharges;

(4) Before May 25, 1991, the industries permitted for log pond discharge, Boise Cascade Corporation, Kogap Manufacturing Company, and Medford Corporation shall submit program plans to the Department describing how and when they will modify their operations to comply with this rule and all other applicable rules regulating waste discharge;

(5) Before June 1, 1992, Jackson County and the incorporated cities within the Bear Creek subbasin shall submit to the Department a program plan for controlling urban runoff within their respective jurisdictions to comply with these rules;

(6) Before June 1, 1992, the Departments of Forestry and Agriculture shall submit to the Department program plans for achieving specified load allocations of state and private forest lands and agricultural lands respectively;

(7) Program plans shall be reviewed and approved by the Commission. All proposed final program plans shall be subject to public comment and hearing prior to consideration for approval by the Commission.

Stat. Auth.: ORS 468.710 & 468.735
Hist.: DEQ 17-1989, f. & cert. ef. 7-31-89; DEQ 40-1990, f. & cert. ef. 11-15-90

Willamette Basin

Beneficial Water Uses to be Protected

340-41-442 Water quality in the Willamette River Basin (see **Figures 1** and **7**) shall be managed to protect the recognized beneficial uses as indicated in **Table 6**.

Stat. Auth.: ORS Ch. 468
Hist.: DEQ 128, f. & ef. 1-21-77

Water Quality Standards Not to be Exceeded (To be Adopted Pursuant to ORS 468.735 and Enforceable Pursuant to ORS 468.720, 468.990, and 468.992)

340-41-445 (1) Notwithstanding the water quality standards contained below, the highest and best practicable treatment and/or control of wastes, activities, and flows shall in every case be provided so as to maintain dissolved oxygen and overall water quality at the highest possible levels and water temperatures, coliform bacteria concentrations, dissolved chemical substances, toxic materials, radioactivity, turbidities, color, odor, and other deleterious factors at the lowest possible levels.

(2) No wastes shall be discharged and no activities shall be conducted which either alone or in combination with other wastes or activities will cause violation of the following standards in the waters of the Willamette River Basin:

(a) Dissolved oxygen (DO): The changes adopted by the Commission on January 11, 1996, become effective July 1, 1996. Until that time, the requirements of this rule that were in effect on January 10, 1996, apply:

(A) For waterbodies identified by the Department as providing salmonid spawning, during the periods from spawning until fry emergence from the gravels, the following criteria apply:

(i) The dissolved oxygen shall not be less than 11.0 mg/l. However, if the minimum intergravel dissolved oxygen, measured as a spatial median, is 8.0 mg/l or greater, then the DO criterion is 9.0 mg/l;

(ii) Where conditions of barometric pressure, altitude, and temperature preclude attainment of the 11.0 mg/l or 9.0 mg/l criteria, dissolved oxygen levels shall not be less than 95 percent of saturation.

(B) For waterbodies identified by the Department as providing salmonid spawning during the period from spawning until fry emergence from the gravels, the spatial median intergravel dissolved oxygen concentration shall not fall below 6.0 mg/l;

(C) A spatial median of 8.0 mg/l intergravel dissolved oxygen level shall be used to identify areas where the recognized beneficial use of salmonid spawning, egg incubation and fry emergence from the egg and from the gravels may be impaired and therefore require action by the Department. Upon determination that the spatial median intergravel dissolved oxygen concentration is below 8.0 mg/l, the Department may, in accordance with priorities established by the Department for evaluating water quality impaired waterbodies, determine whether to list the waterbody as water quality limited under the Section 303(d) of the Clean Water Act, initiate pollution control strategies as warranted, and where needed cooperate with appropriate designated management agencies to evaluate and implement necessary best management practices for nonpoint source pollution control;

(D) For waterbodies identified by the Department as providing cold-water aquatic life, the dissolved oxygen shall not be less than 8.0 mg/l as an absolute minimum. Where conditions of barometric pressure, altitude, and temperature preclude attainment of the 8.0 mg/l, dissolved oxygen shall not be less than 90 percent of saturation. At the discretion of the Department, when the Department determines that adequate information exists, the dissolved oxygen shall not fall below 8.0 mg/l as a 30-day mean minimum, 6.5 mg/l as a seven-day minimum mean, and shall not fall below 6.0 mg/l as an absolute minimum (**Table 21**);

(E) For waterbodies identified by the Department as providing cool-water aquatic life, the dissolved oxygen shall not be less than 6.5 mg/l as an absolute minimum. At the discretion of the Department, when the Department determines that adequate information exists, the dissolved oxygen shall not fall below 6.5 mg/l as a 30-day mean minimum, 5.0 mg/l as a seven-day minimum mean, and shall not fall below 4.0 mg/l as an absolute minimum (**Table 21**);

(F) For waterbodies identified by the Department as providing warm-water aquatic life, the dissolved oxygen shall not be less than 5.5 mg/l as an absolute minimum. At the discretion of the Department, when the Department determines that adequate information exists, the

dissolved oxygen shall not fall below 5.5 mg/l as a 30-day mean minimum, and shall not fall below 4.0 mg/l as an absolute minimum (**Table 21**);

(b) Temperature: The changes adopted by the Commission on January 11, 1996, become effective July 1, 1996. Until that time, the requirements of this rule that were in effect on January 10, 1996, apply. The method for measuring the numeric temperature criteria specified in this rule is defined in OAR 340-41-006(54):

(A) To accomplish the goals identified in OAR 340-41-120(11), unless specifically allowed under a Department-approved surface water temperature management plan as required under OAR 340-41-026(3)(a)(D), no measurable surface water temperature increase resulting from anthropogenic activities is allowed:

(i) In a basin for which salmonid fish rearing is a designated beneficial use, and in which surface water temperatures exceed 64.0°F (17.8°C);

(ii) In the Columbia River or its associated sloughs and channels from the mouth to river mile 309 when surface water temperatures exceed 68.0°F (20.0°C);

(iii) In the Willamette River or its associated sloughs and channels from the mouth to river mile 50 when surface water temperatures exceed 68.0°F (20.0°C);

(iv) In waters and periods of the year determined by the Department to support native salmonid spawning, egg incubation, and fry emergence from the egg and from the gravels in a basin which exceeds 55.0°F (12.8°C);

(v) In waters determined by the Department to support or to be necessary to maintain the viability of native Oregon bull trout, when surface water temperatures exceed 50.0°F (10.0°C);

(vi) In waters determined by the Department to be ecologically significant cold-water refugia;

(vii) In stream segments containing federally listed Threatened and Endangered species if the increase would impair the biological integrity of the Threatened and Endangered population;

(viii) In Oregon waters when the dissolved oxygen (DO) levels are within 0.5 mg/l or 10 percent saturation of the water column or intergravel DO criterion for a given stream reach or subbasin;

(ix) In natural lakes.

(B) An exceedance of the numeric criteria identified in subparagraphs (A)(i) through (v) of this subsection will not be deemed a temperature standard violation if it occurs when the air temperature during the warmest seven-day period of the year exceeds the 90th percentile of the seven-day average daily maximum air temperature calculated in a yearly series over the historic record. However, during such periods, the anthropogenic sources must still continue to comply with their surface water temperature management plans developed under OAR 340-41-026(3)(a)(D);

(C) Any source may petition the Commission for an exception to subparagraphs (A)(i) through (ix) of this subsection for discharge above the identified criteria if:

(i) The source provides the necessary scientific information to describe how the designated beneficial uses would not be adversely impacted; or

(ii) A source is implementing all reasonable management practices or measures; its activity will not significantly affect the beneficial uses; and the environmental cost of treating the parameter to the level necessary to assure full protection would outweigh the risk to the resource.

(c) Turbidity (Nephelometric Turbidity Units, NTU): No more than a ten percent cumulative increase in natural stream turbidities shall be allowed, as measured relative to a control point immediately upstream of the turbidity causing activity. However, limited duration activities necessary to address an emergency or to accommodate essential dredging, construction or other legitimate activities and which cause the standard to be exceeded may be authorized

provided all practicable turbidity control techniques have been applied and one of the following has been granted:

(A) Emergency activities: Approval coordinated by DEQ with the Department of Fish and Wildlife under conditions they may prescribe to accommodate response to emergencies or to protect public health and welfare;

(B) Dredging, Construction or other Legitimate Activities: Permit or certification authorized under terms of Section 401 or 404 (Permits and Licenses, Federal Water Pollution Control Act) or OAR 141-85-100 et seq. (Removal and Fill Permits, Division of State Lands), with limitations and conditions governing the activity set forth in the permit or certificate.

(d) pH (hydrogen ion concentration): pH values shall not fall outside the ranges identified in paragraphs (A), (B), and (C) of this subsection. The following exception applies: Waters impounded by dams existing on January 1, 1996, which have pHs that exceed the criteria shall not be considered in violation of the standard if the Department determines that the exceedance would not occur without the impoundment and that all practicable measures have been taken to bring the pH in the impounded waters into compliance with the criteria:

(A) Columbia River: 7.0 - 8.5;

(B) All other basin waters (except Cascade lakes): 6.5 - 8.5;

(C) Cascade lakes above 3,000 feet altitude: pH values shall not fall outside the range of 6.0 to 8.5.

(e) Bacteria standards:

(A) Numeric Criteria: Organisms of the coliform group commonly associated with fecal sources (MPN or equivalent membrane filtration using a representative number of samples) shall not exceed the criteria described in subparagraphs (i) and (ii) of this paragraph. Freshwaters and Estuarine Waters:

(i) A 30-day log mean of 126 *E. coli* organisms per 100 ml, based on a minimum of five (5) samples;

(ii) No single sample shall exceed 406 *E. coli* organisms per 100 ml;

(B) Raw Sewage Prohibition: No sewage shall be discharged into or in any other manner be allowed to enter the waters of the State unless such sewage has been treated in a manner approved by the Department or otherwise allowed by these rules;

(C) Animal Waste: Runoff contaminated with domesticated animal wastes shall be minimized and treated to the maximum extent practicable before it is allowed to enter waters of the State;

(D) Effluent Limitations and Water Quality Limited Waterbodies: Effluent limitations to implement the criteria in this rule are found in OAR 340-41-120(12) through (16). Implementation of the criteria in this rule in water quality limited waterbodies is described in OAR 340-41-026(3)(a)(I) and OAR 340-41-120(17).

(f) Bacterial pollution or other conditions deleterious to waters used for domestic purposes, livestock watering, irrigation, bathing, or shellfish propagation, or otherwise injurious to public health shall not be allowed;

(g) The liberation of dissolved gases, such as carbon dioxide, hydrogen sulfide, or other gases, in sufficient quantities to cause objectionable odors or to be deleterious to fish or other aquatic life, navigation, recreation, or other reasonable uses made of such waters shall not be allowed;

(h) The development of fungi or other growths having a deleterious effect on stream bottoms, fish or other aquatic life, or which are injurious to health, recreation, or industry shall not be allowed;

(i) The creation of tastes or odors or toxic or other conditions that are deleterious to fish or other aquatic life or affect the potability of drinking water or the palatability of fish or

shellfish shall not be allowed;

(j) The formation of appreciable bottom or sludge deposits or the formation of any organic or inorganic deposits deleterious to fish or other aquatic life or injurious to public health, recreation, or industry shall not be allowed;

(k) Objectionable discoloration, scum, oily sleek or floating solids, or coating of aquatic life with oil films shall not be allowed;

(l) Aesthetic conditions offensive to the human senses of sight, taste, smell, or touch shall not be allowed;

(m) Radioisotope concentrations shall not exceed maximum permissible concentrations (MPC's) in drinking water, edible fishes or shellfishes, wildlife, irrigated crops, livestock and dairy products, or pose an external radiation hazard;

(n) (A) The concentration of total dissolved gas relative to atmospheric pressure at the point of sample collection shall not exceed 110 percent of saturation, except when stream flow exceeds the ten-year, seven-day average flood. However, for Hatchery receiving waters and waters of less than two feet in depth, the concentration of total dissolved gas relative to atmospheric pressure at the point of sample collection shall not exceed 105 percent of saturation;

(B) The Commission may modify the total dissolved gas criteria in the Columbia River for the purpose of allowing increased spill for salmonid migration. The Commission must find that:

(i) Failure to act would result in greater harm to salmonid stock survival through in-river migration than would occur by increased spill;

(ii) The modified total dissolved gas criteria associated with the increased spill provides a reasonable balance of the risk of impairment due to elevated total dissolved gas to both resident biological communities and other migrating fish and to migrating adult and juvenile salmonids when compared to other options for in-river migration of salmon;

(iii) Adequate data will exist to determine compliance with the standards; and

(iv) Biological monitoring is occurring to document that the migratory salmonid and resident biological communities are being protected.

(C) The Commission will give public notice and notify all known interested parties and will make provision for opportunity to be heard and comment on the evidence presented by others, except that the Director may modify the total dissolved gas criteria for emergencies for a period not exceeding 48 hours;

(D) The Commission may, at its discretion, consider alternative modes of migration.

(o) Total Dissolved Solids: Guide concentrations listed below shall not be exceeded unless otherwise specifically authorized by DEQ upon such conditions as it may deem necessary to carry out the general intent of this plan and to protect the beneficial uses set forth in OAR 340-41-442:

(A) Columbia River . . . . . 500.0 mg/l;

(B) Willamette River and Tributaries . . 100.0 mg/l.

(p) Toxic Substances:

(A) Toxic substances shall not be introduced above natural background levels in the waters of the state in amounts, concentrations, or combinations which may be harmful, may chemically change to harmful forms in the environment, or may accumulate in sediments or bioaccumulate in aquatic life or wildlife to levels that adversely affect public health, safety, or welfare; aquatic life; wildlife; or other designated beneficial uses;

(B) Levels of toxic substances shall not exceed the criteria listed in **Table 20** which were based on criteria established by EPA and published in **Quality Criteria for Water (1986)**, unless otherwise noted;

(C) The criteria in paragraph (B) of this subsection shall apply unless data from scientifically valid studies demonstrate that the most sensitive designated beneficial uses will not

be adversely affected by exceeding a criterion or that a more restrictive criterion is warranted to protect beneficial uses, as accepted by the Department on a site specific basis. Where no published EPA criteria exist for a toxic substance, public health advisories and other published scientific literature may be considered and used, if appropriate, to set guidance values;

(D) Bio-assessment studies such as laboratory bioassays or instream measurements of indigenous biological communities, shall be conducted, as the Department deems necessary, to monitor the toxicity of complex effluents, other suspected discharges or chemical substances without numeric criteria, to aquatic life. These studies, properly conducted in accordance with standard testing procedures, may be considered as scientifically valid data for the purposes of paragraph (C) of this subsection. If toxicity occurs, the Department shall evaluate and implement measures necessary to reduce toxicity on a case-by-case basis.

(3) Where the naturally occurring quality parameters of waters of the Willamette River Basin are outside the numerical limits of the above assigned water quality standards, the naturally occurring water quality shall be the standard. However, in such cases special restrictions, described in OAR 340-41-026(3)(a)(C)(iii), apply to discharges that affect dissolved oxygen.

(4) Mixing zones:

(a) The Department may allow a designated portion of a receiving water to serve as a zone of dilution for wastewaters and receiving waters to mix thoroughly and this zone will be defined as a mixing zone;

(b) The Department may suspend all or part of the water quality standards, or set less restrictive standards, in the defined mixing zone, provided that the following conditions are met:

(A) The water within the mixing zone shall be free of:

(i) Materials in concentrations that will cause acute toxicity to aquatic life as measured by a Department approved bioassay method. Acute toxicity is lethality to aquatic life as measured by a significant difference in lethal concentration between the control and 100 percent effluent in an acute bioassay test. Lethality in 100 percent effluent may be allowed due to ammonia and chlorine only when it is demonstrated on a case-by-case basis that immediate dilution of the effluent within the mixing zone reduces toxicity below lethal concentrations. The Department may on a case-by-case basis establish a zone of immediate dilution if appropriate for other parameters;

(ii) Materials that will settle to form objectionable deposits;

(iii) Floating debris, oil, scum, or other materials that cause nuisance conditions;

(iv) Substances in concentrations that produce deleterious amounts of fungal or bacterial growths.

(B) The water outside the boundary of the mixing zone shall:

(i) Be free of materials in concentrations that will cause chronic (sublethal) toxicity. Chronic toxicity is measured as the concentration that causes long-term sublethal effects, such as significantly impaired growth or reproduction in aquatic organisms, during a testing period based on test species life cycle. Procedures and end points will be specified by the Department in wastewater discharge permits;

(ii) Meet all other water quality standards under normal annual low flow conditions.

(c) The limits of the mixing zone shall be described in the wastewater discharge permit. In determining the location, surface area, and volume of a mixing zone area, the Department may use appropriate mixing zone guidelines to assess the biological, physical, and chemical character of receiving waters, and effluent, and the most appropriate placement of the outfall, to protect instream water quality, public health, and other beneficial uses. Based on receiving water and effluent characteristics, the Department shall define a mixing zone in the immediate area of a wastewater discharge to:

(A) Be as small as feasible;

(B) Avoid overlap with any other mixing zones to the extent possible and be less than the

total stream width as necessary to allow passage of fish and other aquatic organisms;

(C) Minimize adverse effects on the indigenous biological community especially when species are present that warrant special protection for their economic importance, tribal significance, ecological uniqueness, or for other similar reasons as determined by the Department and does not block the free passage of aquatic life;

(D) Not threaten public health;

(E) Minimize adverse effects on other designated beneficial uses outside the mixing zone.

(d) The Department may request the applicant of a permitted discharge for which a mixing zone is required, to submit all information necessary to define a mixing zone, such as:

(A) Type of operation to be conducted;

(B) Characteristics of effluent flow rates and composition;

(C) Characteristics of low flows of receiving waters;

(D) Description of potential environmental effects;

(E) Proposed design for outfall structures.

(e) The Department may, as necessary, require mixing zone monitoring studies and/or bioassays to be conducted to evaluate water quality or biological status within and outside the mixing zone boundary;

(f) The Department may change mixing zone limits or require the relocation of an outfall if it determines that the water quality within the mixing zone adversely affects any existing beneficial uses in the receiving waters.

(g) **Alternate requirements for mixing zones**: For some existing or proposed discharges to some receiving streams, it may not be practicable to treat wastewater to meet instream water quality standards at the point of discharge or within a short distance from the point of discharge. Some of these discharges could be allowed without impairing the overall ecological integrity of the receiving streams, or may provide an overall benefit to the receiving stream. This section specifies the conditions and circumstances under which a mixing zone may be allowed by the Department that extends beyond the immediate area around a discharge point, or that extends across a stream width. An alternate mixing zone may be approved if the applicant demonstrates to the Department's satisfaction that the discharge (A) creates an overall environmental benefit, or (B) is to a constructed water course, or (C) is insignificant. The three circumstances under which alternate mixing zones may be established are described further below.

(A) **Overall environmental benefit.**

(i) Qualifying for alternate mixing zone based on overall environmental benefit: In order to qualify for an alternate mixing zone based on a finding of overall environmental benefit, the discharger must demonstrate to the Department's satisfaction the following:

(a) That all practical strategies have been or will be implemented to minimize the pollutant loads in the effluent; and

(b) For proposed increased discharges, the current actual discharge and mixing zone does not meet the requirements of a standard mixing zone; and

(c) Either that, on balance, an environmental benefit would be lost if the discharge did not occur, or that the discharger is prepared to undertake other actions that will mitigate the effect of the discharge to an extent resulting in a net environmental benefit to the receiving stream.

(d) For the purposes of this rule, the term "practical" shall include environmental impact, availability of alternatives, cost of alternatives, and other relevant factors.

(ii) Studies required and evaluation of studies: In order to demonstrate that, on balance, an environmental benefit will result from the discharge, the following information shall be

provided by the applicant:

(a) The effluent flow and pollutant loads that are detected or expected in the effluent, by month, both average and expected worst case discharges. The parameters to be evaluated include at a minimum temperature, biochemical oxygen demand, total suspended solids, total dissolved solids, pH, settleable solids, e. coli bacteria, oil and grease, any pollutants listed in Table 20 of this rule division, and any pollutant for which the receiving stream has been designated by the Department as water quality limited; and

(b) Receiving stream flow, by month; and

(c) The expected impact of the discharge, by month, on the receiving stream for the entire proposed mixing zone area for all of the pollutants listed above. Included in this analysis shall be a comparison of the receiving stream water quality with the discharge and without the discharge; and

(d) A description of fish, other vertebrate populations, and macroinvertebrates that reside in or are likely to pass through the proposed mixing zone, including expected location (if known), species identification, stage of development, and time of year when their presence is expected. For existing discharges, the applicant shall provide the same information for similar nearby streams that are unaffected by wastewater discharges. In addition, any threatened or endangered species in the immediate vicinity of the receiving stream shall be identified; and

(e) The expected impact of the discharge on aquatic organisms and/or fish passage, including any expected negative impacts from the effluent attracting fish where that is not desirable; and

(f) A description of the expected environmental benefits to be derived from the discharge or other mitigation measures proposed by the applicant, including but not limited to improvements in water quality, improvements in fish passage, and improvements in aquatic habitat. If the applicant proposes to undertake mitigation measures designed to provide environmental benefits (e.g., purchasing water or water conservation rights to increase stream flows or establishing stream cover to decrease temperature), the applicant shall describe the mitigation measures in detail, including a description of the steps it will take to ensure that the benefits of the mitigation measures are attained and are not lost or diminished over time.

(g) Some or all of the above study requirements may be waived by the Department, if the Department determines that the information is not needed. In the event that the Department does waive some or all of the above study requirements, the basis for waiving the requirements will be included in the permit evaluation report upon the next permit renewal or modification relating to the mixing zone.

(h) Upon request of the Department, the applicant shall conduct additional studies to further evaluate the impact of the discharge, which may include whole effluent toxicity testing, stream surveys for water quality, stream surveys for fish and other aquatic organisms, or other studies as specified by the Department.

(i) In evaluating whether an existing or proposed increase in an existing discharge would result in a net environmental benefit, the applicant shall use the native biological community in a nearby, similar stream that is unaffected by wastewater discharges. The Department shall consider all information generated as required in this rule and other relevant information. The evaluation shall consider benefits to the native aquatic biological community only.

(iii) Permit conditions: Upon determination by the Department that the discharge and mitigation measures (if any) will likely result in an overall environmental benefit, the Department shall include appropriate permit conditions to insure that the environmental benefits

are attained and continue. Such permit conditions may include but not be limited to:

(a) Maximum allowed effluent flows and pollutant loads;

(b) Requirements to maintain land ownership, easements, contracts, or other legally binding measures necessary to assure that mitigation measures, if any, remain in place and effective;

(c) Special operating conditions;

(d) Monitoring and reporting requirements; and

(e) Studies to evaluate the effectiveness of mitigation measures.

(B) **Constructed water course**: A mixing zone may be extended through a constructed water course and into a natural water course. For the purposes of this rule, a constructed water course is one that was constructed for irrigation, site drainage, or wastewater conveyance, and has the following characteristics:

(i) Irrigation flows, stormwater runoff, or wastewater flows have replaced natural streamflow regimes; and

(ii) The channel form is greatly simplified in lengthwise and cross sectional profiles; and

(iii) Physical and biological characteristics that differ significantly from nearby natural streams; and

(iv) A much lower diversity of aquatic species than found in nearby natural streams; and

(v) If the constructed water course is an irrigation canal, then it must have effective fish screens in place to qualify as a constructed water course.

(C) **Insignificant discharges**: Insignificant discharges are those that either by volume, pollutant characteristics, and/or temporary nature are expected to have little if any impact on beneficial uses in the receiving stream, and for which the extensive evaluations required for discharges to smaller streams are not warranted. For the purposes of this rule, only filter backwash discharges and underground storage tank cleanups are considered insignificant discharges.

(D) **Other requirements for alternate mixing zones**: The following are additional requirements for dischargers requesting an alternate mixing zone:

(i) Most discharges that qualify for an alternate mixing zone will extend through the receiving stream until a larger stream is reached, where thorough mixing of the effluent can occur and where the edge of the allowed mixing zone will be located. The portion of the mixing zone in the larger stream must meet all of the requirements of the standard mixing zone, including not blocking aquatic life passage; and

(ii) An alternate mixing zone shall not be granted if a municipal drinking water intake is located within the proposed mixing zone, and the discharge has a significant adverse impact on the drinking water source; and

(iii) The discharge will not pose an unreasonable hazard to the environment or pose a significant health risk, considering the likely pathways of exposure; and

(iv) The discharge shall not be acutely toxic to organisms passing through the mixing zone; and

(v) An alternate mixing zone shall not be granted if the substances discharged may accumulate in the sediments or bioaccumulate in aquatic life or wildlife to levels that adversely affect public health, safety, or welfare; aquatic life; wildlife; or other designated beneficial uses; and

(vi) In the event that the receiving stream is water quality limited, the requirements for discharges to water quality limited streams supersede this rule.

(5) Testing methods: The analytical testing methods for determining compliance with the water quality standards contained in this rule shall be in accordance with the most recent edition of **Standard Methods for the Examination of Water and Waste Water published jointly by the American Public Health Association, American water Works Association, and Water Pollution Control Federation,** unless the Department has published an applicable superseding method, in which case testing shall be in accordance with the superseding method; provided, however, that testing in accordance with an alternative method shall comply with this rule if the Department has published the method or has approved the method in writing.

[**Publications:** Publication(s) referred to or incorporated by reference in this rule are available from the office of the Department of Environmental Quality.]

Stat. Auth.: ORS 468B.035 & 468.735; ORS 468B.048
Stat. Implemented: ORS 468B.048
Hist.: DEQ 128, f. & ef. 1-21-77; DEQ 1-1980, f. & ef. 1-9-80; DEQ 18-1987, f. & ef. 9-4-87; DEQ 14-1991, f. & cert. ef. 8-13-91; DEQ 17-1992, f. & cert. ef. 8-7-92 (and corrected 8-13-92)

Minimum Design Criteria for Treatment and Control of Wastes

340-41-455 Subject to the implementation program set forth in OAR 340-41-120, prior to discharge of any wastes from any new or modified facility to any waters of the Willamette River Basin, such wastes shall be treated and controlled in facilities designed in accordance with the following minimum criteria. (In designing treatment facilities, average conditions and a normal range of variability are generally used in establishing design criteria. A facility once completed and placed in operation should operate at or near the design limit most of the time but may operate below the design criteria limit at times due to variables which are unpredictable or uncontrollable. This is particularly true for biological treatment facilities. The actual operating limits are intended to be established by permit pursuant to ORS 468.740 and recognize that the actual performance level may at times be less than the design criteria).

(1) Sewage wastes:

(a) Willamette River and tributaries except Tualatin River Subbasin:

(A) During periods of low stream flows (approximately May 1 to October 31): Treatment resulting in monthly average effluent concentra-tions not to exceed 10 mg/l of BOD and 10 mg/l of SS or equivalent control;

(B) During the period of high stream flows (approximately November 1 to April 30): A minimum of secondary treatment or equivalent control and unless otherwise specifically authorized by the Department, operation of all waste treatment and control facilities at maximum practical efficiency and effectiveness so as to minimize waste discharges to public waters.

(b) Main stem Tualatin River from mouth to Gaston (river mile 0 to 65):

(A) During periods of low stream flows (approximately May 1 to October 31): Treatment resulting in monthly average effluent concentra-tions not to exceed 10 mg/l of BOD and 10 mg/l of SS or equivalent control;

(B) During the period of high stream flows (approximately November 1 to April 30): Treatment resulting in monthly average effluent concentra-tions not to exceed 20 mg/l of BOD and 20 mg/l of SS or equivalent control.

(c) Main stem Tualatin River above Gaston (river mile 65) and all tributaries to the Tualatin River: Treatment resulting in monthly average effluent concentrations not to exceed 5 mg/l of BOD and 5 mg/l of SS or equivalent control;

(d) Tualatin River Subbasin: The dissolved oxygen level in the discharged effluents shall not be less than 6 mg/l;

(e) Main stem Columbia River:

(A) During summer (May 1 to October 31): Treatment resulting in monthly average effluent concentrations not to exceed 20 mg/l of BOD and 20 mg/l of SS or equivalent control;

(B) During winter (November 1 to April 30): A minimum of secondary treatment or equivalent control and unless otherwise specifically authorized by the Department, operation of all waste treatment and control facilities at maximum practicable efficiency and effectiveness so as to minimize waste discharges to public waters.

(f) Effluent BOD concentrations in mg/l, divided by the dilution factor (ratio of receiving stream flow to effluent flow) shall not exceed one unless otherwise specifically approved by the Environ-mental Quality Commission;

(g) Sewage wastes shall be disinfected, after treatment, equivalent to thorough mixing with sufficient chlorine to provide a residual of at least one part per million after 60 minutes of contact time unless otherwise specifically authorized by permit;

(h) Positive protection shall be provided to prevent bypassing raw or inadequately treated sewage to public waters unless otherwise approved by the Department where elimination of inflow and infiltration would be necessary but not presently practicable;

(i) More stringent waste treatment and control requirements may be imposed where special conditions may require.

(2) Industrial wastes:

(a) After maximum practicable inplant control, a minimum of secondary treatment or equivalent control (reduction of suspended solids and organic material where present in significant quantities, effective disinfection where bacterial organisms of public health significance are present, and control of toxic or other deleterious substances);

(b) Specific industrial waste treatment requirements shall be determined on an individual basis in accordance with the provisions of this plan, applicable federal requirements, and the following:

(A) The uses which are or may likely be made of the receiving stream;

(B) The size and nature of flow of the receiving stream;

(C) The quantity and quality of wastes to be treated; and

(D) The presence or absence of other sources of pollution on the same watershed.

(c) Where industrial, commercial, or agricul-tural effluents contain significant quantities of potentially toxic elements, treatment requirements shall be determined utilizing appropriate bioassays;

(d) Industrial cooling waters containing significant heat loads shall be subjected to offstream cooling or heat recovery prior to discharge to public waters;

(e) Positive protection shall be provided to prevent bypassing of raw or inadequately treated industrial wastes to any public waters;

(f) Facilities shall be provided to prevent and contain spills of potentially toxic or hazardous materials and a positive program for containment and cleanup of such spills should they occur shall be developed and maintained.

(3) Nonpoint source pollution control in the Tualatin River subbasin and lands draining to Oswego Lake:

(a) Subsection (3)(b) of this rule shall apply to any new land development within the Tualatin River and Oswego Lake subbasins, except those developments with application dates prior to

January 1, 1990. The application date shall be the date on which a complete application for develop-ment approval is received by the local jurisdiction in accordance with the regulations of the local jurisdiction;

(b) For land development, no preliminary plat, site plan, permit or public works project shall be approved by any jurisdiction in these subbasins unless the conditions of the plat permit or plan approval includes an erosion control plan containing methods and/or interim facilities to be constructed or used concurrently with land development and to be operated during construction to control the discharge of sediment in the stormwater runoff. The erosion control plan shall utilize:

(A) Protection techniques to control soil erosion and sediment transport to less than one ton per acre per year, as calculated using the Soil Conservation Service Universal Soil Loss Equation or other equivalent methods. See **Figures 1** to **6** in **Appendix 1** for examples. The erosion control plan shall include temporary sedimentation basins or other sediment control devices when, because of steep slopes or other site specific considerations, other on-site sediment control methods will not likely keep the sediment transport to less than one ton per acre per year. The local jurisdictions may establish additional requirements for meeting an equivalent degree of control. Any sediment basins constructed shall be sized using 1.5 feet minimum sediment storage depth plus 2.0 feet storage depth above for a settlement zone. The storage capacity of the basin shall be sized to store all of the sediment that is likely to be transported and collected during construction while the erosion potential exists. When the erosion potential has been removed, the sediment basin, or other sediment control facilities, can be removed and the site restored as per the final site plan. All sediment basins shall be constructed with an emergency overflow to prevent erosion or failure of the containment dike; or

(B) A soil erosion control matrix derived from and consistent with the universal soil equation approved by the jurisdiction or the Department.

(c) The Director may modify **Appendix 1** as necessary without approval from the Environmental Quality Commission. The Director may modify **Appendix 1** to simplify it and to make it easier for people to apply;

(d) Subsection (3)(e) of this rule shall apply to any new land development within the Tualatin River and Oswego Lake subbasins, except:

(A) Those developments with application dates prior to June 1, 1990. The application date shall be the date on which a complete application for development approval is received by the local jurisdiction in accordance with the regulations of the local jurisdiction;

(B) One and two family dwellings on existing lots of record;

(C) Sewer lines, water lines, utilities or other land development that will not directly increase nonpoint source pollution once construction has been completed and the site is either restored to or not altered from its approximate original condition;

(D) If the Environmental Quality Commission determines that a jurisdiction does not need to require stormwater quality control facilities for new development;

(E) When a jurisdiction adopts ordinances that provide for a stormwater quality program equivalent to subsection (e) of this section. Ordinances adopted to implement equivalent programs shall:

(i) Encourage on-site retention of stormwater, require phosphorus removal equivalent to the removal efficiency required by subsection (e) of this section, provide for adequate operation and maintenance of stormwater quality control facilities, and require financial assurance, or equivalent security that assures construction of the stormwater quality control facilities required by the ordinance;

(ii) If the ordinances provide for exemptions other than those allowed for by paragraphs (B) and (C) of this subsection, the ordinances shall provide for collection of in-lieu fees or other equivalent mechanisms that assure financing for and construction of associated, off-site stormwater quality control facilities. No exemption shall be allowed if the jurisdiction is not meeting an approved schedule for identifying location of the off-site stormwater quality control facility to serve the development requesting an exemption.

(e) For new development, no plat, site plan, building permit or public works project shall be approved by any jurisdiction in these subbasins unless the conditions of the plat, permit or plan approval require permanent stormwater quality control facilities to control phosphorus loadings associated with stormwater runoff from the development site. Jurisdictions shall encourage and provide preference to techniques and methods that prevent and minimize pollutants from entering the storm and surface water systems. Permanent stormwater quality control facilities for phosphorus shall meet the following requirements:

(A) The stormwater quality control facilities shall be designed to achieve a phosphorus removal efficiency as calculated from the following equation:
$R_p = 100 - 24.5/R_v$ Where: R_p = Required phosphorus removal efficiency; R_v = Average site runoff coefficient

The average site runoff coefficient can be calculated from the following equation:
$R_v = (0.7 \times A_1) + (0.3 \times A_2) + (0.7 \times A_3) + (0.05 \times A_4) + (A_5 \times 0.0)$
Where: A_1 = fraction of total area that is paved streets with curbs and that drain to storm sewers or open ditches. A_2 = fraction of total area that is paved streets that drain to water quality swales located on site. A_3 = fraction of total area that is building roof and paved parking that drains to storm sewers. A_4 = fraction of total area that is grass, trees and marsh areas. A_5 = fraction of total area for which runoff will be collected and retained on site with no direct discharge to surface waters.

(B) A jurisdiction may modify the equation for R_v to allow the application of additional runoff coefficients associated with land surfaces not identified in this subsection. The Department shall be notified in writing whenever an additional runoff coefficient is used. The use of additional runoff coefficients shall be based on scientific data. The jurisdiction shall discontinue use of an additional runoff coefficient if the Department objects to its use in writing within ten days of receiving notification;

(C) The stormwater quality control facilities shall be designed to meet the removal efficiency specified in paragraph (A) of this subsection for a mean summertime storm event totaling 0.36 inches of precipitation with an average return period of 96 hours;

(D) The removal efficiency specified in paragraph (A) of this subsection specify only design requirements and are not intended to be used as a basis for performance evaluation or compliance determination of the stormwater quality control facility installed or constructed pursuant to this subsection;

(E)Stormwater quality control facilities required by this subsection shall be approved by a jurisdiction only if the following are met:

(i) For developments larger than one acre, the plat or site plan shall include plans and a certification prepared by an Oregon registered, professional engineer that the proposed stormwater control facilities have been designed in accordance with criteria expected to achieve removal efficiencies for total phosphorus required by paragraph (A) of this subsection;

(ii) The plat or site plan shall be consistent with the area and associated runoff coefficients

used to determine the removal efficiency required in paragraph (A)of this subsection;

(iii) A financial assurance, or equivalent security acceptable to the jurisdiction, shall be provided by the developer with the jurisdiction that assures that the stormwater control facilities are constructed according to the plans established in the plat or site plan approval. Where practicable, the jurisdiction shall combine the financial assurance required by this rule with other financial assurance requirements imposed by the jurisdiction;

(iv) Each jurisdiction which constructs or authorizes construction of permanent stormwater quality control facilities, shall file with the Department, an operation and maintenance plan for the stormwater quality control facilities within its jurisdiction. The operation and maintenance plan shall allow for public or private ownership, operation, and maintenance of individual permanent stormwater quality control facilities. The jurisdiction or private operator shall operate and maintain the permanent stormwater control facilities in accordance with the operation and maintenance plan.

(f) Except as required by paragraph (D) of this subsection, the jurisdiction may grant an exception to subsection (e) of this section if the jurisdiction chooses to adopt and, on a case-by-case basis, impose a one time in-lieu fee. The fee will be an option where, because of the size of the development, topography, or other factors, the jurisdiction determines that the construction of on-site permanent stormwater treatment systems is impracticable or undesirable:

(A) The in-lieu fee shall be based upon a reasonable estimate of the current, prorated cost for the jurisdiction to provide stormwater quality control facilities for the land development being assessed the fee. Estimated costs shall include costs associated with off-site land and rights-of-way acquisition, design, construction and construction inspection;

(B) The jurisdiction shall deposit any in-lieu fees collected pursuant to this paragraph in an account dedicated only to reimbursing the jurisdiction for expenses related to off-site land and rights-of-way acquisition, design, construction and construction inspection of stormwater quality control facilities;

(C) The ordinance establishing the in-lieu fee shall include provisions that reduce the fee in proportion to the ratio of the site's average runoff coefficient (R_v), as established according to the equation in paragraph (3)(e)(A) of this rule;

(D) No new development shall be granted an exemption if the jurisdiction is not meeting an approved time schedule for identifying the location for the off-site stormwater quality control facilities that would serve that development.

(g) The Department may approve other mechanisms that allow jurisdictions to grant exemptions to new development. The Department shall only approve those mechanisms that assure financing for off-site stormwater quality control facilities and that encourage or require on-site retention where feasible;

(h) Subsection (b) of this section shall apply until a jurisdiction adopts ordinances that provide for a program equivalent to subsection (b) of this section, or the Environmental Quality Commission determines such a program is not necessary when it approves the jurisdiction's program plan required by OAR 340-41-470(3)(g).

Stat. Auth.: ORS Ch. 468
Hist.: DEQ 128, f. & ef. 1-21-77; DEQ 16-1989, f. & cert. ef. 7-31-89 (and corrected 8-3-89); DEQ 30-1989, f. & cert. ef. 12-14-89

Special Policies and Guidelines
340-41-470

(1) In order to preserve the existing high quality water for municipal water supplies and recreation, it is the policy of the EQC to prohibit any new or increased waste discharges to the waters of:

(a) The Clackamas River Subbasin;

(b) The McKenzie River Subbasin above the Hayden Bridge (river mile 15);

(c) The North Santiam River Subbasin.

(2)Except as otherwise provided for in this rule, this rule becomes effective and applies to all permits pending or applied for after the date of filing with the Secretary of State. For the purposes of sections (1) through (7) of this rule, the following definitions apply:

(a)``Waste Discharges" are defined to mean any discharge that requires an NPDES permit, WPCF permit, or 401 Certification. Individual on-site sewage disposal systems subject to issuance of a construction-installation permit; domestic sewage facilities that discharge less than 5,000 gallons per day under a WPCF permit; biosolids land applied within agronomic loading rates pursuant to OAR Chapter 340, Division 50; and reclaimed domestic wastewater land applied at agronomic rates pursuant to OAR Chapter 340, Division 55 are excluded from this definition.

(b)``Existing Discharges" are defined as those discharges from point sources which existed prior to January 28, 1994;

(c)``Existing Facilities" are defined as those for which construction started prior to January 28, 1994. Where existing facilities are exempted from requirements placed on new facilities, the exemption applies only to the specific permit(s) addressed in the subsection which allows the exemption;

(d)``New" NPDES and WPCF permits are defined to include permits for potential or existing discharges which did not previously have a permit, and existing discharges which have a permit, but request an increased load limitation;

(e)``Agronomic Loading Rate" means the application of biosolids or reclaimed effluent to the land at a rate which is designed to:

(A)Provide the quantity of plant nutrients, usually nitrogen, needed by a food crop, feed crop, fiber crop, cover, crop or other vegetation grown on the land; and

(B)To minimize the quantity of nitrogen or other nutrients from the land applied materials that passes below the root zone of the crop or vegetation grown on the land to groundwater.

(f)``Biosolids" means solids derived from primary, secondary, or advanced treatment of domestic wastewater which have been treated through one or more controlled processes that significantly reduce pathogens and reduce volatile solids or chemical stabilize solids to the extent that they do not attract vectors. This term refers to domestic wastewater treatment facility solids that have undergone adequate treatment to permit their land application;

(g)``Reclaimed Wastewater" means treated effluent from a domestic wastewater treatment system which, as a result of treatment, is suitable for a direct beneficial purpose or a controlled use that could not otherwise occur.

(3)To respond to emergencies or to otherwise avoid imminent serious danger to public health or welfare, the Director or a designee may allow lower water quality on a short-term basis.

(4)The Director or a designee may renew or transfer NPDES and WPCF permits for existing facilities. Existing facilities with NPDES permits may not be granted increases in their permitted mass load limitations. The following restrictions and exceptions apply:

(a)The Department shall conduct an inspection prior to permit renewal. Existing sources with general permits who are found not to qualify for a general permit, and who wish to continue discharging, shall be required to apply for an individual permit;

(b)Fish hatcheries (General Permit 300) and log ponds (General Permit 400) shall be required to apply for an individual permit at the time of permit renewal;

(c)Additional industrial, confined animal feeding operation, or domestic waste loads that are irrigated on land at agronomic rates or that otherwise meet the conditions of section (7) of this rule shall not be considered an increase in the permitted wasteload.

(5)The Director or a designee may issue the following General Permits or Certifications subject to the conditions of the Permit or Certification:

(a)Storm water construction activities (General Permits 1200C and 1200CA);

(b)Underground storage tank cleanups using best available treatment technology (General Permit 1500);

(c)Non-contact cooling water (General Permit 100);

(d)Filter backwash (General Permit 200);

(e)Boiler blowdown water (General Permit 500);

(f)Suction dredging (General Permit 700) only in portions of the basins that are not designated as Scenic Waterways under ORS 390.805 to 390.925;

(g)Federal Clean Water Act Section 401 water quality certifications.

(6)Long-term general and individual storm water permits may be allowed as required by State and/or Federal law. The following requirements apply:

(a)New storm water discharge permittees shall maintain a monitoring and water quality evaluation program which is effective in evaluation of the in-stream water quality impacts of the discharge; and

(b)When sufficient data is available to do so, the Department shall assess the water quality impacts of storm water discharges. Within a subbasin, if the proportion of total degradation that is contributed by storm water is determined to be significant compared to that of other permitted sources, or if the Department determines that reducing degradation due to storm water is cost-effective when compared to other available pollution control options, the Department may institute regulatory mechanisms or modify permit conditions to require control technologies and/or practices which result in protection that is greater than that required statewide.

(7)Industrial waste discharge sources, confined animal feeding operations, and domestic sewage treatment facilities shall meet the following conditions:

(a)No NPDES permits for new industrial or new confined animal feeding operation waste discharges, or new domestic sewage treatment facilities shall be issued, except as allowed under sections (3), (4), (5), and (6) of this rule;

(b)The Department may issue WPCF permits for new industrial or confined animal feeding operation waste discharges provided:

(A)There is no waste discharge to surface water; and

(B)All groundwater quality protection requirements of OAR 340-40-030 are met. Neither the Department nor the Commission shall grant a concentration limit variance as provided in OAR 340-40-030, unless the Commission finds that all appropriate groundwater quality protection requirements and compliance monitoring are met and there will be no measurable change in the water quality of the surface water that would be potentially affected by the proposed facility. For any variance request, a public hearing shall be held prior to Commission action on the request.

(c)The Department may issue WPCF permits for new domestic sewage treatment facilities provided there is no waste discharge to surface water and provided:

(A)All groundwater quality protection requirements of OAR 340-40-030 are met. Neither the Department nor the Commission shall grant a concentration limit variance as provided in OAR

340-40-030, unless the Commission finds that all appropriate groundwater quality protection requirements and compliance monitoring are met and there will be no measurable change in the water quality of the surface water that would be potentially affected by the proposed facility. For any variance request, a public hearing shall be held and the permit application will be evaluated according to paragraphs (B) and (C) of this subsection;

(B)The Commission finds that the proposed, new domestic sewage treatment facility provides a preferable means of sewage collection, treatment and disposal as compared to individual on-site sewage disposal systems. To be preferable, the Commission shall find that one of the following criteria applies:

(i)The new sewage treatment facility will eliminate a significant number of failing individual on-site sewage disposal systems that cannot be otherwise reliably and cost-effectively repaired; or

(ii)The new sewage treatment facility will treat domestic sewage that would otherwise be treated by individual on-site sewage disposal systems, from which the cumulative impact to groundwater is projected to be greater than that from the new facility; or

(iii)If an individual on-site sewage disposal system, or several such systems, would not normally be utilized, a new sewage treatment facility may be allowed if the Commission finds that the social and economic benefits of the discharge outweigh the possible environmental impacts.

(C)Applicants for domestic wastewater WPCF permits must meet the following requirements:

(i)Application must be for an individual permit; and

(ii)The proposed discharge must not include wastes that incapacitate the treatment system; and

(iii)The facility must be operated or supervised by a certified wastewater treatment plant operator as required in OAR 340-49-015, except as exempted by ORS 448.430; and

(iv)Annual written certification of proper treatment and disposal system operation shall be obtained from a qualified Registered Sanitarian, Professional Engineer, or certified wastewater treatment system operator.

(8) The Environmental Quality Commission shall investigate, together with any other affected state agencies, the means of maintaining at least existing minimum flow during the summer low flow period.

(9) In order to improve water quality within the Tualatin River subbasin to meet the existing water quality standard for dissolved oxygen, and the 15 ug/1 chlorophyll *a* action level stated in OAR 340-41-150, the following special rules for total maximum daily loads, waste load allocations, load allocations, and implementation plans are established:

(a) After completion of wastewater control facilities and implementation of management plans approved by the Commission under this rule and no later than June 30, 1993, no activities shall be allowed and no wastewater shall be discharged to the Tualatin River or its tributaries without the specific authorization of the Commission that cause the monthly median concentration of total phosphorus at the mouths of the tributaries listed below and the specified points along the main-stream of the Tualatin River, as measured during the low flow period between May 1 and October 31*, of each year, unless otherwise specified by the Department, to exceed the following criteria:

Mainstream (RM)	ug/1	Tributaries	ug/1
Cherry Grove (67.8)	20	Scoggins Cr.	60

Dilley (58.8)	40	Gales Cr.	45
Golf Course Rd. (52.8)	45	Dairy Cr.	45
Rood Rd. (38.5)	50	McKay Cr.	45
Farmington (33.3)	70	Rock Cr.	70
Elsner (16.2)	70	Fanno Cr.	70
Stafford (5.4)	70	Chicken Cr.	70

(b) After completion of wastewater control facilities and implementation of management plans approved by the Commission under this rule and no later than June 30, 1993, no activities shall be allowed and no wastewater shall be discharged to the Tualatin River or its tributaries without the specific authorization of the Commission that cause the monthly median concentration of ammonia-nitrogen at the mouths of the tributaries listed below and the specified points along the mainstream of the Tualatin River, as measured between May 1 and November 15*, of each year, unless otherwise specified by the Department, to exceed the following target concentrations:

Mainstream (RM)	ug/1	Tributaries	ug/1
Cherry Grove (67.8)	30	Scoggins Cr.	30
Dilley (58.8)	30	Gales Cr.	40
Golf Course Rd. (52.8)	40	Dairy Cr.	40
Rood Rd. (38.5)	50	McKay Cr.	40
Farmington (33.3)	1000	Rock Cr.	100
Elsner (16.2)	850	Fanno Cr.	100
Stafford (5.4)	850	Chicken Cr.	100

(c) The sum of tributary load allocations and waste load allocations for total phosphorus and ammonia-nitrogen can be converted to pounds per day by multiplying the instream criteria by flow in the tributary in cfs and by the conversion factor 0.00539. The sum of load allocations waste load allocations for existing or future nonpoint sources and point source discharges to the mainstream Tualatin River not allocated in a tributary load allocation or waste load allocation may be calculated as the difference between the mass (criteria multiplied by flow) leaving a segment minus the mass entering the segment (criteria multiplied by flow) from all sources plus instream assimilation;

(d) The waste load allocation (WLA) for total phosphorus and ammonia-nitrogen for Unified Sewerage Agency of Washington County is determined by subtracting the sum of the calculated load at Rood Road and Rock Creek from the calculated load at Farmington;

(e) Subject to the approval of the Environ-mental Quality Commission, the Director may modify existing waste discharge permits for the Unified Sewerage Agency of Washington County and allow temporary additional waste discharges to the Tualatin River provided the Director finds that facilities allowed by the modified permit are not inconsistent and will not impede compliance with the June 30, 1993 date for final compliance and the Unified Sewerage Agency is in compliance with the Commission approved program plan;

(f) Within 90 days of the adoption of these rules, the Unified Sewerage Agency of Washington County shall submit a program** plan and time schedule to the Department describing how and when the Agency will modify its sewerage facilities to comply with this rule. The program plan shall include provisions and time schedule for developing and implementing a management plan under an agreement with the Lake Oswego Corporation for addressing nuisance algal growth in Lake Oswego;

(g) Within 18 months after the adoption of these rules, Washington, Clackamas, Multnomah Counties and all incorporated cities within the Tualatin River and Oswego Lake subbasins shall

submit to the Department a program plan** for controlling the quality of urban storm runoff within their respective jurisdictions to comply with the requirements of subsections (a) and (b) of this section;

(h) After July 1, 1989, Memorandums of Agreements between the Departments of Forestry and Agriculture and the Department of Environmental Quality shall include a time schedule for submitting a program plan** for achieving the requirements of subsections (a) and (b) of this section. The program plans shall be submitted to the Department within 18 months of the adoption of this rule;

(i) Within 120 days of submittal of the program plans** and within 60 days of the public hearing, the Environmental Quality Commission shall either approve or reject the plan. If the Commission rejects the plan, it shall specify a compliance schedule for resubmittal for approval and shall specify the reasons for the rejection. If the Commission determines that an agency has not made a good faith effort to provide an approvable plan within a reasonable time, the Commission may invoke appropriate enforcement action as allowed under law. The Commission shall reject the plan if it determines that the plan will not meet the requirements of this rule within a reasonable amount of time. Before approving a final program plan, the Commission shall reconsider and may revise the June 30, 1993 date stated in subsections (a), (b), and (e) of this section. Significant components of the program plans shall be inserted into permits or memorandums of agreement as appropriate;

(j) For the purpose of assisting local govern-ments in achieving the requirements of this rule, the Department shall:

(A) Within 90 days of the adoption of these rules, distribute initial waste load allocations and load allocations among the point source and nonpoint source management agencies in the basin. These allocations shall be considered interim and may be redistributed based upon the conclusions of the approved program plans;

(B) Within 120 days of the adoption of these rules, develop guidance to nonpoint source management agencies as to the specific content of the programs plans;

(C) Within 180 days of the adoption of these rules, propose additional rules for permits issued to local jurisdictions to address the control of storm water from new development within the Tualatin and Oswego Lake subbasins. The rules shall consider the following factors:

(i) Alternative control systems capable of complying with subsections (a) and (b) of this section;

(ii) Maintenance and operation of the control systems;

(iii) Assurance of erosion control during as well as after construction.

(D) In cooperation with the Department of Agriculture, within 180 days of the adoption of this rule develop a control strategy for addressing the runoff from container nurseries.

(10) In order to improve water quality within the Yamhill River subbasin to meet the existing water quality standard for pH, the following special rules for total maximum daily loads, waste load allocations, load allocations and program plans are established:

(a) After completion of wastewater control facilities and program plans approved by the Commission under this rule and no later than June 30, 1994, no activities shall be allowed and no wastewater shall be discharged to the Yamhill River or its tributaries without the authorization of the Commission that cause the monthly median concentration of total phosphorus to exceed 70 ug/1 as measured during the low flow period between approximately May 1 and October 31*** of each year;

(b) Within 90 days of adoption of these rules, the Cities of McMinnville and Lafayette shall

submit a program plan and time schedule to the Department describing how and when they will modify their sewerage facility to comply with this rule;

(c) Final program plans shall be reviewed and approved by the Commission. The Commission may define alternative compliance dates as program plans are approved. All proposed final program plans shall be subject to public hearing prior to consideration for approval by the Commission;

(d) The Department shall within 60 days of adoption of these rules distribute initial waste load allocations and load allocations to the point and nonpoint sources in the basin. These allocations shall be considered interim and may redistributed based upon the conclusions of the approved program plans.

*Precise dates for complying with this rule may be conditioned on physical conditions (i.e., flow, temperature) of the receiving water and shall be specified in individual permits or memorandums of understanding issued by the Department. The Department shall consider system design flows, river travel times, and other relevant information when establishing the specific conditions to be inserted in the permits or memorandums of understanding. Conditions shall be consistent with Commission-approved program plans** and the intent of this rule.
**For the purpose of this section of the rules, program plan is defined as the first level plan for developing a wastewater management system and describes the present physical and institutional infrastructure and the proposed strategy for changes including alternatives. A program plan should also include intergovernmental agreements and approvals, as appropriate; time schedules for accomplishing goals, including interim objectives; and a financing plan.
***Precise dates for complying with this rule may be conditioned on physical conditions (i.e., flow, temperature) of the receiving water and shall be specified in individual permits or memorandums of understanding issued by the Department. The Department shall consider system design flows, river travel times, and other relevant information when establishing the specific conditions to be inserted in the permits or memorandums of understanding.

Stat. Auth.: ORS 468.020
Hist.: DEQ 128, f. & ef. 1-21-77; DEQ 17-1988, f. & cert. ef. 7-13-88; DEQ 25-1988, f. & cert. ef. 9-16-88; DEQ 18-1989, f. & cert. ef. 7-31-89 (and corrected 8-3-89); DEQ 3-1994, f. & cert. ef. 2-2-94

Sandy Basin

Beneficial Water Uses to be Protected

340-41-482 Water quality in the Sandy River Basin (see **Figures 1** and **8**) shall be managed to protect the recognized beneficial uses as indicated in **Table 7**.

Stat. Auth.: ORS Ch. 468
Hist.: DEQ 128, f. & ef. 1-21-77; DEQ 9-1985, f. & ef. 8-6-85

Water Quality Standards Not to be Exceeded (To be Adopted Pursuant to ORS 468.735 and Enforceable Pursuant to ORS 468.720, 468.990, and 468.992)

340-41-485 (1) Notwithstanding the water quality standards contained below, the highest and best practicable treatment and/or control of wastes, activities, and flow shall in every case be provided so as to maintain dissolved oxygen and overall water quality at the highest possible levels and water temperatures, coliform bacteria concentrations, dissolved chemical substances, toxic materials, radioactivity, turbidities, color, odor, and other deleterious factors at the lowest possible levels.

(2) No wastes shall be discharged and no activities shall be conducted which either alone or in combination with other wastes or activities will cause violation of the following standards in the waters of the Sandy River Basin:

(a) Dissolved oxygen (DO): The changes adopted by the Commission on January 11, 1996, become effective July 1, 1996. Until that time, the requirements of this rule that were in effect on January 10, 1996, apply:

(A) For waterbodies identified by the Department as providing salmonid spawning, during the periods from spawning until fry emergence from the gravels, the following criteria apply:

(i) The dissolved oxygen shall not be less than 11.0 mg/l. However, if the minimum intergravel dissolved oxygen, measured as a spatial median, is 8.0 mg/l or greater, then the DO criterion is 9.0 mg/l;

(ii) Where conditions of barometric pressure, altitude, and temperature preclude attainment of the 11.0 mg/l or 9.0 mg/l criteria, dissolved oxygen levels shall not be less than 95 percent of saturation.

(B) For waterbodies identified by the Department as providing salmonid spawning during the period from spawning until fry emergence from the gravels, the spatial median intergravel dissolved oxygen concentration shall not fall below 6.0 mg/l;

(C) A spatial median of 8.0 mg/l intergravel dissolved oxygen level shall be used to identify areas where the recognized beneficial use of salmonid spawning, egg incubation and fry emergence from the egg and from the gravels may be impaired and therefore require action by the Department. Upon determination that the spatial median intergravel dissolved oxygen concentration is below 8.0 mg/l, the Department may, in accordance with priorities established by the Department for evaluating water quality impaired waterbodies, determine whether to list the waterbody as water quality limited under the Section 303(d) of the Clean Water Act, initiate pollution control strategies as warranted, and where needed cooperate with appropriate designated management agencies to evaluate and implement necessary best management practices for nonpoint source pollution control;

(D) For waterbodies identified by the Department as providing cold-water aquatic life, the dissolved oxygen shall not be less than 8.0 mg/l as an absolute minimum. Where conditions of barometric pressure, altitude, and temperature preclude attainment of the 8.0 mg/l, dissolved oxygen shall not be less than 90 percent of saturation. At the discretion of the Department, when the Department determines that adequate information exists, the dissolved oxygen shall not fall below 8.0 mg/l as a 30-day mean minimum, 6.5 mg/l as a seven-day minimum mean, and shall not fall below 6.0 mg/l as an absolute minimum (**Table 21**);

(E) For waterbodies identified by the Department as providing cool-water aquatic life, the dissolved oxygen shall not be less than 6.5 mg/l as an absolute minimum. At the discretion of the Department, when the Department determines that adequate information exists, the dissolved oxygen shall not fall below 6.5 mg/l as a 30-day mean minimum, 5.0 mg/l as a seven-day minimum mean, and shall not fall below 4.0 mg/l as an absolute minimum (**Table 21**);

(F) For waterbodies identified by the Department as providing warm-water aquatic life, the dissolved oxygen shall not be less than 5.5 mg/l as an absolute minimum. At the discretion of the Department, when the Department determines that adequate information exists, the dissolved oxygen shall not fall below 5.5 mg/l as a 30-day mean minimum, and shall not fall below 4.0 mg/l as an absolute minimum (**Table 21**);

(b) Temperature: The changes adopted by the Commission on January 11, 1996, become effective July 1, 1996. Until that time, the requirements of this rule that were in effect on January 10, 1996, apply. The method for measuring the numeric temperature criteria specified in this rule is defined in OAR 340-41-006(54):

(A) To accomplish the goals identified in OAR 340-41-120(11), unless specifically allowed under a Department-approved surface water temperature management plan as required under OAR 340-41-026(3)(a)(D), no measurable surface water temperature increase resulting from anthropogenic activities is allowed:

(i) In a basin for which salmonid fish rearing is a designated beneficial use, and in which surface water temperatures exceed 64.0°F (17.8°C);

(ii) In the Columbia River or its associated sloughs and channels from the mouth to river mile 309 when surface water temperatures exceed 68.0°F (20.0°C);

(iii) In waters and periods of the year determined by the Department to support native salmonid spawning, egg incubation, and fry emergence from the egg and from the gravels in a basin which exceeds 55.0°F (12.8°C);

(iv) In waters determined by the Department to support or to be necessary to maintain the viability of native Oregon bull trout, when surface water temperatures exceed 50.0°F (10.0°C);

(v) In waters determined by the Department to be ecologically significant cold-water refugia;

(vi) In stream segments containing federally listed Threatened and Endangered species if the increase would impair the biological integrity of the Threatened and Endangered population;

(vii) In Oregon waters when the dissolved oxygen (DO) levels are within 0.5 mg/l or 10 percent saturation of the water column or intergravel DO criterion for a given stream reach or subbasin;

(viii) In natural lakes.

(B) An exceedance of the numeric criteria identified in subparagraphs (A)(i) through (iv) of this subsection will not be deemed a temperature standard violation if it occurs when the air temperature during the warmest seven-day period of the year exceeds the 90th percentile of the seven-day average daily maximum air temperature calculated in a yearly series over the historic record. However, during such periods, the anthropogenic sources must still continue to comply with their surface water temperature management plans developed under OAR 340-41-026(3)(a)(D);

(C) Any source may petition the Commission for an exception to subparagraphs (A)(i) through (viii) of this subsection for discharge above the identified criteria if:

(i) The source provides the necessary scientific information to describe how the designated beneficial uses would not be adversely impacted; or

(ii) A source is implementing all reasonable management practices or measures; its activity will not significantly affect the beneficial uses; and the environmental cost of treating the parameter to the level necessary to assure full protection would outweigh the risk to the resource.

(c) Turbidity (Nephelometric Turbidity Units, NTU): No more than a ten percent cumulative increase in natural stream turbidities shall be allowed, as measured relative to a control point immediately upstream of the turbidity causing activity. However, limited duration activities necessary to address an emergency or to accommodate essential dredging, construction or other legitimate activities and which cause the standard to be exceeded may be authorized provided all practicable turbidity control techniques have been applied and one of the following has been granted:

(A) Emergency activities: Approval coordinated by DEQ with the Department of Fish and Wildlife under conditions they may prescribe to accommodate response to emergencies or to protect public health and welfare;

(B) Dredging, Construction or other Legitimate Activities: Permit or certification authorized under terms of Section 401 or 404 (Permits and Licenses, Federal Water Pollution Control Act) or OAR 141-85-100 et seq. (Removal and Fill Permits, Division of State Lands), with limitations and conditions governing the activity set forth in the permit or certificate.

(d) pH (hydrogen ion concentration): pH values shall not fall outside the ranges identified in paragraphs (A), (B), and (C) of this subsection. The following exception applies: Waters impounded by dams existing on January 1, 1996, which have pHs that exceed the criteria shall not be considered in violation of the standard if the Department determines that the exceedance would not occur without the impoundment and that all practicable measures have been taken to bring the pH in the impounded waters into compliance with the criteria:

(A) Mainstem Columbia River (river miles 120 to 147): pH values shall not fall outside the range of 7.0 to 8.5;

(B) All other Basin waters (except Cascade lakes): pH values shall not fall outside the range of 6.5 to 8.5;

(C) Cascade lakes above 3,000 feet altitude: pH values shall not fall outside the range of 6.0 to 8.5.

(e) Bacteria standards:

(A) Numeric Criteria: Organisms of the coliform group commonly associated with fecal sources (MPN or equivalent membrane filtration using a representative number of samples) shall not exceed the criteria described in subparagraphs (i) and (ii) of this paragraph. Freshwaters:

(i) A 30-day log mean of 126 *E. coli* organisms per 100 ml, based on a minimum of five (5) samples;

(ii) No single sample shall exceed 406 *E. coli* organisms per 100 ml;

(B) Raw Sewage Prohibition: No sewage shall be discharged into or in any other manner be allowed to enter the waters of the State unless such sewage has been treated in a manner approved by the Department or otherwise allowed by these rules;

(C) Animal Waste: Runoff contaminated with domesticated animal wastes shall be minimized and treated to the maximum extent practicable before it is allowed to enter waters of the State;

(D) Effluent Limitations and Water Quality Limited Waterbodies: Effluent limitations to implement the criteria in this rule are found in OAR 340-41-120(12) through (16). Implementation of the criteria in this rule in water quality limited waterbodies is described in OAR 340-41-026(3)(a)(I) and OAR 340-41-120(17).

(f) Bacterial pollution or other conditions deleterious to waters used for domestic purposes, livestock watering, irrigation, bathing, or shellfish propagation, or otherwise injurious to public health shall not be allowed;

(g) The liberation of dissolved gases, such as carbon dioxide, hydrogen sulfide, or other gases, in sufficient quantities to cause objectionable odors or to be deleterious to fish or other aquatic life, navigation, recreation, or other reasonable uses made of such waters shall not be allowed;

(h) The development of fungi or other growths having a deleterious effect on stream bottoms, fish or other aquatic life, or which are injurious to health, recreation, or industry shall not be allowed;

(i) The creation of tastes or odors or toxic or other conditions that are deleterious to fish or other aquatic life or affect the potability of drinking water or the palatability of fish or shellfish shall not be allowed;

(j) The formation of appreciable bottom or sludge deposits or the formation of any organic or inorganic deposits deleterious to fish or other aquatic life or injurious to public health, recreation, or industry shall not be allowed;

(k) Objectionable discoloration, scum, oily sleek or floating solids, or coating of aquatic life with oil films shall not be allowed;

(l) Aesthetic conditions offensive to the human senses of sight, taste, smell, or touch shall not be allowed;

(m) Radioisotope concentrations shall not exceed maximum permissible concentrations (MPC's) in drinking water, edible fishes or shellfishes, wildlife, irrigated crops, livestock and dairy products, or pose an external radiation hazard;

(n) (A) The concentration of total dissolved gas relative to atmospheric pressure at the point of sample collection shall not exceed 110 percent of saturation, except when stream flow exceeds the ten-year, seven-day average flood. However, for Hatchery receiving waters and waters of less

than two feet in depth, the concentration of total dissolved gas relative to atmospheric pressure at the point of sample collection shall not exceed 105 percent of saturation;

(B) The Commission may modify the total dissolved gas criteria in the Columbia River for the purpose of allowing increased spill for salmonid migration. The Commission must find that:

(i) Failure to act would result in greater harm to salmonid stock survival through in-river migration than would occur by increased spill;

(ii) The modified total dissolved gas criteria associated with the increased spill provides a reasonable balance of the risk of impairment due to elevated total dissolved gas to both resident biological communities and other migrating fish and to migrating adult and juvenile salmonids when compared to other options for in-river migration of salmon;

(iii) Adequate data will exist to determine compliance with the standards; and

(iv) Biological monitoring is occurring to document that the migratory salmonid and resident biological communities are being protected.

(C) The Commission will give public notice and notify all known interested parties and will make provision for opportunity to be heard and comment on the evidence presented by others, except that the Director may modify the total dissolved gas criteria for emergencies for a period not exceeding 48 hours;

(D) The Commission may, at its discretion, consider alternative modes of migration.

(o) Total Dissolved Solids: Guide concentrations listed below shall not be exceeded unless otherwise specifically authorized by DEQ upon such conditions as it may deem necessary to carry out the general intent of this plan and to protect the beneficial uses set forth in OAR 340-41-482:

(A) Mainstem Columbia River (River Miles 120 to 147) — 200.0 mg/l;

(B) All Other Basin Waters — 100.0 mg/l.

(p) Toxic Substances:

(A) Toxic substances shall not be introduced above natural background levels in the waters of the state in amounts, concentrations, or combinations which may be harmful, may chemically change to harmful forms in the environment, or may accumulate in sediments or bioaccumulate in aquatic life or wildlife to levels that adversely affect public health, safety, or welfare; aquatic life; wildlife; or other designated beneficial uses;

(B) Levels of toxic substances shall not exceed the criteria listed in **Table 20** which were based on criteria established by EPA and published in **Quality Criteria for Water (1986)**, unless otherwise noted;

(C) The criteria in paragraph (B) of this subsection shall apply unless data from scientifically valid studies demonstrate that the most sensitive designated beneficial uses will not be adversely affected by exceeding a criterion or that a more restrictive criterion is warranted to protect beneficial uses, as accepted by the Department on a site specific basis. Where no published EPA criteria exist for a toxic substance, public health advisories and other published scientific literature may be considered and used, if appropriate, to set guidance values;

(D) Bio-assessment studies such as laboratory bioassays or instream measurements of indigenous biological communities, shall be conducted, as the Department deems necessary, to monitor the toxicity of complex effluents, other suspected discharges or chemical substances without numeric criteria, to aquatic life. These studies, properly conducted in accordance with standard testing procedures, may be considered as scientifically valid data for the purposes of paragraph (C) of this subsection. If toxicity occurs, the Department shall evaluate and implement measures necessary to reduce toxicity on a case-by-case basis.

(3) Where the naturally occurring quality parameters of waters of the Sandy Basin are outside the numerical limits of the above assigned water quality standards, the naturally occurring

water quality shall be the standard. However, in such cases special restrictions, described in OAR 340-41-026(3)(a)(C)(iii), apply to discharges that affect dissolved oxygen.

(4) Mixing Zones:

(a) The Department may allow a designated portion of a receiving water to serve as a zone of dilution for wastewaters and receiving waters to mix thoroughly and this zone will be defined as a mixing zone;

(b) The Department may suspend all or part of the water quality standards, or set less restrictive standards, in the defined mixing zone, provided that the following conditions are met:

(A) The water within the mixing zone shall be free of:

(i) Materials in concentrations that will cause acute toxicity to aquatic life as measured by a Department approved bioassay method. Acute toxicity is lethality to aquatic life as measured by a significant difference in lethal concentration between the control and 100 percent effluent in an acute bioassay test. Lethality in 100 percent effluent may be allowed due to ammonia and chlorine only when it is demonstrated on a case-by-case basis that immediate dilution of the effluent within the mixing zone reduces toxicity below lethal concentrations. The Department may on a case-by-case basis establish a zone of immediate dilution if appropriate for other parameters;

(ii) Materials that will settle to form objectionable deposits;

(iii) Floating debris, oil, scum, or other materials that cause nuisance conditions;

(iv) Substances in concentrations that produce deleterious amounts of fungal or bacterial growths.

(B) The water outside the boundary of the mixing zone shall:

(i) Be free of materials in concentrations that will cause chronic (sublethal) toxicity. Chronic toxicity is measured as the concentration that causes long-term sublethal effects, such as significantly impaired growth or reproduction in aquatic organisms, during a testing period based on test species life cycle. Procedures and end points will be specified by the Department in wastewater discharge permits;

(ii) Meet all other water quality standards under normal annual low flow conditions.

(c) The limits of the mixing zone shall be described in the wastewater discharge permit. In determining the location, surface area, and volume of a mixing zone area, the Department may use appropriate mixing zone guidelines to assess the biological, physical, and chemical character of receiving waters, and effluent, and the most appropriate placement of the outfall, to protect instream water quality, public health, and other beneficial uses. Based on receiving water and effluent characteristics, the Department shall define a mixing zone in the immediate area of a wastewater discharge to:

(A) Be as small as feasible;

(B) Avoid overlap with any other mixing zones to the extent possible and be less than the total stream width as necessary to allow passage of fish and other aquatic organisms;

(C) Minimize adverse effects on the indigenous biological community especially when species are present that warrant special protection for their economic importance, tribal significance, ecological uniqueness, or for other similar reasons as determined by the Department and does not block the free passage of aquatic life;

(D) Not threaten public health;

(E) Minimize adverse effects on other designated beneficial uses outside the mixing zone.

(d) The Department may request the applicant of a permitted discharge for which a mixing zone is required, to submit all information necessary to define a mixing zone, such as:

(A) Type of operation to be conducted;

(B) Characteristics of effluent flow rates and composition;

(C) Characteristics of low flows of receiving waters;

(D) Description of potential environmental effects;

(E) Proposed design for outfall structures.

(e) The Department may, as necessary, require mixing zone monitoring studies and/or bioassays to be conducted to evaluate water quality or biological status within and outside the mixing zone boundary;

(f) The Department may change mixing zone limits or require the relocation of an outfall if it determines that the water quality within the mixing zone adversely affects any existing beneficial uses in the receiving waters.

(g) **Alternate requirements for mixing zones**: For some existing or proposed discharges to some receiving streams, it may not be practicable to treat wastewater to meet instream water quality standards at the point of discharge or within a short distance from the point of discharge. Some of these discharges could be allowed without impairing the overall ecological integrity of the receiving streams, or may provide an overall benefit to the receiving stream. This section specifies the conditions and circumstances under which a mixing zone may be allowed by the Department that extends beyond the immediate area around a discharge point, or that extends across a stream width. An alternate mixing zone may be approved if the applicant demonstrates to the Department's satisfaction that the discharge (A) creates an overall environmental benefit, or (B) is to a constructed water course, or (C) is insignificant. The three circumstances under which alternate mixing zones may be established are described further below.

(A) **Overall environmental benefit**.

(i) Qualifying for alternate mixing zone based on overall environmental benefit: In order to qualify for an alternate mixing zone based on a finding of overall environmental benefit, the discharger must demonstrate to the Department's satisfaction the following:

(a) That all practical strategies have been or will be implemented to minimize the pollutant loads in the effluent; and

(b) For proposed increased discharges, the current actual discharge and mixing zone does not meet the requirements of a standard mixing zone; and

(c) Either that, on balance, an environmental benefit would be lost if the discharge did not occur, or that the discharger is prepared to undertake other actions that will mitigate the effect of the discharge to an extent resulting in a net environmental benefit to the receiving stream.

(d) For the purposes of this rule, the term "practical" shall include environmental impact, availability of alternatives, cost of alternatives, and other relevant factors.

(ii) Studies required and evaluation of studies: In order to demonstrate that, on balance, an environmental benefit will result from the discharge, the following information shall be provided by the applicant:

(a) The effluent flow and pollutant loads that are detected or expected in the effluent, by month, both average and expected worst case discharges. The parameters to be evaluated include at a minimum temperature, biochemical oxygen demand, total suspended solids, total dissolved solids, pH, settleable solids, e. coli bacteria, oil and grease, any pollutants listed in Table 20 of this rule division, and any pollutant for which the receiving stream has been designated by the Department as water quality limited; and

(b) Receiving stream flow, by month; and

(c) The expected impact of the discharge, by month, on the receiving stream for the entire proposed mixing zone area for all of the pollutants listed above. Included in this analysis shall be a comparison of the receiving stream water quality with the discharge and without the

discharge; and

(d) A description of fish, other vertebrate populations, and macroinvertebrates that reside in or are likely to pass through the proposed mixing zone, including expected location (if known), species identification, stage of development, and time of year when their presence is expected. For existing discharges, the applicant shall provide the same information for similar nearby streams that are unaffected by wastewater discharges. In addition, any threatened or endangered species in the immediate vicinity of the receiving stream shall be identified; and

(e) The expected impact of the discharge on aquatic organisms and/or fish passage, including any expected negative impacts from the effluent attracting fish where that is not desirable; and

(f) A description of the expected environmental benefits to be derived from the discharge or other mitigation measures proposed by the applicant, including but not limited to improvements in water quality, improvements in fish passage, and improvements in aquatic habitat. If the applicant proposes to undertake mitigation measures designed to provide environmental benefits (e.g., purchasing water or water conservation rights to increase stream flows or establishing stream cover to decrease temperature), the applicant shall describe the mitigation measures in detail, including a description of the steps it will take to ensure that the benefits of the mitigation measures are attained and are not lost or diminished over time.

(g) Some or all of the above study requirements may be waived by the Department, if the Department determines that the information is not needed. In the event that the Department does waive some or all of the above study requirements, the basis for waiving the requirements will be included in the permit evaluation report upon the next permit renewal or modification relating to the mixing zone.

(h) Upon request of the Department, the applicant shall conduct additional studies to further evaluate the impact of the discharge, which may include whole effluent toxicity testing, stream surveys for water quality, stream surveys for fish and other aquatic organisms, or other studies as specified by the Department.

(i) In evaluating whether an existing or proposed increase in an existing discharge would result in a net environmental benefit, the applicant shall use the native biological community in a nearby, similar stream that is unaffected by wastewater discharges. The Department shall consider all information generated as required in this rule and other relevant information. The evaluation shall consider benefits to the native aquatic biological community only.

(iii) Permit conditions: Upon determination by the Department that the discharge and mitigation measures (if any) will likely result in an overall environmental benefit, the Department shall include appropriate permit conditions to insure that the environmental benefits are attained and continue. Such permit conditions may include but not be limited to:

(a) Maximum allowed effluent flows and pollutant loads;

(b) Requirements to maintain land ownership, easements, contracts, or other legally binding measures necessary to assure that mitigation measures, if any, remain in place and effective;

(c) Special operating conditions;

(d) Monitoring and reporting requirements; and

(e) Studies to evaluate the effectiveness of mitigation measures.

(B) **Constructed water course**: A mixing zone may be extended through a constructed water course and into a natural water course. For the purposes of this rule, a constructed water course is one that was constructed for irrigation, site drainage, or wastewater conveyance, and

has the following characteristics:

(i) Irrigation flows, stormwater runoff, or wastewater flows have replaced natural streamflow regimes; and

(ii) The channel form is greatly simplified in lengthwise and cross sectional profiles; and

(iii) Physical and biological characteristics that differ significantly from nearby natural streams; and

(iv) A much lower diversity of aquatic species than found in nearby natural streams; and

(v) If the constructed water course is an irrigation canal, then it must have effective fish screens in place to qualify as a constructed water course.

(C) **Insignificant discharges**: Insignificant discharges are those that either by volume, pollutant characteristics, and/or temporary nature are expected to have little if any impact on beneficial uses in the receiving stream, and for which the extensive evaluations required for discharges to smaller streams are not warranted. For the purposes of this rule, only filter backwash discharges and underground storage tank cleanups are considered insignificant discharges.

(D) **Other requirements for alternate mixing zones**: The following are additional requirements for dischargers requesting an alternate mixing zone:

(i) Most discharges that qualify for an alternate mixing zone will extend through the receiving stream until a larger stream is reached, where thorough mixing of the effluent can occur and where the edge of the allowed mixing zone will be located. The portion of the mixing zone in the larger stream must meet all of the requirements of the standard mixing zone, including not blocking aquatic life passage; and

(ii) An alternate mixing zone shall not be granted if a municipal drinking water intake is located within the proposed mixing zone, and the discharge has a significant adverse impact on the drinking water source; and

(iii) The discharge will not pose an unreasonable hazard to the environment or pose a significant health risk, considering the likely pathways of exposure; and

(iv) The discharge shall not be acutely toxic to organisms passing through the mixing zone; and

(v) An alternate mixing zone shall not be granted if the substances discharged may accumulate in the sediments or bioaccumulate in aquatic life or wildlife to levels that adversely affect public health, safety, or welfare; aquatic life; wildlife; or other designated beneficial uses; and

(vi) In the event that the receiving stream is water quality limited, the requirements for discharges to water quality limited streams supersede this rule.

(5) Testing methods: The analytical testing methods for determining compliance with the water quality standards contained in this rule shall be in accordance with the most recent edition of **Standard Methods for the Examination of Water and Waste Water published jointly by the American Public Health Association, American Water Works Association, and Water Pollution Control Federation,** unless the Department has published an applicable superseding method, in which case testing shall be in accordance with the superseding method; provided, however, that testing in accordance with an alternative method shall comply with this rule if the Department has published the method or has approved the method in writing.

[**Publications:** The publication(s) referred to or incorporated by reference in this rule are available from the office of the Department of Environmental Quality.]

Stat. Auth.: ORS 468B.035 & 468.735 ORS 468B.048
Stat. Implemented: ORS 468B.048
Hist.: DEQ 128, f. & ef. 1-21-77; DEQ 1-1980, f. & ef. 1-9-80; DEQ 18-1987, f. & ef. 9-4-87; DEQ 14-1991, f. & cert. ef. 8-13-91; DEQ 17-1992, f. & cert. ef. 8-7-92 (and corrected 8-13-92)

Minimum Design Criteria for Treatment and Control of Wastes

340-41-495 Subject to the implementation program set forth in OAR 340-41-120, prior to discharge of any wastes from any new or modified facility to any waters of the Sandy River Basin, such wastes shall be treated and controlled in facilities designed in accordance with the following minimum criteria. (In designing treatment facilities, average conditions and a normal range of variability are generally used in establishing design criteria. A facility once completed and placed in operation should operate at or near the design limit most of the time but may operate below the design criteria limit at times due to variables which are unpredictable or uncontrollable. This is particularly true for biological treatment facilities. The actual operating limits are intended to be established by permit pursuant to ORS 468.740 and recognizes that the actual performance level may at times be less than the design criteria).

(1) Sewage wastes:

(a) Main Stem Columbia River (river miles 120 to 147):

(A) During periods of low stream flows (approximately July 1 to January 31): Treatment resulting in monthly average effluent concentra-tions not to exceed 20 mg/l of BOD and 20 mg/l of SS or equivalent control;

(B) During the period of high stream flows (approximately February 1 to June 30): A minimum of secondary treatment or equivalent control and unless otherwise specifically authorized by the Department, operation of all waste treatment and control facilities at maximum practicable efficiency and effectiveness so as to minimize waste discharges to public waters.

(b) All other Basin waters:

(A) During periods of low stream flows (approximately June 1 to October 31): Treatment resulting in monthly average effluent concentra-tions not to exceed 10 mg/l of BOD and 10 mg/l of SS or equivalent control;

(B) During the period of high stream flows (approximately November 1 to May 31): A minimum of secondary treatment or equivalent control and unless otherwise specifically authorized by the Department, operation of all waste treatment and control facilities at maximum practicable efficiency and effectiveness so as to minimize waste discharges to public waters.

(c) Effluent BOD concentrations in mg/l, divided by the dilution factor (ratio of receiving stream flow to effluent flow) shall not exceed one unless otherwise approved by the EQC;

(d) Sewage wastes shall be disinfected, after treatment, equivalent to thorough mixing with sufficient chlorine to provide a residual of at least one part per million after 60 minutes of contact time unless otherwise specifically authorized by permit;

(e) Positive protection shall be provided to prevent bypassing raw or inadequately treated sewage to public waters unless otherwise approved by the Department where elimination of inflow and infiltration would be necessary, but not presently practicable;

(f) More stringent waste treatment and control requirements may be imposed where special conditions may require.

(2) Industrial wastes:

(a) After maximum practicable inplant control, a minimum of secondary treatment or

equivalent control (reduction of suspended solids and organic material where present in significant quantities, effective disinfection where bacterial organisms of public health significance are present, and control of toxic or other deleterious substances);

(b) Specific industrial waste treatment requirements shall be determined on an individual basis in accordance with the provisions of this plan, applicable federal requirements, and the following:

(A) The uses which are or may likely be made of the receiving stream;

(B) The size and nature of flow of the receiving stream;

(C) The quantity and quality of wastes to be treated; and

(D) The presence or absence of other sources of pollution on the same watershed.

(c) Where industrial, commercial, or agricul-tural effluents contain significant quantities of potentially toxic elements, treatment requirements shall be determined utilizing appropriate bioassays;

(d) Industrial cooling waters containing significant heat loads shall be subjected to offstream cooling or heat recovery prior to discharge to public waters;

(e) Positive protection shall be provided to prevent bypassing of raw or inadequately treated industrial wastes to any public waters;

(f) Facilities shall be provided to prevent and contain spills of potentially toxic or hazardous materials and a positive program for containment and cleanup of such spills should they occur, shall be developed and maintained.

Stat. Auth.: ORS Ch. 468
Hist.: DEQ 128, f. & ef. 1-21-77

Hood Basin

Beneficial Water Uses to be Protected

340-41-522 Water quality in the Hood River Basin (see **Figures 1** and **9**) shall be managed to protect the recognized beneficial uses as indicated in **Table 8**.

Stat. Auth.: ORS Ch. 468
Hist.: DEQ 128, f. & ef. 1-21-77; DEQ 9-1985, f. & ef. 8-6-85

Water Quality Standards Not to be Exceeded (To be Adopted Pursuant to ORS 468.735 and Enforceable Pursuant to ORS 468.720, 468.990, and 468.992)

340-41-525 (1) Notwithstanding the water quality standards contained below, the highest and best practicable treatment and/or control of wastes, activities, and flows shall in every case be provided so as to maintain dissolved oxygen and overall water quality at the highest possible levels and water temperatures, coliform bacteria concentrations, dissolved chemical substances, toxic materials, radioactivity, turbidities, color, odor, and other deleterious factors at the lowest possible levels.

(2) No wastes shall be discharged and no activities shall be conducted which either alone or in combination with other wastes or activities will cause violation of the following standards in the waters of the Hood River Basin:

(a) Dissolved oxygen (DO): The changes adopted by the Commission on January 11, 1996, become effective July 1, 1996. Until that time, the requirements of this rule that were in effect on January 10, 1996, apply:

(A) For waterbodies identified by the Department as providing salmonid spawning, during the periods from spawning until fry emergence from the gravels, the following criteria apply:

(i) The dissolved oxygen shall not be less than 11.0 mg/l. However, if the minimum intergravel dissolved oxygen, measured as a spatial median, is 8.0 mg/l or greater, then the DO criterion is 9.0 mg/l;

(ii) Where conditions of barometric pressure, altitude, and temperature preclude attainment of the 11.0 mg/l or 9.0 mg/l criteria, dissolved oxygen levels shall not be less than 95 percent of saturation.

(B) For waterbodies identified by the Department as providing salmonid spawning during the period from spawning until fry emergence from the gravels, the spatial median intergravel dissolved oxygen concentration shall not fall below 6.0 mg/l;

(C) A spatial median of 8.0 mg/l intergravel dissolved oxygen level shall be used to identify areas where the recognized beneficial use of salmonid spawning, egg incubation and fry emergence from the egg and from the gravels may be impaired and therefore require action by the Department. Upon determination that the spatial median intergravel dissolved oxygen concentration is below 8.0 mg/l, the Department may, in accordance with priorities established by the Department for evaluating water quality impaired waterbodies, determine whether to list the waterbody as water quality limited under the Section 303(d) of the Clean Water Act, initiate pollution control strategies as warranted, and where needed cooperate with appropriate designated management agencies to evaluate and implement necessary best management practices for nonpoint source pollution control;

(D) For waterbodies identified by the Department as providing cold-water aquatic life, the dissolved oxygen shall not be less than 8.0 mg/l as an absolute minimum. Where conditions of barometric pressure, altitude, and temperature preclude attainment of the 8.0 mg/l, dissolved oxygen shall not be less than 90 percent of saturation. At the discretion of the Department, when the Department determines that adequate information exists, the dissolved oxygen shall not fall below 8.0 mg/l as a 30-day mean minimum, 6.5 mg/l as a seven-day minimum mean, and shall not fall below 6.0 mg/l as an absolute minimum (**Table 21**);

(E) For waterbodies identified by the Department as providing cool-water aquatic life, the dissolved oxygen shall not be less than 6.5 mg/l as an absolute minimum. At the discretion of the Department, when the Department determines that adequate information exists, the dissolved oxygen shall not fall below 6.5 mg/l as a 30-day mean minimum, 5.0 mg/l as a seven-day minimum mean, and shall not fall below 4.0 mg/l as an absolute minimum (**Table 21**);

(F) For waterbodies identified by the Department as providing warm-water aquatic life, the dissolved oxygen shall not be less than 5.5 mg/l as an absolute minimum. At the discretion of the Department, when the Department determines that adequate information exists, the dissolved oxygen shall not fall below 5.5 mg/l as a 30-day mean minimum, and shall not fall below 4.0 mg/l as an absolute minimum (**Table 21**);

(b) Temperature: The changes adopted by the Commission on January 11, 1996, become effective July 1, 1996. Until that time, the requirements of this rule that were in effect on January 10, 1996, apply. The method for measuring the numeric temperature criteria specified in this rule is defined in OAR 340-41-006(54):

(A) To accomplish the goals identified in OAR 340-41-120(11), unless specifically allowed under a Department-approved surface water temperature management plan as required under OAR 340-41-026(3)(a)(D), no measurable surface water temperature increase resulting from anthropogenic activities is allowed:

(i) In a basin for which salmonid fish rearing is a designated beneficial use, and in which surface water temperatures exceed 64.0°F (17.8°C);

(ii) In the Columbia River or its associated sloughs and channels from the mouth to river mile 309 when surface water temperatures exceed 68.0°F (20.0°C);

(iii) In waters and periods of the year determined by the Department to support native salmonid spawning, egg incubation, and fry emergence from the egg and from the gravels in a basin which exceeds 55.0°F (12.8°C);

(iv) In waters determined by the Department to support or to be necessary to maintain the viability of native Oregon bull trout, when surface water temperatures exceed 50.0°F (10.0°C);

(v) In waters determined by the Department to be ecologically significant cold-water refugia;

(vi) In stream segments containing federally listed Threatened and Endangered species if the increase would impair the biological integrity of the Threatened and Endangered population;

(vii) In Oregon waters when the dissolved oxygen (DO) levels are within 0.5 mg/l or 10 percent saturation of the water column or intergravel DO criterion for a given stream reach or subbasin;

(viii) In natural lakes.

(B) An exceedance of the numeric criteria identified in subparagraphs (A)(i) through (iv) of this subsection will not be deemed a temperature standard violation if it occurs when the air temperature during the warmest seven-day period of the year exceeds the 90th percentile of the seven-day average daily maximum air temperature calculated in a yearly series over the historic record. However, during such periods, the anthropogenic sources must still continue to comply with their surface water temperature management plans developed under OAR 340-41-026(3)(a)(D);

(C) Any source may petition the Commission for an exception to subparagraphs (A)(i) through (viii) of this subsection for discharge above the identified criteria if:

(i) The source provides the necessary scientific information to describe how the designated beneficial uses would not be adversely impacted; or

(ii) A source is implementing all reasonable management practices or measures; its activity will not significantly affect the beneficial uses; and the environmental cost of treating the parameter to the level necessary to assure full protection would outweigh the risk to the resource.

(c) Turbidity (Nephelometric Turbidity Units, NTU): No more than a ten percent cumulative increase in natural stream turbidities shall be allowed, as measured relative to a control point immediately upstream of the turbidity causing activity. However, limited duration activities necessary to address an emergency or to accommodate essential dredging, construction or other legitimate activities and which cause the standard to be exceeded may be authorized provided all practicable turbidity control techniques have been applied and one of the following has been granted:

(A) Emergency activities: Approval coordinated by DEQ with the Department of Fish and Wildlife under conditions they may prescribe to accommodate response to emergencies or to protect public health and welfare;

(B) Dredging, Construction or other Legitimate activities: Permit or certification authorized under terms of Section 401 or 404 (Permits and Licenses, Federal Water Pollution Control Act) or OAR 141-85-100 et seq. (Removal and Fill Permits, Division of State Lands), with limitations and conditions governing the activity set forth in the permit or certificate.

(d) pH (hydrogen ion concentration): pH values shall not fall outside the ranges identified in paragraphs (A), (B), and (C) of this subsection. The following exception applies: Waters impounded by dams existing on January 1, 1996, which have pHs that exceed the criteria shall not be considered in violation of the standard if the Department determines that the exceedance would not occur without the impoundment and that all practicable measures have been taken to bring the pH in the impounded waters into compliance with the criteria:

(A) Mainstem Columbia River (river miles 147 to 203): pH values shall not fall outside the range of 7.0 to 8.5;

(B) Other Hood River Basin streams (except Cascade lakes): pH values shall not fall outside the range of 6.5 to 8.5;

(C) Cascade lakes above 3,000 feet altitude: pH values shall not fall outside the range of 6.0 to 8.5.

(e) Bacteria standards:

(A) Numeric Criteria: Organisms of the coliform group commonly associated with fecal sources (MPN or equivalent membrane filtration using a representative number of samples) shall not exceed the criteria described in subparagraphs (i) and (ii) of this paragraph. Freshwaters:

(i) A 30-day log mean of 126 *E. coli* organisms per 100 ml, based on a minimum of five (5) samples;

(ii) No single sample shall exceed 406 *E. coli* organisms per 100 ml;

(B) Raw Sewage Prohibition: No sewage shall be discharged into or in any other manner be allowed to enter the waters of the State unless such sewage has been treated in a manner approved by the Department or otherwise allowed by these rules;

(C) Animal Waste: Runoff contaminated with domesticated animal wastes shall be minimized and treated to the maximum extent practicable before it is allowed to enter waters of the State;

(D) Effluent Limitations and Water Quality Limited Waterbodies: Effluent limitations to implement the criteria in this rule are found in OAR 340-41-120(12) through (16). Implementation of the criteria in this rule in water quality limited waterbodies is described in OAR 340-41-026(3)(a)(I) and OAR 340-41-120(17).

(f) Bacterial pollution or other conditions deleterious to waters used for domestic purposes, livestock watering, irrigation, bathing, or shellfish propogation, or otherwise injurious to public health shall not be allowed;

(g) The liberation of dissolved gases, such as carbon dioxide hydrogen sulfide, or other gases, in sufficient quantities to cause objectionable odors or to be deleterious to fish or other aquatic life, navigation, recreation, or other reasonable uses made of such water shall not be allowed;

(h) The development of fungi or other growths having a deleterious effect on stream bottoms, fish or other aquatic life, or which are injurious to health, recreation, or industry shall not be allowed;

(i) The creation of tastes or odors or toxic or other conditions that are deleterious to fish or other aquatic life or affect the potability of drinking water or the palatability of fish or shellfish shall not be allowed;

(j) The formation of appreciable bottom or sludge deposits or the formation of any organic or inorganic deposits deleterious to fish or other aquatic life or injurious to public health, recreation, or industry shall not be allowed;

(k) Objectionable discoloration, scum, oily sleek or floating solids, or coating of aquatic life with oil films shall not be allowed;

(l) Aesthetic conditions offensive to the human senses of sight, taste, smell, or touch shall not be allowed;

(m) Radioisotope concentrations shall not exceed maximum permissible concentrations (MPC's) in drinking water, edible fishes or shellfishes, wildlife, irrigated crops, livestock and dairy products, or pose an external radiation hazard;

(n) (A) The concentration of total dissolved gas relative to atmospheric pressure at the point of sample collection shall not exceed 110 percent of saturation, except when stream flow exceeds the ten-year, seven-day average flood. However, for Hatchery receiving waters and waters of less

than two feet in depth, the concentration of total dissolved gas relative to atmospheric pressure at the point of sample collection shall not exceed 105 percent of saturation;

(B) The Commission may modify the total dissolved gas criteria in the Columbia River for the purpose of allowing increased spill for salmonid migration. The Commission must find that:

(i) Failure to act would result in greater harm to salmonid stock survival through in-river migration than would occur by increased spill;

(ii) The modified total dissolved gas criteria associated with the increased spill provides a reasonable balance of the risk of impairment due to elevated total dissolved gas to both resident biological communities and other migrating fish and to migrating adult and juvenile salmonids when compared to other options for in-river migration of salmon;

(iii) Adequate data will exist to determine compliance with the standards; and

(iv) Biological monitoring is occurring to document that the migratory salmonid and resident biological communities are being protected.

(C) The Commission will give public notice and notify all known interested parties and will make provision for opportunity to be heard and comment on the evidence presented by others, except that the Director may modify the total dissolved gas criteria for emergencies for a period not exceeding 48 hours;

(D) The Commission may, at its discretion, consider alternative modes of migration.

(o) Total Dissolved Solids: Guide concentrations listed below shall not be exceeded unless otherwise specifically authorized by DEQ upon such conditions as it may deem necessary to carry out the general intent of this plan and to protect the beneficial uses set forth in OAR 340-41-522: 500.0 mg/l;

(p) Toxic Substances:

(A) Toxic substances shall not be introduced above natural background levels in the waters of the state in amounts, concentrations, or combinations which may be harmful, may chemically change to harmful forms in the environment, or may accumulate in sediments or bioaccumulate in aquatic life or wildlife to levels that adversely affect public health, safety, or welfare; aquatic life; wildlife; or other designated beneficial uses;

(B) Levels of toxic substances shall not exceed the criteria listed in **Table 20** which were based on criteria established by EPA and published in **Quality Criteria for Water (1986)**, unless otherwise noted;

(C) The criteria in paragraph (B) of this subsection shall apply unless data from scientifically valid studies demonstrate that the most sensitive designated beneficial uses will not be adversely affected by exceeding a criterion or that a more restrictive criterion is warranted to protect beneficial uses, as accepted by the Department on a site specific basis. Where no published EPA criteria exist for a toxic substance, public health advisories and other published scientific literature may be considered and used, if appropriate, to set guidance values;

(D) Bio-assessment studies such as laboratory bioassays or instream measurements of indigenous biological communities, shall be conducted, as the Department deems necessary, to monitor the toxicity of complex effluents, other suspected discharges or chemical substances without numeric criteria, to aquatic life. These studies, properly conducted in accordance with standard testing procedures, may be considered as scientifically valid data for the purposes of paragraph (C) of this subsection. If toxicity occurs, the Department shall evaluate and implement measures necessary to reduce toxicity on a case-by-case basis.

(3) Where the naturally occurring quality parameters of waters of the Hood River Basin are outside the numerical limits of the above assigned water quality standards, the naturally occurring water quality shall be the standard. However, in such cases special restrictions, described in OAR 340-41-026(3)(a)(C)(iii),apply to discharges that affect dissolved oxygen.

(4) Mixing zones:

(a) The Department may allow a designated portion of a receiving water to serve as a zone of dilution for wastewaters and receiving waters to mix thoroughly and this zone will be defined as a mixing zone;

(b) The Department may suspend all or part of the water quality standards, or set less restrictive standards, in the defined mixing zone, provided that the following conditions are met:

(A) The water within the mixing zone shall be free of:

(i) Materials in concentrations that will cause acute toxicity to aquatic life as measured by a Department approved bioassay method. Acute toxicity is lethality to aquatic life as measured by a significant difference in lethal concentration between the control and 100 percent effluent in an acute bioassay test. Lethality in 100 percent effluent may be allowed due to ammonia and chlorine only when it is demonstrated on a case-by-case basis that immediate dilution of the effluent within the mixing zone reduces toxicity below lethal concentrations. The Department may on a case-by-case basis establish a zone of immediate dilution if appropriate for other parameters;

(ii) Materials that will settle to form objectionable deposits;

(iii) Floating debris, oil, scum, or other materials that cause nuisance conditions;

(iv) Substances in concentrations that produce deleterious amounts of fungal or bacterial growths.

(B) The water outside the boundary of the mixing zone shall:

(i) Be free of materials in concentrations that will cause chronic (sublethal) toxicity. Chronic toxicity is measured as the concentration that causes long-term sublethal effects, such as significantly impaired growth or reproduction in aquatic organisms, during a testing period based on test species life cycle. Procedures and end points will be specified by the Department in wastewater discharge permits;

(ii) Meet all other water quality standards under normal annual low flow conditions.

(c) The limits of the mixing zone shall be described in the wastewater discharge permit. In determining the location, surface area, and volume of a mixing zone area, the Department may use appropriate mixing zone guidelines to assess the biological, physical, and chemical character of receiving waters, and effluent, and the most appropriate placement of the outfall, to protect instream water quality, public health, and other beneficial uses. Based on receiving water and effluent characteristics, the Department shall define a mixing zone in the immediate area of a wastewater discharge to:

(A) Be as small as feasible;

(B) Avoid overlap with any other mixing zones to the extent possible and be less than the total stream width as necessary to allow passage of fish and other aquatic organisms;

(C) Minimize adverse effects on the indigenous biological community especially when species are present that warrant special protection for their economic importance, tribal significance, ecological uniqueness, or for other similar reasons as determined by the Department and does not block the free passage of aquatic life;

(D) Not threaten public health;

(E) Minimize adverse effects on other designated beneficial uses outside the mixing zone.

(d) The Department may request the applicant of a permitted discharge for which a mixing zone is required, to submit all information necessary to define a mixing zone, such as:

(A) Type of operation to be conducted;

(B) Characteristics of effluent flow rates and composition;

(C) Characteristics of low flows of receiving waters;

(D) Description of potential environmental effects;

(E) Proposed design for outfall structures.

(e) The Department may, as necessary, require mixing zone monitoring studies and/or bioassays to be conducted to evaluate water quality or biological status within and outside the mixing zone boundary;

(f) The Department may change mixing zone limits or require the relocation of an outfall if it determines that the water quality within the mixing zone adversely affects any existing beneficial uses in the receiving waters.

(g) **Alternate requirements for mixing zones**: For some existing or proposed discharges to some receiving streams, it may not be practicable to treat wastewater to meet instream water quality standards at the point of discharge or within a short distance from the point of discharge. Some of these discharges could be allowed without impairing the overall ecological integrity of the receiving streams, or may provide an overall benefit to the receiving stream. This section specifies the conditions and circumstances under which a mixing zone may be allowed by the Department that extends beyond the immediate area around a discharge point, or that extends across a stream width. An alternate mixing zone may be approved if the applicant demonstrates to the Department's satisfaction that the discharge (A) creates an overall environmental benefit, or (B) is to a constructed water course, or (C) is insignificant. The three circumstances under which alternate mixing zones may be established are described further below.

(A) **Overall environmental benefit**.

(i) Qualifying for alternate mixing zone based on overall environmental benefit: In order to qualify for an alternate mixing zone based on a finding of overall environmental benefit, the discharger must demonstrate to the Department's satisfaction the following:

(a) That all practical strategies have been or will be implemented to minimize the pollutant loads in the effluent; and

(b) For proposed increased discharges, the current actual discharge and mixing zone does not meet the requirements of a standard mixing zone; and

(c) Either that, on balance, an environmental benefit would be lost if the discharge did not occur, or that the discharger is prepared to undertake other actions that will mitigate the effect of the discharge to an extent resulting in a net environmental benefit to the receiving stream.

(d) For the purposes of this rule, the term "practical" shall include environmental impact, availability of alternatives, cost of alternatives, and other relevant factors.

(ii) Studies required and evaluation of studies: In order to demonstrate that, on balance, an environmental benefit will result from the discharge, the following information shall be provided by the applicant:

(a) The effluent flow and pollutant loads that are detected or expected in the effluent, by month, both average and expected worst case discharges. The parameters to be evaluated include at a minimum temperature, biochemical oxygen demand, total suspended solids, total dissolved solids, pH, settleable solids, e. coli bacteria, oil and grease, any pollutants listed in Table 20 of this rule division, and any pollutant for which the receiving stream has been designated by the Department as water quality limited; and

(b) Receiving stream flow, by month; and

(c) The expected impact of the discharge, by month, on the receiving stream for the entire proposed mixing zone area for all of the pollutants listed above. Included in this analysis shall be a comparison of the receiving stream water quality with the discharge and without the discharge; and

(d) A description of fish, other vertebrate populations, and macroinvertebrates that reside in or are likely to pass through the proposed mixing zone, including expected location (if known), species identification, stage of development, and time of year when their presence is expected. For existing discharges, the applicant shall provide the same information for similar nearby streams that are unaffected by wastewater discharges. In addition, any threatened or endangered species in the immediate vicinity of the receiving stream shall be identified; and

(e) The expected impact of the discharge on aquatic organisms and/or fish passage, including any expected negative impacts from the effluent attracting fish where that is not desirable; and

(f) A description of the expected environmental benefits to be derived from the discharge or other mitigation measures proposed by the applicant, including but not limited to improvements in water quality, improvements in fish passage, and improvements in aquatic habitat. If the applicant proposes to undertake mitigation measures designed to provide environmental benefits (e.g., purchasing water or water conservation rights to increase stream flows or establishing stream cover to decrease temperature), the applicant shall describe the mitigation measures in detail, including a description of the steps it will take to ensure that the benefits of the mitigation measures are attained and are not lost or diminished over time.

(g) Some or all of the above study requirements may be waived by the Department, if the Department determines that the information is not needed. In the event that the Department does waive some or all of the above study requirements, the basis for waiving the requirements will be included in the permit evaluation report upon the next permit renewal or modification relating to the mixing zone.

(h) Upon request of the Department, the applicant shall conduct additional studies to further evaluate the impact of the discharge, which may include whole effluent toxicity testing, stream surveys for water quality, stream surveys for fish and other aquatic organisms, or other studies as specified by the Department.

(i) In evaluating whether an existing or proposed increase in an existing discharge would result in a net environmental benefit, the applicant shall use the native biological community in a nearby, similar stream that is unaffected by wastewater discharges. The Department shall consider all information generated as required in this rule and other relevant information. The evaluation shall consider benefits to the native aquatic biological community only.

(iii) Permit conditions: Upon determination by the Department that the discharge and mitigation measures (if any) will likely result in an overall environmental benefit, the Department shall include appropriate permit conditions to insure that the environmental benefits are attained and continue. Such permit conditions may include but not be limited to:

(a) Maximum allowed effluent flows and pollutant loads;

(b) Requirements to maintain land ownership, easements, contracts, or other legally binding measures necessary to assure that mitigation measures, if any, remain in place and effective;

(c) Special operating conditions;

(d) Monitoring and reporting requirements; and

(e) Studies to evaluate the effectiveness of mitigation measures.

(B) **Constructed water course**: A mixing zone may be extended through a constructed water course and into a natural water course. For the purposes of this rule, a constructed water course is one that was constructed for irrigation, site drainage, or wastewater conveyance, and has the following characteristics:

(i) Irrigation flows, stormwater runoff, or wastewater flows have replaced natural streamflow regimes; and

(ii) The channel form is greatly simplified in lengthwise and cross sectional profiles; and

(iii) Physical and biological characteristics that differ significantly from nearby natural streams; and

(iv) A much lower diversity of aquatic species than found in nearby natural streams; and

(v) If the constructed water course is an irrigation canal, then it must have effective fish screens in place to qualify as a constructed water course.

(C) **Insignificant discharges**: Insignificant discharges are those that either by volume, pollutant characteristics, and/or temporary nature are expected to have little if any impact on beneficial uses in the receiving stream, and for which the extensive evaluations required for discharges to smaller streams are not warranted. For the purposes of this rule, only filter backwash discharges and underground storage tank cleanups are considered insignificant discharges.

(D) **Other requirements for alternate mixing zones**: The following are additional requirements for dischargers requesting an alternate mixing zone:

(i) Most discharges that qualify for an alternate mixing zone will extend through the receiving stream until a larger stream is reached, where thorough mixing of the effluent can occur and where the edge of the allowed mixing zone will be located. The portion of the mixing zone in the larger stream must meet all of the requirements of the standard mixing zone, including not blocking aquatic life passage; and

(ii) An alternate mixing zone shall not be granted if a municipal drinking water intake is located within the proposed mixing zone, and the discharge has a significant adverse impact on the drinking water source; and

(iii) The discharge will not pose an unreasonable hazard to the environment or pose a significant health risk, considering the likely pathways of exposure; and

(iv) The discharge shall not be acutely toxic to organisms passing through the mixing zone; and

(v) An alternate mixing zone shall not be granted if the substances discharged may accumulate in the sediments or bioaccumulate in aquatic life or wildlife to levels that adversely affect public health, safety, or welfare; aquatic life; wildlife; or other designated beneficial uses; and

(vi) In the event that the receiving stream is water quality limited, the requirements for discharges to water quality limited streams supersede this rule.

(5) Testing methods: The analytical testing methods for determining compliance with the water quality standards contained in this rule shall be in accordance with the most recent edition of **Standard Methods for the Examination of Water and Waste Water published jointly by the American Public Health Association, American Water Works Association, and Water Pollution Control Federation,** unless the Department has published an applicable superseding method, in which case testing shall be in accordance with the superseding method; provided, however, that testing in accordance with an alternative method shall comply with this rule if the Department has published the method or has approved the method in writing.

[**Publications:** The publication(s) referred to or incorporated by reference in this rule are available from the office of the Department of Environmental Quality.]

Stat. Auth.: ORS 468B.035 & 468.735; ORS 468B.048
Stat. Implemented: ORS 468B.048
Hist.: DEQ 128, f. & ef. 1-21-77; DEQ 1-1980, f. & ef. 1-9-80; DEQ 18-1987, f. & ef. 9-4-87; DEQ 14-1991, f. & cert. ef. 8-13-91; DEQ 17-1992, f. & cert. ef. 8-7-92 (and corrected 8-13-92)

Minimum Design Criteria for Treatment and Control of Wastes

340-41-535 Subject to the implementation program set forth in OAR 340-41-120, prior to discharge of any wastes from any new or modified facility to any waters of the Hood River Basin, such wastes shall be treated and controlled in facilities designed in accordance with the following minimum criteria. (In designing treatment facilities, average conditions and a normal range of variability are generally used in establishing design criteria. A facility once completed and placed in operation should operate at or near the design limit most of the time but may operate below the design criteria limit at times due to variables which are unpredictable or uncontrollable. This is particularly true for biological treatment facilities. The actual operating limits are intended to be established by permit pursuant to ORS 468.740 and recognize that the actual performance level may at times be less than the design criteria).

(1) Sewage wastes:

(a) During periods of low stream flows (approximately May 1 to October 31):

(A) Columbia River main stem (river miles 147 to 203): Treatment resulting in monthly average effluent concentrations not to exceed 20 mg/l of BOD and 20 mg/l of suspended solids or equivalent control;

(B) Other Hood River Basin streams: Treat-ment resulting in monthly average effluent concentrations not to exceed 10 mg/l of BOD and 10 mg/l of suspended solids or equivalent control.

(b) During the period of high stream flows (approximately November 1 to April 30): A minimum of secondary treatment or equivalent control and unless otherwise specifically authorized by the Department, operation of all waste treatment and control facilities at maximum practicable efficiency and effectiveness so as to minimize waste discharges to public waters;

(c) Effluent BOD concentrations in mg/l, divided by the dilution factor (ratio of receiving stream flow to effluent flow) shall not exceed one unless otherwise approved by the EQC;

(d) Sewage wastes shall be disinfected, after treatment, equivalent to thorough mixing with sufficient chlorine to provide a residual of at least one part per million after 60 minutes of contact time unless otherwise specifically authorized by permit;

(e) Positive protection shall be provided to prevent bypassing raw or inadequately treated sewage to public waters unless otherwise approved by the Department where elimination of inflow and infiltration would be necessary but not presently practicable;

(f) More stringent waste treatment and control requirements may be imposed where special conditions may require.

(2) Industrial wastes:

(a) After maximum practicable inplant control, a minimum of secondary treatment or equivalent control (reduction of suspended solids and organic material where present in significant quantities, effective disinfection where bacterial organisms of public health significance are present, and control of toxic or other deleterious substances);

(b) Specific industrial waste treatment requirements shall be determined on an individual basis in accordance with the provisions of this plan, applicable federal requirements, and the following:

(A) The uses which are or may likely be made of the receiving stream;

(B) The size and nature of flow of the receiving stream;

(C) The quantity and quality of wastes to be treated; and

(D) The presence or absence of other sources of pollution on the same watershed.

(c) Where industrial, commercial, or agricul-tural effluents contain significant quantities of potentially toxic elements, treatment requirements shall be determined utilizing appropriate bioassays;

(d) Industrial cooling waters containing significant heat loads shall be subjected to offstream cooling or heat recovery prior to discharge to public waters;

(e) Positive protection shall be provided to prevent bypassing of raw or inadequately treated industrial wastes to any public waters;

(f) Facilities shall be provided to prevent and contain spills of potentially toxic or hazardous materials and a positive program for containment and cleanup of such spills should they occur shall be developed and maintained.

Stat. Auth.: ORS Ch. 468
Hist.: DEQ 128, f. & ef. 1-21-77

Deschutes Basin

Beneficial Water Uses to be Protected

340-41-562 Water quality in the Deschutes River Basin (see **Figures 1** and **10**) shall be managed to protect the recognized beneficial uses as indicated in **Table 9**.

Stat. Auth.: ORS Ch. 468
Hist.: DEQ 128, f. & ef. 1-21-77; DEQ 9-1985, f. & ef. 8-6-85

Water Quality Standards Not to be Exceeded (To be Adopted Pursuant to ORS 468.735 and Enforceable Pursuant to ORS 468.720, 468.990, and 468.992)

340-41-565 (1) Notwithstanding the water quality standards contained below, the highest and best practicable treatment and/or control of wastes, activities, and flows shall in every case be provided so as to maintain dissolved oxygen and overall water quality at the highest possible levels and water temperatures, coliform bacteria concentrations, dissolved chemical substances, toxic materials, radioactivity, turbidities, color, odor, and other deleterious factors at the lowest possible levels.

(2) No wastes shall be discharged and no activities shall be conducted which either alone or in combination with other wastes or activities will cause violation of the following standards in the waters of the Deschutes River Basin:

(a) Dissolved oxygen (DO): The changes adopted by the Commission on January 11, 1996, become effective July 1, 1996. Until that time, the requirements of this rule that were in effect on January 10, 1996, apply:

(A) For waterbodies identified by the Department as providing salmonid spawning, during the periods from spawning until fry emergence from the gravels, the following criteria apply:

(i) The dissolved oxygen shall not be less than 11.0 mg/l. However, if the minimum intergravel dissolved oxygen, measured as a spatial median, is 8.0 mg/l or greater, then the DO

criterion is 9.0 mg/l;

(ii) Where conditions of barometric pressure, altitude, and temperature preclude attainment of the 11.0 mg/l or 9.0 mg/l criteria, dissolved oxygen levels shall not be less than 95 percent of saturation.

(B) For waterbodies identified by the Department as providing salmonid spawning during the period from spawning until fry emergence from the gravels, the spatial median intergravel dissolved oxygen concentration shall not fall below 6.0 mg/l;

(C) A spatial median of 8.0 mg/l intergravel dissolved oxygen level shall be used to identify areas where the recognized beneficial use of salmonid spawning, egg incubation and fry emergence from the egg and from the gravels may be impaired and therefore require action by the Department. Upon determination that the spatial median intergravel dissolved oxygen concentration is below 8.0 mg/l, the Department may, in accordance with priorities established by the Department for evaluating water quality impaired waterbodies, determine whether to list the waterbody as water quality limited under the Section 303(d) of the Clean Water Act, initiate pollution control strategies as warranted, and where needed cooperate with appropriate designated management agencies to evaluate and implement necessary best management practices for nonpoint source pollution control;

(D) For waterbodies identified by the Department as providing cold-water aquatic life, the dissolved oxygen shall not be less than 8.0 mg/l as an absolute minimum. Where conditions of barometric pressure, altitude, and temperature preclude attainment of the 8.0 mg/l, dissolved oxygen shall not be less than 90 percent of saturation. At the discretion of the Department, when the Department determines that adequate information exists, the dissolved oxygen shall not fall below 8.0 mg/l as a 30-day mean minimum, 6.5 mg/l as a seven-day minimum mean, and shall not fall below 6.0 mg/l as an absolute minimum **(Table 21)**;

(E) For waterbodies identified by the Department as providing cool-water aquatic life, the dissolved oxygen shall not be less than 6.5 mg/l as an absolute minimum. At the discretion of the Department, when the Department determines that adequate information exists, the dissolved oxygen shall not fall below 6.5 mg/l as a 30-day mean minimum, 5.0 mg/l as a seven-day minimum mean, and shall not fall below 4.0 mg/l as an absolute minimum **(Table 21)**;

(F) For waterbodies identified by the Department as providing warm-water aquatic life, the dissolved oxygen shall not be less than 5.5 mg/l as an absolute minimum. At the discretion of the Department, when the Department determines that adequate information exists, the dissolved oxygen shall not fall below 5.5 mg/l as a 30-day mean minimum, and shall not fall below 4.0 mg/l as an absolute minimum **(Table 21)**;

(b) Temperature: The changes adopted by the Commission on January 11, 1996, become effective July 1, 1996. Until that time, the requirements of this rule that were in effect on January 10, 1996, apply. The method for measuring the numeric temperature criteria specified in this rule is defined in OAR 340-41-006(54):

(A) To accomplish the goals identified in OAR 340-41-120(11), unless specifically allowed under a Department-approved surface water temperature management plan as required under OAR 340-41-026(3)(a)(D), no measurable surface water temperature increase resulting from anthropogenic activities is allowed:

(i) In a basin for which salmonid fish rearing is a designated beneficial use, and in which surface water temperatures exceed 64.0°F (17.8°C);

(ii) In the Columbia River or its associated sloughs and channels from the mouth to river

mile 309 when surface water temperatures exceed 68.0°F (20.0°C);

(iii) In waters and periods of the year determined by the Department to support native salmonid spawning, egg incubation, and fry emergence from the egg and from the gravels in a basin which exceeds 55.0°F (12.8°C);

(iv) In waters determined by the Department to support or to be necessary to maintain the viability of native Oregon bull trout, when surface water temperatures exceed 50.0°F (10.0°C);

(v) In waters determined by the Department to be ecologically significant cold-water refugia;

(vi) In stream segments containing federally listed Threatened and Endangered species if the increase would impair the biological integrity of the Threatened and Endangered population;

(vii) In Oregon waters when the dissolved oxygen (DO) levels are within 0.5 mg/l or 10 percent saturation of the water column or intergravel DO criterion for a given stream reach or subbasin;

(viii) In natural lakes.

(B) An exceedance of the numeric criteria identified in subparagraphs (A)(i) through (iv) of this subsection will not be deemed a temperature standard violation if it occurs when the air temperature during the warmest seven-day period of the year exceeds the 90th percentile of the seven-day average daily maximum air temperature calculated in a yearly series over the historic record. However, during such periods, the anthropogenic sources must still continue to comply with their surface water temperature management plans developed under OAR 340-41-026(3)(a)(D);

(C) Any source may petition the Commission for an exception to subparagraphs (A)(i) through (viii) of this subsection for discharge above the identified criteria if:

(i) The source provides the necessary scientific information to describe how the designated beneficial uses would not be adversely impacted; or

(ii) A source is implementing all reasonable management practices or measures; its activity will not significantly affect the beneficial uses; and the environmental cost of treating the parameter to the level necessary to assure full protection would outweigh the risk to the resource.

(c) Turbidity (Nephelometric Turbidity Units, NTU): No more than a ten percent cumulative increase in natural stream turbidities shall be allowed, as measured relative to a control point immediately upstream of the turbidity causing activity. However, limited duration activities necessary to address an emergency or to accommodate essential dredging, construction or other legitimate activities and which cause the standard to be exceeded may be authorized provided all practicable turbidity control techniques have been applied and one of the following has been granted:

(A) Emergency activities: Approval coordinated by DEQ with the Department of Fish and Wildlife under conditions they may prescribe to accommodate response to emergencies or to protect public health and welfare;

(B) Dredging, Construction or other Legitimate Activities: Permit or certification authorized under terms of Section 401 or 404 (Permits and Licenses, Federal Water Pollution Control Act) or OAR 141-85-100 et. seq. (Removal and Fill Permits, Division of State Lands), with limitations and conditions governing the activity set forth in the permit or certificate.

(d) pH (hydrogen ion concentration): pH values shall not fall outside the ranges identified in paragraphs (A), (B), and (C) of this subsection. The following exception applies:

Waters impounded by dams existing on January 1, 1996, which have pHs that exceed the criteria shall not be considered in violation of the standard if the Department determines that the exceedance would not occur without the impoundment and that all practicable measures have been taken to bring the pH in the impounded waters into compliance with the criteria:

(A) Columbia River (river miles 203 to 218): 7.0 - 8.5;

(B) All other Basin streams (except Cascade lakes): 6.5 – 8.5;

(C) Cascade lakes above 3,000 feet altitude: pH values shall not fall outside the range of 6.0 to 8.5.

(e) Bacteria standards:

(A) Numeric Criteria: Organisms of the coliform group commonly associated with fecal sources (MPN or equivalent membrane filtration using a representative number of samples) shall not exceed the criteria described in subparagraphs (i) and (ii) of this paragraph. Freshwaters:

(i) A 30-day log mean of 126 *E. coli* organisms per 100 ml, based on a minimum of five (5) samples;

(ii) No single sample shall exceed 406 *E. coli* organisms per 100 ml;

(B) Raw Sewage Prohibition: No sewage shall be discharged into or in any other manner be allowed to enter the waters of the State unless such sewage has been treated in a manner approved by the Department or otherwise allowed by these rules;

(C) Animal Waste: Runoff contaminated with domesticated animal wastes shall be minimized and treated to the maximum extent practicable before it is allowed to enter waters of the State;

(D) Effluent Limitations and Water Quality Limited Waterbodies: Effluent limitations to implement the criteria in this rule are found in OAR 340-41-120(12) through (16). Implementation of the criteria in this rule in water quality limited waterbodies is described in OAR 340-41-026(3)(a)(I) and OAR 340-41-120(17).

(f) Bacterial pollution or other conditions deleterious to waters used for domestic purposes, livestock watering, irrigation, bathing, or shellfish propagation, or otherwise injurious to public health shall not be allowed;

(g) The liberation of dissolved gases, such as carbon dioxide, hydrogen sulfide, or other gases, in sufficient quantities to cause objectionable odors or to be deleterious to fish or other aquatic life, navigation, recreation, or other reasonable uses made of such waters shall not be allowed;

(h) The development of fungi or other growths having a deleterious effect on stream bottoms, fish or other aquatic life, or which are injurious to health, recreation, or industry shall not be allowed;

(i) The creation of tastes or odors or toxic or other conditions that are deleterious to fish or other aquatic life or affect the potability of drinking water or the palatability of fish or shellfish shall not be allowed;

(j) The formation of appreciable bottom or sludge deposits or the formation of any organic or inorganic deposits deleterious to fish or other aquatic life or injurious to public health, recreation, or industry shall not be allowed;

(k) Objectionable discoloration, scum, oily sleek or floating solids, or coating of aquatic life with oil films shall not be allowed;

(l) Aesthetic conditions offensive to the human senses of sight, taste, smell, or touch shall not be allowed;

(m) Radioisotope concentrations shall not exceed maximum permissible concentrations

(MPC's) in drinking water, edible fishes or shellfishes, wildlife, irrigated crops, livestock and dairy products, or pose an external radiation hazard;

(n) (A) The concentration of total dissolved gas relative to atmospheric pressure at the point of sample collection shall not exceed 110 percent of saturation, except when stream flow exceeds the ten-year, seven-day average flood. However, for Hatchery receiving waters and waters of less than two feet in depth, the concentration of total dissolved gas relative to atmospheric pressure at the point of sample collection shall not exceed 105 percent of saturation;

(B) The Commission may modify the total dissolved gas criteria in the Columbia River for the purpose of allowing increased spill for salmonid migration. The Commission must find that:

(i) Failure to act would result in greater harm to salmonid stock survival through in-river migration than would occur by increased spill;

(ii) The modified total dissolved gas criteria associated with the increased spill provides a reasonable balance of the risk of impairment due to elevated total dissolved gas to both resident biological communities and other migrating fish and to migrating adult and juvenile salmonids when compared to other options for in-river migration of salmon;

(iii) Adequate data will exist to determine compliance with the standards; and

(iv) Biological monitoring is occurring to document that the migratory salmonid and resident biological communities are being protected.

(C) The Commission will give public notice and notify all known interested parties and will make provision for opportunity to be heard and comment on the evidence presented by others, except that the Director may modify the total dissolved gas criteria for emergencies for a period not exceeding 48 hours;

(D) The Commission may, at its discretion, consider alternative modes of migration.

(o) Total Dissolved Solids: Guide concentrations listed below shall not be exceeded unless otherwise specifically authorized by DEQ upon such conditions as it may deem necessary to carry out the general intent of this plan and to protect the beneficial uses set forth in OAR 340-41-562: 500.0 mg/l;

(p) Toxic Substances:

(A) Toxic substances shall not be introduced above natural background levels in the waters of the state in amounts, concentrations, or combinations which may be harmful, may chemically change to harmful forms in the environment, or may accumulate in sediments or bioaccumulate in aquatic life or wildlife to levels that adversely affect public health, safety, or welfare; aquatic life; wildlife; or other designated beneficial uses;

(B) Levels of toxic substances shall not exceed the criteria listed in **Table 20** which were based on criteria established by EPA and published in **Quality Criteria for Water (1986)**, unless otherwise noted;

(C) The criteria in paragraph (B) of this subsection shall apply unless data from scientifically valid studies demonstrate that the most sensitive designated beneficial uses will not be adversely affected by exceeding a criterion or that a more restrictive criterion is warranted to protect beneficial uses, as accepted by the Department on a site specific basis. Where no published EPA criteria exist for a toxic substance, public health advisories and other published scientific literature may be considered and used, if appropriate, to set guidance values;

(D) Bio-assessment studies such as laboratory bioassays or instream measurements of indigenous biological communities, shall be conducted, as the Department deems necessary, to monitor the toxicity of complex effluents, other suspected discharges or chemical substances

without numeric criteria, to aquatic life. These studies, properly conducted in accordance with standard testing procedures, may be considered as scientifically valid data for the purposes of paragraph (C) of this subsection. If toxicity occurs, the Department shall evaluate and implement measures necessary to reduce toxicity on a case-by-case basis.

(3) Where the naturally occurring quality parameters of waters of the Deschutes Basin are outside the numerical limits of the above assigned water quality standards, the naturally occurring water quality shall be the standard. However, in such cases special restrictions, described in OAR 340-41-026(3)(a)(C)(iii), apply to discharges that affect dissolved oxygen.

(4) Mixing zones:

(a) The Department may allow a designated portion of a receiving water to serve as a zone of dilution for wastewaters and receiving waters to mix thoroughly and this zone will be defined as a mixing zone;

(b) The Department may suspend all or part of the water quality standards, or set less restrictive standards, in the defined mixing zone, provided that the following conditions are met:

(A) The water within the mixing zone shall be free of:

(i) Materials in concentrations that will cause acute toxicity to aquatic life as measured by a Department approved bioassay method. Acute toxicity is lethality to aquatic life as measured by a significant difference in lethal concentration between the control and 100 percent effluent in an acute bioassay test. Lethality in 100 percent effluent may be allowed due to ammonia and chlorine only when it is demonstrated on a case-by-case basis that immediate dilution of the effluent within the mixing zone reduces toxicity below lethal concentrations. The Department may on a case-by-case basis establish a zone of immediate dilution if appropriate for other parameters;

(ii) Materials that will settle to form objectionable deposits;

(iii) Floating debris, oil, scum, or other materials that cause nuisance conditions;

(iv) Substances in concentrations that produce deleterious amounts of fungal or bacterial growths.

(B) The water outside the boundary of the mixing zone shall:

(i) Be free of materials in concentrations that will cause chronic (sublethal) toxicity. Chronic toxicity is measured as the concentration that causes long-term sublethal effects, such as significantly impaired growth or reproduction in aquatic organisms, during a testing period based on test species life cycle. Procedures and end points will be specified by the Department in wastewater discharge permits;

(ii) Meet all other water quality standards under normal annual low flow conditions.

(c) The limits of the mixing zone shall be described in the wastewater discharge permit. In determining the location, surface area, and volume of a mixing zone area, the Department may use appropriate mixing zone guidelines to assess the biological, physical, and chemical character of receiving waters, and effluent, and the most appropriate placement of the outfall, to protect instream water quality, public health, and other beneficial uses. Based on receiving water and effluent characteristics, the Department shall define a mixing zone in the immediate area of a wastewater discharge to:

(A) Be as small as feasible;

(B) Avoid overlap with any other mixing zones to the extent possible and be less than the total stream width as necessary to allow passage of fish and other aquatic organisms;

(C) Minimize adverse effects on the indigenous biological community especially when species are present that warrant special protection for their economic importance, tribal

significance, ecological uniqueness, or for other similar reasons as determined by the Department and does not block the free passage of aquatic life;

(D) Not threaten public health;

(E) Minimize adverse effects on other designated beneficial uses outside the mixing zone.

(d) The Department may request the applicant of a permitted discharge for which a mixing zone is required, to submit all information necessary to define a mixing zone, such as:

(A) Type of operation to be conducted;

(B) Characteristics of effluent flow rates and composition;

(C) Characteristics of low flows of receiving waters;

(D) Description of potential environmental effects;

(E) Proposed design for outfall structures.

(e) The Department may, as necessary, require mixing zone monitoring studies and/or bioassays to be conducted to evaluate water quality or biological status within and outside the mixing zone boundary;

(f) The Department may change mixing zone limits or require the relocation of an outfall if it determines that the water quality within the mixing zone adversely affects any existing beneficial uses in the receiving waters.

(g) **Alternate requirements for mixing zones**: For some existing or proposed discharges to some receiving streams, it may not be practicable to treat wastewater to meet instream water quality standards at the point of discharge or within a short distance from the point of discharge. Some of these discharges could be allowed without impairing the overall ecological integrity of the receiving streams, or may provide an overall benefit to the receiving stream. This section specifies the conditions and circumstances under which a mixing zone may be allowed by the Department that extends beyond the immediate area around a discharge point, or that extends across a stream width. An alternate mixing zone may be approved if the applicant demonstrates to the Department's satisfaction that the discharge (A) creates an overall environmental benefit, or (B) is to a constructed water course, or (C) is insignificant. The three circumstances under which alternate mixing zones may be established are described further below.

(A) **Overall environmental benefit**.

(i) Qualifying for alternate mixing zone based on overall environmental benefit: In order to qualify for an alternate mixing zone based on a finding of overall environmental benefit, the discharger must demonstrate to the Department's satisfaction the following:

(a) That all practical strategies have been or will be implemented to minimize the pollutant loads in the effluent; and

(b) For proposed increased discharges, the current actual discharge and mixing zone does not meet the requirements of a standard mixing zone; and

(c) Either that, on balance, an environmental benefit would be lost if the discharge did not occur, or that the discharger is prepared to undertake other actions that will mitigate the effect of the discharge to an extent resulting in a net environmental benefit to the receiving stream.

(d) For the purposes of this rule, the term "practical" shall include environmental impact, availability of alternatives, cost of alternatives, and other relevant factors.

(ii) Studies required and evaluation of studies: In order to demonstrate that, on balance, an environmental benefit will result from the discharge, the following information shall be provided by the applicant:

(a) The effluent flow and pollutant loads that are detected or expected in the effluent, by

month, both average and expected worst case discharges. The parameters to be evaluated include at a minimum temperature, biochemical oxygen demand, total suspended solids, total dissolved solids, pH, settleable solids, e. coli bacteria, oil and grease, any pollutants listed in Table 20 of this rule division, and any pollutant for which the receiving stream has been designated by the Department as water quality limited; and

(b) Receiving stream flow, by month; and

(c) The expected impact of the discharge, by month, on the receiving stream for the entire proposed mixing zone area for all of the pollutants listed above. Included in this analysis shall be a comparison of the receiving stream water quality with the discharge and without the discharge; and

(d) A description of fish, other vertebrate populations, and macroinvertebrates that reside in or are likely to pass through the proposed mixing zone, including expected location (if known), species identification, stage of development, and time of year when their presence is expected. For existing discharges, the applicant shall provide the same information for similar nearby streams that are unaffected by wastewater discharges. In addition, any threatened or endangered species in the immediate vicinity of the receiving stream shall be identified; and

(e) The expected impact of the discharge on aquatic organisms and/or fish passage, including any expected negative impacts from the effluent attracting fish where that is not desirable; and

(f) A description of the expected environmental benefits to be derived from the discharge or other mitigation measures proposed by the applicant, including but not limited to improvements in water quality, improvements in fish passage, and improvements in aquatic habitat. If the applicant proposes to undertake mitigation measures designed to provide environmental benefits (e.g., purchasing water or water conservation rights to increase stream flows or establishing stream cover to decrease temperature), the applicant shall describe the mitigation measures in detail, including a description of the steps it will take to ensure that the benefits of the mitigation measures are attained and are not lost or diminished over time.

(g) Some or all of the above study requirements may be waived by the Department, if the Department determines that the information is not needed. In the event that the Department does waive some or all of the above study requirements, the basis for waiving the requirements will be included in the permit evaluation report upon the next permit renewal or modification relating to the mixing zone.

(h) Upon request of the Department, the applicant shall conduct additional studies to further evaluate the impact of the discharge, which may include whole effluent toxicity testing, stream surveys for water quality, stream surveys for fish and other aquatic organisms, or other studies as specified by the Department.

(i) In evaluating whether an existing or proposed increase in an existing discharge would result in a net environmental benefit, the applicant shall use the native biological community in a nearby, similar stream that is unaffected by wastewater discharges. The Department shall consider all information generated as required in this rule and other relevant information. The evaluation shall consider benefits to the native aquatic biological community only.

(iii) Permit conditions: Upon determination by the Department that the discharge and mitigation measures (if any) will likely result in an overall environmental benefit, the Department shall include appropriate permit conditions to insure that the environmental benefits are attained and continue. Such permit conditions may include but not be limited to:

(a) Maximum allowed effluent flows and pollutant loads;

(b) Requirements to maintain land ownership, easements, contracts, or other legally binding measures necessary to assure that mitigation measures, if any, remain in place and effective;

(c) Special operating conditions;

(d) Monitoring and reporting requirements; and

(e) Studies to evaluate the effectiveness of mitigation measures.

(B) **Constructed water course**: A mixing zone may be extended through a constructed water course and into a natural water course. For the purposes of this rule, a constructed water course is one that was constructed for irrigation, site drainage, or wastewater conveyance, and has the following characteristics:

(i) Irrigation flows, stormwater runoff, or wastewater flows have replaced natural streamflow regimes; and

(ii) The channel form is greatly simplified in lengthwise and cross sectional profiles; and

(iii) Physical and biological characteristics that differ significantly from nearby natural streams; and

(iv) A much lower diversity of aquatic species than found in nearby natural streams; and

(v) If the constructed water course is an irrigation canal, then it must have effective fish screens in place to qualify as a constructed water course.

(C) **Insignificant discharges**: Insignificant discharges are those that either by volume, pollutant characteristics, and/or temporary nature are expected to have little if any impact on beneficial uses in the receiving stream, and for which the extensive evaluations required for discharges to smaller streams are not warranted. For the purposes of this rule, only filter backwash discharges and underground storage tank cleanups are considered insignificant discharges.

(D) **Other requirements for alternate mixing zones**: The following are additional requirements for dischargers requesting an alternate mixing zone:

(i) Most discharges that qualify for an alternate mixing zone will extend through the receiving stream until a larger stream is reached, where thorough mixing of the effluent can occur and where the edge of the allowed mixing zone will be located. The portion of the mixing zone in the larger stream must meet all of the requirements of the standard mixing zone, including not blocking aquatic life passage; and

(ii) An alternate mixing zone shall not be granted if a municipal drinking water intake is located within the proposed mixing zone, and the discharge has a significant adverse impact on the drinking water source; and

(iii) The discharge will not pose an unreasonable hazard to the environment or pose a significant health risk, considering the likely pathways of exposure; and

(iv) The discharge shall not be acutely toxic to organisms passing through the mixing zone; and

(v) An alternate mixing zone shall not be granted if the substances discharged may accumulate in the sediments or bioaccumulate in aquatic life or wildlife to levels that adversely affect public health, safety, or welfare; aquatic life; wildlife; or other designated beneficial uses; and

(vi) In the event that the receiving stream is water quality limited, the requirements for discharges to water quality limited streams supersede this rule.

(5) Testing methods: The analytical testing methods for determining compliance with the water quality standards contained in this rule shall be in accordance with the most recent edition of

Standard Methods for the Examination of Water and Waste Water published jointly by the American Public Health Association, American Water Works Association, and Water Pollution Control Federation, unless the Department has published an applicable superseding method, in which case testing shall be in accordance with the superseding method; provided, however, that testing in accordance with an alternative method shall comply with this rule if the Department has published the method or has approved the method in writing.

[**Publications:** The publication(s) referred to or incorporated by reference in this rule are available from the office of the Department of Environmental Quality.]

Stat. Auth.: ORS 468B.035 & 468.735; ORS 468B.048
Stat. Implemented: ORS 468B.048
Hist.: DEQ 128, f. & ef. 1-21-77; DEQ 1-1980, f. & ef. 1-9-80; DEQ 18-1987, f. & ef. 9-4-87; DEQ 14-1991, f. & cert. ef. 8-13-91; DEQ 17-1992, f. & cert. ef. 8-7-92 (and corrected 8-13-92)

Minimum Design Criteria for Treatment and Control of Wastes

340-41-575 Subject to the implementation program set forth in OAR 340-41-120, prior to discharge of any wastes from any new or modified facility to any waters of the Deschutes River Basin, such wastes shall be treated and controlled in facilities designed in accordance with the following minimum criteria. (In designing treatment facilities, average conditions and a normal range of variability are generally used in establishing design criteria. A facility once completed and placed in operation should operate at or near the design limit most of the time but may operate below the design criteria limit at times due to variables which are unpredictable or uncontrollable. This is particularly true for biological treatment facilities. The actual operating limits are intended to be established by permit pursuant to ORS 468.740 and recognize that the actual performance level may at times be less than the design criteria.)

(1) Sewage wastes:

(a) Metolius River Subbasin and Deschutes River Basin above Bend Diversion Dam (river mile 165): Treatment resulting in monthly average effluent concentrations not to exceed 5 mg/l of BOD and 5 mg/l of SS or equivalent control;

(b) Deschutes River from the Bend Diversion Dam (river mile 165) downstream to the Pelton Reregulating Dam (river mile 100) and for the Crooked River Subbasin:

(A) During periods of low stream flows (approximately April 1 to October 31): Treatment resulting in monthly average effluent concentra-tions not to exceed 10 mg/l of BOD and 10 mg/l of SS or equivalent control;

(B) During the period of high stream flows (approximately November 1 to March 31): A minimum of secondary treatment or equivalent and unless otherwise specifically authorized by the Department, operation of all waste treatment and control facilities at maximum practicable efficiency and effectiveness so as to minimize waste discharges to public waters.

(c) Deschutes from the Pelton Reregulating Dam (river mile 100) downstream to the mouth:

(A) During periods of low stream flows (approximately April 1 to October 31): Treatment resulting in monthly average effluent concentra-tions not to exceed 20 mg/l of BOD and 20 mg/l of SS or equivalent control;

(B) During the period of high stream flows (approximately November 1 to March 31): A minimum of secondary treatment or equivalent and unless otherwise specifically authorized by the Department, operation of all waste treatment and control facilities at maximum practicable

efficiency and effectiveness so as to minimize waste discharges to public waters.

(d) Columbia River (river miles 203 to 218):

(A) From approximately May 1 to October 31: Treatment resulting in monthly average effluent concentrations not to exceed 20 mg/l of BOD and 20 mg/l of suspended solids or equivalent control;

(B) From approximately November 1 to April 30: A minimum of secondary treatment or equivalent control and unless otherwise specifically authorized by the Department, operation of all waste treatment and control facilities at maximum practicable efficiency and effectiveness so as to minimize waste discharges to public waters.

(e) Effluent BOD concentrations in mg/l, divided by the dilution factor (ratio of receiving stream flow to effluent flow) shall not exceed one unless otherwise approved by the EQC;

(f) Sewage wastes shall be disinfected, after treatment, equivalent to thorough mixing with sufficient chlorine to provide a residual of at least 1 part per million after 60 minutes of contact time unless otherwise specifically authorized by permit;

(g) Positive protection shall be provided to prevent bypassing raw or inadequately treated sewage to public waters unless otherwise approved by the Department where elimination of inflow and infiltration would be necessary but not presently practicable;

(h) More stringent waste treatment and control requirements may be imposed where special conditions may require.

(2) Industrial wastes:

(a) After maximum practicable inplant control, a minimum of secondary treatment or equivalent control (reduction of suspended solids and organic materials where present in significant quantities, effective disinfection where bacterial organisms of public health significance are present, and control of toxic or other deleterious substances);

(b) Specific industrial waste treatment requirements shall be determined on an individual basis in accordance with the provisions of this plan, applicable federal requirements, and the following:

(A) The uses which are or may likely be made of the receiving stream;

(B) The size and nature of flow of the receiving stream;

(C) The quantity and quality of wastes to be treated; and

(D) The presence or absence of other sources of pollution on the same watershed.

(c) Where industrial, commercial, or agricul-tural effluents contain significant quantities of potentially toxic elements, treatment requirements shall be determined utilizing appropriate bioassays;

(d) Industrial cooling waters containing significant heat loads shall be subjected to offstream cooling or heat recovery prior to discharge to public waters;

(e) Positive protection shall be provided to prevent bypassing or raw or inadequately treated industrial wastes to any public waters;

(f) Facilities shall be provided to prevent and contain spills of potentially toxic or hazardous materials and a positive program for containment and cleanup of such spills should they occur shall be developed and maintained.

Stat. Auth.: ORS Ch. 468
Hist.: DEQ 128, f. & ef. 1-21-77

Special Policies and Guidelines

340-41-580

(1) In order to protect the shallow aquifer located in the vicinity of the community of LaPine in Deschutes County for present and future use as a drinking water source, it is the policy of the Environmental Quality Commission to support the implementation of the LaPine Aquifer Management Plan adopted by the Deschutes County Board of Commissioners on September 28, 1982, by requiring the following:

(a) The Environmental Quality Commission finds that existing on-site sewage disposal systems inside the core area of the community of LaPine are causing groundwater pollution. By January 1, 1987, the waste water generated within this core area shall be collected, treated and disposed according to the regional sewerage plan approved by the Department:

(A) The core area of the community of LaPine shall be that area defined as follows: Located in a portion of Sections 10, 11, 14, and 15, Township 22 South, Range 10 East, Willamette Meridian, Deschutes County, Oregon, more particularly described as follows: Beginning at the northwest corner of the intersection of U.S. Highway 97 and First Street (aka Reed Road); thence in a northeasterly direction along the westerly right-of-way line of said U.S. Highway 97 a distance of 1,480 feet, more or less, to the intersection of said U.S. Highway 97 and the northerly line of the south one-half of the southwest one-quarter of said Section 11; thence in a westerly direction along the northerly line of the south one-half of the southwest one-quarter of said Section 11 a distance of 1,950 feet, more or less, to the south one-sixteenth corner between said Sections 10 and 11; thence in a northerly direction along the section line between Sections 10 and 11, 990 feet, more or less, to the northeast corner of the south one-half of the north one-half of the northeast one-quarter of the southeast one-quarter of said Section 10 being the northeast corner of the Bend-LaPine School District property; thence in a westerly direction along the north line of the said south one-half of the north one-half of the northeast one-quarter of the southeast one-quarter, being the north line of the said Bend-LaPine School District property, 1,320 feet, more or less, to the northwest corner of the south one-half of the north one-half of the southeast one-quarter of the southeast one-quarter of said Section 10, said point further being the northwest corner of the Bend-LaPine School District property; thence in a southerly direction along the westerly line of the east one-half of the southeast one-quarter of said Section 10, 2, 310 feet, more or less, to a point at the intersection of the westerly line of the southeast one-quarter of the southeast one-quarter of said Section 10 and the northerly right-of-way line of said First Street, said point further being the southwest corner of the Bend-LaPine School District property; thence in an easterly direction along the northerly right-of-way line of said First Street, 350 feet, more or less, to a point on the northerly right-of-way line of said First Street due north of the northwest corner of the alley in Block 16 of the Plat of LaPine Subdivision; thence in a southerly direction along the westerly side of said alley 550 feet, more or less, to a point along the southerly right-of-way of 2nd Street due south of the southwest corner of the alley in Block 16 of the Plat of LaPine Subdivision; thence in an easterly direction along the southerly right-of-way of 2nd Street, 390 feet, more or less, to the southwest corner of the intersection of Stillwell Street and 2nd Street; thence in a southerly direction along the westerly right-of-way line of said Stillwell Street, 950 feet, more or less, to the northwest corner of the intersection of said Stillwell Street and 4th Street; thence in a southerly direction along the west right-of-way line of Stillwell Street approximately 1,186 feet to the northwest corner of the intersection of Stillwell Street and Hill Street; thence in a southwesterly direction along the west right-of-way line of Hill Street approximately 340 feet to the intersection of the west line of Hill Street with the north line of 8th Street; thence westerly along the north line of 8th Street, 41 feet, more or less to the northeast corner of the intersection of 8th Street and Stearns Street; thence in a

southerly direction along the east right-of-way line of Stearns Street approximately 387 feet to the northeast corner of the intersection of Stearns Street and 9th Street; thence in an easterly direction along the north right-of-way line of 9th Street and the easterly extension of the north line of said 9th Street, 1,093 feet to its intersection with the east right-of-way line of Pengra Huntington Road; thence in a northerly direction along the east right-of-way line of Pengra Huntington Road approximately 1,166 feet to the southwest corner of Lot 31, Government Homesite Tracts; thence in an easterly direction along the south boundary of said Lot 31 approximately 263 feet to the southeast corner of said Lot 31; thence in a northerly direction along the east boundary of said Lot 31 approximately 200 feet to the south right-of-way line of Finley Butte Road; thence in an easterly direction along the south right-of-way line of Finley Butte Road approximately 675 feet to the southeast corner of the intersection of Finley Butte Road and Bonnie Road; thence in a northerly direction along the east right-of-way line of Bonnie Road approximately 1,075 feet to the southeast corner of the intersection of Bonnie Road and William Foss Road; thence in an easterly direction along the southerly right-of-way line of said William Foss Road, 1,640 feet, more or less, to the north-south center section line of said Section 14 thence in a northerly direction along the north-south center line of said Section 14, 1,635 feet, more or less, to the north right-of-way line of said First Street (aka Reed Road); thence in a westerly direction along the north right-of-way line of said First Street, 1,432 feet, more or less, to the point of beginning;

(B) All dwellings and buildings that contain plumbing fixtures inside this core area boundary shall eliminate the discharge of inadequately treated sewage, abandon existing on-site sewage disposal systems and connect to the regional sewerage facility. This shall be done within 90 days following notification by the approved regional sewerage agency that sewer service is available.

(b) The waste water generated outside the core area of the community of LaPine but within the study area described in the LaPine Aquifer Management Plan, will be subjected to regulation under the Department's on-site waste disposal rules (OAR Chapter 340, Division 71);

(c) Waste disposal systems for new develop-ments within the LaPine Aquifer Management Plan Boundary where development density exceeds two single family equivalent dwelling units per acre or which have an aggregate waste flow in excess of 5,000 gallons per day shall only be approved if a study is conducted by the applicant which convinces the department that the aquifer will not be unreasonably degraded.

(2) In addition to the requirements set forth in section (1) of this rule, the following actions are encouraged:

(a) Since the aquifer is presently degraded to the point where it does not meet Federal Drinking Water Standards, and the installation of sewer facilities will not immediately restore the quality to safe levels, Deschutes County should notify the citizens of the LaPine core area of the need to develop a safe drinking water supply for the community as soon as possible;

(b) Residents of the LaPine area are encouraged to test their drinking water frequently;

(c) Owners of underground liquid storage tanks are encouraged to periodically test the storage tanks to assure prompt detection and repair of leaks;

(d) Data on the quality of the shallow aquifer in and around LaPine should be obtained on a periodic basis to assess the effect of the above waste water management decisions on the quality of the groundwater.

Stat. Auth.: ORS Ch. 468
Hist.: DEQ 10-1983, f. & ef. 5-25-83; DEQ 13-1985, f. & ef. 10-11-85

John Day Basin

Beneficial Water Uses to be Protected

340-41-602 Water quality in the John Day River Basin (see **Figures 1** and **11**) shall be managed to protect the recognized beneficial uses as indicated in **Table 10**.

Stat. Auth.: ORS Ch. 468
Hist.: DEQ 128, f. & ef. 1-21-77; DEQ 9-1985, f. & ef. 8-6-85

Water Quality Standards Not to be Exceeded (To be Adopted Pursuant to ORS 468.735 and Enforceable Pursuant to ORS 468.720, 468.990, and 468.992)

340-41-605 (1) Notwithstanding the water quality standards contained below, the highest and best practicable treatment and/or control of wastes, activities, and flows shall in every case be provided so as to maintain dissolved oxygen and overall water quality at the highest possible levels and water temperatures, coliform bacteria concentrations, dissolved chemical substances, toxic materials, radioactivity, turbidities, color, odor, and other deleterious factors at the lowest possible levels.

(2) No wastes shall be discharged and no activities shall be conducted which either alone or in combination with other wastes or activities will cause violation of the following standards in the waters of the John Day River Basin:

(a) Dissolved oxygen (DO): The changes adopted by the Commission on January 11, 1996, become effective July 1, 1996. Until that time, the requirements of this rule that were in effect on January 10, 1996, apply:

(A) For waterbodies identified by the Department as providing salmonid spawning, during the periods from spawning until fry emergence from the gravels, the following criteria apply:

(i) The dissolved oxygen shall not be less than 11.0 mg/l. However, if the minimum intergravel dissolved oxygen, measured as a spatial median, is 8.0 mg/l or greater, then the DO criterion is 9.0 mg/l;

(ii) Where conditions of barometric pressure, altitude, and temperature preclude attainment of the 11.0 mg/l or 9.0 mg/l criteria, dissolved oxygen levels shall not be less than 95 percent of saturation.

(B) For waterbodies identified by the Department as providing salmonid spawning during the period from spawning until fry emergence from the gravels, the spatial median intergravel dissolved oxygen concentration shall not fall below 6.0 mg/l;

(C) A spatial median of 8.0 mg/l intergravel dissolved oxygen level shall be used to identify areas where the recognized beneficial use of salmonid spawning, egg incubation and fry emergence from the egg and from the gravels may be impaired and therefore require action by the Department. Upon determination that the spatial median intergravel dissolved oxygen concentration is below 8.0 mg/l, the Department may, in accordance with priorities established by the Department for evaluating water quality impaired waterbodies, determine whether to list the waterbody as water quality limited under the Section 303(d) of the Clean Water Act, initiate pollution control strategies as warranted, and where needed cooperate with appropriate designated management agencies to evaluate and implement necessary best management practices for nonpoint source pollution control;

(D) For waterbodies identified by the Department as providing cold-water aquatic life, the dissolved oxygen shall not be less than 8.0 mg/l as an absolute minimum. Where conditions of barometric pressure, altitude, and temperature preclude attainment of the 8.0 mg/l, dissolved oxygen shall not be less than 90 percent of saturation. At the discretion of the Department, when the Department determines that adequate information exists, the dissolved oxygen shall not fall below 8.0 mg/l as a 30-day mean minimum, 6.5 mg/l as a seven-day minimum mean, and shall not fall below 6.0 mg/l as an absolute minimum (**Table 21**);

(E) For waterbodies identified by the Department as providing cool-water aquatic life, the dissolved oxygen shall not be less than 6.5 mg/l as an absolute minimum. At the discretion of the Department, when the Department determines that adequate information exists, the dissolved oxygen shall not fall below 6.5 mg/l as a 30-day mean minimum, 5.0 mg/l as a seven-day minimum mean, and shall not fall below 4.0 mg/l as an absolute minimum (**Table 21**);

(F) For waterbodies identified by the Department as providing warm-water aquatic life, the dissolved oxygen shall not be less than 5.5 mg/l as an absolute minimum. At the discretion of the Department, when the Department determines that adequate information exists, the dissolved oxygen shall not fall below 5.5 mg/l as a 30-day mean minimum, and shall not fall below 4.0 mg/l as an absolute minimum (**Table 21**);

(b) Temperature: The changes adopted by the Commission on January 11, 1996, become effective July 1, 1996. Until that time, the requirements of this rule that were in effect on January 10, 1996, apply. The method for measuring the numeric temperature criteria specified in this rule is defined in OAR 340-41-006(54):

(A) To accomplish the goals identified in OAR 340-41-120(11), unless specifically allowed under a Department-approved surface water temperature management plan as required under OAR 340-41-026(3)(a)(D), no measurable surface water temperature increase resulting from anthropogenic activities is allowed:

(i) In a basin for which salmonid fish rearing is a designated beneficial use, and in which surface water temperatures exceed 64.0°F (17.8°C);

(ii) In the Columbia River or its associated sloughs and channels from the mouth to river mile 309 when surface water temperatures exceed 68.0°F (20.0°C);

(iii) In waters and periods of the year determined by the Department to support native salmonid spawning, egg incubation, and fry emergence from the egg and from the gravels in a basin which exceeds 55.0°F (12.8°C);

(iv) In waters determined by the Department to support or to be necessary to maintain the viability of native Oregon bull trout, when surface water temperatures exceed 50.0°F (10.0°C);

(v) In waters determined by the Department to be ecologically significant cold-water refugia;

(vi) In stream segments containing federally listed Threatened and Endangered species if the increase would impair the biological integrity of the Threatened and Endangered population;

(vii) In Oregon waters when the dissolved oxygen (DO) levels are within 0.5 mg/l or 10 percent saturation of the water column or intergravel DO criterion for a given stream reach or subbasin;

(viii) In natural lakes.

(B) An exceedance of the numeric criteria identified in subparagraphs (A)(i) through (iv) of this subsection will not be deemed a temperature standard violation if it occurs when the air temperature during the warmest seven-day period of the year exceeds the 90th percentile of the seven-day average daily maximum air temperature calculated in a yearly series over the historic

record. However, during such periods, the anthropogenic sources must still continue to comply with their surface water temperature management plans developed under OAR 340-41-026(3)(a)(D);

(C) Any source may petition the Commission for an exception to subparagraphs (A)(i) through (viii) of this subsection for discharge above the identified criteria if:

(i) The source provides the necessary scientific information to describe how the designated beneficial uses would not be adversely impacted; or

(ii) A source is implementing all reasonable management practices or measures; its activity will not significantly affect the beneficial uses; and the environmental cost of treating the parameter to the level necessary to assure full protection would outweigh the risk to the resource.

(c) Turbidity (Nephelometric Turbidity Units, NTU): No more than a ten percent cumulative increase in natural stream turbidities shall be allowed, as measured relative to a control point immediately upstream of the turbidity causing activity. However, limited duration activities necessary to address an emergency or to accommodate essential dredging, construction or other legitimate activities and which cause the standard to be exceeded may be authorized provided all practicable turbidity control techniques have been applied and one of the following has been granted:

(A) Emergency activities: Approval coordinated by DEQ with the Department of Fish and Wildlife under conditions they may prescribe to accommodate response to emergencies or to protect public health and welfare;

(B) Dredging, Construction or other Legitimate Activities: Permit or certification authorized under terms of Section 401 or 404 (Permits and Licenses, Federal Water Pollution Control Act) or OAR 141-85-100 et seq. (Removal and Fill Permits, Division of State Lands), with limitations and conditions governing the activity set forth in the permit or certificate.

(d) pH (hydrogen ion concentration): pH values shall not fall outside the ranges identified in paragraphs (A) and (B) of this subsection. The following exception applies: Waters impounded by dams existing on January 1, 1996, which have pHs that exceed the criteria shall not be considered in violation of the standard if the Department determines that the exceedance would not occur without the impoundment and that all practicable measures have been taken to bring the pH in the impounded waters into compliance with the criteria:

(A) Columbia River (river miles 218 to 247): 7.0 - 8.5;

(B) All other Basin streams: 6.5 - 9.0. When greater than 25 percent of ambient measurements taken between June and September are greater than pH 8.7, and as resources are available according to priorities set by the Department, the Department shall determine whether the values higher than 8.7 are anthropogenic or natural in origin.

(e) Bacteria standards:

(A) Numeric Criteria: Organisms of the coliform group commonly associated with fecal sources (MPN or equivalent membrane filtration using a representative number of samples) shall not exceed the criteria described in subparagraphs (i) and (ii) of this paragraph. Freshwaters:

(i) A 30-day log mean of 126 *E. coli* organisms per 100 ml, based on a minimum of five (5) samples;

(ii) No single sample shall exceed 406 *E. coli* organisms per 100 ml;

(B) Raw Sewage Prohibition: No sewage shall be discharged into or in any other manner be allowed to enter the waters of the State unless such sewage has been treated in a manner approved by the Department or otherwise allowed by these rules;

(C) Animal Waste: Runoff contaminated with domesticated animal wastes shall be minimized and treated to the maximum extent practicable before it is allowed to enter waters of the State;

(D) Effluent Limitations and Water Quality Limited Waterbodies: Effluent limitations to implement the criteria in this rule are found in OAR 340-41-120(12) through (16). Implementation of the criteria in this rule in water quality limited waterbodies is described in OAR 340-41-026(3)(a)(I) and OAR 340-41-120(17).

(f) Bacterial pollution or other conditions deleterious to waters used for domestic purposes, livestock watering, irrigation, bathing, or shellfish propogation or otherwise injurious to public health shall not be allowed;

(g) The liberation of dissolved gases, such as carbon dioxide hydrogen sulfide, or other gases, in sufficient quantities to cause objectionable odors or to be deleterious to fish or other aquatic life, navigation, recreation, or other reasonable uses made of such water shall not be allowed;

(h) The development of fungi or other growths having a deleterious effect on stream bottoms, fish or other aquatic life, or which are injurious to health, recreation, or industry shall not be allowed;

(i) The creation of tastes or odors or toxic or other conditions that are deleterious to fish or other aquatic life or affect the potability of drinking water or the palatability of fish or shellfish shall not be allowed;

(j) The formation of appreciable bottom or sludge deposits or the formation of any organic or inorganic deposits deleterious to fish or other aquatic life or injurious to public health, recreation, or industry shall not be allowed;

(k) Objectionable discoloration, scum, oily sleek or floating solids, or coating of aquatic life with oil films shall not be allowed;

(l) Aesthetic conditions offensive to the human senses of sight, taste, smell, or touch shall not be allowed;

(m) Radioisotope concentrations shall not exceed maximum permissible concentrations (MPC's) in drinking water, edible fishes or shellfishes, wildlife, irrigated crops, livestock and dairy products, or pose an external radiation hazard;

(n) (A) The concentration of total dissolved gas relative to atmospheric pressure at the point of sample collection shall not exceed 110 percent of saturation, except when stream flow exceeds the ten-year, seven-day average flood. However, for Hatchery receiving waters and waters of less than two feet in depth, the concentration of total dissolved gas relative to atmospheric pressure at the point of sample collection shall not exceed 105 percent of saturation;

(B) The Commission may modify the total dissolved gas criteria in the Columbia River for the purpose of allowing increased spill for salmonid migration. The Commission must find that:

(i) Failure to act would result in greater harm to salmonid stock survival through in-river migration than would occur by increased spill;

(ii) The modified total dissolved gas criteria associated with the increased spill provides a reasonable balance of the risk of impairment due to elevated total dissolved gas to both resident biological communities and other migrating fish and to migrating adult and juvenile salmonids when compared to other options for in-river migration of salmon;

(iii) Adequate data will exist to determine compliance with the standards; and

(iv) Biological monitoring is occurring to document that the migratory salmonid and resident biological communities are being protected.

(C) The Commission will give public notice and notify all known interested parties and will make provision for opportunity to be heard and comment on the evidence presented by others, except that the Director may modify the total dissolved gas criteria for emergencies for a period not exceeding 48 hours;

(D) The Commission may, at its discretion, consider alternative modes of migration.

(o) Total Dissolved Solids: Guide concentrations listed below shall not be exceeded unless otherwise specifically authorized by DEQ upon such conditions as it may deem necessary to carry out the general intent of this plan and to protect the beneficial uses set forth in OAR 340-41-602:

(A) Columbia River — 200.0 mg/l;

(B) John Day River and Tributaries — 500.0 mg/l.

(p) Toxic Substances:

(A) Toxic substances shall not be introduced above natural background levels in the waters of the state in amounts, concentrations, or combinations which may be harmful, may chemically change to harmful forms in the environment, or may accumulate in sediments or bioaccumulate in aquatic life or wildlife to levels that adversely affect public health, safety, or welfare; aquatic life; wildlife; or other designated beneficial uses;

(B) Levels of toxic substances shall not exceed the criteria listed in **Table 20** which were based on criteria established by EPA and published in **Quality Criteria for Water (1986)**, unless otherwise noted;

(C) The criteria in paragraph (B) of this subsection shall apply unless data from scientifically valid studies demonstrate that the most sensitive designated beneficial uses will not be adversely affected by exceeding a criterion or that a more restrictive criterion is warranted to protect beneficial uses, as accepted by the Department on a site specific basis. Where no published EPA criteria exist for a toxic substance, public health advisories and other published scientific literature may be considered and used, if appropriate, to set guidance values;

(D) Bio-assessment studies such as laboratory bioassays or instream measurements of indigenous biological communities, shall be conducted, as the Department deems necessary, to monitor the toxicity of complex effluents, other suspected discharges or chemical substances without numeric criteria, to aquatic life. These studies, properly conducted in accordance with standard testing procedures, may be considered as scientifically valid data for the purposes of paragraph (C) of this subsection. If toxicity occurs, the Department shall evaluate and implement measures necessary to reduce toxicity on a case-by-case basis.

(3) Where the naturally occurring quality parameters of waters of the John Day Basin are outside the numerical limits of the above assigned water quality standards, the naturally occurring water quality shall be the standard. However, in such cases special restrictions, described in OAR 340-41-026(3)(a)(C)(iii), apply to discharges that affect dissolved oxygen.

(4) Mixing zones:

(a) The Department may allow a designated portion of a receiving water to serve as a zone of dilution for wastewaters and receiving waters to mix thoroughly and this zone will be defined as a mixing zone;

(b) The Department may suspend all or part of the water quality standards, or set less restrictive standards, in the defined mixing zone, provided that the following conditions are met:

(A) The water within the mixing zone shall be free of:

(i) Materials in concentrations that will cause acute toxicity to aquatic life as measured by a Department approved bioassay method. Acute toxicity is lethality to aquatic life as measured by a significant difference in lethal concentration between the control and 100 percent effluent in an acute bioassay test. Lethality in 100 percent effluent may be allowed due to ammonia and chlorine only when it is demonstrated on a case-by-case basis that immediate dilution of the effluent within the mixing zone reduces toxicity below lethal concentrations. The Department may on a case-by-case basis establish a zone of immediate dilution if appropriate for other parameters;

(ii) Materials that will settle to form objectionable deposits;

(iii) Floating debris, oil, scum, or other materials that cause nuisance conditions;

(iv) Substances in concentrations that produce deleterious amounts of fungal or bacterial growths.

(B) The water outside the boundary of the mixing zone shall:

(i) Be free of materials in concentrations that will cause chronic (sublethal) toxicity. Chronic toxicity is measured as the concentration that causes long-term sublethal effects, such as significantly impaired growth or reproduction in aquatic organisms, during a testing period based on test species life cycle. Procedures and end points will be specified by the Department in wastewater discharge permits;

(ii) Meet all other water quality standards under normal annual low flow conditions.

(c) The limits of the mixing zone shall be described in the wastewater discharge permit. In determining the location, surface area, and volume of a mixing zone area, the Department may use appropriate mixing zone guidelines to assess the biological, physical, and chemical character of receiving waters, and effluent, and the most appropriate placement of the outfall, to protect instream water quality, public health, and other beneficial uses. Based on receiving water and effluent characteristics, the Department shall define a mixing zone in the immediate area of a wastewater discharge to:

(A) Be as small as feasible;

(B) Avoid overlap with any other mixing zones to the extent possible and be less than the total stream width as necessary to allow passage of fish and other aquatic organisms;

(C) Minimize adverse effects on the indigenous biological community especially when species are present that warrant special protection for their economic importance, tribal significance, ecological uniqueness, or for other similar reasons as determined by the Department and does not block the free passage of aqutic life;

(D) Not threaten public health;

(E) Minimize adverse effects on other designated beneficial uses outside the mixing zone.

(d) The Department may request the applicant of a permitted discharge for which a mixing zone is required, to submit all information necessary to define a mixing zone, such as:

(A) Type of operation to be conducted;

(B) Characteristics of effluent flow rates and composition;

(C) Characteristics of low flows of receiving waters;

(D) Description of potential environmental effects;

(E) Proposed design for outfall structures.

(e) The Department may, as necessary, require mixing zone monitoring studies and/or bioassays to be conducted to evaluate water quality or biological status within and outside the mixing zone boundary.

(f) The Department may change mixing zone limits or require the relocation of an outfall if it determines that the water quality within the mixing zone adversely affects any existing beneficial uses in the receiving waters.

(g) **Alternate requirements for mixing zones**: For some existing or proposed discharges to some receiving streams, it may not be practicable to treat wastewater to meet instream water quality standards at the point of discharge or within a short distance from the point of discharge. Some of these discharges could be allowed without impairing the overall ecological integrity of the receiving streams, or may provide an overall benefit to the receiving stream. This section specifies the conditions and circumstances under which a mixing zone may be allowed by the Department that extends beyond the immediate area around a discharge point, or that extends across a stream width. An alternate mixing zone may be approved if the applicant demonstrates to the Department's satisfaction that the discharge (A) creates an overall environmental benefit, or (B) is to a constructed water course, or (C) is insignificant. The three circumstances under which alternate mixing zones may be established are described further below.

(A) **Overall environmental benefit**.

(i) Qualifying for alternate mixing zone based on overall environmental benefit: In order to qualify for an alternate mixing zone based on a finding of overall environmental benefit, the discharger must demonstrate to the Department's satisfaction the following:

(a) That all practical strategies have been or will be implemented to minimize the pollutant loads in the effluent; and

(b) For proposed increased discharges, the current actual discharge and mixing zone does not meet the requirements of a standard mixing zone; and

(c) Either that, on balance, an environmental benefit would be lost if the discharge did not occur, or that the discharger is prepared to undertake other actions that will mitigate the effect of the discharge to an extent resulting in a net environmental benefit to the receiving stream.

(d) For the purposes of this rule, the term "practical" shall include environmental impact, availability of alternatives, cost of alternatives, and other relevant factors.

(ii) Studies required and evaluation of studies: In order to demonstrate that, on balance, an environmental benefit will result from the discharge, the following information shall be provided by the applicant:

(a) The effluent flow and pollutant loads that are detected or expected in the effluent, by month, both average and expected worst case discharges. The parameters to be evaluated include at a minimum temperature, biochemical oxygen demand, total suspended solids, total dissolved solids, pH, settleable solids, e. coli bacteria, oil and grease, any pollutants listed in Table 20 of this rule division, and any pollutant for which the receiving stream has been designated by the Department as water quality limited; and

(b) Receiving stream flow, by month; and

(c) The expected impact of the discharge, by month, on the receiving stream for the entire proposed mixing zone area for all of the pollutants listed above. Included in this analysis shall be a comparison of the receiving stream water quality with the discharge and without the

discharge; and

(d) A description of fish, other vertebrate populations, and macroinvertebrates that reside in or are likely to pass through the proposed mixing zone, including expected location (if known), species identification, stage of development, and time of year when their presence is expected. For existing discharges, the applicant shall provide the same information for similar nearby streams that are unaffected by wastewater discharges. In addition, any threatened or endangered species in the immediate vicinity of the receiving stream shall be identified; and

(e) The expected impact of the discharge on aquatic organisms and/or fish passage, including any expected negative impacts from the effluent attracting fish where that is not desirable; and

(f) A description of the expected environmental benefits to be derived from the discharge or other mitigation measures proposed by the applicant, including but not limited to improvements in water quality, improvements in fish passage, and improvements in aquatic habitat. If the applicant proposes to undertake mitigation measures designed to provide environmental benefits (e.g., purchasing water or water conservation rights to increase stream flows or establishing stream cover to decrease temperature), the applicant shall describe the mitigation measures in detail, including a description of the steps it will take to ensure that the benefits of the mitigation measures are attained and are not lost or diminished over time.

(g) Some or all of the above study requirements may be waived by the Department, if the Department determines that the information is not needed. In the event that the Department does waive some or all of the above study requirements, the basis for waiving the requirements will be included in the permit evaluation report upon the next permit renewal or modification relating to the mixing zone.

(h) Upon request of the Department, the applicant shall conduct additional studies to further evaluate the impact of the discharge, which may include whole effluent toxicity testing, stream surveys for water quality, stream surveys for fish and other aquatic organisms, or other studies as specified by the Department.

(i) In evaluating whether an existing or proposed increase in an existing discharge would result in a net environmental benefit, the applicant shall use the native biological community in a nearby, similar stream that is unaffected by wastewater discharges. The Department shall consider all information generated as required in this rule and other relevant information. The evaluation shall consider benefits to the native aquatic biological community only.

(iii) Permit conditions: Upon determination by the Department that the discharge and mitigation measures (if any) will likely result in an overall environmental benefit, the Department shall include appropriate permit conditions to insure that the environmental benefits are attained and continue. Such permit conditions may include but not be limited to:

(a) Maximum allowed effluent flows and pollutant loads;

(b) Requirements to maintain land ownership, easements, contracts, or other legally binding measures necessary to assure that mitigation measures, if any, remain in place and effective;

(c) Special operating conditions;

(d) Monitoring and reporting requirements; and

(e) Studies to evaluate the effectiveness of mitigation measures.

(B) **Constructed water course**: A mixing zone may be extended through a constructed water course and into a natural water course. For the purposes of this rule, a constructed water course is one that was constructed for irrigation, site drainage, or wastewater conveyance, and

has the following characteristics:

(i) Irrigation flows, stormwater runoff, or wastewater flows have replaced natural streamflow regimes; and

(ii) The channel form is greatly simplified in lengthwise and cross sectional profiles; and

(iii) Physical and biological characteristics that differ significantly from nearby natural streams; and

(iv) A much lower diversity of aquatic species than found in nearby natural streams; and

(v) If the constructed water course is an irrigation canal, then it must have effective fish screens in place to qualify as a constructed water course.

(C) **Insignificant discharges**: Insignificant discharges are those that either by volume, pollutant characteristics, and/or temporary nature are expected to have little if any impact on beneficial uses in the receiving stream, and for which the extensive evaluations required for discharges to smaller streams are not warranted. For the purposes of this rule, only filter backwash discharges and underground storage tank cleanups are considered insignificant discharges.

(D) **Other requirements for alternate mixing zones**: The following are additional requirements for dischargers requesting an alternate mixing zone:

(i) Most discharges that qualify for an alternate mixing zone will extend through the receiving stream until a larger stream is reached, where thorough mixing of the effluent can occur and where the edge of the allowed mixing zone will be located. The portion of the mixing zone in the larger stream must meet all of the requirements of the standard mixing zone, including not blocking aquatic life passage; and

(ii) An alternate mixing zone shall not be granted if a municipal drinking water intake is located within the proposed mixing zone, and the discharge has a significant adverse impact on the drinking water source; and

(iii) The discharge will not pose an unreasonable hazard to the environment or pose a significant health risk, considering the likely pathways of exposure; and

(iv) The discharge shall not be acutely toxic to organisms passing through the mixing zone; and

(v) An alternate mixing zone shall not be granted if the substances discharged may accumulate in the sediments or bioaccumulate in aquatic life or wildlife to levels that adversely affect public health, safety, or welfare; aquatic life; wildlife; or other designated beneficial uses; and

(vi) In the event that the receiving stream is water quality limited, the requirements for discharges to water quality limited streams supersede this rule.

(5) Testing methods: The analytical testing methods for determining compliance with the water quality standards contained in this rule shall be in accordance with the most recent edition of **Standard Methods for the Examination of Water and Waste Water published jointly by the American Public Health Association, American Water Works Association, and Water Pollution Control Federation,** unless the Department has published an applicable superseding method, in which case testing shall be in accordance with the superseding method; provided, however, that testing in accordance with an alternative method shall comply with this rule if the Department has published the method or has approved the method in writing.

[**Publications:** The publication(s) referred to or incorporated by reference in this rule are available from the office of the Department of Environmental Quality.]

Stat. Auth.: ORS 468B.035 & 468.735; ORS 468B.048
Stat. Implemented: ORS 468B.048
Hist.: DEQ 128, f. & ef. 1-21-77; DEQ 1-1980, f. & ef. 1-9-80; DEQ 18-1987, f. & ef. 9-4-87; DEQ 14-1991, f. & cert. ef. 8-13-91; DEQ 17-1992, f. & cert. ef. 8-7-92 (and corrected 8-13-92)

Minimum Design Criteria for Treatment and Control of Wastes

340-41-615 Subject to the implementation program set forth in OAR 340-41-120, prior to discharge of any wastes from any new or modified facility to any waters of the John Day River Basin, such wastes shall be treated and controlled in facilities designed in accordance with the following minimum criteria. (In designing treatment facilities, average conditions and a normal range of variability are generally used in establishing design criteria. A facility once completed and placed in operation should operate at or near the design limit most of the time but may operate below the design criteria limit at times due to variables which are unpredictable or uncontrollable. This is particularly true for biological treatment facilities. The actual operating limits are intended to be established by permit pursuant to ORS 468.740 and recognize that the actual performance level may at times be less than the design criteria).

(1) Sewage wastes:

(a) During periods of low stream flows (approximately May 1 to October 31): Treatment resulting in monthly average effluent concentra-tions not to exceed 20 mg/l of BOD and 20 mg/l of SS or equivalent control;

(b) During the period of high stream flows (approximately November 1 to April 30): A minimum of secondary treatment or equivalent control and unless otherwise specifically authorized by the Department, operation of all waste treatment and control facilities at maximum practicable efficiency and effectiveness so as to minimize waste discharges to public waters;

(c) Effluent BOD concentrations in mg/l, divided by the dilution factor (ratio of receiving stream flow to effluent flow) shall not exceed one unless otherwise approved by the EQC;

(d) Sewage wastes shall be disinfected, after treatment, equivalent to thorough mixing with sufficient chlorine to provide a residual of at least one part per million after 60 minutes of contact time unless otherwise specifically authorized by permit;

(e) Positive protection shall be provided to prevent bypassing raw or inadequately treated sewage to public waters unless otherwise approved by the Department where elimination of inflow and infiltration would be necessary but not presently practicable;

(f) More stringent waste treatment and control requirements may be imposed where special conditions may require.

(2) Industrial wastes:

(a) After maximum practicable inplant control, a minimum of secondary treatment or equivalent control (reduction of suspended solids and organic material where present in significant quantities, effective disinfection where bacterial organisms of public health significance are present, and control of toxic or other deleterious substances);

(b) Specific industrial waste treatment requirements shall be determined on an individual basis in accordance with the provisions of this plan, applicable federal requirements, and the following:

(A) The uses which are or may likely be made of the receiving stream;

(B) The size and nature of flow of the receiving stream;

(C) The quantity and quality of wastes to be treated; and

(D) The presence or absence of other sources of pollution on the same watershed.

(c) Where industrial, commercial, or agricul-tural effluents contain significant quantities of potentially toxic elements, treatment requirements shall be determined utilizing appropriate bioassays;

(d) Industrial cooling waters containing significant heat loads shall be subjected to offstream cooling or heat recovery prior to discharge to public waters;

(e) Positive protection shall be provided to prevent bypassing of raw or inadequately treated industrial wastes to any public waters;

(f) Facilities shall be provided to prevent and contain spills of potentially toxic or hazardous materials and a positive program for containment and cleanup of such spills should they occur shall be developed and maintained.

Stat. Auth.: ORS Ch. 468
Hist.: DEQ 128, f. & ef. 1-21-77

Umatilla Basin

Beneficial Water Uses to be Protected

340-41-642 Water quality in the Umatilla River Basin (see **Figures 1** and **12**) shall be managed to protect the recognized beneficial uses as indicated in **Table 11**.

Stat. Auth.: ORS Ch. 468
Hist.: DEQ 128, f. & ef. 1-21-77

Water Quality Standards Not to be Exceeded (To be Adopted Pursuant to ORS 468.735 and Enforceable Pursuant to ORS 468.720, 468.990, and 468.992)

340-41-645 (1) Notwithstanding the water quality standards contained below, the highest and best practicable treatment and/or control of wastes, activities, and flows shall in every case be provided so as to maintain dissolved oxygen and overall water quality at the highest possible levels and water temperatures, coliform bacteria concentrations, dissolved chemical substances, toxic materials, radioactivity, turbidities, color, odor, and other deleterious factors at the lowest possible levels.

(2) No wastes shall be discharged and no activities shall be conducted which either alone or in combination with other wastes or activities will cause violation of the following standards in the waters of the Umatilla River Basin:

(a) Dissolved oxygen (DO): The changes adopted by the Commission on January 11, 1996, become effective July 1, 1996. Until that time, the requirements of this rule that were in effect on January 10, 1996, apply:

(A) For waterbodies identified by the Department as providing salmonid spawning, during the periods from spawning until fry emergence from the gravels, the following criteria apply:

(i) The dissolved oxygen shall not be less than 11.0 mg/l. However, if the minimum intergravel dissolved oxygen, measured as a spatial median, is 8.0 mg/l or greater, then the DO criterion is 9.0 mg/l;

(ii) Where conditions of barometric pressure, altitude, and temperature preclude attainment of the 11.0 mg/l or 9.0 mg/l criteria, dissolved oxygen levels shall not be less than 95 percent of saturation.

(B) For waterbodies identified by the Department as providing salmonid spawning during the period from spawning until fry emergence from the gravels, the spatial median intergravel dissolved oxygen concentration shall not fall below 6.0 mg/l;

(C) A spatial median of 8.0 mg/l intergravel dissolved oxygen level shall be used to identify areas where the recognized beneficial use of salmonid spawning, egg incubation and fry emergence from the egg and from the gravels may be impaired and therefore require action by the Department. Upon determination that the spatial median intergravel dissolved oxygen concentration is below 8.0 mg/l, the Department may, in accordance with priorities established by the Department for evaluating water quality impaired waterbodies, determine whether to list the waterbody as water quality limited under the Section 303(d) of the Clean Water Act, initiate pollution control strategies as warranted, and where needed cooperate with appropriate designated management agencies to evaluate and implement necessary best management practices for nonpoint source pollution control;

(D) For waterbodies identified by the Department as providing cold-water aquatic life, the dissolved oxygen shall not be less than 8.0 mg/l as an absolute minimum. Where conditions of barometric pressure, altitude, and temperature preclude attainment of the 8.0 mg/l, dissolved oxygen shall not be less than 90 percent of saturation. At the discretion of the Department, when the Department determines that adequate information exists, the dissolved oxygen shall not fall below 8.0 mg/l as a 30-day mean minimum, 6.5 mg/l as a seven-day minimum mean, and shall not fall below 6.0 mg/l as an absolute minimum **(Table 21)**;

(E) For waterbodies identified by the Department as providing cool-water aquatic life, the dissolved oxygen shall not be less than 6.5 mg/l as an absolute minimum. At the discretion of the Department, when the Department determines that adequate information exists, the dissolved oxygen shall not fall below 6.5 mg/l as a 30-day mean minimum, 5.0 mg/l as a seven-day minimum mean, and shall not fall below 4.0 mg/l as an absolute minimum **(Table 21)**;

(F) For waterbodies identified by the Department as providing warm-water aquatic life, the dissolved oxygen shall not be less than 5.5 mg/l as an absolute minimum. At the discretion of the Department, when the Department determines that adequate information exists, the dissolved oxygen shall not fall below 5.5 mg/l as a 30-day mean minimum, and shall not fall below 4.0 mg/l as an absolute minimum **(Table 21)**;

(b) Temperature: The changes adopted by the Commission on January 11, 1996, become effective July 1, 1996. Until that time, the requirements of this rule that were in effect on January 10, 1996, apply. The method for measuring the numeric temperature criteria specified in this rule is defined in OAR 340-41-006(54):

(A) To accomplish the goals identified in OAR 340-41-120(11), unless specifically allowed under a Department-approved surface water temperature management plan as required under OAR 340-41-026(3)(a)(D), no measurable surface water temperature increase resulting from anthropogenic activities is allowed:

(i) In a basin for which salmonid fish rearing is a designated beneficial use, and in which surface water temperatures exceed 64.0°F (17.8°C);

(ii) In the Columbia River or its associated sloughs and channels from the mouth to river mile 309 when surface water temperatures exceed 68.0°F (20.0°C);

(iii) In waters and periods of the year determined by the Department to support native salmonid spawning, egg incubation, and fry emergence from the egg and from the gravels in a basin which exceeds 55.0°F (12.8°C);

(iv) In waters determined by the Department to support or to be necessary to maintain the viability of native Oregon bull trout, when surface water temperatures exceed 50.0°F (10.0°C);

(v) In waters determined by the Department to be ecologically significant cold-water refugia;

(vi) In stream segments containing federally listed Threatened and Endangered species if the increase would impair the biological integrity of the Threatened and Endangered population;

(vii) In Oregon waters when the dissolved oxygen (DO) levels are within 0.5 mg/l or 10 percent saturation of the water column or intergravel DO criterion for a given stream reach or subbasin;

(viii) In natural lakes.

(B) An exceedance of the numeric criteria identified in subparagraphs (A)(i) through (iv) of this subsection will not be deemed a temperature standard violation if it occurs when the air temperature during the warmest seven-day period of the year exceeds the 90th percentile of the seven-day average daily maximum air temperature calculated in a yearly series over the historic record. However, during such periods, the anthropogenic sources must still continue to comply with their surface water temperature management plans developed under OAR 340-41-026(3)(a)(D);

(C) Any source may petition the Commission for an exception to subparagraphs (A)(i) through (viii) of this subsection for discharge above the identified criteria if:

(i) The source provides the necessary scientific information to describe how the designated beneficial uses would not be adversely impacted; or

(ii) A source is implementing all reasonable management practices or measures; its activity will not significantly affect the beneficial uses; and the environmental cost of treating the parameter to the level necessary to assure full protection would outweigh the risk to the resource.

(c) Turbidity (Nephelometric Turbidity Units, NTU): No more than a ten percent cumulative increase in natural stream turbidities shall be allowed, as measured relative to a control point immediately upstream of the turbidity causing activity. However, limited duration activities necessary to address an emergency or to accommodate essential dredging, construction or other legitimate activities and which cause the standard to be exceeded may be authorized provided all practicable turbidity control techniques have been applied and one of the following has been granted:

(A) Emergency activities: Approval coordinated by DEQ with the Department of Fish and Wildlife under conditions they may prescribe to accommodate response to emergencies or to protect public health and welfare;

(B) Dredging, Construction or other Legitimate Activities: Permit or certification authorized under terms of Section 401 or 404 (Permits and Licenses, Federal Water Pollution Control Act) or OAR 141-85-100 et. seq. (Removal and Fill Permits, Division of State Lands), with limitations and conditions governing the activity set forth in the permit or certificate.

(d) pH (hydrogen ion concentration): pH values shall not fall outside the ranges identified in paragraphs (A) and (B) of this subsection. The following exception applies: Waters impounded by dams existing on January 1, 1996, which have pHs that exceed the criteria shall

not be considered in violation of the standard if the Department determines that the exceedance would not occur without the impoundment and that all practicable measures have been taken to bring the pH in the impounded waters into compliance with the criteria:

(A) Columbia River (river miles 247 to 309): 7.0 - 8.5;

(B) All other Basin streams: 6.5 - 9.0. When greater than 25 percent of ambient measurements taken between June and September are greater than pH 8.7, and as resources are available according to priorities set by the Department, the Department shall determine whether the values higher than 8.7 are anthropogenic or natural in origin.

(e) Bacteria standards:

(A) Numeric Criteria: Organisms of the coliform group commonly associated with fecal sources (MPN or equivalent membrane filtration using a representative number of samples) shall not exceed the criteria described in subparagraphs (i) and (ii) of this paragraph. Freshwaters:

(i) A 30-day log mean of 126 *E. coli* organisms per 100 ml, based on a minimum of five (5) samples;

(ii) No single sample shall exceed 406 *E. coli* organisms per 100 ml;

(B) Raw Sewage Prohibition: No sewage shall be discharged into or in any other manner be allowed to enter the waters of the State unless such sewage has been treated in a manner approved by the Department or otherwise allowed by these rules;

(C) Animal Waste: Runoff contaminated with domesticated animal wastes shall be minimized and treated to the maximum extent practicable before it is allowed to enter waters of the State;

(D) Effluent Limitations and Water Quality Limited Waterbodies: Effluent limitations to implement the criteria in this rule are found in OAR 340-41-120(12) through (16). Implementation of the criteria in this rule in water quality limited waterbodies is described in OAR 340-41-026(3)(a)(I) and OAR 340-41-120(17).

(f) Bacterial pollution or other conditions deleterious to waters used to domestic purposes, livestock watering, irrigation, or bathing, or otherwise injurious to public health shall not be allowed;

(g) The liberation of dissolved gases, such as carbon dioxide, hydrogen sulfide, or other gases, in sufficient quantities to cause objectionable odors or to be deleterious to fish or other aquatic life, navigation, recreation, or other reasonable uses made of such waters shall not be allowed;

(h) The development of fungi or other growths having a deleterious effect on stream bottoms, fish or other aquatic life, or which are injurious to health, recreation, or industry shall not be allowed;

(i) The creation of tastes or odors or toxic or other conditions that are deleterious to fish or other aquatic life or affect the potability of drinking water or the palatability of fish or shellfish shall not be allowed;

(j) The formation of appreciable bottom or sludge deposits or the formation of any organic or inorganic deposits deleterious to fish or other aquatic life or injurious to public health, recreation, or industry shall not be allowed;

(k) Objectionable discoloration, scum, oily sleek or floating solids, or coating of aquatic life with oil films shall not be allowed;

(l) Aesthetic conditions offensive to the human senses of sight, taste, smell, or touch shall

not be allowed;

(m) Radioisotope concentrations shall not exceed maximum permissible concentrations (MPC's) in drinking water, edible fishes or shellfishes, wildlife, irrigated crops, livestock and dairy products, or pose an external radiation hazard;

(n) (A) The concentration of total dissolved gas relative to atmospheric pressure at the point of sample collection shall not exceed 110 percent of saturation, except when stream flow exceeds the ten-year, seven-day average flood. However, for Hatchery receiving waters and waters of less than two feet in depth, the concentration of total dissolved gas relative to atmospheric pressure at the point of sample collection shall not exceed 105 percent of saturation;

(B) The Commission may modify the total dissolved gas criteria in the Columbia River for the purpose of allowing increased spill for salmonid migration. The Commission must find that:

(i) Failure to act would result in greater harm to salmonid stock survival through in-river migration than would occur by increased spill;

(ii) The modified total dissolved gas criteria associated with the increased spill provides a reasonable balance of the risk of impairment due to elevated total dissolved gas to both resident biological communities and other migrating fish and to migrating adult and juvenile salmonids when compared to other options for in-river migration of salmon;

(iii) Adequate data will exist to determine compliance with the standards; and

(iv) Biological monitoring is occurring to document that the migratory salmonid and resident biological communities are being protected.

(C) The Commission will give public notice and notify all known interested parties and will make provision for opportunity to be heard and comment on the evidence presented by others, except that the Director may modify the total dissolved gas criteria for emergencies for a period not exceeding 48 hours;

(D) The Commission may, at its discretion, consider alternative modes of migration.

(o) Total Dissolved Solids: Guide concentrations listed below shall not be exceeded unless otherwise specifically authorized by DEQ upon such conditions as it may deem necessary to carry out the general intent of this plan and to protect the beneficial uses set forth in OAR 340-41-642: Columbia River — 200.0 mg/l;

(p) Toxic Substances:

(A) Toxic substances shall not be introduced above natural background levels in the waters of the state in amounts, concentrations, or combinations which may be harmful, may chemically change to harmful forms in the environment, or may accumulate in sediments or bioaccumulate in aquatic life or wildlife to levels that adversely affect public health, safety, or welfare; aquatic life; wildlife; or other designated beneficial uses;

(B) Levels of toxic substances shall not exceed the criteria listed in **Table 20** which were based on criteria established by EPA and published in **Quality Criteria for Water (1986)**, unless otherwise noted;

(C) The criteria in paragraph (B) of this subsection shall apply unless data from scientifically valid studies demonstrate that the most sensitive designated beneficial uses will not be adversely affected by exceeding a criterion or that a more restrictive criterion is warranted to protect beneficial uses, as accepted by the Department on a site specific basis. Where no published EPA criteria exist for a toxic substance, public health advisories and other published

scientific literature may be considered and used, if appropriate, to set guidance values;

(D) Bio-assessment studies such as laboratory bioassays or instream measurements of indigenous biological communities, shall be conducted, as the Department deems necessary, to monitor the toxicity of complex effluents, other suspected discharges or chemical substances without numeric criteria, to aquatic life. These studies, properly conducted in accordance with standard testing procedures, may be considered as scientifically valid data for the purposes of paragraph (C) of this subsection. If toxicity occurs, the Department shall evaluate and implement measures necessary to reduce toxicity on a case-by-case basis.

(3) Where the naturally occurring quality parameters of waters of the Umatilla River Basin are outside the numerical limits of the above assigned water quality standards, the naturally occurring water quality shall be the standard. However, in such cases special restrictions, described in OAR 340-41-026(3)(a)(C)(iii), apply to discharges that affect dissolved oxygen.

(4) Mixing zones:

(a) The Department may allow a designated portion of a receiving water to serve as a zone of dilution for wastewaters and receiving waters to mix thoroughly and this zone will be defined as a mixing zone;

(b) The Department may suspend all or part of the water quality standards, or set less restrictive standards, in the defined mixing zone, provided that the following conditions are met:

(A) The water within the mixing zone shall be free of:

(i) Materials in concentrations that will cause acute toxicity to aquatic life as measured by a Department approved bioassay method. Acute toxicity is lethality to aquatic life as measured by a significant difference in lethal concentration between the control and 100 percent effluent in an acute bioassay test. Lethality in 100 percent effluent may be allowed due to ammonia and chlorine only when it is demonstrated on a case-by-case basis that immediate dilution of the effluent within the mixing zone reduces toxicity below lethal concentrations. The Department may on a case-by-case basis establish a zone of immediate dilution if appropriate for other parameters;

(ii) Materials that will settle to form objectionable deposits;

(iii) Floating debris, oil, scum, or other materials that cause nuisance conditions;

(iv) Substances in concentrations that produce deleterious amounts of fungal or bacterial growths.

(B) The water outside the boundary of the mixing zone shall:

(i) Be free of materials in concentrations that will cause chronic (sublethal) toxicity. Chronic toxicity is measured as the concentration that causes long-term sublethal effects, such as significantly impaired growth or reproduction in aquatic organisms, during a testing period based on test species life cycle. Procedures and end points will be specified by the Department in wastewater discharge permits;

(ii) Meet all other water quality standards under normal annual low flow conditions.

(c) The limits of the mixing zone shall be described in the wastewater discharge permit. In determining the location, surface area, and volume of a mixing zone area, the Department may use appropriate mixing zone guidelines to assess the biological, physical, and chemical character of receiving waters, and effluent, and the most appropriate placement of the outfall, to protect instream water quality, public health, and other beneficial uses. Based on receiving water and effluent characteristics, the Department shall define a mixing zone in the immediate

area of a wastewater discharge to:

(A) Be as small as feasible;

(B) Avoid overlap with any other mixing zones to the extent possible and be less than the total stream width as necessary to allow passage of fish and other aquatic organisms;

(C) Minimize adverse effects on the indigenous biological community especially when species are present that warrant special protection for their economic importance, tribal significance, ecological uniqueness, or for other similar reasons as determined by the Department and does not block the free passage of aquatic life;

(D) Not threaten public health;

(E) Minimize adverse effects on other designated beneficial uses outside the mixing zone.

(d) The Department may request the applicant of a permitted discharge for which a mixing zone is required, to submit all information necessary to define a mixing zone, such as:

(A) Type of operation to be conducted;

(B) Characteristics of effluent flow rates and composition;

(C) Characteristics of low flows of receiving waters;

(D) Description of potential environmental effects;

(E) Proposed design for outfall structures.

(e) The Department may, as necessary, require mixing zone monitoring studies and/or bioassays to be conducted to evaluate water quality or biological status within and outside the mixing zone boundary;

(f) The Department may change mixing zone limits or require the relocation of an outfall if it determines that the water quality within the mixing zone adversely affects any existing beneficial uses in the receiving waters.

(g) **Alternate requirements for mixing zones**: For some existing or proposed discharges to some receiving streams, it may not be practicable to treat wastewater to meet instream water quality standards at the point of discharge or within a short distance from the point of discharge. Some of these discharges could be allowed without impairing the overall ecological integrity of the receiving streams, or may provide an overall benefit to the receiving stream. This section specifies the conditions and circumstances under which a mixing zone may be allowed by the Department that extends beyond the immediate area around a discharge point, or that extends across a stream width. An alternate mixing zone may be approved if the applicant demonstrates to the Department's satisfaction that the discharge (A) creates an overall environmental benefit, or (B) is to a constructed water course, or (C) is insignificant. The three circumstances under which alternate mixing zones may be established are described further below.

(A) **Overall environmental benefit**.

(i) Qualifying for alternate mixing zone based on overall environmental benefit: In order to qualify for an alternate mixing zone based on a finding of overall environmental benefit, the discharger must demonstrate to the Department's satisfaction the following:

(a) That all practical strategies have been or will be implemented to minimize the pollutant loads in the effluent; and

(b) For proposed increased discharges, the current actual discharge and mixing zone does not meet the requirements of a standard mixing zone; and

(c) Either that, on balance, an environmental benefit would be lost if the discharge did not

occur, or that the discharger is prepared to undertake other actions that will mitigate the effect of the discharge to an extent resulting in a net environmental benefit to the receiving stream.

(d) For the purposes of this rule, the term "practical" shall include environmental impact, availability of alternatives, cost of alternatives, and other relevant factors.

(ii) Studies required and evaluation of studies: In order to demonstrate that, on balance, an environmental benefit will result from the discharge, the following information shall be provided by the applicant:

(a) The effluent flow and pollutant loads that are detected or expected in the effluent, by month, both average and expected worst case discharges. The parameters to be evaluated include at a minimum temperature, biochemical oxygen demand, total suspended solids, total dissolved solids, pH, settleable solids, e. coli bacteria, oil and grease, any pollutants listed in Table 20 of this rule division, and any pollutant for which the receiving stream has been designated by the Department as water quality limited; and

(b) Receiving stream flow, by month; and

(c) The expected impact of the discharge, by month, on the receiving stream for the entire proposed mixing zone area for all of the pollutants listed above. Included in this analysis shall be a comparison of the receiving stream water quality with the discharge and without the discharge; and

(d) A description of fish, other vertebrate populations, and macroinvertebrates that reside in or are likely to pass through the proposed mixing zone, including expected location (if known), species identification, stage of development, and time of year when their presence is expected. For existing discharges, the applicant shall provide the same information for similar nearby streams that are unaffected by wastewater discharges. In addition, any threatened or endangered species in the immediate vicinity of the receiving stream shall be identified; and

(e) The expected impact of the discharge on aquatic organisms and/or fish passage, including any expected negative impacts from the effluent attracting fish where that is not desirable; and

(f) A description of the expected environmental benefits to be derived from the discharge or other mitigation measures proposed by the applicant, including but not limited to improvements in water quality, improvements in fish passage, and improvements in aquatic habitat. If the applicant proposes to undertake mitigation measures designed to provide environmental benefits (e.g., purchasing water or water conservation rights to increase stream flows or establishing stream cover to decrease temperature), the applicant shall describe the mitigation measures in detail, including a description of the steps it will take to ensure that the benefits of the mitigation measures are attained and are not lost or diminished over time.

(g) Some or all of the above study requirements may be waived by the Department, if the Department determines that the information is not needed. In the event that the Department does waive some or all of the above study requirements, the basis for waiving the requirements will be included in the permit evaluation report upon the next permit renewal or modification relating to the mixing zone.

(h) Upon request of the Department, the applicant shall conduct additional studies to further evaluate the impact of the discharge, which may include whole effluent toxicity testing, stream surveys for water quality, stream surveys for fish and other aquatic organisms, or other studies as specified by the Department.

(i) In evaluating whether an existing or proposed increase in an existing discharge would result in a net environmental benefit, the applicant shall use the native biological community in a

nearby, similar stream that is unaffected by wastewater discharges. The Department shall consider all information generated as required in this rule and other relevant information. The evaluation shall consider benefits to the native aquatic biological community only.

(iii) Permit conditions: Upon determination by the Department that the discharge and mitigation measures (if any) will likely result in an overall environmental benefit, the Department shall include appropriate permit conditions to insure that the environmental benefits are attained and continue. Such permit conditions may include but not be limited to:

(a) Maximum allowed effluent flows and pollutant loads;

(b) Requirements to maintain land ownership, easements, contracts, or other legally binding measures necessary to assure that mitigation measures, if any, remain in place and effective;

(c) Special operating conditions;

(d) Monitoring and reporting requirements; and

(e) Studies to evaluate the effectiveness of mitigation measures.

(B) **Constructed water course**: A mixing zone may be extended through a constructed water course and into a natural water course. For the purposes of this rule, a constructed water course is one that was constructed for irrigation, site drainage, or wastewater conveyance, and has the following characteristics:

(i) Irrigation flows, stormwater runoff, or wastewater flows have replaced natural streamflow regimes; and

(ii) The channel form is greatly simplified in lengthwise and cross sectional profiles; and

(iii) Physical and biological characteristics that differ significantly from nearby natural streams; and

(iv) A much lower diversity of aquatic species than found in nearby natural streams; and

(v) If the constructed water course is an irrigation canal, then it must have effective fish screens in place to qualify as a constructed water course.

(C) **Insignificant discharges**: Insignificant discharges are those that either by volume, pollutant characteristics, and/or temporary nature are expected to have little if any impact on beneficial uses in the receiving stream, and for which the extensive evaluations required for discharges to smaller streams are not warranted. For the purposes of this rule, only filter backwash discharges and underground storage tank cleanups are considered insignificant discharges.

(D) **Other requirements for alternate mixing zones**: The following are additional requirements for dischargers requesting an alternate mixing zone:

(i) Most discharges that qualify for an alternate mixing zone will extend through the receiving stream until a larger stream is reached, where thorough mixing of the effluent can occur and where the edge of the allowed mixing zone will be located. The portion of the mixing zone in the larger stream must meet all of the requirements of the standard mixing zone, including not blocking aquatic life passage; and

(ii) An alternate mixing zone shall not be granted if a municipal drinking water intake is located within the proposed mixing zone, and the discharge has a significant adverse impact on the drinking water source; and

(iii) The discharge will not pose an unreasonable hazard to the environment or pose a significant health risk, considering the likely pathways of exposure; and

(iv) The discharge shall not be acutely toxic to organisms passing through the mixing zone; and

(v) An alternate mixing zone shall not be granted if the substances discharged may accumulate in the sediments or bioaccumulate in aquatic life or wildlife to levels that adversely affect public health, safety, or welfare; aquatic life; wildlife; or other designated beneficial uses; and

(vi) In the event that the receiving stream is water quality limited, the requirements for discharges to water quality limited streams supersede this rule.

(5) Testing methods: The analytical testing methods for determining compliance with the water quality standards contained in this rule shall be in accordance with the most recent edition of **Standard Methods for the Examination of Water and Waste Water published jointly by the American Public Health Association, American Water Works Association, and Water Pollution Control Federation,** unless the Department has published an applicable superseding method, in which case testing shall be in accordance with the superseding method; provided, however, that testing in accordance with an alternative method shall comply with this rule if the Department has published the method or has approved the method in writing.

[**Publications:** The publication(s) referred to or incorporated by reference in this rule are available from the office of the Department of Environmental Quality.]

Stat. Auth.: ORS 468B.035 & 468.735 ORS 468B.048
Stat. Implemented: ORS 468B.048
Hist.: DEQ 128, f. & ef. 1-21-77; DEQ 1-1980, f. & ef. 1-9-80; DEQ 18-1987, f. & ef. 9-4-87; DEQ 14-1991, f. & cert. ef. 8-13-91; DEQ 17-1992, f. & cert. ef. 8-7-92 (and corrected 8-13-92)

Minimum Design Criteria for Treatment and Control of Wastes

340-41-655 Subject to the implementation program set forth in OAR 340-41-120, prior to discharge of any wastes from any new or modified facility to any waters of the Umatilla River Basin, such wastes shall be treated and controlled in facilities designed in accordance with the following minimum criteria. (In designing treatment facilities, average conditions and a normal range of variability are generally used in establishing design criteria. A facility once completed and placed in operation should operate at or near the design limit most of the time but may operate below the design criteria limit at times due to variables which are unpredictable or uncontrollable. This is particularly true for biological treatment facilities. The actual operating limits are intended to be established by permit pursuant to ORS 468.740 and recognize that the actual performance level may at times be less than the design criteria).

(1) Sewage wastes:

(a) During periods of low stream flows (approximately May 1 to October 31): Treatment resulting in monthly average effluent concentra-tions not to exceed 20 mg/l of BOD and 20 mg/l of SS or equivalent control;

(b) During the period of high stream flows (approximately November 1 to April 30): A minimum of secondary treatment or equivalent control and unless otherwise specifically authorized by the Department, operation of all waste treatment and control facilities at maximum practicable efficiency and effectiveness so as to minimize waste discharges to public waters;

(c) Effluent BOD concentrations in mg/l, divided by the dilution factor (ratio of receiving stream flow to effluent flow) shall not exceed one (1) unless otherwise approved by the EQC;

(d) Sewage wastes shall be disinfected, after treatment, equivalent to thorough mixing with

sufficient chlorine to provide a residual of at least 1 part per million after 60 minutes of contact time unless otherwise specifically authorized by permit;

(e) Positive protection shall be provided to prevent bypassing raw or inadequately treated sewage to public waters unless otherwise approved by the Department where elimination of inflow and infiltration would be necessary but not presently practicable;

(f) More stringent waste treatment and control requirements may be imposed where special conditions may require.

(2) Industrial wastes:

(a) After maximum practicable inplant control, a minimum of secondary treatment or equivalent control (reduction of suspended solids and organic material where present in significant quantities, effective disinfection where bacterial organisms of public health significance are present, and control of toxic or other deleterious substances);

(b) Specific industrial waste treatment requirements shall be determined on an individual basis in accordance with the provisions of this plan, applicable federal requirements, and the following:

(A) The uses which are or may likely be made of the receiving stream;

(B) The size and nature of flow of the receiving stream;

(C) The quantity and quality of wastes to be treated; and

(D) The presence or absence of other sources of pollution on the same watershed.

(c) Where industrial, commercial, or agricul-tural effluents contain significant quantities of potentially toxic elements, treatment requirements shall be determined utilizing appropriate bioassays;

(d) Industrial cooling waters containing significant heat loads shall be subjected to offstream cooling or heat recovery prior to discharge to public waters;

(e) Positive protection shall be provided to prevent bypassing of raw or inadequately treated industrial wastes to any public waters;

(f) Facilities shall be provided to prevent and contain spills of potentially toxic or hazardous materials and a positive program for containment and cleanup of such spills should they occur shall be developed and maintained.

Stat. Auth.: ORS Ch. 468
Hist.: DEQ 128, f. & ef. 1-21-77

Walla Walla Basin

Beneficial Water Uses to be Protected

340-41-682 Water quality in the Walla Walla River Basin (see **Figures 1** and **13**) shall be managed to protect the recognized beneficial uses as indicated in **Table 12**.

Stat. Auth.: ORS Ch. 468
Hist.: DEQ 128, f. & ef. 1-21-77; DEQ 9-1985, f. & ef. 8-6-85

Water Quality Standards Not to be Exceeded (To be Adopted Pursuant to ORS 468.735 and Enforceable Pursuant to ORS 468.720, 468.990, and 468.992)

340-41-685 (1) Notwithstanding the water quality standards contained below, the highest and best practicable treatment and/or control of wastes, activities, and flows shall in every case be provided so as to maintain dissolved oxygen and overall water quality at the highest possible

levels and water temperatures, coliform bacteria concentrations, dissolved chemical substances, toxic materials, radioactivity, turbidities, color, odor, and other deleterious factors at the lowest possible levels.

(2) No wastes shall be discharged and no activities shall be conducted which either alone or in combination with other wastes or activities will cause violation of the following standards in the waters of the Walla Walla River Basin:

(a) Dissolved oxygen (DO): The changes adopted by the Commission on January 11, 1996, become effective July 1, 1996. Until that time, the requirements of this rule that were in effect on January 10, 1996, apply:

(A) For waterbodies identified by the Department as providing salmonid spawning, during the periods from spawning until fry emergence from the gravels, the following criteria apply:

(i) The dissolved oxygen shall not be less than 11.0 mg/l. However, if the minimum intergravel dissolved oxygen, measured as a spatial median, is 8.0 mg/l or greater, then the DO criterion is 9.0 mg/l;

(ii) Where conditions of barometric pressure, altitude, and temperature preclude attainment of the 11.0 mg/l or 9.0 mg/l criteria, dissolved oxygen levels shall not be less than 95 percent of saturation.

(B) For waterbodies identified by the Department as providing salmonid spawning during the period from spawning until fry emergence from the gravels, the spatial median intergravel dissolved oxygen concentration shall not fall below 6.0 mg/l;

(C) A spatial median of 8.0 mg/l intergravel dissolved oxygen level shall be used to identify areas where the recognized beneficial use of salmonid spawning, egg incubation and fry emergence from the egg and from the gravels may be impaired and therefore require action by the Department. Upon determination that the spatial median intergravel dissolved oxygen concentration is below 8.0 mg/l, the Department may, in accordance with priorities established by the Department for evaluating water quality impaired waterbodies, determine whether to list the waterbody as water quality limited under the Section 303(d) of the Clean Water Act, initiate pollution control strategies as warranted, and where needed cooperate with appropriate designated management agencies to evaluate and implement necessary best management practices for nonpoint source pollution control;

(D) For waterbodies identified by the Department as providing cold-water aquatic life, the dissolved oxygen shall not be less than 8.0 mg/l as an absolute minimum. Where conditions of barometric pressure, altitude, and temperature preclude attainment of the 8.0 mg/l, dissolved oxygen shall not be less than 90 percent of saturation. At the discretion of the Department, when the Department determines that adequate information exists, the dissolved oxygen shall not fall below 8.0 mg/l as a 30-day mean minimum, 6.5 mg/l as a seven-day minimum mean, and shall not fall below 6.0 mg/l as an absolute minimum (**Table 21**);

(E) For waterbodies identified by the Department as providing cool-water aquatic life, the dissolved oxygen shall not be less than 6.5 mg/l as an absolute minimum. At the discretion of the Department, when the Department determines that adequate information exists, the dissolved oxygen shall not fall below 6.5 mg/l as a 30-day mean minimum, 5.0 mg/l as a seven-day minimum mean, and shall not fall below 4.0 mg/l as an absolute minimum (**Table 21**);

(F) For waterbodies identified by the Department as providing warm-water aquatic life, the dissolved oxygen shall not be less than 5.5 mg/l as an absolute minimum. At the discretion

of the Department, when the Department determines that adequate information exists, the dissolved oxygen shall not fall below 5.5 mg/l as a 30-day mean minimum, and shall not fall below 4.0 mg/l as an absolute minimum (**Table 21**);

(b) Turbidity (Nephelometric Turbidity Units, NTU): No more than a ten percent cumulative increase in natural stream turbidities shall be allowed, as measured relative to a control point immediately upstream of the turbidity causing activity. However, limited duration activities necessary to address an emergency or to accommodate essential dredging, construction or other legitimate activities and which cause the standard to be exceeded may be authorized provided all practicable turbidity control techniques have been applied and one of the following has been granted:

(A) Emergency activities: Approval coordinated by DEQ with the Department of Fish and Wildlife under conditions they may prescribe to accommodate response to emergencies or to protect public health and welfare;

(B) Dredging, Construction or other Legitimate Activities: Permit or certification authorized under terms of Section 401 or 404 (Permits and Licenses, Federal Water Pollution Control Act) or OAR 141-85-100 et. seq. (Removal and Fill Permits, Division of State Lands), with limitations and conditions governing the activity set forth in the permit or certificate.

(c) pH (hydrogen ion concentration): pH values shall not fall outside the range of 6.5 to 9.0. When greater than 25 percent of ambient measurements taken between June and September are greater than pH 8.7, and as resources are available according to priorities set by the Department, the Department shall determine whether the values higher than 8.7 are anthropogenic or natural in origin. The following exception applies: Waters impounded by dams existing on January 1, 1996, which have pHs that exceed the criteria shall not be considered in violation of the standard if the Department determines that the exceedance would not occur without the impoundment and that all practicable measures have been taken to bring the pH in the impounded waters into compliance with the criteria;

(d) Bacteria standards:

(A) Numeric Criteria: Organisms of the coliform group commonly associated with fecal sources (MPN or equivalent membrane filtration using a representative number of samples) shall not exceed the criteria described in subparagraphs (i) and (ii) of this paragraph. Freshwaters:

(i) A 30-day log mean of 126 *E. coli* organisms per 100 ml, based on a minimum of five (5) samples;

(ii) No single sample shall exceed 406 *E. coli* organisms per 100 ml;

(B) Raw Sewage Prohibition: No sewage shall be discharged into or in any other manner be allowed to enter the waters of the State unless such sewage has been treated in a manner approved by the Department or otherwise allowed by these rules;

(C) Animal Waste: Runoff contaminated with domesticated animal wastes shall be minimized and treated to the maximum extent practicable before it is allowed to enter waters of the State;

(D) Effluent Limitations and Water Quality Limited Waterbodies: Effluent limitations to implement the criteria in this rule are found in OAR 340-41-120(12) through (16). Implementation of the criteria in this rule in water quality limited waterbodies is described in OAR 340-41-026(3)(a)(I) and OAR 340-41-120(17).

(e) Bacterial pollution or other conditions deleterious to waters used for domestic purposes, livestock watering, irrigation, bathing, or shellfish propagation, or otherwise injurious to public health shall not be allowed;

(f) The liberation of dissolved gases, such as carbon dioxide, hydrogen sulfide, or other gases in sufficient quantities to cause objectionable odors or to be deleterious to fish or other aquatic life, navigation, recreation, or other reasonable uses made of such waters shall not be allowed;

(g) The development of fungi or other growths having a deleterious effect on stream bottoms, fish or other aquatic life, or which are injurious to health, recreation, or industry shall not be allowed;

(h) The creation of tastes or odors or toxic or other conditions that are deleterious to fish or other aquatic life or affect the potability of drinking water or the palatability of fish or shellfish shall not be allowed;

(i) The formation of appreciable bottom or sludge deposits or the formation of any organic or inorganic deposits deleterious to fish or other aquatic life or injurious to public health, recreation, or industry shall not be allowed;

(j) Objectionable discoloration, scum, oily sleek or floating solids, or coating of aquatic life with oil films shall not be allowed;

(k) Aesthetic conditions offensive to the human senses of sight, taste, smell, or touch shall not be allowed;

(l) Radioisotope concentrations shall not exceed maximum permissible concentrations (MPC's) in drinking water, edible fishes or shellfishes, wildlife, irrigated crops, livestock and dairy products, or pose an external radiation hazard;

(m) The concentration of total dissolved gas relative to atmospheric pressure at the point of sample collection shall not exceed 110 percent of saturation, except when stream flow exceeds the ten-year, seven-day average flood. However, for Hatchery receiving waters and waters of less than two feet in depth, the concentration of total dissolved gas relative to atmospheric pressure at the point of sample collection shall not exceed 105 percent of saturation;

(n) Total Dissolved Solids: Guide concentrations listed below shall not be exceeded unless otherwise specifically authorized by DEQ upon such conditions as it may deem necessary to carry out the general intent of this plan and to protect the beneficial uses set forth in OAR 340-41-682: 200.0 mg/l;

(o) Temperature: The changes adopted by the Commission on January 11, 1996, become effective July 1, 1996. Until that time, the requirements of this rule that were in effect on January 10, 1996, apply. The method for measuring the numeric temperature criteria specified in this rule is defined in OAR 340-41-006(54):

(A) To accomplish the goals identified in OAR 340-41-120(11), unless specifically allowed under a Department-approved surface water temperature management plan as required under OAR 340-41-026(3)(a)(D), no measurable surface water temperature increase resulting from anthropogenic activities is allowed:

(i) In a basin for which salmonid fish rearing is a designated beneficial use, and in which surface water temperatures exceed 64.0°F (17.8°C);

(ii) In waters and periods of the year determined by the Department to support native salmonid spawning, egg incubation, and fry emergence from the egg and from the gravels in a basin which exceeds 55.0°F (12.8°C);

(iii) In waters determined by the Department to support or to be necessary to maintain the viability of native Oregon bull trout, when surface water temperatures exceed 50.0°F (10.0°C);

(iv) In waters determined by the Department to be ecologically significant cold-water refugia;

(v) In stream segments containing federally listed Threatened and Endangered species if the increase would impair the biological integrity of the Threatened and Endangered population;

(vi) In Oregon waters when the dissolved oxygen (DO) levels are within 0.5 mg/l or 10 percent saturation of the water column or intergravel DO criterion for a given stream reach or subbasin;

(vii) In natural lakes.

(B) An exceedance of the numeric criteria identified in subparagraphs (A)(i) through (iii) of this subsection will not be deemed a temperature standard violation if it occurs when the air temperature during the warmest seven-day period of the year exceeds the 90th percentile of the seven-day average daily maximum air temperature calculated in a yearly series over the historic record. However, during such periods, the anthropogenic sources must still continue to comply with their surface water temperature management plans developed under OAR 340-41-026(3)(a)(D);

(C) Any source may petition the Commission for an exception to subparagraphs (A)(i) through (vii) of this subsection for discharge above the identified criteria if:

(i) The source provides the necessary scientific information to describe how the designated beneficial uses would not be adversely impacted; or

(ii) A source is implementing all reasonable management practices or measures; its activity will not significantly affect the beneficial uses; and the environmental cost of treating the parameter to the level necessary to assure full protection would outweigh the risk to the resource.

(p) Toxic Substances:

(A) Toxic substances shall not be introduced above natural background levels in the waters of the state in amounts, concentrations, or combinations which may be harmful, may chemically change to harmful forms in the environment, or may accumulate in sediments or bioaccumulate in aquatic life or wildlife to levels that adversely affect public health, safety, or welfare; aquatic life; wildlife; or other designated beneficial uses;

(B) Levels of toxic substances shall not exceed the criteria listed in **Table 20** which were based on criteria established by EPA and published in **Quality Criteria for Water (1986)**, unless otherwise noted;

(C) The criteria in paragraph (B) of this subsection shall apply unless data from scientifically valid studies demonstrate that the most sensitive designated beneficial uses will not be adversely affected by exceeding a criterion or that a more restrictive criterion is warranted to protect beneficial uses, as accepted by the Department on a site specific basis. Where no published EPA criteria exist for a toxic substance, public health advisories and other published scientific literature may be considered and used, if appropriate, to set guidance values;

(D) Bio-assessment studies such as laboratory bioassays or instream measurements of indigenous biological communities, shall be conducted, as the Department deems necessary, to monitor the toxicity of complex effluents, other suspected discharges or chemical substances without numeric criteria, to aquatic life. These studies, properly conducted in accordance with standard testing procedures, may be considered as scientifically valid data for the purposes of paragraph (C) of this subsection. If toxicity occurs, the Department shall evaluate and implement measures necessary to reduce toxicity on a case-by-case basis.

(3) Where the naturally occurring quality parameters of waters of the Walla Walla River Basin are outside the numerical limits of the above assigned water quality standards, the naturally occurring water quality shall be the standard. However, in such cases special restrictions, described in OAR 340-41-026(3)(a)(C)(iii), apply to discharges that affect dissolved oxygen.

(4) Mixing zones:

(a) The Department may allow a designated portion of a receiving water to serve as a zone of dilution for wastewaters and receiving waters to mix thoroughly and this zone will be defined as a mixing zone;

(b) The Department may suspend all or part of the water quality standards, or set less restrictive standards, in the defined mixing zone, provided that the following conditions are met:

(A) The water within the mixing zone shall be free of:

(i) Materials in concentrations that will cause acute toxicity to aquatic life as measured by a Department approved bioassay method. Acute toxicity is lethality to aquatic life as measured by a significant difference in lethal concentration between the control and 100 percent effluent in an acute bioassay test. Lethality in 100 percent effluent may be allowed due to ammonia and chlorine only when it is demonstrated on a case-by-case basis that immediate dilution of the effluent within the mixing zone reduces toxicity below lethal concentrations. The Department may on a case-by-case basis establish a zone of immediate dilution if appropriate for other parameters;

(ii) Materials that will settle to form objectionable deposits;

(iii) Floating debris, oil, scum, or other materials that cause nuisance conditions;

(iv) Substances in concentrations that produce deleterious amounts of fungal or bacterial growths.

(B) The water outside the boundary of the mixing zone shall:

(i) Be free of materials in concentrations that will cause chronic (sublethal) toxicity. Chronic toxicity is measured as the concentration that causes long-term sublethal effects, such as significantly impaired growth or reproduction in aquatic organisms, during a testing period based on test species life cycle. Procedures and end points will be specified by the Department in wastewater discharge permits;

(ii) Meet all other water quality standards under normal annual low flow conditions.

(c) The limits of the mixing zone shall be described in the wastewater discharge permit. In determining the location, surface area, and volume of a mixing zone area, the Department may use appropriate mixing zone guidelines to assess the biological, physical, and chemical character of receiving waters, and effluent, and the most appropriate placement of the outfall, to protect instream water quality, public health, and other beneficial uses. Based on receiving water and effluent characteristics, the Department shall define a mixing zone in the immediate area of a wastewater discharge to:

(A) Be as small as feasible;

(B) Avoid overlap with any other mixing zones to the extent possible and be less than the total stream width as necessary to allow passage of fish and other aquatic organisms;

(C) Minimize adverse effects on the indigenous biological community especially when species are present that warrant special protection for their economic importance, tribal significance, ecological uniqueness, or for other similar reasons as determined by the Department and does not block the free passage of aquatic life;

(D) Not threaten public health;

(E) Minimize adverse effects on other designated beneficial uses outside the mixing zone.

(d) The Department may request the applicant of a permitted discharge for which a mixing zone is required, to submit all information necessary to define a mixing zone, such as:

(A) Type of operation to be conducted;

(B) Characteristics of effluent flow rates and composition;

(C) Characteristics of low flows of receiving waters;

(D) Description of potential environmental effects;

(E) Proposed design for outfall structures.

(e) The Department may, as necessary, require mixing zone monitoring studies and/or bioassays to be conducted to evaluate water quality or biological status within and outside the mixing zone boundary;

(f) The Department may change mixing zone limits or require there location of an outfall if it determines that the water quality within the mixing zone adversely affects any existing beneficial uses in the receiving waters.

(g) **Alternate requirements for mixing zones**: For some existing or proposed discharges to some receiving streams, it may not be practicable to treat wastewater to meet instream water quality standards at the point of discharge or within a short distance from the point of discharge. Some of these discharges could be allowed without impairing the overall ecological integrity of the receiving streams, or may provide an overall benefit to the receiving stream. This section specifies the conditions and circumstances under which a mixing zone may be allowed by the Department that extends beyond the immediate area around a discharge point, or that extends across a stream width. An alternate mixing zone may be approved if the applicant demonstrates to the Department's satisfaction that the discharge (A) creates an overall environmental benefit, or (B) is to a constructed water course, or (C) is insignificant. The three circumstances under which alternate mixing zones may be established are described further below.

(A) **Overall environmental benefit**.

(i) Qualifying for alternate mixing zone based on overall environmental benefit: In order to qualify for an alternate mixing zone based on a finding of overall environmental benefit, the discharger must demonstrate to the Department's satisfaction the following:

(a) That all practical strategies have been or will be implemented to minimize the pollutant loads in the effluent; and

(b) For proposed increased discharges, the current actual discharge and mixing zone does not meet the requirements of a standard mixing zone; and

(c) Either that, on balance, an environmental benefit would be lost if the discharge did not occur, or that the discharger is prepared to undertake other actions that will mitigate the effect of the discharge to an extent resulting in a net environmental benefit to the receiving stream.

(d) For the purposes of this rule, the term "practical" shall include environmental impact, availability of alternatives, cost of alternatives, and other relevant factors.

(ii) Studies required and evaluation of studies: In order to demonstrate that, on balance, an environmental benefit will result from the discharge, the following information shall be provided by the applicant:

(a) The effluent flow and pollutant loads that are detected or expected in the effluent, by month, both average and expected worst case discharges. The parameters to be evaluated include at a minimum temperature, biochemical oxygen demand, total suspended solids, total dissolved solids, pH, settleable solids, e. coli bacteria, oil and grease, any pollutants listed in Table 20 of this rule division, and any pollutant for which the receiving stream has been designated by the

Department as water quality limited; and

(b) Receiving stream flow, by month; and

(c) The expected impact of the discharge, by month, on the receiving stream for the entire proposed mixing zone area for all of the pollutants listed above. Included in this analysis shall be a comparison of the receiving stream water quality with the discharge and without the discharge; and

(d) A description of fish, other vertebrate populations, and macroinvertebrates that reside in or are likely to pass through the proposed mixing zone, including expected location (if known), species identification, stage of development, and time of year when their presence is expected. For existing discharges, the applicant shall provide the same information for similar nearby streams that are unaffected by wastewater discharges. In addition, any threatened or endangered species in the immediate vicinity of the receiving stream shall be identified; and

(e) The expected impact of the discharge on aquatic organisms and/or fish passage, including any expected negative impacts from the effluent attracting fish where that is not desirable; and

(f) A description of the expected environmental benefits to be derived from the discharge or other mitigation measures proposed by the applicant, including but not limited to improvements in water quality, improvements in fish passage, and improvements in aquatic habitat. If the applicant proposes to undertake mitigation measures designed to provide environmental benefits (e.g., purchasing water or water conservation rights to increase stream flows or establishing stream cover to decrease temperature), the applicant shall describe the mitigation measures in detail, including a description of the steps it will take to ensure that the benefits of the mitigation measures are attained and are not lost or diminished over time.

(g) Some or all of the above study requirements may be waived by the Department, if the Department determines that the information is not needed. In the event that the Department does waive some or all of the above study requirements, the basis for waiving the requirements will be included in the permit evaluation report upon the next permit renewal or modification relating to the mixing zone.

(h) Upon request of the Department, the applicant shall conduct additional studies to further evaluate the impact of the discharge, which may include whole effluent toxicity testing, stream surveys for water quality, stream surveys for fish and other aquatic organisms, or other studies as specified by the Department.

(i) In evaluating whether an existing or proposed increase in an existing discharge would result in a net environmental benefit, the applicant shall use the native biological community in a nearby, similar stream that is unaffected by wastewater discharges. The Department shall consider all information generated as required in this rule and other relevant information. The evaluation shall consider benefits to the native aquatic biological community only.

(iii) Permit conditions: Upon determination by the Department that the discharge and mitigation measures (if any) will likely result in an overall environmental benefit, the Department shall include appropriate permit conditions to insure that the environmental benefits are attained and continue. Such permit conditions may include but not be limited to:

(a) Maximum allowed effluent flows and pollutant loads;

(b) Requirements to maintain land ownership, easements, contracts, or other legally binding measures necessary to assure that mitigation measures, if any, remain in place and effective;

(c) Special operating conditions;

(d) Monitoring and reporting requirements; and

(e) Studies to evaluate the effectiveness of mitigation measures.

(B) **Constructed water course**: A mixing zone may be extended through a constructed water course and into a natural water course. For the purposes of this rule, a constructed water course is one that was constructed for irrigation, site drainage, or wastewater conveyance, and has the following characteristics:

(i) Irrigation flows, stormwater runoff, or wastewater flows have replaced natural streamflow regimes; and

(ii) The channel form is greatly simplified in lengthwise and cross sectional profiles; and

(iii) Physical and biological characteristics that differ significantly from nearby natural streams; and

(iv) A much lower diversity of aquatic species than found in nearby natural streams; and

(v) If the constructed water course is an irrigation canal, then it must have effective fish screens in place to qualify as a constructed water course.

(C) **Insignificant discharges**: Insignificant discharges are those that either by volume, pollutant characteristics, and/or temporary nature are expected to have little if any impact on beneficial uses in the receiving stream, and for which the extensive evaluations required for discharges to smaller streams are not warranted. For the purposes of this rule, only filter backwash discharges and underground storage tank cleanups are considered insignificant discharges.

(D) **Other requirements for alternate mixing zones**: The following are additional requirements for dischargers requesting an alternate mixing zone:

(i) Most discharges that qualify for an alternate mixing zone will extend through the receiving stream until a larger stream is reached, where thorough mixing of the effluent can occur and where the edge of the allowed mixing zone will be located. The portion of the mixing zone in the larger stream must meet all of the requirements of the standard mixing zone, including not blocking aquatic life passage; and

(ii) An alternate mixing zone shall not be granted if a municipal drinking water intake is located within the proposed mixing zone, and the discharge has a significant adverse impact on the drinking water source; and

(iii) The discharge will not pose an unreasonable hazard to the environment or pose a significant health risk, considering the likely pathways of exposure; and

(iv) The discharge shall not be acutely toxic to organisms passing through the mixing zone; and

(v) An alternate mixing zone shall not be granted if the substances discharged may accumulate in the sediments or bioaccumulate in aquatic life or wildlife to levels that adversely affect public health, safety, or welfare; aquatic life; wildlife; or other designated beneficial uses; and

(vi) In the event that the receiving stream is water quality limited, the requirements for discharges to water quality limited streams supersede this rule.

(5) Testing methods: The analytical testing methods for determining compliance with the water quality standards contained in this rule shall be in accordance with the most recent edition of **Standard Methods for the Examination of Water and Waste Water published jointly by the American Public Health Association, American Water Works Association, and Water Pollution Control Federation,** unless the Department has published an applicable superseding method, in which case testing shall be in accordance with the superseding method;

provided, however, that testing in accordance with an alternative method shall comply with this rule if the Department has published the method or has approved the method in writing.

[**Publications**: The publication(s) referred to or incorporated by reference in this rule are available from the office of the Department of Environmental Quality.]

Stat. Auth.: ORS 468B.035 & 468.735; ORS 468B.048
Stat. Implemented: ORS 468B.048
Hist.: DEQ 128, f. & ef. 1-21-77; DEQ 1-1980, f. & ef. 1-9-80; DEQ 18-1987, f. & ef. 9-4-87; DEQ 14-1991, f. & cert. ef. 8-13-91; DEQ 17-1992, f. & cert. ef. 8-7-92 (and corrected 8-13-92)

Minimum Design Criteria for Treatment and Control of Wastes

340-41-695 Subject to the implementation program set forth in OAR 340-41-120, prior to discharge of any wastes from any new or modified facility to any waters of the Walla Walla River Basin, such wastes shall be treated and controlled in facilities designed in accordance with the following minimum criteria. (In designing treatment facilities, average conditions and a normal range of variability are generally used in establishing design criteria. A facility once completed and placed in operation should operate at or near the design limit most of the time but may operate below the design criteria limit at times due to variables which are unpredictable or uncontrollable. This is particularly true for biological treatment facilities. The actual operating limits are intended to be established by permit pursuant to ORS 468.740 and recognize that the actual performance level may at times be less than the design criteria).

(1) Sewage wastes:

(a) During periods of low stream flows (approximately April 1 to October 31): Treatment resulting in monthly average effluent concentra-tions not to exceed 20 mg/l of BOD and 20 mg/l of suspended solids or equivalent control;

(b) During the period of high stream flows (approximately November 1 to March 31): A minimum of secondary treatment or equivalent control and unless otherwise specifically authorized by the Department, operation of all waste treatment and control facilities at maximum practicable efficiency and effectiveness so as to minimize waste discharges to public waters;

(c) Effluent BOD concentrations in mg/l, divided by the dilution factor (ratio of receiving stream flow to effluent flow) shall not exceed one unless otherwise approved by the EQC;

(d) Sewage wastes shall be disinfected, after treatment, equivalent to thorough mixing with sufficient chlorine to provide a residual of at least 1 part per million after 60 minutes of contact time unless otherwise specifically authorized by permit;

(e) Positive protection shall be provided to prevent bypassing raw or inadequately treated sewage to public waters unless otherwise approved by the Department where elimination of inflow and infiltration would be necessary but not presently practicable;

(f) More stringent waste treatment and control requirements may be imposed where special conditions may require.

(2) Industrial wastes:

(a) After maximum practicable inplant control, a minimum of secondary treatment or equivalent control (reduction of suspended solids and organic material where present in significant quantities, effective disinfection where bacterial organisms of public health significance are present, and control of toxic or other deleterious substances);

(b) Specific industrial waste treatment requirements shall be determined on an individual

basis in accordance with the provisions of this plan, applicable federal requirements, and the following:

(A) The uses which are or may likely be made of the receiving stream;

(B) The size and nature of flow of the receiving stream;

(C) The quantity and quality of wastes to be treated; and

(D) The presence or absence of other sources of pollution on the same watershed.

(c) Where industrial, commercial, or agricul-tural effluents contain significant quantities of potentially toxic elements, treatment requirements shall be determined utilizing appropriate bioassays;

(d) Industrial cooling waters containing significant heat loads shall be subjected to offstream cooling or heat recovery prior to discharge to public waters;

(e) Positive protection shall be provided to prevent bypassing of raw or inadequately treated industrial wastes to any public waters;

(f) Facilities shall be provided to prevent and contain spills of potentially toxic or hazardous materials and a positive program for containment and cleanup of such spills should they occur shall be developed and maintained.

Stat. Auth.: ORS Ch. 468
Hist.: DEQ 128, f. & ef. 1-21-77

Grande Ronde Basin

Beneficial Water Uses to be Protected

340-41-722 Water quality in the Grande Ronde River Basin (see **Figures 1** and **14**) shall be managed to protect the recognized beneficial uses as indicated in **Table 13**.

Stat. Auth.: ORS Ch. 468
Hist.: DEQ 128, f. & ef. 1-21-77

Water Quality Standards Not to be Exceeded (To be Adopted Pursuant to ORS 468.735 and Enforceable Pursuant to ORS 468.720, 468.990, and 468.992)

340-41-725 (1) Notwithstanding the water quality standards contained below, the highest and best practicable treatment and/or control of wastes, activities, and flows shall in every case be provided so as to maintain dissolved oxygen and overall water quality at the highest possible levels and water temperatures, coliform bacteria concentrations, dissolved chemical substances, toxic materials, radioactivity, turbidities, color, odor, and other deleterious factors at the lowest possible levels.

(2) No wastes shall be discharged and no activities shall be conducted which either alone or in combination with other wastes or activities will cause violation of the following standards in the waters of the Grande Ronde River Basin:

(a) Dissolved oxygen (DO): The changes adopted by the Commission on January 11, 1996, become effective July 1, 1996. Until that time, the requirements of this rule that were in effect on January 10, 1996, apply:

(A) For waterbodies identified by the Department as providing salmonid spawning, during the periods from spawning until fry emergence from the gravels, the following criteria apply:

(i) The dissolved oxygen shall not be less than 11.0 mg/l. However, if the minimum intergravel dissolved oxygen, measured as a spatial median, is 8.0 mg/l or greater, then the DO criterion is 9.0 mg/l;

(ii) Where conditions of barometric pressure, altitude, and temperature preclude attainment of the 11.0 mg/l or 9.0 mg/l criteria, dissolved oxygen levels shall not be less than 95 percent of saturation.

(B) For waterbodies identified by the Department as providing salmonid spawning during the period from spawning until fry emergence from the gravels, the spatial median intergravel dissolved oxygen concentration shall not fall below 6.0 mg/l;

(C) A spatial median of 8.0 mg/l intergravel dissolved oxygen level shall be used to identify areas where the recognized beneficial use of salmonid spawning, egg incubation and fry emergence from the egg and from the gravels may be impaired and therefore require action by the Department. Upon determination that the spatial median intergravel dissolved oxygen concentration is below 8.0 mg/l, the Department may, in accordance with priorities established by the Department for evaluating water quality impaired waterbodies, determine whether to list the waterbody as water quality limited under the Section 303(d) of the Clean Water Act, initiate pollution control strategies as warranted, and where needed cooperate with appropriate designated management agencies to evaluate and implement necessary best management practices for nonpoint source pollution control;

(D) For waterbodies identified by the Department as providing cold-water aquatic life, the dissolved oxygen shall not be less than 8.0 mg/l as an absolute minimum. Where conditions of barometric pressure, altitude, and temperature preclude attainment of the 8.0 mg/l, dissolved oxygen shall not be less than 90 percent of saturation. At the discretion of the Department, when the Department determines that adequate information exists, the dissolved oxygen shall not fall below 8.0 mg/l as a 30-day mean minimum, 6.5 mg/l as a seven-day minimum mean, and shall not fall below 6.0 mg/l as an absolute minimum (**Table 21**);

(E) For waterbodies identified by the Department as providing cool-water aquatic life, the dissolved oxygen shall not be less than 6.5 mg/l as an absolute minimum. At the discretion of the Department, when the Department determines that adequate information exists, the dissolved oxygen shall not fall below 6.5 mg/l as a 30-day mean minimum, 5.0 mg/l as a seven-day minimum mean, and shall not fall below 4.0 mg/l as an absolute minimum (**Table 21**);

(F) For waterbodies identified by the Department as providing warm-water aquatic life, the dissolved oxygen shall not be less than 5.5 mg/l as an absolute minimum. At the discretion of the Department, when the Department determines that adequate information exists, the dissolved oxygen shall not fall below 5.5 mg/l as a 30-day mean minimum, and shall not fall below 4.0 mg/l as an absolute minimum (**Table 21**);

(b) Temperature: The changes adopted by the Commission on January 11, 1996, become effective July 1, 1996. Until that time, the requirements of this rule that were in effect on January 10, 1996, apply. The method for measuring the numeric temperature criteria specified in this rule is defined in OAR 340-41-006(54):

(A) To accomplish the goals identified in OAR 340-41-120(11), unless specifically allowed under a Department-approved surface water temperature management plan as required under OAR 340-41-026(3)(a)(D), no measurable surface water temperature increase resulting from anthropogenic activities is allowed:

(i) In a basin for which salmonid fish rearing is a designated beneficial use, and in which surface water temperatures exceed 64.0°F (17.8°C);

(ii) In waters and periods of the year determined by the Department to support native salmonid spawning, egg incubation, and fry emergence from the egg and from the gravels in a basin which exceeds 55.0°F (12.8°C);

(iii) In waters determined by the Department to support or to be necessary to maintain the viability of native Oregon bull trout, when surface water temperatures exceed 50.0°F (10.0°C);

(iv) In waters determined by the Department to be ecologically significant cold-water refugia;

(v) In stream segments containing federally listed Threatened and Endangered species if the increase would impair the biological integrity of the Threatened and Endangered population;

(vi) In Oregon waters when the dissolved oxygen (DO) levels are within 0.5 mg/l or 10 percent saturation of the water column or intergravel DO criterion for a given stream reach or subbasin;

(vii) In natural lakes.

(B) An exceedance of the numeric criteria identified in subparagraphs (A)(i) through (iii) of this subsection will not be deemed a temperature standard violation if it occurs when the air temperature during the warmest seven-day period of the year exceeds the 90th percentile of the seven-day average daily maximum air temperature calculated in a yearly series over the historic record. However, during such periods, the anthropogenic sources must still continue to comply with their surface water temperature management plans developed under OAR 340-41-026(3)(a)(D);

(C) Any source may petition the Commission for an exception to subparagraphs (A)(i) through (vii) of this subsection for discharge above the identified criteria if:

(i) The source provides the necessary scientific information to describe how the designated beneficial uses would not be adversely impacted; or

(ii) A source is implementing all reasonable management practices or measures; its activity will not significantly affect the beneficial uses; and the environmental cost of treating the parameter to the level necessary to assure full protection would outweigh the risk to the resource.

(c) Turbidity (Nephelometric Turbidity Units, NTU): No more than a ten percent cumulative increase in natural stream turbidities shall be allowed, as measured relative to a control point immediately upstream of the turbidity causing activity. However, limited duration activities necessary to address an emergency or to accommodate essential dredging, construction or other legitimate activities and which cause the standard to be exceeded may be authorized provided all practicable turbidity control techniques have been applied and one of the following has been granted:

(A) Emergency activities: Approval coordinated by DEQ with the Department of Fish and Wildlife under conditions they may prescribe to accommodate response to emergencies or to protect public health and welfare;

(B) Dredging, Construction or other Legitimate Activities: Permit or certification authorized under terms of Section 401 or 404 (Permits and Licenses, Federal Water Pollution Control Act) or OAR 141-85-100 et seq. (Removal and Fill Permits, Division of State Lands), with limitations and conditions governing the activity set forth in the permit or certificate.

(d) pH (hydrogen ion concentration): pH values shall not fall outside the ranges identified in paragraphs (A) and (B) of this subsection. The following exception applies: Waters impounded by dams existing on January 1, 1996, which have pHs that exceed the criteria shall not be considered in violation of the standard if the Department determines that the exceedance

would not occur without the impoundment and that all practicable measures have been taken to bring the pH in the impounded waters into compliance with the criteria:

(A) Mainstem Snake River (river miles 176 to 260): 7.0 - 9.0;

(B) All other Basin streams: 6.5 - 9.0. When greater than 25 percent of ambient measurements taken between June and September are greater than pH 8.7, and as resources are available according to priorities set by the Department, the Department shall determine whether the values higher than 8.7 are anthropogenic or natural in origin.

(e) Bacteria standards:

(A) Numeric Criteria: Organisms of the coliform group commonly associated with fecal sources (MPN or equivalent membrane filtration using a representative number of samples) shall not exceed the criteria described in subparagraphs (i) and (ii) of this paragraph. Freshwaters:

(i) A 30-day log mean of 126 *E. coli* organisms per 100 ml, based on a minimum of five (5) samples;

(ii) No single sample shall exceed 406 *E. coli* organisms per 100 ml;

(B) Raw Sewage Prohibition: No sewage shall be discharged into or in any other manner be allowed to enter the waters of the State unless such sewage has been treated in a manner approved by the Department or otherwise allowed by these rules;

(C) Animal Waste: Runoff contaminated with domesticated animal wastes shall be minimized and treated to the maximum extent practicable before it is allowed to enter waters of the State;

(D) Effluent Limitations and Water Quality Limited Waterbodies: Effluent limitations to implement the criteria in this rule are found in OAR 340-41-120(12) through (16). Implementation of the criteria in this rule in water quality limited waterbodies is described in OAR 340-41-026(3)(a)(I) and OAR 340-41-120(17).

(f) Bacterial pollution or other conditions deleterious to waters used for domestic purposes, livestock watering, irrigation, bathing, or otherwise injurious to public health shall not be allowed;

(g) The liberation of dissolved gases, such as carbon dioxide, hydrogen sulfide, or other gases, in sufficient quantities to cause objectionable odors or to be deleterious to fish or other aquatic life, navigation, recreation, or other reasonable uses made of such waters shall not be allowed;

(h) The development of fungi or other growths having a deleterious effect on stream bottoms, fish or other aquatic life, or which are injurious to health, recreation, or industry shall not be allowed;

(i) The creation of tastes or odors or toxic or other conditions that are deleterious to fish or other aquatic life or affect the potability of drinking water or the palatability of fish or shellfish shall not be allowed;

(j) The formation of appreciable bottom or sludge deposits or the formation of any organic or inorganic deposits deleterious to fish or other aquatic life or injurious to public health, recreation, or industry shall not be allowed;

(k) Objectionable discoloration, scum, oily sleek or floating solids, or coating of aquatic life with oil films shall not be allowed;

(l) Aesthetic conditions offensive to the human senses of sight, taste, smell, or touch shall not be allowed;

(m) Radioisotope concentrations shall not exceed maximum permissible concentrations (MPC's) in drinking water, edible fishes or shellfishes, wildlife, irrigated crops, livestock and dairy products, or pose an external radiation hazard;

(n) The concentration of total dissolved gas relative to atmospheric pressure at the point of sample collection shall not exceed 110 percent of saturation, except when stream flow exceeds the ten-year, seven-day average flood. However, for Hatchery receiving waters and waters of less than two feet in depth, the concentration of total dissolved gas relative to atmospheric pressure at the point of sample collection shall not exceed 105 percent of saturation;

(o) Total Dissolved Solids: Guide concentrations listed below shall not be exceeded unless otherwise specifically authorized by DEQ upon such conditions as it may deem necessary to carry out the general intent of this plan and to protect the beneficial uses set forth in OAR 340-41-722:

(A) Mainstem Grande Ronde River — 200.0 mg/l;

(B) Mainstem Snake River — 750.0 mg/l.

(p) Toxic Substances:

(A) Toxic substances shall not be introduced above natural background levels in the waters of the state in amounts, concentrations, or combinations which may be harmful, may chemically change to harmful forms in the environment, or may accumulate in sediments or bioaccumulate in aquatic life or wildlife to levels that adversely affect public health, safety, or welfare; aquatic life; wildlife; or other designated beneficial uses;

(B) Levels of toxic substances shall not exceed the criteria listed in **Table 20** which were based on criteria established by EPA and published in **Quality Criteria for Water (1986)**, unless otherwise noted;

(C) The criteria in paragraph (B) of this subsection shall apply unless data from scientifically valid studies demonstrate that the most sensitive designated beneficial uses will not be adversely affected by exceeding a criterion or that a more restrictive criterion is warranted to protect beneficial uses, as accepted by the Department on a site specific basis. Where no published EPA criteria exist for a toxic substance, public health advisories and other published scientific literature may be considered and used, if appropriate, to set guidance values;

(D) Bio-assessment studies such as laboratory bioassays or instream measurements of indigenous biological communities, shall be conducted, as the Department deems necessary, to monitor the toxicity of complex effluents, other suspected discharges or chemical substances without numeric criteria, to aquatic life. These studies, properly conducted in accordance with standard testing procedures, may be considered as scientifically valid data for the purposes of paragraph (C) of this subsection. If toxicity occurs, the Department shall evaluate and implement measures necessary to reduce toxicity on a case-by-case basis.

(3) Where the naturally occurring quality parameters of waters of the Grande Ronde River Basin are outside the numerical limits of the above assigned water quality standards, the naturally occurring water quality shall be the standard. However, in such cases special restrictions, described in OAR 340-41-026(3)(a)(C)(iii), apply to discharges that affect dissolved oxygen.

(4) Mixing zones:

(a) The Department may allow a designated portion of a receiving water to serve as a zone of dilution for wastewaters and receiving waters to mix thoroughly and this zone will be defined as a mixing zone;

(b) The Department may suspend all or part of the water quality standards, or set less restrictive standards, in the defined mixing zone, provided that the following conditions are met:

(A) The water within the mixing zone shall be free of:

(i) Materials in concentrations that will cause acute toxicity to aquatic life as measured by a Department approved bioassay method. Acute toxicity is lethality to aquatic life as measured by a significant difference in lethal concentration between the control and 100 percent effluent in an acute bioassay test. Lethality in 100 percent effluent may be allowed due to ammonia and chlorine only when it is demonstrated on a case-by-case basis that immediate dilution of the effluent within the mixing zone reduces toxicity below lethal concentrations. The Department may on a case-by-case basis establish a zone of immediate dilution if appropriate for other parameters;

(ii) Materials that will settle to form objectionable deposits;

(iii) Floating debris, oil, scum, or other materials that cause nuisance conditions;

(iv) Substances in concentrations that produce deleterious amounts of fungal or bacterial growths.

(B) The water outside the boundary of the mixing zone shall:

(i) Be free of materials in concentrations that will cause chronic (sublethal) toxicity. Chronic toxicity is measured as the concentration that causes long-term sublethal effects, such as significantly impaired growth or reproduction in aquatic organisms, during a testing period based on test species life cycle. Procedures and end points will be specified by the Department in wastewater discharge permits;

(ii) Meet all other water quality standards under normal annual low flow conditions.

(c) The limits of the mixing zone shall be described in the wastewater discharge permit. In determining the location, surface area, and volume of a mixing zone area, the Department may use appropriate mixing zone guidelines to assess the biological, physical, and chemical character of receiving waters, and effluent, and the most appropriate placement of the outfall, to protect instream water quality, public health, and other beneficial uses. Based on receiving water and effluent characteristics, the Department shall define a mixing zone in the immediate area of a wastewater discharge to:

(A) Be as small as feasible;

(B) Avoid overlap with any other mixing zones to the extent possible and be less than the total stream width as necessary to allow passage of fish and other aquatic organisms;

(C) Minimize adverse effects on the indigenous biological community especially when species are present that warrant special protection for their economic importance, tribal significance, ecological uniqueness, or for other similar reasons as determined by the Department and does not block the free passage of aquatic life;

(D) Not threaten public health;

(E) Minimize adverse effects on other designated beneficial uses outside the mixing zone.

(d) The Department may request the applicant of a permitted discharge for which a mixing zone is required, to submit all information necessary to define a mixing zone, such as:

(A) Type of operation to be conducted;

(B) Characteristics of effluent flow rates and composition;

(C) Characteristics of low flows of receiving waters;

(D) Description of potential environmental effects;

(E) Proposed design for outfall structures.

(e) The Department may, as necessary, require mixing zone monitoring studies and/or bioassays to be conducted to evaluate water quality or biological status within and outside the mixing zone boundary;

(f) The Department may change mixing zone limits or require the relocation of an outfall if it determines that the water quality within the mixing zone adversely affects any existing beneficial uses in the receiving waters.

(g) **Alternate requirements for mixing zones**: For some existing or proposed discharges to some receiving streams, it may not be practicable to treat wastewater to meet instream water quality standards at the point of discharge or within a short distance from the point of discharge. Some of these discharges could be allowed without impairing the overall ecological integrity of the receiving streams, or may provide an overall benefit to the receiving stream. This section specifies the conditions and circumstances under which a mixing zone may be allowed by the Department that extends beyond the immediate area around a discharge point, or that extends across a stream width. An alternate mixing zone may be approved if the applicant demonstrates to the Department's satisfaction that the discharge (A) creates an overall environmental benefit, or (B) is to a constructed water course, or (C) is insignificant. The three circumstances under which alternate mixing zones may be established are described further below.

(A) **Overall environmental benefit.**

(i) Qualifying for alternate mixing zone based on overall environmental benefit: In order to qualify for an alternate mixing zone based on a finding of overall environmental benefit, the discharger must demonstrate to the Department's satisfaction the following:

(a) That all practical strategies have been or will be implemented to minimize the pollutant loads in the effluent; and

(b) For proposed increased discharges, the current actual discharge and mixing zone does not meet the requirements of a standard mixing zone; and

(c) Either that, on balance, an environmental benefit would be lost if the discharge did not occur, or that the discharger is prepared to undertake other actions that will mitigate the effect of the discharge to an extent resulting in a net environmental benefit to the receiving stream.

(d) For the purposes of this rule, the term "practical" shall include environmental impact, availability of alternatives, cost of alternatives, and other relevant factors.

(ii) Studies required and evaluation of studies: In order to demonstrate that, on balance, an environmental benefit will result from the discharge, the following information shall be provided by the applicant:

(a) The effluent flow and pollutant loads that are detected or expected in the effluent, by month, both average and expected worst case discharges. The parameters to be evaluated include at a minimum temperature, biochemical oxygen demand, total suspended solids, total dissolved solids, pH, settleable solids, e. coli bacteria, oil and grease, any pollutants listed in Table 20 of this rule division, and any pollutant for which the receiving stream has been designated by the Department as water quality limited; and

(b) Receiving stream flow, by month; and

(c) The expected impact of the discharge, by month, on the receiving stream for the entire proposed mixing zone area for all of the pollutants listed above. Included in this analysis shall be a comparison of the receiving stream water quality with the discharge and without the discharge; and

(d) A description of fish, other vertebrate populations, and macroinvertebrates that reside in or are likely to pass through the proposed mixing zone, including expected location (if known), species identification, stage of development, and time of year when their presence is expected. For existing discharges, the applicant shall provide the same information for similar nearby streams that are unaffected by wastewater discharges. In addition, any threatened or endangered species in the immediate vicinity of the receiving stream shall be identified; and

(e) The expected impact of the discharge on aquatic organisms and/or fish passage, including any expected negative impacts from the effluent attracting fish where that is not desirable; and

(f) A description of the expected environmental benefits to be derived from the discharge or other mitigation measures proposed by the applicant, including but not limited to improvements in water quality, improvements in fish passage, and improvements in aquatic habitat. If the applicant proposes to undertake mitigation measures designed to provide environmental benefits (e.g., purchasing water or water conservation rights to increase stream flows or establishing stream cover to decrease temperature), the applicant shall describe the mitigation measures in detail, including a description of the steps it will take to ensure that the benefits of the mitigation measures are attained and are not lost or diminished over time.

(g) Some or all of the above study requirements may be waived by the Department, if the Department determines that the information is not needed. In the event that the Department does waive some or all of the above study requirements, the basis for waiving the requirements will be included in the permit evaluation report upon the next permit renewal or modification relating to the mixing zone.

(h) Upon request of the Department, the applicant shall conduct additional studies to further evaluate the impact of the discharge, which may include whole effluent toxicity testing, stream surveys for water quality, stream surveys for fish and other aquatic organisms, or other studies as specified by the Department.

(i) In evaluating whether an existing or proposed increase in an existing discharge would result in a net environmental benefit, the applicant shall use the native biological community in a nearby, similar stream that is unaffected by wastewater discharges. The Department shall consider all information generated as required in this rule and other relevant information. The evaluation shall consider benefits to the native aquatic biological community only.

(iii) Permit conditions: Upon determination by the Department that the discharge and mitigation measures (if any) will likely result in an overall environmental benefit, the Department shall include appropriate permit conditions to insure that the environmental benefits are attained and continue. Such permit conditions may include but not be limited to:

(a) Maximum allowed effluent flows and pollutant loads;

(b) Requirements to maintain land ownership, easements, contracts, or other legally binding measures necessary to assure that mitigation measures, if any, remain in place and effective;

(c) Special operating conditions;

(d) Monitoring and reporting requirements; and

(e) Studies to evaluate the effectiveness of mitigation measures.

(B) **Constructed water course**: A mixing zone may be extended through a constructed water course and into a natural water course. For the purposes of this rule, a constructed water course is one that was constructed for irrigation, site drainage, or wastewater conveyance, and has the following characteristics:

(i) Irrigation flows, stormwater runoff, or wastewater flows have replaced natural streamflow regimes; and

(ii) The channel form is greatly simplified in lengthwise and cross sectional profiles; and

(iii) Physical and biological characteristics that differ significantly from nearby natural streams; and

(iv) A much lower diversity of aquatic species than found in nearby natural streams; and

(v) If the constructed water course is an irrigation canal, then it must have effective fish screens in place to qualify as a constructed water course.

(C) **Insignificant discharges**: Insignificant discharges are those that either by volume, pollutant characteristics, and/or temporary nature are expected to have little if any impact on beneficial uses in the receiving stream, and for which the extensive evaluations required for discharges to smaller streams are not warranted. For the purposes of this rule, only filter backwash discharges and underground storage tank cleanups are considered insignificant discharges.

(D) **Other requirements for alternate mixing zones**: The following are additional requirements for dischargers requesting an alternate mixing zone:

(i) Most discharges that qualify for an alternate mixing zone will extend through the receiving stream until a larger stream is reached, where thorough mixing of the effluent can occur and where the edge of the allowed mixing zone will be located. The portion of the mixing zone in the larger stream must meet all of the requirements of the standard mixing zone, including not blocking aquatic life passage; and

(ii) An alternate mixing zone shall not be granted if a municipal drinking water intake is located within the proposed mixing zone, and the discharge has a significant adverse impact on the drinking water source; and

(iii) The discharge will not pose an unreasonable hazard to the environment or pose a significant health risk, considering the likely pathways of exposure; and

(iv) The discharge shall not be acutely toxic to organisms passing through the mixing zone; and

(v) An alternate mixing zone shall not be granted if the substances discharged may accumulate in the sediments or bioaccumulate in aquatic life or wildlife to levels that adversely affect public health, safety, or welfare; aquatic life; wildlife; or other designated beneficial uses; and

(vi) In the event that the receiving stream is water quality limited, the requirements for discharges to water quality limited streams supersede this rule.

(5) Testing methods: The analytical testing methods for determining compliance with the water quality standards contained in this rule shall be in accordance with the most recent edition of **Standard Methods for the Examination of Water and Waste Water published jointly by the American Public Health Association, American Water Works Association, and Water Pollution Control Federation,** unless the Department has published an applicable superseding method, in which case testing shall be in accordance with the superseding method; provided, however, that testing in accordance with an alternative method shall comply with this rule if the Department has published the method or has approved the method in writing.

[**Publications:** The publication(s) referred to or incorporated by reference in this rule are available from the office of the Department of Environmental Quality.]

Stat. Auth.: ORS 468B.035 & 468.735 ORS 468B.048
Stat. Implemented: ORS 468B.048
Hist.: DEQ 128, f. & ef. 1-21-77; DEQ 1-1980, f. & ef. 1-9-80; DEQ 18-1987, f. & ef. 9-4-87; DEQ 14-1991, f. & cert. ef. 8-13-91; DEQ 17-1992, f. & cert. ef. 8-7-92 (and corrected 8-13-92)

Minimum Design Criteria for Treatment and Control of Wastes

340-41-735 Subject to the implementation program set forth in OAR 340-41-120, prior to discharge of any wastes from any new or modified facility to any waters of the Grande Ronde River Basin, such wastes shall be treated and controlled in facilities designed in accordance with the following minimum criteria (In designing treatment facilities, average conditions and a normal range of variability are generally used in establishing design criteria. A facility once completed and placed in operation should operate at or near the design limit most of the time but may operate below the design criteria limit at times due to variables which are unpredictable or uncontrollable. This is particularly true for biological treatment facilities. The actual operating limits are intended to be established by permit pursuant to ORS 468.740 and recognize that the actual performance level may at times be less than the design criteria).

(1) Sewage wastes:

(a) During periods of low stream flows (approximately June 1 to October 31): Treatment resulting in monthly average effluent concentra-tions not to exceed 20 mg/l of BOD and 20 mg/l of suspended solids or equivalent control;

(b) During the period of high stream flows (approximately November 1 to May 31): A minimum of secondary treatment or equivalent control and unless otherwise specifically authorized by the Department, operation of all waste treatment and control facilities at maximum practicable efficiency and effectiveness so as to minimize waste discharges to public waters;

(c) Effluent BOD concentrations in mg/l, divided by the dilution factor (ratio of receiving stream flow to effluent flow) shall not exceed one unless otherwise approved by the EQC;

(d) Sewage wastes shall be disinfected, after treatment, equivalent to thorough mixing with sufficient chlorine to provide a residual of at least 1 part per million after 60 minutes of contact time unless otherwise specifically authorized by permit;

(e) Positive protection shall be provided to prevent bypassing raw or inadequately treated sewage to public waters unless otherwise approved by the Department where elimination of inflow and infiltration would be necessary but not presently practicable;

(f) More stringent waste treatment and control requirements may be imposed where special conditions may require.

(2) Industrial wastes:

(a) After maximum practicable inplant control, a minimum of secondary treatment or equivalent control (reduction of suspended solids and organic material where present in significant quantities, effective disinfection where bacterial organisms of public health significance are present, and control of toxic or other deleterious substances);

(b) Specific industrial waste treatment requirements shall be determined on an individual basis in accordance with the provisions of this plan, applicable federal requirements, and the

following:

(A) The uses which are or may likely be made of the receiving stream;

(B) The size and nature of flow of the receiving stream;

(C) The quantity and quality of wastes to be treated; and

(D) The presence or absence of other sources of pollution on the same watershed.

(c) Where industrial, commercial, or agricul-tural effluents contain significant quantities of potentially toxic elements, treatment requirements shall be determined utilizing appropriate bioassays;

(d) Industrial cooling waters containing significant heat loads shall be subjected to offstream cooling or heat recovery prior to discharge to public waters;

(e) Positive protection shall be provided to prevent bypassing of raw or inadequately treated industrial wastes to any public waters;

(f) Facilities shall be provided to prevent and contain spills of potentially toxic or hazardous materials and a positive program for containment and cleanup of such spills should they occur shall be developed and maintained.

Stat. Auth.: ORS Ch. 468
Hist.: DEQ 128, f. & ef. 1-21-77

Special Policies and Guidelines

340-041-0745

(1) This rule establishes special policies and requirements for portions of Catherine Creek and the Grande Ronde River. These waterbodies are currently listed as water quality limited and these rules are intended to bring the waterbodies into compliance with standards for dissolved oxygen, pH, temperature, and bacteria. The rule provides for modification of waste water control facility plans, development of water quality management plans, and establishment of instream concentration limits. These measures are intended to control the growth of periphyton that is contributing to exceedances of the instream water quality standards for pH and dissolved oxygen. The growth of periphyton is also affected by other factors such as flow, temperature and sunlight.

(2) This rule applies to Catherine Creek from the City of Union to the Grande Ronde River (and all tributaries that enter this segment of the creek) and the Grande Ronde River from Five Points Creek to its confluence with the Wallowa River (and all tributaries that enter this segment of the river).

(b) Except as provided below, no wastewater discharge or other activity is allowed if the discharge or other activity will cause the following nutrient concentrations to be exceeded:

* Orthophosphate Phosphorus (as P) 5ug/L
* Dissolved Inorganic Nitrogen (ammonia + nitrite + nitrate, as N) 40ug/L

(i) The concentrations do not become effective until Department-approved wastewater control facility plans and water quality management plans are fully implemented or December 31, 2002, unless otherwise extended by the Environmental Quality Commission for good cause.

(ii) The Department can waive these nutrient concentration limits when the Department determines conditions are such that higher nutrient concentrations will not result in violations of Water Quality Standards.

(c) Within one year of adoption of this rule, the Cities of La Grande and Union shall submit to the Department a facilities plan describing how they will modify and upgrade their

wastewater treatment facilities by December 31, 2002, to comply with this rule and all other applicable rules regarding the treatment and disposal of wastewater. This facilities plan shall include a description of the present physical and institutional infrastructure, all necessary intergovernmental agreements and approvals as appropriate, time schedules for accomplishing goals including interim objectives, and a financing plan.
(d) Within one year of adoption of this rule, Boise Cascade Corporation shall submit a facilities plan which describes how wastewater discharges will be controlled at the Island City particle board plant by December 31, 2002, to comply with this rule and all other applicable rules regulating waste discharge.

(e) In order to control nonpoint source pollution, the Department shall establish an advisory committee to develop a process and time schedule for addressing nonpoint source contributions to identified water quality standards violations in the stream segments identified in this rule and for meeting the in-stream nutrient criteria established in this rule. Within eighteen (18) months of the adoption of this rule, Union County, the incorporated cities within the Grande Ronde Valley, and the Oregon Departments of Agriculture shall submit a water quality management plan that describes how nonpoint source pollution will be controlled by December 31, 2002 to reduce in-stream nutrient concentrations to achieve the criteria established in this rule and to comply with in-stream water quality standards violations as listed on the 303(d) list. For Agricultural Water Quality Management Plans, plans shall be developed consistent with OARs 603-90-000 through 603-90-050. Silvicultural activities shall be addressed pursuant to a ORS 468B.110 and ORS 527.765 through 527.770 and consistent with a Memorandum of Understanding to be developed between the Oregon Department of Forestry and the Department of Environmental Quality.

(f) The Department shall review amended facility plans, water quality management plans and other measures undertaken in accordance with this rule to determine whether the plans and measures are reasonably likely to assure that relevant water quality standards will be achieved. If a facility plan is rejected, reasons shall be specified and a schedule for modification established. The Department shall provide an opportunity for public comment and a hearing before submitting plans or other measures to the Environmental Protection Agency

(g) The Commission recognizes that it may take several years after full implementation before water quality management plans become effective in reducing and controlling pollution. In addition, the Commission recognizes that technology for controlling nonpoint source pollution is, in many cases, in the development stages and that it may take one or more iterations before effective techniques are found. It is possible that after application of all reasonable best management practices, the in-stream criteria established in subparagraph (b) of this section cannot be achieved. In this regard, the Commission directs the Department to work cooperatively with those nonpoint source entities that act in good faith to meet the requirements of this rule. If a nonpoint source entity complies with its State-approved water quality management plan or forest practice rules, it will be deemed to be in compliance with this rule.

Stat, Author.: ORS 468.020; 468B.035
Stat. Impl.: 468B.030; 468B.110; 468B.048

Powder Basin

Beneficial Water Uses to be Protected

340-41-762 Water quality in the Powder River Basin (see **Figures 1** and **15**) shall be managed to protect the recognized beneficial uses as indicated in **Table 14**.

Stat. Auth.: ORS Ch. 468
Hist.: DEQ 128, f. & ef. 1-27-77

Water Quality Standards Not to be Exceeded (To be Adopted Pursuant to ORS 468.735 and Enforceable Pursuant to ORS 468.720, 468.990 and 468.992)

340-41-765 (1) Notwithstanding the water quality standards contained below, the highest and best practicable treatment and/or control of wastes, activities, and flows shall in every case be provided so as to maintain dissolved oxygen and overall water quality at the highest possible levels and water temperatures, coliform bacteria concentrations, dissolved chemical substances, toxic materials, radioactivity, turbidities, color, odor, and other deleterious factors at the lowest possible levels.

(2) No wastes shall be discharged and no activities shall be conducted which either alone or in combination with other wastes or activities will cause violation of the following standards in the waters of the Powder River Basin:

(a) Dissolved oxygen (DO): The changes adopted by the Commission on January 11, 1996, become effective July 1, 1996. Until that time, the requirements of this rule that were in effect on January 10, 1996, apply:

(A) For waterbodies identified by the Department as providing salmonid spawning, during the periods from spawning until fry emergence from the gravels, the following criteria apply:

(i) The dissolved oxygen shall not be less than 11.0 mg/l. However, if the minimum intergravel dissolved oxygen, measured as a spatial median, is 8.0 mg/l or greater, then the DO criterion is 9.0 mg/l;

(ii) Where conditions of barometric pressure, altitude, and temperature preclude attainment of the 11.0 mg/l or 9.0 mg/l criteria, dissolved oxygen levels shall not be less than 95 percent of saturation.

(B) For waterbodies identified by the Department as providing salmonid spawning during the period from spawning until fry emergence from the gravels, the spatial median intergravel dissolved oxygen concentration shall not fall below 6.0 mg/l;

(C) A spatial median of 8.0 mg/l intergravel dissolved oxygen level shall be used to identify areas where the recognized beneficial use of salmonid spawning, egg incubation and fry emergence from the egg and from the gravels may be impaired and therefore require action by the Department. Upon determination that the spatial median intergravel dissolved oxygen concentration is below 8.0 mg/l, the Department may, in accordance with priorities established by the Department for evaluating water quality impaired waterbodies, determine whether to list the waterbody as water quality limited under the Section 303(d) of the Clean Water Act, initiate pollution control strategies as warranted, and where needed cooperate with appropriate designated management agencies to evaluate and implement necessary best management practices for nonpoint source pollution control;

(D) For waterbodies identified by the Department as providing cold-water aquatic life, the dissolved oxygen shall not be less than 8.0 mg/l as an absolute minimum. Where conditions of barometric pressure, altitude, and temperature preclude attainment of the 8.0 mg/l, dissolved

oxygen shall not be less than 90 percent of saturation. At the discretion of the Department, when the Department determines that adequate information exists, the dissolved oxygen shall not fall below 8.0 mg/l as a 30-day mean minimum, 6.5 mg/l as a seven-day minimum mean, and shall not fall below 6.0 mg/l as an absolute minimum (**Table 21**);

(E) For waterbodies identified by the Department as providing cool-water aquatic life, the dissolved oxygen shall not be less than 6.5 mg/l as an absolute minimum. At the discretion of the Department, when the Department determines that adequate information exists, the dissolved oxygen shall not fall below 6.5 mg/l as a 30-day mean minimum, 5.0 mg/l as a seven-day minimum mean, and shall not fall below 4.0 mg/l as an absolute minimum (**Table 21**);

(F) For waterbodies identified by the Department as providing warm-water aquatic life, the dissolved oxygen shall not be less than 5.5 mg/l as an absolute minimum. At the discretion of the Department, when the Department determines that adequate information exists, the dissolved oxygen shall not fall below 5.5 mg/l as a 30-day mean minimum, and shall not fall below 4.0 mg/l as an absolute minimum (**Table 21**);

(b) Temperature: The changes adopted by the Commission on January 11, 1996, become effective July 1, 1996. Until that time, the requirements of this rule that were in effect on January 10, 1996, apply. The method for measuring the numeric temperature criteria specified in this rule is defined in OAR 340-41-006(54):

(A) To accomplish the goals identified in OAR 340-41-120(11), unless specifically allowed under a Department-approved surface water temperature management plan as required under OAR 340-41-026(3)(a)(D), no measurable surface water temperature increase resulting from anthropogenic activities is allowed:

(i) In a basin for which salmonid fish rearing is a designated beneficial use, and in which surface water temperatures exceed 64.0°F (17.8°C);

(ii) In waters and periods of the year determined by the Department to support native salmonid spawning, egg incubation, and fry emergence from the egg and from the gravels in a basin which exceeds 55.0°F (12.8°C);

(iii) In waters determined by the Department to support or to be necessary to maintain the viability of native Oregon bull trout, when surface water temperatures exceed 50.0°F (10.0°C);

(iv) In waters determined by the Department to be ecologically significant cold-water refugia;

(v) In stream segments containing federally listed Threatened and Endangered species if the increase would impair the biological integrity of the Threatened and Endangered population;

(vi) In Oregon waters when the dissolved oxygen (DO) levels are within 0.5 mg/l or 10 percent saturation of the water column or intergravel DO criterion for a given stream reach or subbasin;

(vii) In natural lakes.

(B) An exceedance of the numeric criteria identified in subparagraphs (A)(i) through (iii) of this subsection will not be deemed a temperature standard violation if it occurs when the air temperature during the warmest seven-day period of the year exceeds the 90th percentile of the seven-day average daily maximum air temperature calculated in a yearly series over the historic record. However, during such periods, the anthropogenic sources must still continue to comply with their surface water temperature management plans developed under OAR 340-41-026(3)(a)(D);

(C) Any source may petition the Commission for an exception to subparagraphs (A)(i) through (vii) of this subsection for discharge above the identified criteria if:

(i) The source provides the necessary scientific information to describe how the designated beneficial uses would not be adversely impacted; or

(ii) A source is implementing all reasonable management practices or measures; its activity will not significantly affect the beneficial uses; and the environmental cost of treating the parameter to the level necessary to assure full protection would outweigh the risk to the resource.

(c) Turbidity (Nephelometric Turbidity Units, NTU): No more than a ten percent cumulative increase in natural stream turbidities shall be allowed, as measured relative to a control point immediately upstream of the turbidity causing activity. However, limited duration activities necessary to address an emergency or to accommodate essential dredging, construction or other legitimate activities and which cause the standard to be exceeded may be authorized provided all practicable turbidity control techniques have been applied and one of the following has been granted:

(A) Emergency activities: Approval coordinated by DEQ with the Department of Fish and Wildlife under conditions they may prescribe to accommodate response to emergencies or to protect public health and welfare;

(B) Dredging, Construction or other Legitimate Activities: Permit or certification authorized under terms of Section 401 or 404 (Permits and Licenses, Federal Water Pollution Control Act) or OAR 141-85-100 et seq. (Removal and Fill Permits, Division of State Lands), with limitations and conditions governing the activity set forth in the permit or certificate.

(d) pH (hydrogen ion concentration): pH values shall not fall outside the ranges identified in paragraphs (A) and (B) of this subsection. The following exception applies: Waters impounded by dams existing on January 1, 1996, which have pHs that exceed the criteria shall not be considered in violation of the standard if the Department determines that the exceedance would not occur without the impoundment and that all practicable measures have been taken to bring the pH in the impounded waters into compliance with the criteria:

(A) Mainstem Snake River (river miles 260 to 335): 7.0 - 9.0;

(B) All other Basin streams: 6.5 - 9.0. When greater than 25 percent of ambient measurements taken between June and September are greater than pH 8.7, and as resources are available according to priorities set by the Department, the Department shall determine whether the values higher than 8.7 are anthropogenic or natural in origin.

(e) Bacteria standards:

(A) Numeric Criteria: Organisms of the coliform group commonly associated with fecal sources (MPN or equivalent membrane filtration using a representative number of samples) shall not exceed the criteria described in subparagraphs (i) and (ii) of this paragraph. Freshwaters:

(i) A 30-day log mean of 126 *E. coli* organisms per 100 ml, based on a minimum of five (5) samples;

(ii) No single sample shall exceed 406 *E. coli* organisms per 100 ml;

(B) Raw Sewage Prohibition: No sewage shall be discharged into or in any other manner be allowed to enter the waters of the State unless such sewage has been treated in a manner approved by the Department or otherwise allowed by these rules;

(C) Animal Waste: Runoff contaminated with domesticated animal wastes shall be minimized and treated to the maximum extent practicable before it is allowed to enter waters of

the State;

(D) Effluent Limitations and Water Quality Limited Waterbodies: Effluent limitations to implement the criteria in this rule are found in OAR 340-41-120(12) through (16). Implementation of the criteria in this rule in water quality limited waterbodies is described in OAR 340-41-026(3)(a)(I) and OAR 340-41-120(17).

(f) Bacterial pollution or other conditions deleterious to waters used for domestic purposes, livestock watering, irrigation, bathing, or otherwise injurious to public health shall not be allowed;

(g) The liberation of dissolved gases, such as carbon dioxide, hydrogen sulfide, or other gases, in sufficient quantities to cause objectionable odors or to be deleterious to fish or other aquatic life, navigation, recreation, or other reasonable uses made of such waters shall not be allowed;

(h) Development of fungi or other growths having a deleterious effect on stream bottoms, fish or other aquatic life, or which are injurious to health, recreation, or industry shall not be allowed;

(i) The creation of tastes or odors or toxic or other conditions that are deleterious to fish or other aquatic life or affect the potability of drinking water or the palatability of fish or shellfish shall not be allowed;

(j) The formation of appreciable bottom or sludge deposits or the formation of any organic or inorganic deposits deleterious to fish or other aquatic life or injurious to public health, recreation, or industry shall not be allowed;

(k) Objectionable discoloration, scum, oily sleek or floating solids, or coating of aquatic life with oil films shall not be allowed;

(l) Aesthetic conditions offensive to the human senses of sight, taste, smell, or touch shall not be allowed;

(m) Radioisotope concentrations shall not exceed maximum permissible concentrations (MPC's) in drinking water, edible fishes or shellfishes, wildlife, irrigated crops, livestock and dairy products, or pose an external radiation hazard;

(n) The concentration of total dissolved gas relative to atmospheric pressure at the point of sample collection shall not exceed 110 percent of saturation, except when stream flow exceeds the ten-year, seven-day average flood. However, for Hatchery receiving waters and waters of less than two feet in depth, the concentration of total dissolved gas relative to atmospheric pressure at the point of sample collection shall not exceed 105 percent of saturation;

(o) Total Dissolved Solids: Guide concentrations listed below shall not be exceeded unless otherwise specifically authorized by DEQ upon such conditions as it may deem necessary to carry out the general intent of this plan and to protect the beneficial uses set forth in OAR 340-41-762: Mainstem Snake River — 750.0 mg/l;

(p) Toxic Substances:

(A) Toxic substances shall not be introduced above natural background levels in the waters of the state in amounts, concentrations, or combinations which may be harmful, may chemically change to harmful forms in the environment, or may accumulate in sediments or bioaccumulate in aquatic life or wildlife to levels that adversely affect public health, safety, or welfare; aquatic life; wildlife; or other designated beneficial uses;

(B) Levels of toxic substances shall not exceed the criteria listed in **Table 20** which were

based on criteria established by EPA and published in **Quality Criteria for Water (1986)**, unless otherwise noted;

(C) The criteria in paragraph (B) of this subsection shall apply unless data from scientifically valid studies demonstrate that the most sensitive designated beneficial uses will not be adversely affected by exceeding a criterion or that a more restrictive criterion is warranted to protect beneficial uses, as accepted by the Department on a site specific basis. Where no published EPA criteria exist for a toxic substance, public health advisories and other published scientific literature may be considered and used, if appropriate, to set guidance values;

(D) Bio-assessment studies such as laboratory bioassays or instream measurements of indigenous biological communities, shall be conducted, as the Department deems necessary, to monitor the toxicity of complex effluents, other suspected discharges or chemical substances without numeric criteria, to aquatic life. These studies, properly conducted in accordance with standard testing procedures, may be considered as scientifically valid data for the purposes of paragraph (C) of this subsection. If toxicity occurs, the Department shall evaluate and implement measures necessary to reduce toxicity on a case-by-case basis.

(3) Where the naturally occurring quality parameters of waters of the Powder River Basin are outside the numerical limits of the above assigned water quality standards, the naturally occurring water quantity shall be the standard. However, in such cases special restrictions, described in OAR 340-41-026(3)(a)(C)(iii), apply to discharges that affect dissolved oxygen.

(4) Mixing zones:

(a) The Department may allow a designated portion of a receiving water to serve as a zone of dilution for wastewaters and receiving waters to mix thoroughly and this zone will be defined as a mixing zone;

(b) The Department may suspend all or part of the water quality standards, or set less restrictive standards, in the defined mixing zone, provided that the following conditions are met:

(A) The water within the mixing zone shall be free of:

(i) Materials in concentrations that will cause acute toxicity to aquatic life as measured by a Department approved bioassay method. Acute toxicity is lethality to aquatic life as measured by a significant difference in lethal concentration between the control and 100 percent effluent in an acute bioassay test. Lethality in 100 percent effluent may be allowed due to ammonia and chlorine only when it is demonstrated on a case-by-case basis that immediate dilution of the effluent within the mixing zone reduces toxicity below lethal concentrations. The Department may on a case-by-case basis establish a zone of immediate dilution if appropriate for other parameters;

(ii) Materials that will settle to form objectionable deposits;

(iii) Floating debris, oil, scum, or other materials that cause nuisance conditions;

(iv) Substances in concentrations that produce deleterious amounts of fungal or bacterial growths.

(B) The water outside the boundary of the mixing zone shall:

(i) Be free of materials in concentrations that will cause chronic (sublethal) toxicity. Chronic toxicity is measured as the concentration that causes long-term sublethal effects, such as significantly impaired growth or reproduction in aquatic organisms, during a testing period based on test species life cycle. Procedures and end points will be specified by the Department in wastewater discharge permits;

(ii) Meet all other water quality standards under normal annual low flow conditions.

(c) The limits of the mixing zone shall be described in the wastewater discharge permit. In determining the location, surface area, and volume of a mixing zone area, the Department may use appropriate mixing zone guidelines to assess the biological, physical, and chemical character of receiving waters, and effluent, and the most appropriate placement of the outfall, to protect instream water quality, public health, and other beneficial uses. Based on receiving water and effluent characteristics, the Department shall define a mixing zone in the immediate area of a wastewater discharge to:

(A) Be as small as feasible;

(B) Avoid overlap with any other mixing zones to the extent possible and be less than the total stream width as necessary to allow passage of fish and other aquatic organisms;

(C) Minimize adverse effects on the indigenous biological community especially when species are present that warrant special protection for their economic importance, tribal significance, ecological uniqueness, or for other similar reasons as determined by the Department and does not block the free passage of aquatic life;

(D) Not threaten public health;

(E) Minimize adverse effects on other designated beneficial uses outside the mixing zone.

(d) The Department may request the applicant of a permitted discharge for which a mixing zone is required, to submit all information necessary to define a mixing zone, such as:

(A) Type of operation to be conducted;

(B) Characteristics of effluent flow rates and composition;

(C) Characteristics of low flows of receiving waters;

(D) Description of potential environmental effects;

(E) Proposed design for outfall structures.

(e) The Department may, as necessary, require mixing zone monitoring studies and/or bioassays to be conducted to evaluate water quality or biological status within and outside the mixing zone boundary;

(f) The Department may change mixing zone limits or require the relocation of an outfall if it determines that the water quality within the mixing zone adversely affects any existing beneficial uses in the receiving waters.

(g) **Alternate requirements for mixing zones**: For some existing or proposed discharges to some receiving streams, it may not be practicable to treat wastewater to meet instream water quality standards at the point of discharge or within a short distance from the point of discharge. Some of these discharges could be allowed without impairing the overall ecological integrity of the receiving streams, or may provide an overall benefit to the receiving stream. This section specifies the conditions and circumstances under which a mixing zone may be allowed by the Department that extends beyond the immediate area around a discharge point, or that extends across a stream width. An alternate mixing zone may be approved if the applicant demonstrates to the Department's satisfaction that the discharge (A) creates an overall environmental benefit, or (B) is to a constructed water course, or (C) is insignificant. The three circumstances under which alternate mixing zones may be established are described further below.

(A) **Overall environmental benefit**.

(i) Qualifying for alternate mixing zone based on overall environmental benefit: In order

to qualify for an alternate mixing zone based on a finding of overall environmental benefit, the discharger must demonstrate to the Department's satisfaction the following:

(a) That all practical strategies have been or will be implemented to minimize the pollutant loads in the effluent; and

(b) For proposed increased discharges, the current actual discharge and mixing zone does not meet the requirements of a standard mixing zone; and

(c) Either that, on balance, an environmental benefit would be lost if the discharge did not occur, or that the discharger is prepared to undertake other actions that will mitigate the effect of the discharge to an extent resulting in a net environmental benefit to the receiving stream.

(d) For the purposes of this rule, the term "practical" shall include environmental impact, availability of alternatives, cost of alternatives, and other relevant factors.

(ii) Studies required and evaluation of studies: In order to demonstrate that, on balance, an environmental benefit will result from the discharge, the following information shall be provided by the applicant:

(a) The effluent flow and pollutant loads that are detected or expected in the effluent, by month, both average and expected worst case discharges. The parameters to be evaluated include at a minimum temperature, biochemical oxygen demand, total suspended solids, total dissolved solids, pH, settleable solids, e. coli bacteria, oil and grease, any pollutants listed in Table 20 of this rule division, and any pollutant for which the receiving stream has been designated by the Department as water quality limited; and

(b) Receiving stream flow, by month; and

(c) The expected impact of the discharge, by month, on the receiving stream for the entire proposed mixing zone area for all of the pollutants listed above. Included in this analysis shall be a comparison of the receiving stream water quality with the discharge and without the discharge; and

(d) A description of fish, other vertebrate populations, and macroinvertebrates that reside in or are likely to pass through the proposed mixing zone, including expected location (if known), species identification, stage of development, and time of year when their presence is expected. For existing discharges, the applicant shall provide the same information for similar nearby streams that are unaffected by wastewater discharges. In addition, any threatened or endangered species in the immediate vicinity of the receiving stream shall be identified; and

(e) The expected impact of the discharge on aquatic organisms and/or fish passage, including any expected negative impacts from the effluent attracting fish where that is not desirable; and

(f) A description of the expected environmental benefits to be derived from the discharge or other mitigation measures proposed by the applicant, including but not limited to improvements in water quality, improvements in fish passage, and improvements in aquatic habitat. If the applicant proposes to undertake mitigation measures designed to provide environmental benefits (e.g., purchasing water or water conservation rights to increase stream flows or establishing stream cover to decrease temperature), the applicant shall describe the mitigation measures in detail, including a description of the steps it will take to ensure that the benefits of the mitigation measures are attained and are not lost or diminished over time.

(g) Some or all of the above study requirements may be waived by the Department, if the Department determines that the information is not needed. In the event that the Department does waive some or all of the above study requirements, the basis for waiving the requirements will be included in the permit evaluation report upon the next permit renewal or modification relating to

the mixing zone.

(h) Upon request of the Department, the applicant shall conduct additional studies to further evaluate the impact of the discharge, which may include whole effluent toxicity testing, stream surveys for water quality, stream surveys for fish and other aquatic organisms, or other studies as specified by the Department.

(i) In evaluating whether an existing or proposed increase in an existing discharge would result in a net environmental benefit, the applicant shall use the native biological community in a nearby, similar stream that is unaffected by wastewater discharges. The Department shall consider all information generated as required in this rule and other relevant information. The evaluation shall consider benefits to the native aquatic biological community only.

(iii) Permit conditions: Upon determination by the Department that the discharge and mitigation measures (if any) will likely result in an overall environmental benefit, the Department shall include appropriate permit conditions to insure that the environmental benefits are attained and continue. Such permit conditions may include but not be limited to:

(a) Maximum allowed effluent flows and pollutant loads;

(b) Requirements to maintain land ownership, easements, contracts, or other legally binding measures necessary to assure that mitigation measures, if any, remain in place and effective;

(c) Special operating conditions;

(d) Monitoring and reporting requirements; and

(e) Studies to evaluate the effectiveness of mitigation measures.

(B) **Constructed water course**: A mixing zone may be extended through a constructed water course and into a natural water course. For the purposes of this rule, a constructed water course is one that was constructed for irrigation, site drainage, or wastewater conveyance, and has the following characteristics:

(i) Irrigation flows, stormwater runoff, or wastewater flows have replaced natural streamflow regimes; and

(ii) The channel form is greatly simplified in lengthwise and cross sectional profiles; and

(iii) Physical and biological characteristics that differ significantly from nearby natural streams; and

(iv) A much lower diversity of aquatic species than found in nearby natural streams; and

(v) If the constructed water course is an irrigation canal, then it must have effective fish screens in place to qualify as a constructed water course.

(C) **Insignificant discharges**: Insignificant discharges are those that either by volume, pollutant characteristics, and/or temporary nature are expected to have little if any impact on beneficial uses in the receiving stream, and for which the extensive evaluations required for discharges to smaller streams are not warranted. For the purposes of this rule, only filter backwash discharges and underground storage tank cleanups are considered insignificant discharges.

(D) **Other requirements for alternate mixing zones**: The following are additional requirements for dischargers requesting an alternate mixing zone:

(i) Most discharges that qualify for an alternate mixing zone will extend through the receiving stream until a larger stream is reached, where thorough mixing of the effluent can occur and where the edge of the allowed mixing zone will be located. The portion of the mixing zone in the larger stream must meet all of the requirements of the standard mixing zone, including not blocking aquatic life passage; and

(ii) An alternate mixing zone shall not be granted if a municipal drinking water intake is located within the proposed mixing zone, and the discharge has a significant adverse impact on the drinking water source; and

(iii) The discharge will not pose an unreasonable hazard to the environment or pose a significant health risk, considering the likely pathways of exposure; and

(iv) The discharge shall not be acutely toxic to organisms passing through the mixing zone; and

(v) An alternate mixing zone shall not be granted if the substances discharged may accumulate in the sediments or bioaccumulate in aquatic life or wildlife to levels that adversely affect public health, safety, or welfare; aquatic life; wildlife; or other designated beneficial uses; and

(vi) In the event that the receiving stream is water quality limited, the requirements for discharges to water quality limited streams supersede this rule.

(5) Testing methods: The analytical testing methods for determining compliance with the water quality standards contained in this rule shall be in accordance with the most recent edition of **Standard Methods for the Examination of Water and Waste Water published jointly by the American Public Health Association, American Water Works Association, and Water Pollution Control Federation**, unless the Department has published an applicable superseding method, in which case testing shall be in accordance with the superseding method; provided, however, that testing in accordance with an alternative method shall comply with this rule if the Department has published the method or has approved the method in writing.

[**Publications:** The publication(s) referred to or incorporated by reference in this rule are available from the office of the Department of Environmental Quality.]

Stat. Auth.: ORS 468B.035 & 468.735; ORS 468B.048
Stat. Implemented: ORS 468B.048
Hist.: DEQ 128, f. & ef. 1-21-77; DEQ 1-1980, f. & ef. 1-9-80; DEQ 18-1987, f. & ef. 9-4-87; DEQ 14-1991, f. & cert. ef. 8-13-91; DEQ 17-1992, f. & cert. ef. 8-7-92 (and corrected 8-13-92)

Minimum Design Criteria for Treatment and Control of Wastes

340-41-775 Subject to the implementation program set forth in OAR 340-41-120, prior to discharge of any wastes from any new or modified facility to any waters of the Powder River Basin, such wastes shall be treated and controlled in facilities designed in accordance with the following minimum criteria. (In designing treatment facilities, average conditions and a normal range of variability are generally used in establishing design criteria. A facility once completed and placed in operation should operate at or near the design limit most of the time but may operate below the design criteria limit at times due to variables which are unpredictable or uncontrollable. This is particularly true for biological treatment facilities. The actual operating limits are intended to be established by permit pursuant to ORS 468.740 and recognize that the actual performance level may at times be less than the design criteria.):

(1) Sewage wastes:

(a) A minimum of secondary treatment or equivalent control and unless otherwise specifically authorized by the Department, the operation of all waste treatment and control facilities at maximum practicable efficiency and effectiveness so as to minimize waste discharges to public

waters;

(b) Effluent BOD concentrations in mg/l, divided by the dilution factor (ratio of receiving stream flow to effluent flow) shall not exceed one unless otherwise approved by the EQC;

(c) Sewage wastes shall be disinfected, after treatment, equivalent to thorough mixing with sufficient chlorine to provide a residual of at least one part per million after 60 minutes of contact time unless otherwise specifically authorized by permit;

(d) Positive protection shall be provided to prevent bypassing raw or inadequately treated sewage to public waters unless otherwise approved by the Department where elimination of inflow and infiltration would be necessary but not presently practicable;

(e) More stringent waste treatment and control requirements may be imposed where special conditions may require.

(2) Industrial wastes:

(a) After maximum practicable inplant control, a minimum of secondary treatment or equivalent control (reduction of suspended solids and organic material where present in significant quantities, effective disinfection where bacterial organisms of public health significance are present, and control of toxic or other deleterious substances);

(b) Specific industrial waste treatment require-ment shall be determined on an individual basis in accordance with the provisions of this plan, applicable federal requirements, and the following:

(A) The uses which are or may likely be made of the receiving stream;

(B) The size and nature of flow of the receiving stream;

(C) The quantity and quality of wastes to be treated; and

(D) The presence or absence of other sources of pollution on the same watershed.

(c) Where industrial, commercial, or agricul-tural effluents contain significant quantities of potentially toxic elements, treatment requirements shall be determined utilizing appropriate bioassays;

(d) Industrial cooling waters containing significant heat loads shall be subjected to offstream cooling or heat recovery prior to discharge to public waters;

(e) Positive protection shall be provided to prevent bypassing of raw or inadequately treated industrial wastes to any public waters;

(f) Facilities shall be provided to prevent and contain spills of potentially toxic or hazardous materials and a positive program for containment and cleanup of such spills should they occur shall be developed and maintained.

Stat. Auth.: ORS Ch. 468
Hist.: DEQ 128, f. & ef. 1-21-77

Malheur River Basin

Beneficial Water Uses to be Protected

340-41-802 Water quality in the Malheur River Basin (see **Figures 1** and **16**) shall be managed to protect the recognized beneficial uses as indicated in **Table 15**.

Stat. Auth.: ORS Ch. 468
Hist.: DEQ 128, f. & ef. 1-27-77; DEQ 9-1985, f. & ef. 8-6-85

Water Quality Standards Not to be Exceeded (To be Adopted Pursuant to ORS 468.735 and Enforceable Pursuant to ORS 468.720, 468.990, and 468.992)

340-41-805 (1) Notwithstanding the water quality standards contained below, the highest and best practicable treatment and/or control of wastes, activities, and flows shall in every case be provided so as to maintain dissolved oxygen and overall water quality at the highest possible levels and water temperatures, coliform bacteria concentrations, dissolved chemical substances, toxic materials, radioactivity, turbidities, color, odor, and other deleterious factors at the lowest possible levels.

(2) No wastes shall be discharged and no activities shall be conducted which either alone or in combination with other wastes or activities will cause violation of the following standards in the waters of the Malheur River Basin:

(a) Dissolved oxygen (DO): The changes adopted by the Commission on January 11, 1996, become effective July 1, 1996. Until that time, the requirements of this rule that were in effect on January 10, 1996, apply:

(A) For waterbodies identified by the Department as providing salmonid spawning, during the periods from spawning until fry emergence from the gravels, the following criteria apply:

(i) The dissolved oxygen shall not be less than 11.0 mg/l. However, if the minimum intergravel dissolved oxygen, measured as a spatial median, is 8.0 mg/l or greater, then the DO criterion is 9.0 mg/l;

(ii) Where conditions of barometric pressure, altitude, and temperature preclude attainment of the 11.0 mg/l or 9.0 mg/l criteria, dissolved oxygen levels shall not be less than 95 percent of saturation.

(B) For waterbodies identified by the Department as providing salmonid spawning during the period from spawning until fry emergence from the gravels, the spatial median intergravel dissolved oxygen concentration shall not fall below 6.0 mg/l;

(C) A spatial median of 8.0 mg/l intergravel dissolved oxygen level shall be used to identify areas where the recognized beneficial use of salmonid spawning, egg incubation and fry emergence from the egg and from the gravels may be impaired and therefore require action by the Department. Upon determination that the spatial median intergravel dissolved oxygen concentration is below 8.0 mg/l, the Department may, in accordance with priorities established by the Department for evaluating water quality impaired waterbodies, determine whether to list the waterbody as water quality limited under the Section 303(d) of the Clean Water Act, initiate pollution control strategies as warranted, and where needed cooperate with appropriate designated management agencies to evaluate and implement necessary best management practices for nonpoint source pollution control;

(D) For waterbodies identified by the Department as providing cold-water aquatic life, the dissolved oxygen shall not be less than 8.0 mg/l as an absolute minimum. Where conditions of barometric pressure, altitude, and temperature preclude attainment of the 8.0 mg/l, dissolved oxygen shall not be less than 90 percent of saturation. At the discretion of the Department, when the Department determines that adequate information exists, the dissolved oxygen shall not fall below 8.0 mg/l as a 30-day mean minimum, 6.5 mg/l as a seven-day minimum mean, and shall not fall below 6.0 mg/l as an absolute minimum (**Table 21**);

(E) For waterbodies identified by the Department as providing cool-water aquatic life, the dissolved oxygen shall not be less than 6.5 mg/l as an absolute minimum. At the discretion of

the Department, when the Department determines that adequate information exists, the dissolved oxygen shall not fall below 6.5 mg/l as a 30-day mean minimum, 5.0 mg/l as a seven-day minimum mean, and shall not fall below 4.0 mg/l as an absolute minimum (**Table 21**);

(F) For waterbodies identified by the Department as providing warm-water aquatic life, the dissolved oxygen shall not be less than 5.5 mg/l as an absolute minimum. At the discretion of the Department, when the Department determines that adequate information exists, the dissolved oxygen shall not fall below 5.5 mg/l as a 30-day mean minimum, and shall not fall below 4.0 mg/l as an absolute minimum (**Table 21**);

(b) Temperature: The changes adopted by the Commission on January 11, 1996, become effective July 1, 1996. Until that time, the requirements of this rule that were in effect on January 10, 1996, apply. The method for measuring the numeric temperature criteria specified in this rule is defined in OAR 340-41-006(54):

(A) To accomplish the goals identified in OAR 340-41-120(11), unless specifically allowed under a Department-approved surface water temperature management plan as required under OAR 340-41-026(3)(a)(D), no measurable surface water temperature increase resulting from anthropogenic activities is allowed:

(i) In a basin for which salmonid fish rearing is a designated beneficial use, and in which surface water temperatures exceed 64.0°F (17.8°C);

(ii) In waters and periods of the year determined by the Department to support native salmonid spawning, egg incubation, and fry emergence from the egg and from the gravels in a basin which exceeds 55.0°F (12.8°C);

(iii) In waters determined by the Department to support or to be necessary to maintain the viability of native Oregon bull trout, when surface water temperatures exceed 50.0°F (10.0°C);

(iv) In waters determined by the Department to be ecologically significant cold-water refugia;

(v) In stream segments containing federally listed Threatened and Endangered species if the increase would impair the biological integrity of the Threatened and Endangered population;

(vi) In Oregon waters when the dissolved oxygen (DO) levels are within 0.5 mg/l or 10 percent saturation of the water column or intergravel DO criterion for a given stream reach or subbasin;

(vii) In natural lakes.

(B) An exceedance of the numeric criteria identified in subparagraphs (A)(i) through (iii) of this subsection will not be deemed a temperature standard violation if it occurs when the air temperature during the warmest seven-day period of the year exceeds the 90th percentile of the seven-day average daily maximum air temperature calculated in a yearly series over the historic record. However, during such periods, the anthropogenic sources must still continue to comply with their surface water temperature management plans developed under OAR 340-41-026(3)(a)(D);

(C) Any source may petition the Commission for an exception to subparagraphs (A)(i) through (vii) of this subsection for discharge above the identified criteria if:

(i) The source provides the necessary scientific information to describe how the designated beneficial uses would not be adversely impacted; or

(ii) A source is implementing all reasonable management practices or measures; its activity will not significantly affect the beneficial uses; and the environmental cost of treating the

parameter to the level necessary to assure full protection would outweigh the risk to the resource.

(c) Turbidity (Nephelometric Turbidity Units, NTU): No more than a 10 percent cumulative increase in natural stream turbidities shall be allowed, as measured relative to a control point immediately upstream of the turbidity causing activity. However, limited duration activities necessary to address an emergency or to accommodate essential dredging, construction or other legitimate activities and which cause the standard to be exceeded may be authorized provided all practicable turbidity control techniques have been applied and one of the following has been granted:

(A) Emergency activities: Approval coordinated by DEQ with the Department of Fish and Wildlife under conditions they may prescribe to accommodate response to emergencies or to protect public health and welfare;

(B) Dredging, Construction or other Legitimate Activities: Permit or certification authorized under terms of Section 401 or 404 (Permits and Licenses, Federal Water Pollution Control Act) or OAR 141-85-100 et seq. (Removal and Fill Permits, Division of State Lands), with limitations and conditions governing the activity set forth in the permit or certificate.

(d) pH (hydrogen ion concentration): pH values shall not fall outside the range of 7.0 to 9.0. When greater than 25 percent of ambient measurements taken between June and September are greater than pH 8.7, and as resources are available according to priorities set by the Department, the Department shall determine whether the values higher than 8.7 are anthropogenic or natural in origin. The following exception applies: Waters impounded by dams existing on January 1, 1996, which have pHs that exceed the criteria shall not be considered in violation of the standard if the Department determines that the exceedance would not occur without the impoundment and that all practicable measures have been taken to bring the pH in the impounded waters into compliance with the criteria;

(e) Bacteria standards:

(A) Numeric Criteria: Organisms of the coliform group commonly associated with fecal sources (MPN or equivalent membrane filtration using a representative number of samples) shall not exceed the criteria described in subparagraphs (i) and (ii) of this paragraph. Freshwaters:

(i) A 30-day log mean of 126 *E. coli* organisms per 100 ml, based on a minimum of five (5) samples;

(ii) No single sample shall exceed 406 *E. coli* organisms per 100 ml;

(B) Raw Sewage Prohibition: No sewage shall be discharged into or in any other manner be allowed to enter the waters of the State unless such sewage has been treated in a manner approved by the Department or otherwise allowed by these rules;

(C) Animal Waste: Runoff contaminated with domesticated animal wastes shall be minimized and treated to the maximum extent practicable before it is allowed to enter waters of the State;

(D) Effluent Limitations and Water Quality Limited Waterbodies: Effluent limitations to implement the criteria in this rule are found in OAR 340-41-120(12) through (16). Implementation of the criteria in this rule in water quality limited waterbodies is described in OAR 340-41-026(3)(a)(I) and OAR 340-41-120(17).

(f) Bacterial pollution or other conditions deleterious to waters used for domestic purposes, livestock watering, irrigation, bathing, or otherwise injurious to public health shall not be allowed;

(g) The liberation of dissolved gases, such as carbon dioxide, hydrogen sulfide, or other

gases, in sufficient quantities to cause objectionable odors or to be deleterious to fish or other aquatic life, navigation, recreation, or other reasonable uses made of such waters shall not be allowed;

(h) The development of fungi or other growths having a deleterious effect on stream bottoms, fish or other aquatic life, or which are injurious to health, recreation, or industry shall not be allowed;

(i) The creation of tastes or odors or toxic or other conditions that are deleterious to fish or other aquatic life or affect the potability of drinking water or the palatability of fish or shellfish shall not be allowed;

(j) The formation of appreciable bottom or sludge deposits or the formation of any organic or inorganic deposits deleterious to fish or other aquatic life or injurious to public health, recreation, or industry shall not be allowed;

(k) Objectionable discoloration, scum, oily sleek or floating solids, or coating of aquatic life with oil films shall not be allowed;

(l) Aesthetic conditions offensive to the human senses of sight, taste, smell, or touch shall not be allowed;

(m) Radioisotope concentrations shall not exceed maximum permissible concentrations (MPC's) in drinking water, edible fishes or shellfishes, wildlife, irrigated crops, livestock and dairy products, or pose an external radiation hazard;

(n) The concentration of total dissolved gas relative to atmospheric pressure at the point of sample collection shall not exceed 110 percent of saturation, except when stream flow exceeds the ten-year, seven-day average flood. However, for Hatchery receiving waters and waters of less than two feet in depth, the concentration of total dissolved gas relative to atmospheric pressure at the point of sample collection shall not exceed 105 percent of saturation;

(o) Total Dissolved Solids: Guide concentrations listed below shall not be exceeded unless otherwise specifically authorized by DEQ upon such conditions as it may deem necessary to carry out the general intent of this plan and to protect the beneficial uses set forth in OAR 340-41-802: Snake River — 750.0 mg/l.

(p) Toxic Substances:

(A) Toxic substances shall not be introduced above natural background levels in the waters of the state in amounts, concentrations, or combinations which may be harmful, may chemically change to harmful forms in the environment, or may accumulate in sediments or bioaccumulate in aquatic life or wildlife to levels that adversely affect public health, safety, or welfare; aquatic life; wildlife; or other designated beneficial uses;

(B) Levels of toxic substances shall not exceed the criteria listed in **Table 20** which were based on criteria established by EPA and published in **Quality Criteria for Water (1986)**, unless otherwise noted;

(C) The criteria in paragraph (B) of this subsection shall apply unless data from scientifically valid studies demonstrate that the most sensitive designated beneficial uses will not be adversely affected by exceeding a criterion or that a more restrictive criterion is warranted to protect beneficial uses, as accepted by the Department on a specific basis. Where no published EPA criteria exist for a toxic substance, public health advisories and other published scientific literature may be considered and used, if appropriate, to set guidance values;

(D) Bio-assessment studies such as laboratory bioassays or instream measurements of indigenous biological communities, shall be conducted, as the Department deems necessary, to monitor the toxicity of complex effluents, other suspected discharges or chemical substances

without numeric criteria, to aquatic life. These studies, properly conducted in accordance with standard testing procedures, may be considered as scientifically valid data for the purposes of paragraph (C) of this subsection. If toxicity occurs, the Department shall evaluate and implement measures necessary to reduce toxicity on a case-by-case basis.

(3) Where the naturally occurring quality parameters of waters of the Malheur River Basin are outside the numerical limits of the above assigned water quality standards, the naturally occurring water quantity shall be the standard. However, in such cases special restrictions, described in OAR 340-41-026(3)(a)(C)(iii), apply to discharges that affect dissolved oxygen.

(4) Mixing zones:

(a) The Department may allow a designated portion of a receiving water to serve as a zone of dilution for wastewaters and receiving waters to mix thoroughly and this zone will be defined as a mixing zone;

(b) The Department may suspend all or part of the water quality standards, or set less restrictive standards, in the defined mixing zone, provided that the following conditions are met:

(A) The water within the mixing zone shall be free of:

(i) Materials in concentrations that will cause acute toxicity to aquatic life as measured by a Department approved bioassay method. Acute toxicity is lethality to aquatic life as measured by a significant difference in lethal concentration between the control and 100 percent effluent in an acute bioassay test. Lethality in 100 percent effluent may be allowed due to ammonia and chlorine only when it is demonstrated on a case-by-case basis that immediate dilution of the effluent within the mixing zone reduces toxicity below lethal concentrations. The Department may on a case-by-case basis establish a zone of immediate dilution if appropriate for other parameters;

(ii) Materials that will settle to form objectionable deposits;

(iii) Floating debris, oil, scum, or other materials that cause nuisance conditions;

(iv) Substances in concentrations that produce deleterious amounts of fungal or bacterial growths.

(B) The water outside the boundary of the mixing zone shall:

(i) Be free of materials in concentrations that will cause chronic (sublethal) toxicity. Chronic toxicity is measured as the concentration that causes long-term sublethal effects, such as significantly impaired growth or reproduction in aquatic organisms, during a testing period based on test species life cycle. Procedures and end points will be specified by the Department in wastewater discharge permits;

(ii) Meet all other water quality standards under normal annual low flow conditions.

(c) The limits of the mixing zone shall be described in the wastewater discharge permit. In determining the location, surface area, and volume of a mixing zone area, the Department may use appropriate mixing zone guidelines to assess the biological, physical, and chemical character of receiving waters, and effluent, and the most appropriate placement of the outfall, to protect instream water quality, public health, and other beneficial uses. Based on receiving water and effluent characteristics, the Department shall define a mixing zone in the immediate area of a wastewater discharge to:

(A) Be as small as feasible;

(B) Avoid overlap with any other mixing zones to the extent possible and be less than the total stream width as necessary to allow passage of fish and other aquatic organisms;

(C) Minimize adverse effects on the indigenous biological community especially when species are present that warrant special protection for their economic importance, tribal

significance, ecological uniqueness, or for other similar reasons as determined by the Department and does not block the free passage of aquatic life;

(D) Not threaten public health;

(E) Minimize adverse effects on other designated beneficial uses outside the mixing zone.

(d) The Department may request the applicant of a permitted discharge for which a mixing zone is required, to submit all information necessary to define a mixing zone, such as:

(A) Type of operation to be conducted;

(B) Characteristics of effluent flow rates and composition;

(C) Characteristics of low flows of receiving waters;

(D) Description of potential environmental effects;

(E) Proposed design for outfall structures.

(e) The Department may, as necessary, require mixing zone monitoring studies and/or bioassays to be conducted to evaluate water quality or biological status within and outside the mixing zone boundary;

(f) The Department may change mixing zone limits or require the relocation of an outfall if it determines that the water quality within the mixing zone adversely affects any existing beneficial uses in the receiving waters.

(g) **Alternate requirements for mixing zones**: For some existing or proposed discharges to some receiving streams, it may not be practicable to treat wastewater to meet instream water quality standards at the point of discharge or within a short distance from the point of discharge. Some of these discharges could be allowed without impairing the overall ecological integrity of the receiving streams, or may provide an overall benefit to the receiving stream. This section specifies the conditions and circumstances under which a mixing zone may be allowed by the Department that extends beyond the immediate area around a discharge point, or that extends across a stream width. An alternate mixing zone may be approved if the applicant demonstrates to the Department's satisfaction that the discharge (A) creates an overall environmental benefit, or (B) is to a constructed water course, or (C) is insignificant. The three circumstances under which alternate mixing zones may be established are described further below.

(A) **Overall environmental benefit**.

(i) Qualifying for alternate mixing zone based on overall environmental benefit: In order to qualify for an alternate mixing zone based on a finding of overall environmental benefit, the discharger must demonstrate to the Department's satisfaction the following:

(a) That all practical strategies have been or will be implemented to minimize the pollutant loads in the effluent; and

(b) For proposed increased discharges, the current actual discharge and mixing zone does not meet the requirements of a standard mixing zone; and

(c) Either that, on balance, an environmental benefit would be lost if the discharge did not occur, or that the discharger is prepared to undertake other actions that will mitigate the effect of the discharge to an extent resulting in a net environmental benefit to the receiving stream.

(d) For the purposes of this rule, the term "practical" shall include environmental impact, availability of alternatives, cost of alternatives, and other relevant factors.

(ii) Studies required and evaluation of studies: In order to demonstrate that, on balance, an environmental benefit will result from the discharge, the following information shall be provided by the applicant:

(a) The effluent flow and pollutant loads that are detected or expected in the effluent, by

month, both average and expected worst case discharges. The parameters to be evaluated include at a minimum temperature, biochemical oxygen demand, total suspended solids, total dissolved solids, pH, settleable solids, e. coli bacteria, oil and grease, any pollutants listed in Table 20 of this rule division, and any pollutant for which the receiving stream has been designated by the Department as water quality limited; and

(b) Receiving stream flow, by month; and

(c) The expected impact of the discharge, by month, on the receiving stream for the entire proposed mixing zone area for all of the pollutants listed above. Included in this analysis shall be a comparison of the receiving stream water quality with the discharge and without the discharge; and

(d) A description of fish, other vertebrate populations, and macroinvertebrates that reside in or are likely to pass through the proposed mixing zone, including expected location (if known), species identification, stage of development, and time of year when their presence is expected. For existing discharges, the applicant shall provide the same information for similar nearby streams that are unaffected by wastewater discharges. In addition, any threatened or endangered species in the immediate vicinity of the receiving stream shall be identified; and

(e) The expected impact of the discharge on aquatic organisms and/or fish passage, including any expected negative impacts from the effluent attracting fish where that is not desirable; and

(f) A description of the expected environmental benefits to be derived from the discharge or other mitigation measures proposed by the applicant, including but not limited to improvements in water quality, improvements in fish passage, and improvements in aquatic habitat. If the applicant proposes to undertake mitigation measures designed to provide environmental benefits (e.g., purchasing water or water conservation rights to increase stream flows or establishing stream cover to decrease temperature), the applicant shall describe the mitigation measures in detail, including a description of the steps it will take to ensure that the benefits of the mitigation measures are attained and are not lost or diminished over time.

(g) Some or all of the above study requirements may be waived by the Department, if the Department determines that the information is not needed. In the event that the Department does waive some or all of the above study requirements, the basis for waiving the requirements will be included in the permit evaluation report upon the next permit renewal or modification relating to the mixing zone.

(h) Upon request of the Department, the applicant shall conduct additional studies to further evaluate the impact of the discharge, which may include whole effluent toxicity testing, stream surveys for water quality, stream surveys for fish and other aquatic organisms, or other studies as specified by the Department.

(i) In evaluating whether an existing or proposed increase in an existing discharge would result in a net environmental benefit, the applicant shall use the native biological community in a nearby, similar stream that is unaffected by wastewater discharges. The Department shall consider all information generated as required in this rule and other relevant information. The evaluation shall consider benefits to the native aquatic biological community only.

(iii) Permit conditions: Upon determination by the Department that the discharge and mitigation measures (if any) will likely result in an overall environmental benefit, the Department shall include appropriate permit conditions to insure that the environmental benefits are attained and continue. Such permit conditions may include but not be limited to:

(a) Maximum allowed effluent flows and pollutant loads;

(b) Requirements to maintain land ownership, easements, contracts, or other legally binding measures necessary to assure that mitigation measures, if any, remain in place and effective;

(c) Special operating conditions;

(d) Monitoring and reporting requirements; and

(e) Studies to evaluate the effectiveness of mitigation measures.

(B) **Constructed water course**: A mixing zone may be extended through a constructed water course and into a natural water course. For the purposes of this rule, a constructed water course is one that was constructed for irrigation, site drainage, or wastewater conveyance, and has the following characteristics:

(i) Irrigation flows, stormwater runoff, or wastewater flows have replaced natural streamflow regimes; and

(ii) The channel form is greatly simplified in lengthwise and cross sectional profiles; and

(iii) Physical and biological characteristics that differ significantly from nearby natural streams; and

(iv) A much lower diversity of aquatic species than found in nearby natural streams; and

(v) If the constructed water course is an irrigation canal, then it must have effective fish screens in place to qualify as a constructed water course.

(C) **Insignificant discharges**: Insignificant discharges are those that either by volume, pollutant characteristics, and/or temporary nature are expected to have little if any impact on beneficial uses in the receiving stream, and for which the extensive evaluations required for discharges to smaller streams are not warranted. For the purposes of this rule, only filter backwash discharges and underground storage tank cleanups are considered insignificant discharges.

(D) **Other requirements for alternate mixing zones**: The following are additional requirements for dischargers requesting an alternate mixing zone:

(i) Most discharges that qualify for an alternate mixing zone will extend through the receiving stream until a larger stream is reached, where thorough mixing of the effluent can occur and where the edge of the allowed mixing zone will be located. The portion of the mixing zone in the larger stream must meet all of the requirements of the standard mixing zone, including not blocking aquatic life passage; and

(ii) An alternate mixing zone shall not be granted if a municipal drinking water intake is located within the proposed mixing zone, and the discharge has a significant adverse impact on the drinking water source; and

(iii) The discharge will not pose an unreasonable hazard to the environment or pose a significant health risk, considering the likely pathways of exposure; and

(iv) The discharge shall not be acutely toxic to organisms passing through the mixing zone; and

(v) An alternate mixing zone shall not be granted if the substances discharged may accumulate in the sediments or bioaccumulate in aquatic life or wildlife to levels that adversely affect public health, safety, or welfare; aquatic life; wildlife; or other designated beneficial uses; and

(vi) In the event that the receiving stream is water quality limited, the requirements for discharges to water quality limited streams supersede this rule.

(5) Testing methods: The analytical testing methods for determining compliance with the water quality standards contained in this rule shall be in accordance with the most recent edition

of **Standard Methods for the Examination of Water and Waste Water published jointly by the American Public Health Association, American Water Works Association, and Water Pollution Control Federation**, unless the Department has published an applicable superseding method, in which case testing shall be in accordance with the superseding method; provided, however, that testing in accordance with an alternative method shall comply with this rule if the Department has published the method or has approved the method in writing.

[**Publications:** The publication(s) referred to or incorporated by reference in this rule are available from the office of the Department of Environmental Quality.]

Stat. Auth.: ORS 468B.035 & 468.735; ORS 468B.048
Stat. Implemented: ORS 468B.048
Hist.: DEQ 128, f. & ef. 1-21-77; DEQ 1-1980, f. & ef. 1-9-80; DEQ 18-1987, f. & ef. 9-4-87; DEQ 14-1991, f. & cert. ef. 8-13-91; DEQ 17-1992, f. & cert. ef. 8-7-92 (and corrected 8-13-92)

Minimum Design Criteria for Treatment Control of Wastes

340-41-815 Subject to the implementation program set forth in OAR 340-41-120, prior to discharge of any wastes from any new or modified facility to any waters of the Malheur River Basin, such wastes shall be treated and controlled in facilities designed in accordance with the following minimum criteria. (In designing treatment facilities, average conditions and a normal range of variability are generally used in establishing design criteria. A facility once completed and placed in operation should operate at or near the design limit most of the time but may operate below the design criteria limit at times due to variables which are unpredictable or uncontrollable. This is particularly true for biological treatment facilities. The actual operating limits are intended to be established by permit pursuant to ORS 468.740 and recognize that the actual performance level may at times be less than the design criteria.):

(1) Sewage wastes:

(a) During summer periods (approximately May 1 to October 31): Treatment resulting in monthly average effluent concentrations not to exceed 20 mg/l of BOD and 20 mg/l of SS or equivalent control;

(b) During winter periods (approximately November 1 to April 30): A minimum of Secondary Treatment or equivalent control and unless other-wise specifically authorized by the Department, operation of all waste treatment and control facilities at maximum practicable efficiency and effectiveness so as to minimize waste discharges to public waters;

(c) Effluent BOD concentrations in mg/l, divided by the dilution factor (ratio of receiving stream flow to effluent flow) shall not exceed one unless otherwise approved by the EQC;

(d) Sewage wastes shall be disinfected, after treatment, equivalent to thorough mixing with sufficient chlorine to provide a residual of at least one part per million after 60 minutes of contact time unless otherwise specifically authorized by permit;

(e) Positive protection shall be provided to prevent bypassing raw or inadequately treated sewage to public waters unless otherwise approved by the Department where elimination of inflow and infiltration would be necessary but not presently practicable;

(f) More stringent waste treatment and control requirements may be imposed where special conditions may require.

(2) Industrial wastes:

(a) After maximum practicable inplant control, a minimum of secondary treatment or

equivalent control, (reduction of suspended solids and organic material where present in significant quantities, effective disinfection where bacterial organisms of public health significance are present, and control of toxic or other deleterious substances);

(b) Specific industrial waste treatment requirements shall be determined on an individual basis in accordance with the provisions of this plan, applicable federal requirements and the following:

(A) The uses which are or may likely be made of the receiving stream;

(B) The size and nature of flow of the receiving stream;

(C) The quantity and quality of wastes to be treated; and

(D) The presence or absence of other sources of pollution on the same watershed.

(c) Where industrial, commercial, or agricul-tural effluents contain significant quantities of potentially toxic elements, treatment requirements shall be determined utilizing appropriate bioassays;

(d) Industrial cooling waters containing significant heat loads shall be subjected to offstream cooling or heat recovery prior to discharge to public waters;

(e) Positive protection shall be provided to prevent bypassing of raw or inadequately treated industrial wastes to any public waters;

(f) Facilities shall be provided to prevent and contain spills of potentially toxic or hazardous materials and a positive program for containment and cleanup of such spills, should they occur, shall be developed and maintained.

Stat. Auth.: ORS Ch. 468
Hist.: DEQ 128, f. & ef. 1-21-77

Owyhee Basin

Beneficial Water Uses to be Protected

340-41-842 Water quality in the Owyhee River Basin (see **Figures 1** and **17**) shall be managed to protect the recognized beneficial uses as indicated in **Table 16**.

Stat. Auth.: ORS Ch. 468
Hist.: DEQ 128, f. & ef. 1-27-77; DEQ 9-1985, f. & ef. 8-6-85

Water Quality Standards Not to be Exceeded (To be Adopted Pursuant to ORS 468.735 and Enforceable Pursuant to ORS 468.720, 468. 990, and 468.992)

340-41-845 (1) Notwithstanding the water quality standards contained below, the highest and best practicable treatment and/or control of wastes, activities, and flows shall in every case be provided so as to maintain dissolved oxygen and overall water quality at the highest possible levels and water temperatures, coliform bacteria concentrations, dissolved chemical substances, toxic materials, radioactivity, turbidities, color, odor, and other deleterious factors at the lowest possible levels.

(2) No wastes shall be discharged and no activities shall be conducted which either alone or in combination with other wastes or activities will cause violation of the following standards in the waters of the Owyhee River Basin:

(a) Dissolved oxygen (DO): The changes adopted by the Commission on January 11, 1996, become effective July 1, 1996. Until that time, the requirements of this rule that were in effect on January 10, 1996, apply:

(A) For waterbodies identified by the Department as providing salmonid spawning, during the periods from spawning until fry emergence from the gravels, the following criteria apply:

(i) The dissolved oxygen shall not be less than 11.0 mg/l. However, if the minimum intergravel dissolved oxygen, measured as a spatial median, is 8.0 mg/l or greater, then the DO criterion is 9.0 mg/l;

(ii) Where conditions of barometric pressure, altitude, and temperature preclude attainment of the 11.0 mg/l or 9.0 mg/l criteria, dissolved oxygen levels shall not be less than 95 percent of saturation.

(B) For waterbodies identified by the Department as providing salmonid spawning during the period from spawning until fry emergence from the gravels, the spatial median intergravel dissolved oxygen concentration shall not fall below 6.0 mg/l;

(C) A spatial median of 8.0 mg/l intergravel dissolved oxygen level shall be used to identify areas where the recognized beneficial use of salmonid spawning, egg incubation and fry emergence from the egg and from the gravels may be impaired and therefore require action by the Department. Upon determination that the spatial median intergravel dissolved oxygen concentration is below 8.0 mg/l, the Department may, in accordance with priorities established by the Department for evaluating water quality impaired waterbodies, determine whether to list the waterbody as water quality limited under the Section 303(d) of the Clean Water Act, initiate pollution control strategies as warranted, and where needed cooperate with appropriate designated management agencies to evaluate and implement necessary best management practices for nonpoint source pollution control;

(D) For waterbodies identified by the Department as providing cold-water aquatic life, the dissolved oxygen shall not be less than 8.0 mg/l as an absolute minimum. Where conditions of barometric pressure, altitude, and temperature preclude attainment of the 8.0 mg/l, dissolved oxygen shall not be less than 90 percent of saturation. At the discretion of the Department, when the Department determines that adequate information exists, the dissolved oxygen shall not fall below 8.0 mg/l as a 30-day mean minimum, 6.5 mg/l as a seven-day minimum mean, and shall not fall below 6.0 mg/l as an absolute minimum **(Table 21)**;

(E) For waterbodies identified by the Department as providing cool-water aquatic life, the dissolved oxygen shall not be less than 6.5 mg/l as an absolute minimum. At the discretion of the Department, when the Department determines that adequate information exists, the dissolved oxygen shall not fall below 6.5 mg/l as a 30-day mean minimum, 5.0 mg/l as a seven-day minimum mean, and shall not fall below 4.0 mg/l as an absolute minimum **(Table 21)**;

(F) For waterbodies identified by the Department as providing warm-water aquatic life, the dissolved oxygen shall not be less than 5.5 mg/l as an absolute minimum. At the discretion of the Department, when the Department determines that adequate information exists, the dissolved oxygen shall not fall below 5.5 mg/l as a 30-day mean minimum, and shall not fall below 4.0 mg/l as an absolute minimum **(Table 21)**;

(b) Temperature: The changes adopted by the Commission on January 11, 1996, become effective July 1, 1996. Until that time, the requirements of this rule that were in effect on January 10, 1996, apply. The method for measuring the numeric temperature criteria specified in this rule is defined in OAR 340-41-006(54):

(A) To accomplish the goals identified in OAR 340-41-120(11), unless specifically allowed under a Department-approved surface water temperature management plan as required under OAR 340-41-026(3)(a)(D), no measurable surface water temperature increase resulting

from anthropogenic activities is allowed:

(i) In a basin for which salmonid fish rearing is a designated beneficial use, and in which surface water temperatures exceed 64.0°F (17.8°C);

(ii) In waters and periods of the year determined by the Department to support native salmonid spawning, egg incubation, and fry emergence from the egg and from the gravels in a basin which exceeds 55.0°F (12.8°C);

(iii) In waters determined by the Department to support or to be necessary to maintain the viability of native Oregon bull trout, when surface water temperatures exceed 50.0°F (10.0°C);

(iv) In waters determined by the Department to be ecologically significant cold-water refugia;

(v) In stream segments containing federally listed Threatened and Endangered species if the increase would impair the biological integrity of the Threatened and Endangered population;

(vi) In Oregon waters when the dissolved oxygen (DO) levels are within 0.5 mg/l or 10 percent saturation of the water column or intergravel DO criterion for a given stream reach or subbasin;

(vii) In natural lakes.

(B) An exceedance of the numeric criteria identified in subparagraphs (A)(i) through (iii) of this subsection will not be deemed a temperature standard violation if it occurs when the air temperature during the warmest seven-day period of the year exceeds the 90th percentile of the seven-day average daily maximum air temperature calculated in a yearly series over the historic record. However, during such periods, the anthropogenic sources must still continue to comply with their surface water temperature management plans developed under OAR 340-41-026(3)(a)(D);

(C) Any source may petition the Commission for an exception to subparagraphs (A)(i) through (vii) of this subsection for discharge above the identified criteria if:

(i) The source provides the necessary scientific information to describe how the designated beneficial uses would not be adversely impacted; or

(ii) A source is implementing all reasonable management practices or measures; its activity will not significantly affect the beneficial uses; and the environmental cost of treating the parameter to the level necessary to assure full protection would outweigh the risk to the resource.

(c) Turbidity (Nephelometric Turbidity Units, NTU): No more than a ten percent cumulative increase in natural stream turbidities shall be allowed, as measured relative to a control point immediately upstream of the turbidity causing activity. However, limited duration activities necessary to address an emergency or to accommodate essential dredging, construction or other legitimate activities and which cause the standard to be exceeded may be authorized provided all practicable turbidity control techniques have been applied and one of the following has been granted:

(A) Emergency activities: Approval coordinated by DEQ with the Department of Fish and Wildlife under conditions they may prescribe to accommodate response to emergencies or to protect public health and welfare;

(B) Dredging, Construction or other Legitimate Activities: Permit certification authorized under terms of Section 401 or 404 (Permits and Licenses, Federal Water Pollution Control Act) or OAR 141-85-100 et seq. (Removal and Fill Permits, Division of State Lands), with limitations and conditions governing the activity set forth in the permit or certificate.

(d) pH (hydrogen ion concentration): pH values shall not fall outside the range of 7.0 to 9.0. When greater than 25 percent of ambient measurements taken between June and September

are greater than pH 8.7, and as resources are available according to priorities set by the Department, the Department shall determine whether the values higher than 8.7 are anthropogenic or natural in origin. The following exception applies: Waters impounded by dams existing on January 1, 1996, which have pHs that exceed the criteria shall not be considered in violation of the standard if the Department determines that the exceedance would not occur without the impoundment and that all practicable measures have been taken to bring the pH in the impounded waters into compliance with the criteria;

(e) Bacteria standards:

(A) Numeric Criteria: Organisms of the coliform group commonly associated with fecal sources (MPN or equivalent membrane filtration using a representative number of samples) shall not exceed the criteria described in subparagraphs (i) and (ii) of this paragraph. Freshwaters:

(i) A 30-day log mean of 126 *E. coli* organisms per 100 ml, based on a minimum of five (5) samples;

(ii) No single sample shall exceed 406 *E. coli* organisms per 100 ml;

(B) Raw Sewage Prohibition: No sewage shall be discharged into or in any other manner be allowed to enter the waters of the State unless such sewage has been treated in a manner approved by the Department or otherwise allowed by these rules;

(C) Animal Waste: Runoff contaminated with domesticated animal wastes shall be minimized and treated to the maximum extent practicable before it is allowed to enter waters of the State;

(D) Effluent Limitations and Water Quality Limited Waterbodies: Effluent limitations to implement the criteria in this rule are found in OAR 340-41-120(12) through (16). Implementation of the criteria in this rule in water quality limited waterbodies is described in OAR 340-41-026(3)(a)(I) and OAR 340-41-120(17).

(f) Bacterial pollution or other conditions deleterious to waters used for domestic purposes, livestock watering, irrigation, or bathing, or otherwise injurious to public health shall not be allowed;

(g) The liberation of dissolved gases, such as carbon dioxide, hydrogen sulfide, or other gases, in sufficient quantities to cause objectionable odors or to be deleterious to fish or other aquatic life, navigation, recreation, or other reasonable uses made of such waters shall not be allowed;

(h) The development of fungi or other growths having a deleterious effect on stream bottoms, fish or other aquatic life, or which are injurious to health, recreation, or industry shall not be allowed;

(i) The creation of tastes or odors or toxic or other conditions that are deleterious to fish or other aquatic life or affect the potability of drinking water or the palatability of fish shall not be allowed;

(j) The formation of appreciable bottom or sludge deposits or the formation of any organic or inorganic deposits deleterious to fish or other aquatic life or injurious to public health, recreation, or industry shall not be allowed;

(k) Objectionable discoloration, scum, oily sleek or floating solids, or coating of aquatic life with oil films shall not be allowed;

(l) Aesthetic conditions offensive to the human senses of sight, taste, smell, or touch shall not be allowed;

(m) Radioisotope concentrations shall not exceed maximum permissible concentrations (MPC's) in drinking water, edible fishes, wildlife, irrigated crops, livestock and dairy products,

or pose an external radiation hazard;

(n) The concentration of total dissolved gas relative to atmospheric pressure at the point of sample collection shall not exceed 110 percent of saturation, except when stream flow exceeds the ten-year, seven-day average flood. However, for Hatchery receiving waters and waters of less than two feet in depth, the concentration of total dissolved gas relative to atmospheric pressure at the point of sample collection shall not exceed 105 percent of saturation;

(o) Total Dissolved Solids: Guide concentrations listed below shall not be exceeded unless otherwise specifically authorized by DEQ upon such conditions as it may deem necessary to carry out the general intent of this plan and to protect the beneficial uses set forth in OAR 340-41-842: Snake River — 750.0 mg/l;

(p) Toxic Substances:

(A) Toxic substances shall not be introduced above natural background levels in the waters of the state in amounts, concentrations, or combinations which may be harmful, may chemically change to harmful forms in the environment, or may accumulate in sediments or bioaccumulate in aquatic life or wildlife to levels that adversely affect public health, safety, or welfare; aquatic life; wildlife; or other designated beneficial uses;

(B) Levels of toxic substances shall not exceed the criteria listed in **Table 20** which were based on criteria established by EPA and published in **Quality Criteria for Water (1986)**, unless otherwise noted;

(C) The criteria in paragraph (B) of this subsection shall apply unless data from scientifically valid studies demonstrate that the most sensitive designated beneficial uses will not be adversely affected by exceeding a criterion or that a more restrictive criterion is warranted to protect beneficial uses, as accepted by the Department on a site specific basis. Where no published EPA criteria exist for a toxic substance, public health advisories and other published scientific literature may be considered and used, if appropriate, to set guidance values;

(D) Bio-assessment studies such as laboratory bioassays or instream measurements of indigenous biological communities, shall be conducted, as the Department deems necessary, to monitor the toxicity of complex effluents, other suspected discharges or chemical substances without numeric criteria, to aquatic life. These studies, properly conducted in accordance with standard testing procedures, may be considered as scientifically valid data for the purposes of paragraph (C) of this subsection. If toxicity occurs, the Department shall evaluate and implement measures necessary to reduce toxicity on a case-by-case basis.

(3) Where the naturally occurring quality parameters of waters of the Owyhee River Basin are outside the numerical limits of the above assigned water quality standards, the naturally occurring water quantity shall be the standard. However, in such cases special restrictions, described in OAR 340-41-026(3)(a)(C)(iii), apply to discharges that affect dissolved oxygen.

(4) Mixing zones:

(a) The Department may allow a designated portion of a receiving water to serve as a zone of dilution for wastewaters and receiving waters to mix thoroughly and this zone will be defined as a mixing zone;

(b) The Department may suspend all or part of the water quality standards, or set less restrictive standards, in the defined mixing zone, provided that the following conditions are met:

(A) The water within the mixing zone shall be free of:

(i) Materials in concentrations that will cause acute toxicity to aquatic life as measured by a Department approved bioassay method. Acute toxicity is lethality to aquatic life as measured by a significant difference in lethal concentration between the control and 100 percent effluent in

an acute bioassay test. Lethality in 100 percent effluent may be allowed due to ammonia and chlorine only when it is demonstrated on a case-by-case basis that immediate dilution of the effluent within the mixing zone reduces toxicity below lethal concentrations. The Department may on a case-by-case basis establish a zone of immediate dilution if appropriate for other parameters;

(ii) Materials that will settle to form objectionable deposits;

(iii) Floating debris, oil, scum, or other materials that cause nuisance conditions;

(iv) Substances in concentrations that produce deleterious amounts of fungal or bacterial growths.

(B) The water outside the boundary of the mixing zone shall:

(i) Be free of materials in concentrations that will cause chronic (sublethal) toxicity. Chronic toxicity is measured as the concentration that causes long-term sublethal effects, such as significantly impaired growth or reproduction in aquatic organisms, during a testing period based on test species life cycle. Procedures and end points will be specified by the Department in wastewater discharge permits.

(ii) Meet all other water quality standards under normal annual low flow conditions.

(c) The limits of the mixing zone shall be described in the wastewater discharge permit. In determining the location, surface area, and volume of a mixing zone area, the Department may use appropriate mixing zone guidelines to assess the biological, physical, and chemical character of receiving waters, and effluent, and the most appropriate placement of the outfall, to protect instream water quality, public health, and other beneficial uses. Based on receiving water and effluent characteristics, the Department shall define a mixing zone in the immediate area of a wastewater discharge to:

(A) Be as small as feasible;

(B) Avoid overlap with any other mixing zones to the extent possible and be less than the total stream width as necessary to allow passage of fish and other aquatic organisms;

(C) Minimize adverse effects on the indigenous biological community especially when species are present that warrant special protection for their economic importance, tribal significance, ecological uniqueness, or for other similar reasons as determined by the Department and does not block the free passage of aquatic life;

(D) Not threaten public health;

(E) Minimize adverse effects on other designated beneficial uses outside the mixing zone.

(d) The Department may request the applicant of a permitted discharge for which a mixing zone is required, to submit all information necessary to define a mixing zone, such as:

(A) Type of operation to be conducted;

(B) Characteristics of effluent flow rates and composition;

(C) Characteristics of low flows of receiving waters;

(D) Description of potential environmental effects;

(E) Proposed design for outfall structures.

(e) The Department may, as necessary, require mixing zone monitoring studies and/or bioassays to be conducted to evaluate water quality or biological status within and outside the mixing zone boundary;

(f) The Department may change mixing zone limits or require the relocation of an outfall if it determines that the water quality within the mixing zone adversely affects any existing beneficial uses in the receiving waters.

(g) **Alternate requirements for mixing zones**: For some existing or proposed

discharges to some receiving streams, it may not be practicable to treat wastewater to meet instream water quality standards at the point of discharge or within a short distance from the point of discharge. Some of these discharges could be allowed without impairing the overall ecological integrity of the receiving streams, or may provide an overall benefit to the receiving stream. This section specifies the conditions and circumstances under which a mixing zone may be allowed by the Department that extends beyond the immediate area around a discharge point, or that extends across a stream width. An alternate mixing zone may be approved if the applicant demonstrates to the Department's satisfaction that the discharge (A) creates an overall environmental benefit, or (B) is to a constructed water course, or (C) is insignificant. The three circumstances under which alternate mixing zones may be established are described further below.

(A) **Overall environmental benefit.**

(i) Qualifying for alternate mixing zone based on overall environmental benefit: In order to qualify for an alternate mixing zone based on a finding of overall environmental benefit, the discharger must demonstrate to the Department's satisfaction the following:

(a) That all practical strategies have been or will be implemented to minimize the pollutant loads in the effluent; and

(b) For proposed increased discharges, the current actual discharge and mixing zone does not meet the requirements of a standard mixing zone; and

(c) Either that, on balance, an environmental benefit would be lost if the discharge did not occur, or that the discharger is prepared to undertake other actions that will mitigate the effect of the discharge to an extent resulting in a net environmental benefit to the receiving stream.

(d) For the purposes of this rule, the term "practical" shall include environmental impact, availability of alternatives, cost of alternatives, and other relevant factors.

(ii) Studies required and evaluation of studies: In order to demonstrate that, on balance, an environmental benefit will result from the discharge, the following information shall be provided by the applicant:

(a) The effluent flow and pollutant loads that are detected or expected in the effluent, by month, both average and expected worst case discharges. The parameters to be evaluated include at a minimum temperature, biochemical oxygen demand, total suspended solids, total dissolved solids, pH, settleable solids, e. coli bacteria, oil and grease, any pollutants listed in Table 20 of this rule division, and any pollutant for which the receiving stream has been designated by the Department as water quality limited; and

(b) Receiving stream flow, by month; and

(c) The expected impact of the discharge, by month, on the receiving stream for the entire proposed mixing zone area for all of the pollutants listed above. Included in this analysis shall be a comparison of the receiving stream water quality with the discharge and without the discharge; and

(d) A description of fish, other vertebrate populations, and macroinvertebrates that reside in or are likely to pass through the proposed mixing zone, including expected location (if known), species identification, stage of development, and time of year when their presence is expected. For existing discharges, the applicant shall provide the same information for similar nearby streams that are unaffected by wastewater discharges. In addition, any threatened or endangered species in the immediate vicinity of the receiving stream shall be identified; and

(e) The expected impact of the discharge on aquatic organisms and/or fish passage, including any expected negative impacts from the effluent attracting fish where that is not

desirable; and

(f) A description of the expected environmental benefits to be derived from the discharge or other mitigation measures proposed by the applicant, including but not limited to improvements in water quality, improvements in fish passage, and improvements in aquatic habitat. If the applicant proposes to undertake mitigation measures designed to provide environmental benefits (e.g., purchasing water or water conservation rights to increase stream flows or establishing stream cover to decrease temperature), the applicant shall describe the mitigation measures in detail, including a description of the steps it will take to ensure that the benefits of the mitigation measures are attained and are not lost or diminished over time.

(g) Some or all of the above study requirements may be waived by the Department, if the Department determines that the information is not needed. In the event that the Department does waive some or all of the above study requirements, the basis for waiving the requirements will be included in the permit evaluation report upon the next permit renewal or modification relating to the mixing zone.

(h) Upon request of the Department, the applicant shall conduct additional studies to further evaluate the impact of the discharge, which may include whole effluent toxicity testing, stream surveys for water quality, stream surveys for fish and other aquatic organisms, or other studies as specified by the Department.

(i) In evaluating whether an existing or proposed increase in an existing discharge would result in a net environmental benefit, the applicant shall use the native biological community in a nearby, similar stream that is unaffected by wastewater discharges. The Department shall consider all information generated as required in this rule and other relevant information. The evaluation shall consider benefits to the native aquatic biological community only.

(iii) Permit conditions: Upon determination by the Department that the discharge and mitigation measures (if any) will likely result in an overall environmental benefit, the Department shall include appropriate permit conditions to insure that the environmental benefits are attained and continue. Such permit conditions may include but not be limited to:

(a) Maximum allowed effluent flows and pollutant loads;

(b) Requirements to maintain land ownership, easements, contracts, or other legally binding measures necessary to assure that mitigation measures, if any, remain in place and effective;

(c) Special operating conditions;

(d) Monitoring and reporting requirements; and

(e) Studies to evaluate the effectiveness of mitigation measures.

(B) **Constructed water course**: A mixing zone may be extended through a constructed water course and into a natural water course. For the purposes of this rule, a constructed water course is one that was constructed for irrigation, site drainage, or wastewater conveyance, and has the following characteristics:

(i) Irrigation flows, stormwater runoff, or wastewater flows have replaced natural streamflow regimes; and

(ii) The channel form is greatly simplified in lengthwise and cross sectional profiles; and

(iii) Physical and biological characteristics that differ significantly from nearby natural streams; and

(iv) A much lower diversity of aquatic species than found in nearby natural streams; and

(v) If the constructed water course is an irrigation canal, then it must have effective fish screens in place to qualify as a constructed water course.

(C) **Insignificant discharges**: Insignificant discharges are those that either by volume, pollutant characteristics, and/or temporary nature are expected to have little if any impact on beneficial uses in the receiving stream, and for which the extensive evaluations required for discharges to smaller streams are not warranted. For the purposes of this rule, only filter backwash discharges and underground storage tank cleanups are considered insignificant discharges.

(D) **Other requirements for alternate mixing zones**: The following are additional requirements for dischargers requesting an alternate mixing zone:

(i) Most discharges that qualify for an alternate mixing zone will extend through the receiving stream until a larger stream is reached, where thorough mixing of the effluent can occur and where the edge of the allowed mixing zone will be located. The portion of the mixing zone in the larger stream must meet all of the requirements of the standard mixing zone, including not blocking aquatic life passage; and

(ii) An alternate mixing zone shall not be granted if a municipal drinking water intake is located within the proposed mixing zone, and the discharge has a significant adverse impact on the drinking water source; and

(iii) The discharge will not pose an unreasonable hazard to the environment or pose a significant health risk, considering the likely pathways of exposure; and

(iv) The discharge shall not be acutely toxic to organisms passing through the mixing zone; and

(v) An alternate mixing zone shall not be granted if the substances discharged may accumulate in the sediments or bioaccumulate in aquatic life or wildlife to levels that adversely affect public health, safety, or welfare; aquatic life; wildlife; or other designated beneficial uses; and

(vi) In the event that the receiving stream is water quality limited, the requirements for discharges to water quality limited streams supersede this rule.

(5) Testing methods: The analytical testing methods for determining compliance with the water quality standards contained in this rule shall be in accordance with the most recent edition of **Standard Methods for the Examination of Water and Waste Water published jointly by the American Public Health Association, American Water Works Association, and Water Pollution Control Federation,** unless the Department has published an applicable superseding method, in which case testing shall be in accordance with the superseding method; provided, however, that testing in accordance with an alternative method shall comply with this rule if the Department has published the method or has approved the method in writing.

[**Publications:** The publication(s) referred to or incorporated by reference in this rule are available from the office of the Department of Environmental Quality.]

Stat. Auth.: ORS 468B.035 & 468.735; ORS 468B.048
Stat. Implemented: ORS 468B.048
Hist.: DEQ 128, f. & ef. 1-21-77; DEQ 1-1980, f. & ef. 1-9-80; DEQ 18-1987, f. & ef. 9-4-87; DEQ 14-1991, f. & cert. ef. 8-13-91; DEQ 17-1992, f. & cert. ef. 8-7-92 (and corrected 8-13-92)

Minimum Design Criteria for Treatment and Control of Wastes

340-41-855 Subject to the implementation program set forth in OAR 340-41-120, prior to discharge of any wastes from any new or modified facility to any waters of the Owyhee River

Basin, such wastes shall be treated and controlled in facilities designed in accordance with the following minimum criteria. (In designing treatment facilities, average conditions and a normal range of variability are generally used in establishing design criteria. A facility once completed and placed in operation should operate at or near the design limit most of the time but may operate below the design criteria for biological treatment facilities. The actual operating limits are intended to be established by permit pursuant to ORS 468.740 and recognize that the actual performance level may at times, be less than the design criteria.):

(1) Sewage wastes:

(a) A minimum of secondary treatment or equivalent control and unless otherwise specifically authorized by the Department, operation of all waste treatment and control facilities at maximum practicable efficiency and effectiveness so as to minimize waste discharges to public waters;

(b) Effluent BOD concentrations in mg/l, divided by the dilution factor (ratio of receiving stream flow to effluent flow) shall not exceed one unless otherwise approved by the EQC;

(c) Sewage wastes shall be disinfected, after treatment, equivalent to thorough mixing with sufficient chlorine to provide a residual of at least 1 part per million after 60 minutes of contact time unless otherwise specifically authorized by permit;

(d) Positive protection shall be provided to prevent bypassing raw or inadequately treated sewage to public waters unless otherwise approved by the Department where elimination of inflow and infiltration would be necessary but not presently practicable;

(e) More stringent waste treatment and control requirements may be imposed where special conditions may require.

(2) Industrial wastes:

(a) After maximum practicable inplant control, a minimum of secondary treatment or equivalent control (reduction of suspended solids and organic material where present in significant quantities, effective disinfection where bacterial organisms of public health significance are present, and control of toxic or other deleterious substances);

(b) Specific industrial waste treatment requirements shall be determined on an individual basis in accordance with the provisions of this plan, applicable federal requirements and the following:

(A) The uses which are or may likely be made of the receiving stream;

(B) The size and nature of flow of the receiving stream;

(C) The quantity and quality of wastes to be treated; and

(D) The presence or absence of other sources of pollution on the same watershed.

(c) Where industrial, commercial, or agricul-tural effluents contain significant quantities of potentially toxic elements, treatment requirements shall be determined utilizing appropriate bioassays;

(d) Industrial cooling waters containing significant heat loads shall be subjected to offstream cooling or heat recovery prior to discharge to public waters;

(e) Positive protection shall be provided to prevent bypassing of raw or inadequately treated industrial wastes to any public waters;

(f) Facilities shall be provided to prevent and contain spills of potentially toxic or hazardous material and a positive program for containment and cleanup of such spills should they occur shall be developed and maintained.

Stat. Auth.: ORS Ch. 468

Hist.: DEQ 128, f. & ef. 1-21-77

Malheur Lake Basin

Beneficial Water Uses to be Protected

340-41-882 Water quality in the Malheur Lake Basin (see **Figures 1** and **18**) shall be managed to protect the recognized beneficial uses as indicated in **Table 17**.

Stat. Auth.: ORS Ch. 468
Hist.: DEQ 128, f. & ef. 1-21-77; DEQ 9-1985, f. & ef. 8-6-85

Water Quality Standards Not to be Exceeded (To be Adopted Pursuant to ORS 468.735 and Enforceable Pursuant to ORS 468.720, 468.990 and 468.992)

340-41-885 (1) Notwithstanding the water quality standards contained below, the highest and best practicable treatment and/or control of wastes, activities, and flows shall in every case be provided so as to maintain dissolved oxygen and overall water quality at the highest possible levels and water temperatures, coliform bacteria concentrations, dissolved chemical substances, toxic materials, radioactivity, turbidities, color, odor, and other deleterious factors at the lowest possible levels.

(2) No wastes shall be discharged and no activities shall be conducted which either alone or in combination with other wastes or activities will cause violation of the following standards in the waters of the Malheur Lake Basin:

(a) Dissolved oxygen (DO): The changes adopted by the Commission on January 11, 1996, become effective July 1, 1996. Until that time, the requirements of this rule that were in effect on January 10, 1996, apply:

(A) For waterbodies identified by the Department as providing salmonid spawning, during the periods from spawning until fry emergence from the gravels, the following criteria apply:

(i) The dissolved oxygen shall not be less than 11.0 mg/l. However, if the minimum intergravel dissolved oxygen, measured as a spatial median, is 8.0 mg/l or greater, then the DO criterion is 9.0 mg/l;

(ii) Where conditions of barometric pressure, altitude, and temperature preclude attainment of the 11.0 mg/l or 9.0 mg/l criteria, dissolved oxygen levels shall not be less than 95 percent of saturation.

(B) For waterbodies identified by the Department as providing salmonid spawning during the period from spawning until fry emergence from the gravels, the spatial median intergravel dissolved oxygen concentration shall not fall below 6.0 mg/l;

(C) A spatial median of 8.0 mg/l intergravel dissolved oxygen level shall be used to identify areas where the recognized beneficial use of salmonid spawning, egg incubation and fry emergence from the egg and from the gravels may be impaired and therefore require action by the Department. Upon determination that the spatial median intergravel dissolved oxygen concentration is below 8.0 mg/l, the Department may, in accordance with priorities established by the Department for evaluating water quality impaired waterbodies, determine whether to list the waterbody as water quality limited under the Section 303(d) of the Clean Water Act, initiate pollution control strategies as warranted, and where needed cooperate with appropriate designated management agencies to evaluate and implement necessary best management practices for nonpoint source pollution control;

(D) For waterbodies identified by the Department as providing cold-water aquatic life, the dissolved oxygen shall not be less than 8.0 mg/l as an absolute minimum. Where conditions of barometric pressure, altitude, and temperature preclude attainment of the 8.0 mg/l, dissolved oxygen shall not be less than 90 percent of saturation. At the discretion of the Department, when the Department determines that adequate information exists, the dissolved oxygen shall not fall below 8.0 mg/l as a 30-day mean minimum, 6.5 mg/l as a seven-day minimum mean, and shall not fall below 6.0 mg/l as an absolute minimum (**Table 21**);

(E) For waterbodies identified by the Department as providing cool-water aquatic life, the dissolved oxygen shall not be less than 6.5 mg/l as an absolute minimum. At the discretion of the Department, when the Department determines that adequate information exists, the dissolved oxygen shall not fall below 6.5 mg/l as a 30-day mean minimum, 5.0 mg/l as a seven-day minimum mean, and shall not fall below 4.0 mg/l as an absolute minimum (**Table 21**);

(F) For waterbodies identified by the Department as providing warm-water aquatic life, the dissolved oxygen shall not be less than 5.5 mg/l as an absolute minimum. At the discretion of the Department, when the Department determines that adequate information exists, the dissolved oxygen shall not fall below 5.5 mg/l as a 30-day mean minimum, and shall not fall below 4.0 mg/l as an absolute minimum (**Table 21**);

(b) Temperature: The changes adopted by the Commission on January 11, 1996, become effective July 1, 1996. Until that time, the requirements of this rule that were in effect on January 10, 1996, apply. The method for measuring the numeric temperature criteria specified in this rule is defined in OAR 340-41-006(54):

(A) To accomplish the goals identified in OAR 340-41-120(11), unless specifically allowed under a Department-approved surface water temperature management plan as required under OAR 340-41-026(3)(a)(D), no measurable surface water temperature increase resulting from anthropogenic activities is allowed:

(i) In a basin for which salmonid fish rearing is a designated beneficial use, and in which surface water temperatures exceed 64.0°F (17.8°C);

(ii) In waters and periods of the year determined by the Department to support native salmonid spawning, egg incubation, and fry emergence from the egg and from the gravels in a basin which exceeds 55.0°F (12.8°C);

(iii) In waters determined by the Department to support or to be necessary to maintain the viability of native Oregon bull trout, when surface water temperatures exceed 50.0°F (10.0°C);

(iv) In waters determined by the Department to be ecologically significant cold-water refugia;

(v) In stream segments containing federally listed Threatened and Endangered species if the increase would impair the biological integrity of the Threatened and Endangered population;

(vi) In Oregon waters when the dissolved oxygen (DO) levels are within 0.5 mg/l or 10 percent saturation of the water column or intergravel DO criterion for a given stream reach or subbasin;

(vii) In natural lakes.

(B) An exceedance of the numeric criteria identified in subparagraphs (A)(i) through (iii) of this subsection will not be deemed a temperature standard violation if it occurs when the air temperature during the warmest seven-day period of the year exceeds the 90th percentile of the seven-day average daily maximum air temperature calculated in a yearly series over the historic record. However, during such periods, the anthropogenic sources must still continue to comply with their surface water temperature management plans developed under OAR 340-41-

026(3)(a)(D);

(C) Any source may petition the Commission for an exception to subparagraphs (A)(i) through (vii) of this subsection for discharge above the identified criteria if:

(i) The source provides the necessary scientific information to describe how the designated beneficial uses would not be adversely impacted; or

(ii) A source is implementing all reasonable management practices or measures; its activity will not significantly affect the beneficial uses; and the environmental cost of treating the parameter to the level necessary to assure full protection would outweigh the risk to the resource.

(c) Turbidity (Nephelometric Turbidity Units, NTU): No more than a ten percent cumulative increase in natural stream turbidities shall be allowed, as measured relative to a control point immediately upstream of the turbidity causing activity. However, limited duration activities necessary to address an emergency or to accommodate essential dredging, construction or other legitimate activities and which cause the standard to be exceeded may be authorized provided all practicable turbidity control techniques have been applied and one of the following has been granted:

(A) Emergency activities: Approval coordinated by DEQ with the Department of Fish and Wildlife under conditions they may prescribe to accommodate response to emergencies or to protect public health and welfare;

(B) Dredging, Construction or other Legitimate Activities: Permit or certification authorized under terms of Section 401 or 404 (Permits and Licenses, Federal Water Pollution Control Act) or OAR 141-85-100 et seq. (Removal and Fill Permits, Division of State Lands), with limitations and conditions governing the activity set forth in the permit or certificate.

(d) pH (hydrogen ion concentration): pH values shall not fall outside the range of 7.0 to 9.0. When greater than 25 percent of ambient measurements taken between June and September are greater than pH 8.7, and as resources are available according to priorities set by the Department, the Department shall determine whether the values higher than 8.7 are anthropogenic or natural in origin. The following exception applies: Waters impounded by dams existing on January 1, 1996, which have pHs that exceed the criteria shall not be considered in violation of the standard if the Department determines that the exceedance would not occur without the impoundment and that all practicable measures have been taken to bring the pH in the impounded waters into compliance with the criteria;

(e) Bacteria standards:

(A) Numeric Criteria: Organisms of the coliform group commonly associated with fecal sources (MPN or equivalent membrane filtration using a representative number of samples) shall not exceed the criteria described in subparagraphs (i) and (ii) of this paragraph. Freshwaters:

(i) A 30-day log mean of 126 *E. coli* organisms per 100 ml, based on a minimum of five (5) samples;

(ii) No single sample shall exceed 406 *E. coli* organisms per 100 ml;

(B) Raw Sewage Prohibition: No sewage shall be discharged into or in any other manner be allowed to enter the waters of the State unless such sewage has been treated in a manner approved by the Department or otherwise allowed by these rules;

(C) Animal Waste: Runoff contaminated with domesticated animal wastes shall be minimized and treated to the maximum extent practicable before it is allowed to enter waters of the State;

(D) Effluent Limitations and Water Quality Limited Waterbodies: Effluent limitations to implement the criteria in this rule are found in OAR 340-41-120(12) through (16).

Implementation of the criteria in this rule in water quality limited waterbodies is described in OAR 340-41-026(3)(a)(I) and OAR 340-41-120(17).

(f) Bacterial pollution or other conditions deleterious to waters used for domestic purposes, livestock watering, irrigation, or bathing, or otherwise injurious to public health shall not be allowed;

(g) The liberation of dissolved gases, such as carbon dioxide, hydrogen sulfide, or other gases, in sufficient quantities to cause objectionable odors or to be deleterious to fish or other aquatic life, navigation, recreation, or other reasonable uses made of such waters shall not be allowed;

(h) The development of fungi or other growths having a deleterious effect on stream bottoms, fish or other aquatic life, or which are injurious to health, recreation, or industry shall not be allowed;

(i) The creation of tastes or odors or toxic or other conditions that are deleterious to fish or other aquatic life or affect the potability of drinking water or the palatability of fish or shellfish shall not be allowed;

(j) The formation of appreciable bottom or sludge deposits or the formation of any organic or inorganic deposits deleterious to fish or other aquatic life or injurious to public health, recreation, or industry shall not be allowed;

(k) Objectionable discoloration, scum, oily sleek or floating solids, or coating of aquatic life with oil films shall not be allowed;

(l) Aesthetic conditions offensive to the human senses of sight, taste, smell, or touch shall not be allowed;

(m) Radioisotope concentrations shall not exceed maximum permissible concentrations (MPCs) in drinking water, edible fishes, wildlife, irrigated crops, livestock and dairy products, or pose an external radiation hazard;

(n) The concentration of total dissolved gas relative to atmospheric pressure at the point of sample collection shall not exceed 110 percent of saturation, except when stream flow exceeds the ten-year, seven-day average flood. However, for Hatchery receiving waters and waters of less than two feet in depth, the concentration of total dissolved gas relative to atmospheric pressure at the point of sample collection shall not exceed 105 percent of saturation;

(o) Total Dissolved Solids: Guide concentrations listed below shall not be exceeded unless otherwise specifically authorized by DEQ upon such conditions as it may deem necessary to carry out the general intent of this plan and to protect the beneficial uses set forth in OAR 340-41-882: None;

(p) Toxic Substances:

(A) Toxic substances shall not be introduced above natural background levels in the waters of the state in amounts, concentrations, or combinations which may be harmful, may chemically change to harmful forms in the environment, or may accumulate in sediments or bioaccumulate in aquatic life or wildlife to levels that adversely affect public health, safety, or welfare; aquatic life; wildlife; or other designated beneficial uses;

(B) Levels of toxic substances shall not exceed the criteria listed in **Table 20** which were based on criteria established by EPA and published in **Quality Criteria for Water (1986)**, unless otherwise noted;

(C) The criteria in paragraph (B) of this subsection shall apply unless data from scientifically valid studies demonstrate that the most sensitive designated beneficial uses will not be adversely affected by exceeding a criterion or that a more restrictive criterion is warranted to

protect beneficial uses, as accepted by the Department on a site specific basis. Where no published EPA criteria exist for a toxic substance, public health advisories and other published scientific literature may be considered and used, if appropriate, to set guidance values;

(D) Bio-assessment studies such as laboratory bioassays or instream measurements of indigenous biological communities, shall be conducted, as the Department deems necessary, to monitor the toxicity of complex effluents, other suspected discharges or chemical substances without numeric criteria, to aquatic life. These studies, properly conducted in accordance with standard testing procedures, may be considered as scientifically valid data for the purposes of paragraph (C) of this subsection. If toxicity occurs, the Department shall evaluate and implement measures necessary to reduce toxicity on a case-by-case basis.

(3) Where the naturally occurring quality parameters of waters of the Malheur Lake Basin are outside the numerical limits of the above assigned water quality standards, the naturally occurring water quality shall be the standard. However, in such cases special restrictions, described in OAR 340-41-026(3)(a)(C)(iii), apply to discharges that affect dissolved oxygen.

(4) Mixing zones:

(a) The Department may allow a designated portion of a receiving water to serve as a zone of dilution for wastewaters and receiving waters to mix thoroughly and this zone will be defined as a mixing zone;

(b) The Department may suspend all or part of the water quality standards, or set less restrictive standards, in the defined mixing zone, provided that the following conditions are met:

(A) The water within the mixing zone shall be free of:

(i) Materials in concentrations that will cause acute toxicity to aquatic life as measured by a Department approved bioassay method. Acute toxicity is lethality to aquatic life as measured by a significant difference in lethal concentration between the control and 100 percent effluent in an acute bioassay test. Lethality in 100 percent effluent may be allowed due to ammonia and chlorine only when it is demonstrated on a case-by-case basis that immediate dilution of the effluent within the mixing zone reduces toxicity below lethal concentrations. The Department may on a case-by-case basis establish a zone of immediate dilution if appropriate for other parameters;

(ii) Materials that will settle to form objectionable deposits;

(iii) Floating debris, oil, scum, or other materials that cause nuisance conditions;

(iv) Substances in concentrations that produce deleterious amounts of fungal or bacterial growths.

(B) The water outside the boundary of the mixing zone shall:

(i) Be free of materials in concentrations that will cause chronic (sublethal) toxicity. Chronic toxicity is measured as the concentration that causes long-term sublethal effects, such as significantly impaired growth or reproduction in aquatic organisms, during a testing period based on test species life cycle. Procedures and end points will be specified by the Department in wastewater discharge permits;

(ii) Meet all other water quality standards under normal annual low flow conditions.

(c) The limits of the mixing zone shall be described in the wastewater discharge permit. In determining the location, surface area, and volume of a mixing zone area, the Department may use appropriate mixing zone guidelines to assess the biological, physical, and chemical character of receiving waters, and effluent, and the most appropriate placement of the outfall, to protect instream water quality, public health, and other beneficial uses. Based on receiving water and effluent characteristics, the Department shall define a mixing zone in the immediate

area of a wastewater discharge to:

(A) Be as small as feasible;

(B) Avoid overlap with any other mixing zones to the extent possible and be less than the total stream width as necessary to allow passage of fish and other aquatic organisms;

(C) Minimize adverse effects on the indigenous biological community especially when species are present that warrant special protection for their economic importance, tribal significance, ecological uniqueness, or for other similar reasons as determined by the Department and does not block the free passage of aquatic life;

(D) Not threaten public health;

(E) Minimize adverse effects on other designated beneficial uses outside the mixing zone.

(d) The Department may request the applicant of a permitted discharge for which a mixing zone is required, to submit all information necessary to define a mixing zone, such as:

(A) Type of operation to be conducted;

(B) Characteristics of effluent flow rates and composition;

(C) Characteristics of low flows of receiving waters;

(D) Description of potential environmental effects;

(E) Proposed design for outfall structures.

(e) The Department may, as necessary, require mixing zone monitoring studies and/or bioassays to be conducted to evaluate water quality or biological status within and outside the mixing zone boundary;

(f) The Department may change mixing zone limits or require the relocation of an outfall if it determines that the water quality within the mixing zone adversely affects any existing beneficial uses in the receiving waters.

(g) **Alternate requirements for mixing zones**: For some existing or proposed discharges to some receiving streams, it may not be practicable to treat wastewater to meet instream water quality standards at the point of discharge or within a short distance from the point of discharge. Some of these discharges could be allowed without impairing the overall ecological integrity of the receiving streams, or may provide an overall benefit to the receiving stream. This section specifies the conditions and circumstances under which a mixing zone may be allowed by the Department that extends beyond the immediate area around a discharge point, or that extends across a stream width. An alternate mixing zone may be approved if the applicant demonstrates to the Department's satisfaction that the discharge (A) creates an overall environmental benefit, or (B) is to a constructed water course, or (C) is insignificant. The three circumstances under which alternate mixing zones may be established are described further below.

(A) **Overall environmental benefit**.

(i) Qualifying for alternate mixing zone based on overall environmental benefit: In order to qualify for an alternate mixing zone based on a finding of overall environmental benefit, the discharger must demonstrate to the Department's satisfaction the following:

(a) That all practical strategies have been or will be implemented to minimize the pollutant loads in the effluent; and

(b) For proposed increased discharges, the current actual discharge and mixing zone does not meet the requirements of a standard mixing zone; and

(c) Either that, on balance, an environmental benefit would be lost if the discharge did not occur, or that the discharger is prepared to undertake other actions that will mitigate the effect of the discharge to an extent resulting in a net environmental benefit to the receiving stream.

(d) For the purposes of this rule, the term "practical" shall include environmental impact, availability of alternatives, cost of alternatives, and other relevant factors.

(ii) Studies required and evaluation of studies: In order to demonstrate that, on balance, an environmental benefit will result from the discharge, the following information shall be provided by the applicant:

(a) The effluent flow and pollutant loads that are detected or expected in the effluent, by month, both average and expected worst case discharges. The parameters to be evaluated include at a minimum temperature, biochemical oxygen demand, total suspended solids, total dissolved solids, pH, settleable solids, e. coli bacteria, oil and grease, any pollutants listed in Table 20 of this rule division, and any pollutant for which the receiving stream has been designated by the Department as water quality limited; and

(b) Receiving stream flow, by month; and

(c) The expected impact of the discharge, by month, on the receiving stream for the entire proposed mixing zone area for all of the pollutants listed above. Included in this analysis shall be a comparison of the receiving stream water quality with the discharge and without the discharge; and

(d) A description of fish, other vertebrate populations, and macroinvertebrates that reside in or are likely to pass through the proposed mixing zone, including expected location (if known), species identification, stage of development, and time of year when their presence is expected. For existing discharges, the applicant shall provide the same information for similar nearby streams that are unaffected by wastewater discharges. In addition, any threatened or endangered species in the immediate vicinity of the receiving stream shall be identified; and

(e) The expected impact of the discharge on aquatic organisms and/or fish passage, including any expected negative impacts from the effluent attracting fish where that is not desirable; and

(f) A description of the expected environmental benefits to be derived from the discharge or other mitigation measures proposed by the applicant, including but not limited to improvements in water quality, improvements in fish passage, and improvements in aquatic habitat. If the applicant proposes to undertake mitigation measures designed to provide environmental benefits (e.g., purchasing water or water conservation rights to increase stream flows or establishing stream cover to decrease temperature), the applicant shall describe the mitigation measures in detail, including a description of the steps it will take to ensure that the benefits of the mitigation measures are attained and are not lost or diminished over time.

(g) Some or all of the above study requirements may be waived by the Department, if the Department determines that the information is not needed. In the event that the Department does waive some or all of the above study requirements, the basis for waiving the requirements will be included in the permit evaluation report upon the next permit renewal or modification relating to the mixing zone.

(h) Upon request of the Department, the applicant shall conduct additional studies to further evaluate the impact of the discharge, which may include whole effluent toxicity testing, stream surveys for water quality, stream surveys for fish and other aquatic organisms, or other studies as specified by the Department.

(i) In evaluating whether an existing or proposed increase in an existing discharge would result in a net environmental benefit, the applicant shall use the native biological community in a nearby, similar stream that is unaffected by wastewater discharges. The Department shall consider all information generated as required in this rule and other relevant information. The

evaluation shall consider benefits to the native aquatic biological community only.

(iii) Permit conditions: Upon determination by the Department that the discharge and mitigation measures (if any) will likely result in an overall environmental benefit, the Department shall include appropriate permit conditions to insure that the environmental benefits are attained and continue. Such permit conditions may include but not be limited to:

(a) Maximum allowed effluent flows and pollutant loads;

(b) Requirements to maintain land ownership, easements, contracts, or other legally binding measures necessary to assure that mitigation measures, if any, remain in place and effective;

(c) Special operating conditions;

(d) Monitoring and reporting requirements; and

(e) Studies to evaluate the effectiveness of mitigation measures.

(B) **Constructed water course**: A mixing zone may be extended through a constructed water course and into a natural water course. For the purposes of this rule, a constructed water course is one that was constructed for irrigation, site drainage, or wastewater conveyance, and has the following characteristics:

(i) Irrigation flows, stormwater runoff, or wastewater flows have replaced natural streamflow regimes; and

(ii) The channel form is greatly simplified in lengthwise and cross sectional profiles; and

(iii) Physical and biological characteristics that differ significantly from nearby natural streams; and

(iv) A much lower diversity of aquatic species than found in nearby natural streams; and

(v) If the constructed water course is an irrigation canal, then it must have effective fish screens in place to qualify as a constructed water course.

(C) **Insignificant discharges**: Insignificant discharges are those that either by volume, pollutant characteristics, and/or temporary nature are expected to have little if any impact on beneficial uses in the receiving stream, and for which the extensive evaluations required for discharges to smaller streams are not warranted. For the purposes of this rule, only filter backwash discharges and underground storage tank cleanups are considered insignificant discharges.

(D) **Other requirements for alternate mixing zones**: The following are additional requirements for dischargers requesting an alternate mixing zone:

(i) Most discharges that qualify for an alternate mixing zone will extend through the receiving stream until a larger stream is reached, where thorough mixing of the effluent can occur and where the edge of the allowed mixing zone will be located. The portion of the mixing zone in the larger stream must meet all of the requirements of the standard mixing zone, including not blocking aquatic life passage; and

(ii) An alternate mixing zone shall not be granted if a municipal drinking water intake is located within the proposed mixing zone, and the discharge has a significant adverse impact on the drinking water source; and

(iii) The discharge will not pose an unreasonable hazard to the environment or pose a significant health risk, considering the likely pathways of exposure; and

(iv) The discharge shall not be acutely toxic to organisms passing through the mixing zone; and

(v) An alternate mixing zone shall not be granted if the substances discharged may accumulate in the sediments or bioaccumulate in aquatic life or wildlife to levels that adversely

affect public health, safety, or welfare; aquatic life; wildlife; or other designated beneficial uses; and

(vi) In the event that the receiving stream is water quality limited, the requirements for discharges to water quality limited streams supersede this rule.

(5) Testing methods: The analytical testing methods for determining compliance with the water quality standards contained in this rule shall be in accordance with the most recent edition of **Standard Methods for the Examination of Water and Waste Water published jointly by the American Public Health Association, American Water Works Association, and Water Pollution Control Federation,** unless the Department has published an applicable superseding method, in which case testing shall be in accordance with the superseding method; provided, however, that testing in accordance with an alternative method shall comply with this rule if the Department has published the method or has approved the method in writing.

[**Publications**: The publication(s) referred to or incorporated by reference in this rule are available from the office of the Department of Environmental Quality.]

Stat. Auth.: ORS 468B.035 & 468.735 ORS 468B.048
Stat. Implemented: ORS 468B.048
Hist.: DEQ 128, f. & ef. 1-21-77; DEQ 1-1980, f. & ef. 1-9-80; DEQ 18-1987, f. & ef. 9-4-87; DEQ 14-1991, f. & cert. ef. 8-13-91; DEQ 17-1992, f. & cert. ef. 8-7-92 (and corrected 8-13-92)

Minimum Design Criteria for Treatment and Control of Wastes

340-41-895 Subject to the implementation program set forth in OAR 340-41-120, prior to discharge of any wastes from any new or modified facility to any waters of the Malheur Lake Basin, such wastes shall be treated and controlled in facilities designed in accordance with the following minimum criteria (In designing treatment facilities, average conditions and a normal range of variability are generally used in establishing design criteria. A facility once completed and placed in operation should operate at or near the design limit most of the time but may operate below the design criteria limit at times due to variables which are unpredictable or uncontrollable. This is particularly true for biological treatment facilities. The actual operating limits are intended to be established by permit pursuant to ORS 468.740 and recognize that the actual performance level may at times be less than the design criteria.):

(1) Sewage wastes:

(a) A minimum of secondary treatment or equivalent control and unless otherwise specifically authorized by the Department, operation of all waste treatment and control facilities at maximum practicable efficiency and effectiveness so as to minimize waste discharges to public waters;

(b) Effluent BOD concentrations in mg/l, divided by the dilution factor (ratio of receiving stream flow to effluent flow) shall not exceed one unless otherwise approved by the EQC;

(c) Sewage wastes shall be disinfected, after treatment and prior to discharge, equivalent to thorough mixing with sufficient chlorine to provide a residual of at least one part per million after 60 minutes of contact time unless otherwise specifically authorized by permit;

(d) Positive protection shall be provided to prevent bypassing raw or inadequately treated sewage to public waters unless otherwise approved by the Department where elimination of inflow and infiltration would be necessary but not presently practicable;

(e) More stringent waste treatment and control requirements may be imposed where special

conditions may require.

(2) Industrial wastes:

(a) After maximum practicable inplant control, a minimum of secondary treatment or equivalent control (reduction of suspended solids and organic material where present in significant quantities, effective disinfection where bacterial organisms of public health significance are present, and control of toxic or other deleterious substances);

(b) Specific industrial waste treatment requirements shall be determined on an individual basis in accordance with the provisions of this plan, applicable federal requirements, and the following:

(A) The uses which are or may likely be made of the receiving stream;

(B) The size and nature of flow of the receiving stream;

(C) The quantity and quality of wastes to be treated; and

(D) The presence or absence of other sources of pollution on the same watershed.

(c) Where industrial, commercial, or agricul-tural effluents contain significant quantities of potentially toxic elements, treatment requirements shall be determined utilizing appropriate bioassays;

(d) Industrial cooling waters containing significant heat loads shall be subjected to offstream cooling or heat recovery prior to discharge to public waters;

(e) Positive protection shall be provided to prevent bypassing of raw or inadequately treated industrial wastes to any public waters;

(f) Facilities shall be provided to prevent and contain spills of potentially toxic or hazardous materials and a positive program for containment and cleanup of such spills should they occur shall be developed and maintained.

Stat. Auth.: ORS Ch. 468
Hist.: DEQ 128, f. & ef. 1-21-77

Goose and Summer Lakes Basin

Beneficial Water Uses to be Protected

340-41-922 Water quality in the Goose and Summer Lakes Basin (See **Figures 1** and **19**) shall be managed to protect the recognized beneficial uses as indicated in **Table 18**.

Stat. Auth.: ORS Ch. 468
Hist.: DEQ 128, f. & ef. 1-21-77

Water Quality Standards Not to be Exceeded (To be Adopted Pursuant to ORS 468.735 and Enforceable Pursuant to ORS 468.720, 468.990, and 468.992)

340-41-925 (1) Notwithstanding the water quality standards contained below, the highest and best practicable treatment and/or control of wastes, activities, and flow shall in every case be provided so as to maintain dissolved oxygen and overall water quality at the highest possible levels and water temperatures, coliform bacteria concentrations, dissolved chemical substances, toxic materials, radioactivity, turbidities, color, odor, and other deleterious factors at the lowest possible levels.

(2) No wastes shall be discharged and no activities shall be conducted which either alone or in combination with other wastes or activities will cause violation of the following standards in the waters of the Goose and Summer Lakes Basin:

(a) Dissolved oxygen (DO): The changes adopted by the Commission on January 11, 1996, become effective July 1, 1996. Until that time, the requirements of this rule that were in effect on January 10, 1996, apply:

(A) For waterbodies identified by the Department as providing salmonid spawning, during the periods from spawning until fry emergence from the gravels, the following criteria apply:

(i) The dissolved oxygen shall not be less than 11.0 mg/l. However, if the minimum intergravel dissolved oxygen, measured as a spatial median, is 8.0 mg/l or greater, then the DO criterion is 9.0 mg/l;

(ii) Where conditions of barometric pressure, altitude, and temperature preclude attainment of the 11.0 mg/l or 9.0 mg/l criteria, dissolved oxygen levels shall not be less than 95 percent of saturation.

(B) For waterbodies identified by the Department as providing salmonid spawning during the period from spawning until fry emergence from the gravels, the spatial median intergravel dissolved oxygen concentration shall not fall below 6.0 mg/l;

(C) A spatial median of 8.0 mg/l intergravel dissolved oxygen level shall be used to identify areas where the recognized beneficial use of salmonid spawning, egg incubation and fry emergence from the egg and from the gravels may be impaired and therefore require action by the Department. Upon determination that the spatial median intergravel dissolved oxygen concentration is below 8.0 mg/l, the Department may, in accordance with priorities established by the Department for evaluating water quality impaired waterbodies, determine whether to list the waterbody as water quality limited under the Section 303(d) of the Clean Water Act, initiate pollution control strategies as warranted, and where needed cooperate with appropriate designated management agencies to evaluate and implement necessary best management practices for nonpoint source pollution control;

(D) For waterbodies identified by the Department as providing cold-water aquatic life, the dissolved oxygen shall not be less than 8.0 mg/l as an absolute minimum. Where conditions of barometric pressure, altitude, and temperature preclude attainment of the 8.0 mg/l, dissolved oxygen shall not be less than 90 percent of saturation. At the discretion of the Department, when the Department determines that adequate information exists, the dissolved oxygen shall not fall below 8.0 mg/l as a 30-day mean minimum, 6.5 mg/l as a seven-day minimum mean, and shall not fall below 6.0 mg/l as an absolute minimum **(Table 21)**;

(E) For waterbodies identified by the Department as providing cool-water aquatic life, the dissolved oxygen shall not be less than 6.5 mg/l as an absolute minimum. At the discretion of the Department, when the Department determines that adequate information exists, the dissolved oxygen shall not fall below 6.5 mg/l as a 30-day mean minimum, 5.0 mg/l as a seven-day minimum mean, and shall not fall below 4.0 mg/l as an absolute minimum **(Table 21)**;

(F) For waterbodies identified by the Department as providing warm-water aquatic life, the dissolved oxygen shall not be less than 5.5 mg/l as an absolute minimum. At the discretion of the Department, when the Department determines that adequate information exists, the dissolved oxygen shall not fall below 5.5 mg/l as a 30-day mean minimum, and shall not fall below 4.0 mg/l as an absolute minimum **(Table 21)**;

(b) Temperature: The changes adopted by the Commission on January 11, 1996, become effective July 1, 1996. Until that time, the requirements of this rule that were in effect on January 10, 1996, apply. The method for measuring the numeric temperature criteria specified in this rule is defined in OAR 340-41-006(54):

(A) To accomplish the goals identified in OAR 340-41-120(11), unless specifically allowed under a Department-approved surface water temperature management plan as required under OAR 340-41-026(3)(a)(D), no measurable surface water temperature increase resulting from anthropogenic activities is allowed:

(i) In a basin for which salmonid fish rearing is a designated beneficial use, and in which surface water temperatures exceed 64.0°F (17.8°C);

(ii) In waters and periods of the year determined by the Department to support native salmonid spawing, egg incubation, and fry emergence from the egg and from the gravels in a basin which exceeds 55.0°F (12.8°C);

(iii) In waters determined by the Department to support or to be necessary to maintain the viability of native Oregon bull trout, when surface water temperatures exceed 50.0°F (10.0°C);

(iv) In waters determined by the Department to be ecologically significant cold-water refugia;

(v) In stream segments containing federally listed Threatened and Endangered species if the increase would impair the biological integrity of the Threatened and Endangered population;

(vi) In Oregon waters when the dissolved oxygen (DO) levels are within 0.5 mg/l or 10 percent saturation of the water column or intergravel DO criterion for a given stream reach or subbasin;

(vii) In natural lakes.

(B) An exceedance of the numeric criteria identified in subparagraphs (A)(i) through (iii) of this subsection will not be deemed a temperature standard violation if it occurs when the air temperature during the warmest seven-day period of the year exceeds the 90th percentile of the seven-day average daily maximum air temperature calculated in a yearly series over the historic record. However, during such periods, the anthropogenic sources must still continue to comply with their surface water temperature management plans developed under OAR 340-41-026(3)(a)(D);

(C) Any source may petition the Commission for an exception to subparagraphs (A)(i) through (vii) of this subsection for discharge above the identified criteria if:

(i) The source provides the necessary scientific information to describe how the designated beneficial uses would not be adversely impacted; or

(ii) A source is implementing all reasonable management practices or measures; its activity will not significantly affect the beneficial uses; and the environmental cost of treating the parameter to the level necessary to assure full protection would outweigh the risk to the resource.

(c) Turbidity (Nephelometric Turbidity Units, NTU): No more than a ten percent cumulative increase in natural stream turbidities shall be allowed, as measured relative to a control point immediately upstream of the turbidity causing activity. However, limited duration activities necessary to address an emergency or to accommodate essential dredging, construction or other legitimate activities and which cause the standard to be exceeded may be authorized provided all practicable turbidity control techniques have been applied and one of the following has been granted:

(A) Emergency activities: Approved coordinated by DEQ with the Department of Fish and Wildlife under conditions they may prescribe to accommodate response to emergencies or to protect public health and welfare;

(B) Dredging, Construction or other Legitimate Activities: Permit or certification authorized under terms of Section 401 or 404 (Permits and Licenses, Federal Water Pollution Control Act) or OAR 141-85-100 et seq. (Removal and Fill Permits, Division of State Lands),

with limitations and conditions governing the activity set forth in the permit or certificate.

(d) pH (hydrogen ion concentration):

(A) Goose Lake: pH values shall not fall outside the range of 7.5 to 9.5;

(B) All other basin waters: pH values shall not fall outside the range of 7.0 to 9.0. When greater than 25 percent of ambient measurements taken between June and September are greater than pH 8.7, and as resources are available according to priorities set by the Department, the Department shall determine whether the values higher than 8.7 are anthropogenic or natural in origin. The following exception applies: Waters impounded by dams existing on January 1, 1996, which have pHs that exceed the criteria shall not be considered in violation of the standard if the Department determines that the exceedance would not occur without the impoundment and that all practicable measures have been taken to bring the pH in the impounded waters into compliance with the criteria.

(e) Bacteria standards:

(A) Numeric Criteria: Organisms of the coliform group commonly associated with fecal sources (MPN or equivalent membrane filtration using a representative number of samples) shall not exceed the criteria described in subparagraphs (i) and (ii) of this paragraph. Freshwaters:

(i) A 30-day log mean of 126 *E. coli* organisms per 100 ml, based on a minimum of five (5) samples;

(ii) No single sample shall exceed 406 *E. coli* organisms per 100 ml;

(B) Raw Sewage Prohibition: No sewage shall be discharged into or in any other manner be allowed to enter the waters of the State unless such sewage has been treated in a manner approved by the Department or otherwise allowed by these rules;

(C) Animal Waste: Runoff contaminated with domesticated animal wastes shall be minimized and treated to the maximum extent practicable before it is allowed to enter waters of the State;

(D) Effluent Limitations and Water Quality Limited Waterbodies: Effluent limitations to implement the criteria in this rule are found in OAR 340-41-120(12) through (16). Implementation of the criteria in this rule in water quality limited waterbodies is described in OAR 340-41-026(3)(a)(I) and OAR 340-41-120(17).

(f) Bacterial pollution or other conditions deleterious to waters used for domestic purposes, livestock watering, irrigation, bathing, or otherwise injurious to public health shall not be allowed;

(g) The liberation of dissolved gases, such as carbon dioxide, hydrogen sulfide, or other gases, in sufficient quantities to cause objectionable odors or to be deleterious to fish or other aquatic life, recreation, or other reasonable uses made of such waters shall not be allowed;

(h) The development of fungi or other growths having a deleterious effect on stream bottoms, fish or other aquatic life, or which are injurious to health, recreation, or industry shall not be allowed;

(i) The creation of tastes or odors or toxic or other conditions that are deleterious to fish or other aquatic life or affect the potability of drinking water or the palatability of fish shall not be allowed;

(j) The formation of appreciable bottom or sludge deposits or the formation of any organic or inorganic deposits deleterious to fish or other aquatic life or injurious to public health, recreation, or industry shall not be allowed;

(k) Objectionable discoloration, scum, oily sleek or floating solids, or coating of aquatic life with oil films shall not be allowed;

(l) Aesthetic conditions offensive to the human senses of sight, taste, smell, or touch shall not be allowed;

(m) Radioisotope concentrations shall not exceed maximum permissible concentrations (MPC's) in drinking water, edible fishes, wildlife, irrigated crops, livestock and dairy products, or pose an external radiation hazard;

(n) The concentration of total dissolved gas relative to atmospheric pressure at the point of sample collection shall not exceed 110 percent of saturation, except when stream flow exceeds the ten-year, seven-day average flood. However, for Hatchery receiving waters and waters of less than two feet in depth, the concentration of total dissolved gas relative to atmospheric pressure at the point of sample collection shall not exceed 105 percent of saturation;

(o) Total Dissolved Solids: Guide concentrations listed below shall not be exceeded unless otherwise specifically authorized by DEQ upon such conditions as it may deem necessary to carry out the general intent of this plan and to protect the beneficial uses set forth in OAR 340-41-922: None;

(p) Toxic Substances:

(A) Toxic substances shall not be introduced above natural background levels in the waters of the state in amounts, concentrations, or combinations which may be harmful, may chemically change to harmful forms in the environment, or may accumulate in sediments or bioaccumulate in aquatic life or wildlife to levels that adversely affect public health, safety, or welfare; aquatic life; wildlife; or other designated beneficial uses;

(B) Levels of toxic substances shall not exceed the criteria listed in **Table 20** which were based on criteria established by EPA and published in **Quality Criteria for Water (1986)**, unless otherwise noted;

(C) The criteria in paragraph (B) of this subsection shall apply unless data from scientifically valid studies demonstrate that the most sensitive designated beneficial uses will not be adversely affected by exceeding a criterion or that a more restrictive criterion is warranted to protect beneficial uses, as accepted by the Department on a site specific basis. Where no published EPA criteria exist for a toxic substance, public health advisories and other published scientific literature may be considered and used, if appropriate, to set guidance values;

(D) Bio-assessment studies such as laboratory bioassays or instream measurements of indigenous biological communities, shall be conducted, as the Department deems necessary, to monitor the toxicity of complex effluents, other suspected discharges or chemical substances without numeric criteria, to aquatic life. These studies, properly conducted in accordance with standard testing procedures, may be considered as scientifically valid data for the purposes of paragraph (C) of this subsection. If toxicity occurs, the Department shall evaluate and implement measures necessary to reduce toxicity on a case-by-case basis.

(3) Where the naturally occurring quality parameters of waters of the Goose and Summer Lakes Basin are outside the numerical limits of the above assigned water quality standards, the naturally occurring water quality shall be the standard. However, in such cases special restrictions, described in OAR 340-41-026(3)(a)(C)(iii), apply to discharges that affect dissolved oxygen.

(4) Mixing zones:

(a) The Department may allow a designated portion of a receiving water to serve as a zone of dilution for wastewaters and receiving waters to mix thoroughly and this zone will be defined as a mixing zone;

(b) The Department may suspend all or part of the water quality standards, or set less restrictive standards, in the defined mixing zone, provided that the following conditions are met:

(A) The water within the mixing zone shall be free of:

(i) Materials in concentrations that will cause acute toxicity to aquatic life as measured by a Department approved bioassay method. Acute toxicity is lethality to aquatic life as measured by a significant difference in lethal concentration between the control and 100 percent effluent in an acute bioassay test. Lethality in 100 percent effluent may be allowed due to ammonia and chlorine only when it is demonstrated on a case-by-case basis that immediate dilution of the effluent within the mixing zone reduces toxicity below lethal concentrations. The Department may on a case-by-case basis establish a zone of immediate dilution if appropriate for other parameters;

(ii) Materials that will settle to form objectionable deposits;

(iii) Floating debris, oil, scum, or other materials that cause nuisance conditions;

(iv) Substances in concentrations that produce deleterious amounts of fungal or bacterial growths.

(B) The water outside the boundary of the mixing zone shall:

(i) Be free of materials in concentrations that will cause chronic (sublethal) toxicity. Chronic toxicity is measured as the concentration that causes long-term sublethal effects, such as significantly impaired growth or reproduction in aquatic organisms, during a testing period based on test species life cycle. Procedures and end points will be specified by the Department in wastewater discharge permits;

(ii) Meet all other water quality standards under normal annual low flow conditions.

(c) The limits of the mixing zone shall be described in the wastewater discharge permit. In determining the location, surface area, and volume of a mixing zone area, the Department may use appropriate mixing zone guidelines to assess the biological, physical, and chemical character of receiving waters, and effluent, and the most appropriate placement of the outfall, to protect instream water quality, public health, and other beneficial uses. Based on receiving water and effluent characteristics, the Department shall define a mixing zone in the immediate area of a wastewater discharge to:

(A) Be as small as feasible;

(B) Avoid overlap with any other mixing zones to the extent possible and be less than the total stream width as necessary to allow passage of fish and other aquatic organisms;

(C) Minimize adverse effects on the indigenous biological community especially when species are present that warrant special protection for their economic importance, tribal significance, ecological uniqueness, or for other similar reasons as determined by the Department and does not block the free passage of aquatic life;

(D) Not threaten public health;

(E) Minimize adverse effects on other designated beneficial uses outside the mixing zone.

(d) The Department may request the applicant of a permitted discharge for which a mixing zone is required, to submit all information necessary to define a mixing zone, such as:

(A) Type of operation to be conducted;

(B) Characteristics of effluent flow rates and composition;

(C) Characteristics of low flows of receiving waters;

(D) Description of potential environmental effects;

(E) Proposed design for outfall structures.

(e) The Department may, as necessary, require mixing zone monitoring studies and/or bioassays to be conducted to evaluate water quality or biological status within and outside the mixing zone boundary;

(f) The Department may change mixing zone limits or require the relocation of an outfall if it determines that the water quality within the mixing zone adversely affects any existing beneficial uses in the receiving waters.

(g) **Alternate requirements for mixing zones**: For some existing or proposed discharges to some receiving streams, it may not be practicable to treat wastewater to meet instream water quality standards at the point of discharge or within a short distance from the point of discharge. Some of these discharges could be allowed without impairing the overall ecological integrity of the receiving streams, or may provide an overall benefit to the receiving stream. This section specifies the conditions and circumstances under which a mixing zone may be allowed by the Department that extends beyond the immediate area around a discharge point, or that extends across a stream width. An alternate mixing zone may be approved if the applicant demonstrates to the Department's satisfaction that the discharge (A) creates an overall environmental benefit, or (B) is to a constructed water course, or (C) is insignificant. The three circumstances under which alternate mixing zones may be established are described further below.

(A) **Overall environmental benefit.**

(i) Qualifying for alternate mixing zone based on overall environmental benefit: In order to qualify for an alternate mixing zone based on a finding of overall environmental benefit, the discharger must demonstrate to the Department's satisfaction the following:

(a) That all practical strategies have been or will be implemented to minimize the pollutant loads in the effluent; and

(b) For proposed increased discharges, the current actual discharge and mixing zone does not meet the requirements of a standard mixing zone; and

(c) Either that, on balance, an environmental benefit would be lost if the discharge did not occur, or that the discharger is prepared to undertake other actions that will mitigate the effect of the discharge to an extent resulting in a net environmental benefit to the receiving stream.

(d) For the purposes of this rule, the term "practical" shall include environmental impact, availability of alternatives, cost of alternatives, and other relevant factors.

(ii) Studies required and evaluation of studies: In order to demonstrate that, on balance, an environmental benefit will result from the discharge, the following information shall be provided by the applicant:

(a) The effluent flow and pollutant loads that are detected or expected in the effluent, by month, both average and expected worst case discharges. The parameters to be evaluated include at a minimum temperature, biochemical oxygen demand, total suspended solids, total dissolved solids, pH, settleable solids, e. coli bacteria, oil and grease, any pollutants listed in Table 20 of this rule division, and any pollutant for which the receiving stream has been designated by the Department as water quality limited; and

(b) Receiving stream flow, by month; and

(c) The expected impact of the discharge, by month, on the receiving stream for the entire proposed mixing zone area for all of the pollutants listed above. Included in this analysis shall be a comparison of the receiving stream water quality with the discharge and without the discharge; and

(d) A description of fish, other vertebrate populations, and macroinvertebrates that reside in or are likely to pass through the proposed mixing zone, including expected location (if known), species identification, stage of development, and time of year when their presence is expected. For existing discharges, the applicant shall provide the same information for similar nearby streams that are unaffected by wastewater discharges. In addition, any threatened or endangered species in the immediate vicinity of the receiving stream shall be identified; and

(e) The expected impact of the discharge on aquatic organisms and/or fish passage, including any expected negative impacts from the effluent attracting fish where that is not desirable; and

(f) A description of the expected environmental benefits to be derived from the discharge or other mitigation measures proposed by the applicant, including but not limited to improvements in water quality, improvements in fish passage, and improvements in aquatic habitat. If the applicant proposes to undertake mitigation measures designed to provide environmental benefits (e.g., purchasing water or water conservation rights to increase stream flows or establishing stream cover to decrease temperature), the applicant shall describe the mitigation measures in detail, including a description of the steps it will take to ensure that the benefits of the mitigation measures are attained and are not lost or diminished over time.

(g) Some or all of the above study requirements may be waived by the Department, if the Department determines that the information is not needed. In the event that the Department does waive some or all of the above study requirements, the basis for waiving the requirements will be included in the permit evaluation report upon the next permit renewal or modification relating to the mixing zone.

(h) Upon request of the Department, the applicant shall conduct additional studies to further evaluate the impact of the discharge, which may include whole effluent toxicity testing, stream surveys for water quality, stream surveys for fish and other aquatic organisms, or other studies as specified by the Department.

(i) In evaluating whether an existing or proposed increase in an existing discharge would result in a net environmental benefit, the applicant shall use the native biological community in a nearby, similar stream that is unaffected by wastewater discharges. The Department shall consider all information generated as required in this rule and other relevant information. The evaluation shall consider benefits to the native aquatic biological community only.

(iii) Permit conditions: Upon determination by the Department that the discharge and mitigation measures (if any) will likely result in an overall environmental benefit, the Department shall include appropriate permit conditions to insure that the environmental benefits are attained and continue. Such permit conditions may include but not be limited to:

(a) Maximum allowed effluent flows and pollutant loads;

(b) Requirements to maintain land ownership, easements, contracts, or other legally binding measures necessary to assure that mitigation measures, if any, remain in place and effective;

(c) Special operating conditions;

(d) Monitoring and reporting requirements; and

(e) Studies to evaluate the effectiveness of mitigation measures.

(B) **Constructed water course**: A mixing zone may be extended through a constructed water course and into a natural water course. For the purposes of this rule, a constructed water course is one that was constructed for irrigation, site drainage, or wastewater conveyance, and has the following characteristics:

(i) Irrigation flows, stormwater runoff, or wastewater flows have replaced natural streamflow regimes; and

(ii) The channel form is greatly simplified in lengthwise and cross sectional profiles; and

(iii) Physical and biological characteristics that differ significantly from nearby natural streams; and

(iv) A much lower diversity of aquatic species than found in nearby natural streams; and

(v) If the constructed water course is an irrigation canal, then it must have effective fish screens in place to qualify as a constructed water course.

(C) **Insignificant discharges**: Insignificant discharges are those that either by volume, pollutant characteristics, and/or temporary nature are expected to have little if any impact on beneficial uses in the receiving stream, and for which the extensive evaluations required for discharges to smaller streams are not warranted. For the purposes of this rule, only filter backwash discharges and underground storage tank cleanups are considered insignificant discharges.

(D) **Other requirements for alternate mixing zones**: The following are additional requirements for dischargers requesting an alternate mixing zone:

(i) Most discharges that qualify for an alternate mixing zone will extend through the receiving stream until a larger stream is reached, where thorough mixing of the effluent can occur and where the edge of the allowed mixing zone will be located. The portion of the mixing zone in the larger stream must meet all of the requirements of the standard mixing zone, including not blocking aquatic life passage; and

(ii) An alternate mixing zone shall not be granted if a municipal drinking water intake is located within the proposed mixing zone, and the discharge has a significant adverse impact on the drinking water source; and

(iii) The discharge will not pose an unreasonable hazard to the environment or pose a significant health risk, considering the likely pathways of exposure; and

(iv) The discharge shall not be acutely toxic to organisms passing through the mixing zone; and

(v) An alternate mixing zone shall not be granted if the substances discharged may accumulate in the sediments or bioaccumulate in aquatic life or wildlife to levels that adversely affect public health, safety, or welfare; aquatic life; wildlife; or other designated beneficial uses; and

(vi) In the event that the receiving stream is water quality limited, the requirements for discharges to water quality limited streams supersede this rule.

(5) Testing methods: The analytical testing methods for determining compliance with the water quality standards contained in this rule shall be in accordance with the most recent edition of **Standard Methods for the Examination of Water and Waste Water published jointly by the American Public Health Association, American Water Works Association, and Water Pollution Control Federation,** unless the Department has published an applicable superseding method, in which case testing shall be in accordance with the superseding method; provided, however, that testing in accordance with an alternative method shall comply with this rule if the Department has published the method or has approved the method in writing.

[**Publications:** The publication(s) referred to or incorporated by reference in this rule are available from the office of the Department of Environmental Quality.]

Stat. Auth.: ORS 468B.035 & 468.735 ORS 468B.048
Stat. Implemented: ORS 468B.048
Hist.: DEQ 128, f. & ef. 1-21-77; DEQ 1-1980, f. & ef. 1-9-80; DEQ 18-1987, f. & ef. 9-4-87; DEQ 14-1991, f. & cert. ef. 8-13-91; DEQ 17-1992, f. & cert. ef. 8-7-92 (and corrected 8-13-92)

Minimum Design Criteria for Treatment and Control of Wastes

340-41-935 Subject to the implementation program set forth in OAR 340-41-120, prior to discharge of any wastes from any new or modified facility to any waters of the Goose and Summer Lakes Basin, such wastes shall be treated and controlled in facilities designed in accordance with the following minimum criteria. (In designing treatment facilities, average conditions and a normal range of variability are generally used in establishing design criteria. A facility once completed and placed in operation should operate at or near the design limit most of the time but may operate below the design criteria limit at times due to variables which are unpredictable or uncon-trollable. This is particularly true for biological treatment facilities. The actual operating limits are intended to be established by permit pursuant to ORS 468.740 and recognize that the actual performance level may at times be less than the design criteria).

(1) Sewage wastes:

(a) A minimum of secondary treatment or equivalent control and unless otherwise specifically authorized by the Department, operation of all waste treatment and control facilities at maximum practicable efficiency and effectiveness so as to minimize waste discharges to public waters;

(b) Effluent BOD concentrations in mg/l, divided by the dilution factor (ratio of receiving stream flow to effluent flow) shall not exceed one, unless otherwise authorized by the Environmental Quality Commission for existing facilities;

(c) Sewage wastes shall be disinfected, after treatment and prior to discharge, equivalent to thorough mixing with sufficient chlorine to provide a residual of at least one part per million after 60 minutes of contact time unless otherwise specifically authorized by permit;

(d) Positive protection shall be provided to prevent bypassing raw or inadequately treated sewage to public waters unless otherwise approved by the Department where elimination of inflow and infiltration would be necessary but not presently practicable;

(e) More stringent waste treatment and control requirements may be imposed where special conditions may require.

(2) Industrial wastes:

(a) After maximum practicable inplant control, a minimum of secondary treatment or equivalent control (reduction of suspended solids and organic material where present in significant quantities, effective disinfection where bacterial organisms of public health significance are present, and control of toxic or other deleterious substances);

(b) Specific industrial waste treatment requirements shall be determined on an individual basis in accordance with the provisions of this plan, applicable federal requirements, and the following:

(A) The uses which are or may likely be made of the receiving stream;

(B) The size and nature of flow of the receiving stream;

(C) The quantity and quality of wastes to be treated; and

(D) The presence or absence of other sources of pollution on the same watershed.

(c) Where industrial, commercial, or agricul-tural effluents contain significant quantities of potentially toxic elements, treatment require-ments shall be determined utilizing appropriate bioassays;

(d) Industrial cooling waters containing significant heat loads shall be subjected to offstream cooling or heat recovery prior to discharge to public waters;

(e) Positive protection shall be provided to prevent bypassing of raw or inadequately treated industrial wastes to any public waters;

(f) Facilities shall be provided to prevent and contain spills of potentially toxic or hazardous materials and a positive program for containment and cleanup of such spills should they occur shall be developed and maintained.

Stat. Auth.: ORS Ch. 468
Hist.: DEQ 128, f. & ef. 1-21-77

Klamath Basin

Beneficial Water Uses to be Protected

350-41-962 Water quality in the Klamath Basin (see **Figures 1** and **20**) shall be managed to protect the recognized beneficial uses as indicated in **Table 19**.

Stat. Auth.: ORS Ch. 468
Hist.: DEQ 128, f. & ef. 1-21-77

Water Quality Standards Not to be Exceeded (To be Adopted Pursuant to ORS 468.735 and Enforceable Pursuant to ORS 468.720, 468.990, and 468.992)

340-41-965 (1) Notwithstanding the water quality standards contained below, the highest and best practicable treatment and/or control of wastes, activities, and flows shall in every case be provided so as to maintain dissolved oxygen and overall water quality at the highest possible levels and water temperatures, coliform bacteria concentrations, dissolved chemical substances, toxic materials, radioactivity, turbidities, color, odor, and other deleterious factors at the lowest levels.

(2) No wastes shall be discharged and no activities shall be conducted which either alone or in combination with other wastes or activities will cause violation of the following standards in the waters of the Klamath Basin:

(a) Dissolved oxygen (DO): The changes adopted by the Commission on January 11, 1996, become effective July 1, 1996. Until that time, the requirements of this rule that were in effect on January 10, 1996, apply:

(A) For waterbodies identified by the Department as providing salmonid spawning, during the periods from spawning until fry emergence from the gravels, the following criteria apply:

(i) The dissolved oxygen shall not be less than 11.0 mg/l. However, if the minimum intergravel dissolved oxygen, measured as a spatial median, is 8.0 mg/l or greater, then the DO criterion is 9.0 mg/l;

(ii) Where conditions of barometric pressure, altitude, and temperature preclude

attainment of the 11.0 mg/l or 9.0 mg/l criteria, dissolved oxygen levels shall not be less than 95 percent of saturation.

(B) For waterbodies identified by the Department as providing salmonid spawning during the period from spawning until fry emergence from the gravels, the spatial median intergravel dissolved oxygen concentration shall not fall below 6.0 mg/l;

(C) A spatial median of 8.0 mg/l intergravel dissolved oxygen level shall be used to identify areas where the recognized beneficial use of salmonid spawning, egg incubation and fry emergence from the egg and from the gravels may be impaired and therefore require action by the Department. Upon determination that the spatial median intergravel dissolved oxygen concentration is below 8.0 mg/l, the Department may, in accordance with priorities established by the Department for evaluating water quality impaired waterbodies, determine whether to list the waterbody as water quality limited under the Section 303(d) of the Clean Water Act, initiate pollution control strategies as warranted, and where needed cooperate with appropriate designated management agencies to evaluate and implement necessary best management practices for nonpoint source pollution control;

(D) For waterbodies identified by the Department as providing cold-water aquatic life, the dissolved oxygen shall not be less than 8.0 mg/l as an absolute minimum. Where conditions of barometric pressure, altitude, and temperature preclude attainment of the 8.0 mg/l, dissolved oxygen shall not be less than 90 percent of saturation. At the discretion of the Department, when the Department determines that adequate information exists, the dissolved oxygen shall not fall below 8.0 mg/l as a 30-day mean minimum, 6.5 mg/l as a seven-day minimum mean, and shall not fall below 6.0 mg/l as an absolute minimum (**Table 21**);

(E) For waterbodies identified by the Department as providing cool-water aquatic life, the dissolved oxygen shall not be less than 6.5 mg/l as an absolute minimum. At the discretion of the Department, when the Department determines that adequate information exists, the dissolved oxygen shall not fall below 6.5 mg/l as a 30-day mean minimum, 5.0 mg/l as a seven-day minimum mean, and shall not fall below 4.0 mg/l as an absolute minimum (**Table 21**);

(F) For waterbodies identified by the Department as providing warm-water aquatic life, the dissolved oxygen shall not be less than 5.5 mg/l as an absolute minimum. At the discretion of the Department, when the Department determines that adequate information exists, the dissolved oxygen shall not fall below 5.5 mg/l as a 30-day mean minimum, and shall not fall below 4.0 mg/l as an absolute minimum (**Table 21**);

(b) Temperature: The changes adopted by the Commission on January 11, 1996, become effective July 1, 1996. Until that time, the requirements of this rule that were in effect on January 10, 1996, apply. The method for measuring the numeric temperature criteria specified in this rule is defined in OAR 340-41-006(54):

(A) To accomplish the goals identified in OAR 340-41-120(11), unless specifically allowed under a Department-approved surface water temperature management plan as required under OAR 340-41-026(3)(a)(D), no measurable surface water temperature increase resulting from anthropogenic activities is allowed:

(i) In a basin for which salmonid fish rearing is a designated beneficial use, and in which surface water temperatures exceed 64.0°F (17.8°C);

(ii) In waters and periods of the year determined by the Department to support native salmonid spawning, egg incubation, and fry emergence from the egg and from the gravels in a basin which exceeds 55.0°F (12.8°C);

(iii) In waters determined by the Department to support or to be necessary to maintain the viability of native Oregon bull trout, when surface water temperatures exceed 50.0°F (10.0°C);

(iv) In waters determined by the Department to be ecologically significant cold-water refugia;

(v) In stream segments containing federally listed Threatened and Endangered species if the increase would impair the biological integrity of the Threatened and Endangered population;

(vi) In Oregon waters when the dissolved oxygen (DO) levels are within 0.5 mg/l or 10 percent saturation of the water column or intergravel DO criterion for a given stream reach or subbasin;

(vii) In natural lakes.

(B) An exceedance of the numeric criteria identified in subparagraphs (A)(i) through (iii) of this subsection will not be deemed a temperature standard violation if it occurs when the air temperature during the warmest seven-day period of the year exceeds the 90th percentile of the seven-day average daily maximum air temperature calculated in a yearly series over the historic record. However, during such periods, the anthropogenic sources must still continue to comply with their surface water temperature management plans developed under OAR 340-41-026(3)(a)(D);

(C) Any source may petition the Commission for an exception to subparagraphs (A)(i) through (vii) of this subsection for discharge above the identified criteria if:

(i) The source provides the necessary scientific information to describe how the designated beneficial uses would not be adversely impacted; or

(ii) A source is implementing all reasonable management practices or measures; its activity will not significantly affect the beneficial uses; and the environmental cost of treating the parameter to the level necessary to assure full protection would outweigh the risk to the resource.

(c) Turbidity (Nephelometric Turbidity Units, NTU): No more than a ten percent cumulative increase in natural stream turbidities shall be allowed, as measured relative to a control point immediately upstream of the turbidity causing activity. However, limited duration activities necessary to address an emergency or to accommodate essential dredging, construction or other legitimate activities and which cause the standard to be exceeded may be authorized provided all practicable turbidity control techniques have been applied and one of the following has been granted:

(A) Emergency activities: Approval coordinated by DEQ with the Department of Fish and Wildlife under conditions they may prescribe to accommodate response to emergencies or to protect public health and welfare;

(B) Dredging, Construction or other Legitimate Activities: Permit or certification authorized under terms of Section 401 or 404 (Permits and Licenses, Federal Water Pollution Control Act) or OAR 141-85-100 et seq. (Removal and Fill Permits, Division of State Lands), with limitations and conditions governing the activity set forth in the permit or certificate;

(d) pH (hydrogen ion concentration): pH values shall not fall outside the ranges identified in paragraphs (A) and (B) of this subsection. The following exception applies: Waters impounded by dams existing on January 1, 1996, which have pHs that exceed the criteria shall not be considered in violation of the standard if the Department determines that the exceedance would not occur without the impoundment and that all practicable measures have been taken to bring the pH in the impounded waters into compliance with the criteria:

(A) Fresh waters except Cascade lakes: pH values shall not fall outside the range of 6.5 - 9.0. When greater than 25 percent of ambient measurements taken between June and September are greater than pH 8.7, and as resources are available according to priorities set by the Department, the Department shall determine whether the values higher than 8.7 are anthropogenic or natural in origin;

(B) Cascade lakes above 5,000 feet altitude: pH values shall not fall outside the range of 6.0 to 8.5.

(e) Bacteria standards:

(A) Numeric Criteria: Organisms of the coliform group commonly associated with fecal sources (MPN or equivalent membrane filtration using a representative number of samples) shall not exceed the criteria described in subparagraphs (i) and (ii) of this paragraph. Freshwaters:

(i) A 30-day log mean of 126 *E. coli* organisms per 100 ml, based on a minimum of five (5) samples;

(ii) No single sample shall exceed 406 *E. coli* organisms per 100 ml;

(B) Raw Sewage Prohibition: No sewage shall be discharged into or in any other manner be allowed to enter the waters of the State unless such sewage has been treated in a manner approved by the Department or otherwise allowed by these rules;

(C) Animal Waste: Runoff contaminated with domesticated animal wastes shall be minimized and treated to the maximum extent practicable before it is allowed to enter waters of the State;

(D) Effluent Limitations and Water Quality Limited Waterbodies: Effluent limitations to implement the criteria in this rule are found in OAR 340-41-120(12) through (16). Implementation of the criteria in this rule in water quality limited waterbodies is described in OAR 340-41-026(3)(a)(I) and OAR 340-41-120(17).

(f) Bacterial pollution or other conditions deleterious to waters used for domestic purposes, livestock watering, irrigation, bathing, or shellfish propagation or otherwise injurious to public health shall not be allowed;

(g) The liberation of dissolved gases, such as carbon dioxide, hydrogen sulfide, or other gases, in sufficient quantities to cause objectionable odors or to be deleterious to fish or other aquatic life, navigation, recreation, or other reasonable uses made of such waters shall not be allowed;

(h) The development of fungi or other growths having a deleterious effect on stream bottoms, fish or other aquatic life, or which are injurious to health, recreation, or industry shall not be allowed;

(i) The creation of tastes or odors or toxic or other conditions that are deleterious to fish or other aquatic life or affect the potability of drinking water or the palatability of fish or shellfish shall not be allowed;

(j) The formation of appreciable bottom or sludge deposits or the formation of any organic or inorganic deposits deleterious to fish or other aquatic life or injurious to public health, recreation, or industry shall not be allowed;

(k) Objectionable discoloration, scum, oily sleek or floating solids, or coating of aquatic life with oil films shall not be allowed;

(l) Aesthetic conditions offensive to the human senses of sight, taste, smell, or touch shall not be allowed;

(m) Radioisotope concentrations shall not exceed maximum permissible concentration (MPC's) in drinking water, edible fishes or shellfishes, wildlife, irrigated crops, livestock and dairy products, or pose an external radiation hazard;

(n) The concentration of total dissolved gas relative to atmospheric pressure at the point of sample collection shall not exceed 110 percent of saturation, except when stream flow exceeds the ten-year, seven-day average flood. However, for Hatchery receiving waters and waters of less than two feet in depth, the concentration of total dissolved gas relative to atmospheric pressure at the point of sample collection shall not exceed 105 percent of saturation;

(o) Total Dissolved Solids: Guide concentrations listed below shall not be exceeded unless otherwise specifically authorized by DEQ upon such conditions as it may deem necessary to carry out the general intent of this plan and to protect the beneficial uses set forth in OAR 340-41-962: Mainstem Klamath River from Klamath Lake to the Oregon–California Border (river miles 255 to 208.5): The specific conductance shall not exceed 400 micromhos at 77° F. when measured at the Oregon-California Border (river mile 208.5);

(p) Toxic Substances:

(A) Toxic substances shall not be introduced above natural background levels in the waters of the state in amounts, concentrations, or combinations which may be harmful, may chemically change to harmful forms in the environment, or may accumulate in sediments or bioaccumulate in aquatic life or wildlife to levels that adversely affect public health, safety, or welfare; aquatic life; wildlife; or other designated beneficial uses;

(B) Levels of toxic substances shall not exceed the criteria listed in **Table 20** which were based on criteria established by EPA and published in **Quality Criteria for Water (1986)**, unless otherwise noted;

(C) The criteria in paragraph (B) of this subsection shall apply unless data from scientifically valid studies demonstrate that the most sensitive designated beneficial uses will not be adversely affected by exceeding a criterion or that a more restrictive criterion is warranted to protect beneficial uses, as accepted by the Department on a site specific basis. Where no published EPA criteria exist for a toxic substance, public health advisories and other published scientific literature may be considered and used, if appropriate, to set guidance values;

(D) Bio-assessment studies such as laboratory bioassays or instream measurements of indigenous biological communities, shall be conducted, as the Department deems necessary, to monitor the toxicity of complex effluents, other suspected discharges or chemical substances without numeric criteria, to aquatic life. These studies, properly conducted in accordance with standard testing procedures, may be considered as scientifically valid data for the purposes of paragraph (C) of this subsection. If toxicity occurs, the Department shall evaluate and implement measures necessary to reduce toxicity on a case-by-case basis.

(3) Where the naturally occurring quality parameters of waters of the Klamath basin are outside the numerical limits of the above assigned water quality standards, the naturally occurring water quality shall be the standard. However, in such cases special restrictions, described in OAR 340-41-026(3)(a)(C)(iii), apply to discharges that affect dissolved oxygen.

(4) Mixing zones:

(a) The Department may allow a designated portion of a receiving water to serve as a zone of dilution for wastewaters and receiving waters to mix thoroughly and this zone will be defined as a mixing zone;

(b) The Department may suspend all or part of the water quality standards, or set less

restrictive standards, in the defined mixing zone, provided that the following conditions are met:

(A) The water within the mixing zone shall be free of:

(i) Materials in concentrations that will cause acute toxicity to aquatic life as measured by a Department approved bioassay method. Acute toxicity is lethality to aquatic life as measured by a significant difference in lethal concentration between the control and 100 percent effluent in an acute bioassay test. Lethality in 100 percent effluent may be allowed due to ammonia and chlorine only when it is demonstrated on a case-by-case basis that immediate dilution of the effluent within the mixing zone reduces toxicity below lethal concentrations. The Department may on a case-by-case basis establish a zone of immediate dilution if appropriate for other parameters;

(ii) Materials that will settle to form objectionable deposits;

(iii) Floating debris, oil, scum, or other materials that cause nuisance conditions;

(iv) Substances in concentrations that produce deleterious amounts of fungal or bacterial growths.

(B) The water outside the boundary of the mixing zone shall:

(i) Be free of materials in concentrations that will cause chronic (sublethal) toxicity. Chronic toxicity is measured as the concentration that causes long-term sublethal effects, such as significantly impaired growth or reproduction in aquatic organisms, during a testing period based on test species life cycle. Procedures and end points will be specified by the Department in wastewater discharge permits;

(ii) Meet all other water quality standards under normal annual low flow conditions.

(c) The limits of the mixing zone shall be described in the wastewater discharge permit. In determining the location, surface area, and volume of a mixing zone area, the Department may use appropriate mixing zone guidelines to assess the biological, physical, and chemical character of receiving waters, and effluent, and the most appropriate placement of the outfall, to protect instream water quality, public health, and other beneficial uses. Based on receiving water and effluent characteristics, the Department shall define a mixing zone in the immediate area of a wastewater discharge to:

(A) Be as small as feasible;

(B) Avoid overlap with any other mixing zones to the extent possible and be less than the total stream width as necessary to allow passage of fish and other aquatic organisms;

(C) Minimize adverse effects on the indigenous biological community especially when species are present that warrant special protection for their economic importance, tribal significance, ecological uniqueness, or for other similar reasons as determined by the Department and does not block the free passage of aquatic life;

(D) Not threaten public health;

(E) Minimize adverse effects on other designated beneficial uses outside the mixing zone.

(d) The Department may request the applicant of a permitted discharge for which a mixing zone is required, to submit all information necessary to define a mixing zone, such as:

(A) Type of operation to be conducted;

(B) Characteristics of effluent flow rates and composition;

(C) Characteristics of low flows of receiving waters;

(D) Description of potential environmental effects;

(E) Proposed design for outfall structures.

(e) The Department may, as necessary, require mixing zone monitoring studies and/or bioassays to be conducted to evaluate water quality or biological status within and outside the mixing zone boundary;

(f) The Department may change mixing zone limits or require the relocation of an outfall if it determines that the water quality within the mixing zone adversely affects any existing beneficial uses in the receiving waters.

(g) **Alternate requirements for mixing zones**: For some existing or proposed discharges to some receiving streams, it may not be practicable to treat wastewater to meet instream water quality standards at the point of discharge or within a short distance from the point of discharge. Some of these discharges could be allowed without impairing the overall ecological integrity of the receiving streams, or may provide an overall benefit to the receiving stream. This section specifies the conditions and circumstances under which a mixing zone may be allowed by the Department that extends beyond the immediate area around a discharge point, or that extends across a stream width. An alternate mixing zone may be approved if the applicant demonstrates to the Department's satisfaction that the discharge (A) creates an overall environmental benefit, or (B) is to a constructed water course, or (C) is insignificant. The three circumstances under which alternate mixing zones may be established are described further below.

(A) **Overall environmental benefit**.

(i) Qualifying for alternate mixing zone based on overall environmental benefit: In order to qualify for an alternate mixing zone based on a finding of overall environmental benefit, the discharger must demonstrate to the Department's satisfaction the following:

(a) That all practical strategies have been or will be implemented to minimize the pollutant loads in the effluent; and

(b) For proposed increased discharges, the current actual discharge and mixing zone does not meet the requirements of a standard mixing zone; and

(c) Either that, on balance, an environmental benefit would be lost if the discharge did not occur, or that the discharger is prepared to undertake other actions that will mitigate the effect of the discharge to an extent resulting in a net environmental benefit to the receiving stream.

(d) For the purposes of this rule, the term "practical" shall include environmental impact, availability of alternatives, cost of alternatives, and other relevant factors.

(ii) Studies required and evaluation of studies: In order to demonstrate that, on balance, an environmental benefit will result from the discharge, the following information shall be provided by the applicant:

(a) The effluent flow and pollutant loads that are detected or expected in the effluent, by month, both average and expected worst case discharges. The parameters to be evaluated include at a minimum temperature, biochemical oxygen demand, total suspended solids, total dissolved solids, pH, settleable solids, e. coli bacteria, oil and grease, any pollutants listed in Table 20 of this rule division, and any pollutant for which the receiving stream has been designated by the Department as water quality limited; and

(b) Receiving stream flow, by month; and

(c) The expected impact of the discharge, by month, on the receiving stream for the entire proposed mixing zone area for all of the pollutants listed above. Included in this analysis shall be a comparison of the receiving stream water quality with the discharge and without the discharge; and

(d) A description of fish, other vertebrate populations, and macroinvertebrates that reside

in or are likely to pass through the proposed mixing zone, including expected location (if known), species identification, stage of development, and time of year when their presence is expected. For existing discharges, the applicant shall provide the same information for similar nearby streams that are unaffected by wastewater discharges. In addition, any threatened or endangered species in the immediate vicinity of the receiving stream shall be identified; and

(e) The expected impact of the discharge on aquatic organisms and/or fish passage, including any expected negative impacts from the effluent attracting fish where that is not desirable; and

(f) A description of the expected environmental benefits to be derived from the discharge or other mitigation measures proposed by the applicant, including but not limited to improvements in water quality, improvements in fish passage, and improvements in aquatic habitat. If the applicant proposes to undertake mitigation measures designed to provide environmental benefits (e.g., purchasing water or water conservation rights to increase stream flows or establishing stream cover to decrease temperature), the applicant shall describe the mitigation measures in detail, including a description of the steps it will take to ensure that the benefits of the mitigation measures are attained and are not lost or diminished over time.

(g) Some or all of the above study requirements may be waived by the Department, if the Department determines that the information is not needed. In the event that the Department does waive some or all of the above study requirements, the basis for waiving the requirements will be included in the permit evaluation report upon the next permit renewal or modification relating to the mixing zone.

(h) Upon request of the Department, the applicant shall conduct additional studies to further evaluate the impact of the discharge, which may include whole effluent toxicity testing, stream surveys for water quality, stream surveys for fish and other aquatic organisms, or other studies as specified by the Department.

(i) In evaluating whether an existing or proposed increase in an existing discharge would result in a net environmental benefit, the applicant shall use the native biological community in a nearby, similar stream that is unaffected by wastewater discharges. The Department shall consider all information generated as required in this rule and other relevant information. The evaluation shall consider benefits to the native aquatic biological community only.

(iii) Permit conditions: Upon determination by the Department that the discharge and mitigation measures (if any) will likely result in an overall environmental benefit, the Department shall include appropriate permit conditions to insure that the environmental benefits are attained and continue. Such permit conditions may include but not be limited to:

(a) Maximum allowed effluent flows and pollutant loads;

(b) Requirements to maintain land ownership, easements, contracts, or other legally binding measures necessary to assure that mitigation measures, if any, remain in place and effective;

(c) Special operating conditions;

(d) Monitoring and reporting requirements; and

(e) Studies to evaluate the effectiveness of mitigation measures.

(B) **Constructed water course**: A mixing zone may be extended through a constructed water course and into a natural water course. For the purposes of this rule, a constructed water course is one that was constructed for irrigation, site drainage, or wastewater conveyance, and has the following characteristics:

(i) Irrigation flows, stormwater runoff, or wastewater flows have replaced natural

streamflow regimes; and

(ii) The channel form is greatly simplified in lengthwise and cross sectional profiles; and

(iii) Physical and biological characteristics that differ significantly from nearby natural streams; and

(iv) A much lower diversity of aquatic species than found in nearby natural streams; and

(v) If the constructed water course is an irrigation canal, then it must have effective fish screens in place to qualify as a constructed water course.

(C) **Insignificant discharges**: Insignificant discharges are those that either by volume, pollutant characteristics, and/or temporary nature are expected to have little if any impact on beneficial uses in the receiving stream, and for which the extensive evaluations required for discharges to smaller streams are not warranted. For the purposes of this rule, only filter backwash discharges and underground storage tank cleanups are considered insignificant discharges.

(D) **Other requirements for alternate mixing zones**: The following are additional requirements for dischargers requesting an alternate mixing zone:

(i) Most discharges that qualify for an alternate mixing zone will extend through the receiving stream until a larger stream is reached, where thorough mixing of the effluent can occur and where the edge of the allowed mixing zone will be located. The portion of the mixing zone in the larger stream must meet all of the requirements of the standard mixing zone, including not blocking aquatic life passage; and

(ii) An alternate mixing zone shall not be granted if a municipal drinking water intake is located within the proposed mixing zone, and the discharge has a significant adverse impact on the drinking water source; and

(iii) The discharge will not pose an unreasonable hazard to the environment or pose a significant health risk, considering the likely pathways of exposure; and

(iv) The discharge shall not be acutely toxic to organisms passing through the mixing zone; and

(v) An alternate mixing zone shall not be granted if the substances discharged may accumulate in the sediments or bioaccumulate in aquatic life or wildlife to levels that adversely affect public health, safety, or welfare; aquatic life; wildlife; or other designated beneficial uses; and

(vi) In the event that the receiving stream is water quality limited, the requirements for discharges to water quality limited streams supersede this rule.

(5) Testing methods: The analytical testing methods for determining compliance with the water quality standards contained in this rule shall be in accordance with the most recent edition of **Standard Methods for the Examination of Water and Waste Water published jointly by the American Public Health Association, American Water Works Association, and Water Pollution Control Federation,** unless the Department has published an applicable superseding method, in which case testing shall be in accordance with the superseding method; provided, however, that testing in accordance with an alternative method shall comply with this rule if the Department has published the method or has approved the method in writing.

[**Publications:** The publication(s) referred to or incorporated by reference in this rule are available from the office of the Department of Environmental Quality.]

Stat. Auth.: ORS 468B.035 & 468.735 ORS 468B.048
Stat. Implemented: ORS 468B.048
Hist.: DEQ 128, f. & ef. 1-21-77; DEQ 1-1980, f. & ef. 1-9-80; DEQ 18-1987, f. & ef. 9-4-87; DEQ 14-1991, f. & cert. ef. 8-13-91; DEQ 17-1992, f. & cert. ef. 8-7-92 (and corrected 8-13-92)

Minimum Design Criteria for Treatment and Control of Waste

340-41-975 Subject to the implementation program set in OAR 340-41-120, prior to discharge of any wastes from any new or modified facility to any waters of the Klamath Basin, such wastes shall be treated and controlled in facilities designed in accordance with the following minimum criteria. (In designing treatment facilities, average conditions and a normal range of variability are generally used in establishing design criteria. A facility once completed and placed in operation may operate below the design criteria limit at times due to variables which are unpredictable or uncon-trollable. This is particularly true for biological treatment facilities. The actual operating limits are intended to be established by permit pursuant to ORS 468.740 and recognize that the actual performance level may at times be less than the design criteria.):

(1) Sewage wastes:

(a) During periods of low streams flows (approximately May 1 to October 31): Treatment resulting in monthly average effluent concentra-tions not to exceed 20 mg/l of BOD and 20 of suspended solids or equivalent control;

(b) During the period of winter stream flows (approximately November 1 to April 30): A minimum of secondary treatment or equivalent control and unless otherwise specifically authorized by the Department, operation of all waste treatment and control facilities to maximum practicable efficient and effectiveness so as to minimize waste discharge to public waters;

(c) Effluent BOD concentrations in mg/l, divided by the dilution factor (ratio of receiving stream flow to effluent flow) shall not exceed one unless other wise approved by the EQC;

(d) Sewage wastes shall be disinfected, after treatment, equivalent to thorough mixing with sufficient chlorine to provide a residual of at least 1 part per million after 60 minutes of contact time unless otherwise specifically authorized by permit;

(e) Positive protection shall be provided to prevent bypassing raw or inadequately treated sewage to public waters unless otherwise approved by the Department where elimination of infiltration and inflow would be necessary but not presently practicable;

(f) More stringent waste treatment and control requirements may be imposed where special conditions may require.

(2) Industrial wastes:

(a) After maximum practicable inplant control, a minimum of secondary treatment or equivalent control (reduction of suspended solids and organic material where present in significant quantities, effective disinfection where bacterial organisms of public health significance are present, and control or toxic or other deleterious substance);

(b) Specific industrial waste treatment requirements shall be determined on an individual basis in accordance with the provisions of this plan, applicable federal requirements, and the following:

(A) The uses which are or may likely be made of the receiving stream;

(B) The size and nature of flow of the receiving stream;

(C) The quantity and quality of wastes to be treated; and

(D) The presence or absence of other sources of pollution on the same watershed.

(c) Where industrial, commercial, or agri-cultural effluents contain significant quantities of

potentially toxic elements, treatment requirements shall be determined utilizing appropriate bioassays;

(d) Industrial cooling waters containing significant heat loads shall be subjected to offstream cooling or heat recovery prior to discharge to public waters;

(e) Positive protection shall be provided to prevent bypassing of raw or inadequately treated industrial waste to any public waters;

(f) Facilities shall be provided to prevent and contain spills of potentially toxic or hazardous materials and a positive program for containment and cleanup of such spills should they occur shall be developed and maintained.

Stat. Auth.: ORS Ch. 468
Hist.: DEQ 128, f. & ef. 1-21-77

ITEM B

DIVISION 51

CONFINED ANIMAL FEEDING OR HOLDING OPERATIONS

Purpose

340-51-005 It is the purpose of these rules to protect the quality of the environment and public health in Oregon by requiring application of the best practicable waste control technology relative to location, construction, operations and maintenance of confined animal feeding or holding facilities and operations.

Stat. Auth.: ORS Ch. 449
Hist.: DEQ 34, f. 2-3-72, ef. 2-15-72

Definitions

340-51-010 Unless the context requires otherwise, as used in these rules:

(1) "Department" means the Oregon Department of Environmental Quality.

(2) "Confined animal feeding operation" means the concentrated confined feeding or holding of animals or poultry, including, but not limited to horse, cattle, sheep, or swine feeding areas, dairy confinement areas, slaughterhouse or shipping terminal holding pens, poultry and egg production facilities and fur farms, in buildings or in pens or lots where the surface has been prepared with concrete, rock or fibrous material to support animals in wet weather or which have wastewater treatment works.

(3) "Person" means the state, any individual, public or private corporation, political subdivision, governmental agency, municipality, industry, copartnership, association, firm, trust, estate or any other legal entity whatsoever.

(4) "Waste control facility" means all or any part of a system or systems used in connection with a confined feeding or holding operation for the:

(a) Control of drainage;

(b) Collection, retention, treatment, and disposal of liquid wastes or contaminated drainage waters; or

(c) Collection, handling, storage, treatment or processing and disposing of manure.

(5) "Waters of the State" include lakes, bays, ponds, impounding reservoirs, springs, wells, rivers, streams, creeks, estuaries, marshes, inlet, canals, the Pacific Ocean within the territorial limits of the State of Oregon, and all other bodies of surface or underground waters, natural or artificial, inland or coastal, fresh or salt, public or private (except those private waters which do not combine or effect a junction with natural surface or underground waters) which are wholly or partially within or bordering the state or within its jurisdiction.

Stat. Auth.: ORS Ch. 449 & 468.020
Hist.: DEQ 34, f. 2-3-72, ef. 2-15-72; DEQ 21-1990, f. & cert. ef. 7-6-90

New, Modified or Expanded Facilities and Operations

340-51-015 A person constructing or commencing to operate a confined feeding or holding operation or waste control facility, or substantially modifying or expanding an existing confined feeding and holding operation or wa facility shall first submit detailed p specifications for said facility and operat other necessary information to the Departme obtain approval of the proposed facility operation from the Department in writing.

(1) Plans and specifications and othe information to be submitted shall constitute a complete, descriptive proposal and should include, to the extent that such information is pertinent and available, the following:

(a) Location map showing ownership, zoning and use of adjacent lands and location of the proposed confined feeding or holding facility or operation in relation to residences and domestic water supply sources;

(b) Topographic map of the proposed site showing the natural drainage pattern and the proposed surface water diversion and area and roof drainage control system or systems;

(c) Climatological data for the proposed site describing normal annual and seasonal precipitation quantities and patterns, evaporation rates and prevailing winds;

(d) Information regarding the occurrence of usable groundwaters and typical soil types in the area of the proposed site and disposal areas;

(e) Estimated maximum numbers and types of animals to be confined at the site at any one time and estimated volume of wastes to be collected and disposed of;

(f) Detailed plans and specifications and procedures for wastewater and manure collection, handling, retention, storage, treatment and disposal systems;

(g) Details of feed preparation, storage, handling and use and proposed methods and facilities for controlling wastes that are likely to result therefrom;

(h) Any additional information which the Department may reasonably require to enable it to pass intelligently upon the effects of the proposed confined feeding or holding operation upon environmental quality.

(2) Receipt of applications and a preliminary evaluation of completeness shall be made within 14 days to all applicants. Written notice of approval or disapproval will be issued by the Department to the applicant within 45 days of receipt of complete plans and specifications. Any notice of disapproval will contain itemized deficiencies.

(3) New or substantially modified or expanded facilities or operations shall be constructed in accordance with plans and specifications as approved in writing by the Department.

Stat. Auth.: ORS Ch. 449
Hist.: DEQ 34, f. 2-3-72, ef. 2-15-72

Construction, Operation and Maintenance Requirements

340-51-020 All waste control facilities and confined feeding and holding operations shall be designed, constructed, maintained, and operated in accordance with the following:

(1) All confinement areas, manure handling and accumulation areas and disposal areas and facilities shall be located, constructed, and operated such that manure, contaminated drainage waters or other wastes do not enter the waters of the state

at any time, except as may be permitted by the conditions of a specific waste discharge permit issued in accordance with ORS 449.083.

(2) Unless it can be demonstrated that contaminated drainage can be effectively controlled by other means, or unless a specific written variance is obtained from the Department as provided in OAR 340-51-025, the design, construction, operation, and maintenance of confined feeding and holding operations and waste control facilities shall be in conformance with "Guidelines for the Design and Operation of Animal Waste Control Facilities". (OAR 340-51-050 through 340-51-080).

Stat. Auth.: ORS Ch. 449
Hist.: DEQ 34, f. 2-3-72, ef. 2-15-72

Variances From Specified Requirements

340-51-025 (1) The Department may by specific written variance waive certain requirements of these regulations when size of operation, location and topography, operational procedures, or other special conditions indicate that the purpose of these regulations can be achieved without strict adherence to all of the requirements.

(2) The Department may, in accordance with a specific compliance schedule, grant reasonable time for existing confined feeding or holding operations to comply with these regulations.

Stat. Auth.: ORS Ch. 449
Hist.: DEQ 34, f. 2-3-72, ef. 2-15-72

Advisory Committee

340-51-030 At the request of the animal industry, provision is made for a 13-man committee to serve in an advisory capacity to the Department of Environmental Quality on problems related to the location, construction, operation and maintenance of confined animal feeding and holding operations. The advisory committee will include one member each from:

(1) Oregon Horsemen's Association.
(2) Oregon Dairymen's Association.
(3) Oregon Sheep Growers Association.
(4) Oregon Purebred Swine Growers Association.
(5) Oregon State Fur Breeders Association.
(6) Oregon State Department of Agriculture.
(7) Department of Animal Science, Oregon State University.
(8) Western Oregon Livestock Association and divisional representation from:

(a) Oregon Cattlemen's Association (Producer representative and feeder representative);

(b) Oregon Poultry Council (Oregon Turkey Improvement Association representative, Oregon Poultry Growers Association and Oregon Broiler Growers Association representatives). Each member will be appointed by the presiding officer of the organization he represents and will serve at the pleasure of the organization. The Department shall not be liable for any of the expenses of the advisory committee or its individual members.

Stat. Auth.: ORS Ch. 449
Hist.: DEQ 34, f. 2-3-72, ef. 2-15-72

Guidelines for the Design and Operation of Animal Waste Control Facilities

Scope

340-51-050 The guidelines contained in this rule are recommendations for design and operation of animal waste control facilities and are intended to supplement "Regulations Pertaining to Location, Construction, Operation and Maintenance of Confined Animal Feeding or Holding Operations". They convey many of the criteria considered by the Department of Environmental Quality to conform to best practicable design and operational practices. Alternative methods of control will be acceptable if they can be shown to provide fully equivalent control. Compliance with these guidelines will in most instances constitute satisfactory performance of the design and operation functions to which the "Regulations. . . " apply. Any disapproval of submitted plans, or requirement to improve facilities or their operation, by the Department, will be, insofar as possible, referenced to applicable guidelines or appropriate sections of the "Regulations".

Stat. Auth.: ORS Ch. 449
Hist.: DEQ 34, f. 2-3-72, ef. 2-15-72

Drainage and Waste Volume Control

340-51-055 (1) Roof drainage and uncontaminated surface drainage should be diverted such that it is not allowed to flow through confinement areas or enter waste water holding lagoons, sumps or tanks, unless it can be demonstrated by detailed design and proven operational practices that wastes and contaminated drainage waters can be effectively controlled by other means.

(2) Where large winter use confinement areas are exposed to heavy rainfall, and wastewater storage and disposal capacities are limited, such areas should be covered to minimize wastewater volume.

(3) Waste collection systems utilizing water for flushing manure from floors should minimize water use, and washwater reuse practices should be employed wherever possible.

(4) Animal drinking water and atmospheric control sprays should be managed such that drainage through contaminated areas is minimized.

Stat. Auth.: ORS Ch. 449
Hist.: DEQ 34, f. 2-3-72, ef. 2-15-72

Collection and Storage Facilities

340-51-060 (1) Liquid Manure Systems:

(a) When waste holding lagoons are used to accumulate manure and contaminated drainage waters they should have sufficient usable capacity to contain the maximum accumulated rainfall and manure runoff from the entire collection area for the maximum expected period of accumulation. (As a generalized rule of thumb for design, ponds with capacity equal to 1/2 the average annual rainfall over the entire collection area will usually provide adequate operating and reserve capacity to catch 1 in 10 year peak storm runoff from a feedlot);

(b) Waste holding lagoons and collection sumps should be constructed to provide for at least annual removal of accumulated solids to maintain effective storage capacity;

(c) Earth dikes should be constructed of good quality soil material, well compacted during construction, with sideslopes consistent with accepted earthfill practices for the materials used and stabilized with vegetation recommended by the Agricultural Extension Service, immediately following construction;

(d) Waste holding lagoons or collection sumps with earth dikes should be constructed with overflow relief structures to prevent a washout in the event of failure in other parts of the system;

(e) Where unusually windy conditions prevail, or surface aeration equipment is used, dikes should be protected to prevent erosion;

(f) Reinforced concrete manure holding tanks should be constructed in accordance with, or at least equivalent to, specifications for steel placement and concrete quality contained in a design which has been prepared by or has been reviewed and found acceptable by a qualified structural engineer;

(g) Where seasonal groundwater levels rise above the bottom of a below-ground-level tank, drain tile should be laid at the base of the tank before it is backfilled.

(2) Solids Handling Systems:

(a) Manure solids should be collected, stored, and utilized or disposed of with a minimum of water (or rainfall) addition, in a manner which will prevent water pollution and minimize the production of flies and odors;

(b) Where large accumulations of manure are stored during winter months, contaminated drainage collection and holding or disposal facilities should be provided.

Stat. Auth.: ORS Ch. 449
Hist.: DEQ 34, f. 2-3-72, ef. 2-15-72

Conveyance Facilities and Practices

340-51-065 (1) Liquid manure irrigation systems should have delivery mains buried wherever practicable to minimize the amount of pipe exposed to the hazards of surface damage and failure.

(2) Trucks or tank wagons carrying manure or manure slurry on public roads should be of water tight construction and sufficiently closed or baffled to prevent spillage of any kind.

(3) Manure slurry delivery pipelines crossing streams or gullies should be permanently placed with adequate protection from streamflow hazards and/or braced to prevent excessive bending stress in the pipe.

Stat. Auth.: ORS Ch. 449
Hist.: DEQ 34, f. 2-3-72, ef. 2-15-72

Disposal Facilities and Practices

340-51-070 (1) Liquid Manure Disposal:

(a) When slurry is spread by tank wagon or truck, a predetermined plan of uniform coverage should be established and adhered to. Under no circumstances should a tank be drained when not in motion across suitable receiving land;

(b) Liquid manure irrigation systems should be operated according to a predetermined plan of rotation to insure uniform coverage and prevent prolonged ponding or surface runoff from excessive applications. Leaks and sprinkler head malfunctions should be repaired immediately;

(c) The selection of equipment for land disposal should be based upon land configuration, labor requirement, and long term dependability of the system and its components;

(d) Adequate land should be provided on a year-round basis for effective assimilation of all manure slurry applied, regardless of the method of application used. Land with poor vertical drainage characteristics, high water table or steep slopes should not be selected for use in a year-round plan of manure disposal;

(e) The vegetative cover on disposal land should be harvested or grazed regularly to prevent thatch accumulations of mature grasses and weeds;

(f) Livestock should not be permitted to graze the disposal area during periods of saturated soil conditions;

(g) Seepage basins should not be used except where it can be demonstrated that ground water pollution will not result.

(2) Solids Disposal:

(a) Field spreading of manure should be uniform in distribution and limited in quantity to the capacity of the land to retain it;

(b) Manure should not be stored or deposited where it can be washed into the surface drainage;

(c) Manure solids should not be used as a fill or land raising material where they will pollute ground or surface waters;

(d) All dead animals should be promptly collected and disposed of in an approved manner.

Stat. Auth.: ORS Ch. 449
Hist.: DEQ 34, f. 2-3-72, ef. 2-15-72

Incidental Control Practices

340-51-075 (1) The application of manure or manure slurry to land areas should be accomplished when air movements is least likely to carry objectionable odors to residential or recreational areas.

(2) New confined feeding or holding facilities should not be located where prevailing winds are likely to carry odors into residential or recreational areas. Attention should also be given to expansion of suburban areas and the stability of local zoning restrictions in locating new operations or substantially expanding existing operations.

Stat. Auth.: ORS Ch. 499
Hist.: DEQ 34, f. 2-3-72, ef. 2-15-72

Sources of Qualified Assistance for Design of Facilities

340-51-080 (1) Where drainage control, structural or mechanical facilities are sufficiently large or complex to require specialized professional design, the Department of Environmental Quality may require that detailed plans and specifications be prepared by a qualified engineer for approval prior to construction.

(2) Appropriate design services are available through:

(a) USDA — Soil Conservation Service;

(b) USDA — Oregon State University Extension Service and associated plan services;

(c) Various equipment manufacturers;

(d) Independent consulting engineers. Useful design information is often available through:

(A) County extension offices and Agricultural Experiment Stations;

(B) Department of Environmental Quality engineering staff;

(C) Oregon State University Departments of Agricultural Engineering and Animal Science;

(D) Certain power companies and irrigation districts.

(e) Climatological data reporting services (Oregon State University and state climatologist);

(f) Other livestock operations which have waste control facilities in operation;

(g) Various livestock production associations;

(h) Soil and Water Conservation District offices.

(3) Where long range operational planning appears necessary to development of a workable waste control and disposal system, the Department of Environmental Quality may request that special planning assistance be obtained from Oregon State University and recommendations therefrom be included in the proposal submitted.

(4) Any dam or dike in excess of ten feet in height, or any impoundment volume in excess of 9.2 acre feet is required by state laws to be designed by a qualified engineer and approved by the office of the State Engineer. A copy of "Rules and Regulations of the State Engineer", published annually, should be obtained prior to designing a facility of this type.

(5) Approval by the Department of Environmental Quality of a confined feeding or holding operation does not relieve the applicant from his obligation to comply with other pertinent federal, state or local statutes, regulations or ordinances.

[Publications: The publication(s) referred to or incorporated by reference in this rule are available from the office of the Department of Environmental Quality.]

Stat. Auth.: ORS Ch. 449
Hist.: DEQ 34, f. 2-3-72, ef. 2-15-72

ITEM C

SUBDIVISION J – WORK ENVIRONMENT

0845 '97 DEC 16 P1:47

437-004-1105 Sanitation 1
(1) General 1
(2) Disposal of waste materials 2
(3) Water supply 3
(4) Toilet facilities 4
(5) Washing facilities 5
(6) Change rooms 6
(7) Consumption of food and beverages on the premises 6
(8) Ventilation/smoking 6
(9) Vermin control 6

437-004-1110 Field Sanitation 7
(1) 7
(2) 7
(3) Definitions 7
(4) General requirements 8
(5) Potable drinking water 8
(6) Toilet and handwashing facilities 8
(7) Maintenance 9
(8) Field sanitation notice 9
(9) Reasonable use 10

437-004-1120 Agricultural Labor Housing and Related Facilities 11
(1) Application 11
(2) Exemptions 11
(3) Scope 12
(4) Definitions 12
(5) Housing registration requirements 13
(6) Site 14
(7) Water supply 16
(8) Laundry, handwashing, toilet, and bathing facilities 17
(9) Sewage disposal and plumbing 19
(10) Garbage and refuse disposal 19
(11) Sleeping places 20
(12) Fire protection 22
(13) Cooking, eating, and dining facilities 23
(14) Reporting communicable diseases 23
(15) First aid 24
(16) Access to ORS and OAR 24
(17) Closure and alternative housing 24
(18) Recreation area 25

437-004-1140 Lighting 27
(1) General lighting 27

437-004-1150 Safety Colors for Marking Physical Hazards 29
(1) Color identification 29

437-004-1180 Accident Prevention Signs 31
(1) Scope 31
(2) Definitions 31
(3) Classification of signs by use 31
(4) Sign design 31
(5) Sign wordings 32

437-004-1250 Confined and Hazardous Spaces 33
(1) Definitions 33
(2) Fuel bins 33
(3) Entering confined spaces 34
(4) Training 36
(5) Rescue 36

437-004-1260 Ponds, Separators and Other Hazardous Areas 39
(1) Scope 39
(2) General 39

437-004-1275 The Control of Hazardous Energy (Lockout/tagout) 41
(1) Scope 41
(2) Application 41
(3) Program requirement 41
(4) Definitions 41
(5) General 43
(6) Application of control 47
(7) Release from lockout or tagout 48
(8) Additional requirements 49

437-004-1105 SANITATION

(1) General.

(a) Scope. This applies to agricultural places of employment under conditions not covered by other standards such as OAR 437-004-1110, Field Sanitation and OAR 437-004-9990, Worker Protection Standard.

(b) Definitions applicable to this section.

Lavatory is a basin or similar vessel used for washing hands, arms, face and head.

Non-water carriage toilet facility is a toilet facility not connected to a sewer.

Number of employees is, unless otherwise stated, the maximum number of employees present at any one time on a regular shift.

Personal service room is a room for activities not directly connected with the production or service function of the establishment. This includes, first-aid, medical services, dressing, showering, toilet use, washing and eating.

Potable water is water meeting the bacteriological and chemical quality requirements in the OAR Chapter 333, Division 61, Public Water Systems, of the Oregon State Health Division.

Sanitary means free from agents harmful to health.

Toilet facility is a fixture in a toilet room for defecation, urination, or both.

Toilet room is a room with toilet facilities in or on any place of employment.

Toxic material is a material in concentration or amount that exceeds the applicable limit established by a standard, such as 1910.1000 and 1910.1001 or, lacking an applicable standard, is so toxic as to be a recognized hazard that is causing or is likely to cause death or serious physical harm.

Urinal is a toilet facility in a toilet room for the sole purpose of urination.

Water closet is a toilet in a toilet room for both defecation and urination and flushed with water.

Wet process is any process or operation that normally results in employee walking or working surfaces becoming wet.

(c) Housekeeping.

(A) Keep all work areas as clean as the work allows.

(B) Work area floors must be kept as dry as conditions allow. Where there are wet processes, there must be drainage or false floors, platforms, mats, or other dry standing places, where practicable. Otherwise, provide waterproof shoes or boots.

(C) Keep floors, work areas and aisles free from protruding nails, splinters, loose boards, and unnecessary holes and openings.

(d) Waste disposal.

(A) Any container for solid or liquid waste or refuse that could rot or decompose must not leak. It must be cleanable, sanitary and have a solid tight-fitting cover unless it can be kept sanitary without one.

(B) Remove sweepings, solid or liquid wastes, refuse, and garbage to avoid creating a health hazard and often enough to keep the work area sanitary.

(2) Disposal of waste materials.

(a) Do not allow scrap, waste material or debris to accumulate in work areas.

(b) Remove flammable waste, such as oily rags, or keep it in containers designed or suitable for it.

(c) Where the use of machines or equipment creates hazardous waste materials, they must have suitable collecting or removal systems. If the refuse is unsuitable for removal that way, find a safe method of temporary storage and regular removal.

(3) Water supply.

(a) Potable water.

(A) Every work area must have potable water for drinking, washing, cooking, washing of foods, washing of cooking or eating utensils, washing of food preparation or processing premises, and personal service rooms.

(B) Portable drinking water dispensers must be kept sanitary. They must be capable of being closed and have a tap.

(C) Do not use open containers such as barrels, pails, or tanks for drinking water.

(D) Do not use common drinking cups and other common utensils.

(b) Non-potable water.

(A) Outlets for non-potable water, such as water for industrial or firefighting purposes, must have markings that clearly state that the water is unsafe and is not for drinking, washing, cooking, washing of food or clothes, washing of cooking or eating utensils, washing of food preparation or processing premises, or personal service rooms.

(B) Non-potable water systems or systems carrying any other non-potable substance must prevent backflow or back siphonage into a potable water system.

(C) Do not use non-potable water for washing any part of the body, cooking or eating utensils, or clothing. Clean work areas, other than food processing and preparation areas and personal service rooms, with non-potable water only if it has no chemicals, fecal coliform, or other substances that could create insanitary conditions or be harmful to employees.

NOTE: Water supply systems design and construction standards are in the Oregon Health Division rules, OAR Chapter 333, Division 61, Public Water Systems.

(4) Toilet facilities.

(a) General.

(A) Except as otherwise stated in this paragraph, there must be toilet facilities that comply with Table 1, in toilet rooms separate for each sex. Base the number of facilities for each sex on the number of employees of that sex. You don't need separate rooms for each sex if the toilet rooms are for one person at a time, can be locked from the inside, and have at least one water closet. Where single-occupancy rooms have more than one toilet facility, count only one facility in each toilet room when using table 1.

Table 1

	Minimum number of water closets [1]
1 to 15	1
16 to 35	2
36 to 55	3
56 to 80	4
81 to 110	5
111 to 150	6
Over 150	[2]

[1] If women will not be using the toilet facilities, there may be urinals instead of water closets. The number of water closets must not be less than 2/3 of the minimum specified.

[2] One additional fixture for each additional 40 employees.

(B) The requirements of **(4)(a)(A)** do not apply to mobile crews or to normally unattended work locations if employees have transportation immediately available to nearby toilet facilities that meet the requirements of this subparagraph.

(C) The sewage disposal method must not endanger the health of employees.

(b) Construction of toilet rooms.

(A) Each water closet must be in a separate compartment with a door and walls or partitions between fixtures high enough to assure privacy.

(c) Toilet Facilities. Toilet facilities at permanent work sites must be reasonably accessible.

(5) Washing facilities.

(a) Washing Facilities. Work areas must have hand washing facilities if employees are exposed to hazardous materials that will harm or be absorbed through the skin.

(b) Lavatories.

(A) All places of employment must have lavatories. This does not apply to mobile crews or normally unattended locations if employees have transportation readily available to nearby facilities that meet the other requirements of this paragraph.

(B) Each lavatory must have hot and cold running water, or tepid running water.

(C) There must be hand soap or similar cleansing agents.

(D) There must be individual hand towels of cloth or paper, warm air blowers or clean individual sections of continuous cloth toweling.

(c) Showers.

(A) If a particular standard requires showers, provide them according to subparagraphs **(B)** through **(E)** below.

(B) There must be one shower for every five employees of each sex, or fraction of it, who are required to shower during the same shift.

(C) Provide body soap or other appropriate cleansing agents convenient to the showers as in **(5)(b)(C)**.

(D) Showers must have hot and cold water feeding a single head.

(E) Employees who use showers must have use of individual clean towels.

(6) Change rooms. When a standard requires employees to wear protective clothing because of the possibility of contamination with toxic materials, you must provide change rooms with storage facilities for street clothes and separate storage facilities for the protective clothing. This does not apply to outdoor work.

(7) Consumption of food and beverages on the premises. This applies only where employees are permitted to eat on the premises.

(a) Do not allow workers to eat in a toilet room or in any area exposed to a toxic material.

(b) Provide receptacles made of smooth, corrosion resistant, easily cleanable, or disposable materials for the disposal of waste food. Do not allow them to become over filled. Emptied them daily unless unused and keep them clean and sanitary. They must have a solid tight-fitting cover unless they can be kept sanitary without a cover.

(c) Do not store food or beverages in toilet rooms or in areas exposed to a toxic material, medicines or live virus.

(8) Ventilation/smoking.

(a) There must be enough exhaust or natural ventilation in eating facilities to prevent the build up of cigarette smoke or other atmospheric contaminants.

(b) Where employees work in an enclosed space, there must be enough exhaust or natural ventilation to prevent the build up of cigarette smoke or other atmospheric contaminants.

(9) Vermin control. Every enclosed work place must be built and maintained, as much as practicable, to prevent rodents, insects, and other vermin from entering or living in it.

437-004-1110 FIELD SANITATION

(1) This applies to any agricultural establishment where employees do hand-labor operations in the field.

(2) These rules do not apply to:

(a) Logging operations;

(b) The care or feeding of livestock;

(c) Hand-labor operations in permanent structures (e.g., canning facilities or packing houses); or

(d) Machine operators working entirely separate from hand-labor operations.

(3) Definitions.

Agricultural employer – See universal definition in **4/B**.

Agricultural establishment – See universal definition in **4/B**.

Hand-labor operation – means agricultural activities or agricultural operations performed by hand or with hand tools, including:

(A) Hand-cultivation, hand-weeding, hand-planting, and hand-harvesting of vegetables, nuts, fruits, seedings, or other crops (including mushrooms);

(B) Hand packing or sorting, whether done on the ground, on a moving machine, or in a temporary packing shed in the field; and

(C) Except for purposes of **(6)**, operation of vehicles or machinery, when such activity is in conjunction with other hand-labor operators.

Handwashing facility – means a facility providing either a basin, container, or outlet with a adequate supply of potable water, soap, and single-use towels.

Potable water – means water that meets the quality standards in 42 CFR Part 72, U.S. Public Health Service Drinking Water Standards, or water approved for drinking by the state or local authority with jurisdiction, or water that meets the quality standards in OAR 437-004-1105, Sanitation.

Toilet facility – means a fixed or portable facility designed for adequate collection and containment of the products of both defecation and urination. Toilet facility includes biological, chemical, flush, and combustion toilets and sanitary privies.

(4) General requirements.

(a) Agricultural employers must provide and pay for everything required by this section for employees doing hand-labor operations in the field.

(5) Potable drinking water.

(a) Provide potable water that is available immediately to all employees.

(b) The water must be suitably cool and in sufficient amounts, taking into account the air temperature, humidity, and the nature of the work, to meet the needs of all employees.

(c) Dispense water in single-use drinking cups or by angle jet fountains. Do not use common drinking cups or dippers.

(6) Toilet and handwashing facilities.

(a) Provide one toilet facility and one handwashing facility for each twenty (20) employees or fraction thereof.

(b) Toilet facilities must have adequate ventilation, appropriate screens, self-closing doors that close and latch from the inside and ensure privacy.

(c) Maintain privies and portable toilets as follows:

(A) Structures must be free of hazards, in good repair and be stable.

(B) Except for urinals, multiple units must have separate compartments with doors with inside latches to ensure privacy.

(C) Seats must have lids that raise to allow use as urinals.

(d) Privies and portable toilets built after the effective date of these rules must comply with the rules of the Department of Environmental Quality.

(e) Provide toilet facilities for each sex, where practicable. Distinctly mark them "women" and "men" in English and in the native language of employees expected to work in the fields or with easily understood pictures or symbols.

(f) The employer must ensure that for each toilet facility:

(A) There is enough toilet paper to meet the workers' needs during the shift; and

(B) There are toilet paper holders or dispensers for each seat.

(g) Locate toilet and handwashing facilities adjacent to each other and no more than a five-minute or a one-quarter-mile (1320 feet) unobstructed walk from each hand laborer's place of work in the field.

(h) Where, due to terrain, it is not feasible to locate facilities as in (g) above, the facilities must be at the point of closest vehicular access.

(7) Maintenance.

(a) Potable drinking water and toilet and handwashing facilities must comply with appropriate public health sanitation practices.

(b) Drinking water containers must be made of materials that maintain water quality. Refill them daily or more often as necessary and keep them covered and clean.

(c) Toilet facilities must work and be clean, sanitary and safe.

(d) Empty and recharge chemical toilets prior to the start of each season of operation and at least every six months thereafter during use or when the tank is three-quarters full, whichever occurs first.

(e) Where crops intended for human consumption are produced, toilets must not contaminate crops.

(f) Refill handwashing facilities with potable water as necessary to ensure an adequate supply and maintain them in a clean and sanitary condition.

(g) Disposal of wastes from facilities, including handwashing water and towels, must not cause unsanitary conditions or contamination of crops.

(8) Field sanitation notice.

(a) Employers that grow or harvest food crops for human consumption must post a notice describing the requirements of these rules and advising where workers may file complaints regarding field sanitation matters. It must be in the language of the majority of the workers.

(9) Reasonable use.

(a) The employer must notify each employee of the location of the sanitation facilities and water, and allow each employee reasonable opportunities during the workday to use them. The employer must inform each employee of the importance of the following good hygiene practices to minimize exposure to the hazards in the field from heat, communicable diseases, retention of urine and agrichemical residues, including, but not limited to the following:

(A) Using the water and facilities provided for drinking, handwashing, and elimination;

(B) Drinking water frequently and especially on hot days;

(C) Urinating as frequently as necessary;

(D) Washing hands both before and after using the toilet; and

(E) Washing hands before eating and smoking.

437-004-1120 AGRICULTURAL LABOR HOUSING AND RELATED FACILITIES

(1) Application.

(a) These rules apply to any agricultural labor housing and related facilities defined in **(4)**.

(b) These rules apply to any type of labor housing and related facilities together with the tract of land, established, or to be established, operated or maintained for housing workers with or without families whether or not fees are paid or collected.

(c) These rules apply to, but are not limited to, tents, frame construction housing, trailers, and prefabricated structures defined in Oregon Revised Statutes (ORS) 455.010. Manufactured dwellings must comply with specifications for construction of sleeping places, unless they comply with ORS 446.155 to 446.185, that has the requirements and specifications for sanitation and safety design for manufactured dwellings.

(d) These rules apply to housing given to, rented, leased to or otherwise provided to employees for use while employed and provided either by the employer, a representative of the employer or a housing operator.

(e) These rules, unless otherwise stated, apply to all occupants of the labor housing and facilities.

(f) These rules apply to all labor housing sites owned, operated, or allowed to operate on property under the jurisdiction of any state or municipal authority.

(2) Exemptions.

(a) Housing including tents, vehicles, mobile homes, and trailers owned or provided by employees for their own use are not subject to these rules. When the employee provides their own housing, the housing operator is responsible for the provision and maintenance of all other services.

(b) These rules do not apply to accommodations subject to licensing as mobile home parks, organizational camps, traveler's accommodations or recreation parks.

(c) Mobile homes and trailers being moved regularly from place to place because of the work are exempt from these rules except when at parks or camps meant for parking mobile vehicles.

(3) Scope. These rules apply to any labor housing and related facilities defined in **(4)** used in relationship to agricultural employment.

(4) Definitions.

Clean means the absence of soil or dirt or removal of soil or dirt by washing, sweeping, clearing away, or any method appropriate to the material at hand.

Division means the Oregon Occupational Safety and Health (OR-OSHA) Division of the Department of Consumer and Business Services.

Facility means a sleeping place, drinking water installation, toilet installation, sewage disposal installation, food handling installation, or other installation required for compliance with the labor housing and related facility rules.

Garbage means food wastes, food packaging materials or any refuse that has been in contact with food stuffs.

Housing site is a place where there are sleeping places.

Labor housing and related facilities is any place, area or piece of land where there are sleeping places or housing sites provided by an employer for their employees or by another person, including a housing operator providing accommodations for employees.

Local public health administrator is the administrator defined in ORS 431.418 for the county or district where there is labor housing and related facilities.

Operator means a person holding legal title to the land where there is housing and related facilities. However, if the legal title and the right to possession are with different persons, "operator" means a person with the lawful control or supervision over the labor housing under a lease or otherwise.

Potable water is water meeting the bacteriological and other requirements in OAR 437-004-1105, Division 4/J, Sanitation.

Refuse includes waste materials such as paper, metal, discarded items, as well as debris, litter and trash.

Sanitary means free from agents that may be injurious to health.

Sewage means the water-carried human and animal wastes, including kitchen, bath, and laundry wastes from residences, buildings, industrial establishments, or other places, together with such ground-water infiltration, surface waters, or industrial wastes as may be present.

Sleeping place is any room, structure, shelter, tent, trailer house, vehicle or other place housing one or more persons. Sleeping place is not limited to a place for sleeping only but includes the entire area where one or more persons are housed.

Toilet room is a room in or on the premises of any labor housing, with toilet facilities for use by employees and occupants of that housing.

(5) Housing registration requirements.

(a) Each year, before occupancy, you must register all labor housing and related facilities or facilities with OR-OSHA as set out below. Follow these mandatory steps:

(A)

(i) The operator must contact OR-OSHA at least 45 days before the first day of operation or occupancy of the housing and related facilities. You will receive information with further instructions to follow.

(ii) If your housing and related facilities were not registered in the previous year, call OR-OSHA to request a consultation visit to your housing. OR-OSHA will register housing and related facilities not previously registered only after a pre-occupancy consultation that finds the housing or facility to be substantially in compliance with all applicable safety and health rules.

(iii) If there were significant changes in the circumstances of the housing or facilities since the last registration, OR-OSHA may, at its discretion, refer the employer for a consultation prior to re-registering the housing and facilities.

(iv) Once registered, the operator must display the registration certificate provided by OR-OSHA in a place frequented by employees. The operator must also provide and display a translation of the certificate in the language or languages used to communicate with employees.

(B) The Director may revoke a labor housing and related facilities registration for the following reasons:

(i) Making any material misrepresentation, false statement or willful concealment in the application for registration.

(ii) Conditions under which the registration was accepted no longer exist or have changed, or

(iii) OR-OSHA determines that the housing and related facilities are substantially out of compliance with the applicable safety and health rules.

(C) Any group or individual may protest the proposed registration or renewal of any labor housing and related facilities under the following conditions:

(i) The signed and dated protest must be submitted in writing and received by the Director prior to issuance of the registration or renewal.

(ii) The protest must include the name, address and phone number of the individual or group filing it.

(iii) The protest must clearly identify which housing and related facilities is the subject of the protest, including the exact physical location and name of the applicant.

(iv) The protest must clearly state the facts and reasons for the protest. Such facts and reasons must be based on factors which are within the scope or ORS 654 and any regulations adopted thereunder

(6) Site.

(a) All sites must be large enough to prevent overcrowding of necessary structures.

(b) Keep the grounds of labor housing and related facilities clean, sanitary, free from waste water, sewage, garbage, litter, refuse and noxious plants such as poison oak and poison ivy.

(c) Keep grass, weeds and brush cut during operation.

(d) All housing site land must have adequate drainage and not be subject to flooding when occupied.

(e) Do not locate housing and related facilities within 200 feet of swamps, pools, sink holes, unless there are effective mosquito control measures.

(f) Locate all labor housing and related facilities on well-drained ground. Grade, ditch, or render free from depressions where water can stand.

(g) Adequately dispose of the waste water and spillage under outside water hydrants.

(h) Prevent or control the breeding of mosquitos, flies, and rodents in the immediate housing area and in the barns, pens, feed yards, or similar livestock or poultry areas within 200 feet of any labor housing and related facilities owned or under lawful control or supervision of the operator.

(i) The operator of a labor housing is responsible for the daily maintenance and operation of the housing and its facilities.

(j) Store all toxic materials such as pesticides, fertilizers, paints and solvents in a safe place accessible only to authorized occupants.

(k) Do not leave empty containers such as drums, bags, cans, or bottles that contained toxic materials in the immediate area. Dispose of them in an approved way to prevent exposure by the camp occupants.

(l) Do not keep poultry or livestock within approximately 200 feet of the immediate housing area during occupancy unless there are appropriate measures to prevent a sanitation or health hazard and to effectively eliminate flies and mosquitos.

(m) Provide electricity to all housing sites in labor housing and related facilities.

(n) All electrical wiring and lighting fixtures must comply with the Oregon Electrical Code.

(o) Provide each room in a sleeping place with a ceiling or wall-type electric light fixture in working order and at least one wall-type electrical outlet.

(p) Provide a ceiling or wall-type electric light in toilet rooms, lavatories, shower or bathing rooms, laundry rooms, hallways, stairways, or other hazardous dark areas.

(q) Light privies either directly as are other toilet rooms or indirectly from an outside light source.

(r) Provide enough light in corridors and walkways to allow safe travel at night.

(7) Water supply.

(a) All domestic water furnished at labor housing and related facilities must conform to the standards for purity in 437-004-1105, Division 4/J, Sanitation.

(b) Have a bacteriological analysis done on the water before occupancy and as often as needed to assure a potable water supply, except when the water comes from a community water system.

(c) Provide enough potable water in the labor housing area for drinking, handwashing, bathing and domestic use. Provide water for drinking and domestic uses within 100 feet of each sleeping place. An ample supply is at least 35 gallons of water per day per occupant.

(d) Arrange, construct and if necessary, periodically disinfect the water storage and distribution facilities to satisfactorily protect the water from contamination. (Install all plumbing in labor housing and related facilities to comply with ORS 447.140 and state regulations relating to plumbing and water supply and any applicable county or city plumbing code.)

(e) Do not use cups, dippers or other utensils for common drinking purposes.

(f) Drinking fountains at labor housing and related facilities must be angle-jet type with adequate water pressure at all times.

(g) Where water, unsafe for drinking purposes is accessible, post this water as "Unsafe for Drinking."

(h) Portable water containers with spigots and tight fitting lids are acceptable for providing and storing drinking water in the housing. These containers must be made of impervious non-toxic materials that protect the water from contamination. Wash them with soap or detergent and a suitable sanitizer at least every seven days.

(i) Do not use containers such as barrels, pails or tanks that require dipping or pouring to get the water.

(j) Do not allow cross connection between a system furnishing water for drinking purposes and a non-potable supply.

(k) In addition to requirements above, where applicable OAR 437-004-1105, Division 4/J, Sanitation, also applies.

(8) Laundry, handwashing, toilet, and bathing facilities.

(a) Provide an adequate supply of hot and cold water under pressure for all common use handwashing, bathing, and laundry facilities at all labor housing and related facilities.

(b) In installations with flush toilets, lavatory, bathing, or laundry facilities, the floor and walls must be of readily cleanable finish and impervious to moisture.

(c) Provide floor drains in all shower rooms to remove waste water and facilitate cleaning. Slope floors so they drain and do not use slippery materials for flooring.

(d) The walls and partitions of shower rooms must be smooth and impervious to moisture.

(e) Maintain all laundry, handwashing, bathing, and central facilities in a clean and sanitary condition.

(f) Provide at least one handwashing basin with hot and cold water under pressure for every 15 occupants. Locate them either adjacent to all toilet facilities or adjacent to the sleeping places. A twenty-four inch linear measurement of a "trough" type sink with an individual faucet equals one basin. Do not use a single common towel.

(g) If you provide paper towel, there must be a container for their disposal.

(h) Keep handwashing facilities clean and sanitary.

(i) Provide at least one shower head with hot and cold water under pressure for every 15 occupants of each sex. A plumbed-in bathtub will substitute for a shower head. Provide only one shower when housing a total of 9 or less persons of both sexes.

(j) Provide at least one toilet for every 15 occupants or fraction thereof for each sex in the labor housing. Provide one toilet when housing a total of 9 or less persons of both sexes.

(k) Keep toilet facilities in good repair, clean and sanitary.

(l) When public laundry and drying facilities are not available within five miles, the housing must have laundry and drying facilities, readily accessible for use by all occupants. Laundry facilities in the housing area must have trays or tubs, plumbed with hot and cold water under pressure in the ratio of 1 for each 25 occupants. Provide mechanical washers in the ratio of 1 to 50 occupants and one laundry tray per 100 occupants.

(m) Provide clothes lines or drying facilities to serve the needs of the occupants. Mechanical clothes dryers may be in the ratio of 1 per 50 occupants instead of clothes drying lines.

(n) Install privacy partitions between each individual toilet or toilet seat in multiple toilet facilities. The partitions may be less than the height of the room walls. The top of the partition must be not less than 6 feet from the floor and the bottom of the partition not more than 1 foot from the floor. The width of the partition must extend at least 1-1/2 feet beyond the front of the toilet seat. Provide a door or curtain so the toilet compartment is private.

(o) Ventilate all labor housing toilet rooms according to the State Plumbing Regulations (OAR Chapter 814, 21-280 through 21-290).

(p) Locate water closets, chemical toilets, or urinals in rooms built for that purpose.

(q) Provide all toilet facilities with toilet paper and holders or dispensers.

(r) Distinctly mark toilet and bathing facilities for each sex with "women" and "men" in English and in the native language of employees expected to occupy the housing or with easily understood pictures or symbols.

(s) Separate common use bathing or toilet facilities used for both sexes in the same building by a solid, non-absorbent wall extending from the floor to the ceiling.

(t) Maintain a usable path or walkway free of weeds, debris, holes or standing water from each sleeping place to the central toilet facilities.

(u) Locate toilet facilities in labor housing and related facilities less than 200 feet from the sleeping places that they serve and privies at least 50 feet from any sleeping place or any facility where food is prepared or served.

(v) The location and construction of privies must conform to OR-OSHA and Department of Environmental Quality standards.

(w) Keep privies in good repair, clean and sanitary.

(x) If urinals are in the toilet facility and where three or more toilets are required for men, one urinal substitutes for one toilet (24 inches of trough-type urinal equals one urinal), to a maximum of one-third of the total required toilets.

(y) Construct urinals with non-absorbent, non-corrosive materials that have a smooth and cleanable finish.

(9) Sewage disposal and plumbing.

(a) Connect the sewage disposal from the labor housing and related facilities to a community sewer system, a septic tank with subsurface disposal of the effluent, pit type privies or other sanitary means conforming to ORS 447.140 of the Department of Environmental Quality and to OAR 437-004-1105, Division 4/J, Sanitation.

(b) Install all plumbing in labor housing and related facilities to comply with ORS 447.140 of the Department of Environmental Quality and with state regulations relating to plumbing and water supply and applicable county or city plumbing code.

(10) Garbage and refuse disposal.

(a) Store all refuse in labor housing and related facilities, including garbage and kitchen wastes, in watertight containers that keep flies and rodents out.

(b) Keep refuse and garbage containers clean, sanitary and in good repair. There must be at least one 20-gallon or larger container per 15 occupants. Containers must be accessible to all occupants and never outside of the housing site.

(c) Remove all garbage and refuse at least once a week.

(d) Keep all refuse and garbage containers covered and the garbage storage area clean and free of flies and rodents.

(e) Do not burn any food garbage or wet refuse.

(f) Dispose of garbage and refuse according to the rules of the Section relating to solid waste disposal and to DEQ rules and regulations (ORS, Chapter 459 and OAR, Chapter 340) that govern the disposal of garbage and refuse as well as other solid wastes.

(11) Sleeping places.

(a) Keep all sleeping places, safe and sanitary and in good repair structurally. They must provide shelter for the occupants against the elements and exclude ground and surface water as well as rodents and insects.

(b) The walls and roof must be tight and solid. Floors must be rigid and durable, with a smooth and cleanable finish in good repair. If tents are sleeping places, they must have wood, asphalt or concrete floors that are smooth and of tight construction.

(c) Sleeping places occupied during October through May must have heating equipment capable of keeping a temperature of at least 68° F. They must always comply with applicable state and local fire, building and electrical regulations.

(d) All heating equipment must meet the following specifications:

(A) Install and vent any stoves or other sources of heat using combustible fuel to prevent fire hazards and dangerous concentration of gases. Do not use portable heaters other than those operated by electricity. Install a concrete slab, insulated metal sheet or other fire resistant material under a solid or liquid fuel stove when used in a room with wood or other combustible flooring and extend it at least 18 inches beyond the perimeter of the base of the stove.

(B) Install fire resistant material on any wall or ceiling within 18 inches of a solid or liquid fuel stove or a stove pipe. Provide a vented metal collar around the stovepipe, or vent passing through a wall, ceiling, floor or roof or combustible material.

(C) Heating systems with automatic controls must cut off the fuel supply on failure or interruption of the flame or ignition, or when a pre-determined safe temperature or pressure is exceeded.

(D) Install all gas appliances and gas piping to comply with the National Fire Protection Association (NFPA) Standard 54-1969.

(e) Provide screens of at least 16 mesh on the doors and windows of the sleeping places when flies or mosquitos are present. All doors with screens must be tight fitting, in good repair, and self closing. Screens are not necessary if there are adequate control measures that effectively eliminate flies and mosquitos.

(f) If tents are sleeping places, the tent body and screens must be sound. Except with respect to Wasco and Hood River counties, treat the tents with an effective water-proofing material as often as necessary to maintain the tent's waterproof quality. The tents must have adequate screens to effectively keep out flies and mosquitos. Do not use tents for housing between the months of October through May.

(g) Provide beds, bunks or cots for each occupant and suitable storage facilities such as wall lockers for each occupant or family unit.

(h) Furnished mattresses must be clean, in good repair, and free from insects and animal parasites. Treat all mattresses with an effective insecticide or fumigate and store in a clean, dry place after the facility closes.

(i) Space the beds, bunks or cots so that there is enough room between them to allow for rapid and safe exiting during an emergency. Elevate beds approximately 12 inches off the floor.

(j) Nothing in this standard prohibits "banking" where floors are elevated with earth or other suitable material around the outside walls in areas subject to extreme low temperatures.

(k) Each room without double bunk beds must have at least 50 square feet of floor space per employee and at least one half of the floor area must have a minimum ceiling height of 7 feet, with the following exceptions:

(A) If employees are members of the same nuclear family (defined as a mother and father, their combined children and grandparents), provide space as follows:

(i) Full space for the first employee over twelve.

(ii) 3/4 space for each additional occupant over twelve, whether or not they are an employee.

(iii) 1/2 space for children under twelve, whether or not they are an employee.

(B) In rooms where workers cook, live, and sleep provide at least 60 square feet of floor space per occupant. Where the same nuclear family is living apply the adjustments from (A) above.

(C) In housing and related facilities built after August 1, 1975 where workers cook, live, and sleep provide at least 100 square feet per occupant. Where the same nuclear family is living apply the adjustments from (A) above.

(l) In rooms used for sleeping only, where there are double bunk beds, provide 40 square feet per occupant. Do not use triple bunks.

(m) Provide separate private areas for sleeping for each sex that is unrelated and for each family.

(n) Provide a window or skylight that opens directly to the outside, except where there is mechanical or other ventilation, for each habitable room. Windows that meet the requirements of fire exits are also acceptable for ventilation.

(o) Before occupancy sweep and clean all sleeping places and eliminate any rodents, insects, and animal parasites.

(12) Fire protection.

(a) All fires must be in equipment designed for that use. Do not allow open fires in the area. Do not locate stoves or combustion heaters so they block escape from a sleeping place. All labor housing and related facilities must have a mechanical means of arousing the occupants in the event of danger from fire or other emergency.

(b) Provide fire extinguishing equipment in a readily accessible place, not more than 100 feet from each housing unit. The equipment must provide protection equal to a 2-1/2 gallon stored pressure or a 5-gallon pump-type water extinguisher.

(c) All sleeping places built with one door, except tents, vehicles, and trailers houses owned by the occupants, must have, in addition to a door, a window than can be an exit in case of fire. This window must have an openable space at least 24 inches by 24 inches. The lowest portion of the opening must be less than 48 inches above the floor. This window must open directly to the outdoors and be readily openable by the occupants from inside without breaking the glass. This window must be in a wall different than the outside door to the unit. If the living unit has more than one room, the exit window must be in a room other than the one having the outside door and be clearly marked as a fire exit.

(d) Construct and maintain all sleeping places in labor housing and related facilities to comply the applicable local and state fire and safety laws and regulations.

(e) A second story must have at least two exits when the occupant load is 10 or more. Comply with the Uniform Building Code Chapter 33, Section 3303.

(f) Occupants on floors above the second story and in basements must have access to at least two separate exits from the floor or basement as required by the Uniform Building Code Chapter 33, Section 3303.

(13) Cooking, eating, and dining facilities.

(a) If the operator or a concessionaire prepares the food or if the occupants use a common preparation area, the facilities for preparation and serving must comply with ORS Chapter 624, administered by the Oregon Health Division.

(b) When not using a concessionaire or central facility, each sleeping place must have a separate area for use as a kitchen and eating area with the following:

(A) A mechanical refrigerator, capable of keeping food at or below 45° F;

(B) A stove or hot plate large enough to serve the intended number of occupants. If within 18 inches of a wall, that wall must be made of or finished with smooth cleanable, non-absorbent, grease resistant and fire resistant material;

(C) Food storage shelves and a food preparation area made of or finished with smooth, non-absorbent, cleanable material; and

(D) A table and chairs or equivalent seating and eating arrangements to accommodate the number of occupants living in the sleeping place.

(E) The refrigerator and stove or hot plate must always be in working condition. Clean the facilities before each occupancy.

(14) Reporting communicable diseases.

(a) The operator of the labor housing and related facilities must notify the local public health administrator and OR-OSHA immediately if an individual housed in the housing is known to have or is suspected to have any communicable disease or illness. Include the name and address of the person in the report.

(b) If there is an outbreak of suspected food poisoning or an unusual prevalence of any illness in which fever, diarrhea, sore throat, vomiting or jaundice is a prominent symptom, the operator must immediately report the outbreak or unusual prevalence to the local public health administrator and OR-OSHA.

(15) First aid.

(a) OAR 437-004-1305, Medical and First Aid, applies to all labor housing and related facilities. This rule includes requirements for first aid supplies, an emergency medical plan and a plan of communication.

NOTE: Division 4/K requires all employees know about the first aid requirements and emergency medical plans. If employees' native language is other than English, this must be taken into account in meeting this requirement.

(16) Access to ORS and OAR.

(a) Those wishing access to any of the Oregon Revised Statutes (ORS) or Oregon Administrative Rules (OAR) referenced here, may contact the OR-OSHA Central Office (Resource Center) or nearest Field Office.

(17) Closure and alternative housing.

(a) The operator of agricultural labor housing must provide replacement lodging without charge to the occupants if a government agency with the authority to enforce building, health or safety standards declares the housing or facilities to be uninhabitable and orders them vacated.

(b) The operator must provide replacement lodging for seven consecutive days from the time the housing was closed or until the closing agency allows the original housing to re-open, whichever is shorter.

(c) Replacement lodging must meet or exceed the health and safety standards of Oregon OSHA.

(d) Operators must arrange for replacement lodging not later than the end of the day the original housing closes.

(e) Post the address of the replacement lodging as soon as it is available. The posting must be in a place convenient to affected workers and in all languages spoken by the occupants.

(f) When the cause of the closure is beyond the control of the agricultural labor housing operator, sections (a), (b), (c), (d) and (e) do not apply. To determine whether the cause of closure was beyond the control of the operator, Oregon OSHA will consider these circumstances, including but not limited to:

(A) Whether the cause of the closure is a natural disaster;

(B) Whether the circumstances leading to the closure were known or should have been known to the operator;

(C) Whether operator diligence could have avoided the circumstances leading to the closure.

(g) Agricultural labor housing occupants entitled to temporary replacement housing under this rule must accept or reject that housing when the original housing closes. These rules do not obligate operators to reimburse displaced occupants for housing they obtain without the operator's knowledge or consent.

(A) The operator is responsible for replacement lodging only for as many people as occupied the original housing. OR-OSHA will make an occupancy determination at the time the original housing is closed.

(18) Recreation area. **(Note:** the following is only a recommendation.)

(a) The Oregon Occupational Safety and Health Division strongly recommends for the health and safety of the occupants, especially children, that labor housing have a recreational area. This area should be separate and protected from main thoroughfares and automobile parking, be clear, level and planted in grass, or prepared in a way that it can be used by the occupants for recreational purposes. The area should be free of hazards and debris and provide at least 100 square feet of area for each housing unit occupied by children under 14 years of age. The total recreational area should not be less than 2,500 square feet. Keep recreational equipment in good repair.

NOTE: Rules on Field Sanitation are in OAR 437-004-1110, Field Sanitation.

437-004-1140 LIGHTING

(1) General lighting.

(a) Provide adequate general and local lighting in rooms, buildings and work areas.

(b) Methods for determining the adequacy and effectiveness of lighting include:

(A) Measure the quantity of light against requirements in the American National Standard ANSI A11.1-1965, "American Standard Practice for Industrial Lighting."

(B) The quality of light as to freedom from glare and correct direction, diffusion and distribution.

(c) Keep all skylights, windows, lamps and other things that provide or allow adequate light clean and working.

437-004-1150 SAFETY COLORS FOR MARKING PHYSICAL HAZARDS

(1) Color identification.

(a) Red. Use red as the basic color to identify:

(A) Danger. Safety cans or other portable containers of flammable liquids must be red with highly contrasting markings. Provide red lights at barricades and at temporary obstructions. The main or background color of danger signs must be red.

(B) Stop. Emergency stop bars on hazardous machines must be red. Use red for emergency stop buttons or emergency electrical switches with contrasting letters or other markings.

(b) Yellow. Yellow is the basic color to signal caution and to mark physical hazards such as: Striking against, stumbling, falling, tripping, and "caught between."

437-004-1180 ACCIDENT PREVENTION SIGNS

(1) Scope.

(a) This section applies to the design, application and use of signs or symbols (as included in paragraphs **(3)** through **(5)**) to warn of specific hazards. This does not apply to bulletin boards or safety posters.

(2) Definitions.

(a) Sign – A surface marked to warn people of hazards, or to give safety instructions. Excluded are news releases, safety posters and bulletins.

(3) Classification of signs by use.

(a) Danger signs.

(A) Use signs of uniform design to warn of specific dangers and radiation hazards.

(B) Instruct all employees that danger signs warn of immediate danger and that special precautions are necessary.

(b) Caution signs.

(A) Use caution signs only to warn of hazards or to caution against unsafe practices.

(B) Instruct all employees that caution signs warn of a hazard against which they should take precautions.

(c) Safety instruction signs. Use safety instruction signs for general instructions and suggestions about safety.

(4) Sign design.

(a) Design features. Use signs with rounded or blunt corners and no sharp edges, burrs, splinters or other sharp projections. Place the ends or heads of bolts or other fastening devices so that they are not hazardous.

(b) Danger signs. The color of the background must be red.

(c) Caution signs. The color of the background must be yellow and the panel, black with yellow letters. Use black letters against the yellow background.

(d) Safety instruction signs. Use white for the background and make the panel green with white letters. Any letters used against the white background must be black.

(e) Slow-moving vehicle emblem. This emblem (see fig. 7) has a fluorescent yellow-orange triangle with a dark red reflective border. The reflective border defines the shape of the fluorescent color in daylight and creates a hollow red triangle in the path of motor vehicle headlights at night.

(A) Use this emblem only on vehicles that by design move at 25 m.p.h. or less on public roads. Do not use it as a clearance marker for wide machinery to replace required lighting or marking of slow-moving vehicles. The material, location, mounting, etc., of the emblem must conform to the American Society of Agricultural Engineers Emblem for Identifying Slow-Moving Vehicles, ASAE R276, 1967, or ASAE S276.2 (ANSI B114.1-1971).

(5) Sign wordings.

(a) Nature of wording. Use wording on signs that is easily understandable.

(b) Biological hazard signs. Use the biological hazard warning sign to warn of the actual or potential presence of a biohazard. Use it to mark equipment, containers, rooms, materials, experimental animals or combinations of them, that contain or are contaminated with viable hazardous agents. For this subparagraph the term "biological hazard," or "biohazard," means only those infectious agents presenting a risk or potential risk to the well-being of humans.

Note: All dimensions are in inches.

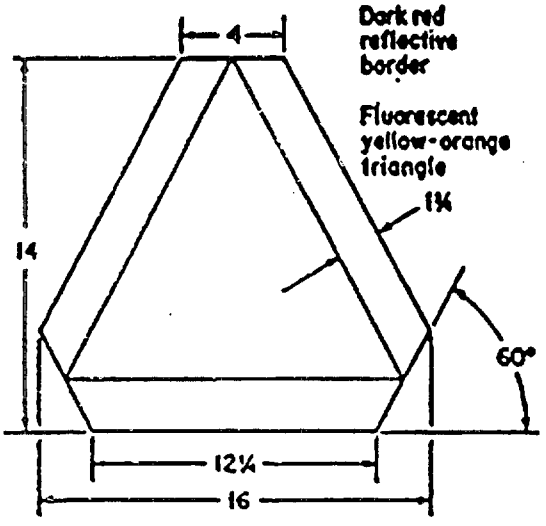

Figure 7. Slow-Moving Vehicle Emblem

437-004-1250 CONFINED AND HAZARDOUS SPACES

(1) Definitions.

Competent person is somebody who can identify existing and predictable hazards and take measures to eliminate them.

Confined space is a space that:

is large enough and so configured that an employee can bodily enter and work; and

has limited or restricted entry or exit (for example, tanks, vessels, silos, storage bins, hoppers, vaults, and pits may have limited entry); and

is not designed for continuous employee occupancy.

Engulfment is the covering of a person by a liquid or finely divided (flowable) solid substance that when inhaled causes death or that can exert enough force on the body to cause death by strangulation, constriction or crushing.

Entry is passing through an opening into a hazardous or confined space. Entry includes work in the space and occurs when any part of the entrant's body breaks the plane of an opening into the space.

IDLH Atmospheres. Atmospheres immediately dangerous to life or health (IDLH) are those with less than 19.5 percent oxygen by volume, or which because of the high toxicity of the contaminant, would endanger the life of a person breathing them for even a short period of time.

Oxygen deficient is an atmosphere with less than 19.5 percent oxygen by volume.

(2) Fuel bins.

(a) Fuel bins must have adequate exits and all necessary devices to provide safety for employees who enter them.

(b) There may be sentry stations or tunnels near the bottom conveyor for employees to use to stoke down congested fuel through openings. Safely built pneumatic bottoms, mechanical agitators or scrapers and similar devices are acceptable.

(3) Entering confined spaces.

(a) Test first. Always test the atmosphere in a confined space before an employee places any part of their body into it. Following the instructions below, test first for oxygen, then flammable atmosphere then toxic atmosphere.

(b) Entry. No person will enter or work in any confined space with an atmosphere immediately dangerous to life or health, except under the following conditions:

(A) They must wear a supplied air or self-contained air breathing apparatus;

(B) They must wear a safety belt with lifeline attached, where practical. Another person, equipped as required in subsection **(3)(b)(A)** and with safety belt and lifeline attached, must be at the opening with adequate help available to remove the person if necessary (see **(5) Rescue** below);

(C) Failure of the person within the enclosure to respond to agreed upon signals must require immediate rescue action by a person or persons equipped as required in subsections **(3)(b)(A)** and **(B)**;

(D) Air supplied to hose masks and positive pressure air helmets must be free from harmful dusts, fumes, mists, vapors, or gases to the extent that breathing it does not constitute harmful exposure. Position the air intake to the blower fan or compressor to prevent contamination of the air by carbon monoxide or other hazardous materials or gases;

(E) Supplied air respiratory equipment must have an automatic pressure relief valve, and connect through a pressure reduction valve in the supply line. Maximum allowable pressure, unless otherwise specifically approved, is 25 pounds per square inch;

(F) To assure safety when using positive-pressure air respiratory equipment, a minimum volume of air delivered to the user must be at least 4 cubic feet of air per minute for a face mask and 6 cubic feet of air per minute for hoods or helmets.

(c) Oxygen deficient atmospheres. The atmosphere in a sealed or unventilated confined space is considered immediately dangerous to life or health. Nobody will enter such space unless:

(A) All requirements for safety equipment and procedures in **(3)(b)** are met; or

(B) A competent person tests the atmosphere with an oxygen indicator or other suitable device immediately before entry to ensure that it contains enough oxygen to sustain life; or

(C) Until mechanical ventilation provides at least one complete change of uncontaminated air immediately before entry and continues while anybody is inside the enclosure. A safety watcher meeting the requirements in **(3)(b)** must be at the entry.

(d) Toxic atmospheres. Nobody will enter any sealed or unventilated tank or other confined space that contains or has contained toxic materials or gases, unless:

(A) All requirements for safety equipment and safety procedures in **(3)(b)** are met, or a competent person tests the atmosphere with an appropriate instrument or method and finds it to have contaminants below the threshold limit values of the particular material or gas.

(B) If the atmosphere has concentrations of hazardous contaminants not immediately dangerous to life or health, but above the threshold limit values for the toxic material, the person entering the space must wear respiratory protective equipment approved by the National Institute of Occupational Safety and Health, or recommended by the U.S. Department of Agriculture for the exposure.

(e) Flammable or explosive atmospheres. The atmosphere in any sealed or unventilated tank or other confined space and that contains or has contained combustible or flammable materials or gases is an atmosphere immediately dangerous to life or health.

(A) Nobody must enter such space unless all requirements for safety equipment and safety procedures in **(3)(b)** are met or atmosphere tests by a competent person using an appropriate instrument or method shows no flammable or explosive atmosphere is present.

(B) If the atmosphere contains flammable or explosive vapors at or above 20 percent of their lower explosive limit, ventilate the space enough to bring the level below 20 percent of the lower explosive limit. Otherwise only persons meeting the requirements of **(c)** may enter the enclosure for emergency work, including preparatory work or work to set up equipment to eliminate the gas.

(f) Ventilation. Natural and/or mechanical ventilation must maintain the atmosphere within the limits permissible for explosive or toxic materials and gases while employees are in the space.

(g) Residues and other sources. When there could be a release of explosive or toxic materials from residues or other sources in a confined space, there must be additional testing as necessary to assure the atmosphere has not become immediately dangerous to life or health. If such conditions arise, immediately leave the contaminated space until the atmosphere is safe for persons wearing respiratory protective equipment.

(h) Physical hazards. Do not allow employees to enter confined spaces that contains physical hazards, until you comply with OAR 437-004-1275.

(i) Engulfment. Do not allow employees to enter confined spaces where there is a hazard from engulfment by collapsing material.

(j) Lifeline and attendant. When entering confined spaces that have loose material (such as chips, sand, grain, gravel, sawdust, etc.) you must wear a safety belt with lifeline. There must be an attendant for the lifeline.

(k) Lockout/tagout. Follow the procedures of OAR 437-004-1275, for intake pipelines that convey hazardous substances into confined spaces before workers enter. Blinds, if used, must clearly show whether the line is open or closed. Close, lock and attach warning tags to valves in such lines nearest the containers. Blinding or lockout of cold water and air lines is not necessary if they have positive control valves near the container and you lock, close and tag the valves.

(4) Training.

(a) Train all workers before they do anything covered by this section. Retrain workers when there are changes in their duties or the spaces related to this section.

(b) Training must cover all hazards associated with the employer's confined and hazardous spaces.

(c) Training must cover this standard and all duties associated with it.

(d) Keep written documentation of all training until it is superseded by new training.

(5) Rescue.

(a) These requirements apply to employers who have employees enter confined spaces to rescue people.

(A) You must give each rescuer the personal protective equipment and rescue equipment necessary to make rescues from hazardous spaces. You must also provide training on the proper use of that equipment.

(B) Train each rescuer in basic first-aid and in cardiopulmonary resuscitation (CPR). At least one rescuer with current certification in first aid and in CPR must be available.

(b) When you arrange to have persons other than their own employees do confined space rescue, the employer must:

(A) Inform the rescue service of the hazards they may confront during the rescue at the host employer's facility, and

(B) Provide the rescue service with access to all confined spaces from which rescue may be necessary so that the rescue service can develop appropriate rescue plans and practice rescue operations.

(c) To accomplish non-entry rescue, attach the other end of the retrieval line to a mechanical device or fixed point outside the hazardous space in a way that rescue can begin as soon as the rescuer becomes aware that rescue is necessary.

437-004-1260 PONDS, SEPARATORS AND OTHER HAZARDOUS AREAS

(1) Scope. This applies to facilities not covered by grain handling or confined space rules. (Examples include pole buildings used to store compost material or manure ponds and separators.)

(2) General.

(a) Do not enter any pond, separator or other hazardous area where the atmosphere may be immediately dangerous to life unless:

(A) Tests by a competent person, immediately before entry, prove it free of toxic gases and with enough oxygen to sustain life; or

(B) Mechanical or natural ventilation provides at least one complete change of uncontaminated air immediately before entry and continues during enclosure occupancy; or,

(C) The person entering the area is using a properly functioning supplied air or self-contained breathing apparatus, and is closely supervised by a safety watcher with similar equipment, at the entrance. They must have adequate help to remove the person if necessary.

(b) Ponds that have hazardous materials, manure or that are more than 4' deep, must meet one of the following requirements:

(A) A cover or grating must be in place and strong enough to safely support imposed loads; or

(B) The edges must extend at least 42" above the adjacent floor level; or,

(C) There is a standard guardrail. Where vehicles operate near ponds the railing must be strong enough to keep them out of the pond, or there must also be a curb or shear rail that keeps the vehicle out of the pond.

437-004-1275 THE CONTROL OF HAZARDOUS ENERGY (LOCKOUT/TAGOUT)

(1) Scope.

(a) This standard covers work on machines, vehicles and equipment when the unexpected energizing or starting of them, or release of stored energy could injure employees.

(2) Application.

(a) This standard applies to the control of energy during servicing and/or maintenance of machines and equipment.

(b) It does not cover normal production operations. It covers servicing and/or maintenance that takes place during normal production operations only if:

(A) An employee must remove or bypass a guard or other safety device; or

(B) An employee must place any part of the body where they do work on the material being processed (point of operation) or where a danger zone exists.

(c) It does not cover routine, repetitive minor tool changes, adjustments and other minor servicing activities, done during normal operations, if they are necessary to the use of the equipment and if the workers use alternative methods that provide effective protection.

(d) This standard **does not apply** to work on electric powered equipment, when unplugging it would control the hazard and the employee doing the work controls the plug totally. It also does not apply to work on vehicles when the person doing the work has the ignition key under their exclusive control and there are no other sources of hazardous energy that could be released without the key.

(3) Program requirement.

(a) Employers must establish an energy control program and use its procedures for putting appropriate lockout or tagout devices on energy isolating devices. They must disable machines or equipment to prevent injury to employees.

(4) Definitions.

Affected employee. One who operates a machine or equipment during service or maintenance under lockout or tagout. Also, those who work near where covered servicing or maintenance is done.

Authorized employee. One who locks out or tags out machines or equipment to service or maintain them. An affected employee becomes an authorized employee when they do service or maintenance covered here.

Energized. Connected to an energy source or containing residual or stored energy.

Energy isolating device. A mechanical device that physically prevents the transmission or release of energy. Examples: A manual circuit breaker; a switch; a manual switch that disconnects the conductors of a circuit from all ungrounded supply conductors and where employees can operate no pole independently; a line valve; a block; and any similar device used to block or isolate energy. Push buttons, selector switches and other control circuit type devices are not energy isolating devices.

Energy source. Any source of electrical, mechanical, hydraulic, pneumatic, chemical, thermal, gravity or other energy.

Lockable. An energy isolating device with its own lock or with a hasp or other way to attach a lock. Other energy isolating devices are lockable if they can be locked without being dismantled, rebuilt or replaced or permanently altering their energy control capability.

Lockout. The use of a lockout device on an energy isolating device, according to an established procedure to ensure that the controlled equipment is not operable until an authorized employee removes the lockout device.

Lockout device. Something that uses a positive means such as a lock, to hold an energy isolating device in a safe position. Included are blank flanges and bolted slip blinds.

Normal operations. A machine or equipment doing its intended function.

Servicing and/or maintenance. Constructing, installing, setting up, adjusting, inspecting, modifying, and maintaining and/or servicing machines or equipment. This includes removing jams, lubrication or cleaning of machines or equipment and making adjustments or tool changes, where the process may expose the employee to the unexpected energizing or starting of the equipment or release of hazardous energy.

Setting up. Any work done to prepare a machine or equipment for operation.

Tagout. The placement of a tagout device on an energy isolating device, according to an established procedure, warning employees not to operate the energy isolating device and the equipment being controlled until an authorized person removes the tagout device.

Tagout device. A prominent warning device, such as a tag and a secure, sturdy means of attachment to an energy isolating device according an established procedure. The tag must warn employees not to operate the energy isolating device and the equipment being controlled until an authorized employee removes the tagout device.

(5) General.

(a) Energy control program. Before doing any servicing or maintenance the employer must have a written energy control program with specific procedures, employee training and periodic reviews. It must ensure isolation of the equipment from the energy source and make it inoperative in a way to prevent injury.

(b) Lockout/tagout.

(A) If an energy isolating device is not lockable, the energy control program must use a tagout system that provides as much employee protection as is possible.

(B) If the energy isolating device is lockable, the energy control program must use lockout.

(C) Major repair, renovation or modification of a machine or equipment or installation of new machines or equipment requires new energy isolating device(s) to be lockable.

(c) Employee protection.

(A) When using a tagout device on a lockable energy isolating device, attach the tagout device where you would have put the lockout device.

(B) Full compliance with all parts of this standard related to tagout is necessary to assure the highest safety levels. Additional steps that help provide high employee protection include the removal of an isolating circuit element, blocking of a controlling switch, opening of an extra disconnecting device or the removal of a valve handle.

(d) Energy control procedure.

(A) Develop, document and use procedures for the control of potentially hazardous energy when employees are doing work covered by this section.

Note: Documenting the required procedure for a particular machine or equipment is not necessary when all of the following are true:

The machine or equipment has no potential for stored or residual dangerous energy or accumulation of stored dangerous energy after shut down;

The machine or equipment has an easily identified and isolated single energy source;

The isolation and locking out of that energy source will eliminate all energy-related hazards;

The machine or equipment is isolated from that energy source and locked out during servicing or maintenance;

A single lockout device will achieve a locked-out condition;

The lockout device is under the exclusive control of the authorized employee doing the servicing or maintenance;

The servicing or maintenance does not create hazards for other employees; and

No accidents have happened that involve the unexpected activation or energizing of the machine or equipment during servicing or maintenance done under this exception.

(B) The procedures must specifically outline the scope, purpose, authorization, rules and methods that are mandatory for the control of hazardous energy. They must also include a way to enforce compliance including, but not limited to, the following:

(i) A specific statement of the intended use of the procedure;

(ii) Specific procedural steps for shutting down, isolating, blocking and securing machines or equipment to control hazardous energy;

(iii) Specific procedural steps for the placement, removal and transfer of lockout or tagout devices and the responsibility for them; and

(iv) Specific requirements for testing a machine or equipment to verify the effectiveness of lockout devices, tagout devices and other energy control measures.

(e) Protective materials and hardware.

(A) Each employee's lock must have either a key or combination that is **unique** to that device.

(B) The employer must provide the necessary locks and/or hardware to do all required lockout/tagout functions.

(C) Individually identify each lockout and tagout device. They must be the only devices used for controlling energy. Do not use devices meant for the lockout program for other purposes. They must meet the following requirements:

(i) Durable.

(I) Lockout and tagout devices must withstand their environment.

(II) Make tagout devices so that exposure to weather conditions or wet and damp locations will not cause them to deteriorate or the message on them to become illegible.

(III) Tags must not deteriorate in corrosive environments such as where you handle or store acid and alkali chemicals.

(ii) Standardized. Use lockout and tagout devices whose appearance is uniform within the facility and easily recognized.

(iii) Substantial.

(I) Lockout devices. Lockout devices must be sturdy enough to prevent removal without the use of excessive force or unusual methods or tools.

(II) Tagout devices. Tagout devices and their means of attachment, must be sturdy enough to prevent inadvertent or accidental removal. The attachment means must be single use and self-locking.

(iv) Identifiable. Lockout and tagout devices must show the identity of the employee who applied them.

(D) On energized machines or equipment, tagout devices must warn against hazardous conditions and must include a phrase like: Do Not Start, Do Not Open, Do Not Close, Do Not Energize, Do Not Operate.

(f) Annual Review.

(A) Do a review of the energy control program at least annually to ensure that it meets the requirements of this standard and employees are following it.

(i) An authorized employee, other than the ones(s) using the energy control procedure being reviewed, must do the review.

(ii) Correct problems found during the review.

(iii) For a lockout program, the review must include a personal review, between the inspector and each authorized employee, of that employee's responsibilities under the program.

(iv) For a tagout program, the review must include a personal review, between the inspector and each authorized and affected employee, of that employee's responsibilities under the program.

(B) Document these reviews in writing with the identity of the machine or equipment covered by the program, the date of the review, the employees included in the review, and the person doing it.

(g) Training and communication.

(A) Provide general training that includes the following:

(i) Train authorized employees in the recognition of sources of hazardous energy, the type and amount of energy found in their workplace and the methods of energy isolation and control.

(ii) Instruct affected employees in the purpose and use of the energy control program.

(iii) Instruct other employees who work or may work where there may be energy control procedures, about those procedures and about the prohibition against attempts to restart or energize locked out or tagged out machines or equipment.

(B) For tagout systems, provide the following additional training:

(i) Locks are physical restraints while tags are only warning devices that provide less protection than locks.

(ii) Do not remove a tag attached to an energy isolating means, without authorization of the authorized person responsible for it. Never bypass, ignore or otherwise defeat a tagout device.

(iii) Tags must be legible and understandable by all employees whose work operations are or may be in the area.

(iv) Tags may cause a false sense of security. Understanding their meaning must be part of the overall energy control program.

(v) Securely attach tags to energy isolating devices so that they cannot be inadvertently or accidentally detached.

(C) **Employee retraining.**

(i) Retrain employees when a change in their job assignment, a change in machines, equipment or processes present a new hazard or when the program changes.

(ii) Retrain employees when a review shows or the employer has reason to believe, that there are problems in the employees' knowledge or use of the program.

(D) Document the employee training in writing with each employee's name and date(s) of training.

(h) Energy isolation. Authorized employees doing the servicing or maintenance must do the lockout or tagout.

(i) Notification of employees. Notify affected employees of the application and removal of lockout or tagout devices before applying the controls and after removing them from the machine or equipment.

(6) Application of control. The established procedures for the application of energy control (the lockout or tagout program) must cover the following points in the following sequence:

(a) Preparation for shutdown. Before an authorized or affected employee turns off a machine or equipment, they must know the type and amount of the involved energy, the hazards of the energy and the method to control it.

(b) Machine or equipment shutdown. Turn off the machine or equipment using the procedures established for it. Do an orderly shutdown to avoid new or increased hazards because of the equipment stoppage.

(c) Machine or equipment isolation. All energy isolating devices must be physically placed and used in ways that isolate the machine or equipment from the energy source(s).

(d) Lockout or tagout device application.

(A) Only authorized employees are to connect lockout or tagout devices to each energy isolating device.

(B) Connect lockout devices in a way that will hold the energy isolating devices in a "safe" or "off" position.

(C) Connect tagout devices in a way that will positively prevent operation or movement of energy isolating devices from the "safe" or "off" position.

(i) Directly connect the tag to the energy isolating device, otherwise it must be as close to the device as safely possible and obvious to anyone attempting to operate the device.

(e) Stored energy.

(A) After the application of lockout or tagout devices, relieve or make safe all potentially hazardous stored or residual energy.

(B) If stored energy can again reach a hazardous level, continuously verify its isolation until the servicing or maintenance is done or until the possibility is gone.

(f) Verification of isolation. Before starting work on locked out or tagged out machines or equipment, the authorized employee must verify that isolation and de-energizing of the machine or equipment has been done.

(7) Release from lockout or tagout. The authorized employee(s) must follow procedures and take actions to guarantee the following before removing lockout or tagout devices and restoring energy to the machine or equipment:

(a) The machine or equipment. Remove non-essential items from the work area and confirm the return of the machine or equipment to pre-lockout or normal running condition.

(b) Employees.

(A) Check the work area to ensure that all employees are safe or removed from the area.

(B) Notify affected employees after removing the lockout or tagout devices but before starting the machine or equipment.

(c) Lockout or tagout devices removal. Only the employee who applies it can remove a lockout or tagout device. However, when that employee is not available, the employer may direct its removal if specific procedures and training for such removal are a part of the employer's energy control program. The employer must show that the specific procedure is as safe as removal by the authorized employee who applied it. The specific procedure must include at least the following:

(A) Verification by the employer that the authorized employee who applied the device is not at the facility;

(B) Attempting to contact the authorized employee to inform him or her about the removal of their lockout or tagout device; and

(C) Ensuring that the authorized employee has this knowledge before he or she resumes work at that facility.

(8) Additional requirements.

(a) Testing or positioning of machines, equipment or components thereof. Follow this sequence of actions when it is necessary temporarily to remove lockout or tagout devices and energize the machine or equipment. This must only be done for testing or positioning the machine, equipment or component of it.

(A) Clear the machine or equipment of tools and materials;

(B) Remove employees from the machine or equipment area;

(C) Remove the lockout or tagout devices;

(D) Energize and go on with testing or positioning;

(E) Remove energy from all systems and reapply original energy control measures to continue the servicing and/or maintenance.

(b) Outside personnel (contractors, etc.).

(A) If outside servicing personnel are doing things covered by this standard, the on-site employer and the outside employer must coordinate their respective lockout or tagout procedures.

(B) The on-site employer must be certain that its employees understand and comply with the provisions of the outside employer's energy control program.

(c) Group lockout or tagout.

(A) When a crew, craft, department or other group does service or maintenance, they must use a procedure that gives employees a level of protection equal to that provided by using a personal lockout or tagout device.

(B) Use group lockout or tagout devices according to **(4)(d)** including, but not limited to, these requirements:

(i) Primary responsibility is with an authorized employee for a set number of employees working under the protection of a group lockout or tagout device (such as an operations lock);

(ii) The authorized employee must know the exposure status of individual group members with regard to the lockout or tagout of the machine or equipment and

(iii) When work involves more than one crew, craft, department, etc., assignment of overall job-associated lockout or tagout control responsibility to an authorized employee designated to coordinate affected work forces and ensure continuity of protection; and

(iv) Each authorized employee must put a personal lockout or tagout device on the group lockout device, group lockbox, or comparable mechanism when they begin work, and must remove those devices when they stop working on the machine or equipment.

(d) Shift or personnel changes. Have specific procedures for shift or personnel changes to ensure the continuity of lockout or tagout protection. These must include the orderly transfer of lockout or tagout device protection between leaving and arriving employees. The procedure must minimize exposure to hazards related to the ongoing process.

Note: The following Appendix is a non-mandatory guideline to help employers and employees comply with the requirements.

APPENDIX A – TYPICAL MINIMAL LOCKOUT PROCEDURE

GENERAL

This simple lockout procedure is to help employers so they meet the requirements of this standard. When the energy isolating devices are not lockable, tagout is OK if the employer complies with the provisions requiring additional training and more rigorous periodic reviews. When using tagout and the energy isolating devices are lockable, the employer must provide full employee protection (see paragraph (5)(c)), additional training and more rigorous periodic inspections. More complex systems may need more comprehensive procedures.

Lockout Procedure

Lockout procedure for

_____

(Name of Company for single procedure or identification of equipment if using multiple procedures.)

PURPOSE

These are the minimum requirements for the lockout of energy isolating devices when maintenance or servicing is done on machines or equipment. Use it to ensure that the machine or equipment stops and is isolated from all potentially hazardous energy sources. Locked it out before employees work where the unexpected energizing or starting or release of stored energy could cause injury.

COMPLIANCE WITH THIS PROGRAM

All employees must comply with the restrictions and limitations imposed upon them during the use of lockout. Require authorized employees to do the lockout following this procedure. When employees, see a locked out machine or piece of equipment they must not attempt to start, energize or use it.

_____

Type of compliance enforcement for violation of the above.

SEQUENCE OF LOCKOUT

(1) Notify all affected employees about required service or maintenance on a machine or equipment and that it must be shut down and locked out to do the work.

Name(s)/Job Title(s) of affected employees and how to notify.

(2) The authorized employee must refer to the procedure to identify the type and amount of the energy that the machine or equipment uses, understand the hazards of the energy and know the methods to control it.

Type(s) and amount(s) of energy, its hazards and the methods to control the energy.

(3) If the machine or equipment is operating, shut it down by the normal stopping procedure (depress stop button, open switch, close valve, etc.).

Type(s) and location(s) of machine or equipment operating controls.

(4) Deactivate the energy isolating device(s) so that the machine or equipment is isolated from the energy source(s).

Type(s) and location(s) of energy isolating devices.

(5) Lock out the energy isolating device(s) with assigned individual lock(s).

(6) Release or restrain stored or residual energy (such as that in capacitors, springs, elevated machine members, rotating flywheels, hydraulic systems and air, gas, steam, or water pressure, etc.) by methods such as grounding, repositioning, blocking, bleeding down, etc.

Type(s) of stored energy – methods to release or restrain.

(7) Disconnect the equipment from the energy source(s) by first removing any exposed employees from the area. Then verify the isolation of the equipment by trying the normal operating control(s) or by testing to make certain that the equipment will run.

Caution: Return operating control(s) to neutral or "off" position after verifying the isolation of the equipment.

Method of verifying the isolation of the equipment.

(8) The machine or equipment is now locked out.

RESTORING EQUIPMENT TO SERVICE. When the work is completed and the machine or equipment is ready to return to operation, take the following steps:

(1) Check the machine or equipment and the immediate area around it and remove any non-essential items. Be sure the machine or equipment is operationally intact.

(2) Safely position or remove all employees from the area.

(3) Verify that the controls are in neutral.

(4) Remove the lockout devices and energize the machine or equipment.

Note: The removal of some forms of blocking may require energizing of the machine beforehand.

(5) Notify affected employees that the work is complete and the machine or equipment is ready for use.

To: Jennie Butler
Dockets Management
Room 134 Parklawn Bldg.
HFA-305

From: Camille Brewer

0840 '97 DEC 16 P1:46

Subject: Docket 97N-0451

Date: December 15, 1997

Please add the enclosed documents to the docket 97N-0451.

1. Oregon Fresh Market Grower's Association. Testimony

2. Monterey County, Department of Social Services. Comments.

3. Oregon Administrative Rules. Chapter 340. Items A, B, and C.

Thanks.