FDA Executive Summary

Prepared for the
March 27, 2009 meeting of the
Ophthalmic Devices Panel

P050034
VisionCare Ophthalmic Technologies, Inc.
Implantable Miniature Telescope (IMT)

TABLE OF CONTENTS

1. DEVICE DESCRIPTION 1

2. PROPOSED INDICATIONS FOR USE 2

3. REGULATORY HISTORY 3

4. PRE-CLINICAL STUDIES 3

4.1 BIOCOMPATIBILITY – BIOLOGICAL TESTING (M050004, MODULE 1) 3
4.2 BIOCOMPATIBILITY - PHYSICO-CHEMICAL TESTING (M050004, MODULE 1) 5
4.3 STERILIZATION, PACKAGING AND SHELF LIFE (M050004, MODULE 2) 6
4.4 MANUFACTURING (M050004, MODULE 3) 6

5. CLINICAL STUDIES 6

5.1 SAFETY/ EFFECTIVENESS ENDPOINTS 6
5.2 INCLUSION/EXCLUSION CRITERIA 7
5.3 OPERATIVE PROCEDURES 8
5.4 POST-OPERATIVE EVALUATION AND EXAMINATION SCHEDULE 9
5.5 CLINICAL STUDY RESULTS – 13
5.5.1 Accountability 13
5.5.2 Demographics 15
5.5.3 Pre-operative/ Operative Parameters 16
5.5.4 Effectiveness Outcomes 17
5.5.4.1 Best Corrected Distance Visual Acuity (BCDVA) 18
5.5.4.2 Best Corrected Near Visual Acuity (BCNVA) - Protocol IMT-002 20
5.5.4.3 Improvement in BCDVA and BCNVA – Protocol IMT-002 21
5.5.4.4 Effect of Pre-operative Parameters on Effectiveness Outcomes – Protocol IMT-002 21
5.5.4.5 Effect of Cataract Removal and IOL Implantation on Change in Mean BCDVA from Pre-IOL BCDVA 22
5.5.4.6 Quality of Life Assessment – IMT-002 (only) 28
5.5.5 Safety Outcomes 30
5.5.5.1 Loss of Best Corrected Visual Acuity – Protocol IMT-002 30
5.5.5.2 Summary of Acuity Safety Endpoints – Protocol IMT-002 30
5.5.5.3 Summary of Adverse Events and Complications 32
5.5.5.4 Corneal Decompensation and Cases of Late Corneal Edema 33
5.5.5.5 Posterior Capsular Opacification – Protocol IMT-002 36
5.5.5.6 Examination and Treatment of the Posterior Segment 38
5.5.5.7 IMT Clearance 39
5.5.5.8 Specular Microscopy 41
5.5.5.8.1 Background 41
5.5.5.8.2 ECD Results 43
5.5.5.8.3 Statistical Modeling 50
5.5.5.8.4 Morphometric Analysis of Specular Microscopy Images and Endothelial Stabilization 59
5.5.5.8.5. Risk of Low ECD and Sub-group Analysis 64
5.5.5.8.6 ECD Summary 70
5.5.6 Postoperative Vision Rehabilitation 71
5.5.6.1 Rehabilitation Training Program 71
5.5.7 Missing subject data 72

6. POST-APPROVAL STUDIES 79

a. Continued Follow-up of the Pre-market Clinical Study (IMT-002) Cohort 81
b. Follow-up of Patients Receiving the IMT Post Approval 82

Attachment 1 FDA Executive Summary and Addendum, dated July 14, 2006
Attachment 2 Post-panel Summary

Table of Contents for Figures

FIGURE 1 - IMT 1
FIGURE 2 - IMT 1
FIGURE 3 - BCDVA WITH EXTERNAL TELESCOPE AT BASELINE 26
FIGURE 4 - POSTSURGICAL DECLINE IN ECD 46
FIGURE 5 - DISTRIBUTION OF ECD RESIDUALS POSTOP 48
FIGURE 6 - ECD MEASUREMENT VARIABILITY 50
FIGURE 7 - 24 MONTH ECD AS A FUNCTION OF PREOPERATIVE ECD 59
FIGURE 8 - ECD% CHANGE FROM 24 TO 48 MONTHS VS. PERCENT OF HEXAGONALITY AT 24 MONTHS 63
FIGURE 9 - ECD% CHANGE FROM 24 TO 48 MONTHS VS. COEFFICIENT OF VARIATION AT 24 MONTHS 63

Table of Contents for Tables

TABLE 1 - MINIMUM ECD LEVELS BY AGE 2
TABLE 2 - SUMMARY OF BIOCOMPATIBILITY TESTING 4
TABLE33A 10
TABLE 3B 10
TABLE 3C 12
TABLE 4A - AVAILABILITY AND ACCOUNTABILITY 14
TABLE 4B - AVAILABILITY AND ACCOUNTABILITY – IMT-220-LTM 15
TABLE 5 - DEMOGRAPHICS- IMT-002-LTM 16
TABLE 6 - SUMMARY OF VISUAL ACUITY EFFECTIVENESS ENDPOINTS 17
TABLE 7 - MEAN BCVA AT BASELINE, 12 MONTHS AND 24 MONTHS 18
TABLE 8 - CUMULATIVE BCDVA IMPROVEMENT FROM BASELINE 19
TABLE 9 - MEAN BCDVA AT BASELINE, 36 MONTHS AND 48 MONTHS 19
TABLE 10 - CHANGE IN BCDVA FROM BASELINE 23
TABLE 11 - EFFECT OF CATARACT REMOVAL AND IOL IMPLANT ON CHANGE IN MEAN BCDVA 24
TABLE 12 - BCDVA FOR IMT AND FOR EXTERNAL TELESCOPE 25
TABLE 13 - MEAN BCDVA 27
TABLE 14 - COMPARISON OF POSTOPERATIVE BCDVA FOR 27
TABLE 15 - LOSS OF BCDVA 30
TABLE 16 - PRESERVATION OF BCVA 31
TABLE 17A - IMT IMPLANTED EYES – IMT-002-LTM 32
TABLE 17B - FELLOW EYES OF IMT IMPLANTED EYES – IMT-002-LTM 32
TABLE 18 - CORNEAL EDEMA OBSERVED BY VISIT 34
TABLE 19 - IMT-IMPLANTED EYES WITH CORNEAL DECOMPENSATION OR LATE CORNEAL EDEMA 35
TABLE 20 - DISTRIBUTION OF EYES IMAGED BY PREOPERATIVE ACD 40
TABLE 21 - CENTRAL CLEARANCE FROM ANTERIOR SURFACE OF IMT TO THE CORNEAL ENDOTHELIUM 40
TABLE 22 - PERIPHERAL CLEARANCE FROM ANTERIOR SURFACE OF IMT TO THE CORNEAL ENDOTHELIUM 41
TABLE 23 - ENDOTHELIAL CELL DENSITY IMT-IMPLANTED EYES – IMT-022 STUDY 44
TABLE 24 - ENDOTHELIAL CELL DENSITY ALL IMT-IMPLANTED EYES – IMT-002-LTM STUDY 45
TABLE 25 - ANNUALIZED PERCENT CHANGE IN ECD ALL IMT-IMPLANTED EYES (PAIRED ANALYSIS) 47
TABLE 26 - PERCENTILES OF ECD% CHANGE FROM BASELINE ALL IMT-IMPLANTED EYES 49
TABLE 27 - MODEL-GENERATED PARAMETER ESTIMATES 52
TABLE 28 - PREDICTED MEAN ECD BASED ON BI-EXPONENTIAL MODEL 53
TABLE 29 - PREDICTED PROBABILITY OF ECD LESS THAN THRESHOLD 53
TABLE 30 - PROPOSED GRID OF PREOPERATIVE ECD REQUIRED FOR IMT IMPLANTATION 55
TABLE 31 - MODEL GENERATED PARAMETER ESTIMATES 56
TABLE 32 - PREDICTED PROBABILITY OF ECD LESS THAN THRESHOLD 56
TABLE 33 - GRID OF PREOPERATIVE ECD REQUIRED FOR IMT IMPLANTATION 57
TABLE 34 - PERCENT HEXAGONALITY (MEAN, SD) 24-MONTH CONSISTENT COHORT 60
TABLE 35 - CV (MEAN, SD) 24-MONTH CONSISTENT COHORT 60
TABLE 36 - NUMBER OF EYES WITH VARIOUS "RISK FACTORS" 65
TABLE 37 - PROPORTION OF EYES WITH "WITHIN-EYE MEAN ECD" < 1000 CELLS/MM2 66
TABLE 38 - PROPORTION OF EYES WITH "WITHIN-EYE MEAN ECD" < 750 CELLS/MM2 67
TABLE 39 - BCDVA BY VISIT 11 NON-IMPLANTED EYES 73
TABLE 40 - CUMULATIVE BCDVA CHANGE FROM BASELINE 11 NON-IMPLANTED EYES 74
TABLE 41 - ENDOTHELIAL CELL DENSITY 11 NON-IMPLANTED EYES 74
TABLE 42 - OCULAR COMPLICATIONS 11 NON-IMPLANTED EYES 75
TABLE 43 - BCDVA BY VISIT 13 EYES MISSING 24-MONTH FOLLOW-UP 77
TABLE 44 - ENDOTHELIAL CELL DENSITY 13 EYES MISSING 24-MONTH FOLLOW-UP 77
TABLE 45 - OCULAR COMPLICATIONS 13 EYES MISSING 24-MONTH FOLLOW-UP 78
TABLE 46 - OCULAR ADVERSE EVENTS 13 EYES MISSING 24-MONTH FOLLOW-UP 78

1. Device Description

Vision Care's Implantable Miniature Telescope (IMT) is a visual prosthetic device which, when combined with the cornea, constitutes a telephoto lens for improvement of visual acuity in subjects with bilateral moderate to profound macular degeneration. The IMT device is surgically implanted in the posterior chamber of the eye, in place of the eye's crystalline lens and is held in position by haptic loops.

The IMT device (Figures 1 and 2) contains two micro lenses, which magnify objects in the central visual field, allowing the patient to see without the need for external low-vision aids. A magnified image is projected by the IMT implant onto the retina, enabling the patient to recognize and identify objects that could not otherwise be seen. The IMT device is available in two models: Wide Angle (WA) 2.2X, and Wide Angle (WA) 3.0X, which provide nominal magnification of x2.2 and x2.7, respectively.

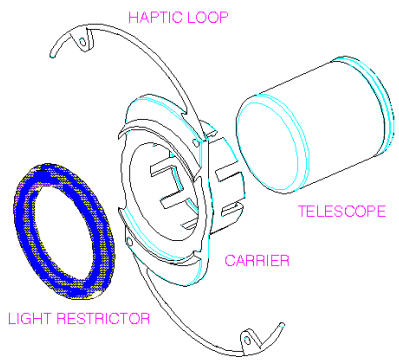

Figure 1 - IMT

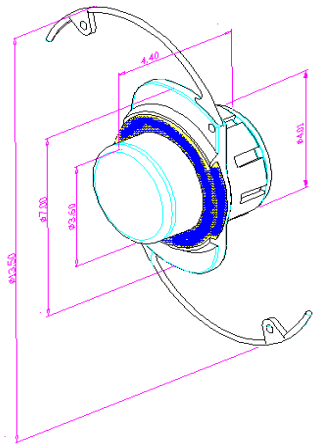

Figure 2 - IMT

Both models are designed predominantly for the restoration of intermediate to far vision (increasing the ability to view objects several meters away from the patient). The addition of conventional spectacles provides correction for near vision activities.

The IMT device is intended for monocular implantation. The implanted eye provides central vision, while the fellow eye continues to be used for peripheral vision.

The IMT implant is composed of three primary components; a fused silica capsule that contains optical elements, a clear polymethylmethacrylate (PMMA) carrier, and a blue PMMA light restrictor. The optical component is snap-fitted into the carrier. One of the internal components (not in contact with body fluids or tissue) of the IMT implant contains stainless steel, which may interfere with the safe use of Magnetic Resonance Imaging (MRI). However, MRI compatibility of the IMT implant has been established through appropriate testing, such that the IMT is considered MR conditional.

2. Proposed Indications for Use

The Implantable Miniature Telescope (IMT) is indicated to improve vision by monocular implantation in patients 65 years of age or older with stable moderate (distance BCVA of 20/80 or poorer) to profound (distance BCVA 20/800 or better) vision impairment caused by bilateral central scotomas associated with end-stage age-related macular degeneration. Patients must have:

- retinal findings of geographic atrophy or disciform scar with foveal involvement, as determined by fluorescein angiography;
- evidence of cataract;
- at least a five-letter improvement on the Early Treatment Diabetic Retinopathy Study (ETDRS) chart with an external telescope;
- adequate peripheral vision in the eye not scheduled for surgery;
- willingness to participate in a postoperative visual training/rehabilitation program.

The sponsor is proposing to qualify their indication with the following contraindications and warnings. We would like to draw your attention to these for your consideration in addressing FDA's questions:

Contraindications

- evidence of corneal guttata
- anterior chamber depth <3.0 mm
- The IMT is contraindicated in patients who do not meet the minimum age and endothelial cell density, as shown in the grid in Table 1.

Table 1
Minimum ECD Levels by Age

Age Range	65-69		70-74		75-79		80-84		85-89		90 or Greater	
Gender	Male	Female	Male	Female	Male	Female	Male	Female	Male	Female	Male	Female
Avg. Life Span	16.6	19.5	13.2	15.8	10.3	12.4	7.8	9.4	5.7	6.9	4.2	5.0
Minimum Cell Density	2460	2755	2000	2325	2000	2000	2000	2000	1800	1800	1800	1800

Warnings and other relevant information

- Surgery to implant the IMT should be performed only by cornea specialists.
- This device is restricted to use only by physicians who have participated in the training provided by VisionCare.

3. Regulatory History

An IDE application was approved for Vision Care Ophthalmic Technologies to begin a clinical investigation of the IMT device on May 25, 2000. An IDE supplement for the IMT-002 protocol was approved by FDA in October 2002. In IDE supplement 36 (February 16, 2006), the sponsor requested approval for protocol IMT-002-LTM to allow for follow-up through 60 months for the continuing safety evaluation of the subjects enrolled in Protocol IMT-002. In IDE supplement 40 (August 1, 2006), the sponsor notified FDA that they have modified the protocol for their IMT investigation to add pachymetry, gonioscopy and anterior segment imaging by ultrasonic biomicroscopy (or other method) at the 3-year examination.

Vision Care Ophthalmic Technologies submitted an application requesting approval for the IMT device using the modular regulatory pathway. The first module was submitted on January 18, 2005. Module 0 contained the PMA shell. Module 1 contained the biocompatibility and chemistry non-clinical studies. Module 2 contained the engineering and sterilization non-clinical studies. Module 3 contained the manufacturing information. Module 4 that contained the results of the clinical investigation was submitted on September 9, 2005 and resulted in all open modules being converted into PMA P050034.

The Ophthalmic Devices Panel convened on July 14, 2006 (http://www.fda.gov/ohrms/dockets/ac/cdrh06.html#Ophthalmic) to discuss Vision Care Ophthalmic Technologies PMA P050034 (Please see Attachment 1: FDA Executive Summary and Addendum 1, dated July 14th, 2006). After a review of the PMA, the Panel, on a 10-3 vote, voted "Not Approvable" due to safety and effectiveness concerns with the IMT device (Attachment 2: Post-panel summary).

Since the July 14, 2006 Panel meeting, the sponsor has submitted Amendments 6-19 to address outstanding issues associated with their device. These amendments, in addition to providing the results from the long term monitoring protocol IMT-002 LTM, provided updated results from original IMT-002 protocol.

This document contains a summary of safety and effectiveness data collected under protocols IMT-002 and IMT-002-LTM and includes the key issues raised during and subsequent to July 14th Panel meeting. It also contains an update of the IMT adverse events, and complications since the July 2006 Ophthalmic Panel meeting. FDA has reviewed this information and has summarized it in the sections below.

4. Pre-clinical Studies

4.1 Biocompatibility – Biological Testing (M050004, Module 1)

A summary of the biocompatibility testing that the sponsor performed to support the safe use of the IMT is provided in the Table 2 below. The sponsor has conducted all testing in conformance with the relevant sections of International Organization for Standardization (ISO) 10993 and ISO 11979. Additionally, the sponsor has conducted all testing in

conformance with Good Laboratory Practices (GLP) regulations. Testing was performed on ethylene oxide (EO) sterilized finished IMTs or a "mock device" that is a replica of the original product.

Table 2
Summary of Biocompatibility Testing

Test	Method	Extract(s)
Cytotoxicity	ISO Agarose Overlay	"Solid"
		Saline
		YAG Laser extract (saline)
	Inhibition of Cell Growth (1 point)	Water for Injection
	MEM Elution	Minimum Essential Medium
Systemic	USP and ISO Systemic Toxicity	Saline, sesame oil
Implantation	ISO Muscle Implantation Study (30 days and 12 weeks)	N/A
	Rabbit Ocular Implantation (6 months)	N/A
Genotoxicity	Ames Test	Ethanol, saline
	In Vitro Chromosomal Aberration Study	McCoy's 5A Medium
	Mouse Bone Marrow Micronucleus Study	Saline, sesame oil
Irritation, Sensitization	ISO Ocular Irritation	Saline
	Murine Local Lymph Node Assay	Saline, DMSO

Note: The cytotoxicity test on the YAG laser extract and the six month animal implantation tests were conducted on finished devices rather than "mock IMTs."

An in vivo intraocular implantation study was conducted in rabbits for a six month period. The control device was a PMA-approved PMMA intraocular lens (IOL). The test and control lenses were surgically implanted in the posterior chamber of 10 rabbits following phacoemulsification of the natural lens (test lens in one eye, PMMA lens in contralateral eye). The eyes were evaluated by slit lamp examination according to a modified McDonald-Shadduck scoring system, and slit lamp exams were conducted preoperatively, on days 1, 3, 7, weeks 2 through 4, and biweekly until 6 months postop. At 6 months postop, the rabbits were euthanized and the eyes were enucleated and submitted for histopathological examination.

Macroscopic examinations revealed no ocular irritation trends that would be considered clinically significant effects from the test article. Microscopic evaluations of the ocular tissue sections revealed no adverse effects directly related to the test article. The changes in the lens capsules and the presence of regenerative and degenerative lenticular fibers were present for both test and control eyes and are related to the animal model used rather than a treatment effect. There were no significant differences between the eyes that received the test versus the control article.

FDA has no remaining concerns with the biological biocompatibility testing.

4.2 Biocompatibility - Physico-chemical Testing (M050004, Module 1)

The sponsor performed the following physico-chemical testing as described in the ISO biocompatibility standard 11979-5.

i. Extractables – The extraction was performed in purified water and then in chloroform at 37 degrees Celsius (^{o}C) for 72 hours. The sponsor has summarized the results as follows: High Performance Liquid Chromatography (HPLC) analysis showed no hydroxyethylmethacrylate (HEMA) detected in the purified water blank or test extract solutions (the chloroform blank and test extract solutions were analyzed but had peaks that interfered with the detection of HEMA and other compounds); GC/MS (Gas Chromatography/Mass Spectrometry)analysis showed no semi-volatile organic compounds in the blank or test extract solutions; Inductively Coupled Plasma (ICP) analysis showed that the metals/elements analyzed were all below the detectable level with the exception of Boron and Silicon (the concentrations were 1.86 part per million (ppm) and 1.41 ppm, respectively); Ultraviolet (UV) spectroscopy identified no extractable substances in the purified water extract, gravimetric determination showed that the change in mass following the purified water and chloroform extractions was 0.00016 gram (g) and 0.22353 g, respectively. This study is acceptable and demonstrates that the levels of extractables are very low.

ii. Hydrolytic stability – This study looks for the degradation products due to hydrolysis. The testing was performed at 37°C and 50 ^{o}C for 30 and 90 days. The sponsor has summarized the results as follows: HPLC analysis showed no HEMA detected; GC/MS analysis showed no semi-volatile organic compounds; ICP analysis showed that the metals/elements analyzed were all below the detectable level; UV spectroscopy identified no extractable substances, gravimetric determination showed that the change in mass following each extraction was <0.00041 g. This study is acceptable and demonstrates that this device is hydrolytically stable.

iii. Exhaustive extraction – This testing was performed using hexane to determine the total amount of extractable material from the device. The sponsor has summarized the results as follows: The analysis of the hexane extracts showed the percentage of material extracted from the test material was 0.02%. This test is acceptable and demonstrates that the total extractables in the device are very low.

iv. Photostability –The sponsor has performed the photostability testing in conformance with the procedures described in ISO 11979-5. No evidence of instability in the absorbance properties or release of toxic compounds was observed.

v. Nd:YAG testing – The devices were placed in vials with 2 ml of saline and were subjected to laser damage at a power of 5.1 mJ for 50 hits on the periphery of the

test article. The sponsor noted that the laser beam did not pass through the glass portion of the test article. The sponsor has summarized the results as follows: HPLC analysis showed no HEMA detected; GC/MS analysis showed no semi-volatile organic compounds; ICP analysis showed that the metals/elements analyzed were all below the detectable level with the exception of Boron and Silicon (the concentrations were 4.4 ppm and 5.4 ppm, respectively); and UV spectroscopy identified no extractable substances. The study demonstrates that the Nd:YAG does not damage the periphery of the IMT. The sponsor is recommending that the laser not be focused through the central portion of the IMT as this would cause damage to the device. Therefore, no evaluation was performed to determine if the laser could be focused through the optical portion of the IMT.

FDA has no remaining concerns with the physico-chemical biocompatibility testing.

4.3 Sterilization, Packaging and Shelf Life (M050004, Module 2)

The IMT is packaged in a protective case with cap, and then placed into a blister pack with a Tyvek lid, and ethylene oxide sterilized for a sterility assurance level calculated to 10^{-6}. FDA has no remaining concerns regarding the sterilization of the IMT – all issues were resolved in PMA P050034.

The sponsor has proposed a 24 month shelf life for the IMT. FDA has no remaining issues regarding the shelf life at 24 months - all issues were resolved in PMA P050034.

4.4 Manufacturing (M050004, Module 3)

FDA has no remaining concerns with manufacturing.

5. Clinical Studies

This PMA contains data from two protocols conducted under the same IDE. The first is protocol IMT-002, the primary clinical trial. The second protocol, IMT-002-LTM is for the long term follow-up of subjects enrolled in protocol IMT-002. The details of these protocols are described below.

In protocol IMT-002 the sponsor conducted a prospective multi-center clinical trial utilizing twenty-eight (28) clinical sites and enrolling a total of 218 consecutive subjects.

5.1 Safety/ Effectiveness Endpoints

The primary Effectiveness Endpoint for this study was defined as an improvement of 2 lines or greater in either near or distance best corrected acuity in 50% of the implanted eyes at 12 months post-implantation.

Quality of Life surveys (Activities of Daily Living (ADL) and National Eye Institute Visual Function Questionnaire (NEI-VFQ-25)) were secondary measurements of efficacy.

The primary Safety Endpoint for this study was the mean percentage endothelial cell density (ECD) loss less than or equal to 17% at one year post IMT implantation.

An average loss of 10-17% within one year after large incision surgery was noted from the sponsor's review of the literature. The sponsor's objective was to demonstrate that the mean percentage of cell loss could be demonstrated with statistical confidence to be no more than 17%. The statistical power used for the sponsor's sample size calculations was 80% at the expected mean loss of 13.5% (mean of 10% to 17%). The standard deviation of percentage loss in the ECD was assumed to be 0.175 (17.5%), which was estimated based on the feasibility clinical study.

An additional safety endpoint was preservation of best corrected visual acuity. Specifically, no more than 10% of implanted eyes were to experience a loss of more than 2 lines of either near or distance BCVA without a corresponding improvement in BCVA (gain of 2 lines or more); for example, a gain of 2 or more lines of near BCVA (BCNVA – best corrected near visual acuity) in eyes with loss of more than 2 lines distance BCVA (BCDVA – best corrected distance visual acuity), and vice versa.

Adverse events and complications were collected as additional safety endpoints.

5.2 Inclusion/Exclusion Criteria

Key inclusion criteria included subjects with bilateral, stable, untreatable central vision disorders (untreatable AMD or Stargardt's macular dystrophy), BCDVA (best corrected distance visual acuity) between 20/80 and 20/800, and adequate peripheral vision in one eye (the non-implanted eye) to allow navigation. Prospective study subjects needed to demonstrate improvement with an external telescope of at least five letters on the ETDRS chart in the eye scheduled for surgery. Subjects selected to enroll in this study had to be at least 55 years of age, and have an anterior chamber depth of ≥ 2.5 mm and have the need for cataract surgery.

Evidence of active CNV (choroidal neovascularization) on fluorescein angiography or treatment for CNV within the past six months constituted an exclusion from enrollment. If the fellow eye demonstrated an anticipated need for cataract extraction and intraocular lens implantation during the first 12 months following IMT implantation, they were not selected for enrollment. If cataract extraction was anticipated, it had to be performed at least 30 days prior to enrollment in the clinical study. Ophthalmic related surgery within the 30 days preceding implantation of the IMT was an exclusion criterion. The following conditions in the designated operative eye were also cause for exclusion: myopia > 6.0 D; hyperopia > 4.0 D; axial length < 21 mm; ECD < 1600 cells/mm^2; narrow angle, i.e., less than Shaffer grade 2; cornea stromal or endothelial dystrophies or disorders; inflammatory ocular disease; zonular weakness or instability of the crystalline lens; pseudoexfoliation; diabetic retinopathy; untreated retinal tears; retinal vascular disease;

optic nerve disease; history of retinal detachment; and retinitis pigmentosa. Additional exclusions included the presence of any intraocular tumor and medical or ophthalmic condition that in the opinion of the investigator rendered the subject unsuitable for participation in the study. Any ophthalmic pathology that compromised the subject's peripheral vision in the fellow eye or any ocular condition that predisposed the subject to eye rubbing was also cause for exclusion.

Subjects with significant communication impairments or severe neurological disorders that would interfere with the study requirements were deemed unsuitable. Additionally, a history of previous intraocular or corneal surgery of any kind in the operative eye(s), whether refractive or therapeutic prohibited enrollment. If an individual had a known sensitivity to planned study concomitant medications, they could not participate in the study. Typically, in order for a subject to be suitable for enrollment in this clinical trial, they could not be participating in any other clinical trials, even if not ophthalmic. And finally, a history of steroid-responsive rises in intraocular pressure, uncontrolled glaucoma, or preoperative (pre-op) intraocular pressure (IOP) >22 mm Hg deemed a subject unsuitable for enrollment.

Once selected to participate in the clinical trial, a specific procedure was followed to select the operative eye. Visual acuity was assessed with a hand-held external telescope utilizing ETDRS charts. The sponsor provided two or more sets of 2.2X and 3.0X Galilean external telescopes with reading caps to each site for use in the trial. These Galilean telescopes were used for all in-office testing and a 2.2X or 3.0X Galilean external telescope was given to potential subjects to try at home for a period of at least three days. Subjects were assigned either a 2.2X or 3.0X telescope based on their need for magnification and their responsiveness to magnification. Subjects who did not demonstrate any improvement with a 2.2X were then tested with a 3.0X. Subjects had to achieve at least a five-letter improvement (minimal one line) on the ETDRS chart in the proposed operative eye with at least one of the external telescopes in order to proceed with the surgery. Subjects who did not meet this criterion were excluded from the trial.

If the subject had BCDVA better than 20/200 in either eye, the eye with worse visual acuity was chosen for implantation. If BCDVA was equal to or worse than 20/200, or the same in both eyes, the physician and subject decided which eye would be implanted.

Subjects experiencing improvement in visual acuity with the external telescope(s), were further evaluated for eligibility based on distance and near best spectacle corrected visual acuity; manifest refraction; IOP by applanation tonometry; slit lamp evaluation; dilated fundus examination and photography; fluorescein angiography; specular microscopy; pachymetry; and, A-scan.

5.3 Operative Procedures

In preparation for surgery, the subjects were anesthetized via either retrobulbar or peribulbar injection. The IMT was implanted after phacoemulsification had been performed through either a limbal insertion technique or a scleral tunneling procedure. Limbal incisions were 10 mm – 11 mm at 120º to 160º degrees arc length. The scleral

tunnel incisions were 10mm in length and placed from the 10 o'clock to the 2 o'clock positions approximately 2.5 mm – 3 mm posterior to the limbus. Both the limbal and scleral tunnel incisions methods utilized a 6.5 mm continuous curvilinear capsulorhexis. With both techniques, placement was in the capsular bag along with the haptics and utilized a peripheral iridectomy.

5.4 Post-operative Evaluation and Examination Schedule

Postoperatively, one drop of a topical ophthalmic antibiotic solution was to be administered following surgery, and then continued per product labeling for at least two days. One drop of Voltaren Ophthalmic (diclofenac sodium 0.1%, CIBA Vision Ophthalmics) or equivalent was to be administered following surgery, and then continued per product labeling for at least two days. Prednisolone acetate (1%) or equivalent was to be administered every 2 waking hours for the first two weeks post-implantation, followed by administration every 4 waking hours for 2-4 weeks. The prednisolone acetate (1%) was to be gradually tapered over the next 4 to 6 weeks for a total duration of postoperative steroid treatment of approximately 3 months. Homatropine 5% or a similar drug was to be administered twice daily for 4 to 6 weeks postoperatively. If homatropine was inadequate to maintain cycloplegia, the use of atropine was allowed. The Investigator exercised clinical judgment in deciding if a more moderate or rapid tapering of the topical steroid regimen was indicated for some subjects, particularly in eyes with signs of medicamentosa.

FDA had concerns about the aggressive postoperative regimen of ophthalmic steroids. The sponsor was asked to provide FDA with information regarding the presence or absence of medicamentosa and/or any other complications resulting from such an intense postoperative medication regimen. The sponsor responded to this issue in Amendment #2 by stating that there were no cases of medicamentosa and no other complications related to the post-operative medication regimen reported in the clinical trial. The recommendation for intense post-operative regimen will be reflected in the labeling.

Subjects in protocol IMT-002 were followed and evaluated according to the schedule in Table 3a and 3b.

Table 3a
Protocol IMT-002 Follow-up Evaluations

Protocol IMT-002 (PMA Clinical Trial)	
Preoperative Evaluation	Day -90 to Day 0
Operative Evaluation	Day 0
Day 1	24 to 36 hours postoperative
Day 7	4 to 10 days postoperative
1 month	2 to 6 weeks postoperative
3 months	6 to 18 weeks postoperative
Vision training	Week 1, 2, 4, 6, 10 and 12, +/- 4 days
6 months	18 to 32 weeks postoperative
9 months	32 to 44 weeks postoperative
12 months	44 to 56 weeks postoperative
18 months	66 to 78 weeks postoperative
24 months	84 to 102 weeks postoperative

Table 3b
Protocol IMT-002 Evaluation Schedules

Exam/ Test*	**Visit**								
	Preop	**Day 7**	**1 Mo.**	**3 Mo.**	**6 Mo.**	**9 Mo.**	**12 Mo**	**18 Mo**	**24 Mo**
BSCDA (ETDRS)	X	X	X	X	X	X	X	X	X
BSCNVA (MN)	X	X	X	X	X	X	X	X	X
Man. Ref.	X	X	X	X	X	X	X	X	X
IOP	X	X	X	X	X	X	X	X	X
Slit Lamp	X	X	X	X	X	X	X	X	X
Fundus & Photo	X								
FA	X								
Pachymetry	X			X	X	X	X	X	X
A-scan	X								
Spec. Micros.	X			X	X	X	X	X	
VFQ ADL	X			X	X	X	X	X	

* Pinhole acuity (safety assessment) occurred at Day 1 postop.

In Protocol IMT-002, specular microscopy was performed preoperatively and at the Month 3, 6, 9, 12, 18 and 24 examinations in the treated and fellow eyes with the non-contact Konan or Topcon Specular Microscope. Three images were obtained at each visit. Specular micrographs were sent to a central reading center (B. McCarey, Ph.D., Emory University) for analysis and the mean density from all three images was used for statistical analyses. Sites were instructed to take three acceptable images at each visit. The mean density from the three images was used for the analysis. A central reading center performed the analyses and conducted the cell counts according to a preordained methodology.

Protocol IMT-002-LTM (Long Term Follow-Up Protocol)

Protocol IMT-002-LTM is intended to provide an additional 36 months of safety data, for a total of 5 years of follow-up on subjects participating 'in the IMT-002 trial, a 24 month pivotal trial conducted to support a marketing application (PMA P050034) for the IMT.

The study population consists of subjects who have completed participation in the IMT-002 protocol and are able to understand and comply with the requirements of the clinical study. These subjects must be able to abide by the requirements and restrictions of the study. Finally, the subjects who enrolled in IMT-002-LTM had to sign a voluntary informed consent.

Three attempts were made to contact each study subject that completed IMT-002, two attempts were by phone and one by letter. The subject's willingness and ability to meet the follow-up requirements were determined by the investigator or their designee. If the study subject refused or was unable to participate in the long term follow-up study, the reasons were documented. Documentation was also provided for subjects who could not be contacted.

The clinical parameters evaluated are:

- Best spectacle-corrected distance acuity, using ETDRS VA charts: all visits (implanted and fellow eyes)
- Intraocular pressure: all visits
- Specular microscopy of the central cornea: all visits (implanted and fellow eyes)
- Slit lamp exam
- Pachymetry
- Device failures
- Complications
- Adverse events.

Subjects were permitted to use rehabilitation services on an as needed basis.

This study is observational by design and non-comparative in nature. Hence, the primary statistical analysis will be based on descriptive statistical techniques using 95%

confidence intervals. Slit lamp findings are analyzed, and in particular, various analyses of specular microscopy findings were performed. These include:

- Endothelial Cell Density
- Change in endothelial cell density (ECD) from baseline
- Percent change in endothelial cell density (ECD) from baseline
- Change in ECD between consecutive postoperative visits
- Percent change in ECD between consecutive postoperative visits
- Percent change in ECD between consecutive postoperative visits in pseudophakic fellow eyes of subjects implanted with the IMT

The adverse events and complications of emphasis are posterior capsular opacification, intraocular pressure, ocular complications and adverse events. Effectiveness is analyzed by the change in BCDVA stratified by IMT model and visit.

The following Table 3c presents the schedule of exams and clinical parameters for protocol IMT-002-LTM.

Table 3c
Protocol IMT-002-LTM Evaluation Schedules

Exam/ Test	**Visit**						
	Study Entry Visit if Patient is out of cycle	30 Mos. ± 3 mos.	36 Mos. ± 3 mos	42 Mos. ± 3 mos	48 Mos. ± 3 mos	54 Mos. ± 3 mos	60 Mos. ± 3 mos
Distance Best Corrected Visual Acuity (Both Eyes)	X	X	X	X	X	X	X
IOP	X	X	X	X	X	X	X
Slit Lamp Exam	X	X	X	X	X	X	X
Specular Microscopy (Both Eyes)	X	X	X	X	X	X	X
Pachymetry	X	X	X	X	X	X	X
Gonioscopy*							
Anterior Segment Imaging*							
Device Failures	X	X	X	X	X	X	X
Complications	X	X	X	X	X	X	X
Adverse Events	X	X	X	X	X	X	X

* Protocol IMT-002-LTM was amended to require that gonioscopy and anterior segment imaging be performed on a subset of up to 50 subjects.

In Protocol IMT-002-LTM, specular microscopy was performed at all visits: 30, 36, 42, 48, 54 and 60 months. The same procedures were followed as in the PMA clinical trial, Protocol IMT-002. Quality of Life assessments were not conducted in the long-term follow-up study.

In amendment 6, pachymetry, gonioscopy and anterior segment imaging by UBM or OCT were added to the parameters measured at the 36-month visit for protocol IMT-002-LTM. Gonioscopy and anterior segment imaging were to be performed in a subset of up to 50 patients. Protocol IMT-002-LTM (in Amendment 7) stipulated that pachymetry will be performed on all study subjects at all study examinations.

5.5 Clinical study results –

A total of 218 consecutive subjects were enrolled at 28 U.S. clinical sites in Protocol IMT-002. One subject withdrew from the study before surgery, resulting in a study population of 217 operated eyes. Surgical complications resulted in 11 subjects not being implanted with the IMT. This resulted in a cohort of 206 IMT-implanted subjects. Of the 206 eyes comprising study population, 115 eyes were implanted with the WA 2.2X and 91 eyes were implanted with the WA 3.0X.

At the time of database lock, 194 eyes had reached the 12-month follow-up, 180 eyes had reached the 18-month follow-up examination and 148 eyes had reached 24-month follow-up. Based on statistical modeling, (generalized estimating equation [GEE] and regression methods), a determination was made by FDA that the PMA could be submitted with these numbers of subjects at the corresponding follow-up periods.

In January 2007, additional follow-up on the study population was provided to FDA in amendment 7.

5.5.1 Accountability

At the time of database lock of Protocol LMT-002 in 2005, 194 eyes had reached the 12-month follow-up, 180 eyes had reached the 18-month follow-up examination and 148 eyes had reached 24-month follow-up. Based on statistical modeling, (GEE and regression methods), a determination was made by FDA that the PMA could be submitted with these numbers of subjects at the corresponding follow-up periods.

Accountability for this study was $\geq$ 98.5% for visits through 6 months, 96.1% (196/204) at 9 months, 97.5% (194/199) at 12 months, 91.4% (180/197) at 18 months, and 92.6% (174/188) at 24 months. A total of 29 subjects have been discontinued from the PMA study (Protocol IMT-002), including 10 subjects who died during the course of follow-up and 6 subjects who discontinued following removal of the IMT prior to study completion. A total of 8 subjects had the IMT explanted postoperatively. Six (6) of these 8 subjects were discontinued from the study before completing required follow-up. Since the submission of the original PMA, the

sponsor has updated these data through several amendments. The current data are presented in the table 4a below:

Table 4a
Availability and Accountability - IMT-002
Operated Subjects (N = 217)
(Table 3 Sponsor's 2009 Executive Summary)

Total Subjects (N) = 217		1 Month	3 Months	6 Months	9 Months	12 Months	18 Months	24 Months
Available for Analysis	n/N (%)	217/217 (100.0%)	207/217 (95.4%)	204/217 (94.0%)	196/217 (90.3%)	196/217 (90.3%)	180/217 (82.9%)	174/217 (80.2%)
Discontinued	n/N (%)	0/217 (0.0%)	7/217 (3.2%)	11/217 (5.1%)	13/217 (6.0%)	16/217 (7.4%)	20/217 (9.2%)	29/217 (13.4%)
Deceased		0/217 (0.0%)	1/217 (0.5%)	3/217 (1.4%)	3/217 (1.4%)	5/217 (2.3%)	7/217 (3.2%)	10/217 (4.6%)
IMT removed postoperatively		0/217 (0.0%)	1/217 (0.5%)	1/217 (0.5%)	1/217 (0.5%)	2/217 (0.9%)	2/217 (0.9%)	8/217 (3.7%)
Lost to Follow-up	n/N (%)	0/217 (0.0%)	0/217 (0.0%)	0/217 (0.0%)	1/217 (0.5%)	2/217 (0.9%)	8/217 (3.7%)	13/217 (6.0%)
Missed Visit	n/N (%)	0/217 (0.0%)	3/217 (1.4%)	2/217 (0.9%)	7/217 (3.2%)	3/217 (1.4%)	9/217 (4.1%)	1/217 (0.5%)
% Accountability = Available for Analysis ÷ (Enrolled - Discontinued)		217/217 (100.0%)	207/210 (98.6%)	204/206 (99.0%)	196/204 (96.1%)	196/201 (97.5%)	180/197 (91.4%)	174/188 (92.6%)

In Protocol IMT-002-LTM, subjects were asked to consent to an additional 3 years of follow-up to provide long-term safety data on IMT implants. As of the 24 month visit in IMT-002, 10 subjects died and 13 subjects were lost to follow-up. One hundred twenty-nine (129) of the original subjects were enrolled into the long-term follow-up study. When the database was frozen for this report, there were 3, 84, 113, and 106 subjects available for analysis at the 30, 36, 42, and 48 month intervals respectively in the long-term follow-up protocol. By 48 months, 6 subjects had discontinued, 5 were deceased, and 1 had the IMT explanted. Ten (10) were lost to follow-up and 7 missed their visit. Per cent accountability at 30, 36, 42, and 48 months postoperatively was 100%, 99%, 93% and 86% respectively (Table 4b). It is noted that the sponsor reports only 3 subjects available for analysis at 30 months. The sponsor identified that it was between 30 and 36 months that the long term follow-up subjects were primarily enrolled. Contacting, enrolling, informing, and clearance of subjects through the Institutional Review Boards (IRBs) was a lengthy process and passed the 30 month interval proposed for the IMT-002-LTM protocol.

Table 4b
Availability and Accountability - IMT-002 –LTM
OPERATED SUBJECTS
(AMENDMENT #13)

	30 Months	36 Months	42 Months	48 Months
Available for analysis	3/3 (100%)	84/85 (99%)	113/125 (90%)	106/129 (82%)
Discontinued (cumulative)			4/125 (3%)	6/129 (5%)
Deceased			3/125 (2%)	5/129 (3%)
IMT removed postoperatively			1/125 (1%)	1/129 (1%)
Lost to Follow-up			3/125 (2%)	10/129 (8%)
Missed Visit		1 /85 (1%)	5/125 (4%)	7/129 (5%)
% Accountability = Available for Analysis / (Enrolled - Discontinued)	3/3 100%	84/85 99%	113/121 93%	106/123 86%

5.5.2 Demographics

Demographically, Protocol IMT-002 analysis showed that 114 (52. 5%) subjects were male and 103 (47.5%) were female. The mean age was 75.6 years (standard deviation (S.D.) 7.3, range 55 – 93 years). The majority of subjects were Caucasian (208/217 or 95.9%); 2.3% of the study population was Hispanic, 1.4% was black and 0.5% was Asian. The mean anterior chamber depth was 3.15 (S.D. = 0.38; range: 2.48 – 4.74).

Protocol IMT-002-LTM has similar demographic characteristics as they are a subset of the original study population as presented in Table 5.

Table 5
Demographics- IMT-002-LTM
Sponsor's Exec Summary
(Volume I, Table 40.1, p. 202)

	129 Operated Eyes Enrolled in LTM		88 Operated Eyes Not Enrolled in LTM		P-value[1]
	Number	Percentage	Number	Percentage	
Gender					0.4898
Female	64	49.6%	39	44.3%	
Male	65	50.4%	49	55.7%	
Race					0.9103
Caucasian	122	94.6%	86	97.7%	
Black	2	1.6%	1	1.1%	
Hispanic	4	3.1%	1	1.1%	
Asian	1	0.8%	0	0.0%	
Other	0	0.0%	0	0.0%	
Eye Implanted					0.5803
Right	60	46.5%	45	51.1%	
Left	69	53.55	43	48.9%	
Age (in Years)					0.0402
Mean	74.7		76.8		
Standard Deviation	7.3		7.4		
Minimum	57		55		
Maximum	89		93		

5.5.3 Pre-operative/ Operative Parameters

Preoperative clinical analysis of Protocol IMT-002 for IMT eyes shows that the average anterior chamber depth (ACD) was 3.15 mm (S.D. 0.37 mm, range 2.48 - 4.74 mm). Preoperative axial length, determined by A-scan, was 23.74 mm (S.D. 0.93, range 21.53 – 26.14 mm). The major form of Age-related Macular Degeneration (AMD) represented was described as disciform scar only (n=91 or 44.2%), or geographic atrophy only (n=78 or 37.9%). Cataract type was specified as nuclear in the vast majority of eyes (n=203 or 98.5%). At baseline, mean BCDVA was 20/312, mean BCNVA at 8 inches was 20/315 and mean BCNVA at 16 inches was 20/262. Preoperative parameters of the study population for protocol IMT-002-LTM are likewise similar to the original study population.

The operative characteristics of the study cohort show that a limbal insertion was performed in 63.6% (131/206) of the study subjects, and the remaining eyes (36.4% or 75/206) underwent scleral tunneling. In 100% of eyes (206/206) the crystalline lens was extracted via conventional phacoemulsification techniques. In 87 eyes (87/206 or 42.2%), Healon V alone or in combination with another viscoelastic was used during the procedure. Mean capsulorhexis size was 6.6 mm (S.D. 0.59 mm; range 5.0 – 8.5 mm). In most eyes (203/206 or 98.5%) the iris position was flat following IMT implantation. The superior loop of the haptic was reported to be in the bag in 96.1% (198/206) of eyes and the inferior loop of the haptic was in the bag in 97.6% (201/206). The IMT position was reportedly centered in 99.5% (205/206) of eyes. As required in the study protocol, iridectomy was performed in all but 4 (1.9%)

study eyes. Other surgical procedures performed at the time of IMT implantation consisted of pupil stretch and lysis of peripheral anterior synechiae.

5.5.4 Effectiveness Outcomes

Improvement of 2 lines or greater in either near or distance best corrected acuity was reported for 89.1% of eyes at 6 months, 89.7% at 9 months, and 90.1% at 12 months, 87.2% at 18 months, and 85.7% at 24 months (Table 6). Of 173 IMT-implanted eyes, 149 [86.1%] achieved the primary efficacy endpoint.

The IMT-002-LTM protocol specified measurement of BCDVA only. In the study subjects in IMT-002-LTM, 69% gained >2 lines in BCDVA at 36 months, and 68% achieved a 2-line or greater gain in BCDVA at 48 months.

Eyes with profound visual impairment (pre-op BCDVA worse than 20/400) showed a significantly higher success rate at 12 and 18 months than eyes with moderate impairment (pre-op BCDVA 20/80 to 20/160) at baseline. This trend continued at 24, 36, and 48 months.

Table 6
SUMMARY OF VISUAL ACUITY EFFECTIVENESS ENDPOINTS
(Amendment 10, Table 6, p. 71)

BCVA Endpoints	6 Months n (%) % CI	9 Months n (%) % CI	12 Months n (%) % CI	18 Months n (%) % CI	24 Months n (%) % CI
Effectiveness (N=)	201	195	192	179	147
Overall Effectiveness Endpoint ≥2 lines gain of BCDVA or BCNVA*	***179 (89.1%) 84.7%, 92.5%***	***175 (89.7%) 85.4%, 93.1%***	***173 (90.1%) 85.8%, 93.4%***	***156 (87.2%) 82.3%, 91.1%***	***126 (85.7%) 80.1%, 90.2%***
Binomial exact p-value for Ha: > 50%	***<.0001***	***<.0001***	***<.0001***	***<.0001***	***<.0001***
≥2 lines gain of BCDVA and BCNVA*	138 (68.7%) 62.8%, 74.1%	134 (68.7%) 62.8%, 74.2%	141 (73.4%) 67.7%, 78.6%	127 (70.9%) 64.9%, 76.5%	99 (67.3%) 60.4%, 73.7%
Not reported/IMT removal	1	1	2	1	1
Total	202	196	194	180	148

These data have been updated since the original PMA and panel meeting. The most important time points for consideration are at 12 and 24 months. At 12 months, 90.1% (N=173) achieved a gain of BCDVA or BCNVA of ≥ 2 lines. At 24 months, 86.1% (N=149) achieved a gain of BCDVA or BCNVA of ≥ 2 lines. At 12 months, 73.4% (N=141) achieved ≥ 2 lines of gain of BCDVA AND BCNVA. At 24 months, 65.9% (N=114) achieved ≥ 2 lines of gain of BCDVA AND BCNVA.

5.5.4.1 Best Corrected Distance Visual Acuity (BCDVA)

At 6 months 156/201 (77.6%) eyes gained at least two lines of BCDVA, 126/201 (62.7%) gained at least three lines of BCDVA, 79/201 (39.3%) gained at least four lines of BCDVA, 40/201 (19.9%) gained at least five lines of BCDVA, and 14/201 (7.0%) gained at least six lines of BCDVA. At 12 months, 155/193 (80.3%) eyes gained at least two lines, 128/193 (66.3%) eyes gained at least three lines, 87/193 (45.1%) eyes gained at least four lines, 49/193 (25.4%) eyes gained at least five lines, and 21/193 (10.9%) gained at least 6 lines of BCDVA. Similar outcomes were reported at 18 and 24 months, with approximately 75% of eyes gaining at least 2 lines, over 60% gaining at least 3 lines, over 40% gaining $\geq$ 4 lines, about 20% with a gain of $\geq$ 5 lines and approximately 10% with a gain of at least 6 lines of BCDVA. The mean increase in lines of BCDVA was 3.3 lines (S.D. 2.1) at 6 months, 3.3 lines (S.D. 2.3) at 9 months, 3.4 lines (S.D. 2.3) at 12 months, 3.3 lines (S.D. 2.2) at 18 months, and 3.1 lines (S.D. 2.2) at 24 months. These gains in BCDVA were both statistically and clinically significant. A gain of 2 lines or more was reported for 69% and 68% at 36 and 48 months respectively in the long-term follow-up study of the IMT. 53% and 48% had increases of greater than or equal to 3 lines. Mean BCVA are shown in Table 7. In the PMA submission, the sponsor had only reported gains in lines of acuity instead of actual acuities. Upon FDA's request, the sponsor provided the table of mean BCVA at Baseline, 12 and 24 months from protocol IMT-002.

Mean BCDVA improved from 20/312 at baseline to 20/141 at 12 months and to 20/149 at 24 months. Mean BCNVA at 8 inches improved from 20/315 at baseline to 20/181 at 12 months and to 20/190 at 24 months. Mean BCNVA at 16 inches improved from 20/262 at baseline to 20/149 at 12 months and to 20/157 at 24 months.

Table 7
MEAN BCVA AT BASELINE, 12 MONTHS AND 24 MONTHS
IMT-IMPLANTED EYES - LMT-002
(Amendment 14, page 20, Table 5.1)

	Baseline		12 Months		24 Months	
	N	Mean	N	Mean	N	Mean
Mean BCDVA **95% CI**	206	**20/312** (20/334, 20/291)	193	**20/141** (20/152, 20/131)	173	**20/149** (20/161, 20/138)
Mean BCNVA at 8" **95% CI**	206	**20/315** (20/341, 20/291)	192	**20/181** (20/196, 20/167)	173	**20/190** (20/207, 20/174)
Mean BCNVA at 16" **95% CI**	206	**20/262** (20/282, 20/244)	192	**20/149** (20/161, 20/138)	173	**20/157** (20/170, 20/145)

During the IMT-002-LTM trial, subjects maintained improvements in BCDVA (Table 8) compared to baseline levels. At 36 and 48 month after IMT implant,

approximately 70% of IMT-002-LTM subjects had a 2-line or greater improvement in BCDVA and approximately 50% had a 3-line improvement in BCDVA.

Table 8
CUMULATIVE BCDVA IMPROVEMENT FROM BASELINE
IMT-IMPLANTED EYES – LTM – 002
(Amendment 13, p. 25)

	36 Months	**48 Months**
	n (%)	**n (%)**
N	74	96
Gain ≥ 3 lines	39 (53%)	46 (48%)
Gain ≥ 2 lines	51 (69%)	65 (68%)
Gain ≥ 1 lines	63 (85%)	75 (78%)

Likewise, mean BCDVA improvements were generally retained at 36 and 48 months (protocol IMT-002LTM) in IMT implanted eyes (Table 9). There was a slight decline in BCDVA at 48 months.

Table 9
MEAN BCDVA AT BASELINE, 36 MONTHS AND 48 MONTHS
IMT-IMPLANTED EYES
IMT-002 AND IMT-002-LTM
(Amendment 13, p. 25)

BCDVA	**Baseline**	**36 Months**	**48 Months**
IMT-Implanted Eyes			
N	206	74	96
Mean 95% CI	**20/312** (20/334, 20/291)	**20/156** (20/175, 20/139)	**20/171** (20/191, 20/152)

Stratification by age at implant or gender did not affect the improvement in BCDVA. When BCDVA was stratified by the two IMT models, i.e., WA 3.0X and WA 2.2X, better visual outcomes were observed in subjects implanted with the WA 3.0X at 12 and 18 months than with the 2.2X.

At 12 months, 20.0% of subjects with moderate impairment gained three or more lines of BCDVA. Sixty-one and eight tenths percent (61.8%) of subjects with severe impairment (pre-op BCDVA 20/161 to 20/400) gained three or more lines of BCDVA and 88.9% of subjects with profound impairment gained two or more lines of BCDVA. This difference was statistically significant ($p < 0.001$). At 18 months postop, 26.3% of subjects with moderate impairment and 77.6% of those with profound impairment gained at least three lines of BCDVA. At 24 months, 23.5% of subjects with moderate impairment, 55.4% of eyes with severe impairment, and 76.6% of eyes with profound impairment gained at least three lines of BCDVA. At 36 months, 66% with moderate and 89.5% with profound vision impairment gained 2 or

more lines of acuity; and, at 48 months 65.5% with moderate and 82.1% with profound vision impairment gained 2 or more lines of BCDVA. Thus, subjects with profound impairment gained considerably more lines of BCDVA than subjects with moderate impairment at 12, 18, 24, 36 and 48 months.

5.5.4.2 Best Corrected Near Visual Acuity (BCNVA) - Protocol IMT-002

BCNVA was evaluated at both eight (8) and sixteen (16) inches for all of the near measurements (in this section, unless specific distance is indicated, BCNVA refers to both distances). The change in the best corrected near visual acuity (BCNVA) was calculated for each eye based on the M-value. For example, a change from 8.0M to 6.3M means a one-line improvement in visual acuity and a change from 2.5M to 3.2M means a one-line decrease in visual acuity. For simplicity of the calculation, the M-values were converted to the corresponding LogMAR value. Near visual acuity assessments were based on Sloan M-unit values, not on the number of letters correctly read. If only 1 or 2 letters could be read correctly at the 8.0M line, which is the worst line on the reading card used in this study, a visual acuity of 10.0M was recorded. If none of the letters could be read correctly, a visual acuity of 12.5M was recorded.

At 8 inches, a gain of at least 2 lines of BCNVA was reported for 137/201 (68.2%) eyes, a gain of ≥ 3 lines of BCNVA was reported for 98/201 (48.8%), a gain of ≥ 4 lines of BCNVA was reported for 61/201 (30.3%) eyes, a gain of ≥ 5 lines of BCNVA was reported for 38/201 (18.9%), and a gain of ≥ 6 lines of BCNVA was reported for 18/201 (9.0%) at 6 months. At 12 months postop, 82.8% (159) of eyes and 77.5% (134) had a gain of ≥ 2 lines of BCNVA. A gain of ≥ 3 lines was reported for approximately 67.7% (130) at 12 months and 63.3% (109) at 24 months, a gain of ≥ 4 lines of BCNVA in 49% (94) at 12 months and 43.9% (76) of eyes at 24 months, a gain of ≥ 5 lines in close to 28.6% (55)of eyes at 12 months and 24.3% (42) at 24 months. The mean line increase in BCNVA at 8 inches was stable over time with a gain of 2.3 lines (S.D. 2.6) at 6 months, 2.3 lines (S.D. 2.8) at 9 months, 2.4 lines (S.D. 2.9) at 12 months, 2.4 lines (S.D. 2.7) at 18 months, and 2.3 lines (S.D. 3.0) at 24 months.

At 24 months, subjects with profound impairment gained considerably more lines of BCNVA at 8” than subjects with moderate impairment. The mean line increase in BCNVA at 16 inches was 2.1 lines (S.D. 2.4) at 6 months, 2.4 lines (S.D. 2.4) at 9 months, 2.4 lines (S.D. 2.5) at 12 months, 2.3 lines (S.D. 2.4) at 18 months, and 2.3 lines (S.D. 2.6) at 24 months. A gain of ≥ 2 lines of BCNVA at 8 or 16 inches was reported for eyes with moderate vision impairment at 12 months in 80.9% (93) eyes and 87.1% (54) for eyes with profound vision loss. For the eyes with moderate vision impairment, 64.3% (74) gained ≥ 3 lines, 43.5% (50) gained ≥ 4 lines, and 23.5% (27) gained ≥ 5 lines at 8 or 16 inches. At 24 months, 77.9% (81) of eyes with moderate vision impairment and 80% (44) of those with profound vision loss experienced an increase of ≥ 2 lines of BCNVA at 8 or 16 inches. Those with moderate vision impairment respectively experienced gains of near acuity of 58.7% (61), 41.3% (43) and 21.2% (22) of ≥ 3, 4, and 5 lines. For those with profound

vision loss, these rates were 74.5% (41), 52.7% (29), and 32.7% (18) for ≥ 3, 4, and 5 lines respectively. On the average, more than a third of the implanted eyes gained ≥ 4 lines of BCNVA across the various examination intervals within the investigation. Of particular note is that greater than 20% up to 32% of eyes in the study cohort gained 5 or more lines of BCNVA at these near testing distances. A gain of 3 or more lines was generally consistent when best corrected near acuity was measured at 8 inches or at 16 inches. The impact of stratification factors was observed at 18 and 24 months. Those eyes implanted with WA 3.0X and eyes with profound impairment gained significantly more lines of BCNVA at 16 inches than eyes implanted with WA 2.0X and moderate impairment respectively.

5.5.4.3 Improvement in BCDVA and BCNVA – Protocol IMT-002

To demonstrate that the IMT can improve both distance and near visual acuity, the improvement in BCNVA at 8 or 16 inches was correlated with the improvement in BCDVA for all eyes at 12 months. Data was available for BCDVA and BCNVA at 12 months for 193 eyes. 83.4% of subjects (161/193) experienced a gain of both best corrected distance and near acuity at 12 months.

At 12 months, a gain of ≥ 2 lines or more in both best corrected distance and near visual acuity was achieved by 73.1% (141/193) of eyes and a gain of or ≥ 3 lines was reported for 52.8% (102/193) of subjects, respectively.

At 18 months, 70.9% (127/179) gained ≥ 2 lines of BCNVA as well as > 2 lines BCDVA. Close to 50% of eyes (89/179) gained ≥ 3 lines of BCDVA and ≥ 3 lines of BCNVA.

At 24 months, 67.3% (99/147) gained ≥ 2 lines of BCNVA with a gain of ≥ 2 lines BCDVA. At 24 months, 51.0% of eyes (75/147) had a gain of ≥ 3 lines of BCDVA with a gain of ≥ 3 lines of BCNVA.

5.5.4.4 Effect of Pre-operative Parameters on Effectiveness Outcomes – Protocol IMT-002

A GEE analysis was performed on the primary effectiveness target for 12 to 24 months. Age at implant, postoperative visit and gender were found to have an effect on the improvement in BCDVA. The moderate impairment group had the lowest success rate among the three preoperative BCDVA groups, with more severely impaired eyes achieving the most significant improvement in vision. Acuity increased from the youngest age group to the oldest age group for subjects with a 2.2X IMT implant. For subjects with a 3.0X IMT implant the improvement in visual acuity among the three younger age groups were similar, but the oldest age group had the lowest success rate among the four age groups. The improvement in visual acuity at 12 months was slightly higher for female subjects than for males. However, the proportion of eyes in female subjects with improvement in visual acuity decreased about 7% at 18 and 24 months, while for males subjects the proportion of eyes

achieving an improvement in visual acuity remained relatively constant between 12 and 24 months.

5.5.4.5 Effect of Cataract Removal and IOL Implantation on Change in Mean BCDVA from Pre-IOL BCDVA

Neither protocol utilized a control group. Taking into account the improvement in visual acuity attributed to the removal of the cataract, and comparing it to the predicted visual acuity is difficult. Subsequently, the sponsor was asked to analyze the influence of the baseline visual performance of the operated eye on post-operative visual performance.

In response, the sponsor stated that they believe that the data presented on 12 subjects in Amendment 007 were sufficient to determine the visual acuity improvement associated with cataract removal and intraocular lens (IOL) implantation. This is based on the fact that the sample size of 12 cataract surgery/IOL implanted eyes and 193 IMT-implanted eyes provides statistical power of more than 95% to detect the difference between 0.5 lines mean gain in BCDVA for cataract surgery and 3.0 lines mean gain in BCDVA following IMT implantation, given a standard deviation of 2.5 lines and alpha of 5%.

In Amendment 10 the sponsor provided data on 10 additional fellow eyes that have undergone cataract extraction and IOL implantation, providing a control group of 22 eyes with visual acuity outcomes following cataract surgery. Importantly, the comparison of these 22 cataract surgery/IOL-implanted eyes and the 193 IMT-implanted eyes allows for statistical power of more than 95% to detect the difference between 0.5 lines mean gain in vision for cataract surgery and 2.0 lines mean in vision following IMT implantation, assuming a standard deviation of 2.5 lines and alpha of 5%.

Table 10 presents the mean change in BCDVA from baseline (time of enrollment) for the 22 fellow eyes that underwent cataract extraction and IOL implantation was 0.35 lines (SD 2.14), as compared to 3.43 lines (SD 2.31) for the IMT-implanted population at 12 months. The improvement of 0.35 lines is consistent with the change in visual acuity of 0.38 lines in the eyes in which IMT implantation was aborted and an IOL was implanted.

In the 6 IMT-implanted eyes that underwent explantation and IOL placement at a distance from the original surgery, the mean change in visual acuity from the pre-IOL BCDVA was -2.2 lines (SD 1.05). This loss of lines of vision reflects the removal of the IMT from these eyes, and the vision correction attributable to the implant in these 6 eyes.

Table 10
Change in BCDVA from Baseline
FOLLOWING CATARACT REMOVAL AND IOL IMPLANTATION
(Amendment 14, p. 28)

	All Eyes with Cataract Removal and IOL Implantation				IMT-Implanted Eyes at 12 Months
	Fellow Eyes of Subjects with Cataract Surgery During Study	IMT Eyes with Aborted IMT Implant & with IOL Implant	IMT Eyes with IMT Removal Postoperatively & with IOL Implant	Overall	
N	**22**	9	6	37	**193**
Mean Lines Change in BCDVA (95% CI)	**0.35 (-0.60, 1.29)**	0.38 (-0.32, 1.07)	-0.20 (-2.24, 1.84)	0.26 (-0.35, 0.88)	**3.43 (3.10, 3.76)**

Thus, in this population of subjects with moderate to profound vision impairment, defined as best corrected visual acuity of 20/80 to 20/800, cataract removal and IOL implantation was not associated with a clinically relevant increase in lines of BCDVA, which on average, was less than 1 line of vision within the variability of measurement.

The effect of cataract removal on visual acuity in fellow eyes with an IOL as compared to IMT eyes was further analyzed. Mean and median lines of visual acuity change for a 21-subject cohort with data for the IMT-implanted eye and the contralateral fellow eye were analyzed; 21 subjects are included in this analysis (rather than 22 subjects) since visual acuity data was not available within 12 months of IOL implantation for the fellow eye of one subject. The paired difference (Table 11) in mean change in BCDVA between IMT-implanted eyes and the contralateral fellow eyes was 3.2 lines (p=0.0002). Additionally, the confidence intervals for the IOL-implanted fellow eyes and the IMT-implanted eyes do not overlap.

Table 11
EFFECT OF CATARACT REMOVAL AND IOL IMPLANT ON CHANGE IN MEAN BCDVA FELLOW EYES WITH IOL IMPLANT DURING STUDY VERSUS 12-MONTH BCDVA CHANGE IN THE CORRESPONDING IMT EYES
(Amendment 10, Table 47, p. 110)

Eyes	N	Mean (SD)	95% CI	Median	P-value[1]
Fellow Eyes	21	1.0 Lines (2.0 Lines)	0.1 Lines, 1.9 Lines	1.0 Lines	
IMT Eyes	21	3.7 Lines (1.7 Lines)	2.9 Lines, 4.5 Lines	4.2 Lines	
Paired Difference	21	2.7 Lines (2.7 Lines)	1.5 Lines, 3.9 Lines	3.2 Lines	0.0002

Post-IOL BCDVA Change in Fellow Eyes = Change from the last available BCDVA prior to the IOL implant to the last available BCDVA within 12 months post-IOL
N = number of non-missing BCDVA.
Wilcoxon Signed-Rank Test.

The sponsor conducted an additional analysis to compare the improvements in visual acuity between eyes with bilateral geographic atrophy and bilateral disciform scars. Of the 22 IMT-implanted subjects in which a fellow eye underwent cataract surgery and IOL implantation during the course of follow-up for Protocol IMT-002, bilateral geographic atrophy was present in 9 subjects and disciform scar was found bilaterally in 7 subjects. The remaining 6 subjects were not included in this table since the 12 eyes were distributed among 5 different combinations of AMD, such that each group included only 1-2 subjects. In four of the 6 subjects, both eyes had the same AMD presentation. Specifically, 2 subjects had combined disciform scar and geographic atrophy in both eyes; 1 subject had drusen and disciform scar in both eyes; 1 subject had a combination of geographic atrophy, drusen and disciform scar in both eyes. In the remaining 2 subjects, 1 subject had geographic atrophy in the IMT-implanted eye and disciform scar in the fellow eye and the other subject had disciform scar in the IMT implanted eye and geographic atrophy combined with disciform scar in the fellow eye. At baseline (Table 49 in A10), visual acuity was lower for the IMT-implanted eyes than for the fellow eyes in both the eyes with geographic atrophy and the eyes with disciform scar. However, the between-eye difference in baseline BCVA was smaller in the subjects with bilateral disciform scar than in the subjects with bilateral geographic atrophy.

The change in BCDVA following cataract removal and IOL implantation in the fellow eyes is less than 1 line of BCVA for both the subsets of eyes with bilateral geographic atrophy and bilateral disciform scar, even though the eyes with bilateral disciform scar were more closely matched for baseline BCVA. In striking contrast, the IMT-implanted eyes with geographic atrophy experienced a gain of 4.5 lines from baseline to 12 months and the IMT-implanted eyes with disciform scar had a gain of 2.7 lines at 12 months.

The sponsor has provided several analyses to demonstrate the effect of cataract removal on improvement of visual acuity in comparison to the improvement obtained by cataract removal coupled with IMT implantation. While the numbers of eyes upon which these analyses were performed is small, the sponsor believes that that there is sufficient statistical power to support the differences found. The sponsor has provided Table 12 of BCDVA for the IMT and for the external telescope after adjusting for the effect of cataract removal.

Table 12
BCDVA FOR IMT AND FOR EXTERNAL TELESCOPE
ADJUSTED FOR EFFECT OF CATARACT REMOVAL (0.35 LINES)
LOGMAR (SNELLEN EQUIVALENT)
(Amendment 10, Table 50, p. 115)

	Statistics	Overall	WA 2.2X	WA 3.0X
Actual BCDVA at Baseline and 12 Months for IMT-Implanted Eyes				
Baseline	N	206	115	91
	Mean	1.193 (20/311.7)	1.177 (20/300.7)	1.213 (20/326.3)
	SD	0.214	0.226	0.198
12-Month	N	193	110	83
	Mean	0.847 (20/140.6)	0.880 (20/151.6)	0.804 (20/127.3)
	SD	0.228	0.245	0.196
Actual BCDVA Adjusted at Baseline for Cataract Effect and Actual at 12 Months for IMT-Implanted Eyes				
Baseline	N	206	115	91
	Mean	1.158 (20/287.6)	1.142 (20/277.4)	1.178 (20/301.0)
	SD	0.214	0.226	0.198
12-Month	N	193	110	83
	Mean	0.847 (20/140.6)	0.880 (20/151.6)	0.804 (20/127.3)
	SD	0.228	0.245	0.196
Actual Baseline BCDVA and External Telescope BCDVA Adjusted for Cataract Effect				
Baseline	N	206	115	91
	Mean	1.193 (20/311.7)	1.177 (20/300.7)	1.213 (20/326.3)
	SD	0.214	0.226	0.198
External Telescope	N	206	115	91
	Mean	0.836 (20/137.2)	0.847 (20/140.8)	0.823 (20/132.9)
	SD	0.209	0.225	0.187

* WA 2.2x and WA 3.0X refer to full diameter external telescopes, not wide-angle telescopes.

To address the theoretical versus achieved gains in VA issue, it was determined that subjects with severe to profound visual impairment due to end stage AMD did not achieve the theoretical gains in visual acuity when visual acuity was assessed using a wide field external telescope (i.e., 91% and 77% for the WA 2.2X and WA 3.0X models, respectively, as reflected in the figure below. The differences between theoretical (external telescope) and achieved were 0.3 lines for the 2.2X and more than 1 line for the 3.0X external telescopes as described in Figure 3 .

Figure 3

(Amendment 007, Figure 12, p.121)

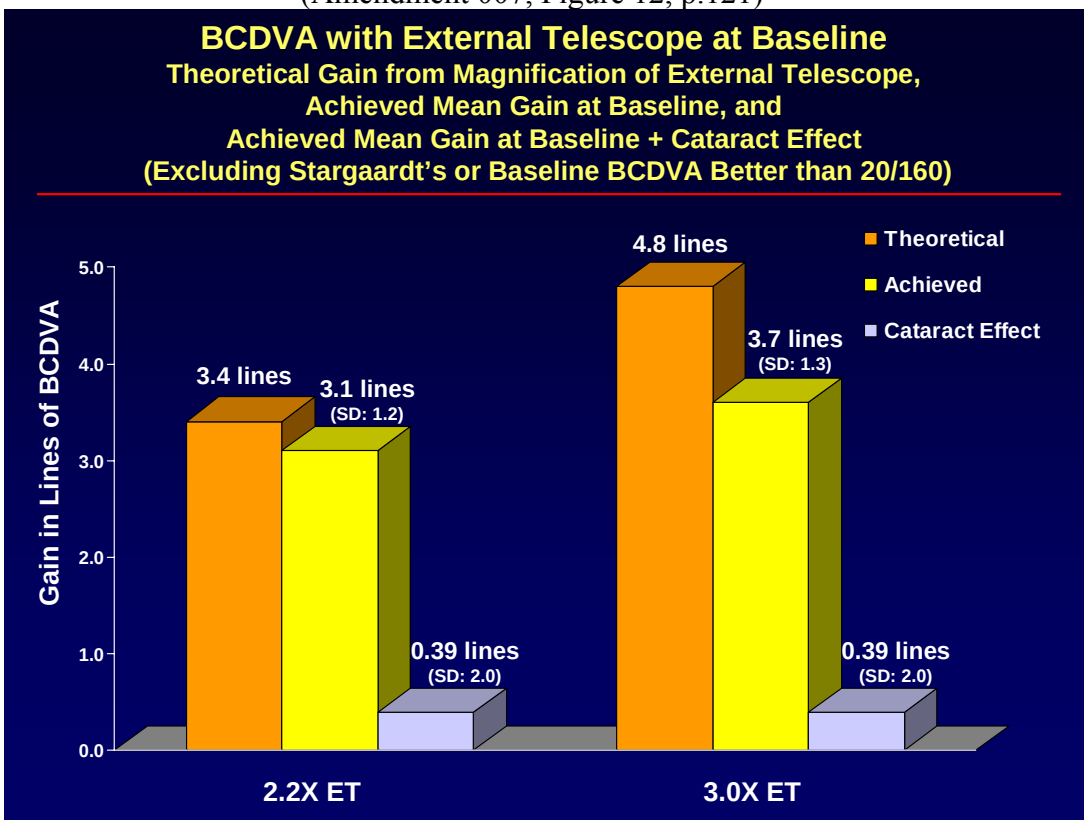

The difference in visual acuity between IMT-implanted eyes that were worse versus those that were better or the same at baseline persisted through the course of the study. For all IMT-implanted eyes and the 24-month consistent cohort, the difference was largest at baseline and smaller at follow-up visits, with relatively small between-group differences. At 12 and 24 months, IMT subjects who had worse baseline BCDVA demonstrated greater improvement. However, if the IMT implanted eye had better/same visual acuity at baseline, visual acuity improvement was better maintained postoperatively. The difference in mean BCDVA when the IMT-implanted eye is either the worse eye or the better/same eye at baseline is very small. Postoperatively, the between group differences are 0.07 logMAR when the clinical results are stratified by baseline visual acuity (results are similar for all analyses presented). Based upon these data, it appears that the selection of the eye to be implanted (i.e., better eye or worse eye) does not have significant effect on postoperative BCDVA. These data are compared in the two tables below (Tables 13-14).

Table 13
MEAN BCDVA
COMPARISON OF POSTOPERATIVE BCDVA FOR IMT-IMPLANTED EYES WITH BASELINE BCDVA BETTER OR SAME VERSUS BASELINE BCDVA WORSE
ALL IMT-IMPLANTED EYES
(Amendment 007, Table 71, p.122)

	Preop		12 Months		24 Months	
	IMT Eye Better or Same at Baseline	IMT Eye Worse at Baseline	IMT Eye Better or Same at Baseline	IMT Eye Worse at Baseline	IMT Eye Better or Same at Baseline	IMT Eye Worse at Baseline
N	64	142	59	134	53	120
Mean	1.10 (20/252)	1.23 (20/343)	0.83 (20/134)	0.86 (20/144)	0.82 (20/131)	0.90 (20/157)
SD	0.20	0.21	0.26	0.22	0.20	0.23
Median	1.11 (20/258)	1.24 (20/348)	0.82 (20/132)	0.86 (20/145)	0.80 (20/126)	0.90 (20/159)
Range	0.60, 1.50 (20/80,20/632)	0.70, 1.64 (20/100,20/873)	0.44, 1.70 (20/55,20/1002)	0.32, 1.70 (20/42,20/1002)	0.44, 1.38 (20/55,20/480)	0.20, 1.44 (20/32,20/551)

Table 14
COMPARISON OF POSTOPERATIVE BCDVA FOR IMT-IMPLANTED EYES WITH BASELINE BCDVA BETTER OR SAME VERSUS BASELINE BCDVA WORSE
24-MONTH IMT-IMPLANTED CONSISTENT COHORT
(Amendment 7, Table 72, p. 122)

	Preop		12 Months		24 Months	
	IMT Eye Better or Same at Baseline	IMT Eye Worse at Baseline	IMT Eye Better or Same at Baseline	IMT Eye Worse at Baseline	IMT Eye Better or Same at Baseline	IMT Eye Worse at Baseline
N	52	114	52	114	52	114
Mean	1.07 (20/236)	1.24 (20/344)	0.81 (20/130)	0.84 (20/140)	0.82 (20/131)	0.89 (20/155)
SD	0.21	0.21	0.23	0.21	0.21	0.23
Median	1.04 (20/219)	1.23 (20/340)	0.82 (20/132)	0.85 (20/142)	0.80 (20/126)	0.90 (20/159)
Range	0.60, 1.44 (20/80,20/551)	0.70, 1.64 (20/100,20/873)	0.44, 1.70 (20/55,20/1002)	0.32, 1.42 (20/42,20/526)	0.44, 1.38 (20/55,20/480)	0.20, 1.44 (20/32,20/551)

Panel members will be asked to take all of the above analyses / outcomes into consideration in their deliberations of the IMT's effectiveness for the proposed population.

5.5.4.6 Quality of Life Assessment – IMT-002 (only)

The sponsor administered the National Eye Institute Visual Function (NEI-VFQ) and Activities of Daily Living (ADL) Questionnaires.

The VFQ-25 subscales of general vision, near activities, and distance activities have been described as particularly important in demonstrating the difficulty individuals with bilateral severe AMD have in performing daily activities. At 12 months these respective subscales improved by 14.0 points, 11.2 points, and 7.9 points. Additionally, clinically significant improvements across all vision specific subscales (social functioning, mental health, role difficulties, and dependency) were observed. In subscales where no improvement or a decline in performance was expected (color vision, driving and peripheral vision), performance was stable or declined.

The most significant point change in the quality of vision subscales was reported for general vision, followed by near vision activities and distance vision activities. While there was a small decrease in the point change for general vision over the 12 month follow-up period for this instrument, the point change remained relatively stable for near vision activities. Improvement in the vision specific activities subscales of the VFQ-25 was most substantial at 3 and 6 months, perhaps reflecting the noticeable change from baseline in best corrected acuity experienced by the majority of study subjects. There was a slight decrease in the point change for social functioning and mental health at 9 months. However, for the most part, the reported values remained relatively stable over time for all four subscales.

When the factors of age, gender, IMT model, preoperative BCDVA and 12-month visual acuity improvement were analyzed, no effect was found for any of these baseline characteristics on the improvement in the VFQ composite score ($p>0.05$). The sponsor provided a data listing of subjects (n=7) whose overall VFQ-25 composite score worsened by more than 15 points at the last available visit. Of these 7 subjects, 5 experienced improvement in at least one measure of acuity, and the remaining 2 subjects had no change in acuity.

The sponsor presented the mean scores and mean changes in scores for both the NEI-VFQ and ADL Questionnaires. FDA requested that the sponsor provide FDA with the frequency analyses for each rating within each category assessed in the NEI-VFQ and ADL questionnaires for both the scores and change in score analyses. The sponsor did comply with this request and furnished a stratification of each question and the frequency of each response within each category in Amendment #2.

FDA had a question about whether the increase in difficulty for certain VFQ-25 items reflected a worsening in performance. The VFQ-25 is a 25 item validated survey of the visual function of the subject and the impact on quality of life. Some questions on items 5, 6, 7, 8, and 9 on the VFQ-25 specifically identify visual activities that are related to the IMT population. For example, with improved visual acuity, one would expect to have an increase in independent mobility, reading street signs and names of stores, and reading ordinary print in newspapers. Subjects reporting extreme difficulty

with the items pertaining to visual function generally showed a lessening of this difficulty by one year postop. However, the number of subjects reporting little and moderate levels of difficulty increased at one year**.** It was unclear from the data reported whether some of the subjects who initially reported extreme difficulty subsequently reported moderate difficulty. FDA requested that the sponsor evaluate pertinent items to determine if the subjects reporting a particular level of difficulty in task performance remained in the same category throughout the first 12 months.

In response to the above question, the sponsor provided shift tables to clarify that an increase in the difficulty of performing a visual task reflected an actual worsening or whether that the result was that some of the subjects who initially reported extreme difficulty were now shifted into a category of subjects reporting moderate difficulty. The shift tables provided by the sponsor verified that this was indeed the case. These shift tables are provided as Tables 90-95 in A7. These tables were requested of the sponsor in order to obtain a better understanding of the distribution of scores on the VFQ-25 and the ADL. The evaluation of this data was not for the purposes of determining effectiveness of the IMT, but for determining the actual meaning of the claimed improvement on the quality of life scales. These items were chosen because they reflect the core visual tasks that are of particular difficulty to macular degeneration subjects. In VFQ-25, questions numbered 5 through 8, there were clinically significant improvements in function. Question 9 relates to mobility in dim light or at night. The number of subjects reporting difficulty or worsening of their ability to function in this type of lighting environment increased. Despite this finding, there were no increases in the number of falls or risks. The sponsor is recommending the use of orientation and mobility specialists as part of the required visual training and rehabilitation program after implantation of the IMT in order to address this concern for future IMT subjects. The labeling has been modified accordingly.

Additionally, the sponsor performed the ADL, a validated survey of the performance of activities of daily living for all implanted IMT subjects. Analysis of the ADL outcomes showed improvement from 41.4 (S.D. 15.6) at baseline to 60.2 (S.D. 17.5) at 3 months, 58.6 (S.D. 18.8) at 6 months, 57.3 (S.D. 19.0) at 9 months, and 55.9 (S.D. 19.6) at 12 months. At 12 months, the mean improvement from baseline was 14.1 points. For the subcategory of mobility, the mean score improved from 53.8 (S.D. 19.1) at baseline to 69.7 (S.D. 18.3) at 3 months, 68.0 (S.D. 19.8) at 6 months, 66.8 (S.D. 20.0) at 9 months, and 66.0 (S.D. 20.2) at 12 months. The mobility subscale improved by 12.0 points at 12 months versus baseline. For the subcategory of distance activities, the mean ADL score improved from 43.7 (S.D. 15.5) at baseline to 61.3 (S.D. 18.3) at 3 months, 59.2 (S.D. 19.0) at 6 months, 59.0 (S.D. 19.6) at 9 months, and 57.3 (S.D. 20.2) at 12 months. The distance activities subscale improved by 13.4 points at 12 month versus baseline. The mean score for the subcategory of near activities improved from 30.9 (S.D. 18.6) at baseline to 53.2 (S.D. 20.1) at 3 months, 52.2 (S.D. 22.3) at 6 months, 49.6 (S.D. 22.2) at 9 months, and 48.5 (S.D. 22.8) at 12 months. The scores for near activities improved by 17.0 points at 12 months versus baseline. For all three ADL constructs (mobility, distance activities and near activities) there was a substantial improvement, the largest being for near activities.

5.5.5 Safety Outcomes

5.5.5.1 Loss of Best Corrected Visual Acuity – Protocol IMT-002

The loss of best corrected visual acuity data for the subjects in protocol IMT-002 are provided in Table 15 below.

Table 15
Loss of BCDVA - IMT-002
Operated Eyes (N = 217)
(Sponsor's executive Summary)

	1 Month n (%) % CI	3 Months n (%) % CI	6 Months n (%) % CI	9 Months n (%) % CI	12 Months n (%) % CI	18 Months n (%) % CI	24 Months n (%) % CI
N=	211	206	204	195	194	181	175
Overall Safety Rate >2 lines loss of BCDVA and no change/loss of BCNVA or >2 lines loss of BCNVA and no change/loss of BCDVA	17 (8.1%) 5.2%, 11.8%	6 (2.9%) 1.3%, 5.7%	10 (4.9%) 2.7%, 8.2%	9 (4.6%) 2.4%, 7.9%	10 (5.2%) 2.8%, 8.6%	9 (5.0%) 2.6%, 8.5%	11 (6.3%) 3.6%, 10.2%
Binomial exact p-value for Ha: safety rate < 10%	0.2071	<.0001	0.0064	0.0048	0.0114	0.0111	0.0587
>2 lines loss of BCDVA and BCNVA	6 (2.8%) 1.2%, 5.5%	2 (1.0%) 0.2%, 3.0%	2 (1.0%) 0.2%, 3.1%	4 (2.1%) 0.7%, 4.6%	2 (1.0%) 0.2%, 3.2%	2 (1.1%) 0.2%, 3.4%	3 (1.7%) 0.5%, 4.4%
>2 lines loss of BCDVA and no change of BCNVA	2 (0.9%) 0.2%, 3.0%	0 (0.0%) 0.0%, 1.4%	1 (0.5%) 0.0%, 2.3%	2 (1.0%) 0.2%, 3.2%	0 (0.0%) 0.0%, 1.5%	1 (0.6%) 0.0%, 2.6%	0 (0.0%) 0.0%, 1.7%
>2 lines loss of BCNVA and no change of BCDVA	9 (4.3%) 2.2%, 7.3%	4 (1.9%) 0.7%, 4.4%	7 (3.4%) 1.6%, 6.3%	3 (1.5%) 0.4%, 3.9%	8 (4.1%) 2.1%, 7.3%	6 (3.3%) 1.5%, 6.4%	8 (4.6%) 2.3%, 8.1%

5.5.5.2 Summary of Acuity Safety Endpoints – Protocol IMT-002

At 12 months, two eyes (2/193 or 1.0%) experienced a loss of more than 2 lines of both BCDVA and BCNVA at 8 inches *or* 16 inches. The loss of BCNVA at 8 or 16 inches was correlated with the loss of BCDVA at 12 months (n=193) in order to determine the number of eyes with a loss of more than 2 lines of both BCDVA and BCNVA. The same analysis was conducted for all eyes treated at 18 months. One hundred seventy-nine (179) eyes had both BCDVA and BCNVA measurements at 18 months. Of these 179 eyes, two (1.1%) experienced a loss of more than 2 lines of

both BCDVA and BCNVA at 8 inches or 16 inches at 18 months. At 24 months, 2 eyes (4%) of the 147 eyes with BCDVA and BCNVA measurements experienced a loss of more than 2 lines of both best corrected distance and near acuity at 8 inches or 16 inches. Five (5) study eyes lost more than 2 lines of both BCDVA and BCNVA during the course of the study.

Protocol IMT-002 specified that preservation of visual acuity was to be assessed in terms of whether more than 10% of IMT-implanted eyes lost >2 lines of either BCDVA or BCNVA without a corresponding improvement in the other. This endpoint was met. At 24 months, 6% of eyes incurred such losses (Table 16).

Table 16
Preservation of BCVA - IMT-002
Operated Eyes (N = 217)
(Amendment 13, Vol. I, p. 36)

	1 Month n (%) % CI	3 Months n (%) % CI	6 Months n (%) % CI	9 Months n (%) % CI	12 Months n (%) % CI	18 Months n (%) % CI	24 Months n (%) % CI
N=	211	206	204	195	194	181	175
Overall Safety Rate >2 lines loss of BCDVA and no change/loss of BCNVA or >2 lines loss of BCNVA and no change/loss of BCDVA	17 (8.1%) 5.2%, 11.8%	6 (2.9%) 1.3%, 5.7%	10 (4.9%) 2.7%, 8.2%	9 (4.6%) 2.4%, 7.9%	10 (5.2%) 2.8%, 8.6%	9 (5.0%) 2.6%, 8.5%	11 (6.3%) 3.6%, 10.2%
Binomial exact p-value for Ha: safety rate < 10%	0.2071	<.0001	0.0064	0.0048	0.0114	0.0111	0.0587
>2 lines loss of BCDVA and BCNVA	6 (2.8%) 1.2%, 5.5%	2 (1.0%) 0.2%, 3.0%	2 (1.0%) 0.2%, 3.1%	4 (2.1%) 0.7%, 4.6%	2 (1.0%) 0.2%, 3.2%	2 (1.1%) 0.2%, 3.4%	3 (1.7%) 0.5%, 4.4%
>2 lines loss of BCDVA and no change of BCNVA	2 (0.9%) 0.2%, 3.0%	0 (0.0%) 0.0%, 1.4%	1 (0.5%) 0.0%, 2.3%	2 (1.0%) 0.2%, 3.2%	0 (0.0%) 0.0%, 1.5%	1 (0.6%) 0.0%, 2.6%	0 (0.0%) 0.0%, 1.7%
>2 lines loss of BCNVA and no change of BCDVA	9 (4.3%) 2.2%, 7.3%	4 (1.9%) 0.7%, 4.4%	7 (3.4%) 1.6%, 6.3%	3 (1.5%) 0.4%, 3.9%	8 (4.1%) 2.1%, 7.3%	6 (3.3%) 1.5%, 6.4%	8 (4.6%) 2.3%, 8.1%

Loss of more than 2 lines of BCDVA was higher in fellow eyes than in IMT-implanted eyes at all visits in the IMT-002 study. Three IMT-implanted eyes (2%) lost more than 2 lines of BCDVA at 24 months versus 16 (9%) of fellow eyes. In the IMT-002-LTM study, as shown in Tables 17a and 17b, 4 IMT-implanted eyes (4%) lost more than 2 lines of BCDVA at 48 months as compared to 11 (11%) fellow eyes.

Table 17a
Loss of Best Corrected Distance Visual Acuity (BCDVA)
IMT Implanted Eyes - IMT-002-LTM
(Amendment 13, Vol. I, p. 37)

BCDVA	36 Months		42 Months		48 Months		54 Months		60 Months	
	n	%	n	%	n	%	n	%	n	%
Loss > 2 lines	2	2.7%	9	8.7%	4	4.2%	2	5.9%	0	0.0%
One-sided upper 95% CL[1]	8.3%		14.6%		9.3%		17.4%		39.3%	
N[2]	74		104		96		34		6	

1 CL = exact confidence limit calculated based on Clopper Pearson method.
2 N = number of eyes with available data.

Table 17b
Loss of Best Corrected Distance Visual Acuity (BCDVA)
Fellow Eyes of IMT Implanted Eyes - IMT-002-LTM
(Amendment 13, Vol. I, p. 37)

BCDVA	36 Months		42 Months		48 Months		54 Months		60 Months	
	n	%	n	%	n	%	n	%	n	%
Loss > 2 lines	10	13.5%	14	13.6%	11	11.5%	5	14.7%	1	16.7%
One-sided upper 95% CL[1]	21.8%		20.4%		18.3%		28.5%		58.2%	
N[2]	74		103		96		34		6	

1 CL = exact confidence limit calculated based on Clopper Pearson method.
2 N = number of eyes with available data.

5.5.5.3 Summary of Adverse Events and Complications

The most prevalent complication reported for the study population of protocol IMT-002 consisted of increased IOP requiring treatment within the first week after surgery, with 50 cases (24.3%) reported at Day 1 and 14 cases (6.8%) reported at Day 7. Reports of increased IOP requiring treatment occurring beyond 7 days were classified as adverse events. The sponsor believes that the increase in IOP is related to the use of high molecular weight viscoelastic material (Healon V) used in the eye and to coat the IMT.

The IMT was removed from 8 eyes of subjects during the IMT-002 study and an additional 4 eyes during the IMT-002-LTM study, a total of 12 postoperative IMT explants.

Eight subjects were dissatisfied with the IMT and requested removal, 4 during the IMT-002 study and 4 during the IMT-002-LTM study. In 4 of these 8 eyes, visual acuity was improved from baseline, and in 2 eyes, visual acuity decreased from baseline. In all cases, explantation was uneventful and resulted in resolution of the dissatisfaction.

The IMT was removed from two eyes in the IMT-002 study at 1 month after implant due to condensation of the telescope portion of the IMT. This was previously discussed in Amendment 7, P050034.

Removal of the IMT was performed in two eyes that underwent corneal transplantation as a result of corneal decompensation in the IMT-002 study. The two eyes with corneal decompensation requiring penetrating keratoplasty are further described in the Corneal Decompensation and Transplantation section.

Ocular adverse events reported in protocol IMT-002 and continuing in protocol IMT-002-LTM

Precipitates and pigment deposits on the IMT were the most commonly reported ongoing adverse event. There were no known sequelae to these precipitates. Guttata was a continuing adverse event in the 7 eyes participating in the LTM study and corneal edema was present in 2 eyes. One of the 2 eyes went on to require a corneal transplant. This transplantation is described as a new adverse event also. The other eye presented with grade 1+ corneal edema at 24 and 42 months but was resolved by 48 months. Dry eye, glaucoma, foreign body sensation, blepharitis and mild posterior capsular opacification were also reported as adverse events.

New ocular adverse events reported in protocol IMT-002-LTM

Adverse events first reported in the LTM protocol include IMT explantation; corneal transplantation ; corneal edema; corneal guttata; precipitates or deposits on the IMT; allergic conjunctivitis; anterior and posterior synechiae; choroidal neovascularization and subretinal hemorrhage; vitreous in the anterior chamber; pupil damage and irregularities; corneal vascularization; epithelial basement membrane dystrophy; meibomian gland dysfunction; and ectropion.

Three subjects under protocol IMT-002-LTM have developed and been treated for choroidal neovascularization. One of these subjects had undergone corneal transplantation during the IMT-002 protocol as a result of significant endothelial cell loss incurred intraoperatively due to iris prolapse. Surgery and postoperative recovery were uneventful. As of 6 months postop, slit lamp examination revealed a normal cornea, normal endothelium, and no cells or flare in the anterior chamber. Two of these three were treated with Avastin and one with Lucentis.

Other adverse events, similar to those that occurred in protocol IMT-002 also occurred. These included increased IOP, posterior synechiae, guttata, distorted pupils, iris damage, precipitates or deposits on the IMT, iris atrophy, etc.

5.5.5.4 <u>Corneal Decompensation and Cases of Late Corneal Edema</u>

Several new incidents of corneal edema continued to occur well after the initial surgery. Late-occurring corneal edema was observed in 13 eyes, which consisted of 6

reports in IMT-002 and 7 reports in IMT-002-LTM. One case occurred in an eye that did not have the IMT implanted due to the occurrence of choroidal hemorrhage during surgery. The 6 subjects with late corneal edema reported in IMT-002 are participating in IMT-002-LTM. Ten of the 13 cases of corneal edema were observed at 24 months or later. The other three cases were observed at 3, 7 and 9 months and were reported as resolved (two of the three resolved in corneal transplant). Corneal thickness was within the normal range for 8 of the 10 eyes with unresolved corneal edema; 2 eyes had corneal edema >700 micron at 24 months. At the time of the prior panel meeting, there had been two cases of corneal transplantation. Currently, there are a total of four cases of corneal decompensation.

Tables 18 and 19 summarize the issues regarding the occurrence late term corneal edema.

Table 18
Corneal Edema Observed by Visit
(All IMT-Implanted Eyes)
(Amendment 15, Table 5, p. 17)

Visit	Number of Available Eyes	Number of Eyes with Corneal Edema	% of Eyes with Corneal Edema
Day 1	206	14	6.8%
Day 7	205	7	3.4%
1 Month	206	3	1.5%
3 Months	201	1	0.5%
6 Months	202	1	0.5%
9 Months	196	1	0.5%
12 Months	194	0	0.0%
18 Months	180	0	0.0%
24 Months	174	3	1.7%
30 Months	3	0	0.0%
36 Months	79	3	3.8%
42 Months	110	6	5.5%
48 Months	102	2	2.0%
54 Months	35	1	2.9%
60 Months	6	0	0.0%

The following 3 IMT-implanted eyes were reported with corneal edema at unscheduled visits without being reported at the scheduled visits: **011-203** at 211 days; 022-203 at 1445 days, 1470 days and 1563 days; 026-209 at 1662 days.

Table 19
IMT-Implanted Eyes with Corneal Decompensation or late Corneal Edema
(FDA-Generated Table)

Approximate Time Postop that Edema was First Noted	Eyes with new corneal edema	Cumulative Number of Eyes with Unresolved Corneal Edema or decompensation	Cumulative % of Implanted Eyes with Unresolved Corneal Edema N=206 Implanted Eyes
(72 Days)	**031-203(U,T)****	1	0.5%
(7 -9 Months)	**013-209(U,T) 011-203 (R)**	2	1.0%
12 Months			1.0%
18 Months			1.0%
24 Months	**003-201(U,T) 012-212(R?)* (026-202R)**	3 - 4	1.5% - 1.9%
30 Months			1.5% - 1.9%
36 Months	**022-203(U) 022-205(U,T) 026-212(U)**	6 - 7	2.9% - 3.4%
42 Months	**001-202(U) 001-208(U)**	8 - 9	3.9% - 4.4%
48 Months			3.9% - 4.4%
54 Months	**026-209(U)**	9 - 10	4.4% - 4.9%
60 Months			4.4% - 4.9%

KEY:
U – UNRESOLVED CORNEAL EDEMA
T – CORNEAL TRANSPLANT
R – RESOLVED EDEMA

***012-212R (REPORTED RESOLVED AT 2.5 YRS, BUT CCT REMAINS INCREASED.)**
****031-203 WAS AT 72 DAYS AND LATER HAD DECOMPENSATION AND A TRANSPLANT AT 6 MONTHS POSTOP.**
PATIENT 008-211 - ABORTED IMT IMPLANT PROCEDURE, REPORTED WITH 1+ CORNEAL EDEMA 36, 42 AND 48 MONTH VISITS

Thus, about 5% of implanted eyes had either corneal edema that remained unresolved or had corneal decompensation (4).

It should be noted that three of the four eyes that had corneal transplants had the IMT implanted with one or both haptics in sulcus. [Original PMA and A007]

5.5.5.5 Posterior Capsular Opacification – Protocol IMT-002

Posterior capsule opacification (PCO) was reported in a single eye (1/174 or 0.6%) at 18 months and in two eyes (2/147 or 1.4%) at 24 months. Both cases were graded "moderate." No Nd:YAG capsulotomies were performed during the study. Nd:YAG laser was used to re-open the peripheral iridectomy in seven eyes.

While the clinical trial did not report any severe occurrences of PCO, the sponsor was asked to provide FDA with a treatment approach for visually significant PCO. Specifically, the sponsor was asked if a YAG capsulotomy can be performed. If a YAG cannot be performed, how can the issue of posterior capsule opacification (PCO) be clinically addressed? Additionally, the sponsor was asked to explain why they believe that IMT may inhibit the development of PCO. The sponsor responded to these issues in Amendment #2 as follows:

"The clinical trial report presented a rate of PCO development of 0.5% (1/206) as a complication in Table A46 of the PMA application. This case was graded as mild by the investigator and did not require any interventional strategies… Categorized as slit lamp findings, there were 32 other eyes reported as having PCO most of which were described as minimal (30/32; 93.8%). Of these 32 eyes, two (2) were graded as moderate. At the last available visit, 24 of the 32 eyes did not show any PCO. This indicates that there was significant discrepancy in reporting. This leaves eight (8) eyes remaining with PCO - 6 were minimal and 2 were considered moderate. In these eight (8) cases, there were no visual sequelae."

FDA asked for clarification as to why 2 eyes with moderate PCO reported as a slit lamp finding were not included with the one case of PCO reported as a complication. This was addressed by the sponsor in a subsequent amendment as follows:

"The reason for inclusion of only this single case as a complication is that the other cases of PCO were not identified by the study investigators as complications on the case report forms, and were therefore tabulated separately based on the slit lamp findings (M4, Volume 2, page 156, Table A24F --- Posterior Capsular Opacification). The case report form for the IMT-002 clinical study provided a grading scale of none, minimal, moderate, or severe for grading of posterior capsule opacification. Based on this grading scale, and FDA's request, the rate of PCO has been revised to include all slit lamp findings of PCO graded as minimal or higher that persisted. Thus, Table 46 (Ocular Complications) has been revised to include the 8 study eyes with PCO (6 minimal and 2 moderate) that were present at the last available visit…"

With regard to the IMT's affect on PCO, the sponsor points to the physical design of the IMT. The sponsor claims that they utilized specific design objectives to minimize the occurrence of PCO. The primary elements included the biocompatibility of the material used, the geometry of the device, its alignment with the capsular bag in order to minimize cell migration, and surgeon related factors. Based on these factors, the IMT was designed using fused silica quartz and a tight radius edge design on the posterior aspect of the IMT which is in contact with the capsular bag. The IMT has a

loop configuration and angulation producing wide contact with the capsular bag and keeping it taut and in contact with the tight radius edge posterior window. Additionally, surgeons were trained in implantation of the IMT. Careful cleaning and polishing of the capsular bag, along with meticulous removal of viscoelastic was stressed. Surgeons were also taught not to fire Nd:YAG laser through the optics of the telescope because they would damage it.

Under protocol IMT-002-LTM, one subject was treated for posterior capsular opacification by surgical needling. A capsulotomy was performed using a combination of peeling and direct vitrectomy. Following capsulotomy, the subject's visual acuity improved by approximately four (4) lines, allowing the eye to regain the initial improvement in vision from baseline BCDVA of 20/726 to 20/320 at 42 months.

With respect to treatment of PCO, should it develop, the sponsor provided the following response:

"YAG capsulotomy has not been performed on any IMT implanted subjects as of the writing of this report. However, the feasibility of performing YAG laser capsulotomy and/or iridectomy has been examined in a rabbit study. YAG capsulotomy was successfully performed in 8 rabbit eyes implanted with the IMT. The results of this study were reported in the Journal of Cataract and Refractive Surgery (2003). The YAG capsulotomy can be performed by focusing the laser beam on the posterior capsule, and aiming and firing the laser through the periphery of the telescope but making sure that the beam does not pass through the optical components of the telescope. The actual procedure for performing the YAG in this manner has been developed. The following method is proposed:

- Maximally dilate the pupil.
- Ensure that there are no adhesions between the pupillary margin of the iris and the telescope apparatus. If adhesions are present, carefully dissect the adhesions with the laser.
- Aim the laser and the posterior capsule and fire the laser around the periphery of the telescope.
- Avoid contact between the laser and optical glass elements of the telescope.
- Do not aim and fire the laser through the optical telescope member of the IMT. (The laser can be aimed through and fired through the PMMA carrier plate and haptics.)
- Needling may be required to complete dislodgement of the membrane from the posterior aspect of the IMT. If needling is utilized, special care should be taken to minimize any force or scratching on the posterior window which could result in damage to the posterior window. Needling may also be used to remove a secondary cataract, either alone or in conjunction with a YAG procedure."

Needling was utilized in 2 subjects with visually significant PCO. One subject had completed the Phase I study (Protocol IMT-001) and the other had participated in and

completed Protocol IMT-002. The first subject successfully underwent the needling procedure. The second subject, described in the paragraph above, who completed the entire 24 month protocol, underwent needling with a pars plana approach two months following completion of the study. The sponsor has revised the Professional Use Information to include a description of cases of visually significant PCO requiring the needling procedure.

The sponsor plans on modifying the subject labeling in the following manner so as to properly inform subjects of the potential for PCO and how it will be managed should it develop:

"A laser may be used to make an opening in the membrane behind the implant, which may improve vision. This laser procedure is usually performed in the office. The procedure takes only a short time and does not require anesthetic. This procedure is known as YAG capsulotomy. Your physician may decide the cloudy membrane is not suitable for laser treatment and may perform an out-patient surgical procedure using conventional surgical instruments that requires local anesthetic."

5.5.5.6 Examination and Treatment of the Posterior Segment

At the last panel meeting, the Panel recommended that additional information be provided regarding procedures for examination and treatment of the posterior segment in subjects implanted with the IMT.

The sponsor has stated that visualization and treatment of the posterior segment, including the fundus, can generally be accomplished following implantation of the IMT using fluorescein angiography, diagnostic photography, ocular coherence tomography (OCT)and/or B scan ultrasonography. In the majority of subjects, fundus visualization can be accomplished at the slit lamp with a 90D hand-held lens; approximately 50-60 degrees of the retina can be observed through the telescope with this approach. Peripheral visualization can be performed by indirect ophthalmoscopy with the eye fully dilated, such that the examiner can observe the retina outside of the IMT. This view of the peripheral retina is limited in eyes in which full dilation is not possible, however, it should be noted that even in a non-implanted or pseudophakic eye, if dilation is limited, visualization of the peripheral retina may not be possible. The procedures for examination and treatment of the posterior segment recommended for IMT implanted subjects were developed from the input from the retinal specialists and anterior segment surgeons who served as investigators in the study. All study investigators participating in the study routinely performed fundus examinations on the study participants, as part of the standard of care for subjects in their practices with retinal disease. Protocol IMT-002 did not require fundus photographs or imaging of the fundus with other methods. However, the sponsor has provided fundus images in Amendments 7 and 10.

All participating investigators in the study were asked to complete a survey regarding the frequency with which they were able to perform thorough examinations of the fundus and posterior segment, and the difficulty in visualizing the fundus during these

exams. Responses were received from 33 of the 38 principal investigators (87% of investigators and 89% of sites).

Since the majority of study investigators routinely performed a fundus examination, a total of 1,821 examinations were performed on the 194 subjects enrolled. Investigators were asked to identify the number of cases in which the presence of the IMT made diagnosis of an ocular condition uncertain, even after the use of fluorescein angiography, diagnostic photography, OCT or B-scan. Uncertainty was reported in only 9 of over 1,800 examinations, for a rate of 0.5%.

Direct visualization of the eye using a 90D lens or indirect ophthalmoscopy was performed in the majority of the study eyes; in 4% of eyes, examinations could not be performed. However, fluorescein angiography, diagnostic photography, OCT and/or B scan ultrasonography was successfully performed in nearly all of the subjects who were unable to be examined with direct visualization. The reasons for difficulty in performing direct visualization examinations included minification, obstruction by the IMT, uncontrollable eye movement, and inability to dilate the eye, glare from reflection from the IMT, poor subject cooperation, and limited view of the retinal periphery.

When asked to rank the method for examination of the posterior pole for development or recurrence of CNV, the majority of the study investigators identified direct visualization with contact or non-contact viewing lenses. Fundus photography and fluorescein angiography, as well as OCT were much lower in ranking, but were ranked similarly. Several investigators reported using a contact lens in situations where visualization was difficult such as unsteady eyes. It was reported in the survey that respondents who had difficulties with direct visualization did not employ the use of a contact lens; thus, these lenses proved to be very important as a tool in examining the fundus in difficult cases.

A copy of the complete survey report is provided in A10 (Attachment 4.2). Based on the information generated in this survey, and on the experience of the study investigators, labeling for the IMT has been revised to recommend that if good visualization cannot be obtained with direct visualization, a contact lens should be added.

5.5.5.7 IMT Clearance

At the July 14, 2006 panel meeting, the sponsor presented preliminary clearance data on 7 eyes. Panel members recommended the collection of additional central and peripheral clearance data to evaluate the impact of anterior chamber depth (ACD) on the safety of subjects implanted with the IMT.

To address issues regarding clearance of the IMT from the corneal endothelium postoperatively, subjects who participated in Protocol IMT-002 were solicited to return for anterior segment imaging, to allow assessment of the clearance of the IMT

from the corneal endothelial surface, centrally and peripherally. Central and peripheral clearances were calculated using a standardized procedure.

To obtain a sufficient number of eyes with the IMT in each stratum of ACD, ultrasound biomicroscopy (UBM) or anterior chamber ocular coherence tomography (AC OCT) images were obtained for 45 IMT-implanted subjects of the 206 IMT implanted eyes in the study. Importantly, the 45 eyes imaged represent a distribution of ACD strata as described in Table 20. Representative images indicating the points of measurement in the eye with the wide-field UBM, standard UBM, and AC OCT were provided. Measurements of both central and peripheral clearance were obtained for 40 of the 45 eyes at investigational sites or local centers with AC OCT or wide-field UBM. Sites with conventional UBM equipment provided central clearance data only (5 of 45 eyes).

Table 20
Distribution of Eyes Imaged by Preoperative ACD
(Amendment 007, Table 53, p. 84)

Preoperative ACD Category	Number of Eyes Imaged (N=45)	Distribution of All IMT-Implanted Eyes by ACD (N=206)
<3.0 mm (Mean 2.8 mm)	15 (33%)	80 (39%)
3.0 mm to 3.5 mm (Mean 3.2 mm)	24 (53%)	92 (45%)
>3.5 mm (Mean 3.6mm)	6 (13%)	34 (16%)

Table 21
Central Clearance from Anterior Surface of IMT to the Corneal Endothelium
All Eyes with Images vs Eyes Grouped by Baseline ACD
(Amendment 007, Table 55, p. 86)

	Distance from IMT to Cornea All Eyes (N=45)	Distance from IMT to Cornea ACD <3.0 mm (N=15)	Distance from IMT to Cornea ACD ≥3.0 mm to 3.5 mm (N=24)	Distance from IMT to Cornea ACD >3.5 mm (N=6)
Mean	2.51	2.48	2.53	2.53
SD	0.33	0.35	0.31	0.38
Median	2.53	2.45	2.55	2.66

Table 22
Peripheral Clearance from Anterior Surface of IMT to the Corneal Endothelium
All Eyes with Images vs Eyes Grouped by Baseline ACD
(Amendment 007, Table 56, p. 86)

	All Eyes Peripheral Clearance Left	Clearance Left ACD <3.0 mm	Clearance Left ACD ≥3.0 to 3.5 mm	Clearance Left ACD >3.5 mm		All Eyes Peripheral Clearance Right	Clearance Right ACD <3.0 mm	Clearance Right ACD ≥3.0 to 3.5 mm	Clearance Right ACD >3.5 mm
N	40	13	22	5		39	13	22	4
Mean	2.17	2.13	2.16	2.31		2.21	2.17	2.21	2.38
SD	0.29	0.32	0.30	0.12		0.35	0.34	0.37	0.26
Median	2.18	2.15	2.16	2.27		2.24	2.22	2.25	2.49

The sponsor found no correlation between baseline anterior chamber depth and postop clearance. This is potentially because removal of the crystalline lens can increase the ACD. The measured central and peripheral clearances are described in Tables 21 and 22, respectively. Assuming a normal distribution, a tolerance interval for 90% of eyes with 95% confidence would have a lower limit at: 2.17-.29×2.05 = 1.57 mm. Therefore, there is 95% confidence that 90% of the eyes will have clearance of at least 1.57 mm. This is for the pooled 40 eye cohort.

5.5.5.8 Specular Microscopy

5.5.5.8.1 Background

The primary safety endpoint was the percent loss of endothelial cell density (ECD) from baseline.

Specular microscopy was used to measure the effect of the device and related surgery on the endothelial cell layer. Each site used either the non-contact Konan or Topcon Specular Microscope to collect images. The minimum ECD required for subject participation in IMT-002 was 1600 cells/mm^2. Three images were obtained at each visit. The mean density from the three images was used for the analysis.

Specular micrographs were sent to a central reading center for analysis and the mean density from all three images was used for statistical analyses. Specular microscopy results from the following two protocols will be discussed in this section.

Protocol IMT-002:

Under Protocol IMT-002 (submitted and approved in 2002) subjects were to be followed for 2 years postoperatively. Specular microscopy was performed preoperatively and at the Month 3, 6, 9, 12, 18 and 24 postoperative examinations in the treated and fellow eyes.

- The analyses of data collected under this protocol were presented at the July 14th, 2006 Panel meeting. Under this protocol, 218 eyes were enrolled, 217 were operated on, and 206 eyes were implanted with the IMT (and did not have it removed intraoperatively). Analyses included statistical regression models that estimated the ECD losses -- both the short-term (surgery-related) loss and the chronic loss rate (See discussion in the Statistical Modeling section of this summary.)
- The 2006 Panel expressed concerns about the endothelial loss. They requested
    - Analysis of morphometric data as collected in specular microscopy, and
    - Additional analyses, using additional data available, of the ECD to establish the acute and chronic rates of loss.

Protocol IMT-002-LTM (long-term monitoring):

Due to the concerns related to the observed endothelial cell loss, the sponsor submitted an IDE supplement in February 2006, with this protocol for extended follow-up of the PMA cohort. In Protocol IMT-002-LTM, specular microscopy was performed at all visits: 30, 36, 42, 48, 54 and 60 months postoperatively. Subjects who had been enrolled in IMT-002 and agreed to consent for the longer follow-up of 5 years, were enrolled. There were no additional entry restrictions in terms of ECD for the LTM protocol. One hundred and twenty nine subjects of the 174 subjects available at the 24-month visit of study IMT-002 enrolled in IMT-002-LTM. At the time of protocol and local IRB approvals, the majority of subjects participating in IMT-002-LTM had passed the 30 month visit window.

In response to concerns about the stability of the endothelial cell layer, the sponsor has at FDA's and the panel's request:

- Submitted longer follow-up data, and additional analyses of the specular microcopy data. (Specular microscopy analyses used only data up to 48 months after surgery, as there were only a small number of eyes with visits available beyond this time point.)
- Analyzed various potential risk factors – contact lens wear, IOP, inflammation, diabetic patients, etc.
- Proposed new Indications, Contraindications, and Warnings to exclude certain subjects from receiving the IMT.
    - Many of these were proposed by the sponsor based upon their analyses of possible "risk factors" in various subject sub-groups.

- One of the new Contraindications contains a "grid" of minimum required preoperative ECD for various subject age/gender groups. This was based upon new statistical model-based estimates of short term and long term ECD loss rates.

For clarity, we designate the eyes that had surgery and had the IMT implanted and not removed intraoperatively as the "All IMT-Implanted" cohort. As the ECD results for "All Enrolled" eyes (218 eyes) were similar to those for "All IMT-Implanted" eyes, (206 eyes), the following discussion will focus on the latter. After analysis of ECD results, the sponsor divided the cohort of "All IMT-Implanted" eyes into the following sub-cohorts which are discussed in the later sections of this summary:

- "Guttata-Free, Large ACD" sub-cohort: Contains only the IMT-implanted eyes which at baseline had no guttata and had anterior chamber depth (ACD) ≥ 3.0 mm. The sponsor used analyses of this sub-cohort (containing 112 implanted eyes) to develop labeling contraindications for baseline ECD.
- Sub-cohort "A": Contains only the IMT-implanted eyes in subjects who at baseline were ≥ 65 years of age, were free of guttata, had anterior chamber depth ≥ 3.0 mm, and were implanted by a "cornea specialist." This corresponds to the subjects in the study (33 implanted eyes) who met the main criteria for the sponsor's proposed Indications, Contraindications, and Warnings.
- Sub-cohort "B": Contains all IMT-Implanted eyes that were not in Sub-cohort "A."

5.5.5.8.2 ECD Results

The goal of the statistical analysis for the primary safety endpoint of this study was to demonstrate that the population mean percentage endothelial cell density (ECD) loss was no greater than 17% at one year post-implantation. [H_0: $\mu \geq 17\%$ vs. H_a: $\mu < 17\%$; were μ is the mean percentage loss from baseline at 12 months.] However, the observed mean percentage decrease for the "All IMT-Implanted" eyes was 25.3% at 12 months. The observed mean percentage decrease from baseline was 27.7% at 24 months. Table 23 below shows mean ECD over time for protocol IMT-002.

Table 23
Endothelial Cell Density
IMT-Implanted Eyes - IMT-002 Study
(Amendment 19, Table 2.A.1)

ECD	Baseline	3 Months	6 Months	9 Months	12 Months	18 Months	24 Months
IMT-Implanted Eyes							
N	206	193	198	190	186	180	171
ECD (Mean, SD) **95%CI**	2496 (354) (2447, 2545)	1995 (585) (1912, 2078)	1937 (580) (1856, 2018)	1891 (572) (1809, 1973)	1871 (592) (1786, 1957)	1878 (618) (1787, 1969)	1808 (596) (1718, 1898)
ECD % Change (Mean, SD) **95%CI**		-20% (21%) (-23%, -17%)	-22% (21%) (-25%, -19%)	-24% (21%) (-27%, -21%)	-25% (21%) (-28%, -22%)	-25% (22%) (-28%, -22%)	-28% (22%) (-31%, -24%)
ECD < 750 cells/mm^2	0 (0%)	6 (3%)	8 (4%)	9 (5%)	9 (5%)	13 (7%)	12 (7%)
ECD < 1000 cells/mm^2	0 (0%)	16 (8%)	17 (9%)	16 (8%)	21 (11%)	21 (12%)	19 (11%)
SUB-Cohort A: IMT-Implanted Eyes of Subjects ≥ 65 Years, with no Guttata, ACD ≥ 3.0 mm and Implanted by a Cornea Specialist							
N	33	29	33	29	30	28	27
ECD (Mean, SD) **95%CI**	2472 (288) (2370, 2574)	2099 (554) (1888, 2310)	2063 (497) (1887, 2239)	2015 (528) (1815, 2216)	2018 (493) (1834, 2202)	1983 (522) (1781, 2186)	1992 (492) (1797, 2187)
ECD % Change (Mean, SD) **95%CI**		-15% (21%) (-23%, -7%)	-16% (18%) (-23%, -10%)	-18% (20%) (-26%, -10%)	-19% (19%) (-26%, -11%)	-20% (20%) (-28%, -13%)	-19% (19%) (-27%, -12%)
ECD < 750 cells/mm^2	0 (0%)	1 (3%)	1 (3%)	1 (3%)	1 (3%)	1 (4%)	0 (0%)
ECD < 1000 cells/mm^2	0 (0%)	1 (3%)	1 (3%)	2 (7%)	1 (3%)	2 (7%)	0 (0%)
SUB-Cohort B: IMT-Implanted Eyes Excluded from SUB-Cohort A							
N	173	164	165	161	156	152	144
ECD (Mean, SD) **95%CI**	2501 (366) (2446, 2556)	1976 (590) (1885, 2067)	1912 (593) (1820, 2003)	1868 (579) (1778, 1958)	1843 (607) (1747, 1939)	1859 (634) (1757, 1960)	1773 (609) (1673, 1874)
ECD % Change (Mean, SD) **95%CI**		-21% (21%) (-24%, -18%)	-24% (21%) (-27%, -20%)	-26% (20%) (-29%, -22%)	-27% (21%) (-30%, -23%)	-26% (23%) (-30%, -22%)	-29% (22%) (-33%, -26%)
ECD < 750 cells/mm^2	0 (0%)	5 (3%)	7 (4%)	8 (5%)	8 (5%)	12 (8%)	12 (8%)
ECD < 1000 cells/mm^2	0 (0%)	15 (9%)	16 (10%)	14 (9%)	20 (13%)	19 (13%)	19 (13%)

Table 24 contains mean ECD over time for protocol IMT-002-LTM (subjects who consented to follow-up past the original 2-year study time period). These eyes showed a mean ECD loss from baseline of 31% at 36 months and 35% and 48 months. Note that protocol IMT-002-LTM collected ECD data on only 70 eyes at 36 months, 101 eyes at 42 months, and 88 eyes at 48 months. [When combining data from the IMT-002 and IMT-002-LTM protocols, results should be interpreted with caution. While demographic characteristics of the group that participated in the LTM study were similar to those of the original IMT-002 study, the mean ECD for the LTM group was lower. Mean ECDs at 24 months were 1758 for the LTM group vs. 1808 for the larger group (a 2.75% difference). The LTM study also contained a significantly larger proportion of eyes with very low ECDs (e.g., <750 cells /mm^2).]

Table 24
Endothelial Cell Density
All IMT-Implanted Eyes - IMT-002-LTM Study
(Amendment 19, Table 2.A.2)

ECD	Baseline	3 Months	6 Months	9 Months	12 Months	18 Months	24 Months	36 Months	42 Months	48 Months
IMT-Implanted Eyes										
N	123	116	120	119	119	118	114	70	101	88
ECD (Mean, SD) **95%CI**	2500 (368) (2434, 2566)	1937 (599) (1827, 2047)	1865 (611) (1754, 1975)	1868 (592) (1760, 1976)	1786 (602) (1677, 1895)	1802 (615) (1690, 1915)	1758 (617) (1644, 1873)	1713 (574) (1576, 1850)	1595 (579) (1481, 1709)	1620 (571) (1499, 1741)
ECD % Change **(Mean, SD)** **95%CI**		-22% (22%) (-26%, -18%)	-25% (22%) (-29%, -21%)	-25% (22%) (-29%, -22%)	-29% (23%) (-33%, -24%)	-28% (23%) (-32%, -24%)	-30% (23%) (-34%, -25%)	-31% (20%) (-36%, -26%)	-36% (22%) (-40%, -32%)	-35% (21%) (-40%, -31%)
ECD < 750 cells/mm^2	0 (0%)	4 (3%)	8 (7%)	7 (6%)	8 (7%)	11 (9%)	11 (10%)	3 (4%)	9 (9%)	7 (8%)
ECD < 1000 cells/mm^2	0 (0%)	11 (9%)	14 (12%)	10 (8%)	17 (14%)	15 (13%)	15 (13%)	8 (11%)	21 (21%)	15 (17%)
SUB-Cohort A: IMT-Implanted Eyes of Subjects ≥ 65 Years, with no Guttata, ACD ≥ 3.0 mm and Implanted by a Cornea Specialist										
N	17	15	17	16	16	16	15	9	12	12
ECD (Mean, SD) **95%CI**	2476 (288) (2328, 2625)	1987 (599) (1655, 2319)	1957 (526) (1687, 2227)	2003 (543) (1714, 2293)	1930 (541) (1641, 2218)	1944 (531) (1662, 2227)	1973 (532) (1678, 2267)	1871 (414) (1553, 2189)	1738 (483) (1431, 2045)	1817 (487) (1507, 2126)
ECD % Change **(Mean, SD)** **95%CI**		-19% (25%) (-33%, -5%)	-20% (21%) (-31%, -9%)	-19% (22%) (-31%, -7%)	-22% (23%) (-34%, -10%)	-21% (22%) (-33%, -10%)	-20% (21%) (-32%, -8%)	-22% (15%) (-33%, -11%)	-29% (21%) (-43%, -16%)	-26% (20%) (-38%, -13%)
ECD < 750 cells/mm^2	0 (0%)	1 (7%)	1 (6%)	1 (6%)	1 (6%)	1 (6%)	0 (0%)	0 (0%)	1 (8%)	1 (8%)
ECD < 1000 cells/mm^2	0 (0%)	1 (7%)	1 (6%)	1 (6%)	1 (6%)	1 (6%)	0 (0%)	0 (0%)	1 (8%)	1 (8%)
SUB-Cohort B: IMT-Implanted Eyes Excluded from Analysis in SUB-Cohort A										
N	106	101	103	103	103	102	99	61	89	76
ECD (Mean, SD) **95%CI**	2504 (380) (2430, 2577)	1929 (602) (1810, 2048)	1850 (625) (1727, 1972)	1847 (599) (1730, 1964)	1764 (611) (1644, 1883)	1780 (626) (1657, 1903)	1726 (624) (1601, 1850)	1690 (593) (1538, 1842)	1576 (591) (1451, 1700)	1589 (580) (1457, 1722)
ECD % Change **(Mean, SD)** **95%CI**		-23% (22%) (-27%, -19%)	-26% (23%) (-31%, -22%)	-26% (21%) (-31%, -22%)	-30% (23%) (-34%, -25%)	-29% (23%) (-33%, -24%)	-31% (23%) (-36%, -26%)	-33% (21%) (-38%, -27%)	-37% (22%) (-42%, -32%)	-37% (21%) (-42%, -32%)
ECD < 750 cells/mm^2	0 (0%)	3 (3%)	7 (7%)	6 (6%)	7 (7%)	10 (10%)	11 (11%)	3 (5%)	8 (9%)	6 (8%)
ECD < 1000 cells/mm^2	0 (0%)	10 (10%)	13 (13%)	9 (9%)	16 (16%)	14 (14%)	15 (15%)	8 (13%)	20 (22%)	14 (18%)

Implantation of the IMT was associated with four key changes in the distribution of the ECD from preop to postop:

a. A lowering of the mean ECD
   i. fairly large decline in first several months after surgery;
   ii. continuing low chronic decline in ECD.
b. An increase in variability of the cohort ECD;
c. A skewing of the distribution toward lower values.

The early decrease in mean ECD and increase in variability is shown in Figure 4. The largest amount of cell loss occurred within the first 3 months from surgery. This surgery-related loss was indicated by a -20% mean change at 3 months compared to baseline.

Figure 4
POSTSURGICAL DECLINE IN ECD
AND INCREASED DISPERSION OF ECD

[figure from prior FDA panel presentation (FDA-generated from IMT-002 data)]

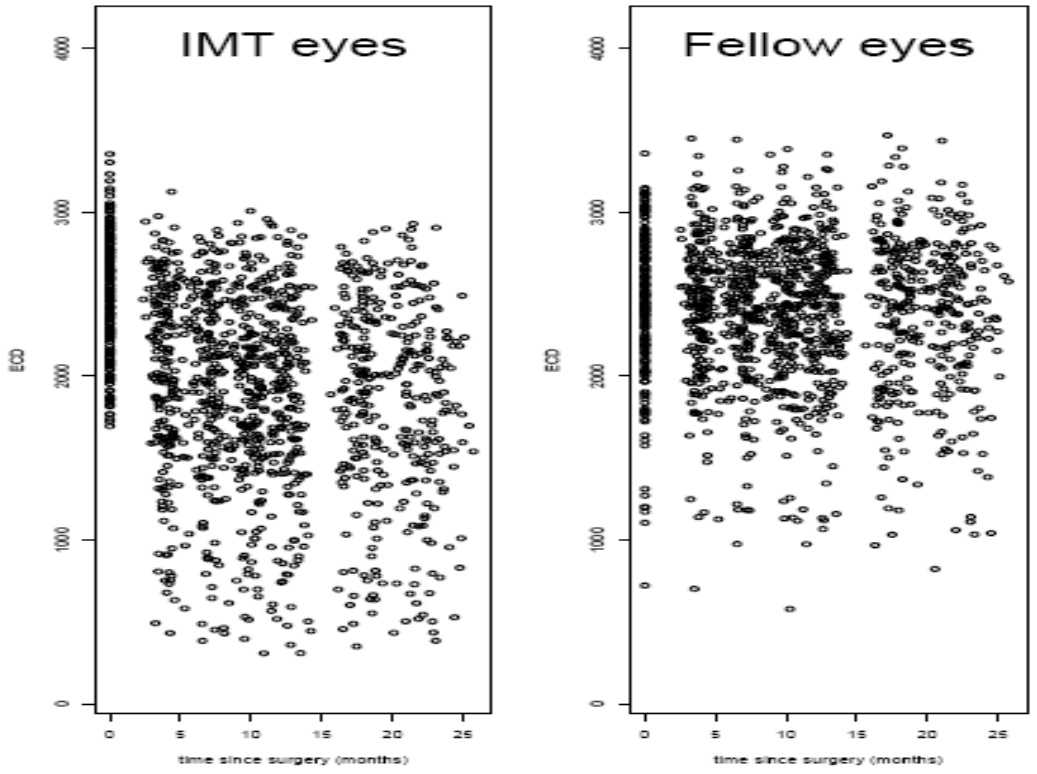

The surgical period change was followed by a much slower chronic loss. Table 25 shows annualized rates of chronic loss for various time spans, but only for the limited

number of eyes that had ECD data at both ends of the time spans. These observed annual rates vary from 2 – 7% depending on which time period is chosen.
Specular microscopy was also done on the "fellow eyes." Fellow eyes did not exhibit a notable loss at the time immediately following surgery, but they did show a slow chronic loss. "In a paired analyses for the period 12 months post IMT implantation to the 48 month visit, ECD percentage change was -3% in fellow eyes and -6% in IMT-implanted eyes, …." [n = 87; See A013, p. 43] (We note that the period of 12 months to 48 months seemed to show the lowest rate of chronic loss for IMT eyes in Table 25.)

Table 25
ANNUALIZED PERCENT CHANGE IN ECD
All IMT-IMPLANTED EYES (paired analysis)
(IMT-002 and IMT-002-LTM)
(Amendment 13, Table 18.1)

	Preop	6 Months	12 Months	24 Months	36 Months	48 Months
ECD						
N	206	198	186	171	70	88
Mean	2496	1937	1871	1808	1713	1620
95% CI	2447, 2545	1856, 2018	1786, 1957	1718, 1898	1576, 1850	1499, 1741
Percent Change in ECD (Between Two Visits 1-Year Apart)						
		Preop to 12 Months	**12 to 24 Months**	**24 to 36 Months**	**36 to 48 Months**	
N		186	169	65	51	
Mean		-25%	-2%	-7%	-2%	
95% CI		-28%, -22%	-4%, 1%	-12%, -2%	-6%, 1%	
Percent Change in ECD						
	Preop to 6 Months	**6 to 48 Months**	**12 to 48 Months**	**24 to 48 Months**	**36 to 48 Months**	
N	198	85	88	86	51	
Mean	-22%	-12%	-7%	-6%	-2%	
95% CI	-25%, -19%	-17%, -7%	-12%, -2%	-10%, -2%	-6%, 1%	
Annualized Percent Change in ECD						
		Annualized 6 to 48 Months	**Annualized 12 to 48 Months**	**Annualized 24 to 48 Months**	**Annualized 36 to 48 Months**	
N		85	88	86	51	
Mean		-3%	-2%	-3%	-3%	
95% CI		-5%, -2%	-4%, -1%	-5%, -1%	-7%, 1%	

N = number of eyes with non-missing data.
Annualized: For each eye, ECD at the end of the interval minus ECD at the beginning of interval, divided by number of months between the interval, and multiplied by 12.

The ECD data at baseline were approximately normally distributed. The skewness of the distribution after IMT implantation is apparent in Figure 5.

Figure 5
Distribution of ECD residuals postop
Bi-Exponential Model Residuals for "Guttata-Free, Large ACD" Implanted Eyes
(Excluding Residuals at Preop Visit)
(Amendment 10, p. 34)

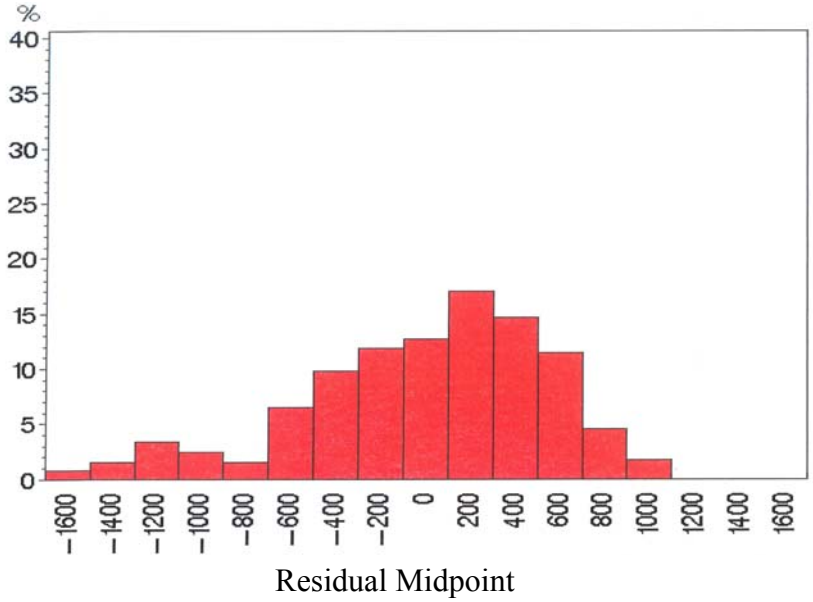

Figure 5 pools all of the postoperative "residuals" (differences of the data points from the best-fit regression curve) for all postoperative visits.

Due to the increase in ECD variance and the skewed distribution after implantation, an analysis of mean changes do not provide a complete picture of the ECD changes.

The percentiles of ECD percentage change from baseline to 3, 12, 18 and 24 months are presented in Table 26.

Table 26
Percentiles of ECD% Change from Baseline
All IMT-Implanted Eyes
(FDA Table 1 from FDA Executive Summary for 2006 Panel Meeting)

Change from baseline	3 months	12 months	18 months	24 months
IMT Eyes				
N	193	186	180	171
Worst 5% pts	-66.82%	-68.85%	-74.15%	-74.55%
Worst 10% pts	-51.97%	-57.72%	-59.55%	-58.92%
Median (50th percentile)	-13.50%	-20.90%	-21.32%	-24.00%
All fellow Eyes				
N	189	186	179	171
Worst 5%	-10.07%	-16.31%	-19.49%	-28.48%
Worst 10%	-7.53%	-10.56%	-12.27%	-15.65%
Median (50th percentile)	-0.63%	-1.31%	-1.17%	-2.70%

Due to the variability of the ECD measurement, this table may overstate the losses in the tails of the distribution. It is important to compare the tabulated losses in the IMT eyes to those in the fellow eyes. For example, at 24 months, the 5% of IMT-implanted eyes that had the greatest loss showed a decrease in ECD of 74.6%, compared to a decrease of 28.5% in the similar group of fellow eyes. It should also be noted that while many eyes had reasonably consistent ECD data over time, a significant number of eyes in the study had highly variable ECD readings, as shown in Figure 6, possibly due to poor visual fixation in this population.

Figure 6
ECD MEASUREMENT VARIABILITY
[figure presented by FDA at July 2006 Panel meeting]

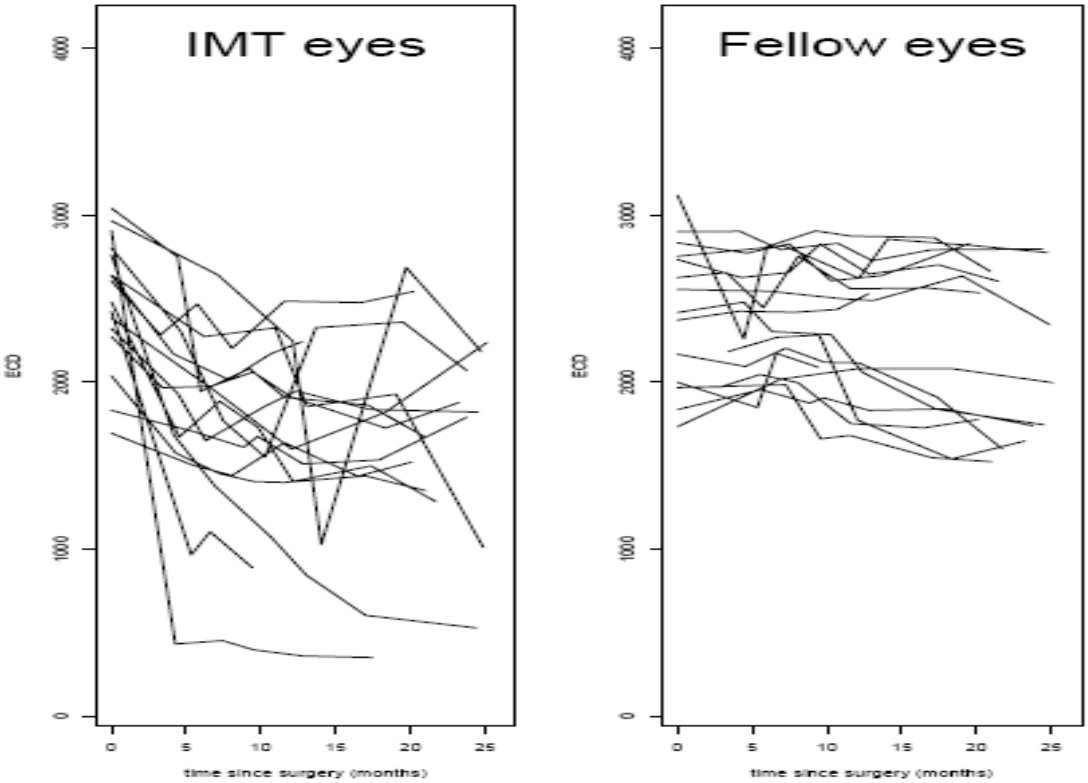

5.5.5.8.3 Statistical Modeling

Prior to the 2006 panel meeting (at which only data out to 24 months postop was presented), the sponsor and the FDA developed piecewise linear statistical models in an attempt to assess the rates of ECD loss over time. [The simple results of the type presented in Table 25 use only the limited number of eyes which have data for the beginning and end of an interval. They portray varying estimates for the chronic rate of loss, depending upon the time period used.] These more sophisticated statistical models use all of the measured ECD values to estimate the chronic loss rate.

These models were presented and discussed at the 2006 meeting (Attachment 1 and 2). The model developed by FDA statisticians was fitted to all of the ECD data (including fellow eyes). It was a mixed effects linear (2-piece) model with a break at 3 months. The first piece estimates the early ECD loss related to surgical trauma and the second piece estimates the chronic loss rate. Looking at the chronic loss (3 – 24 months), the annual loss rate was estimated to be 5.4% in "All IMT-Implanted" eyes

[See Attachment 1, p. 28]. For this chronic period, rates of ECD loss were still significantly different between IMT and fellow eyes.

Subsequent to the 2006 Panel meeting, in Amendment 7, the sponsor introduced a biexponential model of the ECD data as a function of time after surgery. In this submission they also proposed a labeling Contraindication requiring a minimum preoperative ECD for each subject age and gender group. This table of minimum ECDs was called the ECD "grid". The "grid" attempts to assure a reasonably safe end-of-life ECD. The sponsor created the "grid" using:

- the estimates of the post-surgical acute ECD loss and chronic ECD annual rate of loss from the biexponential model; and\
- estimates of average subject life expectancy from life expectancy tables.

This type of biexponential model had been previously used by Armitage, Dick and Bourne[1] and by Patel, Hodge and Bourne[2] in studying ECD trends after ocular surgery. This model does not rely upon determining a "point of stabilization" as the 2-piece models do. Utilizing data from both IMT-002 and IMT-002-LTM, the sponsor has used this model to address the concern about determining the acute and chronic rates of loss, including the updated partial 3 and 4 year data. [In this modeling, each data point was assumed to be statistically independent, despite the fact that measurements at different time points from the same eye are generally correlated.] It should be noted that no evidence has been presented that one type of model is superior to another in the analysis of the data in the IMT study. Additionally, it is noteworthy that the parameters calculated from a model are highly dependent upon the assumptions of that model. Some of these assumptions cannot be verified or disproven. [We note that combining data from the IMT-002 and IMT-002-LTM studies may tend to bias upward the estimate of the chronic loss rate. This is because subjects who continued in the LTM study tended to have somewhat lower ECD counts than those who did not continue past 2 years.]

In order to estimate mean losses, a biexponential model fits the ECD data as the sum of a "fast loss term" (representing surgery-related loss) and a "slow loss term" (representing chronic loss). The model uses the following equation for endothelial cell count as a function of time:

$$ECD(t) = pe^{-at} + qe^{-bt}$$

where:
ECD(t) = Endothelial Cell Density (at time t)
p = baseline ECD value for "fast loss term"

[1] Armitage W, Dick A, Bourne W. Predicting Endothelial Cell Loss and Long-Term Corneal Graft Survival. Inv Ophthalmol Vis Sci 2003;44:3326-31.
[2] Patel SV, Hodge DO, Bourne WM. Corneal endothelium and postoperative outcomes 15 years after penetrating keratoplasty.Trans Am Ophthalmol Soc. 2004;102:57-65.

q = baseline ECD value for the "slow loss term"
[*p* + *q* = ECD at baseline (t=0)]
a = the parameter determining the rate of loss for the "fast loss term"
b = the parameter determining the rate of loss for the "slow loss term"
t = time from surgery

As discussed in the later section on sub-group analyses, the sponsor believes that eyes with baseline guttata and baseline ACDs < 3.0 mm put an eye "at-risk" for increased ECD losses. Their proposed labeling contains Contraindications for eyes with corneal guttata and for eyes with ACD < 3.0 mm. Therefore, the sponsor believes that estimating the ECD losses for the Guttata-Free, Large ACD sub-cohort is most relevant with regard to the targeted population, and for use in calculating the "grid" for a labeling Contraindication which provides a minimum preoperative ECD.

The sponsor fitted the biexponential model to the ECD data for this sub-cohort. Estimates from the model are shown in Tables 27 and 28. Table 27 displays the model-generated parameter estimates, including acute and chronic rates of loss. Table 28 displays predicted mean ECDs along with accompanying confidence intervals for various time points. Table 29 presents the model-generated predictions for the proportion of eyes that will be below 1000, 750, and 500 cells/mm^2 at various time points.

Table 27
Model-generated Parameter Estimates
ECDmonth=p×e-a×month+q×e-b×month+ε
"Guttata-Free, Large ACD" sub-cohort
Based on Data From Baseline to 48 Months
IMT-002 and IMT-002-LTM
(Amendment 13, Table 21.1)

Parameter	Estimate	Approx Std Error	95% Lower	95% Upper	t-value	Approx Pr > |t|
p	506.7	65.5	378.1	635.3	7.7	<.001
a	0.5	0.2	0.1	1.0	2.5	0.012
q	2029.7	45.0	1941.4	2118.0	45.1	<.001
b	0.003	0.001	0.001	0.005	3.5	<.001

Annual ECD % Loss (90% CI) based on the slow exponential rate: 3.8% (2.0%, 5.5%). [Loss at 12 months: ~23%]

[BASED ON 112 "GUTTATA-FREE, LARGE ACD" SUB-COHORT OF IMT-IMPLANTED];

Table 28
Predicted Mean ECD Based on Bi-exponential Model for
"Guttata-Free, Large ACD" sub-cohort
Based on Data From Baseline to 48 Months
IMT-002 and IMT-002-LTM
(Amendment 13, Table 21.2)

Time	Mean ECD	90% Confidence Intervals
3 Months	2109.2	2029.4, 2189.0
12 Months	1954.0	1911.0, 1997.1
24 Months	1879.7	1842.2, 1917.3
36 Months	1808.9	1753.7, 1864.1
48 Months	1740.8	1660.4, 1821.2
60 Months	1675.2	1569.3, 1781.1

The sponsor estimated the "proportion of implanted eyes with ECD less than a given value" from the empirical distribution of residuals and the "predicted mean ECD" (Table 23). For each data point after baseline, the difference between the observed ECD and the expected mean value from the regression model was calculated ("the residual"). Then, assuming that this distribution of residuals remained constant across time, the "predicted proportion below 1000 cells/mm^2 (or other value)" was estimated by adding these residuals to the "predicted mean ECD" and calculating the proportion of these points that were below 1000 cells/mm^2 (Table 29).

Table 29
Predicted Probability of ECD Less Than Threshold Based on
Bi-exponential Model for
"Guttata-Free, Large ACD sub-cohort"
Based on Data From Baseline to 48 Months
IMT-002 and IMT-002-LTM (Excluding Preop Residuals)
(Amendment 13, Table 21.3)

Probability of ECD			
Time	**< 1000**	**< 750**	**< 500**
3 Months	5.0	1.6	0.1
12 Months	7.1	3.2	0.9
24 Months	8.5	4.3	1.3
36 Months	8.9	6.1	1.9
48 Months	9.8	6.9	2.6
60 Months	10.5	7.7	3.5

The empirical frequency of residuals was used to estimate these probabilities.

This model (which excludes eyes with guttata and small ACDs) projects ~7% of implanted eyes to decrease to <750 cells/mm2 by 48 months postop.

As mentioned above, in the labeling the sponsor proposes a minimum ECD based on subject age at the time of implantation. This "grid" is presented in Table 24.

The sponsor developed this "grid" of minimum baseline ECD based upon post hoc analysis of the "Guttata-Free Large ACD" Sub-Cohort of IMT-Implanted eyes. The specific assumptions used in the development of a grid of baseline ECD for the cohort are as follows:

- 12-month ECD loss of 24.6%, the lower 90% confidence interval for 12-month ECD, 1911 cells/mm^2, estimated by the biexponential model, and Annual ECD loss of 5.5%, the upper 90% confidence interval for annual loss estimated by the biexponential model, utilizing 48 month data.

- Annual chronic ECD loss of 5.5% (i.e., the upper 90% confidence interval for annual loss [3.8% per year] estimated by the biexponential model, utilizing 48-month data).

- Minimum ECD values were calculated based upon subject age, projecting back from the requirement of an end-of-life ECD of 750 cells/mm^2. These calculations assume an average life span, stratified by sex. (data from Life expectancy -- National Vital Statistics Reports)

- Minimum baseline ECDs of less than 2000 for subjects <90 years of age were excluded from grid, at FDA request,

This model (which excludes eyes with guttata and small ACDs) projects ~7% of implanted eyes to drop to <750 cells/mm2 by 48 months postop.

As mentioned above, in the proposed labeling, the sponsor has put in a requirement for a minimum ECD based on subject age at the time of implantation. This "grid," is provided in Table 30.

Table 30
Proposed Grid of Preoperative ECD Required for IMT Implantation
Based on "Guttata-Free, Large ACD" Sub-Cohort of IMT-Implanted Eyes
(Amendment 13, Figure 22)

Age Range		65-69		70-74		75-79		80-84		85-89		90 or Greater	
Gender		Male	Female	Male	Female	Male	Female	Male	Female	Male	Female	Male	Female
Avg. Life Span		16.6	19.5	13.2	15.8	10.3	12.4	7.8	9.4	5.7	6.9	4.2	5.0
Minimum Cell Density		2460	2755	2000	2325	2000	2000	2000	2000	1800	1800	1800	1800
EDC at year	1	1855	2077	1508	1753	1508	1508	1508	1508	1357	1357	1357	1357
	2	1753	1963	1425	1657	1425	1425	1425	1425	1283	1283	1283	1283
	3	1657	1855	1347	1566	1347	1347	1347	1347	1212	1212	1212	1212
	4	1565	1753	1273	1480	1273	1273	1273	1273	1145	1145	1145	1145
	5	1479	1657	1203	1398	1203	1203	1203	1203	1082	1082	1082	1082
	6	1398	1566	1137	1321	1137	1137	1137	1137	1023	1023	1023	1023
	7	1321	1480	1074	1249	1074	1074	1074	1074	967	967	967	967
	8	1248	1398	1015	1180	1015	1015	1015	1015	913	913	913	913
	9	1180	1321	959	1115	959	959	959	959	863	863	863	863
	10	1115	1249	906	1054	906	906	906	906	816	816	816	816
	11	1054	1180	857	996	857	857	857	857	771	771	771	771
	12	996	1115	809	941	809	809	809	809	728	728	728	728
	13	941	1054	765	889	765	765	765	765	688	688	688	688
	14	889	996	723	840	723	723	723	723	651	651	651	651
	15	840	941	683	794	683	683	683	683	615	615	615	615
	16	794	889	646	750	646	646	646	646	581	581	581	581
	17	750	840	610	709	610	610	610	610	549	549	549	549
	18	709	794	576	670	576	576	576	576	519	519	519	519
	19	670	750	545	633	545	545	545	545				
	20	633	709	515	598	515	515	515	515				
	21	598	670		566								
	22	565	633		534								
	23	534	598		505								
	24	505	566										
	25		534										
	26		505										

Life expectancy -- National Vital Statistics Reports, Vol. 53, No. 6, November 10, 2004
Cell density at end of life
Years post implant when cell density reaches 500 cell per mm2

The FDA requested a recalculation of the biexponential model and the associated chronic rate of ECD loss based upon the "All IMT-Implanted" cohort, with no exclusion of eyes based upon "risk factors." This request was made in order to minimize possible introduction of bias. FDA also requested the creation of a corresponding possible alternative labeling grid.

In response, Vision Care provided results from biexponential modeling using all IMT-implanted eyes (Tables 31 and 32) and a corresponding grid (Table 33). Table 31 shows the model-generated parameter estimates for the all-implanted cohort. The estimated chronic rate of loss is 4.8% (upper confidence limit of 6.2 %) compared to the rate of 3.8 % for the guttata-free, large ACD cohort. For the "All IMT-implanted" cohort, Table 32 shows the predicted proportion of eyes below 1000 cells/mm^2 (or other values) at various time points.

Table 31
Model-generated Parameter Estimates
ECDmonth=p×e-a×month+q×e-b×month+ε
All IMT-Implanted Eyes
Based on Data from Baseline to 48 Months
IMT-002 and IMT-002-LTM
(BASED UPON 206 EYES IMPLANTED; FROM TABLE 22.1 IN A013)

Parameter	Estimate	Approx Std Error	95% Lower	95% Upper	t-value	Approx Pr > |t|
p	530.0	51.4	429.1	630.9	10.3	<.001
a	0.6	0.2	0.2	1.1	3.0	0.003
q	1967.1	34.2	1900.0	2034.3	57.5	<.001
b	0.004	0.001	0.003	0.006	5.6	<.001

Annual ECD % Loss (90% CI) based on the slow exponential rate: 4.8% (3.4%, 6.2%).. [Loss at 12 months: ~25%]

Table 32
Predicted Probability of ECD Less Than Threshold
Based on Bi-exponential Model for All IMT-Implanted Eyes
Based on Data from Baseline to 48 Months
IMT-002 and IMT-002-LTM
(Excluding Preop Residuals)
(Amendment 13, Table 22.3)

Probability of ECD			
Time	**< 1000**	**< 750**	**< 500**
3 Months	7.2	2.8	0.3
12 Months	9.4	5.0	1.4
24 Months	11.4	6.7	2.6
36 Months	13.1	8.2	3.9
48 Months	15.4	9.6	5.1
60 Months	17.4	11.4	6.7

The empirical frequency of residuals was used to estimate these probabilities.

[based upon 206 eyes implanted]

The main difference in "Predicted Probability of ECD Less Than Threshold" (Table 32) from the analysis based upon Guttata-Free, Large ACD eyes (Table 29) lies in the significantly higher proportions that are projected to have low cell counts (e.g., at month 48). For All IMT-Implanted eyes, the 48 month proportions predicted to be below 1000, 750, and 500, are 15.4%, 9.6%, and 5.1%, respectively. For the more restricted cohort (108 eyes implanted that were guttata-free, ACD≥ 3.0 mm), the corresponding projections below 1000, 750 and 500 are 9.8%, 6.9%, and 2.6%, respectively. It should be noted that 4% of eyes available at 36 months (3/70) and 8%

of eyes available at 48 months (7/88) had ECDs <750 cells/mm^2. Nine eyes had ECDs <750 cells/mm^2 at 48 months (or at 36 months if the eye was not available for the 48 month visit) (from Table 7 in Amendment 16).

The following grid of minimum baseline ECD (Table 33) was developed based upon analysis of the "All IMT-Implanted" cohort. The specific assumptions used are as follows:

- 12-month ECD loss of 26.3% (i.e., the percent change from the baseline ECD to the lower 90% confidence interval for 12-month ECD, based on biexponential model).
- Annual ECD loss of 6.2% (i.e., the upper 90% confidence interval for annual loss estimated by the biexponential model, utilizing 48-month data).
- Other considerations were the same as discussed with regard to their previously calculated grid.

Table 33
Grid of Preoperative ECD Required for IMT Implantation
Based on All IMT-Implanted Eyes
(Amendment 13, Figure 23)

Age Range		65-69		70-74		75-79		80-84		85-89		90 -	
Gender		Male	Female	Male	Female	Male	Female	Male	Female	Male	Female	Male	Female
Avg. Life Span		16.6	19.5	13.2	15.8	10.3	12.4	7.8	9.4	5.7	6.9	4.2	5.0
Minimum Cell Density		2834	3223	2195	2659	2000	2058	2000	2000	1800	1800	1800	1800
ECD at year	1	2088	2374	1617	1959	1473	1516	1473	1473	1326	1326	1326	1326
	2	1958	2227	1517	1837	1382	1422	1382	1382	1244	1244	1244	1244
	3	1837	2089	1423	1723	1296	1334	1296	1296	1167	1167	1167	1167
	4	1723	1959	1334	1617	1216	1251	1216	1216	1094	1094	1094	1094
	5	1616	1838	1252	1516	1141	1174	1141	1141	1026	1026	1026	1026
	6	1516	1724	1174	1422	1070	1101	1070	1070	963	963	963	963
	7	1422	1617	1101	1334	1004	1033	1004	1004	903	903	903	903
	8	1334	1517	1033	1251	941	969	941	941	847	847	847	847
	9	1251	1423	969	1174	883	909	883	883	795	795	795	795
	10	1174	1335	909	1101	828	852	828	828	745	745	745	745
	11	1101	1252	853	1033	777	799	777	777	699	699	699	699
	12	1033	1174	800	969	729	750	729	729	656	656	656	656
	13	969	1101	750	909	683	703	683	683	615	615	615	615
	14	908	1033	704	852	641	660	641	641	577	577	577	577
	15	852	969	660	800	601	619	601	601	541	541	541	541
	16	799	909	619	750	564	580	564	564	508	508	508	508
	17	750	853	581	703	529	544	529	529				
	18	703	800	545	660		511						
	19	660	750	511	619								
	20	619	704		581								
	21	580	660		545								
	22	544	619		511								
	23	511	581										
	24		545										
	25		511										

Life expectancy -- National Vital Statistics Reports, Vol. 53, No. 6, November 10, 2004
Cell density at end of life using average life span
Years post implant when cell density reaches 500 cell per mm2

In choosing the value of 750 cells/mm^2 as a requirement for the end-of-life ECD in "grid" calculations, the sponsor points out that IMT subjects are not likely to require another intraocular surgery.

It should be noted that while the proposed ECD "grid" provides some degree of protection, it does not guarantee that an individual subject's ECD counts will stay above dangerously low cell densities, if ECD loss occurs at the projected rate. This is due to the following:

(1) The grid is based upon estimates of average rates of cell loss, while many eyes lose cells at greater than average rate. (The distribution of losses is skewed toward greater loss.)

(2) If an eye is seen to be dropping to a dangerously low level of ECD, the surgical trauma of removal would likely need to be taken into account in making the decision to explant the device.

The following graph (Figure 7) shows 24 month ECDs (y-axis) as a function of baseline ECDs (x-axis) for all IMT-implanted eyes available at 24 months. This indicates the significant inter-subject variability and low predictability of final ECD from initial ECD.

Figure 7
24 MONTH ECD AS A FUNCTION OF PREOPERATIVE ECD
(graph generated by FDA from sponsor database)

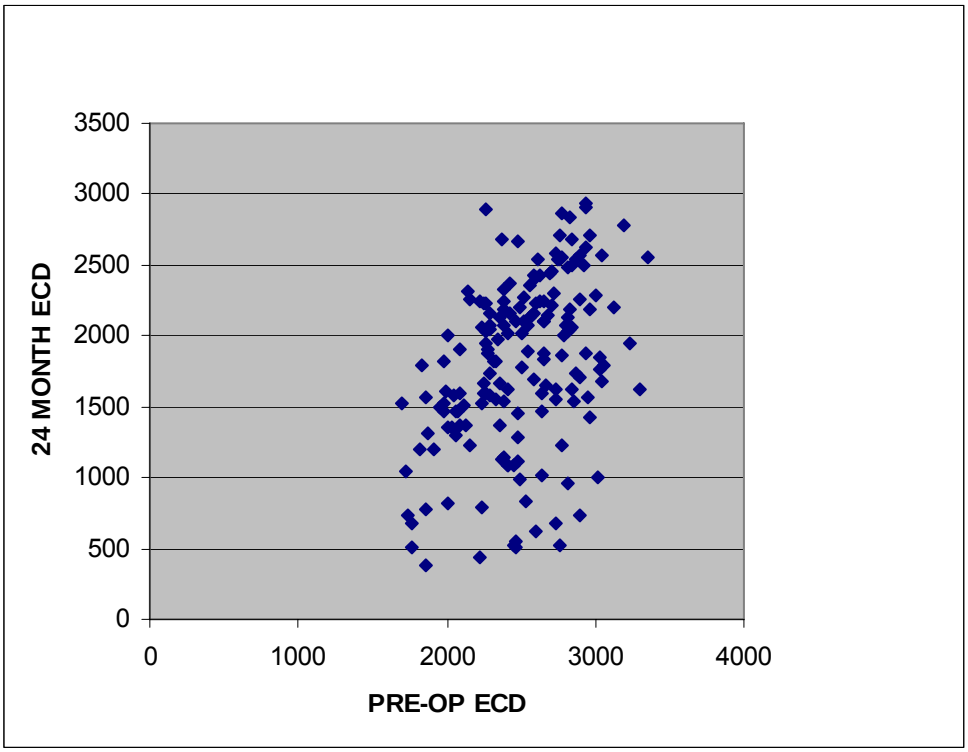

Intercept for "best fit" line: 64.2;
Slope for "best fit" line: 0.70
Regression R^2 = 0.18

5.5.5.8.4 Morphometric Analysis of Specular Microscopy Images and Endothelial Stabilization

Panel members at the 2006 panel meeting raised questions about the stabilization of the corneal endothelium. (ECD data was only available through 24 months postoperatively at that time.) In order to help establish the postoperative time when the endothelium stabilized, the sponsor was asked to provide morphometric data analysis (endothelial cell percent hexagonality and coefficient of variation) from the specular microscopy. These specific analyses were provided by the sponsor in Amendment 7.

The following tables (34 - 35) summarize the percent hexagonality and coefficient of variation in a consistent cohort over the first 24 months. Mean values for these morphometric measures do not seem to show much change associated with IMT implantation.

Table 34
Percent Hexagonality (Mean, SD)
24-Month Consistent Cohort of IMT-Implanted Eyes
(Amendment 7, Table 10)

% Hexagonality	Preop	3 Months	6 Months	9 Months	12 Months	18 Months	24 Months
N	154	154	154	154	154	154	154
Mean (SD)	59.67 (6.04)	56.57 (5.79)	56.61 (5.72)	57.60 (5.93)	58.52 (5.83)	57.48 (7.18)	57.10 (6.82)
95% CI	58.71, 60.63	55.65, 57.49	55.70, 57.52	56.66, 58.55	57.59, 59.44	56.33, 58.62	56.02, 58.19
Median	60.33	56.83	57.00	57.67	59.00	58.00	57.33
	n (%)	**n (%)**	**n (%)**	**n (%)**	**n (%)**	**n (%)**	**n (%)**
≥ 45	151 (98.1%)	147 (95.5%)	150 (97.4%)	153 (99.4%)	151 (98.1%)	149 (96.8%)	147 (95.5%)
< 45 (Stress)	3 (1.9%)	7 (4.5%)	4 (2.6%)	1 (0.6%)	3 (1.9%)	5 (3.2%)	7 (4.5%)

N = number of eyes returned for the visit with non-missing data.
% = n ÷ N × 100%
24-month consistent cohort = eyes with non-missing values at preop, 1, 3, 6, 9, 12, 18, and 24 months.

Table 35
CV (Mean, SD)
24-Month Consistent Cohort of IMT-Implanted Eyes
(Amendment 7, Table 14)

CV	Preop	3 Months	6 Months	9 Months	12 Months	18 Months	24 Months
N	153	153	153	153	153	153	153
Mean (SD)	34.23 (4.79)	33.21 (4.36)	33.66 (3.99)	33.26 (4.92)	33.19 (5.17)	33.38 (4.69)	33.50 (5.56)
95% CI	33.46, 34.99	32.51, 33.91	33.02, 34.30	32.48, 34.05	32.36, 34.01	32.63, 34.13	32.62, 34.39
Median	33.33	33.00	33.67	33.33	32.67	33.00	33.33
	n (%)	**n (%)**	**n (%)**	**n (%)**	**n (%)**	**n (%)**	**n (%)**
≤ 45	147 (96.1%)	150 (98.0%)	151 (98.7%)	150 (98.0%)	149 (97.4%)	151 (98.7%)	150 (98.0%)
> 45 (Stress)	6 (3.9%)	3 (2.0%)	2 (1.3%)	3 (2.0%)	4 (2.6%)	2 (1.3%)	3 (2.0%)

N = number of eyes returned for the visit with non-missing data.
% = n ÷ N × 100%
24-month consistent cohort = eyes with non-missing values at preop, 1, 3, 6, 9, 12, 18, and 24 months.

Additionally, the sponsor provided morphometric results stratified by final ECD levels in Amendment 10. In Amendment 10, the sponsor presents a summary of their

analyses of the morphometric data. The sponsor states the following, concerning Hexagonality [in the labeling proposed in A010; statements not present in revised labeling]:

> *"…This pattern of change [of percent hexagonality], with only a small initial decrease of 3%, seen at 3 months, suggests stabilization of the endothelial cell monolayer, since no further changes, other than a slight increase beginning between 3 and 6 months, were observed over the course of 24 months of follow-up.*
>
> *This suggested stabilization of the corneal endothelium is further reflected in the proportion of eyes with percent hexagonality <45%, a suggested value under which the endothelium may be considered "stressed" as evidenced by fewer cells in the stable hexagonal configuration.*
>
> *Nevertheless, a substantial reduction in % Hexagonality without full recovery to baseline levels was found among eyes with significant ECD loss to the <750 cell/mm^2. These eyes all had or experienced risk factors identified as contributing to ECD loss, such as shallow baseline anterior chamber depth (<3.0 mm), guttata, surgical training, or were among the first eyes treated by non-corneal surgeons, or some combination of these factors."*

The sponsor states the following, concerning Coefficient of Variation [in the labeling proposed in A010; statements not present in revised labeling]:

> *"… mean coefficient of variation (CV) for the study population was stable over the course of the study, with only a very small decrease in CV at 3 months, from approximately 34 to 33, which suggests stabilization of the endothelial cell monolayer, since no changes, other than a slight decrease at 3 months, were observed over the course of 24 months of follow-up.*
>
> *However, CV has not been shown to be as sensitive an indicator of endothelial cell stress as % Hexagonality, as evidence by eyes with low final ECD (<750 cells/mm^2) showing little change in their CV level."*

The sponsor has stated that endothelial cell loss with satisfactory percent hexagonality and coefficient of variation appears to be indicative of remodeling of the overall distribution of endothelial cells. They suggest that these morphometric results imply that the endothelium is stable. They also suggest that the corneal endothelium is under "stress" only if CV is greater than 0.45 or %Hexagonality is less than to 45%.

The published literature cited by the sponsor suggests that low CV and high %Hex are related to endothelial cell stability. However, it is unclear that the "safe" values of CV or %Hex suggested are predictive of normal rates of endothelial cell loss or freedom from decompensation. In particular, FDA is not aware of any prospective

studies demonstrating that CV< 0.45 or %Hex >45% assure endothelial cell stability or safety.

The sponsor *"concluded [that] % Hex and CV return to normal levels from three months on and are indicative of corneal stability or a stabile endothelial cell monolayer."* The validity of this conclusion is questioned by FDA because of the following considerations:

i. The trial collected only central endothelial cell data. No data is available for the periphery. Therefore, it is unknown whether CV and %Hex are normal or abnormal in the periphery.
ii. Several new incidents of corneal edema continued to occur well after the initial surgery. There were 12 IMT-implanted eyes which had corneal decompensation or late (≥ 2 months postop) corneal edema. (See the 5.5.5.4 of this Summary.) At the time of the 2006 panel meeting, there had been two cases of corneal transplantation. To date, there are a total of four cases. Overall, inspection of the endothelial parameters in individual eyes (with corneal edema) seemed to show a very limited relationship between continuing decline in ECD and the morphometric data.
iii. For this study, the morphometric data seem to have little predictive value in terms of subsequent ECD changes. Despite the sponsor's suggestion of stability of the endothelium before 24 months, the mean ECD continued to drop significantly between 24 and 48 months postoperatively. For the eyes with ECD data at both 24 and 48 months (n=86), the mean ECD declined by 8 % and the mean within-eye percent loss was ~6%.

When the sponsor accrued significant data at 48 months postoperatively, they were asked to assess the correlations between the morphometric data at 24 months and the subsequent decline in ECD. The following graphs (%hexagonality – Figure 8; the CV- Figure 9) show, for all implanted eyes with both 24 and 48 month data, scatterplots of the percent ECD change between these two time points as a function of the morphometric data at 24 months.

Figure 8

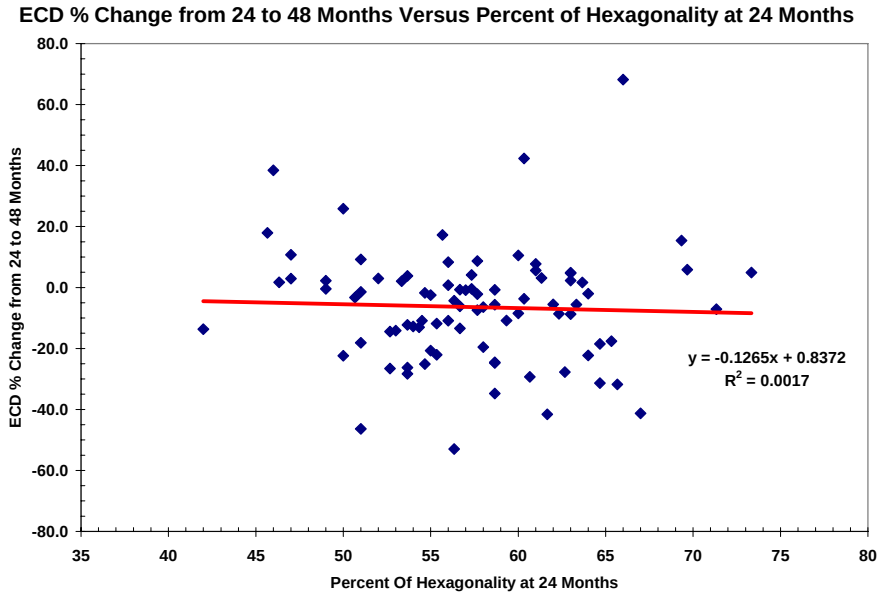

Figure 9

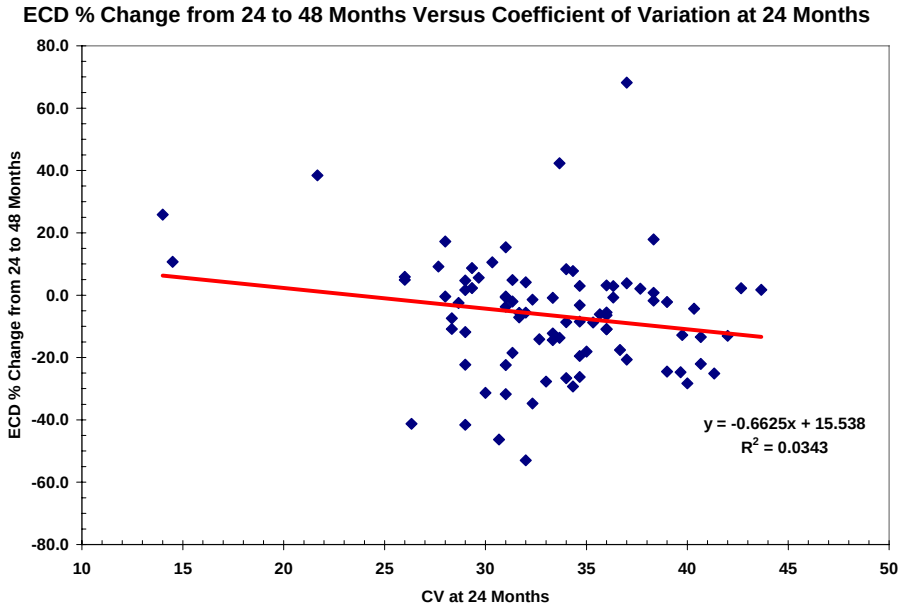

In a statement accompanying these analyses, the sponsor wrote:

> *"… the analyses … do not reveal a relationship between 24-month % Hex and change in ECD over the period 24 to 48 months or between 24-month CV and change in ECD over the period from 24 to 48 months."*

5.5.5.8.5. Risk of Low ECD and Sub-group Analysis

At the time of the initial PMA submission, there were two cases of corneal decompensation. The risk of decompensation is clearly related to the risk of developing a very low ECD. In order to investigate factors which may have contributed to this risk, the sponsor analyzed cell loss in relation to various sub-group characteristics. As this development was unanticipated, none of these hypotheses were pre-determined in the protocol. The sponsor did multiple post-hoc statistical tests of cofactors (e.g., anterior chamber depth, surgeon specialty, surgical order).

The 2006 Panel requested additional analyses concerning the effects of various specific cofactors (glaucoma, chronic inflammation, and diabetes) upon ECD loss. In Amendment 7, the sponsor reported that they did various additional statistical tests concerning the statistical significance of these cofactors. The sponsor also believed that the presence of baseline guttata was a contributing factor, and they provided additional analyses regarding the effect of this cofactor on ECD loss.

As a result of these analyses, the sponsor states that they have identified the following "risk factors" for endothelial cell loss:

- the presence of baseline corneal guttata,
- baseline Anterior Chamber Depth < 3.0 mm,
- implantation by a non-cornea-trained surgeon ("surgeon training"), and
- being among the first five eyes implanted by a given surgeon ("surgical order")

Multiple analyses were performed. Of note, some analyses were based upon comparisons of ECD values at various time points, some upon percent loss of ECD from baseline, some upon comparison of the percentage of eyes with <1000 or <750 cells/mm^2, etc. It should also be noted that ~90 % of eyes in the study had one or more "risk factors" as shown in Table 36. Thus, there is data from only 17 implanted eyes with "no risk factors."

Table 36
Numbers of Eyes with Various "Risk Factors"

Factor	All Implanted Eyes	%	Eyes in LTM	%	Eyes NOT in LTM	%
with guttata	26	12.6%	16	13.0%	10	12.0%
ACD <3mm	84	40.8%	52	42.3%	32	38.6%
not cornea specialist	148	71.8%	91	74.0%	57	68.7%
surgical order <6	121	58.7%	66	53.7%	55	66.3%
0 risk factors	**17**	**8.3%**	**13**	**10.6%**	**4**	**4.8%**
1 risk factor	56	27.2%	30	24.4%	26	31.3%
2 risk factors	85	41.3%	50	40.7%	35	42.2%
3 risk factors	39	18.9%	25	20.3%	14	16.9%
4 risk factors	9	4.4%	5	4.1%	4	4.8%

These types of post hoc or unplanned statistical analyses of risk factors have inherent limitations. Interpretation of any statements of p-values (statistical significance) from these analyses is problematic because of selection bias and the underestimation of p-values related to lack of compensation for testing multiple hypotheses. However, there are some data based on descriptive statistics that suggest that excluding subjects with these factors may help limit the risk of endothelial cell loss.

Determining the risk of dropping to a dangerously low ECD is complicated by the fact that the ECD data in this population and this study were highly variable. Approximately 15% of the implanted eyes dropped below an ECD of 1000 some time in the study, but in many cases the number again rose above 1000. A measurement at any single time point is suspect because of the large variability of the data. The following Tables 37 - 38 are based upon mean "within-eye" ECDs from months 6 through 24. FDA reviewers believe that these analyses are helpful because they reduce the variability of the ECD measurements related to measurement imprecision. [This time span was selected because of the following considerations: By 6 months, most of the effect of surgical trauma is over and 24 months is the last time point with reasonably complete data available. Decline in ECD should be relatively limited for this limited time span.]

Table 37
"Within-Eye" Mean ECD from 6 to 24 Months:
Proportion of Eyes with "within-eye mean ECD" < 1000 cells/mm^2
All IMT-Implanted Cohort and Various Sub-Cohorts
(Amendment 012, Table 11, p. 13)

Subset	Total Number of Eyes	Within-Eye Mean ECD cells/mm^2	Number of Eyes with Within-Eye Mean ECD < 1000 cells/mm^2	Percent of Eyes with Within-Eye Mean ECD < 1000 cells/mm^2	95% CI[1] for Percent of Eyes with Within-Eye Mean ECD < 1000 cells/mm^2
• All IMT-Implanted Eyes	201	1868.5 (577.3)	22	10.9%	(7.0%, 16.1%)
• Guttata-Free Eyes	175	1899.1 (568.0)	18	10.3%	(6.2%, 15.8%)
• Guttata-Free Eyes with Surgical Order >5	72	1952.7 (537.4)	5	6.9%	(2.3%, 15.5%)
• Guttata-Free, Large ACD Sub-Cohort *	**108**	**1958.3 (513.2)**	**7**	**6.5%**	**(2.6%, 12.9%)**
• Guttata-Free Eyes Implanted by Cornea Trained Surgeons	53	1988.7 (522.5)	3	5.7%	(1.2%, 15.7%)
• Guttata-Free Eyes • ACD ≥3 • Implanted by Cornea Trained Surgeons	36	2039.8 (480.6)	1	2.8%	(0.1%, 14.5%)

*sponsor's proposed "grid" based upon the "Guttata-Free, Large ACD" Sub-Cohort

[Amendment 019, TABLE 2.B.1.1]

o SUB-COHORT A** [IMT-IMPLANTED EYES OF SUBJECTS ≥ 65 YEARS, WITH NO GUTTATA, ACD ≥ 3.0 MM AND IMPLANTED BY A CORNEA SPECIALIST]	33	2017.0 (492.0)	1	3.0%	(0.1%, 15.8%)
o SUB-COHORT B [IMT-IMPLANTED EYES EXCLUDED FROM COHORT A]	168	1839.4 (589.5)	21	12.5%	(7.9%, 18.5%)

[1]Exact confidence interval per Clopper-Pearson method

** Subjects who met the main criteria for the sponsor's proposed Indications, Contraindications, and Warnings.

Table 38
"Within-Eye" Mean ECD from 6 to 24 Months:
Proportion of Eyes with "within-eye mean ECD" < 750 cells/mm^2
All IMT-Implanted Cohort and Various Sub-Cohorts
(Amendment 012, Table 12, p. 14)

Subset	Total Number of Eyes	Mean (SD) of Within-Eye Mean ECD cells/mm^2	Number of Eyes with Within-Eye Mean ECD < < 750 cells/mm^2	% of Eyes with Within-Eye Mean ECD < 750 cells/mm^2	95% CI[1] for % of Eyes with Within-Eye Mean ECD < 750 cells/mm^2
• All IMT-Implanted Eyes	201	1868.5 (577.3)	10	5.0%	(2.4%, 9.0%)
• Guttata-Free Eyes	175	1899.1 (568.0)	9	5.1%	(2.4%, 9.5%)
• Guttata-Free Eyes with Surgical Order >5	72	1952.7 (537.4)	3	4.2%	(0.9%, 11.7%)
• Guttata-Free, Large ACD Sub-Cohort *	**108**	**1958.3 (513.2)**	**4**	**3.7%**	**(1.0%, 9.2%)**
• Guttata-Free Eyes Implanted by Cornea Trained Surgeons	53	1988.7 (522.5)	2	3.8%	(0.5%, 13.0%)
• Guttata-Free Eyes • ACD ≥3 • Implanted by Cornea Trained Surgeons	36	2039.8 (480.6)	1	2.8%	(0.1%, 14.5%)

* sponsor's proposed "grid" based upon the "Guttata-Free, Large ACD" Sub-Cohort

[Amendment 19, TABLE 2.B.1.2]

o SUB-COHORT A [IMT-IMPLANTED EYES OF SUBJECTS ≥ 65 YEARS, WITH NO GUTTATA, ACD ≥ 3.0 MM AND IMPLANTED BY A CORNEA SPECIALIST]**	**33**	**2017.0 (492.0)**	**1**	**3.0%**	**(0.1%, 15.8%)**
o SUB-COHORT B [IMT-IMPLANTED EYES EXCLUDED FROM COHORT A]	168	1839.4 (589.5)	9	5.4%	(2.5%, 9.9%)

[1]Exact confidence interval per Clopper-Pearson method
** Subjects who met the main criteria for the sponsor's proposed Indications, Contraindications, and Warnings.

These tables provide a reasonably good estimate of the device risk seen during the original clinical study. They are not dependent upon the statistical model chosen and are not dependent upon projections of future ECD loss. (The projections from statistical modeling are dependent upon the model assumptions, which cannot be fully verified.) The sponsor provided reasonably full data only through 2 years postoperatively. [However, note that these analyses have their limitations – each eye has a different number of available measurements and there is no "weighting" for number of available measurements.]

The proportion of eyes that falls below an ECD of 1000 cells/mm^2 within the first 2 years is on the order of 3 – 11% for most of these groups. The fact that the sub-groups in Tables 31 - 32 were selected after inspection of the study data may tend to bias these estimates downward, but even if it is assumed that the entire study had consisted of only one of the sub-cohorts, the upper confidence limit for this "proportion below 1000 cells/mm^2" is not generally below about 13 - 16%. Similarly, the upper confidence limit for the "proportion below 750 cells/mm^2" for each of the groups considered is not below about 9%.

A summary of ECD data for the sub-cohort of implanted eyes that met the main criteria for the sponsor's proposed Indications, Contraindications, and Warnings is provided below:

Key Findings for "Sub-Cohort A" (IMT-implanted eyes of subjects ≥ 65 years of age, with no guttata, ACD ≥ 3.0 mm and implanted by a cornea specialist) [See Amendment 19]:

- Number Implanted: 33 subjects implanted (27 available at 24 months)
- Number in continuation study: 17 subjects enrolled into IMT-002-LTM (12 available at 48 months)
- Number of sites: 10 cornea specialists/10 sites
    - 2 sites implanted > 5 eyes
    - 11/33 implanted eyes came from a single site (Emory)
    - 9/17 in LTM study were from Emory
- Discontinuations due to IMT explants: 2 (1 in IMT-002, 1 in IMT-002-LTM)
- Biexponential modeling results:
    - Loss at 12 months postop: ~19%
    - Chronic rate of loss: 3.4%/yr (upper confidence limit 6.4%/yr)
    - 48 month projected percent of eyes below ECD level
        - Below 1000 cells/mm^2: 5.7%
        - Below 750 cells/mm^2: 3.8%
- Percent of eyes <750 ("within-eye mean" for 6 – 24 months): 3%
    - 95% confidence interval: (0.1% - 15.8%)
- Late Corneal Edema Cases:
    - IMT-002: 0 cases (0%)
    - IMT-002-LTM: 2 cases (11.8%)

- Corneal Decompensation
    - IMT-002: 0 cases (0%)
    - IMT-002-LTM: 1 case (5.9%)

Statistical Considerations in Subgroup Analysis

Additional statistical subgroup analyses were conducted on the data submitted in the sponsor's original PMA. Subjects selected for implantation were required to meet the inclusion/exclusion criteria listed earlier in this Summary. The analyses of surgical order, surgical specialty, and corneal edema on day 1 postop, anterior chamber depth, age, and gender began after the first two cases of corneal decompensation occurred. These subgroup analyses were performed in an effort to identify the presence of any correlative factors related to ECD loss. Most additional subgroup exploratory analyses were conducted at the request of the panel and FDA after the July 14, 2006 panel meeting.

Based upon those analyses, the sponsor proposed a new recommended patient population for a subgroup of the originally studied population. This recommended population, as spelled out in the new Indication with accompanying Contraindications and Warnings, is a sub-population of patients who are 65 years of age or older (narrowed from 55), with anterior chamber depth (ACD) 3.00 mm or greater, free of corneal guttata, with an implanting surgeon who is a cornea-trained specialist. By considering potential factors that might have contributed to higher risk for ECD loss, and identifying these factors so that the risk of ECD loss could be reduced, labeling has been proposed by the sponsor to reflect these findings.

In making decisions about the safety and effectiveness of the device for this new recommended patient population, it is important to consider the limitations of relying on non-prespecified subgroup analyses. Statistically speaking, for any non-prespecified analysis it is difficult to control the Type I error (α). It is especially of concern for this PMA, because several subgroups have been tried. The p-values calculated from these analyses are potentially misleading. For example, if a sponsor picked 20 subgroups and did 20 analyses (tests), the chance to find at least one p-value <0.05 is 64% even if the treatment has no effect at all. By subdividing the data in ways not initially planned for, the potential for a false "statistically significant" result increases dramatically. Unplanned statistical hypothesis tests, such as subgroup analyses generated after the primary analysis, suggested by the data trends, must be interpreted with caution. One should bear in mind the conditions under which the clinical trial was designed and analyzed and the limitations associated with such analyses.

Another concern is the sample size of the proposed subgroup. Although 206 eyes were implanted with the IMT, only 33 eyes belong to the proposed subgroup. There are serious concerns about how representative these 33 eyes are of the larger population, and how repeatable the findings from this small group are.

5.5.5.8.6 ECD Summary

The following summarize some key specular microscopy results:

- 12 Month Mean Percent ECD Loss at 12 months ("within-eye" mean loss): ~25%
- Chronic ECD Loss rate (Sponsor's Biexponential Model)
    - "All IMT-Implanted" Cohort: 4.8%/yr (upper 90% confidence limit: 6.2%/yr);
        - "Guttata-Free, Large ACD" Sub-Cohort: 3.8%/yr (upper confidence limit: 5.5%)
        - "Sub-Cohort A": 3.4%/yr (upper confidence limit: 6.4%/yr)
- Observed Annualized Chronic ECD loss (IMT-Implanted eyes)
    - loss between 6 and 48 months (85 eyes): 3%/yr
    - loss between 12 and 48 months (88 eyes): 2%/yr
    - loss between 24 and 48 months (86 eyes): 3%/yr
- Morphometric Analyses (IMT-Implanted Eyes)
    - Means for Percent Hexagonality and Coefficient of Variation show only small changes.
    - Only a very weak relationship between morphometric parameters (%Hex and CV) at 24 months and change in ECD from 24 to 48 months.
- Percent of Eyes with ECD < 750 cells/mm^2 ["Within-Eye Mean" (6 – 24 months)]:
    - "All IMT-Implanted" Cohort: 5.0% (upper 95% confidence limit: 9.0%)
        - "Guttata-Free, Large ACD" Sub-Cohort: 3.7% (upper confidence limit: 9.2%)
        - "Sub-Cohort A": 3.0%/yr (upper confidence limit: 15.8%)
- Number of Cases of Corneal Decompensation + Unresolved Late Corneal Edema
    - "All IMT-Implanted" Cohort: ~10 (~5% of 206)
        - 4 cases were decompensations;
        - 5 to 6 (depending on counting of "resolution) were unresolved late edema.
    - "Sub-Cohort A": 1 case of decompensation+ 2 cases of late edema

The Panel members will be asked for their input concerning:

- Whether specular microscopy data provide sufficient evidence of endothelial stability.
- The appropriate assumptions that should be used for the "grid" calculations.
- The safety of the device for the newly proposed population limited by the proposed labeling Indications, Contraindications, and Warnings,

5.5.6 Postoperative Vision Rehabilitation

The sponsor's goals for the rehabilitation program were to facilitate adjustment to the IMT expeditiously while optimizing function. Traditionally, the professionals direct the rehabilitation. In the IMT trial, the professional provided in-office instruction and guidance on the rehabilitation program and assessed progress in follow-up visits. The subject was responsible for implementing the rehabilitation program at home with the assistance of family. The family verified that training was performed and that the home environment (lighting and contrast) was modified to optimize rehabilitation. No validated methods of measuring the outcome of training were utilized in this trial to verify subjects' improvement in their ability to function at home, work, and elsewhere. FDA believes that an effective postoperative rehabilitation program should be focused upon the patient's targeted goals related to visual function.

The sponsor's training program did not include the use of any of the following professionals to conduct baseline functional abilities: rehabilitation teachers; occupational therapists; rehabilitation counselors; social workers and orientation and mobility specialists. FDA informed the sponsor that state associations and other agencies for the blind and visually impaired are located in almost every state and are resources for providing rehabilitation services. The sponsor believes that there is limited availability of rehabilitation professionals and that physicians may not be able to comply should labeling require Vision Rehabilitation by professionals. The sponsor, however, does agree that the benefits of the IMT may be maximized by training and has proposed the following labeling: "Low vision rehabilitation services are recommended to maximize the potential for successful use of the IMT."

FDA had questions about patient adaptation to the increased magnification and the potential associated proprioceptive changes. These effects are known to alter judgment of localization of objects in the visual space, the ability to walk, negotiate curbs and steps, and to read. Therefore, FDA recommended that the labeling should specify that professional vision rehabilitation services should include orientation and mobility as well as reading training.

5.5.6.1 <u>Rehabilitation Training Program</u>

There was a concern expressed at the last panel meeting regarding the adequacy of the rehabilitation program.

In response to this concern, the sponsor developed an extensive visual rehabilitation training program in consultation with professional vision rehabilitation specialists for use in patients with the IMT. A copy is provided in A7 (Attachment 6). This training is both preoperative and postoperative. The preoperative training program is similar to a continued screening process that provides additional education and awareness so the subject and physician can decide if the IMT is an appropriate treatment option for

that subject's expectations, motivation, and functional goals. Subjects are made aware of their scotoma in functional task situations and shown the effect that magnification similar to the IMT power has on their central vision during functional task situations. An eye patch is placed over the eye to be implanted to assess whether the subject can navigate with only the peripheral vision from one eye (the fellow eye). Two (2) different practitioners will be using the external telescope system (ETS) in 2 or more sessions with the subject preoperatively. The practitioners are directed to address and train on these points so that the subject fully understands the intervention and can discuss whether the potential benefits outweigh the risks with their ophthalmologist. This program includes a recommendation for inclusion of Orientation & Mobility specialists as well as reading specialists in vision rehabilitation of IMT implanted subjects.

As noted previously, the sponsor has proposed a modification to the indications statement that states subjects are "willing to participate in a postoperative visual training / rehabilitation program."

5.5.7 Missing subject data

There was a concern expressed at the last panel meeting regarding receiving complete information on the 11 subjects that were not considered successfully implanted, the 8 subjects that had the device removed, and the 13 subjects that missed the final visit.

In response to this concern, the sponsor provided the complete data on the 11 eyes that did not receive the IMT due to either intraoperative complications or implantation but removal during the operative procedure. This is provided in Table 39 below. Please note that all eyes with late corneal edema were included in all analyses of data generated in the IMT-002 clinical trial presented in P050034 – none of these eyes have been excluded from any analysis presented in this PMA.

The cohort of 11 eyes not successfully implanted with the IMT consisted of 7 cases of posterior capsular rupture, 2 eyes with choroidal detachment, one eye with choroidal hemorrhage, and an eye with loss of zonular support. With regard to the two cases identified on the study case report forms as choroidal detachment, the medical monitor for posterior segment issues during the study, spoke to both of the surgeons who reported choroidal detachment, and while the event was specifically documented as choroidal detachment, in both eyes there was positive posterior pressure and chamber shallowing, but no sign of choroidal detachment was verified either intra- or postoperatively. One case of choroidal hemorrhage occurred in association with a particularly long surgery.

Although these eyes did not undergo implantation, for eyes with follow-up available, at 1 month postoperative, there was no visual loss from baseline. One eye (ID 008-211) had an improvement in BCDVA at 1 month, but vision returned to the baseline level at 3 months, and then decreased slightly between 3 and 6 months. Otherwise, postoperative BCDVA was generally stable from baseline through the last available

visit. This finding is confirmed in the analysis of cumulative change in BCDVA in Table 40, which shows that the mean change in visual acuity from baseline was less than 1 line for this cohort of eyes.

Table 39
BCDVA BY VISIT
11 NON-IMPLANTED EYES
(Amendment 010, Table 40, p. 73)

Patient ID*	Preop	1 Month	3 Months	6 Months	9 Months	12 Months	18 Months	24 Months
	20/138							
	20/348	20/174	20/320	20/438				
	20/400	20/400	20/381			20/400		
	20/182	20/138	20/125	20/115				
	20/182	20/166						
	20/381							
	20/264	20/289						
	20/438	20/438						
	20/500	20/458						
	20/551	20/526	20/526			20/418		
	20/400	20/320	20/289					

*Patient identifiers removed.

Table 40
CUMULATIVE BCDVA CHANGE FROM BASELINE
11 NON-IMPLANTED EYES
(INCLUDING BCDVA AFTER IMT REMOVAL & IOL IMPLANT)
(Amendment 010, Table 41, p. 73)

	1 Month	3 Months	6 Months	9 Months	12 Months	18 Months	Last Available
	n (%)	n (%)	n (%)	n (%)	n (%)	n (%)	n (%)
N	9	5	2	0	2	0	9
Gain ≥ 6 lines	0 (0.0%)	0 (0.0%)	0 (0.0%)		0 (0.0%)		0 (0.0%)
Gain ≥ 5 lines	0 (0.0%)	0 (0.0%)	0 (0.0%)		0 (0.0%)		0 (0.0%)
Gain ≥ 4 lines	0 (0.0%)	0 (0.0%)	0 (0.0%)		0 (0.0%)		0 (0.0%)
Gain ≥ 3 lines	1 (11.1%)	0 (0.0%)	0 (0.0%)		0 (0.0%)		0 (0.0%)
Gain ≥ 2 lines	1 (11.1%)	0 (0.0%)	1 (50.0%)		0 (0.0%)		1 (11.1%)
Gain ≥ 1 lines	3 (33.3%)	2 (40.0%)	1 (50.0%)		1 (50.0%)		3 (33.3%)
No change	6 (66.7%)	3 (60.0%)	1 (50.0%)		1 (50.0%)		6 (66.7%)
Loss of >2 lines	0 (0.0%)	0 (0.0%)	0 (0.0%)		0 (0.0%)		0 (0.0%)
Mean Line Change (SD)	0.64 lines (1.01 lines)	0.76 lines (0.68 lines)	0.50 lines (2.12 lines)		0.60 lines (0.85 lines)		0.44 lines (0.94 lines)

Table 41 provides the available endothelial cell density (ECD) for the eyes that were not implanted with an IMT due to intraoperative complications. In general, ECD was stable in this cohort of eyes, however, one eye, which did not undergo IMT implantation due to posterior capsular rupture showed a loss of > 1,000 cells/mm^2 from baseline at 6 months. In this case, vitreous loss occurred subsequent to rupture of the posterior capsule, requiring a vitrectomy. This unexpected additional surgical trauma likely contributed to the greater endothelial cell loss observed in this eye.

Table 41
ENDOTHELIAL CELL DENSITY
11 NON-IMPLANTED EYES
(Amendment 010, Table 42, p. 74)

Patient ID*	Preop	3 Months	6 Months	12 Months
	2891.3	NA	NA	NA
	2457.3	NA	1905.7	NA
	2913.0	2690.7	NA	2849.3
	2721.5	1452.7	1707.3	NA
	NA	NA	NA	NA
	2613.0	2307.0	NA	NA
	2600.0	NA	NA	NA
	2068.3	NA	NA	NA

*Patient identifiers removed.

The ocular complications reported for the 11 eyes not successfully implanted with the IMT are summarized in Table 42. The most prevalent ocular complication was posterior capsular rupture (n=7), followed by vitreous loss requiring vitrectomy (n=6); this would be anticipated since posterior capsular rupture was the most common reason for the IMT not to be implanted.

Table 42
OCULAR COMPLICATIONS
11 NON-IMPLANTED EYES
(Amendment 010, Table 43, p. 75)

Event	Operative (N=11)	Day 1 (N=11)	Day 7 (N=10)	Interim (N=4)	Cumulative (N=11)
	n	n	n	n	n
Aborted surgery (IMT placement not attempted)	5				5
Choroidal detachment	2				2
Choroidal hemorrhage	1				1
Cortical remnants	1				1
Increased IOP requiring treatment ≤ 7 days		1		1	2
Iris damage	1				1
Iris transillumination defects ≤ 21 days		1			1
Iritis ≤ 30 days			1		1
Posterior capsular rupture	7				7
Vitreous hemorrhage		1			1
Vitreous loss	2				2
Vitreous loss – vitrectomy required	6				6
Wound leak		1			1
Zonular dehiscence ≤ 7 days	1				1

Ocular adverse events reported postoperatively, i.e., in the absence of the IMT in the eye, were summarized by the sponsor. A distorted pupil was observed in two eyes. Floaters, iris atrophy, iris transillumination defects, subretinal hemorrhage and zonular dehiscence were each observed in one eye. In some cases, the same adverse event was reported at multiple visits for the same subject at multiple visits, if the event was not resolved. Subjects without successful IMT implant have been divided into aborted surgery (n=5), in which the IMT was not inserted into the eye as a result of an unrelated surgical complication, and intraoperative IMT removal (n=6). Case summaries for subjects without successful IMT implantation were provided.

There were a total of 12 IMT explants. The IMT was removed from 8 eyes of subjects during the IMT-002 study and an additional 4 eyes during the IMT-002-LTM study. (Because 3 eyes explanted during the IMT-002 study were subsequently enrolled into the IMT-002-LTM study and 4 eyes were explanted during IMT-002-LTM study, IMT removal is shown for a total of 7 eyes in the IMT-002-LTM study.)

Eight subjects were dissatisfied with the IMT and requested removal, 4 during the IMT-002 study and 4 during the IMT-002-LTM study. Four subjects were dissatisfied with the results of IMT implantation and requested removal and IOL placement. Three of these subjects complained of glare in bright light, and the other subject noted haze, loss of peripheral vision in the implanted eye, and loss of depth perception. In 4 of these 8 eyes, visual acuity was improved from baseline, and in 2 eyes, visual acuity decreased from baseline. In all cases, explantation was uneventful and resulted in resolution of the dissatisfaction.

The IMT was removed from two eyes in the IMT-002 study at 1 month after implant due to condensation of the telescope portion of the IMT as discussed in Amendment 7, P050034. Condensation in the telescope was noted postoperatively from cracks in the lateral wall of the telescope, and it was concluded that these failures were due to either improper handling of the IMT and/or problems with the manufacturing process. The sponsor noted that with overall improvements introduced into the manufacturing process since the early devices were fabricated, and with additional surgeon training on handling of the IMT, this problem did not recur.

Removal of the IMT was performed in two eyes that underwent corneal transplantation as a result of corneal decompensation in the IMT-002 study.

Two IMT's were removed because of corneal decompensation. In both cases, corneal transplantation and IOL exchange were performed.

Thirteen subjects (eyes) did not return for the final examination at 24 months. The tables below contain the BCDVA (Table 43), ECD (Table 44), ocular complications (Table 45), and ocular adverse events (Table 46) for these subjects for the other follow-up examinations.

Table 43
BCDVA BY VISIT
13 EYES MISSING 24-MONTH FOLLOW-UP
(Amendment 007, Table 107, p. 171)

Patient ID*	Preop	1 Month	3 Months	6 Months	9 Months	12 Months	18 Months	24 Months
	20/182	20/125	20/121	20/125	20/110	20/110		
	20/264	20/526	20/577	20/693	20/800			
	20/209	20/115	20/83	20/73	20/87	20/76	20/87	
	20/145	20/87	20/96	20/76	20/121	20/100		
	20/418	20/240	20/121	20/125	20/125	20/115	20/115	
	20/630	20/182	20/200	20/152	20/145	20/138	20/121	
	20/693	20/289	20/174	20/289	20/400	20/348	20/364	
	20/191	20/96	20/96	20/91	20/83	20/91	20/105	
	20/200	20/105	20/80	20/83	20/76	20/91	20/91	
	20/551	20/219	20/200	20/219		20/230		
	20/348	20/200	20/145	20/182	20/115	20/152		
	20/630	20/526	20/200	20/240	20/230	20/174		
	20/276	20/174		20/145				

*Patient identifiers removed

Table 44
ENDOTHELIAL CELL DENSITY
13 EYES MISSING 24-MONTH FOLLOW-UP
(Amendment 007, Table 109, p. 172)

Patient ID*	Preop	3 Months	6 Months	9 Months	12 Months	18 Months	24 Months
	2639.7	2170.3	2014.3	2171.3	2243.7	NA	NA
	2649.7	3125.7	2856.7	3008.0	NA	NA	NA
	2276.7	2000.7	1962.0	1941.0	1935.7	1930.0	NA
	2860.3	2694.3	2737.3	2815.7	2434.3	NA	NA
	1821.3	1606.0	1672.7	1296.7	1214.3	736.0	NA
	3100.0	2976.3	2482.7	2718.0	2853.7	2900.0	NA
	2910.3	2871.0	2500.3	2707.3	2413.7	2633.3	NA
	2529.7	2478.7	2345.7	2556.0	2418.0	2392.3	NA
	2282.7	1605.7	1680.0	1613.7	1526.7	1621.0	NA
	2429.0	1322.3	1274.0	NA	1325.0	NA	NA
	2643.7	2189.7	2214.7	2443.3	2203.0	NA	NA
	1875.3	1227.3	1238.0	1446.7	1411.0	NA	NA
	1983.0	NA	1842.7	NA	NA	NA	NA

*Patient identifiers removed

Table 45
OCULAR COMPLICATIONS
13 EYES MISSING 24-MONTH FOLLOW-UP
(Amendment 007, Table 110, p. 173)

Event	Operative (N=13)	Day 1 (N=13)	Day 7 (N=13)	1 Month (N=13)	9 Months (N=11)	12 Months (N=11)	18 Months (N=6)	Cumulative (N=13)
	n	n	n	n	n	n	n	n
Corneal edema ≤ 30 days		1						1
Hyphema			1					1
Increased IOP requiring treatment ≤ 7 days		4						4
Iris prolapse	1		1					2
Iris transillumination defects ≤ 21 days		1	1					1
Iritis ≤ 30 days				1				1
Posterior capsule opacification					1	1	1	1
Suture rupture			1					1

Table 46
OCULAR ADVERSE EVENTS
13 EYES MISSING 24-MONTH FOLLOW-UP
(Amendment 007, Table 111, p. 173)

Event	1 Month (N=13)	3 Months (N=12)	6 Months (N=13)	9 Months (N=11)	12 Months (N=11)	18 Months (N=6)	Interim (N=8)	Cumulative (N=13)
	n	n	n	n	n	n	n	n
Anterior chamber inflammation > 30 days						1		1
Anterior ischemic optic neuropathy		1	1	1			1	1
Conjunctivitis							1	1
Corneal edema > 30 days							1	1
Dry eye				1	1			1
Guttae					1			1
Inflammatory deposits on IMT			1	1	2	2		3
Iris transillumination defects > 21 days	1	1	1	1	1	1		1
Iritis > 30 days				1			1	1
Synechiae		1	1	1	1	1		1

It should be noted that one of the missing subjects has a low ECD at the 18 month visit.

While inclusion of the available data on these 11 non-implanted eyes in the key analyses of safety and utility provides additional insight on the effect of attempted but failed implantation relative to the overall population, the sponsor believes the utility of the data presented above is to inform patients considering IMT implantation of the risk of failed implantation and the potential sequelae related to this risk. The sponsor has revised both the patient and the professional use labeling to include summary information on these 11 eyes. *The panel will be asked to give a recommendation on utilizing these data in the labeling.*

6. Post-Approval Studies

NOTE TO PANELISTS: ***FDA's inclusion of a section/discussion on a Post-Approval study (PAS) in this memo should not be interpreted to mean that FDA has made a decision on the approvability of this PMA device. The presence of post-approval study plans or commitments does not in any way alter the requirements for pre-market approval and a recommendation from the Panel on whether to approve a device or not must be based on the premarket data. The premarket data must reach the threshold for providing reasonable assurance of safety and effectiveness before the device can be found approvable and any post-approval study could be considered. The issues noted below are FDA's comments regarding potential post-approval studies should the panel find the device approvable following its discussion and deliberations of the premarket data.***

Based on the results of the IDE study (IMT-002), the long-term monitoring study (IMT-002-LTM), and the published literature, there are several long-term safety questions regarding the Implantable Miniature Telescope. These include the following:

a. What is the risk that the effects of IMT implantation on endothelial cell loss and age-related chronic endothelial cell loss will result in endothelial cell density (ECD) that fall below the threshold of where corneal function is irreversibly compromised?

b. What is the risk of failed implantations under conditions of general use, where implantations are performed by a diverse group of retinal specialists and anterior segment surgeons, and what are the potential sequelae related to this risk?

c. What is the risk of removals, replacements, repositioning and device failures of the IMT after successful implantations under conditions of general use?

d. Are the improvements in visual acuity in the first 2 years after implantation sustained long-term?

These issues are important in assessing the long-term safety of the IMT and how the device will perform under conditions of general use and could be addressed in post-approval studies (PAS).

At the time of the July 2006 panel meeting the FDA review team recommended that if the IMT is approved, two post-approval studies should be conducted as a condition of approval for this first-of-a-kind device:

- continued follow-up of the IMT-002 study cohort for up to 5 years after implantation to assess the longer term safety and effectiveness of the IMT; and

- rigorous follow-up for up to 5 years of newly recruited subjects who are implanted with the IMT after approval to assess device performance under conditions of general use and to assess the longer term safety and effectiveness of the IMT.

At the time of that panel meeting, the sponsor had submitted protocols for two post-approval studies to address the postmarket issues identified by the review team. On February 6, 2009 the sponsor indicated that they do not believe a PAS is warranted at this point because most subjects in the IMT-002-LTM study (5 year study) have reached the 4 year follow-up examination. However, if a PAS is recommended, the sponsor submitted a protocol IMT-002-LTME (dated January 15, 2009) for consideration that proposed to follow-up the IMT-002 cohort (including subjects who did not participate in the IMT-002-LTM study) out to 7 years (84 months). The proposed extension of the Long-term Monitoring Study would provide an additional 24 months of safety data for subjects enrolled in the IMT-002. Subjects who participated in the IMT-002 trial will be contacted and asked to participate in this study to monitor the long-term safety of the Implantable Miniature Telescope.

Subjects will undergo examination at twelve-month intervals (at 72 and 84 and also at study entry if that occurs outside of the windows for the month72 and 84 follow-up visit) to monitor endothelial cell density, posterior capsular opacification, intraocular pressure, visual acuity, device failures, complications and adverse events. FDA identified the following differences between the IMT-002-LTM and IMT-002-LTME protocols: 1) Under the new Long-term Monitoring Study protocol IMT-002-LTME subjects would be evaluated clinically at twelve month intervals instead of at the six month intervals used in the Long-Term Monitoring Study IMT-002-LTM. The IMT-002-LTM protocol stated that 178 of the IMT-002 subjects would be contacted and asked to participate in the IMT-002-LTM study; the IMT-002-LTME protocol does not indicate the number of IMT-002 candidate subjects who will be contacted. It is not clear whether pachymetry will be performed in the proposed study. Finally, adverse events omit posterior capsular opacification and IOP are omitted from the list of adverse events and complications to be monitored in the proposed study.

The sponsor and FDA are continuing to develop the post-approval studies. FDA recommends that protocol be revised to incorporate the following information:

- testable hypotheses for the post-approval study

- criteria for success
- the number of IMT-002 candidate subjects who will be asked to participate in the study
- calculations of the statistical power the IMT-002-LTM study has to assess longer-term effects of IMT on ECD changes that would be clinically significant.

Another issue to be considered is whether the ECD data generated by the continued follow-up will provide sufficient assurances about the long-term effects of IMT implantation on ECD under conditions of general use.

During the panel meeting, FDA will ask the panel questions about this post-approval study.

The two PAS proposals submitted before the July 2006 Ophthalmics Panel Meeting are described below for ease of reference.

a. <u>Continued Follow-up of the Pre-market Clinical Study (IMT-002) Cohort</u>

The sponsor's panel package for the July 14, 2006 Ophthalmology Devices Panel meeting included the sponsor's April 1, 2006 draft of post-approval study Protocol # IMT-002-LTM. The sponsor proposes to recruit subjects for the post-approval study from the 178 subjects who participated in the 24-month pivotal study and who were also present at the 24-month follow-up visit and to continue following them for up to 5 years post-implantation. The sponsor's stated objective was to monitor the long-term safety of the IMT and to provide an additional 36 months of safety data, for a total of 5 years of follow-up on subjects participating in the IMT. This study is a one arm, prospective, multi-center clinical study. In the evaluation of ECD changes, fellow eyes serve as controls for the IMT implanted eyes. Pivotal study participants were to be re-consented and examined at entry in the continued follow-up study and at months 30, 36, 42, 48, 54 and 60 post-implantation. Selected clinical parameters evaluated in the pivotal study were to be evaluated at each visit. These parameters include endothelial cell density (implanted and fellow eyes), corneal health and posterior capsular opacification, intraocular pressure, best corrected distance acuity, device failures, complications and adverse events. Quality of life was not to be evaluated. Statistical analyses were to be performed and reported for the same measures evaluated in the premarket clinical study (e.g., change in endothelial cell density from baseline, percent change in ECD from baseline, change in ECD between consecutive postoperative visits).

On July 31, 2006 the sponsor revised the protocol to add pachymetry, gonioscopy and anterior segment imaging by ultrasound biomicroscopy (or other method) at the 3-year examination (protocol IMT-002-LTM). These parameters were added to obtain additional information on the long-term safety of the IMT in the IMT-002 cohort. This revision allowed the sponsor to perform gonioscopy and anterior segment imaging in a subset of

up to 50 subjects and to obtain anterior segment images in subjects with anterior chamber depth of ≤ 3.0mm to determine the position of the IMT at 3 years. A subsequent revision to the PAS protocol added pachymetry at each study visit, i.e., at 36, 42, 48, 54 and 60 months postoperatively. These changes were consistent with recommendations made by the Ophthalmics Panel on July 14, 2006.

b. Follow-up of Patients Receiving the IMT Post Approval

The sponsor's panel package for the July 14, 2006 Ophthalmology Devices Panel meeting also included the sponsor's second post-approval study protocol IMT-PA-01 (dated April 20, 2006). That protocol was designed to characterize the safety and effectiveness of the IMT among the first 500 consecutive patients who receive the IMT after marketing approval (if approved) by following them through the fifth postoperative year. Follow-up of this larger, more diverse patient population would allow the detection of rare and late occurring adverse events. Study participants were to be examined at the study entry, day 1, week 1, month 1, 6, 12, 24, 36, 48, and 60. Telephone interviews of all study participants were to be conducted at 6 month intervals between annual clinical examinations.

Amendment A10 included a revised draft of this protocol IMT-002-PA dated October 30, 2007. The sponsor's stated objective for this study was to determine the incidence in the marketing environment (under conditions of general use) of late-occurring corneal edema, corneal opacity, and/or corneal decompensation, retinal detachment and secondary surgical intervention. The sponsor proposed to enroll 5,000 U.S. patients who receive the IMT after marketing approval (if approved) with the goal of obtaining 5 year follow-up data on 2,000 patients. Follow-up of this larger, more diverse patient population would also allow the detection of rare and late occurring adverse events.

Ophthalmologists who purchase a commercially available IMT were to have been required to participate in this IMT post-approval study. Surgeons were to obtain informed consent from new patients who agree to participate in the study. The informed consent would document the study subject's willingness to participate in the study and to allow the sponsor to access to their medical records if they respond "Yes" to any questions on a patient follow-up questionnaire). The surgeon would have asked each consenting subject to complete a Study Enrollment Card and return it to the sponsor.

Under the IMT-002-PA, the sponsor would have mailed a Post Treatment Follow-up (PTF) questionnaire to each study participant at 6, 12, 24, 36, 48, and 60 months after IMT implantation. The questionnaire was designed to provide a "Yes" or "No" response for each of the adverse events/complications being studied. The centers were to have the opportunity to add any other ocular findings or complications that they observed. A completed questionnaire will be considered valid only if all questions have been answered "Yes" or "No."

In the PAS of new IMT recipients proposed previously, it appears that a self-administered post-treatment IMT recipient questionnaire was to be the primary means of obtaining

information about the clinical endpoints. Investigator sites were also to have the opportunity to add any other ocular findings or complications that they observed. Evaluation of this protocol would need to consider how well the proposed study addresses the postmarket questions, and how to address the potential for under-reporting or over-reporting of study endpoints by study subjects. Since the IMT-002-PA protocol did not include specular microscopy to assess ECD, FDA noted that in the absence of ECD evaluation, a study conducted under that protocol would be limited in its ability to characterize the risk of irreversible loss of visual function associated with the effects of IMT implantation on ECD and the effects of age-related endothelial cell loss.

Should a post-approval study of new patients be recommended, the protocol would need to consider how the potential selection bias resulting from refusal to participate and how losses to follow-up would be assessed. If a PAS of new patients is recommended, Panel members may be asked to comment on the design of such a study.

Attachment 1:

FDA Executive Summary and Addendum, dated July 14th, 2006

FDA Executive Summary

Prepared for the
July 14, 2006, meeting of the
Ophthalmic Devices Panel

P050034
VisionCare Ophthalmic Technologies, Inc.
Implantable Miniature Telescope (IMT)

1. PROPOSED INDICATIONS FOR USE

The Implantable Miniature Telescope (IMT) is indicated for use in adult subjects with bilateral, stable, untreatable moderate to profound central vision impairment due to macular degeneration. Subjects selected for implantation should meet the following criteria:

- 55 years of age or older with bilateral, stable central vision disorders resulting from age-related macular degeneration (AMD) as determined by fluorescein angiography, and evidence of cataract.
- Distance BCVA (best corrected visual acuity) between 20/80 and 20/800, and adequate peripheral vision in one eye (the non-targeted eye) to allow for orientation and mobility.
- Achieve at least a five-letter improvement on the ETDRS (Early Treatment Diabetic Retinopathy Study) chart in the eye scheduled for surgery using an external telescope.
- Show interest in participating in a postoperative visual rehabilitation program.

2. DEVICE DESCRIPTION

VisionCare's IMT is a visual prosthetic device which, when combined with the cornea, constitutes a telephoto lens for improvement of visual acuity in subjects with bilateral moderate to profound macular degeneration. The IMT device is surgically implanted in the posterior chamber of the eye, in place of the eye's crystalline lens and is held in position by haptic loops.

The IMT device contains two micro lenses, which magnify objects in the central visual field, allowing the patient to see without the need for external low-vision aids. A magnified image is projected by the IMT implant onto the retina, enabling the patient to recognize and identify objects that could not otherwise be seen. The IMT device is

available in two models: Wide Angle (WA) 2.2X, and Wide Angle (WA) 3.0X, which provide nominal magnification of x2.2 and x2.7, respectively.

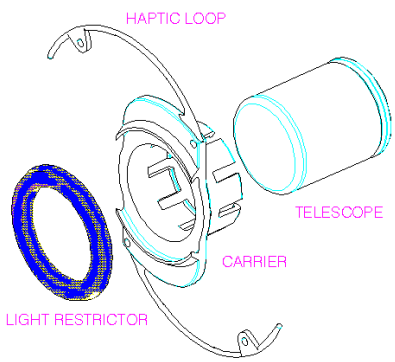

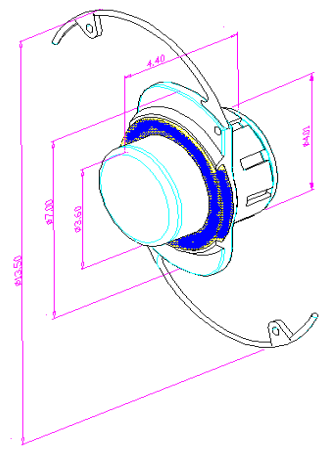

Both models are designed predominantly for the restoration of intermediate to far vision (increasing the ability to view objects several meters away from the patient). The addition of conventional spectacles provides correction for near vision activities.

The IMT device is implanted in one eye only. The implanted eye provides central vision, while the fellow eye continues to be used for peripheral vision.

The IMT implant is composed of three primary components; a fused silica capsule that contains optical elements, a clear polymethylmethacrylate (PMMA) carrier, and a blue PMMA light restrictor. The optical component is snap-fitted into the carrier. One of the internal components (not in contact with body fluids or tissue) of the IMT implant contains stainless steel, which may interfere with the safe use of Magnetic Resonance Imaging (MRI). Until MRI compatibility of the IMT implant has been established, the use of MRI is contraindicated, as stated in the proposed labeling.

3. PRE-CLINICAL STUDIES

a. Biocompatibility – Biological testing (M050004, Module 1)

A summary of the biocompatibility testing that the sponsor performed to support the safe use of the IMT is provided in the table below. The sponsor has conducted all testing in conformance with the relevant sections of International Organization for Standardization (ISO) 10993 and ISO 11979. Additionally, the sponsor has conducted all testing in conformance with Good Laboratory Practices (GLP) regulations. Testing was performed on ethylene oxide (EO) sterilized finished IMTs or a “mock device” that is a replica of the original product.

Test	Method	Extract(s)
Cytotoxicity	ISO Agarose Overlay	"Solid"
		Saline
		YAG Laser extract (saline)
	Inhibition of Cell Growth (1 point)	Water for Injection
	MEM Elution	Minimum Essential Medium
Systemic	USP and ISO Systemic Toxicity	Saline, sesame oil
Implantation	ISO Muscle Implantation Study (30 days and 12 weeks)	N/A
	Rabbit Ocular Implantation (6 months)	N/A
Genotoxicity	Ames Test	Ethanol, saline
	In Vitro Chromosomal Aberration Study	McCoy's 5A Medium
	Mouse Bone Marrow Micronucleus Study	Saline, sesame oil
Irritation, Sensitization	ISO Ocular Irritation	Saline
	Murine Local Lymph Node Assay	Saline, DMSO

Note: The cytotoxicity test on the YAG laser extract and the six month animal implantation tests were conducted on finished devices rather than "mock IMTs."

An in vivo intraocular implantation study was conducted in rabbits for a six month period. The control device was a PMA approved PMMA intraocular lens (IOL). The test and control lenses were surgically implanted in the posterior chamber of 10 rabbits following phacoemulsification of the natural lens (test lens in one eye, PMMA lens in contralateral eye). The eyes were evaluated by slit lamp examination according to a modified McDonald-Shadduck scoring system, and slit lamp exams were conducted preoperatively, on days 1, 3, 7, weeks 2 through 4, and biweekly until 6 months postop. At 6 months postop, the rabbits were euthanized and the eyes were enucleated and submitted for histopathological examination.

Macroscopic examinations revealed no ocular irritation trends that would be considered clinically significant effects from the test article. Microscopic evaluations of the ocular tissue sections revealed no adverse effects directly related to the test article. The changes in the lens capsules and the presence of regenerative and degenerative lenticular fibers were present for both test and control eyes and are related to the animal model used rather than a treatment effect. There were no significant differences between the eyes that received the test versus the control article.

FDA has no remaining concerns.

b. Biocompatibility - Physico-chemical testing (M050004, Module 1)

The sponsor performed the following physico-chemical testing as described in the ISO biocompatibility standard 11979-5.

vi. Extractables – The extraction was performed in purified water and then in chloroform at 37 degrees C for 72 hours. The sponsor has summarized the results as follows: High Performance Liquid Chromatography (HPLC) analysis showed no hydroxyethylmethacrylate (HEMA) detected in the purified water blank or test extract solutions (the chloroform blank and test extract solutions were analyzed but had peaks that interfered with the detection of HEMA and other compounds); GC/MS (Gas Chromatography/Mass Spectrometry)analysis showed no semi-volatile organic compounds in the blank or test extract solutions; Inductively Coupled Plasma (ICP) analysis showed that the metals/elements analyzed were all below the detectable level with the exception of Boron and Silicon (the concentrations were 1.86 ppm and 1.41 ppm, respectively); Ultraviolet (UV) spectroscopy identified no extractable substances in the purified water extract, gravimetric determination showed that the change in mass following the purified water and chloroform extractions was 0.00016g and 0.22353g, respectively. This study is acceptable and demonstrates that the levels of extractables are very low.

vii. Hydrolytic stability – This study looks for the degradation products due to hydrolysis. The testing was performed at 37° C and 50° C for 30 and 90 days. The sponsor has summarized the results as follows: HPLC analysis showed no HEMA detected; GC/MS analysis showed no semi-volatile organic compounds; ICP analysis showed that the metals/elements analyzed were all below the detectable level; UV spectroscopy identified no extractable substances, gravimetric determination showed that the change in mass following each extraction was <0.00041 g. This study is acceptable and demonstrates that this device is hydrolytically stable.

viii. Exhaustive extraction – This testing was performed using hexane to determine the total amount of extractable material from the device. The sponsor has summarized the results as follows: The analysis of the hexane extracts showed the percentage of material extracted from the test material was 0.02%. This test is acceptable and demonstrates that the total extractables in the device are very low.

ix. Photostability –The sponsor has performed the photostability testing in conformance with the procedures described in ISO 11979-5. No evidence of instability in the absorbance properties or release of toxic compounds was observed.

x. Nd:YAG testing – The devices were placed in vials with 2 ml of saline and were subjected to laser damage at a power of 5.1 mJ for 50 hits on the periphery of the test article. The sponsor noted that the laser beam did not pass through the glass portion of the test article. The sponsor has summarized the results as follows: HPLC analysis showed no HEMA detected; GC/MS analysis showed no semi-volatile organic compounds; ICP analysis showed that the metals/elements analyzed were all below the detectable level with the exception of Boron and Silicon (the concentrations were 4.4 ppm and 5.4 ppm, respectively); and UV spectroscopy identified no extractable substances. The study demonstrates that the

Nd:YAG does not damage the periphery of the IMT. The sponsor is recommending that the laser not be focused through the central portion of the IMT as this would cause damage to the device. Therefore, no evaluation was performed to determine if the laser could be focused through the optical portion of the IMT.

FDA has no remaining concern.

c. Sterilization, Packaging and Shelf Life (M050004, Module 2)

The IMT is packaged in a protective case with cap, and then placed into a blister pack with a Tyvek lid, and ethylene oxide sterilized for a sterility assurance level calculated to 10^{-6}. FDA has no remaining concerns regarding the sterilization of the IMT – all issues were resolved in PMA P050034.

The sponsor has proposed a 24 month shelf life for the IMT. FDA has no remaining issues regarding the shelf life at 24 months - all issues were resolved in PMA P050034.

d. Manufacturing (M050004, Module 3)

FDA has no remaining concerns. This module was accepted and closed September 12, 2005.

4. CLINICAL STUDIES

The sponsor conducted a prospective multi-center clinical trial utilizing twenty-eight (28) clinical sites and enrolling a total of 218 consecutive subjects.

a. Safety/ Effectiveness Endpoints

Primary Effectiveness Endpoint for this study was defined as an improvement of 2 lines or greater in either near or distance best corrected acuity in 50% of the implanted eyes at 12 months post-implantation.

Quality of Life surveys (Activities of Daily Living (ADL) and National Eye Institute Visual Function Questionnaire (NEI-VFQ-25)) were secondary measurements of efficacy.

The primary Safety Endpoint for this study was the mean percentage endothelial cell density (ECD) loss less than or equal to 17% at one year post IMT implantation.

An average loss of 10-17% within one year after large incision surgery was noted from the sponsor's review of the literature. The sponsor's objective was to demonstrate that the mean percentage of cell loss could be demonstrated with statistical confidence to be no more than 17%. The statistical power used for the sponsor's sample size calculations was

80% at the expected mean loss of 13.5% (mean of 10% to 17%). The standard deviation of percentage loss in the ECD was assumed to be 0.175 (17.5%), which was estimated based on the feasibility clinical study.

Secondary safety endpoint was preservation of best corrected visual acuity. Specifically, no more than 10% of implanted eyes were to experience a loss of more than 2 lines of either near or distance BCVA without a corresponding improvement in BCVA (gain of 2 lines or more). For example, a gain of 2 or more lines of near BCVA (BCNVA – best corrected near visual acuity) in eyes with loss of more than 2 lines distance BCVA (BCDVA – best corrected distance visual acuity), and vice versa.

Adverse events and complications were collected as additional safety endpoints.

b. Inclusion/Exclusion Criteria

Key inclusion criteria included a BCDVA (best corrected distance visual acuity) between 20/80 and 20/800, and adequate peripheral vision in one eye (the non-implanted eye) to allow navigation. Prospective study subjects needed to demonstrate improvement with an external telescope of at least five letters on the ETDRS chart in the eye scheduled for surgery. Subjects selected to enroll in this study had to be at least 55 years of age, and have an anterior chamber depth of ≥2.5 mm and have the need for cataract surgery.

Evidence of active CNV (choroidal neovascularization) on fluorescein angiography or treatment for CNV within the past six months constituted an exclusion from enrollment. If the fellow eye demonstrated an anticipated need for cataract extraction and intraocular lens implantation during the first 12 months following IMT implantation, they were not selected for enrollment. If cataract extraction was anticipated, it had to be performed at least 30 days prior to enrollment in the clinical study. Ophthalmic related surgery within the 30 days preceding implantation of the IMT was an exclusion criterion. The following conditions in the designated operative eye were also cause for exclusion: myopia > 6.0 D; hyperopia > 4.0 D; axial length < 21 mm; ECD < 1600 cells/mm^2; narrow angle, i.e., less than Shaffer grade 2; cornea stromal or endothelial dystrophies or disorders; inflammatory ocular disease; zonular weakness or instability of the crystalline lens; pseudoexfoliation; diabetic retinopathy; untreated retinal tears; retinal vascular disease; optic nerve disease; history of retinal detachment; and retinitis pigmentosa. Additional exclusions included the presence of any intraocular tumor and medical or ophthalmic condition that in the opinion of the investigator rendered the subject unsuitable for participation in the study. Any ophthalmic pathology that compromised the patient's peripheral vision in the fellow eye or any ocular condition that predisposed the patient to eye rubbing was also causes for exclusion.

Subjects with significant communication impairments or severe neurological disorders that would interfere with the study requirements were deemed unsuitable. Additionally, a history of previous intraocular or corneal surgery of any kind in the operative eye(s), whether refractive or therapeutic prohibited enrollment. If an individual had a known sensitivity to planned study concomitant medications, they could not participate in the

study. Typically, in order for a patient to be suitable for enrollment in this clinical trial, they could not be participating in any other clinical trials, even if not ophthalmic. And finally, a history of steroid-responsive rises in intraocular pressure, uncontrolled glaucoma, or preoperative (pre-op) intraocular pressure (IOP) >22 mm Hg deemed a patient unsuitable for enrollment.

Once selected to participate in the clinical trial, a specific procedure was followed to select the operative eye. Visual acuity was assessed with a hand-held external telescope utilizing ETDRS charts. The sponsor provided two or more sets of 2.2X and 3.0X Galilean external telescopes with reading caps to each site for use in the trial. These Galilean telescopes were used for all in-office testing and a 2.2X Galilean external telescope was given to potential subjects to try at home for a period of at least three days. Subjects were assigned either a 2.2X or 3.0X telescope based on their need for magnification and their responsiveness to magnification. Subjects who did not notice any improvement with a 2.2X were then tested with a 3.0X. If they responded to the 3.0X, then they were given a 3.0X. Subjects had to achieve at least a five-letter improvement (minimal one line) on the ETDRS chart in the proposed operative eye with at least one of the external telescopes in order to proceed with the surgery. Subjects who did not meet this criterion were excluded from the trial.

If the patient had BCDVA better than 20/200 in either eye, the eye with worse visual acuity was chosen for implantation. If BCDVA was equal to or worse than 20/200, or the same in both eyes, the physician and patient decided which eye would be implanted.

Subjects experiencing improvement in visual acuity with the external telescope(s), were further evaluated for eligibility based on distance and near best spectacle corrected visual acuity; manifest refraction; IOP by applanation tonometry; slit lamp evaluation; dilated fundus examination and photography; flurorescein angiography; specular microscopy; pachymetry; and, A-scan.

c. Operative Procedures

In preparation for surgery, the subjects were anesthetized via either retrobulbar or peribulbar injection. The IMT was implanted after phacoemulsification had been performed through either a limbal insertion technique or a scleral tunneling procedure. Limbal incisions were 10 mm – 11 mm at 120º to 160º degrees arc length. The scleral tunnel incisions were 10mm in length and placed from the 10 o'clock to the 2 o'clock positions approximately 2.5 mm – 3 mm posterior to the limbus. Both the limbal and scleral tunnel incisions methods utilized a 6.5 mm continuous curvilinear capsulorhexis. With both techniques, placement was in the capsular bag along with the haptics and utilized a peripheral iridectomy.

d. Post-operative Evaluation and Examination Schedule

Postoperatively, one drop of a topical ophthalmic antibiotic solution was to be administered following surgery, and then continued per product labeling for at least two days. One drop of Voltaren Ophthalmic (diclofenac sodium 0.1%, CIBA Vision Ophthalmics) or equivalent was to be administered following surgery, and then continued per product labeling for at least two days. Prednisolone acetate (1%) or equivalent was to be administered every 2 waking hours for the first two weeks post-implantation, followed by administration every 4 waking hours for 2-4 weeks. The prednisolone acetate (1%) was to be gradually tapered over the next 4 to 6 weeks for a total duration of postoperative steroid treatment of approximately 3 months. Homatropine 5% or a similar drug was to be administered twice daily for 4 to 6 weeks postoperatively. If homatropine was inadequate to maintain cycloplegia, the use of atropine was allowed. The Investigator exercised clinical judgment in deciding if a more moderate or rapid tapering of the topical steroid regimen was indicated for some subjects, particularly in eyes with signs of medicamentosa.

FDA had concerns about the aggressive postoperative regimen of ophthalmic steroids. The sponsor was asked to provide FDA with information regarding the presence or absence of medicamentosa and/or any other complications resulting from such an intense postoperative medication regimen. The sponsor responded to this issue in Amendment #2 by stating that there were no cases of medicamentosa and no other complications related to the post-operative medication regimen reported in the clinical trial. The recommendation for intense post-operative regimen will be reflected in the labeling.

Subjects were followed and evaluated according to the following schedule:

Preoperative Evaluation	Day -90 to Day 0
Operative Evaluation	Day 0
Day 1	24 to 36 hours postoperative
Day 7	4 to 10 days postoperative
1 month	2 to 6 weeks postoperative
3 months	6 to 18 weeks postoperative
Vision training	Week 1, 2, 4, 6, 10 and 12, +/- 4 days
6 months	18 to 32 weeks postoperative
9 months	32 to 44 weeks postoperative
12 months	44 to 56 weeks postoperative
18 months	66 to 78 weeks postoperative
24 months	84 to 102 weeks postoperative

Specular microscopy was performed preoperatively and at the Month 3, 6, 9, 12, 18 and 24 examinations in the treated and fellow eyes with the non-contact Konan or Topcon Specular Microscope. Three images were obtained at each visit. Specular micrographs were sent to a central reading center (B. McCarey, Ph.D., Emory University) for analysis and the mean density from all three images was used for statistical analyses.

Sites were instructed to take three acceptable images at each visit. The mean density from the three images was used for the analysis. A central reading center performed the analyses and conducted the cell counts according to a preordained methodology.

e. Clinical study results

A total of 218 consecutive subjects were enrolled at 28 U.S. clinical sites. Twelve (12) of the 218 enrolled eyes were excluded from further analyses, resulting in a study population of 206 eyes of 206 enrolled subjects. Of the 12 excluded subjects, one subject canceled surgery, in 5 eyes the IMT was not implanted due to surgical complications, and in 6 eyes the IMT was removed at the time of surgery. Of the 206 eyes comprising study population, 115 eyes were implanted with the WA 2.2X and 91 eyes were implanted with the WA 3.0X.

At the time of database lock, 194 eyes had reached the 12-month follow-up, 180 eyes had reached the 18-month follow-up examination and 148 eyes had reached 24-month follow-up. Based on statistical modeling, (generalized estimating equation [GEE] and regression methods), a determination was made by FDA that the PMA could be submitted with these numbers of subjects at the corresponding follow-up periods.

i. Accountability

Accountability for this study was ≥ 98.5% for visits through 6 months, 97.0% (196/202) at 9 months, 97.5% (194/199) at 12 months, 91.4% (180/197) at 18 months, and 95.5% (148/155) at 24 months. A total of 16 subjects have been discontinued from the study, including 10 subjects who died during the course of follow-up and 6 subjects who discontinued following removal of the IMT prior to study completion. A total of 8 subjects had the IMT explanted postoperatively. Six (6) of these 8 subjects were discontinued from the study before completing required follow-up.

ii. Demographics

Demographically, 108 (52.4%) subjects were male and 98 (47.6%) were female. The mean age was 75.4 years (standard deviation (S.D.) 7.2, range 55 – 93 years). The majority of subjects were Caucasian (198/206 or 96.1%); 1.9% of the study population was Hispanic, 1.5% was black and 0.5% was Asian. The left eye has undergone IMT implantation more frequently than the right eye (52.4% versus 47.6%).

iii. Pre-operative/ Operative Parameters

Preoperative clinical analysis shows that the average anterior chamber depth (ACD) was 3.15 mm (S.D. 0.37 mm, range 2.48 - 4.74 mm). Preoperative axial length, determined by A-scan, was 23.74 mm (S.D. 0.93, range 21.53 – 26.14 mm). The major form of AMD represented was described as disciform scar only (n=91 or 44.2%), or geographic atrophy only (n=78 or 37.9%). Cataract type was specified as

nuclear in the vast majority of eyes (n=203 or 98.5%). At baseline, mean BCDVA was 20/312, mean BCNVA at 8 inches was 20/315 and mean BCNVA at 16 inches was 20/262.

The operative characteristics of the study cohort show that a limbal insertion was performed in 63.6% (131/206) of the study subjects, and the remaining eyes (36.4% or 75/206) underwent scleral tunneling. In 100% of eyes (206/206) the crystalline lens was extracted via conventional phacoemulsification techniques. In 87 eyes (87/206 or 42.2%), Healon V alone or in combination with another viscoelastic was used during the procedure. Mean capsulorhexis size was 6.6 mm (S.D. 0.59 mm; range 5.0 – 8.5 mm). In most eyes (203/206 or 98.5%) the iris position was flat following IMT implantation. The superior loop of the haptic was reported to be in the bag in 96.1% (198/206) of eyes and the inferior loop of the haptic was in the bag in 97.6% (201/206). The IMT position was reportedly centered in 99.5% (205/206) of eyes. As required in the study protocol, iridectomy was performed in all but 4 (1.9%) study eyes. Other surgical procedures performed at the time of IMT implantation consisted of pupil stretch and lysis of peripheral anterior synechiae.

iv. Effectiveness outcomes

Improvement of 2 lines or greater in either near or distance best corrected acuity was reported for 89.1% of eyes at 6 months, 89.7% at 9 months, and 90.1% at 12 months, 87.2% at 18 months and 85.7% at 24 months.

Eyes with profound visual impairment (pre-op BCDVA worse than 20/400) showed a significantly higher success rate at 12 and 18 months than eyes with moderate impairment (pre-op BCDVA 20/80 to 20/160) at baseline. This trend continued at 24 months.

SUMMARY OF VISUAL ACUITY EFFECTIVENESS ENDPOINTS

BCVA Endpoints	**6 Months n (%) % CI**	**9 Months n (%) % CI**	**12 Months n (%) % CI**	**18 Months n (%) % CI**	**24 Months n (%) % CI**
Effectiveness (N=)	201	195	192	179	147
Overall Effectiveness Endpoint ≥2 lines gain of BCDVA or BCNVA*	***179 (89.1%) 84.7%, 92.5%***	***175 (89.7%) 85.4%, 93.1%***	***173 (90.1%) 85.8%, 93.4%***	***156 (87.2%) 82.3%, 91.1%***	***126 (85.7%) 80.1%, 90.2%***
Binomial exact p-value for Ha: > 50%	***<.0001***	***<.0001***	***<.0001***	***<.0001***	***<.0001***
≥2 lines gain of BCDVA and BCNVA*	138 (68.7%) 62.8%, 74.1%	134 (68.7%) 62.8%, 74.2%	141 (73.4%) 67.7%, 78.6%	127 (70.9%) 64.9%, 76.5%	99 (67.3%) 60.4%, 73.7%
Not reported/IMT removal	1	1	2	1	1
Total	202	196	194	180	148

Best Corrected Distance Visual Acuity (BCDVA)

At 6 months 156/201 (77.6%) eyes gained at least two lines of BCDVA, 126/201 (62.7%) gained at least three lines of BCDVA, 79/201 (39.3%) gained at least four lines of BCDVA, 40/201 (19.9%) gained at least five lines of BCDVA, and 14/201 (7.0%) gained at least six lines of BCDVA. At 12 months, 155/193 (80.3%) eyes gained at least two lines, 128/193 (66.3%) eyes gained at least three lines, 87/193 (45.1%) eyes gained at least four lines, 49/193 (25.4%) eyes gained at least five lines, and 21/193 (10.9%) gained at least 6 lines of BCDVA. Similar outcomes were reported at 18 and 24 months, with approximately 75% of eyes gaining at least 2 lines, over 60% gaining at least 3 lines, over 40% gaining $\geq$ 4 lines, about 20% with a gain of $\geq$ 5 lines and approximately 10% with a gain of at least 6 lines of BCDVA. The mean increase in lines of BCDVA was 3.3 lines (S.D. 2.1) at 6 months, 3.3 lines (S.D. 2.3) at 9 months, 3.4 lines (S.D. 2.3) at 12 months, 3.3 lines (S.D. 2.2) at 18 months, and 3.1 lines (S.D. 2.2) at 24 months. These gains in BCDVA were both statistically and clinically significant.

Stratification by age at implant or gender did not affect the improvement in BCDVA. When BCDVA was stratified by the two IMT models, i.e., WA 3.0X and WA 2.2X, better visual outcomes were observed in subjects implanted with the WA 3.0X at 12 and 18 months

At 12 months, 20.0% of subjects with moderate impairment gained three or more lines of BCDVA. Sixty-one and eight tenths percent (61.8%) of subjects with severe impairment (pre-op BCDVA 20/161 to 20/400) gained three or more lines of BCDVA and 88.9% of subjects with profound impairment gained two or more lines of BCDVA. This difference was statistically significant ($p < 0.001$). At 18 months postop, 26.3% of subjects with moderate impairment and 77.6% of those with profound impairment gained at least three lines of BCDVA. At 24 months, 23.5% of subjects with moderate impairment, 55.4% of eyes with severe impairment, and 76.6% of eyes with profound impairment gained at least three lines of BCDVA. Thus, subjects with profound impairment gained considerably more lines of BCDVA than subjects with moderate impairment at 12, 18 and 24 months.

Best Corrected Near Visual Acuity (BCNVA)

BCNVA was evaluated at both eight (8) and sixteen (16) inches for all of the near measurements (in this section, unless specific distance is indicated, BCNVA refers to both distances). Near visual acuity assessments were based on M values, not on the number of letters correctly read. If only 1 or 2 letters could be read correctly at the 8.0M line, which is the worst line on the reading card used in this study, a visual acuity of 10.0M was recorded. If none of the letters could be read correctly, a visual acuity of 12.5M was recorded.

At 8 inches, a gain of at least 2 lines of BCNVA was reported for 137/201 (68.2%) eyes, a gain of $\geq$ 3 lines of BCNVA was reported for 98/201 (48.8%), a gain of $\geq$ 4

lines of BCNVA was reported for 61/201 (30.3%) eyes, a gain of ≥ 5 lines of BCNVA was reported for 38/201 (18.9%), and a gain of ≥ 6 lines of BCNVA was reported for 18/201 (9.0%) at 6 months. At 12, 18 and 24 months, 70% of eyes had a gain of ≥ 2 lines of BCNVA. A gain of ≥ 3 lines was reported for approximately 50%, a gain of ≥ 4 lines of BCNVA in 35% to 40% of eyes, a gain of ≥ 5 lines in close to 20% of eyes, and a gain of ≥ 6 lines of BCNVA at 8 inches in fewer than 10% of eyes at each of these visits. The mean line increase in BCNVA at 8 inches was stable over time with a gain of 2.3 lines (S.D. 2.6) at 6 months, 2.3 lines (S.D. 2.8) at 9 months, 2.4 lines (S.D. 2.9) at 12 months, 2.4 lines (S.D. 2.7) at 18 months, and 2.3 lines (S.D. 3.0) at 24 months.

At 24 months, subjects with profound impairment gained considerably more lines of BCNVA at 8" than subjects with moderate impairment. The mean line increase in BCNVA at 16 inches was 2.1 lines (S.D. 2.4) at 6 months, 2.4 lines (S.D. 2.4) at 9 months, 2.4 lines (S.D. 2.5) at 12 months, 2.3 lines (S.D. 2.4) at 18 months, and 2.3 lines (S.D. 2.6) at 24 months. A gain of ≥ 2 lines of BCNVA at 16 inches was reported for 136/201 (67.7%) eyes. One hundred four (104) of these eyes (51.7%) gained at least three lines, 55 (27.4%) gained at least four lines, 19 (9.5%) gained at least five lines, and 8/201 (4.0%) eyes gained at least six lines of BCNVA at 16 inches. These eyes remained generally stable at 9 months, 12 month, 18 months and 24 months with respect to their gain in lines of acuity. On the average, a third of the implanted eyes gained ≥ 4 lines of BCNVA across the various examination intervals within the investigation. Of particular note is that 10% to 15% of eyes in the study cohort gained 5 or more lines of BCNVA at the 16 inch near testing distance. A gain of 3 or more lines was generally consistent when best corrected near acuity was measured at 8 inches or at 16 inches. The impact of stratification factors was observed at 18 months only. Those eyes implanted with WA 3.0X and eyes with profound impairment gained significantly more lines of BCNVA at 16 inches than eyes implanted with WA 2.0X or moderate impairment respectively.

Improvement in BCDVA and BCNVA

To demonstrate that the IMT can improve both distance and near visual acuity, the improvement in BCNVA at 8 or 16 inches was correlated with the improvement in BCDVA for all eyes at 12 months. Data was available for BCDVA and BCNVA at 12 months for 193 eyes. 83.4% of subjects (161/193) experienced a gain of both best corrected distance and near acuity at 12 months.

At 12 months, a gain of ≥ 2 lines or more in both best corrected distance and near visual acuity was achieved by 73.1% (141/193) of eyes and a gain of or ≥ 3 lines was reported for 52.8% (102/193) of subjects, respectively.

At 18 months, 70.9% (127/179) gained ≥ 2 lines of BCNVA as well as > 2 lines BCDVA. Close to 50% of eyes (89/179) gained ≥ 3 lines of BCDVA and ≥ 3 lines of BCNVA.

At 24 months, 67.3% (99/147) gained ≥ 2 lines of BCNVA with a gain of ≥ 2 lines BCDVA. At 24 months, 51.0% of eyes (75/147) had a gain of ≥ 3 lines of BCDVA with a gain of ≥ 3 lines of BCNVA.

Effect of Pre-operative Parameters on Effectiveness Outcomes

A GEE analysis was performed on the primary effectiveness target for 12 to 24 months. Age at implant, postoperative visit and gender were found to have an effect on the improvement in BCDVA. The moderate impairment group had the lowest success rate among the three preoperative BCDVA groups, with more severely impaired eyes achieving the most significant improvement in vision. Acuity increased from the youngest age group to the oldest age group for subjects with a 2.2X IMT implant. For subjects with a 3.0X IMT implant the improvement in visual acuity among the three younger age groups were similar., but the oldest age group had the lowest success rate among the four age groups. The improvement in visual acuity at 12 months was slightly higher for female subjects than for males. However, the proportion of eyes in female subjects with improvement in visual acuity decreased about 7% at 18 and 24 months, while for males subjects the proportion of eyes achieving an improvement in visual acuity remained relatively constant between 12 and 24 months.

Quality of Life Assessment

The sponsor administered the National Eye Institute Visual Function (NEI-VFQ) and Activities of Daily Living (ADL) Questionnaires.

The VFQ-25 subscales of general vision, near activities, and distance activities have been described as particularly important in demonstrating the difficulty individuals with bilateral severe AMD have in performing daily activities. At 12 months these respective subscales improved by 14.0 points, 11.2 points, and 7.9 points. Additionally, clinically significant improvements across all vision specific subscales (social functioning, mental health, role difficulties, and dependency) were observed. In subscales where no improvement or a decline in performance was expected (color vision, driving and peripheral vision), performance was stable or declined.

The most significant point change in the quality of vision subscales was reported for general vision, followed by near vision activities and distance vision activities. While there was a small decrease in the point change for general vision over the 12 month follow-up period for this instrument, the point change remained relatively stable for near vision activities. Improvement in the vision specific activities subscales of the VFQ-25 was most substantial at 3 and 6 months, perhaps reflecting the noticeable change from baseline in best corrected acuity experienced by the majority of study subjects. There was a slight decrease in the point change for social functioning and mental health at 9 months. However, for the most part, the reported values remained relatively stable over time for all four subscales. When the factors of age, gender, IMT model, preoperative BCDVA and 12-month visual acuity improvement were

analyzed, no effect was found for any of these baseline characteristics on the improvement in the VFQ composite score ($p>0.05$). The sponsor provided a data listing of subjects (n=7) whose overall VFQ-25 composite score worsened by more than 15 points at the last available visit. Of these 7 subjects, 5 experienced improvement in at least one measure of acuity, and the remaining 2 subjects had no change in acuity.

The sponsor presented the mean scores and mean changes in scores for both the NEI-VFQ and ADL Questionnaires. FDA requested that the sponsor provide FDA with the frequency analyses for each rating within each category assessed in the NEI-VFQ and ADL questionnaires for both the scores and change in score analyses. The sponsor did comply with this request and furnished a stratification of each question and the frequency of each response within each category in Amendment #2.

Some questions on items 5, 6, 7, 8, and 9 on the VFQ-25 specifically identify visual activities that are related to the IMT population. For example, with improved visual acuity, one would expect to have an increase in independent mobility, reading street signs and names of stores, and reading ordinary print in newspapers. Subjects reporting extreme difficulty with the items pertaining to visual function generally showed a lessening of this difficulty by one year postop. The number of subjects reporting little and moderate levels of difficulty increased at one year**.** It was unclear from the data reported whether some of the subjects who initially reported extreme difficulty subsequently reported moderate difficulty. FDA requested that the sponsor evaluate pertinent items to determine if the subjects reporting a particular level of difficulty in task performance remained in the same category throughout the first 12 months. The sponsor, however, has not adequately addressed this issue.

Analysis of the ADL outcomes showed improvement from 41.4 (S.D. 15.6) at baseline to 60.2 (S.D. 17.5) at 3 months, 58.6 (S.D. 18.8) at 6 months, 57.3 (S.D. 19.0) at 9 months, and 55.9 (S.D. 19.6) at 12 months. At 12 months, the mean improvement from baseline was 14.1 points. For the subcategory of mobility, the mean score improved from 53.8 (S.D. 19.1) at baseline to 69.7 (S.D. 18.3) at 3 months, 68.0 (S.D. 19.8) at 6 months, 66.8 (S.D. 20.0) at 9 months, and 66.0 (S.D. 20.2) at 12 months. The mobility subscale improved by 12.0 points at 12 months versus baseline. For the subcategory of distance activities, the mean ADL score improved from 43.7 (S.D. 15.5) at baseline to 61.3 (S.D. 18.3) at 3 months, 59.2 (S.D. 19.0) at 6 months, 59.0 (S.D. 19.6) at 9 months, and 57.3 (S.D. 20.2) at 12 months. The distance activities subscale improved by 13.4 points at 12 month versus baseline. The mean score for the subcategory of near activities improved from 30.9 (S.D. 18.6) at baseline to 53.2 (S.D. 20.1) at 3 months, 52.2 (S.D. 22.3) at 6 months, 49.6 (S.D. 22.2) at 9 months, and 48.5 (S.D. 22.8) at 12 months. The scores for near activities improved by 17.0 points at 12 months versus baseline. For all three ADL constructs (mobility, distance activities and near activities) there was a substantial improvement, the largest being for near activities.

During the July 14, 2006 meeting, the Ophthalmic Devices Panel will be asked to discuss the implications, if any, of the Quality of Life Assessment outcomes for the approval of IMT device.

v. Safety outcomes

The proportion of eyes with >2 lines loss of BCDVA and no change/loss of BCNVA, or >2 lines loss of BCNVA and no change/loss of BCDVA, was 4.5% (9/201) at 6 months, 4.6% (9/195) at 9 months, 5.2% (10/193) at 12 months, 4.5% (8/179) at 18 months, and 6.1% (9/147) at 24 months. Loss >2 lines of both BCDVA and BCNVA occurred in 1.0% of eyes at 6 months, 2.1% at 9 months, 1.0% at 12 months, 1.1% at 18 months and 1.4% at 24 months. The proportion of eyes with >2 lines loss of BCDVA and no change of BCNVA was 0.5% at 6 months, 1.0% at 9 months, 0.5% at 12 months, 0.6% at 18 months and 0.0% at 24 months. Finally, the proportion of eyes with >2 lines loss in BCNVA and no change in BCDVA was 3.0% at 6 months, 1.5% at 9 months, 3.6% at 12 months, 2.8% at 18 months and 4.8% at 24 months. Only 3 eyes (3/201 or 1.5%) were reported to have a loss of >2 lines of BCDVA at 6 months. The percentage of eyes with this loss of BCDVA remained relatively stable over the course of follow-up, with 3.1% (6/195) at 9 months, 2.1% (4/193) at 12 months, 2.2% (4/179) at 18 months, and 1.4% (2/147) at 24 months.

SUMMARY OF SAFETY ENDPOINTS

Safety (N=)	201	195	193	179	147
Overall Safety Rate >2 lines loss of BCDVA and no change/loss of BCNVA or >2 lines loss of BCNVA and no change/loss of BCDVA†	***9 (4.5%) 2.4%, 7.7%***	***9 (4.6%) 2.4%, 7.9%***	***10 (5.2%) 2.8%, 8.6%***	***8 (4.5%) 2.2%, 7.9%***	***9 (6.1%) 3.2%, 10.4%***
Binomial exact p-value for Ha: safety rate < 10%	***0.0033***	***0.0048***	***0.0120***	***0.0055***	***0.0696***
>2 lines loss of BCDVA and BCNVA‡	2 (1.0%) 0.2%, 3.1%	4 (2.1%) 0.7%, 4.6%	2 (1.0%) 0.2%, 3.2%	2 (1.1%) 0.2%, 3.5%	2 (1.4%) 0.2%, 4.2%
>2 lines loss of BCDVA and no change in BCNVA§	1 (0.5%) 0.0%, 2.3%	2 (1.0%) 0.2%, 3.2%	1 (0.5%) 0.0%, 2.4%	1 (0.6%) 0.0%, 2.6%	0 (0.0%) 0.0%, 2.0%
>2 lines loss of BCNVA and no change of BCDVA§	6 (3.0%) 1.3%, 5.8%	3 (1.5%) 0.4%, 3.9%	7 (3.6%) 1.7%, 6.7%	5 (2.8%) 1.1%, 5.8%	7 (4.8%) 2.3%, 8.8%
Not reported/IMT removal	1	1	1	1	1
Total	202	196	194	180	148

At 12 months, two eyes (2/193 or 1.0%) experienced a loss of more than 2 lines of both BCDVA and BCNVA at 8 inches *or* 16 inches. The loss of BCNVA at 8 or 16 inches was correlated with the loss of BCDVA at 12 months (n=193) in order to

determine the number of eyes with a loss of more than 2 lines of both BCDVA and BCNVA. The same analysis was conducted for all eyes treated at 18 months. One hundred seventy-nine (179) eyes had both BCDVA and BCNVA measurements at 18 months. Of these 179 eyes, two (1.1%) experienced a loss of more than 2 lines of both BCDVA and BCNVA at 8 inches or 16 inches at 18 months. At 24 months, 2 eyes (4%) of the 147 eyes with BCDVA and BCNVA measurements experienced a loss of more than 2 lines of both best corrected distance and near acuity at 8 inches or 16 inches. Only 5 study eyes lost more than 2 lines of both BCDVA and BCNVA during the course of the study.

Summary of Adverse Events and Complications

Adverse events are tabulated in Attachment A. There were two cases of corneal decompensation resulting in two corneal transplants. Operatively, there were 2 (1.0%) adverse events. These adverse events consisted of an IMT with condensation on the device and an IMT with a broken haptic, both of which required replacement. These are further described in section 18.7, Device Failures.

There were 8 IMT explants. Four subjects (008-207, 008-208, 010-206, 012-210) requested removal of the IMT since they were dissatisfied with the device. In 2 of these 4 eyes, visual acuity was improved from baseline and in the other 2 eyes, visual acuity had decreased from baseline. The IMT was removed from two eyes (013-202, 023-217) due to condensation of the telescope portion of the IMT (see Section 18.7: Device Failure). Removal of the IMT was also performed in the eyes (013-209, 031-203) that underwent corneal transplantation as a result of corneal decompensation.

The most prevalent complication reported (see Attachment B) for the study population consisted of increased IOP requiring treatment within the first week after surgery, with 50 cases (24.3%) reported at Day 1 and 14 cases (6.8%) reported at Day 7. Reports of increased IOP requiring treatment occurring beyond 7 days were classified as adverse events. The sponsor believes that the increase in IOP is related to the use of high molecular weight viscoelastic material (Healon V) used in the eye and to coat the IMT.

Posterior Capsular Opacification

Posterior capsule opacification (PCO) was reported in a single eye (1/174 or 0.6%) at 18 months and in two eyes (2/147 or 1.4%) at 24 months. Both cases were graded "moderate." No Nd:YAG capsulotomies were performed during the study. Nd:YAG laser was used to re-open the peripheral iridectomy in seven eyes.

While the clinical trial did not report any severe occurrences of PCO, the sponsor was asked to provide FDA with a treatment approach for visually significant PCO. Specifically, the sponsor was asked if a YAG capsulotomy can be performed. If a YAG cannot be performed, how can the issue of posterior capsule opacification

(PCO) be clinically addressed? Additionally, the sponsor was asked to explain why they believe that IMT may inhibit the development of PCO. The sponsor responded to these issues in Amendment #2 as follows:

"The clinical trial report presented a rate of PCO development of 0.5% (1/206) as a complication in Table A46 of the PMA application. This case was graded as mild by the investigator and did not require any interventional strategies… Categorized as slit lamp findings, there were 32 other eyes reported as having PCO most of which were described as minimal (30/32; 93.8%). Of these 32 eyes, two (2) were graded as moderate. At the last available visit, 24 of the 32 eyes did not show any PCO. This indicates that there was significant discrepancy in reporting. This leaves eight (8) eyes remaining with PCO --- 6 were minimal and 2 were considered moderate. In these eight (8) cases, there were no visual sequelae."

FDA asked for clarification as to why 2 eyes with moderate PCO reported as a slit lamp finding were not included with the one case of PCO reported as a complication. This was addressed by the sponsor in a subsequent amendment as follows:

"The reason for inclusion of only this single case as a complication is that the other cases of PCO were not identified by the study investigators as complications on the case report forms, and were therefore tabulated separately based on the slit lamp findings (M4, Volume 2, page 156, Table A24F --- Posterior Capsular Opacification). The case report form for the IMT-002 clinical study provided a grading scale of none, minimal, moderate, or severe for grading of posterior capsule opacification. Based on this grading scale, and FDA's request, the rate of PCO has been revised to include all slit lamp findings of PCO graded as minimal or higher that persisted. Thus, Table 46 (Ocular Complications) has been revised to include the 8 study eyes with PCO (6 minimal and 2 moderate) that were present at the last available visit…"

With regard to the IMT's affect on PCO, the sponsor points to the physical design of the IMT. The sponsor claims that they utilized specific design objectives to minimize the occurrence of PCO. The primary elements included the biocompatibility of the material used, the geometry of the device, its alignment with the capsular bag in order to minimize cell migration, and surgeon related factors. Based on these factors, the IMT was designed using fused silica quartz and a tight radius edge design on the posterior aspect of the IMT which is in contact with the capsular bag. The IMT has a loop configuration and angulation producing wide contact with the capsular bag and keeping it taut and in contact with the tight radius edge posterior window. Additionally, surgeons were trained in implantation of the IMT. Careful cleaning and polishing of the capsular bag, along with meticulous removal of viscoelastic was stressed. Surgeons were also taught not to fire Nd:YAG laser through the optics of the telescope because they would damage it.

With respect to treatment of PCO, should it develop, the sponsor provided the following response:

"YAG capsulotomy has not been performed on any IMT implanted subjects as of the writing of this report. However, the feasibility of performing YAG laser capsulotomy and/or iridectomy has been examined in a rabbit study. YAG capsulotomy was successfully performed in 8 rabbit eyes implanted with the IMT. The results of this study were reported in the Journal of Cataract and Refractive Surgery (2003). The YAG capsulotomy can be performed by focusing the laser beam on the posterior capsule, and aiming and firing the laser through the periphery of the telescope but making sure that the beam does not pass through the optical components of the telescope. The actual procedure for performing the YAG in this manner has been developed. The following method is proposed:

- Maximally dilate the pupil.
- Ensure that there are no adhesions between the pupillary margin of the iris and the telescope apparatus. If adhesions are present, carefully dissect the adhesions with the laser.
- Aim the laser and the posterior capsule and fire the laser around the periphery of the telescope.
- Avoid contact between the laser and optical glass elements of the telescope.
- Do not aim and fire the laser through the optical telescope member of the IMT. (The laser can be aimed through and fired through the PMMA carrier plate and haptics.)
- Needling may be required to complete dislodgement of the membrane from the posterior aspect of the IMT. If needling is utilized, special care should be taken to minimize any force or scratching on the posterior window which could result in damage to the posterior window. Needling may also be used to remove a secondary cataract, either alone or in conjunction with a YAG procedure. "

During the course of the IMT study, needling was utilized in 2 subjects with visually significant PCO. One patient had completed Phase I and the other completed the study through Phase II. The first patient successfully underwent the needling procedure. The second patient who completed the entire 24 month protocol underwent needling with a pars plana approach two months following completion of the study. FDA informed the sponsor that 2 events of needling should have been reported in the original list of adverse events and secondary surgical interventions necessary for management of PCO. The sponsor has revised the Professional Use Information to include a description of cases of visually significant PCO requiring the needling procedure.

The sponsor plans on modifying the patient labeling in the following manner so as to properly inform subjects of the potential for PCO and how it will be managed should it develop:

"A laser may be used to make an opening in the membrane behind the implant, which may improve vision. This laser procedure is usually performed in the office. The procedure takes only a short time and does not require anesthetic. This procedure is

known as YAG capsulotomy. Your physician may decide the cloudy membrane is not suitable for laser treatment and may perform an outpatient surgical procedure using conventional surgical instruments that requires local anesthetic."

During the July 14, 2006 meeting, the Ophthalmic Devices Panel will be asked to discuss the implications of developing of PCO secondary to IMT implantation.

Endothelial Cell Density

The mean decrease in ECD for the total population of study eyes was 25.3% at 1 year which is higher than the target endpoint of ≤ 17%. The mean change from baseline to 3 months was 20.0% (S.D. 21.1%), increasing slightly to 22.4% (S.D. 20.9%) at 6 months and to 24.4% (S.D. 20.5%) at 9 months. The percent change in ECD from baseline to 12 months was 25.3% (S.D. 21.3%), from baseline to 18 months was 25.2% (S.D. 22.2%), and from baseline to 24 months was 28.2% (S.D. 22.5%).

PERCENTAGE CHANGE IN ECD FROM BASELINE (MEAN, SD)
ALL EYES IMPLANTED WITH IMT

ECD % Change from Baseline	3 Months	6 Months	9 Months	12 Months	18 Months	24 Months
N	192	198	190	186	180	144
Mean	-20.0%	-22.4%	-24.4%	-25.3%	-25.2%	-28.2%
Standard Deviation	21.1%	20.9%	20.5%	21.3%	22.2%	22.5%
90% confidence interval for mean	-22.5%, -17.5%	-24.8%, -19.9%	-26.9%, -22.0%	-27.9%, -22.7%	-28.0%, -22.5%	-31.3%, -25.1%
Median	-13.0%	-17.0%	-19.2%	-20.9%	-21.3%	-24.2%
Range	-85.1%, 18.0%	-84.4%, 30.9%	-87.5%, 13.5%	-87.6%, 12.7%	-87.9%, 25.1%	-80.9%, 28.1%
	n (%)	**n (%)**	**n (%)**	**n (%)**	**n (%)**	**n (%)**
Decrease >40%	34 (17.7%)	36 (18.2%)	37 (19.5%)	40 (21.5%)	36 (20.0%)	37 (25.7%)
Decrease 30.01% to 40%	17 (8.9%)	21 (10.6%)	24 (12.6%)	26 (14.0%)	27 (15.0%)	19 (13.2%)
Decrease 20.01% to 30%	25 (13.0%)	28 (14.1%)	31 (16.3%)	30 (16.1%)	30 (16.7%)	28 (19.4%)
Decrease 10.01% to 20%	36 (18.8%)	48 (24.2%)	45 (23.7%)	41 (22.0%)	32 (17.8%)	26 (18.1%)
Decrease 0.01% to 10%	55 (28.6%)	53 (26.8%)	42 (22.1%)	38 (20.4%)	44 (24.4%)	27 (18.8%)
Increase 0.0% to 10%	20 (10.4%)	8 (4.0%)	8 (4.2%)	10 (5.4%)	8 (4.4%)	5 (3.5%)
Increase 10.01% to 20%	5 (2.6%)	3 (1.5%)	3 (1.6%)	1 (0.5%)	2 (1.1%)	1 (0.7%)
Increase 20.01% to 30%	0 (0.0%)	0 (0.0%)	0 (0.0%)	0 (0.0%)	1 (0.6%)	1 (0.7%)
Increase 30.01% to 40%	0 (0.0%)	1 (0.5%)	0 (0.0%)	0 (0.0%)	0 (0.0%)	0 (0.0%)
Increase >40%	0 (0.0%)	0 (0.0%)	0 (0.0%)	0 (0.0%)	0 (0.0%)	0 (0.0%)

N = number of successful IMT implanted eyes returned for the visit with non-missing ECD change from baseline.
Percentage change in ECD from baseline = (postop - baseline) ÷baseline ×100.
% = n ÷N ×100

PERCENTAGE CHANGE IN ECD FROM BASELINE (MEAN, SD)
24-MONTH CONSISTENT COHORT OF EYES IMPLANTED WITH IMT

ECD % Change from Baseline	3 Months	6 Months	9 Months	12 Months	18 Months	24 Months
N	130	130	130	130	130	130
Mean	-19.6%	-22.4%	-24.5%	-26.4%	-25.9%	-28.2%
Standard Deviation	21.5%	21.8%	21.6%	22.2%	23.0%	22.7%
90% confidence interval for mean	-22.7%, -16.5%	-25.6%, -19.2%	-27.6%, -21.3%	-29.6%, -23.1%	-29.2%, -22.5%	-31.5%, -24.9%
Median	-12.4%	-15.8%	-18.9%	-22.2%	-22.0%	-24.2%
Range	-74.9%, 12.8%	-82.5%, 30.9%	-87.5%, 11.6%	-87.4%, 12.7%	-80.5%, 25.1%	-80.9%, 28.1%
	n (%)	**n (%)**	**n (%)**	**n (%)**	**n (%)**	**n (%)**
Decrease >40%	26 (20.0%)	26 (20.0%)	29 (22.3%)	32 (24.6%)	28 (21.5%)	33 (25.4%)
Decrease 30.01% to 40%	9 (6.9%)	13 (10.0%)	11 (8.5%)	16 (12.3%)	21 (16.2%)	17 (13.1%)
Decrease 20.01% to 30%	13 (10.0%)	17 (13.1%)	20 (15.4%)	24 (18.5%)	21 (16.2%)	26 (20.0%)
Decrease 10.01% to 20%	25 (19.2%)	30 (23.1%)	30 (23.1%)	23 (17.7%)	19 (14.6%)	24 (18.5%)
Decrease 0.01% to 10%	37 (28.5%)	34 (26.2%)	32 (24.6%)	26 (20.0%)	30 (23.1%)	23 (17.7%)
Increase 0.0% to 10%	16 (12.3%)	6 (4.6%)	6 (4.6%)	8 (6.2%)	8 (6.2%)	5 (3.8%)
Increase 10.01% to 20%	4 (3.1%)	3 (2.3%)	2 (1.5%)	1 (0.8%)	2 (1.5%)	1 (0.8%)
Increase 20.01% to 30%	0 (0.0%)	0 (0.0%)	0 (0.0%)	0 (0.0%)	1 (0.8%)	1 (0.8%)
Increase 30.01% to 40%	0 (0.0%)	1 (0.8%)	0 (0.0%)	0 (0.0%)	0 (0.0%)	0 (0.0%)
Increase >40%	0 (0.0%)	0 (0.0%)	0 (0.0%)	0 (0.0%)	0 (0.0%)	0 (0.0%)

N = number of successful IMT implanted eyes with ECD change from baseline at all visits.
Percentage change in ECD from baseline = (postop - baseline) ÷baseline ×100.
% = n ÷N ×100

Corneal edema at Day 1 postop, and surgical order/experience were identified as major factors that appeared to be associated with the immediate postoperative ECD losses. These analyses in the original submission prompted further statistical investigation. FDA requested more sophisticated analysis from the sponsor. See the Statistics section on endothelial cell loss (§6.d & e) for a more complete discussion of factors that were related to cell loss.

ECD loss increased substantially with increasing corneal edema on postoperative day 1; based on the ANOVA (analysis of variance) this observation proved to be statistically significant at 3 months ($p<0.0001$), 6 months ($p<0.0001$), and 9 months ($p=0.0001$). Group wise comparisons also showed a statistical difference in normal vs. 2+ edema, and 1+ edema vs. 2+ edema at 3, 6 and 9 months.

Stratification of ECD by incision type was also performed, by comparing mean ECD following limbal insertion to scleral tunneling. While no statistically significant differences were found, reduction in ECD was lower in eyes with limbal incisions at 9 months. Interestingly, anecdotal comments have been made by a number of the study surgeons that limbal incisions may be safer and less traumatic to the corneal endothelium, since less manipulation of the endothelium is likely to occur due to the geometry of the incision. Incision size was also stratified into two groups --- <12mm and ≥12mm. In this analysis (incision size) significance was demonstrated at 3, 6 and 9 months postop ($p<.0442$, 0.0417, 0.0499 respectively). The larger incision sizes produced greater losses from baseline as compared to smaller incision sizes (<12mm).

Comparison of mean changes in ECD from baseline stratified by ACD reveals a clinically significant trend for all post-op intervals. In the table below, constructed by FDA, eyes with ACDs of >3.5mm as compared to eyes with less than 3.0mm have clinically significant less ECD loss (from 3.8% to 7.7%). Eyes with ACDs >3.0mm - 3.50mm showed clinically significant less ECD loss as compared to ACDs of ≤3.0 mm (ranging from 2.0% to 6.3% with the exception of 18 months, where the difference was only 0.6%).

Postop Interval	**Anterior Chamber Depth**		
	≤3.00mm **Mean ECD loss (SD)** *90% C.I.*	**>3.00-3.50mm** **Difference in Mean ECD loss**	**>3.50mm** **Difference in Mean ECD loss**
3 months	-22.1% (21.9%) -26.2%, -18.1%	**2.8% less ECD loss**	**5.2% less ECD loss**
6 months	-26.3% (22.9%) -30.5%, -22.0%	**6.3% less ECD loss**	**7.5% less ECD loss**
12 months	-26.1% (21.6%) -30.2%, -22.0%	**2.0% less ECD loss**	**5.0 less ECD loss**
18 months	-27.0% (24.0%) -30.6%, -21.1%	**0.6% less ECD loss**	**3.8% less ECD loss**
24 months	-31.7% (25.5%) -37.5%, -25.8%	**2.5% less ECD loss**	**7.7% less ECD loss**

In the April 26th Amendment (p. 29), the sponsor provided a regression analysis modeling percent ECD loss as a function of ACD. The relationship between ACD and ECD loss was found to be highly significant.

The major safety concern is the ongoing loss of ECD and its impact on the corneal integrity and subsequently, the vision of those implanted with the IMT. Those results are presented in Section 6, Statistics.

Due to the potential corneal decompensation, ECD < 1,000 cells/mm^2 was of a particular concern to FDA. Sponsor reported ECD < 1,000 cells/mm^2 in a total of 29 IMT-implanted eyes at any postoperative visit (Table 27 of August 2005 submission below), with 18 eyes having this ECD at 24 months.. The majority of eyes with ECD < 1000 cells/mm^2 (65.5% or 19/29) had Day 1 edema of grade 2+ or more, as compared to only 18.6% (33/177) of eyes with ECD greater than 1,000 cells/mm.^{2}

ENDOTHELIAL CELL DENSITY (MEAN, SD)
ALL EYES IMPLANTED WITH IMT

ECD	Preop	3 Months	6 Months	9 Months	12 Months	18 Months	24 Months
N	206	192	198	190	186	180	144
Mean	2496.13	1996.87	1936.83	1890.82	1871.29	1878.11	1786.36
Standard Deviation	354.33	585.92	579.73	572.29	592.09	618.22	602.61
Median	2510.0	2026.3	2017.8	1938.8	1929.5	1977.5	1860.0
Range	1695.0, 3356.0	432.3, 3125.7	385.3, 2935.7	309.0, 3008.0	310.7, 2959.0	351.0, 2900.0	385.7, 2930.0
	n (%)	**n (%)**	**n (%)**	**n (%)**	**n (%)**	**n (%)**	**n (%)**
≥3000	13 (6.3%)	1 (0.5%)	0 (0.0%)	1 (0.5%)	0 (0.0%)	0 (0.0%)	0 (0.0%)
2500 to <3000	92 (44.7%)	44 (22.9%)	35 (17.7%)	27 (14.2%)	29 (15.6%)	31 (17.2%)	17 (11.8%)
2000 to <2500	80 (38.8%)	55 (28.6%)	66 (33.3%)	61 (32.1%)	56 (30.1%)	57 (31.7%)	43 (29.9%)
1500 to <2000	21 (10.2%)	59 (30.7%)	56 (28.3%)	59 (31.1%)	57 (30.6%)	46 (25.6%)	46 (31.9%)
1000 to <1500	0 (0.0%)	17 (8.9%)	24 (12.1%)	26 (13.7%)	23 (12.4%)	25 (13.9%)	20 (13.9%)
<1000	0 (0.0%)	16 (8.3%)	17 (8.6%)	16 (8.4%)	21 (11.3%)	21 (11.7%)	18(12.5%)
95% CI for % of eyes with ECD<1000	0.0%, 1.8%	4.8%, 13.2%	5.1%, 13.4%	4.9%, 13.3%	7.1%, 16.7%	7.4%, 17.3%	7.6%, 19.0%

N = number of successful IMT implanted eyes returned for the visit with non-missing ECD.
% = n ÷N ×100
95% CI was calculated based on Clopper Pearson method.

During the July 14, 2006 meeting, the Ophthalmic Devices Panel will be asked to discuss the impact of ECD losses on the demonstration of the safety of IMT device in the intended population.

xi. Postoperative Vision Rehabilitation

The sponsor's goals for the vision rehabilitation program were to facilitate adjustment to the IMT expeditiously while optimizing function. Traditionally, the professionals direct the rehabilitation. In the IMT trial, the patient was responsible for implementing the rehabilitation program with assistance from the family. The family verified that training was performed and that the home environment (lighting and contrast) was modified to optimize rehabilitation. No validated methods of measuring the outcome of training were utilized in this trial to verify subjects' improvement in their ability to function at home, work, and elsewhere. Therefore, there is no reliable evidence that the vision rehabilitation program as designed and implemented by the sponsor has had any improvement on functional visual performance for subjects in the IMT clinical trial. FDA believes that an effective postoperative rehabilitation program should be focused upon the patient's targeted related to visual function.

The sponsor's training program did not include the use of any of the following professionals to conduct baseline functional abilities: rehabilitation teachers; occupational therapists; rehabilitation counselors; social workers and orientation and mobility specialists. FDA informed the sponsor that state associations and other agencies for the blind and visually impaired are located in almost every state and are resources for providing rehabilitation services. The sponsor believes that there is

limited availability of rehabilitation professionals and that physicians may not be able to comply should labeling require Vision Rehabilitation by professionals. The sponsor, however, does agree that the benefits of the IMT may be maximized by training and has proposed the following labeling: "Low vision rehabilitation services are recommended to maximize the potential for successful use of the IMT."

FDA is concerned about patient adaptation to the increased magnification and the potential associated proprioceptive changes. These effects are known to alter judgment of localization of objects in the visual space, the ability to walk, negotiate curbs and steps, and to read. Therefore, FDA recommended that the labeling should specify that professional vision rehabilitation services should include orientation and mobility as well as reading training.

During the July 14, 2006 meeting, the Ophthalmic Devices Panel will be asked to consider a vision training rehabilitation program as a requirement for IMT implantation.

5. VISION SCIENCE

a. Visual acuity criterion for success

Two IMT versions were implanted: a 2.2-power device that expands the central 24° of field to 54.8° on the retina; a 2.7-power device that expands the central 20° of field to 54° on the retina. These nominal magnification factors predict respective visual acuity improvements of 3.4 lines (0.34 logMAR), and 4.3 lines (0.43 logMAR) from optical considerations alone. In response to FDA's deficiency, the sponsor argued that less than the theoretical improvement should be expected clinically because of the reduced central vision in the study subjects. However, they also provided the following table showing that about 50% of IMT eyes achieved at least the predicted improvement, consistent with the optical magnification.

Table Q17
Improvement of BCDVA or BCNVA of at Least 3.4 Lines for 2.2X Model and Improvement of BCDVA or BCNVA of at Least 4.3 Lines for 3.0X Model
All Eyes Implanted with IMT

	1 Month n/N %	3 Months n/N %	6 Months n/N %	9 Months n/N %	12 Months n/N %	18 Months n/N %	24 Months n/N %
WA 2.2 X, Improved at least 3.4 lines							
BCDVA	29/114 25.4%	48/112 42.9%	50/112 44.6%	50/108 46.3%	57/110 51.8%	48/100 48.0%	37/ 82 45.1%
BCNVA	26/112 23.2%	43/112 38.4%	44/112 39.3%	45/108 41.7%	47/109 43.1%	41/100 41.0%	38/ 82 46.3%
BCDVA or BCNVA	44/114 38.6%	64/112 57.1%	65/112 58.0%	66/108 61.1%	72/110 65.5%	59/100 59.0%	50/ 82 61.0%
WA 3.0 X, Improved at least 4.3 lines							
BCDVA	17/ 91 18.7%	36/ 89 40.4%	38/ 90 42.2%	36/ 88 40.9%	42/ 83 50.6%	35/ 79 44.3%	23/ 65 35.4%
BCNVA	10/ 90 11.1%	22/ 89 24.7%	23/ 90 25.6%	26/ 88 29.5%	24/ 83 28.9%	21/ 79 26.6%	21/ 65 32.3%
BCDVA or BCNVA	23/ 91 25.3%	43/ 89 48.3%	48/ 90 53.3%	48/ 88 54.5%	49/ 83 59.0%	42/ 79 53.2%	31/ 65 47.7%

N = number of treated eyes returned for the visit with a non-missing VA change. % = n ÷N ×100.

The sponsor has proposed safety and effectiveness criteria for visual acuity that are based on the unadjusted preoperative acuity rather than on the acuity predicted from the magnified postoperative retinal image.

During the July 14, 2006 meeting, the Ophthalmic Devices Panel will be asked to consider this question:

- Is preoperative acuity acceptable as a baseline for safety and effectiveness evaluations of acuity, or should an adjusted baseline be used that takes into account the magnification of the retinal image?

b. Binocular visual performance considerations

The IMT was implanted in only one eye of each patient, ostensibly to provide expanded central vision in the implanted eye while allowing normal peripheral vision in the fellow eye. This configuration produces discordant visual input to the two eyes, e.g.: (a) extreme retinal image size differences; (b) unequal image motion from consensual eye movements; (c) permanent loss of patterned input to the peripheral retina of the implanted eye; and (d) permanent limitation of the binocular visual field. Such differences in binocular input are typically related to pronounced binocular rivalry and suppression effects.

The sponsor's strategy to mitigate problems with binocular rivalry, suppression, and magnification differences has been to recommend a self- and family-administered training program in which the subject is supposed to learn to suppress conflicting information in the implanted eye during orientation and mobility tasks, and to suppress conflicting information in the fellow eye during central vision tasks. This strategy depends critically on the assumption that subjects can learn to suppress either eye at will. The sponsor has provided no validation data to show how well IMT subjects learn to control suppression, either by direct measurements or by explicit questions, but argues instead that positive responses to general questionnaires and the lack of spontaneous reports of binocular problems adequately demonstrate the success of the training procedure.

During the July 14, 2006 meeting, the Ophthalmic Devices Panel will be asked to consider these questions:

- Are additional data and analyses needed to assess IMT subjects' ability to use their implanted eye for central vision tasks and their fellow eye for peripheral vision tasks?

6. STATISTICS

VisionCare conducted a prospective multi-center clinical trial IMT-002 under IDE G000115, in which a total of 218 consecutive subjects were enrolled and 206 subjects were implanted at 28 clinical sites and followed at 1 day, 1 week, 1 month, 3 months, 6 months, 9 months, 12 months, 18 months and 24 months postoperatively. Of the 206 eyes, 115 eyes were implanted with 2.2xWA and 91 eyes were implanted with the 3.0x WA device.

a. **Patient Accountability**

Sponsor's analysis for accountability is defined as the ratio of the number of subjects available for analysis to the number of total enrolled eyes minus discontinued and non-eligible. The result is listed below for each month;

1 month	206/206	=	100%
3 months	201/203	=	99%
6 months	202/202	=	100%
9 months	196/201	=	97.5%
12 months	194/197	=	98.5%
18 months	180/196	=	91.8%
24 months	148/155	=	95.5%.

The sponsor also provided a dataset for both IMT eyes and fellow eyes which have ECD measurements overtime. The accountability of ECD measurements is summarized by the FDA and shown on Figure 1.

FDA Figure 1. Subjects with ECD measurements in Study IMT-002

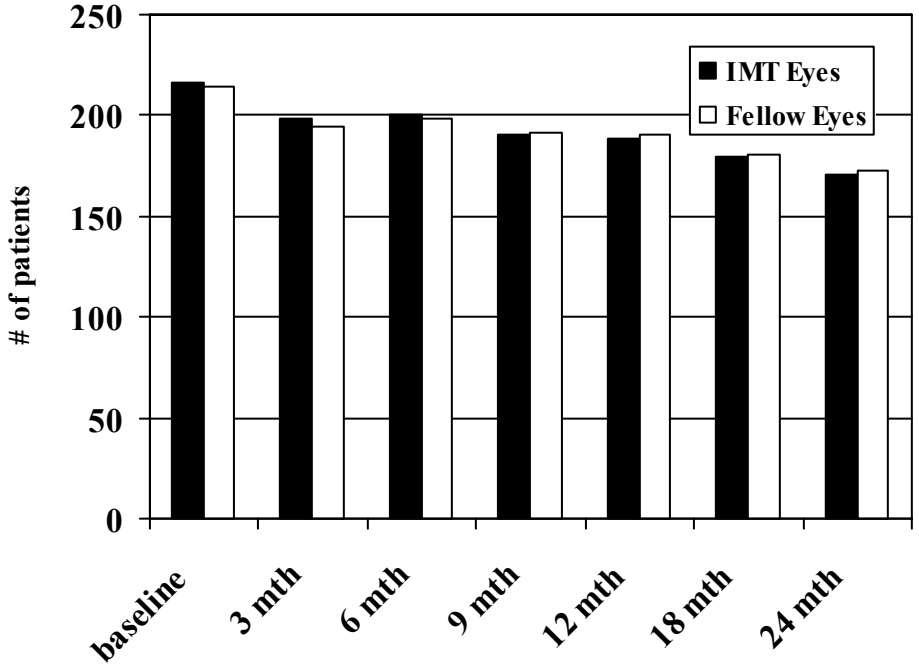

b. **Primary Effectiveness Endpoint**

Based on the sponsor's table (Table 9-4, Page 32, Volume I) titled "Summary of effectiveness and safety endpoints in visual acuity for all AMD device implanted eyes", the overall success ≥ 2 lines gain in BCDVA, was achieved by 89.1% of eyes at 6 months, by 89.7% at 9 months, 90.1% at 12 months, 87.2% at 18 months and 85.7% at 24 months.

The p-value from the Exact test for the null hypothesis (success rate ≤50%) was < 0.001 at each time point, indicating that the success rate is statistically significantly better than 50%. It indicates that the result significantly surpassed the effectiveness endpoint criterion defined in the protocol.

c. **Primary Safety Endpoint**

The rates of subjects who experienced a loss of more than 2 lines in either near or distance BCVA without a corresponding improvement [gain of 2 or more lines] in the other BCVA), for 6 months, 9 months, 12 months, 18 months and 24 months are 4.5%, 4.6%, 5.2%, 4.5% and 6.1%, respectively. All of these rates are less than the 10% as defined in the protocol.

The p-value from the Exact test for the null hypothesis (safety rate ≥ 10%) was less than 0.05 at the 6, 9, 12 and 18 month follow-up visits, but equal to 0.0696 at the 24 month visit.

The sponsor's results for effectiveness and safety are summarized in Table 9-4 of the submission as follow:

TABLE 9-4
SUMMARY OF EFFECTIVENESS AND SAFETY ENDPOINTS IN VISUAL ACUITY
ALL AMD DEVICE IMPLANTED EYES

BCVA Endpoints	6 Months n (%) % CI	9 Months n (%) % CI	12 Months n (%) % CI	18 Months n (%) % CI	24 Months n (%) % CI
Effectiveness (N=)	201	195	192	179	147
Overall Effectiveness Endpoint (Success Rate) ≥2 lines gain of BCDVA or BCNVA*	*179 (89.1%) 84.7%, 92.5%*	*175 (89.7%) 85.4%, 93.1%*	*173 (90.1%) 85.8%, 93.4%*	*156 (87.2%) 82.3%, 91.1%*	*126 (85.7%) 80.1%, 90.2%*
Binomial exact p-value for Ha: success rate > 50%	*<.0001*	*<.0001*	*<.0001*	*<.0001*	*<.0001*
≥2 lines gain of BCDVA and BCNVA*	138 (68.7%) 62.8%, 74.1%	134 (68.7%) 62.8%, 74.2%	141 (73.4%) 67.7%, 78.6%	127 (70.9%) 64.9%, 76.5%	99 (67.3%) 60.4%, 73.7%
Not reported/IMT removal	1	1	2	1	1
Total	202	196	194	180	148
Safety (N=)	201	195	193	179	147
Overall Safety Rate >2 lines loss of BCDVA and no change/loss of BCNVA or >2 lines loss of BCNVA and no change/loss of BCDVA†	*9 (4.5%) 2.4%, 7.7%*	*9 (4.6%) 2.4%, 7.9%*	*10 (5.2%) 2.8%, 8.6%*	*8 (4.5%) 2.2%, 7.9%*	*9 (6.1%) 3.2%, 10.4%*
Binomial exact p-value for Ha: safety rate < 10%	*0.0033*	*0.0048*	*0.0120*	*0.0055*	*0.0696*
>2 lines loss of BCDVA and BCNVA‡	2 (1.0%) 0.2%, 3.1%	4 (2.1%) 0.7%, 4.6%	2 (1.0%) 0.2%, 3.2%	2 (1.1%) 0.2%, 3.5%	2 (1.4%) 0.2%, 4.2%
>2 lines loss of BCDVA and no change in BCNVA§	1 (0.5%) 0.0%, 2.3%	2 (1.0%) 0.2%, 3.2%	1 (0.5%) 0.0%, 2.4%	1 (0.6%) 0.0%, 2.6%	0 (0.0%) 0.0%, 2.0%
>2 lines loss of BCNVA and no change of BCDVA§	6 (3.0%) 1.3%, 5.8%	3 (1.5%) 0.4%, 3.9%	7 (3.6%) 1.7%, 6.7%	5 (2.8%) 1.1%, 5.8%	7 (4.8%) 2.3%, 8.8%
Not reported/IMT removal	1	1	1	1	1
Total	202	196	194	180	148

For effectiveness, N = number of records with non-missing BCDVA and BCNVA changes from preop. The records with BCDVA gain ≥2 lines and BCNVA missing and the records with BCNVA gain ≥2 lines and BCDVA missing were counted as successful events.
For safety, N = number of records with non-missing BCDVA and BCNVA changes from preop. The records with BCDVA loss > 2 lines and BCNVA missing and the records with BCNVA loss > 2 lines and BCDVA missing were counted as safety events.
Not reported = number of records with missing BCDVA and/or BCNVA changes from preop.
IMT removal = number of treated eyes with IMT removal at the visit. Records after IMT removal were excluded and reported separately.
Total = number of treated eyes that returned for the visit.
% = n ÷N x100. %CI = 90% confidence interval for %. It was calculated based on Clopper Pearson method.

* BCNVA gain ≥2 lines means that either BCNVA at 8" or BCNVA at 16" gained ≥2 lines.

† No gain in BCNVA means that both BCNVA at 8" and BCNVA at 16" did not gain ≥2 lines. No gain in BCDVA means that BCDVA did not gain ≥2 lines.

‡ >2 lines loss in BCNVA means that one BCNVA (8" or 16" lost > 2 lines without the other BCNVA (8" or 16") gaining ≥2 lines.

§ No change = within a loss of 2 lines to a gain of <2 lines. For BCNVA, it means that both BCNVA at 8" and BCNVA at 16" are within a loss of 2 lines to a gain of <2 lines.

d. **Endothelial Cell Density**

The sponsor provided a series of descriptive statistics for ECD loss in the PMA and subsequent amendments. The results showed that ECD percentage has changed drastically from baseline to 12 months (a 25% decrease) and from baseline to 24 months (a 28.4% decreases) after IMT implantation. In addition, ECD changes from 3 month to 18 month ($p<0.0001$) and from 6 month to 18 month ($p=0.0012$) are statistically significant using a GEE model based comparison. In terms of annual loss, by using 3-24 months data, the annual loss rate is 5.4% with a 95% CI (2%, 8.8%).

The FDA review team requested the sponsor provide some additional analyses on ECD loss after reviewing the PMA submission. The sponsor submitted an amendment on April 25, 2006 to respond to the request. FDA's review of the key statistical issues is provided below:

i. ECD loss from baseline to 3, 12, 18 and 24 months

The percentiles of ECD percentage change from baseline to 3, 12, 18 and 24 months were computed in the reviewer's Table 1. Data were presented for the following groups: IMT eyes, all fellow eyes, fellow eyes pseudo-phakic or phakic eyes. It is noticed that for the IMT eyes at each time point, the percentiles of ECD percentage change is constantly larger than that of the fellow eyes, or pseudophakic or phakic fellow eyes.

FDA Table 1. ECD% Change from Baseline

Change from baseline	3 months	12 months	18 months	24 months
IMT Eyes				
N	193	186	180	171
Worst 5% pts	-66.82%	-68.85%	-74.15%	-74.55%
Worst 10% pts	-51.97%	-57.72%	-59.55%	-58.92%
Median (50th percentile)	-13.50%	-20.90%	-21.32%	-24.00%
All fellow Eyes				
N	189	186	179	171
Worst 5%	-10.07%	-16.31%	-19.49%	-28.48%
Worst 10%	-7.53%	-10.56%	-12.27%	-15.65%
Median (50th percentile)	-0.63%	-1.31%	-1.17%	-2.70%
Pseudophakic Fellow Eyes				
N	33	34	33	30
Worst 5%	-17.65%	-33.78%	-28.75%	-33.03%
Worst 10%	-5.09%	-16.31%	-17.42%	-15.17%

Change from baseline	3 months	12 months	18 months	24 months
Median (50th percentile)	-2.66%	-5.53%	-3.41%	-4.88%
Phakic Fellow Eyes				
N	156	152	146	141
Worst 5%	-9.58%	-13.10%	-13.71%	-26.12%
Worst 10%	-4.48%	-5.15%	-6.47%	-6.39%
Median (50th percentile)	-0.29%	-0.69%	-0.78%	-2.11%

ii. Modeling ECD loss over time

The sponsor provided a mixed model to analyze chronic ECD loss from 3 to 24 months, from 6 to 24 months, and from 9 to 24 months, respectively. ACD and surgeon experience (surgical order) were included as covariates in the models. The results based on these analyses demonstrated that:

- Chronic ECD loss (from 3-24 months, or 6-24 months, or 9-24 months) is statistically significant ($p<0.001$).
- For those who underwent surgery by less experienced surgeon (surgical order $\leq 3^{rd}$), subjects with pre-operative ACD $\leq$ 3.00 mm had more ECD loss than subjects with pre-operative ACD > 3.0 mm. This effect was not found for subjects in group of surgical order $\geq 4^{th}$.

There is a statistically significant difference in ECD loss between the IMT-implanted eyes and phakic fellow eyes ($p=0.0003$ for 3 to 24 months, $p=0.0132$ for 6 to 24 months and $p=0.186$ for 9 to 24 months). The comparison between the IMT-implanted eyes and the pseudophakic fellow eyes did not show statistically significant differences ($p>0.05$ for all time interval comparisons). However, there are a very limited number of subjects with pseudophakic eyes.

The sponsor also provided prediction results based on their statistical model. The results showed that at 24 months, 20 subjects had ECD less than 1000.

Sponsor's Table: Percentage of subjects with predicted ECD ≤ 1000 for IMT eyes

Baseline Group		3-24 months	6-24 moths	9-24 months
At 2 years	**ECD < Q1**	23 (45.1%)	20 (40.8%)	20 (40.0%)
	ECD in Q1 ~ median	0 (0.0%)	0 (0.0%)	0 (0.0%)
	ECD in Median ~ Q3	0 (0.0%)	0 (0.0%)	0 (0.0%)
	ECD > Q3	0 (0.0%)	0 (0.0%)	0 (0.0%)
	ECD < Q1	28 (54.9%)	25 (51.0%)	24 (48.0%)

Baseline Group		3-24 months	6-24 moths	9-24 months
3 years	ECD in Q1 ~ median	1 (2.0%)	0 (0.0%)	0 (0.0%)
	ECD in Median ~ Q3	0 (0.0%)	0 (0.0%)	0 (0.0%)
	ECD > Q3	0 (0.0%)	0 (0.0%)	0 (0.0%)
4 years	ECD < Q1	33 (64.7%)	27 (55.1%)	28 (56.0%)
	ECD in Q1 ~ median	3 (6.0%)	0 (0.0%)	0 (0.0%)
	ECD in Median ~ Q3	1 (2.0%)	0 (0.0%)	1 (0.0%)
	ECD > Q3	0 (0.0%)	0 (0.0%)	0 (0.0%)

Note: 3-month groups were based on the quartiles of the predicted 3-month ECD values; 6-month groups were based on the quartiles of the predicted 6-month ECD values; 9-month groups were based on the quartiles of the predicted 9-month ECD values.

However, the sponsor's analyses have the follow limitations:

- Analyses on ECD change over time have excluded all baseline ECD values. This exclusion affects the evaluation of the impact of baseline ECD on the total ECD loss.
- Separate analyses on different study periods such as baseline to 3 months and 3 months to 24 months ignore the association (correlation) of these periods. The sponsor had run separate models on operated eyes and fellow eyes.
- There are variations in actual follow-up times vs. nominal visits specified by the study protocol. Actual visit time is preferable in the model to the use of the nominal visit time.

iii. FDA's analyses

In the FDA analysis, all ECD data was included in one model to fully evaluate ECD change over the study period. A mixed effect model was fitted to analyze the ECD data. Using this model, we were able to estimate the rate of ECD change in acute and chronic periods separately. The rates of ECD change between IMT eyes and fellow eyes in different periods can be also compared.

The plots below (Figure 2) describe ECD observations of each subject at each follow-up visit. The left panel is for IMT eyes and the right for fellow eyes.

FDA Figure 2: Observed ECDs for All Eyes

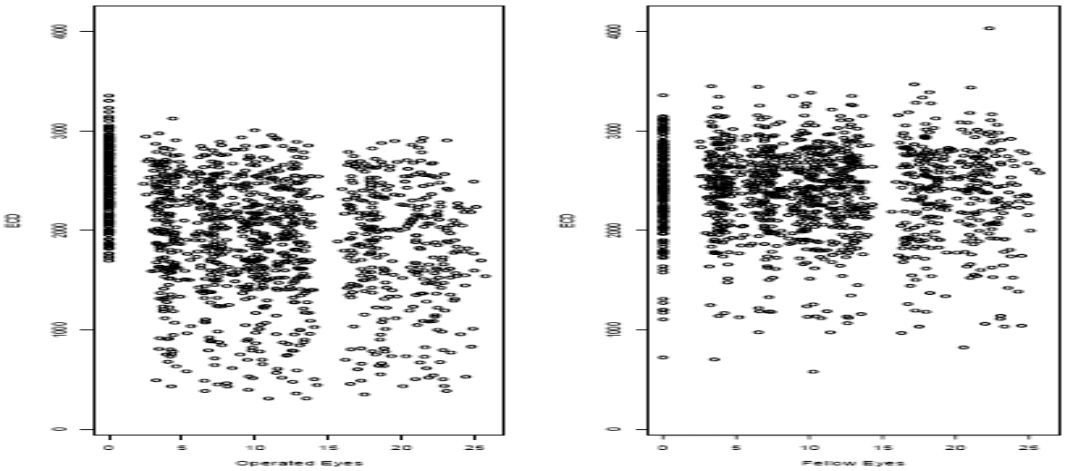

Using a mixed effect model similar to the sponsor's but including the baseline to 3 month data, and assuming two piecewise linear trend in ECD from baseline to 3 months and from 3 to 24 months for both IMT and fellow eyes, we have the fitted model as in Figure 3.

FDA Figure 3: Fitted Model

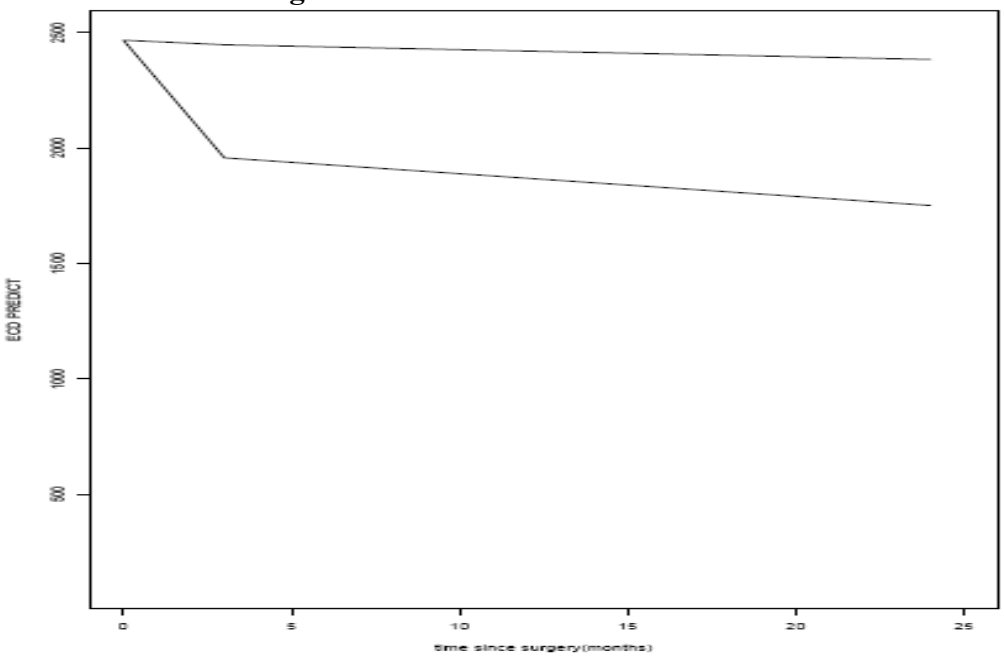

FDA Table 2. Results of Fitted ECD Model

	Estimate	Estimate	Standard Error	2-sided p-value
Operated Eyes	Intercept	2466.89	19.75	<0.0001
	Acute monthly change	-169.81	14.28	<0.0001
	Chronic monthly change	-9.83	1.38	<0.0001
Fellow Eyes	Acute monthly change	-6.59	4.61	0.1532
	Chronic monthly change	-3.03	1.05	0.0039

For the group of IMT eyes, there is a significant monthly decrease of 170 cells in ECD from baseline to 3 months (p<0.0001, Table 2). And ECD continues to decrease by 9.83 cells per month (p<0.0001, Table 2).

FDA Table 3. Comparison of ECD change rates

	2-sided p-value
Acute ECD slopes between Operated & Fellow eyes	<0.0001
Chronic ECD slopes between Operated & Fellow eyes	<0.0001
Operated eyes: acute vs. chronic	<0.0001
Fellow eyes: acute vs. chronic	0.4863

By comparing the rates of ECD change between IMT and fellow eyes (Table 3), it is found that:

- For the group of IMT eyes, rate of acute ECD loss (0-3 months) and rate of chronic ECD loss (3-24 months) are statistically significantly different (P<0.0001). However, for the fellow eyes, there is no statistically significant difference between the two periods (p=0.4863).
- During the acute period (baseline to 3 months), rates of ECD loss are significantly different between IMT and fellow eyes (p<0.0001).
- During the chronic period (3 to 24 months), rates of ECD are still significantly different between IMT and fellow eyes.

The FDA understands that it is always a questionable exercise to extrapolate beyond the range of available data and the prediction results are highly dependent on the model and assumptions. However, some type of extrapolation is necessary to weigh long-term effects. For this purpose, based on the estimates from the

fitted model, Table 4 summarizes the estimated number and percentage of subjects with predicted ECD ≤ 1000 at the end of year 2, 3 and 4.

FDA Table 4: Percentage of subjects with predicted ECD ≤ 1000

Group		Operated eyes (n=216)	Fellow eyes (n=216)
2 years	Overall	24/216 (11.1%)	1/216 (0.5%)
	Baseline ECD < Q1	11/54 (20.4%)	1/54 (1.9%)
	Baseline ECD in Q1 ~ median	4/54 (7.4%)	0
	Baseline ECD in Median ~ Q3	5/54 (9.3%)	0
	Baseline ECD > Q3	4/54 (7.4%)	0
3 years	Overall	38/216 (17.6%)	2/216 (0.9%)
	Baseline ECD < Q1	17/54 (31.5%)	2/54 (3.7%)
	Baseline ECD in Q1 ~ median	8/54 (14.8%)	0
	Baseline ECD in Median ~ Q3	9/54 (16.7%)	0
	Baseline ECD > Q3	4/54 (7.4%)	0
4 years	Overall	49/216 (22.7%)	3/216 (1.4%)
	Baseline ECD < Q1	21/54 (38.9%)	2/54 (3.7%)
	Baseline ECD in Q1 ~ median	12/54 (22.2%)	0
	Baseline ECD in Median ~ Q3	11/54 (20.4%)	1/53 (1.9%)
	Baseline ECD > Q3	5/54 (9.3%)	0

Note: The groups are based on baseline ECD quartiles of IMT and fellow eye groups.

By the end of the study (24 months), 11.1% of the IMT eyes would have ECD ≤ 1000; while the proportion in the fellow eye group would be 0.5%.

Analyses indicate that ECD experienced a drastic decrease from baseline to 3 months. Both the sponsor's and FDA's models found that chronic ECD loss from 3 to 24 months was also significant. It was found that by the end of the study (24 months), some IMT eyes had ECD lower than 1000. This is especially true for those with the worst ECD at baseline (>20%).

e. **Evaluation of the Effect of Anterior Chamber Depth (ACD) on ECD loss**

The sponsor provided a set of regression analyses using ECD percent changes from baseline to 3 months, 3 to 24 months, baseline to 24 months, 6 to 24 months and 9 to 24 months as dependent variables, separately. Independent variables included ACD, surgical order (<=3rd case and >= 4th case) and the interaction of ACD*surgical order. The results

showed that ACD had a linear effect on ECD percentage change from baseline to 3 months for the surgical order group of <= 3rd case (p=0.0081), but not for the surgical order group of >= 4th case (the interaction of ACD*surgical order was not statistically significant). Similar results were observed when ECD percentage change from baseline to 24 months was used as dependent variable (p=0.0304).

f. **Quality of Life**

Trained interviewers, who were not masked, administered the NEI-VFQ to each patient. Subjects were interviewed at baseline, 3 months, 6 months, 12 months and 24 months after enrollment. The NEI-VFQ was designed to be applicable to subjects with a number of different vision-limiting or vision threatening conditions. The results of the quality of life (QoL) analyses showed that the IMT may improve both vision and related QoL scores. The mean change in the general vision subscale at 12 months was 14.1 point improvement with a 95% confidence interval (CI) of 11.0-17.2. The overall composite score change at 12 months was 6.0 points with a 95% CI of 4.0-8.1.

7. POST-APPROVAL STUDIES

The epidemiology review of the VisionCare's PMA submission recommended that if the IMT is approved, a post-approval study should be conducted as a condition of approval for this first-of-a-kind device. The reviewer further recommended that the post market plan include the following two study components:

- continued follow-up of the pre-market clinical study cohort; and
- rigorous follow-up of patients who are implanted with the IMT after approval to address the deficiencies and concerns related to the safety and effectiveness of long-term use of the IMT.

The two post-approval study protocols should address the following elements: objectives, groups and outcomes of interest, study design, study size and representativeness, analysis plan, data collection and validation, patient follow-up, and reporting requirements (interim and final reports).

VisionCare's latest post-market plan is consistent with FDA's recommendations in proposing two follow-up studies of patients.

a. **Continued Follow-up of the Pre-market Clinical Study Cohort**

This continued follow-up study, already in progress, is a one arm, prospective, multi-center clinical study that will provide 3 additional years of follow-up of the 178 patients who participated in the 24-month pivotal study and who were also present at the 24-month follow-up visit. In the evaluation of ECD changes, fellow eyes serve as controls for the IMT implanted eyes. Study participants will be re-consented and examined at the

entry in the continued follow-up study and at months 30, 36, 42, 48, 54 and 60 post-implantation. Selected clinical parameters evaluated in the pivotal study will be evaluated at each visit, including best corrected distance acuity, intraocular pressure, slit lamp examination and specular microscopy, device failures, complications and adverse events. Quality of life will not be evaluated. Objectives of the continued follow-up study of the pivotal study cohort are:

- to determine whether the improvements in visual acuity achieved during the first 24 months of follow-up are sustained through the fifth post operative year, and
- whether there is a reasonable assurance that the effects of IMT implantation and chronic ECD loss do not result in decreases in ECD that fall below the threshold where corneal function is irreversibly compromised.

The sponsor's proposed study does not fully address the following issues:

- Omission of safety and effectiveness endpoints, criteria for success, and testable hypotheses.
- Whether the continued follow-up study has sufficient statistical power to assess long-term effects of IMT on ECD changes that would be clinically significant.
- Whether the ECD data generated by the continued follow-up will provide sufficient assurances about the long-term effects of IMT implantation on ECD under conditions of general use
- Definition of long-term effectiveness outcome in terms of BCDVA, and not in terms of both BCDVA and BCNVA (as defined in the PMA study).
- Use of inappropriate statistical techniques that neither account for the high correlation among repeated measures of ECD in the IMT implanted eye over time nor the high correlation between the IMT implanted eye and the fellow eye in analyses of ECD loss.

b. **Follow-up Patients Receiving the IMT Post Approval**

The second post approval study is designed to characterize the safety and effectiveness of the IMT among the first 500 consecutive patients who receive the IMT after marketing approval (if approved) by following them through the fifth postoperative year. Follow-up of this larger, more diverse patient population will allow the detection of rare and late occurring adverse events. Study participants will be examined at the study entry, day 1, week 1, month 1, 6, 12, 24, 36, 48, and 60. Telephone interviews of all study participants will be conducted at 6 month intervals between annual clinical examinations. The proposed post approval studies differ from the PMA clinical trial in two important ways. First, the sponsor proposes to omit the months 3 and 9 examinations, time points at which the sponsor reported significant changes in ECD. Second, the sponsor proposed not to perform the specular microscopy to assess ECD in the post approval study of new IMT recipients. This would be a serious omission given the concerns about the ECD loss associated with IMT implantation and the failure of the pivotal study to meet the pre-specified protocol criterion for safety (≤ 17% ECD loss at one year). There are no plans

to evaluate the effectiveness of the post implantation visual rehabilitation training designed to help patients with IMT implants to adjust to the IMT.

The sponsor's proposed study does not fully address the following issues:

- Omission of criteria for success for safety endpoints, and of a testable hypotheses for ECD changes
- Omission of study size calculations based on the ability to assess effects of IMT on ECD changes that would be clinically significant (as defined in the PMA study).
- Definition of long-term effectiveness outcome in terms of BCDVA, and not in terms of both BCDVA and BCNVA (as defined in the PMA study).
- Use of inappropriate statistical techniques that neither account for the high correlation among repeated measures of ECD in the IMT implanted eye over time nor the high correlation between the IMT implanted eye and the fellow eye in analyses of ECD loss.
- Lack of a procedure to ensure that all subjects screened for implantation and participation in the post approval study but not enrolled will be described.

ATTACHMENT A: REPORTED OCULAR ADVERSE EVENTS
ALL EYES IMPLANTED WITH IMT

Adverse Events*	Operative N = 206	Day 1 N = 206	Day 7 N = 205	1 Month N = 206	3 Months N = 201	6 Months N = 202	9 Months N = 196	12 Months N = 194	18 Months N = 180	24 Months N = 148	Interim N = 109	Cumulative N = 206
	n (%)	n (%)	n (%)	n (%)	n (%)	n (%)	n (%)	n (%)	n (%)	n (%)	n (%)	n (%)
Anterior chamber inflammation > 30 days	0 (0.0%)	0 (0.0%)	0 (0.0%)	0 (0.0%)	3 (1.5%)	2 (1.0%)	2 (1.0%)	2 (1.0%)	3 (1.7%)	0 (0.0%)	3 (2.8%)	6 (2.9%)
Choroidal neovascularization	0 (0.0%)	0 (0.0%)	0 (0.0%)	0 (0.0%)	0 (0.0%)	2 (1.0%)	2 (1.0%)	1 (0.5%)	2 (1.1%)	2 (1.4%)	0 (0.0%)	5 (2.4%)
Conjunctivitis	0 (0.0%)	0 (0.0%)	0 (0.0%)	0 (0.0%)	1 (0.5%)	0 (0.0%)	0 (0.0%)	0 (0.0%)	0 (0.0%)	0 (0.0%)	3 (2.8%)	4 (1.9%)
Corneal edema > 30 days	0 (0.0%)	0 (0.0%)	0 (0.0%)	0 (0.0%)	1 (0.5%)	1 (0.5%)	1 (0.5%)	0 (0.0%)	0 (0.0%)	3 (2.0%)	2 (1.8%)	6 (2.9%)
Decrease in visual acuity	0 (0.0%)	0 (0.0%)	0 (0.0%)	1 (0.5%)	2 (1.0%)	2 (1.0%)	2 (1.0%)	2 (1.0%)	2 (1.1%)	3 (2.0%)	2 (1.8%)	4 (1.9%)
Diplopia	0 (0.0%)	1 (0.5%)	1 (0.5%)	1 (0.5%)	2 (1.0%)	2 (1.0%)	2 (1.0%)	2 (1.0%)	1 (0.6%)	1 (0.7%)	2 (1.8%)	3 (1.5%)
Distorted pupil	0 (0.0%)	1 (0.5%)	3 (1.5%)	3 (1.5%)	3 (1.5%)	5 (2.5%)	4 (2.0%)	4 (2.1%)	4 (2.2%)	2 (1.4%)	3 (2.8%)	7 (3.4%)
Dry eye	0 (0.0%)	0 (0.0%)	1 (0.5%)	1 (0.5%)	2 (1.0%)	2 (1.0%)	6 (3.1%)	4 (2.1%)	3 (1.7%)	1 (0.7%)	4 (3.7%)	10 (4.9%)
Entropion	0 (0.0%)	0 (0.0%)	0 (0.0%)	1 (0.5%)	1 (0.5%)	1 (0.5%)	1 (0.5%)	0 (0.0%)	0 (0.0%)	0 (0.0%)	1 (0.9%)	3 (1.5%)
Exposed suture	0 (0.0%)	0 (0.0%)	0 (0.0%)	0 (0.0%)	0 (0.0%)	0 (0.0%)	0 (0.0%)	0 (0.0%)	0 (0.0%)	0 (0.0%)	3 (2.8%)	3 (1.5%)
Eye pain	0 (0.0%)	0 (0.0%)	0 (0.0%)	0 (0.0%)	0 (0.0%)	0 (0.0%)	2 (1.0%)	2 (1.0%)	1 (0.6%)	1 (0.7%)	3 (2.8%)	3 (1.5%)
Foreign body sensation	0 (0.0%)	0 (0.0%)	0 (0.0%)	1 (0.5%)	2 (1.0%)	4 (2.0%)	4 (2.0%)	4 (2.1%)	4 (2.2%)	1 (0.7%)	7 (6.4%)	9 (4.4%)
Guttae	0 (0.0%)	0 (0.0%)	0 (0.0%)	0 (0.0%)	1 (0.5%)	7 (3.5%)	8 (4.1%)	13 (6.7%)	11 (6.1%)	9 (6.1%)	3 (2.8%)	16 (7.8%)
IMT removal	0 (0.0%)	0 (0.0%)	0 (0.0%)	0 (0.0%)	0 (0.0%)	0 (0.0%)	0 (0.0%)	0 (0.0%)	0 (0.0%)	0 (0.0%)	8 (7.3%)	8 (3.9%)
Increased IOP requiring treatment > 7 days	0 (0.0%)	0 (0.0%)	0 (0.0%)	5 (2.4%)	2 (1.0%)	1 (0.5%)	1 (0.5%)	1 (0.5%)	1 (0.6%)	2 (1.4%)	3 (2.8%)	7 (3.4%)
Inflammatory deposits on IMT	0 (0.0%)	2 (1.0%)	9 (4.4%)	2 (1.0%)	5 (2.5%)	18 (8.9%)	21 (10.7%)	25 (12.9%)	24 (13.3%)	10 (6.8%)	6 (5.5%)	51 (24.8%)
Iridotomy > 7 days	0 (0.0%)	0 (0.0%)	0 (0.0%)	0 (0.0%)	0 (0.0%)	1 (0.5%)	0 (0.0%)	0 (0.0%)	1 (0.6%)	0 (0.0%)	1 (0.9%)	3 (1.5%)
Iris atrophy > 7 days	0 (0.0%)	0 (0.0%)	0 (0.0%)	4 (1.9%)	4 (2.0%)	4 (2.0%)	3 (1.5%)	6 (3.1%)	7 (3.9%)	7 (4.7%)	2 (1.8%)	7 (3.4%)
Iris transillumination defects > 21 days	0 (0.0%)	0 (0.0%)	0 (0.0%)	5 (2.4%)	9 (4.5%)	9 (4.5%)	9 (4.6%)	8 (4.1%)	8 (4.4%)	6 (4.1%)	2 (1.8%)	11 (5.3%)
Iritis > 30 days	0 (0.0%)	0 (0.0%)	0 (0.0%)	0 (0.0%)	3 (1.5%)	2 (1.0%)	1 (0.5%)	0 (0.0%)	4 (2.2%)	1 (0.7%)	7 (6.4%)	12 (5.8%)
Pigment deposits on IMT	0 (0.0%)	1 (0.5%)	2 (1.0%)	1 (0.5%)	3 (1.5%)	4 (2.0%)	12 (6.1%)	12 (6.2%)	13 (7.2%)	7 (4.7%)	4 (3.7%)	23 (11.2%)
Posterior synechiae	0 (0.0%)	0 (0.0%)	4 (2.0%)	4 (1.9%)	7 (3.5%)	9 (4.5%)	8 (4.1%)	8 (4.1%)	7 (3.9%)	4 (2.7%)	4 (3.7%)	15 (7.3%)
Subconjunctival hemorrhage	0 (0.0%)	1 (0.5%)	0 (0.0%)	0 (0.0%)	0 (0.0%)	1 (0.5%)	1 (0.5%)	0 (0.0%)	0 (0.0%)	0 (0.0%)	6 (5.5%)	9 (4.4%)
Subretinal hemorrhage	0 (0.0%)	0 (0.0%)	0 (0.0%)	0 (0.0%)	0 (0.0%)	0 (0.0%)	0 (0.0%)	0 (0.0%)	1 (0.6%)	1 (0.7%)	1 (0.9%)	3 (1.5%)
Vitreous hemorrhage > 7 days	0 (0.0%)	0 (0.0%)	0 (0.0%)	1 (0.5%)	1 (0.5%)	0 (0.0%)	0 (0.0%)	0 (0.0%)	0 (0.0%)	0 (0.0%)	2 (1.8%)	3 (1.5%)
Vitreous in anterior chamber > 7 days	0 (0.0%)	0 (0.0%)	0 (0.0%)	3 (1.5%)	1 (0.5%)	0 (0.0%)	0 (0.0%)	0 (0.0%)	0 (0.0%)	0 (0.0%)	1 (0.9%)	4 (1.9%)

% = n/N ×100.

The same adverse event could have been reported for a subject at multiple visits.

*The following complications occurred at a rate of ≤ 1.0%: Anterior ischemic optic neuropathy, Corneal decompensation > 7 days, Cyclitic membrane > 7 days, Cystoid macular edema, Device failure, Flat anterior chamber > 21 days, Floaters, Focal striae, IMT dislocation, IMT replacement

ATTACHMENT B: REPORTED OCULAR COMPLICATIONS
ALL EYES IMPLANTED WITH IMT

Complications*	Operative N = 206	Day 1 N = 206	Day 7 N = 205	1 Month N = 206	3 Months N = 201	6 Months N = 202	9 Months N = 196	12 Months N = 194	18 Months N = 180	24 Months N = 148	Interim N = 109	Cumulative N = 206
	n (%)	n (%)	n (%)	n (%)	n (%)	n (%)	n (%)	n (%)	n (%)	n (%)	n (%)	n (%)
Blepharitis	0 (0.0%)	0 (0.0%)	0 (0.0%)	0 (0.0%)	0 (0.0%)	2 (1.0%)	1 (0.5%)	3 (1.5%)	2 (1.1%)	3 (2.0%)	2 (1.8%)	7 (3.4%)
Conjunctival injection	0 (0.0%)	0 (0.0%)	0 (0.0%)	0 (0.0%)	3 (1.5%)	1 (0.5%)	2 (1.0%)	0 (0.0%)	0 (0.0%)	0 (0.0%)	1 (0.9%)	4 (1.9%)
Corneal abrasion	0 (0.0%)	3 (1.5%)	4 (2.0%)	4 (1.9%)	0 (0.0%)	2 (1.0%)	0 (0.0%)	0 (0.0%)	0 (0.0%)	0 (0.0%)	3 (2.8%)	11 (5.3%)
Corneal edema ≤ 30 days	0 (0.0%)	14 (6.8%)	7 (3.4%)	3 (1.5%)	0 (0.0%)	0 (0.0%)	0 (0.0%)	0 (0.0%)	0 (0.0%)	0 (0.0%)	0 (0.0%)	14 (6.8%)
Corneal endothelial touch	2 (1.0%)	2 (1.0%)	0 (0.0%)	0 (0.0%)	0 (0.0%)	0 (0.0%)	0 (0.0%)	0 (0.0%)	0 (0.0%)	0 (0.0%)	0 (0.0%)	3 (1.5%)
Descemet's membrane separation	3 (1.5%)	1 (0.5%)	0 (0.0%)	0 (0.0%)	0 (0.0%)	0 (0.0%)	0 (0.0%)	0 (0.0%)	0 (0.0%)	0 (0.0%)	0 (0.0%)	3 (1.5%)
Dry eyes	0 (0.0%)	0 (0.0%)	0 (0.0%)	0 (0.0%)	0 (0.0%)	0 (0.0%)	0 (0.0%)	0 (0.0%)	1 (0.6%)	2 (1.4%)	0 (0.0%)	3 (1.5%)
Hyphema	0 (0.0%)	8 (3.9%)	3 (1.5%)	0 (0.0%)	0 (0.0%)	0 (0.0%)	0 (0.0%)	0 (0.0%)	0 (0.0%)	0 (0.0%)	1 (0.9%)	10 (4.9%)
Increased IOP requiring treatment ≤ 7 days	0 (0.0%)	50 (24.3%)	14 (6.8%)	0 (0.0%)	0 (0.0%)	0 (0.0%)	0 (0.0%)	0 (0.0%)	0 (0.0%)	0 (0.0%)	1 (0.9%)	57 (27.7%)
Increased IOP ≤ 15 days	0 (0.0%)	2 (1.0%)	2 (1.0%)	0 (0.0%)	0 (0.0%)	0 (0.0%)	0 (0.0%)	0 (0.0%)	0 (0.0%)	0 (0.0%)	0 (0.0%)	3 (1.5%)
Iridotomy ≤ 7 days	2 (1.0%)	1 (0.5%)	0 (0.0%)	0 (0.0%)	0 (0.0%)	0 (0.0%)	0 (0.0%)	0 (0.0%)	0 (0.0%)	0 (0.0%)	0 (0.0%)	3 (1.5%)
Iris atrophy ≤ 7 days	0 (0.0%)	3 (1.5%)	2 (1.0%)	0 (0.0%)	0 (0.0%)	0 (0.0%)	0 (0.0%)	0 (0.0%)	0 (0.0%)	0 (0.0%)	0 (0.0%)	4 (1.9%)
Iris damage	7 (3.4%)	5 (2.4%)	5 (2.4%)	5 (2.4%)	5 (2.5%)	5 (2.5%)	5 (2.6%)	4 (2.1%)	4 (2.2%)	3 (2.0%)	1 (0.9%)	7 (3.4%)
Iris prolapse	6 (2.9%)	3 (1.5%)	3 (1.5%)	0 (0.0%)	0 (0.0%)	0 (0.0%)	0 (0.0%)	0 (0.0%)	0 (0.0%)	0 (0.0%)	2 (1.8%)	12 (5.8%)
Iris transillumination defects ≤ 21 days	0 (0.0%)	4 (1.9%)	6 (2.9%)	2 (1.0%)	0 (0.0%)	0 (0.0%)	0 (0.0%)	0 (0.0%)	0 (0.0%)	0 (0.0%)	0 (0.0%)	7 (3.4%)
Posterior capsular rupture	2 (1.0%)	0 (0.0%)	0 (0.0%)	0 (0.0%)	0 (0.0%)	0 (0.0%)	0 (0.0%)	0 (0.0%)	0 (0.0%)	0 (0.0%)	1 (0.9%)	3 (1.5%)
Posterior capsule opacification	0 (0.0%)	0 (0.0%)	0 (0.0%)	0 (0.0%)	0 (0.0%)	0 (0.0%)	1 (0.5%)	1 (0.5%)	1 (0.6%)	1 (0.7%)	0 (0.0%)	1 (0.5%)
Significant anterior chamber bleeding	3 (1.5%)	2 (1.0%)	0 (0.0%)	0 (0.0%)	0 (0.0%)	0 (0.0%)	0 (0.0%)	0 (0.0%)	0 (0.0%)	0 (0.0%)	0 (0.0%)	3 (1.5%)
Strabismus surgery	0 (0.0%)	0 (0.0%)	0 (0.0%)	0 (0.0%)	0 (0.0%)	0 (0.0%)	0 (0.0%)	0 (0.0%)	0 (0.0%)	0 (0.0%)	1 (0.9%)	1 (0.5%)
Suture rupture	0 (0.0%)	0 (0.0%)	2 (1.0%)	0 (0.0%)	0 (0.0%)	0 (0.0%)	0 (0.0%)	0 (0.0%)	0 (0.0%)	0 (0.0%)	2 (1.8%)	4 (1.9%)
Vitreous in anterior chamber ≤ 7 days	0 (0.0%)	0 (0.0%)	3 (1.5%)	0 (0.0%)	0 (0.0%)	0 (0.0%)	0 (0.0%)	0 (0.0%)	0 (0.0%)	0 (0.0%)	0 (0.0%)	3 (1.5%)
Watery eyes	0 (0.0%)	0 (0.0%)	0 (0.0%)	0 (0.0%)	0 (0.0%)	0 (0.0%)	1 (0.5%)	1 (0.5%)	2 (1.1%)	3 (2.0%)	1 (0.9%)	3 (1.5%)

% = n/N ×100.
The same complication could have been reported for a subject at multiple visits.

The following complications occurred at a rate of ≤ 1.0%: Anterior chamber hemorrhage, Anterior segment neovascularization, Anterior synechiae, Bleb, Blurred vision, Cataract, Cataract removal, Chalazion, Cortical remnants, Cyclitic membrane ≤ 7 days, Cyclodialysis cleft, Disc hemorrhage, Dry eyes, Ectropion, Endothelial folds, Flat anterior chamber ≤ 21 days, Folds in corneal graft, Glaucoma, Haze, Hypertony, Hypotony, Iris incarceration, Iritis ≤ 30 days, Keratitic precipitates on IMT, Ophthalmic migraine, Other, Peribulbar hemorrhage, Peripapillary hemorrhage, Phthisis, Superficial punctate keratitis, Surgical mydriasis, Uveitis, Vitreous bulge, Vitreous loss, Vitreous loss - vitrectomy required, Worsening cataract (fellow eye), Worsening of subretinal scarring, Wound leak

FDA Executive Summary - Addendum

Prepared for the
July 14, 2006, meeting of the
Ophthalmic Devices Panel

P050034
VisionCare Ophthalmic Technologies, Inc.
Implantable Miniature Telescope (IMT)

1. Introduction

This addendum concerns the statistical evaluation of the information provided in amendments 4 and 5 to P050034.

2. Statistical evaluation

Amendment 4 clarified some questions the FDA raised on the teleconference on May 30, 2006 with the sponsor concerning modeling of the Endothelial Cell Density (ECD) data. The sponsor argued that in addition to the breakpoint of t=3 months, another breakpoint of t=9 months is clinically relevant. A mixed effect model which used two breakpoints, t=3 months and t=9 months was fitted assuming that there is an linear acute ECD drop from baseline to 3 months, and two additional linear trends from 3 months to 9 months and 9 months to 24 months regarding the chronic ECD development. The sponsor's results are summarized in the following table (Table A):

Table A: Fixed Effect results of ECD from IMT Eyes (Reduced Model)

Solution for Fixed Effects					
Effect	**Estimate**	**Standard Error**	**DF**	**t Value**	**2-sided p-value**
Intercept	1798.53	206.20	214	8.72	<0.0001
Month (<3M)	-329.37	72.0806	207	-4.57	<0.0001
Month (3 to 9M)	-17.6307	3.3830	201	-5.21	<0.0001
Month (>9M)	-5.7588	1.6080	192	-3.58	0.0004
ACD	180.55	64.4237	523	2.80	0.0053
ACD*Month(<3M)	64.3381	22.7157	523	2.83	0.0048

Results in Table A are consistent with those of the FDA's model (Statistical Review for Amendment 3) which used only one breakpoint of t=3 months: ECD loss rates are all

significantly different than zero ($p<0.001$) in the periods (baseline to 3 months, 3 months to 9 months and 9 months till the end of study).

The sponsor's Amendment 5 used the same model to predict the ECD up to 4 years. The following table (Table B) submitted by the sponsor predicted the probabilities of ECD<1000 for eyes with different baseline ECD and ACD values.

Table B: Predicted Probability of ECD <1000 cells/mm^2 Mixed Effect 3-Piece Piecewise Regression Model with Break Points at 3 and 9 Months

Baseline ECD	ACD 2.5	3.0	3.5	4.0
Month 3				
2500	0.010	0.006	0.003	0.001
2000	0.125	0.084	0.055	0.034
1600	0.413	0.328	0.251	0.185
2 Years (Month 24)				
2500	0.051	0.033	0.021	0.013
2000	0.269	0.208	0.156	0.114
1600	0.579	0.501	0.423	0.348
3 Years (Month 36)				
2500	0.093	0.068	0.048	0.033
2000	0.337	0.276	0.221	0.173
1600	0.618	0.550	0.481	0.413
4 Years (Month 48)				
2500	0.149	0.116	0.089	0.067
2000	0.398	0.341	0.288	0.238
1600	0.644	0.587	0.527	0.467

The Reviewer's Comments:

1. It is noticed that the ECD data of fellow eyes were not used in the mixed effect model.

2. As pointed out by the Agency at the teleconference on May 30, 2006, the variation in actual follow-up visit time is relatively large and the actual visit time should be used. However, the nominal visit times (0, 3, 6, 9, 12, 18 and 24 months) were used by the sponsor rather than the actual visit time. The following graph demonstrates overlaps between the consecutive follow-up visits. Therefore using nominal visit time may erroneously designate the timing of ECD data in the mixed effect model.

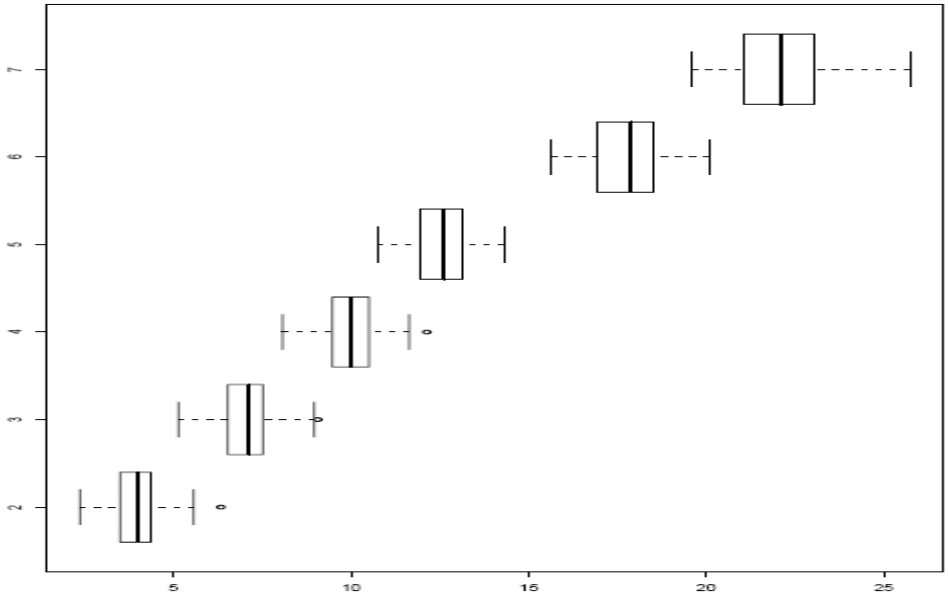

3. The sponsor argued that in addition to the breakpoint of t=3 months, another breakpoint of t=9 months is clinically relevant; i.e. a three piecewise linear model should be used to fit the data by assuming that there is an linear acute ECD drop from baseline to 3 months, and two different linear trends (3 months to 9 months and 9 months till the end of the study) concerning the chronic ECD development. The rationale of the three piecewise linear model is not defined in the protocol or in any pre-specified analysis plan. Additionally, the rationale for this model has not been fully justified.

   The results with this three piecewise model are consistent with those of the Agency's model (Statistical Review for Amendment 3) which used only one breakpoint of t=3 months: ECD loss rates are all significantly different than zero in the periods of baseline to 3 months, 3 months to 9 months and 9 months to 24 months. The predicted probabilities are also similar to those of the agency's model. For example, for a subject with ECD=2000 at baseline and ACD=4.0mm, the probability to have ECD count less than 1000 is about 24% at the end of 4 years.

Attachment 2:

Post-panel Summary

Panel Meeting Summary - July 14, 2006 Meeting of the Ophthalmic Devices Panel

The Ophthalmic Devices Panel of the Medical Devices Advisory Committee met on July 14, 2006, in an open session.

The Implantable Miniature Telescope (IMT) is indicated for use in adult subjects with bilateral, stable, untreatable moderate to profound central vision impairment due to macular degeneration.

The IMT is a visual prosthetic device which, when combined with the cornea, constitutes a telephoto lens for improvement of visual acuity in subjects with bilateral moderate to profound macular degeneration. The IMT device is surgically implanted in the posterior chamber of the eye, in place of the eye's crystalline lens and is held in position by haptic loops.

The IMT device contains two micro lenses, which magnify objects in the central visual field, allowing the patient to see without the need for external low-vision aids. A magnified image is projected by the IMT implant onto the retina, enabling the patient to recognize and identify objects that could not otherwise be seen. The IMT device is available in two models: Wide Angle (WA) 2.2X, and Wide Angle (WA) 3.0X, which provide nominal magnification of x2.2 and x2.7, respectively.

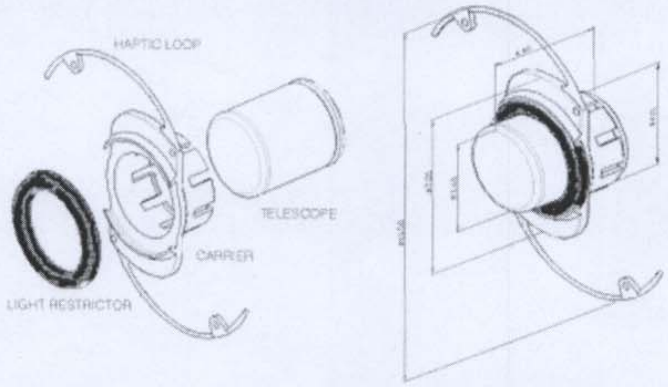

Both models are designed predominantly for the restoration of intermediate to far vision (increasing the ability to view objects several meters away from the patient). The addition of conventional spectacles provides correction for near vision activities.

The IMT device is implanted in one eye only. The implanted eye provides central vision, while the fellow eye continues to be used for peripheral vision. The IMT implant is composed of three

primary components; a fused silica capsule that contains optical elements, a clear polymethylmethacrylate (PMMA) carrier, and a blue PMMA light restrictor. The optical component is snap-fitted into the carrier. One of the internal components (not in contact with body fluids or tissue) of the IMT implant contains stainless steel, which may interfere with the safe use of Magnetic Resonance Imaging (MRI). Until MRI compatibility of the IMT implant has been established, the use of MRI is contraindicated, as stated in the proposed labeling.

The sponsor conducted a prospective multi-center clinical trial utilizing twenty-eight (28) clinical sites and enrolling a total of 218 consecutive subjects. The primary SafetyEndpoint for this study was the mean percentage endothelial cell density (ECD) loss less than or equal to 17% at one year post IMT implantation. Secondary safety endpoint was preservation of best corrected visual acuity. Specifically, no more than 10% of implanted eyes were to experience a loss of more than 2 lines of either near or distance BCVA without a corresponding improvement in BCVA (gain of 2 lines or more).

The primary effectiveness endpoint for this study was defined as an improvement of 2 lines or greater in either near or distance best corrected acuity in 50% of the implanted eyes at 12 months post-implantation. Quality of Life surveys (Activities of Daily Living (ADL) and National Eye Institute Visual Function Questionnaire (NEI-VFQ-25)) were secondary measurements of efficacy.

At 1 year post-implantation, the sponsor reported that the mean endothelial cell density had decreased 25.3% in the eyes that had received the IMT, and that 90.1% of implanted eyes had an improvement of ≥2 lines in either near or distance best corrected acuity.

On a 10-3 vote, the panel recommended that the VisionCare Technology PMA be found "not approvable", i.e. the data did not provide reasonable assurance that the device is safe and effective under the conditions of use prescribed, recommended, or suggested in the proposed labeling.

The panel decision was based on unresolved safety concerns, in addition to uncertainty regarding the efficacy of the device. The panel noted that the absence of morphometric analysis of the endothelial cell density data did not allow them to adequately evaluate the chronic rate of endothelial cell density loss, a major safety concern for this device, in eyes that had received the IMT. In addition, the panel noted confounding factors that may have influenced the efficacy of the device.

The transcriptionist for this meeting was Neal R. Gross & Company, 1323 Rhode Island Avenue, NW, Washington, D.C. 20005, (202) 234-4433.

Contact: Sara T. Thornton, Executive Secretary, 301-594-2053 x 127.

Updated July 18, 2006

SUMMARY MINUTES

OF THE

109th MEETING OF THE

OPHTHALMIC DEVICES PANEL

OPEN SESSION

July 14, 2006

Hilton Washington D.C. North

Gaithersburg, Maryland

Ophthalmic Devices Panel Meeting

July 14, 2006

Attendees

Chair
William D. Mathers, M.D.
Casey Eye Institute
Oregon Health Sciences University
Portland, OR

Executive Secretary
Sara M. Thornton
Food and Drug Administration
Rockville, MD

Voting Members
Neil M. Bressler, M.D.
Wilmer Eye Institute
The Johns Hopkins University School of Medicine
Baltimore, MD

Stephen A. Burns, Ph.D.
Indiana University School of Optometry
Bloomington, IN

Timothy B. Edrington, O.D.
Southern California College of Optometry
Fullerton, CA

Dale K. Heuer, M.D.
Medical College of Wisconsin
Madison, WI

Andrew J. Huang, M.D., M.P.H.
University of Minnesota
Minneapolis, MN

Consultants
Richard Brilliant, O.D.
The Eye Institute
Pennsylvania College of Optometry
Philadelphia, PA

Frederick Ferris, M.D.
National Eye Institute
Rockville, MD

Michael R. Grimmett, M.D.
Grimmett Eyecare, LLC
Palm Beach Gardens, FL

Barrett G. Haik, M.D.
University of Tennessee
College of Medicine
Memphis, TN

Mari Palta, Ph.D.
University of Wisconsin-Madison
Madison, WI

Janet S. Sunness, M.D.
Hoover Services for Low Vision and Blindness
Greater Baltimore Medical Center
Baltimore, MD

Janet Szlyk, Ph.D.
University of Illinois at Chicago
College of Medicine
Chicago, IL

Jayne S. Weiss, M.D.
Kresge Eye Institute
Wayne State University
Detroit, MI

Industry Representative
Barbara A. Niksch
Visiogen, Inc.
Irvine, CA

Consumer Representative
Richard T. Bunner
Private Public Health Consultant
Zanesville, OH

FDA Participants
Malvina B. Eydelman, M.D.
Director
Division of Ophthalmic Devices

Aron Yustein, M.D.
Deputy Clinical Director
Office of Device Evaluation

Kesia Y. Alexander, Ph.D.
Chief
Intraocular and Corneal Implants Branch

James F. Saviola, O.D.
Chief
Vitreoretinal and Extraocular Devices Branch

Everette T. Beers, Ph.D.
Chief
Diagnostic and Surgical Devices Branch

Sousan S. Altaie, Ph.D.
Scientific Policy Advisor
Office of In Vitro Diagnostic Device Evaluation and Safety

Danica Marinac-Dabic, M.D., Ph.D.
Chief, Epidemiology Branch
Office of Surveillance and Biometrics

Don Calogero, M.S.
Biomedical Engineer
Intraocular and Corneal Implants Branch

Bernard P. Lepri, O.D., M.S., M.Ed.
Clinical Reviewer
Vitreoretinal and Extraocular Devices Branch

T.C. Lu Hollington, M.S., M.A.
Mathematical Statistician
Division of Biostatistics
Office of Surveillance and Biometrics

Yao Huang, M.S.
Mathematical Statistician
Division of Biostatistics
Office of Surveillance and Biometrics

Bruce Drum, Ph.D.
Vision Scientist
Division of Ophthalmic Devices

CALL TO ORDER AND INTRODUCTIONS

Panel Chair William D. Mathers, M.D., called the meeting to order at 8:48 a.m. He asked the panel members to introduce themselves. **Panel Executive Secretary Ms. Sara M. Thornton** introduced Ms. Karen Warburton, who will be assuming the role of Executive Secretary following Ms. Thornton's retirement next May. Ms. Thornton announced that the panel meeting scheduled for September 19-20, 2006 had been canceled.
Ms. Thornton read the appointment to temporary voting status for Richard Brilliant, O.D.; Frederick L. Ferris, M.D.; Michael R. Grimmett, M.D.; Barrett G. Haik, M.D.; Mari Palta, Ph.D.; Janet S. Sunness, M.D.; Janet Szlyk, Ph.D.; and Jayne S. Weiss, M.D. She then read the conflict of interest statement. Waivers were granted to Neil M. Bressler, M.D., and Dale K. Heuer, M.D.

FDA AWARD PRESENTATION

Aron Yustein, M.D., Deputy Clinical Director, Office of Device Evaluation, presented an award to Jayne S. Weiss, M.D. in recognition of her past service as Chair of the Ophthalmic Devices Advisory Panel.

DIVISION UPDATES

Malvina B. Eydelman, M.D., Director, Division of Ophthalmic Devices, related the loss of several people at the Division, including Dr. Ralph Rosenthal, the former Division Director from 1996 to March of 2005, who passed away in January of 2006, and Mr. David Whipple, who retired in May of 2006. Dr. Eydelman then introduced Dr. Kesia Alexander as the new Chief of the Intraocular and Corneal Implants Branch, and new Division scientists Dr. Tina King, Ms. Claudine Krawczyk, Dr. Joseph Hutter, and Dr. Mark Robboy .

BRANCH UPDATES

Kesia Y. Alexander, Ph.D., Chief, Intraocular and Corneal Implants Branch, began by reviewing premarket approval applications (PMAs) and humanitarian device exemptions (HDEs) approved since the last panel meeting. The PMAs approved are P030023, approved April 27, 2004 for Ophtec's Oculaid Stableyes Capsular Tension Rings; P030028, approved September 9, 2004 for Ophtec's Artisan Verisyse Phakic Intraocular Lens (IOL); P040020, approved March 21, 2005 for Alcon's Acrysof IOL; P840064, approved March 23, 2005 for Alcon's Discovisc Ophthalmic viscosurgical device; P930014, approved September 14, 2005

for Alcon's AcrySof Single Piece IOL with Toric Optic; P010059 for Morcher Cionni Capsular Tension Rings; and P030016, approved December 22, 2005 for STAAR's Visian Implantable Collamer Lens. One HDE, H04002, was approved on July 26, 2004 for Additions Technology INTACS prescription inserts for keratoconus.

Alexander stated that recent cases of Toxic Anterior Segment Syndrome (TASS) are under investigation. She said that one branch member, Ms. Susan Gouge, had passed away following a car accident in November of 2005.

Everette T. Beers, Ph.D., Chief, Diagnostic and Surgical Devices Branch, said his branch had not had any staff changes since the last meeting. He then reviewed the eight PMAs approved since that time: Monovision's Refractec ViewPoint CK System, approved March 16, 2004; the VISX Wavefront-guided hyperopia plus astigmatism in December 2004; VISX Wavefront-guided mixed astigmatism in March 2005; VISX Wavefront-guided high myopia plus astigmatism in August 2005; Alcon's custom cornea system for wavefront-guided myopic astigmatism in June 2004; Alcon's Wavefront-guided LASIK for correction of hyperopic astigmatism and Wavefront-guided LASIK for correction of mixed astigmatism, both in May 2006; and WaveLight Allegretto received approval in April 2006 for conventional LASIK for mixed astigmatism.

James F. Saviola, O.D., Chief, Vitreoretinal and Extraocular Devices Branch, began by noting the retirement of several individuals from the branch, including Dr. Daniel W.C. Brown, a former executive secretary for the panel, Dr. Jimmy Chen, Ms. Eleanor McGhee, and Dr. Linda Cohen. Three PMAs approved since the last meeting are P040045 for the Vistakon Oasis senofilcon silicone hydrogel lens in December 2005, P010062 for the Euclid Orthokeratology contact lens for overnight wear (marketed by Bausch & Lomb as the Boston Vision Treatment System) in June 2004, and P040029 for Dr. John Szabocsik's JSZ Orthokeratology contact lens (the same device as the Euclid lens) in September 2004.
Dr. Saviola noted that postmarket surveillance was underway to address concerns about the use of overnight orthokeratology lenses in patients under 18 years of age. Referring to the recent Fusarium outbreak associated with Bausch & Lomb's ReNu MoistureLoc, Dr. Saviola thanked the Mycotics Disease Branch at CDC, various state health departments, the individual doctors who reported the outbreak, and various professional organizations for their efforts in dealing with the outbreak. FDA is still trying to definitively determine the cause of

the event. Dr. Saviola also reported that FDA is working with the American National Standards Institute (ANSI) on the issue of contact lens groupings related to the new silicone hydrogel lenses. Finally, he announced that the Food, Drug, and Cosmetic Act had been amended to establish that all contact lenses, including plano or decorative, noncorrective contact lenses, are classified as devices.

CRITICAL PATH INITIATIVE IN MEDICAL DEVICES

Sousan S. Altaie, Ph.D., Scientific Policy Advisor, Office of In Vitro Diagnostic Device Evaluation and Safety, gave a presentation on FDA's Critical Path Initiative, a serious effort to make product development more predictable and less costly. Critical path tools are used in the assessment of safety to predict whether the product will be harmful; in proof of efficacy to determine if it will have medical benefits; and in industrialization to ensure the product is manufactured with consistent quality.

Dr. Altaie described some of the differences between devices and drugs in the critical path track. For devices, biocompatibility databases are one example of a safety tool; surrogate endpoints and computer simulation modeling are possible effectiveness tools; and practice guidelines and validated training tools are examples of industrialization tools.

CONDITION OF APPROVAL STUDIES

Danica Marinac-Dabic, M.D., Ph.D., Chief, Epidemiology Branch, Office of Surveillance and Biometrics, discussed recent changes in the condition of approval study program. FDA has authority to require manufacturers to conduct post-approval studies.
An internal evaluation of the program revealed that the Center for Devices and Radiological Health (CDRH) had limited procedures for tracking these studies, due to deficient information technology (IT) systems; a high turnover of lead reviewers which resulted in a lack of continuity and follow-up; and a lack of premarket resources.
The program was transferred to the Office of Surveillance and Biometrics to better utilize resources. An automated tracking system was also established for the program.
Epidemiologists review the PMA and are charged with development of a postmarket monitoring plan during the premarket review process, development of postmarket questions, and design of study protocols. Dr. Marinac-Dabic described a comprehensive approach

including medical device report (MDR) analysis, literature reviews, and external databases. Furthermore, significant findings will be reported to the advisory panels.

The benefits of these changes are better designed post approval studies, tracking of those studies, and collection of more complete postmarket information. There will also be an attempt to identify postmarket questions prior to panel meetings so that any questions raised can be better addressed.

Dr. Ferris asked whether postmarket surveillance was limited to observational studies. Dr. Marinac-Dabic replied that randomized clinical trials could be done but are generally avoided because of the ethical issues and the burden to sponsors.

OPEN PUBLIC HEARING

Mrs. Janet Grant talked about the impact of the implantable miniature telescope (IMT) on her life. It has enabled her to return to reading, her painting hobby, and bike riding. Mr. **Edward Nungasser** discussed how is life has been changed by the IMT and asked the panel to give the PMA serious consideration.

R. Doyle Stulting, M.D., Ph.D., Emory University, read a letter from one of the clinical investigators, Susan Primo, O.D., who was unable to attend the meeting. She said the IMT was the first surgical option to help her visually impaired patients. While she was initially concerned about her patients' ability to get around, the rehabilitation sessions made this much less of an issue.

Another concern was different image sizes, known as aniseikonia, but after several months most patients did not have any issues with this. Dr. Primo suggested that cortical plasticity might explain the brain's ability to compensate.

Internal placement of the IMT allows for significant increase in visual field and elimination of the ring scotoma associated with external telescopes, and placement near the center of the eye's rotation virtually eliminates the dramatic head movements otherwise required. There is also benefit in that the IMT does not require the use of a patient's hands. Dr. Primo stressed patient selection, training, and rehabilitation.

SPONSOR PRESENTATION

Judy Gordon, D.V.M., President, ClinReg Consulting Services, Inc., began the sponsor presentation by introducing the other presenters. She noted that none of the investigators who participated in the clinical trial have a financial interest in Vision Care. She then reviewed that the IMT is indicated for patients age 55 and older with bilateral stable moderate to profound central vision impairment with best corrected vision of 20/80 to 20/800. Patients must also have adequate peripheral vision in the eye not selected, show an improvement of five letters on ETDRS visual acuity chart with an external telescope, and be willing to undergo a postoperative vision rehabilitation program.

Jeff Heier, M.D., Ophthalmic Consultants of Boston, began by giving an overview of end-stage macular degeneration. The IMT is an optical prosthesis which in combination with optics of the cornea constitutes a telephoto lens. There are two models, WA 2.2x and WA 3.0x, providing 2.2x and 2.8x magnification. As opposed to external telescopes, the IMT provides a wider visual field, allows natural eye movements, and has normal cosmetic appearance. It enlarges the retinal image and reduces the relative scotoma by projecting the image onto a larger portion of the normal functioning retina. The central five degrees may be partially or completely damaged in end-stage disease, and the IMT uses the central 50 degrees. The vertex difference present with external telescopes results in a narrow field of view. Dr. Heier demonstrated the differences using scotoma mappings and field of view measurements taken from patients before and after implantation.

Stephen Lane, M.D., Associated Eye Care, Cornea/Anterior Segment, discussed the surgical procedure utilized. The IMT is larger than the standard IOL and requires at least a twelve millimeter incision. It is designed to be placed in the capsular bag, and the angulation of the haptics displaces the IMT posteriorly which keeps the bag taut, provides stability and centration, and improves clearance between the device and corneal endothelium. The anterior surface extends approximately half a millimeter through the plane of the iris.
There is a need to avoid corneal touch during insertion into the capsular bag; the surgical procedure results in average endothelial cell loss of twenty percent, which is similar to data for large incision cataract surgery.

The learning curve tends to last for the first three cases. Positioned correctly, both haptics should be inside the bag. Dr. Lane further explained the procedure and showed a brief video of the procedure.

Dr. Lane continued with a discussion of the study design of Protocol IMT-002. Twenty-eight centers participated. Patients were screened using an external telescope, and a gain of at least five letters was required for enrollment. In patients with better than 20/200 in one eye, implantation was done in the eye with poorer vision, and in those with worse than 20/200 in both eyes, the decision was based on the patient's experience with the external telescope. Patients returned for ophthalmic examinations and vision training at regular intervals. All participants are being consented for five years of continued follow-up. Eligibility requirements included bilateral, stable, untreatable age-related macular degeneration (AMD); best corrected vision of 20/80 to 20/800; and adequate peripheral vision in the fellow eye. The baseline manifest sphere was limited to +4 to -6 diopters to exclude high myopes and high hyperopes. Those with ocular pathologies such as uncontrolled glaucoma were also excluded. Minimum endothelial cell density (ECD) of 1,600 cells per millimeter squared was required, but Vision Care has since proposed minimum ECD of 2,000 or an ECD grid based on age and life expectancy.

Distance and near vision were measured during all study visits using ETDRS charts. Quality of life was assessed using the visual function questionnaire–25 (VFQ-25) and a modified activities of daily living questionnaire. Specular microscopy was also performed, and images were analyzed by Drs. Henry Edelhauser and Bernard McCarey at a central reading center at Emory University.

The rehabilitation and training program was developed by experts led by Dr. Eli Pelli of the Schepens Eye Institute. It consisted of gradual vision practice exercises and emphasized five skills: localizing, fixating, scanning, tracing, and tracking.

The key safety and effectiveness endpoints were change in lines of best corrected vision, quality of life questionnaires, endothelial cell loss, and complications/adverse events.
Dr. Heier said that one of the 218 patients enrolled withdrew prior to surgery. Intraoperative complications resulted in eleven eyes not being implanted, leaving a total of 206 eyes. The complications were seven cases of posterior capsular rupture, two eyes identified as having

choroidal detachment, one eye with choroidal hemorrhage, and one eye with loss of zonular support. With regard to the cases of choroidal detachment, there was positive posterior pressure and chamber shallowing but no verified sign of detachment. The intraoperative complications did not result in vision loss.

Accountability for the 206 subjects was 97.5 percent at twelve months and 95.5 percent at 24 months. For the complete safety cohort it was 92.6 percent at 24 months. These levels of accountability are excellent considering the age of the subjects and the level of visual disability.

The mean age was 75 years. There was relatively even distribution of males and females. Most subjects were Caucasian. Mean baseline corrected distance vision was 20/312 but ranged from 20/80 to 20/800. The mean vision found in AMD treatment trials is typically in the 20/80 to 20/125 range.

Recent advances in the field of AMD provide new options for stabilization and possible visual recovery for patients with new onset exudative disease, but these options are not available for end-stage patients. The primary study endpoint was improvement in either distance or near vision of two lines or more at twelve months, and almost 90 percent of subjects reached this attained this outcome. Over 80 percent achieved improvement of three or more lines. The results were almost unchanged at 24 months. About 70 percent gained two or more lines in both distance ad near vision, and 50 percent gained three or more lines in both.

Looking at actual versus predicted visual improvement, patients came very close to the predicted results. About 50 percent met or exceeded the expected gain. Fewer patients met the gain expected with the external telescope. The VFQ-25 is a validated quality of life questionnaire developed to measure the impact of vision problems. It has been established that a five to ten point change in score corresponds to a two or three line vision change. In the most relevant areas of the VFQ-25, patients demonstrated improvement of six to fourteen points. There was no effect of age, baseline vision, or IMT model on the change in scores. There were significant improvements in questions five through nine, information not previously provided to the panel. IMT has demonstrated clinically significant benefits for end-stage AMD patients. Patients' vision and quality of life improved.

Dr. Stulting presented the safety findings. Two and a half percent of eyes lost two or more lines of best spectacle-corrected visual acuity. The gap between theoretical and actual performance was better for the IMT than for the external telescope. Since these differences exist, adjustment of the loss of lines by the theoretical gain is not a meaningful reflection of changes in vision for the study population; rather, the unadjusted visual acuity values are the most meaningful.

Following implantation there was a transient rise in intraocular pressure. Perioperative complications with an incidence of one or more percent were typical of large incision cataract surgery, although some cases of Descemet's detachment may have been due to the large profile of the IMT. Eight eyes developed non-visually significant posterior capsular pacification. Surgical capsulotomy has been performed in two implanted eyes. Postoperative adverse events were also typical of those associated with large incision cataract surgery with the exception of corneal edema, device failure, and inflammatory membranes on the IMT. Adverse events with cumulative incidence of five percent or more include iris transillumination defect and inflammatory precipitants, which appeared in 24.8 percent of eyes in the early postoperative period and responded to dilation and steroid treatment. It is believed they are due to contact between the iris and the IMT, so dilation is recommended for three months after implantation.

The eight removals consisted of two device failures, four explants due to dissatisfaction of the patient, and two cases of corneal decompensation. The two failures were found to have cracks in the lateral wall which led to liquid condensation. Following additional physician training and modification of the manufacturing process the problem did not reoccur. Of those who were dissatisfied with the results, three complained of glare and bright light and the other experienced haze, loss of peripheral vision in the implanted eye, and loss of depth perception. In both cases of decompensation, the surgeon encountered positive vitreous pressure, iris prolapse, and shallowing of the anterior chamber during surgery. In one, one haptic was placed in ciliary sulcus. In both cases uneventful corneal transplantation and IOL exchange were performed.

As would be anticipated given the age of the study population, there were a number of monocular adverse events, and there was consideration given to whether falls or fractures might have resulted from the IMT. It was determined that the falls were unrelated. The

reported rate of falls for those with normal vision in the entire elderly population has been reported as four percent, and for those with low vision eleven percent. The observed rate among the study cohort was only two percent.

A standardized protocol and a central reading center were used to analyze ECD. In multicenter studies using a single reader precision of measurement of ECD varies from eight to ten percent.

The greatest reduction in ECD occurs between baseline and three months, which was anticipated given the incision size and configuration of the IMT. After three months the change between visits decreases substantially. Mean ECD approximated that of the cohort of 36 pseudophakic fellow eyes which had undergone cataract surgery prior to enrollment. However, the variation was greater for the IMT eyes.

Published literature reveals that endothelial cell loss was not substantially greater than for conventional cataract surgery, even modern small incision surgeries. Corneal edema and surgeon specialty were significantly associated with the change in ECD at three months. There also tended to be a greater loss for a surgeon's first case. Loss was less for those whose surgeries were performed by cornea trained subspecialists, which suggests that endothelial cell loss can be reduced through training and experience with anterior segment procedures. For a surgeon's first three cases, anterior chamber depth (ACD) had a linear effect on percentage change in ECD, but no effect thereafter. However, the predictive power of ACD was rather poor. Factors such as vitreous pressure and training seem to have a greater influence.

Surgeon training is critical. It is recommended that patients with higher greater ECD and ACDs be selected for each surgeon's initial cases. The rate of cell loss decreases with time, and a two percent gain in ECD was reported between twelve and eighteen months. The rate of loss continues to decrease during follow up, and this is consistent with acute surgery-related damage followed by endothelial cell migration and a return to a steady state rate of loss seen in the aging population.

Concerned about the rate of loss more than two years after implantation, a piecewise regression model was constructed assuming a change at three and nine months.

It is consistent with the known pathophysiology of cell loss after cataract extraction. Projections were made based on initial densities of 1,600, 2,000, and 2,500 cells per millimeter squared. Corneal decompensation occurs at around 500 cells per millimeter squared, so selection criteria can provide reasonable assurance of a clear cornea for the lifetime of the population. A minimum ECD based on age and life expectancy should be used as a selection criteria. The risk of cell loss must be balanced with the significant improvements provided by the IMT.

PANEL QUESTIONS FOR SPONSOR

Dr. Grimmett wondered if the haptics were more stiff than a traditional IOL given that three or four percent ended up in the sulcus. Dr. Lane said they are indeed stiffer. Dr. Grimmett then asked about the measurement on the ultrasound slide, and Dr. Lane said it was taken from the center of the IMT to the endothelial surface. Dr. Grimmett then asked what the peripheral optic endothelial distance was, and Dr. Lane said it was 2.18 mm. Dr. Grimmett then asked for the mean ACD for the seven eyes on the slide, and the sponsor replied that it was 3.19 mm. He then asked why the other eyes were excluded. **Alan Sugar, M.D., Kellogg Eye Center, University of Michigan,** replied that the ultrasound biometric scope was obtained during the middle of the study and that it was a convenience sample. Dr. Sunness asked about change over time in the visual acuity of the fellow eye. Dr. Gordon said the measurements had been made but were not included in the PMA. Dr. Sunness then asked about differentiating the effects of the vision training versus the IMT itself. Dr. Bullimore said it was a challenge and said that the recommended labeling says the benefits of the IMT can be maximized with a rehabilitation program.

Dr. Weiss asked why some patients had hyphema and also asked whether the stiffness of the haptic and resulting sulcus placement might be associated with the cyclodialysis and seen in two patients as well as bleeding. Dr. Lane suggested the hyphema was a result of the large incision. He said it was possible the stiff haptics had resulted in cyclodialysis but thought it was complicated by other factors. However, he noted that there were cases without complications in which one haptic was not placed in the bag.

Dr. Weiss next asked why the sponsors used needling rather than YAG capsulotomy on two patients with visually significant PCO. Dr. Lane said that in one of the cases there was not

adequate papillary dilation. Dr. Weiss inquired further about a recommendation made that YAG capsulotomy be used to dissect adhesions. Dr. Lane said he did not think that had been attempted and would be quite difficult. He said that it would depend on the extent of the adhesions. Dr. Gordon added that all of the labeling presented was proposed draft labeling and would be revised.

Dr. Palta asked about continued difficulty with reading newspapers, and Dr. Bressler said that was the most difficult task on the VFQ and that even those with 20/80 vision prior to implantation would not be expected to be able to accomplish it without at least some difficulty. Dr. Palta asked whether the final model referred to was the piecewise linear mixed effect model and also asked about the exponential model. Dr. Gordon replied that the first reference in the slides was not to the piecewise regression model.

Henry F. Edelhauser, Ph.D., Emory University, said the modeling had not taken into consideration the increase in peripheral endothelial cell densities.
Dr. Heuer asked whether the sponsor had attempted to assess the degree to which cataract removal alone contributed to the improvements in vision. Dr. Bullimore said that one entry requirement was no visually significant cataract and that their preoperative visual acuity using the external telescope was pretty similar to what they achieved with the IMT.
Dr. Huang asked whether any patients had posterior capsule rupture after implantation given that the final tabulation indicated ten patients with rupture while seven were excluded from implantation due to posterior capsule rupture. Dr. Gordon said they would answer the question after they reviewed the data. Dr. Huang then asked for explanation of patients' indications of significant improvement of near vision. Dr. Bullimore said that it was not a multifocal device and that the patients would function like any other presbyopic patient using reading glasses or bifocals. Dr. Huang asked whether it was measured binocularly. Dr. Bullimore responded that the VFQ was concerned with habitual, binocular vision, including with corrective lenses.

Dr. Bressler asked for a definition of "no active CNV" as an enrollment criterion. Dr. Heier said there had to be no signs of active neovascularization or bleeding within the past six months and clarified active to mean no fluorescein leakage. Dr. Bressler then asked about the follow up and vision outcomes for the eleven eyes not implanted. Dr. Gordon said they were followed as long as they were willing to come back and that there was no loss of vision from

baseline. Dr. Bressler next inquired whether last observation carried forward was used for the thirteen subjects lost prior to twelve months. Dr. Gordon said that observed data was used in all analyses and that the high accountability lessened the importance of the missing data for those patients. Dr. Bressler asked for the most recent data on those thirteen, and Dr. Gordon said it was included on the slide showing loss of lines of acuity.

Dr. Ferris asked for clarification of his confusion regarding clear lenses given that the eligibility criteria state there must be evidence of cataract. Ms. Thornton asked the sponsor to defer the answer until later so that the FDA's presentations could go forward.

FDA PRESENTATION

Don Calogero, M.S., Biomedical Engineer, Intraocular and Corneal Implants Branch, began with a description of the two models of the device. The anterior surface of the IMT protrudes about 0.6 millimeters into the anterior chamber. Due to the magnification, retinal luminance is reduced by 0.7 for the 2.2x and 0.9 for model 3.0x. The standard battery of preclinical tests was performed. FDA has no concerns remaining regarding the preclinical testing. Mr. Calogero introduced the rest of the PMA review team.

Bernard P. Lepri, O.D., M.S., M.Ed., Clinical Reviewer, Vitreoretinal and Extraocular Devices Branch, presented the analysis of the critical clinical outcomes.
He read the proposed indication: The IMT is indicated for use in adult patients with bilateral stable untreatable moderate to profound central vision impairment due to macular degeneration as determined by fluorescein angiography and cataract in patients who are 55 years of age or older; have a best corrected distance visual acuity ranging from 20/80 to 20/800; and have adequate peripheral vision in the non-operative eye. He then discussed the study. The primary effectiveness endpoint was improvement of two lines or more of best corrected distance or near vision in 50 percent of eyes at 12 months, and the secondary measure was performance on the two quality of life surveys. The primary safety endpoint was mean ECD loss of less than or equal to 17 percent at 12 months, and preservation of best corrected visual acuity was another.

Dr. Lepri reviewed the data on endothelial cell loss. For the ten percent of eyes with the greatest decrease, there was a 60 percent loss for the implanted eyes versus only 12.5 percent

for the fellow eyes. The fellow eyes show relatively constant ECD. The sponsor presented no morphometric data. In making its recommendations the panel should also consider surgical order, ACDs of less than 3 millimeters, and surgeon specialty. Age is also an important consideration given increasing life expectancies.

Corneal edema becomes possible at ECD of less than or equal to 800 cells per millimeter squared, so FDA looked at the number of eyes that would deteriorate to ECD of less than or equal to 1,000. At two years, 11.1 percent of eyes are projected to be at or below that level; at three years, 17.6 percent; and at four years, 22.7 percent.
ACD is related to ECD loss due to the increased potential for surgical trauma as well as the proximity of the IMT to the endothelium following implantation. While early post-op losses attributed to shallow ACD do not appear to contribute to the chronic losses, they are permanent and thus potentially meaningful. Eyes with ACD less than three millimeters have the greatest losses at all time periods. ACD between 3 and 3.5 millimeters showed clinically significant less ECD loss, and the same held true for eyes with ACD greater than 3.5. Also, both the patients who experienced corneal decompensation in subsequent transplant had ACD of less than three millimeters.

Though the IMT was designed for two millimeters of corneal endothelial clearance and the selection criteria specified minimum ACD of 2.5 millimeters, no data was presented to demonstrate the suitability of the proposed minimum ACD.

Furthermore, there is evidence that sulcus placement of the haptic moves the device anteriorly, thus increasing the risk of corneal touch. Also, one eye was reported to have posterior capsular opacification (PCO) at 18 months, and two had visually significant PCO at 24 months. A needling procedure rather than YAG capsulotomy was used to address these two cases. The proposed labeling includes instructions for using a YAG through the periphery of the device, but this would require more bursts, more energy to the eye, and thus increase the risk of retinal detachment.

Turning to clinical effectiveness, mean preoperative visual acuity data indicates that most study subjects were categorized as legally blind. There are significant fluctuations in repeated measures of acuity in macular degeneration patients. 90.1 percent of implanted eyes were reported to show improvement of two lines or more in either distance or near vision; for

refractive lasers and phakic IOLs such a change denotes a clinically significant change in visual function, but these eyes are not diseased or considered low vision. Repeatability coefficients for young normal patients are significantly smaller than those found in a study of low vision and uncorrected normal vision subjects. Data from the PMA indicate that those with severe and profound vision loss showed greater than three lines improvement. Comparing predicted postop acuities with those actually reported, the IMT resulted in somewhat better distance acuities, but the near acuities did not measure up to the predicted values. The safety and effectiveness for visual acuity are based on unadjusted baseline acuity rather than on that predicted based on the magnification. There was no data on how much of the improvement was a result of the cataract removal alone. Also, the preoperative acuity measurements were not adjusted.

Items five through nine of the VFQ deal with independent mobility. Mean scores were provided, but FDA requested frequency analyses for each rating within each category assessed. The number of subjects reporting extreme difficulties decreased by one year, but those reporting little and moderate levels of difficulty increased.

The rehabilitation program was directed by family members and did not use any direct performance measures, though progress was checked at scheduled visits. Studies have shown that vision rehabilitation with specific individualized goals directed by specialists yields a high rate of sustained success. Studies also show that those with low vision are at increased risk of falls. Eight fall-related adverse events occurred during the trial. Training by a low vision specialist (Orientation & Mobility Specialist) should be required.

It is proposed to use the IMT both monocularly and binocularly, but binocular use presents serious concerns, including noncorrespondence of overlapping fields, severe field restriction in the dominant eye, motion discrepancies, and possible suppression of the fellow eye. No symptoms of discordant motion information were reported, and this suggests there is suppression of either the IMT image or the entire fellow eye. Since the IMT has more prominent motion stimulus, it is more likely the fellow eye is being suppressed. The result would be a severely constricted visual field.

Hollington T. Lu, M.S., M.A., Mathematical Statistician, Division of Biostatistics, Office of Surveillance and Biometrics, began the statistical review, which focused on the 24 month

database. He showed a scatter plot of the ECD counts over time, both for IMT and fellow eyes. ECD percent loss from baseline to three months is 20 percent. The yearly average loss is 5.4 percent. Looking at ECD loss of more than ten percent, at eight months 59 percent of IMT but only five percent of fellow eyes has such losses. No fellow eyes had more than 20 percent loss, but 12 percent at three months and 19 percent at 24 months of IMT eyes had at least 50 percent loss. Turning to ECD and surgical order, the sponsor states that ECD has a linear effect on ECD percent change from baseline to three months, but not after that, and surgical order did not show statistically significant difference.

Yao Huang, M.S., Mathematical Statistician, Division of Biostatistics, Office of Surveillance and Biometrics, noted that at baseline ECD values were similarly distributed for both eyes. For the fellow eye it is roughly constant, but for the IMT eye there is a large drop in the first three months, and ECD may continue to decrease at a lower rate. A mixed effect model was used to analyze the ECD data. Mean baseline ECD was 2466.89. IMT eyes dropped 169.81 per month for the acute period and 9.83 units per month during the chronic period. The fellow eyes lost 6.59 units per month, but that number is not statistically different than zero.

The question when ECD would fall to 1,000 cells cannot be answered because no data is available, and data extrapolations should be avoided as there is no certain knowledge regarding the pattern of ECD loss. However, FDA projected the mean ECD at four years by assuming the chronic linear trend continued. By the mixed effect model at the end of year four projected mean ECD count for IMT eyes would be significantly lower than for fellows. Quartile analysis was also performed to further look at the relationship between baseline ECD and long term ECD projection. There was no statistically significant difference in either age or ECD across the strata of baseline ECD.

According to the sponsor's data, a subject with baseline ECD of 2,500 and ACD of 2.5, the probability that ECD will be lower than 1,000 is .149, and for one with ECD of 1,600 and ACD of 2.5, the probability is .644.

For IMT eyes, ECD decreases throughout the study, and the rates of loss in both the acute and chronic periods are significantly different than zero, and in both periods the rates are

significantly different between the IMT and fellow eyes. This suggests there is a significant treatment effect.

Dr. Weiss asked about the slide which showed that because of the magnification, an improvement of less than 1.4 lines or 2.3 lines of acuity would actually equal a loss of greater than 2.0 lines of acuity. She questioned what percentage of patients who seemed to have improved, actually got worse.

Bruce Drum, Ph.D., Division of Ophthalmic Devices, acknowledged that FDA was also troubled by that but that the sponsor had not provided the information. Dr. Weiss then asked whether patients may have perceived an improvement that could not be measured. Dr. Drum said that using adjusted acuity provided more of an indication of device effectiveness but noted that patients were more concerned with using the preoperative acuity.

Dr. Palta asked about use of an exponential or log scale. Ms. Huang said that it was actual ECD count, not a log scale. Dr. Palta noted that some of the literature fits either the exponential or double exponential, which would result in slightly lower percentages of ECD loss. Ms. Huang said the results had been compared with the literature and that the parameter estimates were close, even the extrapolation. Dr. Palta asked whether the random effects were assumed on the intercept or slope, and Ms. Huang said yes. Dr. Palta asked whether the percentages showed were from the same model, and Ms. Huang said they were and added that based on the model she had predicted the ECD count for each patient. Dr. Palta then asked about the confidence interval or precision for the predictions. Ms. Huang responded that as the sample size was relatively large, there was pretty high precision in parameter estimation, but that the distribution of ECD counts itself was rather wide and that there was a high proportion of eyes with counts of 1,000 or lower among IMT eyes.

Dr. Ferris returned to the issue of expected improvement and suggested it would have been surprising if all eyes had achieved the theoretical improvement given the condition of the eyes. Dr. Drum said the other factor was possible measurement error in that the preoperative measurement may have been on a good day and thus better than their average acuity. Similarly patients who showed strong improvement may have had low preoperative measurements. Dr. Ferris then asked whether multiple training sessions might improve one's ability to perform well on some of the tests, and Dr. Drum agreed with that view. Dr. Lepri

noted that another possible explanation for the larger increases in acuity may have resulted from the fact that a majority of the patients had cataracts prior to surgery.

Dr. Szlyk asked whether visual function on the VFQ was similarly divided by visual acuity level. Dr. Lepri responded that those with severe and profound vision loss showed larger proportional improvement on the VFQ. Dr. Weiss asked for clarification of the level of cataract and whether visually significant cataract was an exclusion criterion. Dr. Lepri said the indication required patients to have cataract, and the sponsor indicated that they had misspoken regarding exclusion of visually significant cataract. Dr. Lepri said that over 90 percent had nuclear cataracts but did not recall data on the degree of nuclear or cortical opacification and agreed that the absence of that data made it impossible to determine the effect of the device versus that of the cataract removal.

Mr. Bunner asked about the unknown problems of examination and treatment of IMT implanted eyes. Dr. Lepri responded that FDA was concerned about the use of devices typically used to examine the retina but noted that the sponsor had addressed some of those concerns in stating they would dilate the pupil and use a Volk lens with the slit lamp. Other methods were not addressed.

Dr. Mathers asked whether laser treatment of the retina would be precluded, and Dr. Lepri said it was unknown given the lack of data.

PANEL, PRIMARY REVIEWS

Dr. Grimmett began his review by noting that other studies tracking corneal endothelial health had 500 or more eyes whereas the current PMA began with 206 and had only around 150 at 24 months. Eight eyes had PCO. Two required a needling procedure, and Dr. Grimmett pointed out that most practicing ophthalmologists have no idea how to do a needling. A YAG can't be done through the optic of the IMT, and a circular YAG around it is suggested, but in animal models it required significantly more bursts than a standard capsulotomy. There is a question whether the high number required increase the risk of retinal detachment. Furthermore, a circular capsulotomy may result in a very large vitreous floater.

Transient IOP elevations seen in a quarter of patients are likely related to viscoelastic, and sulcus placed haptics can narrow or close the angle. However, gonioscopy data was not included with the application. Pigment deposits on the IMT may be a sign of chronic iris chafing with possible pigment dispersion syndrome. Several routine eye care issues, including angiograms, peripheral retinal exam and laser, and argon laser, are negatively affected by the IMT. And it is unknown whether retinoscopy or optical coherence tomography (OCT) is possible in an IMT-implanted eye.

Turning to effectiveness, Dr. Grimmett noted that the patient, with family assistance, was largely responsible for implementing the rehabilitation program. Investigators noted that rehabilitation was a key factor to a successful outcome, and some said it should be mandatory. Dr. Grimmett advocated it as a labeling requirement.

Moving to the corneal endothelium, Dr. Grimmett noted that the IMT was similarly proximate to the cornea as an angle supported phakic IOL. No data on optic endothelial distances was presented in the PMA. Ultrasound data presented today showed a central distance of 2.54 and peripheral distance of 2.18, but the range of ACDs was not known. Furthermore, the seven eyes presented are not likely to be representative of the entire cohort. It is important to know where the IMT sits in eyes with the narrowest ACDs. Two published cases with one haptic in the sulcus and the other in the capsular bag had distances similar to the first generation angle supported phakic IOLs, which were unsafe and led to marked endothelial cell loss. Two corneal transplants were performed in the study, and both eyes had ACDs of less than three millimeters and a sulcus haptic. Based on the limited data available, the IMT endothelial distance is barely sufficient and some eyes probably have dangerous proximity, and Dr. Grimmett recommended that ultrasound data be provided.

The FDA's model for endothelial cell loss is supported by published studies of large incision cataract surgery, but the sponsor's three slope model is not supported by literature, and there is no morphometric data to justify the choice of breakpoints. It is important to know whether the loss is due to remodeling due to surgical trauma or due to a chronically stressed endothelium. A critical deficiency in the PMA is the total lack of morphometric data, which is known to be a better indicator of endothelial health than ECD data, and which could ensure that the coefficient of variation and percent hexagonals return to baseline levels in a reasonable period of time.

There were also no measurements of the peripheral endothelium, and the superior cornea in particular may act as a reserve for remodeling but may also be damaged by the large superior incision required for implantation. Similarly, in spite of its relevance to corneal endothelial function, pachymetry was neither routinely measured postop nor reported in the PMA. Looking at the exclusion criteria, there were relevant confounding factors such as diabetes and contact lens use that were not specifically excluded. Chronic inflammation, a known factor in endothelial damage, is caused by the IMT and is greater than for standard cataract surgery, and Dr. Lane reported it was the most notable complication in the phase one trial. Based on inflammatory and pigment deposits on the IMT, chronic inflammation cannot be ruled out as a cause of ongoing damage to the endothelium. Turning to ACD, there was a trend of higher cell loss in shallower chambers, and it would be prudent to exclude narrow ACDs. The study closely matched known loss rates for both pseudophakic and unoperated eyes.

The acute ECD loss in the study was 21 percent compared with 12 percent for large incision cataract surgery, and the yearly chronic loss was around six percent compared with 2.5 percent for large incision cataract surgery. Furthermore, the chronic loss for IMT eyes was ten times the rate for unoperated eyes.

Looking at minimum cell density to ensure corneal clarity, a 60 year old patient would need a preoperative count of 3,984 in order to die with a count of 800, the threshold identified for potential corneal edema, 22 years later, but the average 60 year old will only have around 2,700 cells. After age 70 it might be expected to find patients with high enough counts that ECD will not fall below 800 before death. However, merely using the mean will not adequately describe adverse corneal outcomes that may affect a significant number of eyes. If the chronic loss rate does not slow down, an epidemic of corneal edema may result not long after implantation. Even under the best conditions, that is, entry cell count of 2,500, seven to fifteen percent of eyes may be at risk of corneal edema at year four.

Returning to the lack of morphometric data, if the data turn out to be consistent with an unstable endothelium the device would be unsafe and not approvable. If the data is consistent with ongoing remodeling, then it would be conceivable that the chronic rates would slow down.

Dr. Grimmett suggested restricting the device to ACD of 3 millimeters or more, minimum entry cell count of 2,500, and minimum entry age of 75, or alternatively creating a sliding scale of baseline cell counts for given ages based on life expectancy tables. New surgeons should start with deep anterior chambers. Labeling should state that the device is unsafe when placed in the sulcus. Future specular photographs should include a peripheral measurement, particularly from the superior cornea.

Dr. Bressler began his review by acknowledging that the sponsor had attempted to address a major public health problem. Study design limitations include the lack of controls, which eliminates the possibility of determining the visual acuity improvement due to the IMT itself rather than to removal of the cataract and rehabilitation. The VFQ results are also limited in that scores can improve over time even with no treatment or the improvement could be due simply to cataract removal and rehabilitation. In the absence of controls, the results were not overwhelming enough to be able to conclude anything about effectiveness.

Another problem is that the analysis omitted the eleven eyes which did not have successful implantation. While the sponsor stated they were giving the results of successfully implanted IMTs, the protocol merely said they would look at the results of those undergoing implantation. Another limitation is the lack of twelve month follow up for the eight eyes from which the device was eventually removed. Dr. Bressler suggested it would important to look at the effect on the overall data set if those lost to follow up had bad outcomes.

As to the modified activities of daily living questionnaire, there was no explanation of how it had been modified or validated. Dr. Bressler was also concerned whether PCO was systematically looked for in follow up. There was also a lack of information on possible vestibular problems and on total additional procedures performed, which could have been compared to historical controls of how many are done following cataract surgery.

A seventeen percent ECD loss was chosen a priori at the start of the trial, and it was not met. There was also insufficient information on YAG capsulotomy. Dr. Bressler also expressed serious concern over the theoretical risk related to magnetic resonance imaging (MRIs) and suggested further consideration of another model that would avoid that issue given the uncertainty that the indicated population would require an MRI at some time following

implantation. He also suggested that the five point change in VFQ score might be somewhat low to be clinically significant.

The sponsor's recommendation that no treatment for AMD be required for the past six months may be problematic given new treatments for choroidal neovascularization which might benefit patients. It is unknown whether fluorescein angiography can be performed and reliably interpreted to identify disease. There was a lack of information on the seemingly changing definition of macular degeneration used as well. Also, it would be helpful to have information on how the near visual acuity was calibrated.

Dr. Brilliant began with a discussion of age-related macular degeneration. Magnification is used to help patients function, and there are four approaches: relative size, projection, relative distance, and angular, which is use of a telescope. The magnification used is determined based on the patient's own goals. For general goals the target acuity is 20/40 or 20/50. The IMT is a Galilean refracting telescope, and the advantages over external telescopes are cosmetic and lack of the weight problem associated with prolonged use of an external scope. Dr. Brilliant was concerned that only sixty percent of the subjects achieved a doubling of their acuity using the IMT. Also, if a patient's vision decreases such that more magnification is needed, additional surgery, with the costs and risks entailed, may be required.

Apparently subjects' specific visual concerns were not considered in candidate selection. One problem is that the questionnaires showed distance vision activities improved less than general or near vision, but a telescope is mainly intended to improve distance vision. Another concern is that subjects were apparently not shown external telescopes with greater than 2.2x magnification prior to implantation which may have provided better results. Dr. Brilliant stated that in reality only patients with acuity from 20/80 to 20/140 would truly benefit from the IMT based on the two magnifications available. The telescope may improve acuity in other patients, but not necessarily to the extent that the person can function on certain tasks. Turning to near acuity, the target would again be in the range of 20/40 to 20/50 based on the size of standard print. However, reading individual optotypes on a chart is much easier than reading words and sentences. When the dioptric power of the telemicroscope required for reading is determined, it is apparent that the same power could be produced with a pair of reading glasses without the telescope. Further, the patient would probably adjust better, and the field of view would be much larger than in an equivalent power telemicroscope.

The sponsor argued that because of the reduced central vision of the study subjects less than the theoretical improvement should be expected, but Dr. Brilliant stated that patients should and do improve as expected. When they do not, certain factors should be looked at to determine why. Dr. Brilliant was uncertain why the eye with worse acuity was implanted if best corrected vision was better than 20/200 in either eye. Assuming the fellow eye had enough peripheral field for mobility, maximum benefit would be achieved by implantation in the eye with better acuity. No binocular or binocular examination was performed prior to surgery, and there was no evaluation of whether the fellow eye would be suppressed when using the telescope as needed for mobility.

The telescope is focused for three meters rather than optical infinity, so to see at a greater distance a minus concave spectacle lens would be needed, and it would decrease the magnification and thus the visual acuity. Dr. Brilliant questioned how much astigmatism would be enough to exclude a potential candidate.

The IMT may be statistically successful for general vision improvement and may help those with 20/70 to 20/140 acuity

PANEL DISCUSSION

1. Please discuss the following regarding endothelial cell density:

a. The primary safety endpoint for this study was mean ECD ≤ 17%. The sponsor reported mean percentage change in ECD from baseline to 12 months of 25.3%. Does the panel believe that the study design has provided sufficient data to address the long-term ECD safety issue associated with this device?

The panel generally agreed that there was neither enough data nor enough analysis of the data provided and that the sponsor did not reach the established safety endpoint. One panel member pointed out that FDA should work with industry to define endpoints as this seems to be a recurring problem and also that ECD alone may not tell the entire story as some patients with a count of 500 cells still have very clear cornea. Some panel members suggested moving forward with an increased age requirement and increased anterior chamber depths until there is more data on those currently enrolled.

b. Please discuss whether these data provide a reasonable assurance of the safety of the IMT for the proposed indicated population. Please comment on whether any safety concerns regarding loss of ECD can be mitigated by limiting the intended population based on the following:

- **anterior chamber depth**
- **minimum preoperative endothelial cell density at entry**
- **age**
- **other**

One panelist said that if the panel thought there was reasonable efficacy that these criteria could be modified to mitigate safety concerns. One panel member said there should be more studies first. Another panel suggested that perhaps data on survival of eyesight should be used instead of life expectancy due to the potential effect of other eye problems. One panel member worried about the learning curve in the larger population of surgeons.

2. With regard to the long-term follow-up of eyes with the IMT:

a. Performing YAG capsulotomy through the center of the IMT can damage the lenses. The sponsor has proposed needling or a new method for performing capsulotomy through the periphery of the telescope. Please discuss whether such management of posterior capsular opacification provides a reasonable assurance of safety for patients with the IMT.

Panel members did not feel there was reasonable assurance of safety in doing a YAG procedure given that it had not been performed during the course of the study. One panel member was unsure how successful needling would be. Another panel member expressed confidence in the ability of ophthalmologists to figure out how to do a capsulotomy on these patients.

b. Please discuss your concerns, if any, regarding posterior segment examination and treatment of eyes with the IMT.

Panel members expressed concern regarding the risk of patients developing choroidal neovascularization and that the ability to do angiography would be limited by the device. Another concern identified was how to approach a retinal detachment in these patients.

Limitation of future treatment options is a significant issue. One panel member suggested adding diabetes as an exclusion factor.

3. The proposed safety and effectiveness criteria for visual acuity are based on unadjusted preoperative acuity rather than on acuity predicted from the magnified postoperative retinal image.

a. Please discuss whether the unadjusted preoperative acuity baseline is adequate for evaluation of safety and efficacy of this device.

b. Please provide any recommendations on what additional analyses are needed, if any, to evaluate visual acuity measures of safety and effectiveness.

Panel members expressed concern regarding the lack of controls and the lack of information on the cataracts present preoperatively. One panel member suggested there should be stratification of the results based on whether the implanted eye had better or worse acuity, analysis of any preoperative improvement as a result of the minimal rehabilitation training done preoperatively, and an analysis of the visual acuity change in the unoperated eye which might act as a control. Another member suggested looking at the refraction or correction used for the baseline visual acuity. Several panel members were in favor of using adjusted preoperative acuity rather than the magnified adjusted vision. One member pointed out that the loss of luminance with the IMT would reduce vision in macular degeneration patients. Some panel members argued that using the fellow eye as a control would be potentially flawed. One panel member suggested that some data might be gleaned from fellow eyes that also underwent cataract surgery and IOL implantation.

4. In the IMT trial, the rehabilitation program was implemented by the subject with assistance from the family. Professional orientation and mobility and reading instruction were not provided. No validated methods of measuring the outcomes of training were utilized in this study.

a. Please discuss whether you believe that the functional safety and effectiveness of the IMT has been adequately addressed with the vision rehabilitation program and the quality of life questionnaires used in this study.

b. If not, please discuss modifications to the vision rehabilitation program recommended for patients that receive the IMT.

There was agreement among some panel members that rehabilitation should be required both pre and post-op. One panel member did not feel comfortable requiring something that had not

been demonstrated to be helpful. One panel member was in favor of requiring professional rehabilitative services but worried about the availability of those services. The FDA clinical reviewer. Dr. Bernard Lepri, clarified that their concern was with orientation and mobility training following surgery due to the safety concerns with the elderly patient population.

5. Regarding the rehabilitation training program to teach IMT subjects to use their implanted eyes for central vision tasks and their fellow eyes for peripheral vision tasks:
a. The sponsor has provided no direct performance measures showing that subjects can learn to shift binocular suppression from one eye to the other at will. Please discuss whether the available evidence provides reasonable assurance that IMT subjects can safely and effectively use their IMT eye for central vision and their fellow eye for peripheral vision.
b. Please provide any recommendations you may have for modifying the instructions for dealing with binocular rivalry and suppression problems.

One panel member said it would depend on the patient and that it would be wise to identify those that would not be able to shift binocular suppression from one eye to the other prior to implantation. Another member suggested there were ways to study this by making the fellow eye a component of future studies. One member suggested a longer trial period with the external telescope along with monitoring of patients' progress with the trial. The chair acknowledged that patients' use of central versus peripheral vision would be complex. One panel member thought the issue had been indirectly addressed to some degree by the activities of daily living questionnaire. Another panelist addressed the issue of double vision and thought the subjects must be closing one eye when reading given the difference in acuity between the two eyes.

6. The sponsor proposed the following indication for the IMT:
The IMT implant is indicated for use in adult patients with bilateral, stable moderate to profound central vision impairment due to macular degeneration. Patients selected for implantation should meet the following criteria:
• 55 years of age or older with bilateral, stable central vision disorders resulting from age-related macular degeneration as determined by fluorescein angiography, and evidence of cataract.
• Distance BCVA between 20/80 and 20/800, and adequate peripheral vision in one eye (the non-targeted eye) to allow for orientation and mobility.

• Achieve at least a five-letter improvement on the ETDRS chart in the eye scheduled for surgery using an external telescope.
• Show interest in participating in a postoperative visual rehabilitation program.
Please discuss whether you believe that the data presented in the PMA support reasonable assurance of safety and efficacy of the IMT for the proposed indication. If not, please comment on whether your concerns can be mitigated by modifying the following:
a. Age
b. Preoperative VA
c. Definition of minimal acceptable peripheral vision
d. Type of AMD
e. other

Some panel members agreed that the age should be increased. One panel member wondered about plasticity and the ability of older patients to adapt to the device. Other panel members expressed concern about predicting how long individual patients will survive. The Chair stated that life expectancies were increasing and might increase dramatically in the coming years. Panel members thought that those with lower preoperative visual acuity might be more appropriate but also acknowledged that those with better preoperative VA would be much more likely to improve to a level of functionality, although not many actually did. One panel member reiterated his point that those with very low VA would not be improved to a functional level with the magnification of the IMT and thought such patients should be given the opportunity to try external scopes with magnification more in line with their level of VA. Another panel member suggested that any improvement might be satisfactory for such patients and that all patients should be given options other than the invasive surgery required for the IMT. One panel member suggested that some of these factors would be more appropriately addressed as part of informed consent and pretreatment evaluation. An FDA representative stated that since subjects were not given the option of telescopes with very high magnification that their level of satisfaction was not reflective of the options. A panel member said it is hard to predict when choroidal neovascularization would reactivate and that bilateral geographic atrophy would be the least problematic.

Regarding peripheral vision, the FDA representative clarified that they were asking about patient selection. Some panel members said it was difficult to assess peripheral vision in those with central vision loss but felt there should be a general feeling that a patient has

around thirty degrees in each quadrant. One panel member suggested a test could be devised to assess functional ability related to peripheral vision as opposed to the actual dimensions of the field.

OPEN PUBLIC HEARING

No members of the public came forward to speak.

FDA CLOSING COMMENTS

The FDA had no closing comments.

SPONSOR CLOSING COMMENTS

Dr. Gordon said that the slides presented by Dr. Grimmett showing anterior segments on ultrasound biomicroscopy (UBMs) were of a previous model of the device. She expressed regret that the sponsor had not had an opportunity to write responses to the panel questions. Dr. Stulting addressed the issue of the effect of cataract surgery on vision improvement. He stated that the lenses of the patients were clear enough to allow for examination of the retina and fluorescein angiography and that none of the patients had sufficiently advanced cataracts that cataract surgery alone would have been recommended. Also, thirteen fellow eyes also had cataract surgery, and the average gain was only one line of acuity. Randomization would be difficult to achieve. Regarding the outcome of eyes in which implantation was aborted or the device removed, Dr. Stulting said that mean postop acuities were within .02 logMAR units of the preoperative values; eight were within one line; two lost two or more lines; and two eyes gained two or more lines.

Regarding the issue of theoretical improvement, Dr. Stulting stated that the increased acuity and functional vision were real and that patients were not concerned whether they achieved the theoretical improvement. Advantages of the IMT include increased visual field, ability to scan without moving the head, and that a patient's hands are not required to support the device. The data supports approval under limited circumstances, which would allow for collection of long term data to address the questions addressed.

Dr. Heier said that examination of the retina could be done through the telescope or the periphery and that retinal detachment could hopefully be treated using peripheral viewing.

With regard to patients with lesions, the sponsor does not advocate use of the device in patients being treated with ranibizumab.

VOTING

Ms. Thornton read the voting options. Dr. Bressler moved that the device application be found not approvable. Dr. Grimmett seconded the motion.

Dr. Bressler appreciated the data provide on the missing subjects but thought those who underwent implantation needed to be looked at in depth to see if the ten percent vision loss safety margin was surpassed. He said there was not enough information to establish effectiveness. As to safety, he was concerned that the ECD loss was greater than what was thought to be safe.

Dr. Grimmett was most concerned with the chronic cell loss. He thought it was likely due to remodeling and would decrease over time but said there was insufficient data to know. He hoped morphometric data could be analyzed to determine whether patients returned to baseline and that it might allow the sponsor to justify their choice of break points.

Dr. Palta felt the discussion of mitigation of risk had altered the risk benefit ratio enough to make the vote somewhat difficult.

Dr. Ferris said that without controls he could not know the magnitude of the benefit. He wanted another voting option whereby the sponsor could do limited marketing and a concurrent randomized clinical trial.

Ms. Thornton stated that in the event of a vote of not approvable the panel would be asked what was necessary to make it approvable. Dr. Ferris expressed hope that the concept would not be abandoned due to the high cost of conducting another clinical trial.

Dr. Weiss said there was not valid scientific data showing reasonable safety and efficacy. She asked the primary reviewers to identify data that might be gleaned from the current study to establish effectiveness.

Dr. Bressler said they needed to look at all the missing data to make sure it does not increase the loss of vision beyond the established safety threshold. He said it would be difficult to address issues with the VFQ and the visual acuity information without controls.

Dr. Grimmett said his primary concern was with safety, not effectiveness.

Ms. Niksch said it was unfortunate that the sponsor had not had an opportunity to fully address the comments of the primary reviewers.

Dr. Heuer asked whether the panel could recommend the device be approvable pending morphometric data, and Dr. Mathers said they were supposed to go on available data.

Dr. Weiss asked whether the device could be voted approvable with the condition that morphometric data be obtained from existing photographs.

Dr. Eydelman said it would be difficult to make such a recommendation pending data that wasn't collected, Whether or not the sponsor has it or not, the FDA has not been privy to it. She stated that if would be helpful if the panel made a recommendation pending data that we know exists.

Dr. Haik asked if the technology would simply disappear if it was not approved. Ms. Niksch clarified that it would be a long process to design a randomized control trial.

Dr. Eydelman said that if the panel voted a recommendation of not approvable, they could then address what data they think the sponsor should provide to bring the application into approvable status.

Dr. Huang said that the device was efficacious given that it is equivalent to using an external telescope and that the safety issues were related to the surgery, which was not much worse than previous cataract surgery.

Dr. Mathers called the vote. The motion passed with ten supporting and three voting against the motion. The Chair did not vote.

FINAL PANEL COMMENTS

Ms. Thornton stated for the record that Dr. Ferris had to leave and would not be available for final comments.

Dr. Palta felt that with the conditions discussed the benefits would just barely exceed the risks.

Dr. Grimmett said that the available data did not support the safety of the device. He thought the sponsor could garner morphometric data from existing photographs, lending credibility to the theory of prolonged remodeling and showing appropriate cell loss rates.
Dr. Weiss said the scientific evidence presented did not show reasonable safety due to the endothelial cell loss rate and that the lack of data on confounding variables meant that reasonable efficacy also was not demonstrated. She hoped the complete data set would be made available.

Dr. Heuer said the safety issue was a major problem and thought the morphometric analysis as well as a more thorough understanding of the chronic cell loss was needed.

Dr. Edrington was also concerned with the data on the endothelial cell counts.

Dr. Szlyk felt they had sufficient data to approve the device with certain conditions.

Dr. Haik said he very much wanted to approve the device but that based on the evidence presented and the opinion of the primary reviewers he had supported the motion.

Dr. Brilliant did not feel the safety and efficacy data was sufficient.

Dr. Sunness regretted that she had to support the motion. She was primarily concerned with the safety issues, but with regard to efficacy she wanted to see data on the fellow eye.

Dr. Bressler agreed that the scientific data provided did not establish safety and efficacy. He felt there was a need for controls and regretted that had not been known from the start. He thought the design would have been okay had there been an overwhelming response.

Dr. Burns was primarily concerned with the safety but also thought it would be nice to have reassurance that a retinal exam could be performed in these patients. In terms of efficacy, he was swayed by the fact that the patients were satisfied.

Dr. Huang voted against the motion because he did not think extrapolation of the existing data could be compared with the life table analysis.

Dr. Mathers was most concerned with the safety issue. He thought it was somewhat efficacious and hoped the sponsor would be able to make the device approvable.

Ms. Niksch pointed out that the study was conducted under an approved IDE after negotiations with FDA. She commended the sponsor for their innovative device and hoped for continued collaboration to bring the device to the market.

Mr. Bunner said that with informed consent he thought the device could be a choice for consumers.
Dr. Mathers asked the panel to give some guidance to the sponsor and FDA on how the issues of safety and effectiveness raised by the panel may be addressed in future submissions to the Agency.

Dr. Burns hoped the sponsor could limit the age range and resubmit data without having to undergo another trial.

Dr. Haik expressed his concern as to why neither morphometric data nor multiple specular micrographs were taken. He also thought the sponsor should have been accounted for the possibility of future treatment options.

Dr. Sunness said that patients with bilateral geographic atrophy with choroidal neovascularization were a good group and that people with geographic atrophy in one eye and cytomegalovirus (CMV) in the fellow eye were not. She also thought it would be reasonable in patients with large disciform scars unlikely to be eligible for treatment.

Dr. Bressler expressed concern over the development of efficacy data due to reported that are coming out regarding changes in the NEI-VFQ. He suggested that this needed to be taken into account in the AMD population. Also the emerging information visual acuity changes related to scars following cataract surgery is to be noted. He suggested that maybe a small controlled trial could be done to establish efficacy.

Dr. Mathers hoped that panel members might make further suggestions at a later time.

ADJOURNMENT

Dr. Mathers adjourned the meeting at 5:28 p.m.

I certify that I attended this meeting of the Ophthalmic Devices Advisory Panel Meeting on July 14, 2006, and that these minutes accurately reflect what transpired.

_____

Sara M. Thornton
Executive Secretary
I approve the minutes of this meeting
as recorded in this summary.

_____

William D. Mathers, M.D
Chair
Summary prepared by
Eric C. Mollen
1323 Rhode Island Ave., N.W.
Washington, D.C. 20005
eric.mollen@gmail.com