Laboratory Response to Salmonella Outbreaks

Steven Musser, Ph.D.
Director, Office of Regulatory Science, CFSAN
FDA Science Board

October 31, 2008

Types of testing

- Routine surveillance
- Tracking/identifying sources of outbreaks (molecular epidemiology)
- Assessing and validating new and novel technology, protocols and methods

All types of testing require a different level of certainty

How much discrimination is needed?

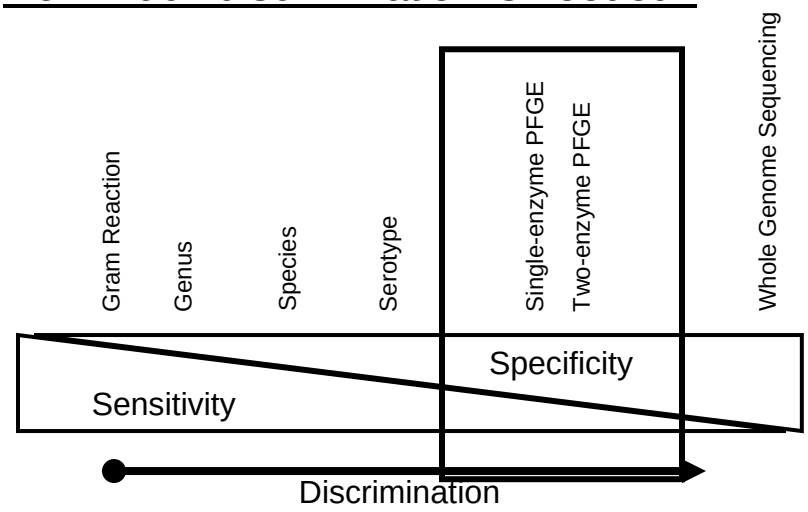

U.S. Food and Drug Administration
Protecting and Promoting Public Health
www.fda.gov

Not all microorganisms represent the same level of difficulty

- *E. coli* vs. *Salmonella* (one serotype vs. thousands)
- Good molecular techniques exist for *E. coli* O157:H7
- *E. coli* O157:H7 is genetically distinct from other *E. coli* pathovars, while many *Salmonella* are highly homologous

Salmonella species and subspecies

- *Salmonella enterica*

S.enterica subsp. *enterica* (I)	1531 (~99%)
S.enterica subsp. *salamae* (II)	505
S.enterica subsp. *arizonae* (IIIa)	99
S.enterica subsp. *diarizonae* (IIIb)	336
S.enterica subsp. *houtenae* (IV)	73
S.enterica subsp. *indica* (VI)	13

- *S. bongori* 22

U.S. Food and Drug Administration
Protecting and Promoting Public Health
www.fda.gov

Salmonella serovars

- *Salmonella enterica*

  S. enterica subsp. *enterica* (I) 1531 (~99%)

  – Serovars
    - Typhimurium, Paratyphi, Newport, Saintpaul, Heidelberg, Enteriditis, Poona…. and more than 1000 others
    - The absence of specific molecular probes for each serovar adds a significant amount of time to outbreak investigations

Sample Throughput

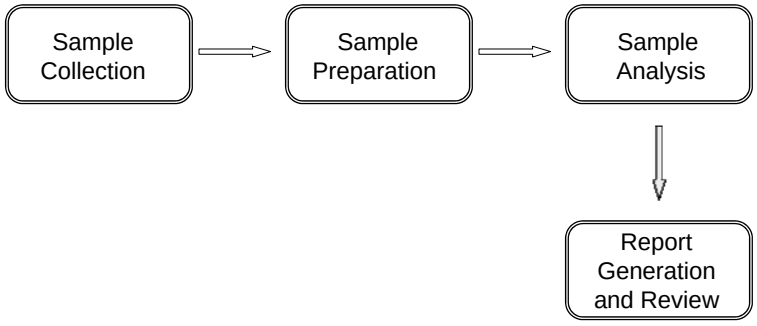

U.S. Food and Drug Administration
Protecting and Promoting Public Health
www.fda.gov

Testing for Microbial Contamination

- Currently not possible to test every tomato or leaf of lettuce
- Microbial contamination is not uniform
- An enrichment step is necessary

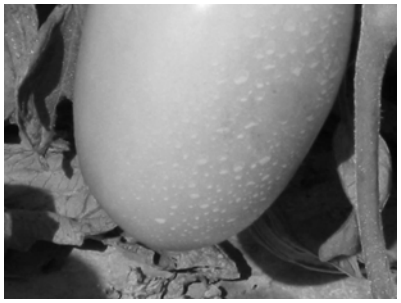

Need for Enrichment

- Low levels of pathogens
- Competitive microflora
- Biofilms
- Pathogens are injured and don't often grow without enrichment

U.S. Food and Drug Administration
Protecting and Promoting Public Health
www.fda.gov

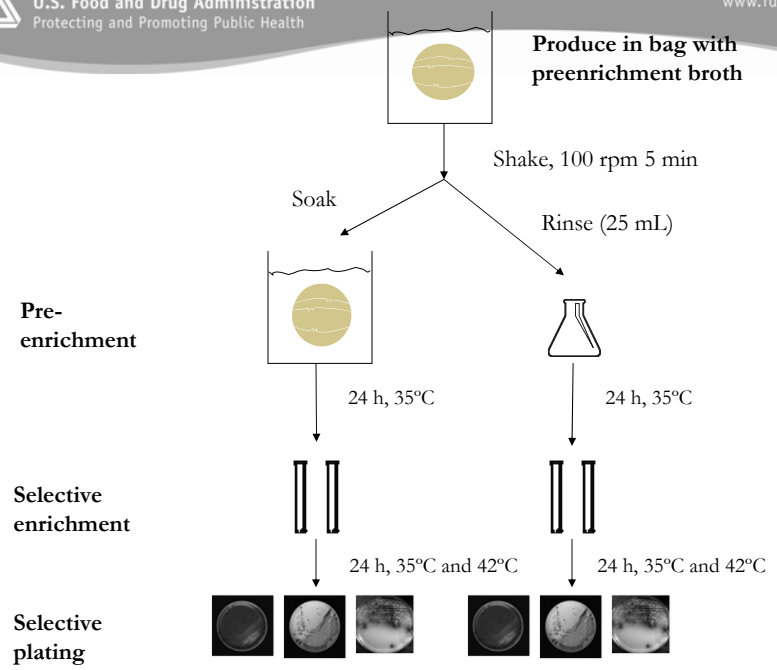

Soak versus Rinse

	Soak*	Rinse
Cantaloupes	367/540[a]	24/540
Mangoes	94/240	12/240
Tomatoes	89/420	38/420

[a] ***Salmonella*-positive test portions per total number of test portions examined.**
* **Significantly more effective than rinse ($p < 0.05$).**

U.S. Food and Drug Administration
Protecting and Promoting Public Health
www.fda.gov

Current Salmonella Detection, Isolation, Typing

Pre-enrichment from Sample	(1 day)
↓	
Selective Enrichment	(1 day)
↓	
VIDAS Immunofluoresence Assay (+/- Salmonella)	(1/2 day)
↓	
Plating on Selective Agar	(1 day)
↓	
Confirmation on Selective Agar Slants	(1 day)
↓	
API, VITEK Legacy Identification	(1 day)
↓	
Serological Confirmation	(3-5 days)
↓	
PFGE	(2-3 days)

Total: 10-14 days

(PFGE) Pulsed-Field Gel Electrophoresis

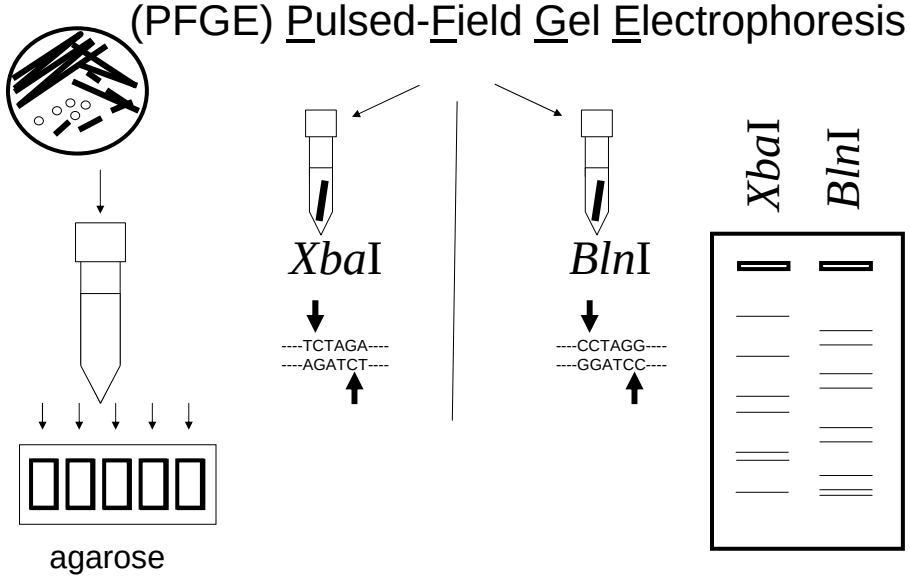

U.S. Food and Drug Administration
Protecting and Promoting Public Health
www.fda.gov

PulseNet

- A network of state, local, federal, and international agencies.
- Coordinated by the CDC in Atlanta.
- Participants perform PFGE (**P**ulsed-**F**ield **G**el **E**lectrophoresis) of foodborne, disease-causing bacteria.
- PulseNet provides validated protocols, allowing standardized data sharing between participants.
- DNA “fingerprints,” or patterns, are submitted electronically to a dynamic database at the CDC. These databases are available on-demand to participants, allowing for rapid comparison of the patterns.

Clinical outbreaks are linked to foods by identical PFGE patterns

PFGE-XbaI

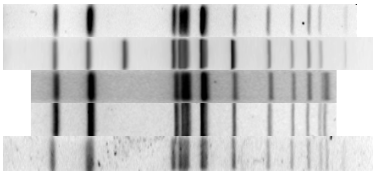

JEGX01.0004	NC and VT (eggs?)
JEGX01.0005	UT food
JEGX01.0018	GA hospital
JEGX01.0021	SC buffet restaurant (eggs)
JEGX01.0056	GA hospital (eggs)

U.S. Food and Drug Administration
Protecting and Promoting Public Health
www.fda.gov

Technology improves workflow

Enrichment or Selective enrichment	1- 2 days
↓	
RT PCR	2-3 hours
↓	
Presumptive positive Salmonella	
↓	
Isolate colonies on Selective agar	1 day
↓	
Bio-Plex to identify serovar	1 day
↓	
PFGE	2-3 days
	Total: 5-8 days

Bio-Plex platform

- Luminex technology licensed by Bio-Rad
- 96-well plate-based suspension analysis system
- Bead Technology
- Flow Cytometry
- Cost - $40-60K

U.S. Food and Drug Administration
Protecting and Promoting Public Health
www.fda.gov

Salmonella serotyping method for Bio-Plex

- Based on combinations of O and H antigen PCR products
- Designed for top 100 most commonly occurring human pathogen serotypes of *Salmonella enterica*
- Assay takes 45 minutes
- Validated for clinical specimens in 17 state public health labs
- We now have at least 4 units in ORA labs
- Currently producing enough beads through contract with Radix

Investigational techniques

- Ribotyping
- Multilocus variable number tandem repeat analysis (MLVA)
- Optical arrays
- SNP typing using Bio-Plex and pyrosequencing
- Whole genome sequencing
- Others

IBIS T5000 Biosensor

- A hardware platform that analyzes PCR products and links them to organisms or virulence and antibiotic resistance makers

- Assay Kits or “kits”: PCR-based reagent kits supplied by Ibis to be used on the Ibis T5000 platform

Platform capabilities

- Broad identification of all microbes
  - Bacteria, Viruses, Fungi, Protozoa
  - No culturing, No DNA sequencing
- Mixed populations of microbes
  - Quantitative
- High resolution genotyping, strain identification and antibiotic resistance determination
- Cost effective, rapid, high throughput, fully automated
- Database of over 1,000 infectious microbes known to cause disease in humans*
  - 217 viral species
  - 538 bacterial species
  - 307 fungi
  - 66 parasitic protozoa

U.S. Food and Drug Administration
Protecting and Promoting Public Health
www.fda.gov

New Method Requirements

- The method or technology must be appropriate for use in foods
- New technology must consider the entire continuum of food testing (sample collection through analysis)
- Provide reproducible and comparable results across laboratories
- Provide a greater level of performance (sensitivity, specificity, etc) than is currently available
- Address food sampling issues and the need for enrichment