NeoMend ProGEL™ SURGICAL SEALANT

Caution: Federal Law restricts this device to sale by or on the order of a physician.

INSTRUCTIONS FOR USE

NeoMend ProGEL™ SURGICAL SEALANT

Caution: Federal Law restricts this device to sale by or on the order of a physician.

INSTRUCTIONS FOR USE

TABLE OF CONTENTS

1.0 DEVICE DESCRIPTION ……2

2.0 INDICATIONS AND USAGE..……...2

3.0 CONTRAINDICATIONS…….3

4.0 WARNINGS…… 3

5.0 PRECAUTIONS……3

6.0 ADVERSE EVENTS…….3

7.0 CLINICAL STUDY……...4

8.0 PATIENT COUNSELING INFORMATION……..14

9.0 CLINICIAN USE INFORMATION…… 14

10.0 PATIENT INFORMATION……...17

11.0 H0W SUPPLIED……18

12.0 STORAGE……...18

\\\DC - 030452/000001 - 2721169 v1

1.0 DEVICE DESCRIPTION

The NeoMend Inc. ProGEL™ Surgical Sealant (the "Sealant") (**Figure 1**) is comprised of a single use, sterile chemistry component kit [polyethylene-glycol based cross-linker, functionalized with succinate groups ((PEG(SS) 2)), and Human Serum Albumin - USP] and a single use, sterile applicator kit (push rod, tip assembly, applicator housing, a vial of sterile water for injection - USP, and a syringe). Both the cross-linker and albumin components are individually contained within hermetically sealed cartridges.

FIGURE 1 ProGEL™ SURGICAL SEALANT
(STERILE WATER AND SYRINGE NOT SHOWN)

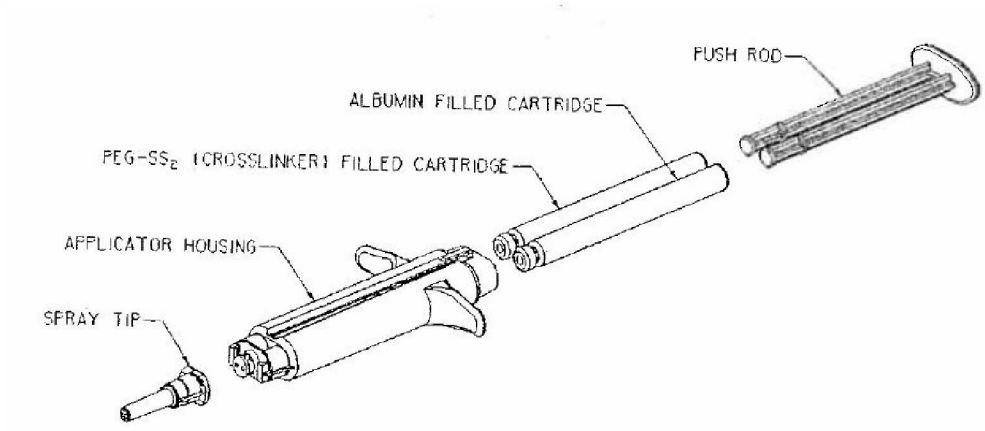

The applicator is designed to mix the two solutions and deliver the Sealant as a spray to the target site. Once mixed, the Sealant polymerizes to form a cross-linked, clear, flexible hydrogel matrix that adheres to the lung tissue. The polymerization process does not require peripheral equipment, such as light sources or heating elements to allow for proper device function.

When the Sealant contacts lung tissue, it conforms to the tissue by adhering to the microstructure of the lungs. The Sealant stays in place and allows for the expansion and relaxation of the lung tissue until it biodegrades (less than 30 days). Based on information from animal experiments, the hydrogel first swells, loses mechanical strength and then undergoes breakdown, primarily by hydrolysis. As the Sealant biodegrades it is cleared primarily through the kidneys or locally metabolized.

2.0 INDICATIONS AND USAGE

The Sealant is intended as an adjunct to standard tissue closure techniques for sealing or reducing air leaks (ALs) incurred during pulmonary surgery.

3.0 CONTRAINDICATIONS

- Do not use the Sealant in patients who have a history of an allergic reaction to Human Serum Albumin.

4.0 WARNINGS

- The safety and effectiveness of the Sealant has not been evaluated in humans less than 18 years of age, nor in pregnant or nursing women.

5.0 PRECAUTIONS

- Ventilation of the target area should be stopped temporarily if possible to reduce air leakage from the targeted sites and to minimize tissue movement during sealant application. If the patient needs ventilation, a reduced tidal volume is recommended.
- Sealant use has not been studied with other sealants or hemostatic materials.
- Use of additives (*e.g.*, antibiotics) with the Sealant has not been studied.
- The safety of the Sealant has not been evaluated in patients receiving more than 30 mL of the Sealant.
- Keep the applicator tip approximately 5 cm (2 in) away from target area to avoid creating bubbles in the sealant material during application. Bubbles may compromise the adherence and/or mechanical properties of the Sealant.
- Do not use rehydrated cross-linker after 20 minutes, as the performance of the Sealant may be compromised.
- The Sealant is intended for single use only. Do not resterilize or reuse.
- Inspect sterile package and seal prior to use. Do not use if sterile package or seal are damaged or open. Discard unused material.

6.0 ADVERSE EVENTS (AEs)

Table 1 presents the incidence of adverse events reported by greater than 2% of subjects in either treatment group. The most frequently reported AEs, with an incidence greater than 10% in Sealant and Control groups were: fever, atrial fibrillation, dyspnea, and constipation. Additional AEs reported only in the Control group at an incidence greater than 10% were: nausea, anemia, tachycardia, hypotension, vomiting and pneumonia. There were no statistically significant differences ($p > 0.05$) in the incidence of AEs between the Sealants and Control groups. There was one AE (a pneumothorax three weeks post surgery) considered by the investigator to be an unanticipated adverse device effect due to the temporal relationship of the event with the use of the Sealant.

\\\DC - 030452/000001 - 2721169 v1

Table 1 Incidence of AEs Reported by > 2% of Subjects by Treatment Group

Preferred Term	Sealant (N=103)	Control (N=58)
Fever	22 (21.4%)	12 (20.7%)
Fibrillation, Atrial	12 (11.7%)	7 (12.1%)
Dyspnea	12 (11.7%)	10 (17.2%)
Constipation	11 (10.7%)	6 (10.3%)
Nausea	10 (9.7%)	7 (12.1%)
Confusion	8 (7.8%)	5 (8.6%)
Pneumothorax	8 (7.8%)	5 (8.6%)
Hypotension	8 (7.8%)	6 (10.3%)
Anemia	8 (7.8%)	6 (10.3%)
Pain	7 (6.8%)	4 (6.9%)
Subcutaneous Emphysema	7 (6.8%)	5 (8.6%)
Tachycardia	7 (6.8%)	6 (10.3%)
Death	5 (4.9%)	4 (6.9%)
Oliguria	5 (4.9%)	1 (1.7%)
Vomiting	5 (4.9%)	7 (12.1%)
Pneumonia	5 (4.9%)	7 (12.1%)
Pulmonary Infiltration	4 (3.9%)	0 (0.0%)
Chest Pain	4 (3.9%)	1 (1.7%)
Pleural Effusion	4 (3.9%)	3 (5.2%)
Urinary Retention	3 (2.9%)	0 (0.0%)
Ileus	3 (2.9%)	0 (0.0%)
Tachycardia, Supraventricular	3 (2.9%)	0 (0.0%)
Abdominal Pain	3 (2.9%)	0 (0.0%)
Arrhythmia	3 (2.9%)	0 (0.0%)
Extrasystoles	3 (2.9%)	0 (0.0%)
Coughing	3 (2.9%)	1 (1.7%)
Hypoxia	3 (2.9%)	1 (1.7%)
Renal Failure, Acute	3 (2.9%)	1 (1.7%)
Atelectasis	2 (1.9%)	2 (3.4%)
Postoperative Wound Infection	2 (1.9%)	2 (3.4%)
Pruritus	1 (1.0%)	2 (3.4%)
Delirium	1 (1.0%)	2 (3.4%)
Hypertension	1 (1.0%)	2 (3.4%)
Angina Pectoris	1 (1.0%)	2 (3.4%)
Hemoptysis	1 (1.0%)	3 (5.2%)

7.0 CLINICAL STUDY

7.1 STUDY OBJECTIVES

The primary objective of this study was to evaluate the safety and efficacy of the Sealant to seal or reduce intraoperative air leaks (IOALs) in patients undergoing a thoracotomy for pulmonary resection, decortication, or biopsy and thereby reduce the incidence of postoperative air leaks (POALs). Performance of the Sealant, when used adjunctively with standard techniques, was compared with performance of standard techniques alone (sutures, staples, cautery) for closing ALs.

7.2 STUDY DESIGN

This was an open-label, randomized (2:1 ratio), stratified, controlled, multi-center study with a total of 275 subjects enrolled and 161 subjects randomized into the trial (103 treatment and 58 control). Subjects were stratified according to their pulmonary function status at screening (i.e., percent predicted FEV1 <40%, >40%). Subjects who had at least one clinically significant IOAL (≥ 2 mm in size) following surgery, as determined by an air leak test, were randomized within the study. All subjects provided written consent prior to being enrolled.

7.2.1 CONTROL THERAPY

Subjects randomized to the control group received standard sutures, staples or cautery devices supplied by the hospital for thoracic surgery and utilized per individual investigator judgment or preference. Additional surgical techniques (*e.g.*, pleural flap, pneumoperitoneum) could be used for persistent ALs, as appropriate.

7.2.2 STUDY ENDPOINTS

The primary efficacy endpoint was the proportion of subjects who remained air leak-free following surgery, through the one month follow-up period or duration of hospitalization, whichever was longer. The presence of ALs was assessed by daily observation of air leakage from the chest tube drainage system, and subjects were also monitored for any recurrence of ALs after chest tube removal.

The secondary efficacy endpoints were:

- Proportion of IOALs in each group that were sealed or reduced, as demonstrated by the air leak test, prior to completion of the surgery;
- Proportion of subjects in each group who were air leak-free immediately following surgery as measured by the presence of ALs from the chest tube at the first postoperative time point once the subject was in the recovery room;
- Duration of POALs measured from the time of surgery until the AL sealed;
- Duration of chest tube placement; and
- Duration of hospitalization.

7.2.3 SAFETY MEASURES

The measures of safety included both clinical and laboratory assessments. The clinical assessment was based on the investigators' evaluation of adverse events related to the device that were reported during the postoperative hospitalization through the one month follow-up period. The laboratory assessment of safety was based primarily on two immunologic assays: the lymphocyte proliferation assay

\\\DC - 030452/000001 - 2721169 v1

(LPA), which is an in vitro measure of generalized lymphocyte reactivity, independent of antibody type or level; and an enzyme-linked immunosorbent assay (ELISA) that detects the presence of circulating TgG antibodies directed against the Sealant. The ELISA was used as a specific marker for humoral immunity. Both assays were performed preoperatively and at one month postoperatively. The results of the Sealant group were compared with the Control group to determine whether there was any significant change in responses.

7.3 DEMOGRAPHIC CHARACTERISTICS

Table 2 presents the demographic characteristics of the study population. There were no significant differences between treatment groups for any demographic characteristic.

TABLE 2. Demographic Characteristics

Demographic Characteristic		Sealant (N=103)	Control (N=58)
Gender N (%)	Male	66 (64.1%)	36 (62.1%)
	Female	37 (35.9%)	22 (37.9%)
Age (years)	Mean	63.6	65.9
	SD	13.6	11.1
	Range	18-86	42-85

7.4 Medical History and Clinical Risk Factors of Interest

Table 3 presents medical history and clinical risk factors of interest in the study population. Subjects in both the Sealant and Control groups were similar with respect to medical history and clinical risk factors.

Table 3 Medical History and Clinical Risk Factors

Risk Factor	Sealant (N=103)	Control (N=58)	P-value[a]
Hypertension	40 (38.8%)	26 (44.8%)	0.506
Immunosuppression	5 (4.9%)	3 (5.2%)	1.000
Hx of MI	11 (10.7%)	10 (17.2%)	0.329
Coronary Artery Disease	21 (20.4%)	19 (32.8%)	0.090
Renal Disease	13 (12.6%)	5 (8.6%)	0.604
Hx of Neurological Event	7 (6.8%)	5 (8.6%)	0.758
Diabetes	13 (12.6%)	7 (12.1%)	1.000
CHF	4 (3.9%)	3 (5.2%)	0.703
COPD	35 (34.0%)	16 (27.6%)	0.481
Previous Thoracic Surgery	15 (14.6%)	10 (17.2%)	0.657
Radiation Exposure-Chest	9 (8.7%)	5 (8.6%)	1.000
Chemotherapy	9 (8.7%)	2 (3.4%)	0.330

\\\DC - 030452/000001 - 2721169 v1

Risk Factor	Sealant (N=103)	Control (N=58)	P-value[a]
Steroid Use	4 (3.9%)	3 (5.2%)	0.703
Smoking			
Never	20 (19.4%)	11 (19.0%)	1.000
Current	18 (17.5%)	11 (19.0%)	
Former	65 (63.1%)	36 (62.1%)	
Pack Years			
N	78	46	0.055
Mean ± SD	59.8 ± 36.0	47.6 ± 27.3	
Median	50.0	40.5	
Minimum	1	1	
Maximum	175	120	
Recent Weight Loss	13 (12.6%)	9 (15.5%)	0.637
Alcohol Dependency			
No	82 (79.6%)	44 (75.9%)	0.691
Current	6 (5.8%)	7 (12.1%)	
Past	15 (14.6%)	7 (12.1%)	
Prior Cancer	36 (35.0%)	25 (43.1%)	0.316
ECOG Score			0.465
Fully active	72 (69.9%)	38 (65.5%)	
Ambulatory	23 (22.3%)	18 (31.0%)	
In bed <50%	2 (1.9%)	0 (0.0%)	
Bedridden	1 (1.0%)	0 (0.0%)	
Missing	5 (4.9%)	2 (3.4%)	

[a] Wilcoxon rank sum test or Fisher's exact test.

7.5 PRIMARY DIAGNOSIS AND OPERATIVE SUMMARY

Table 4 presents a summary of primary diagnoses. The primary surgical diagnoses for subjects in both the Sealant and Control groups were primary tumor, followed by metastatic tumor.

Table 4 Primary Diagnoses

Parameter	Response	Sealant N=103	Control N=58
Primary Diagnosis	**Primary Tumor**	70 (68.0%)	42 (72.4%)
	Metastatic Tumor	19 (18.4%)	8 (13.8%)
	Benign Tumor	6 (5.8%)	3 (5.2%)
	COPD/Bronchitis/Emphysema	3 (2.9%)	0 (0.0%)
	Other	5 (4.9%)	5 (8.6%)

Table 5 presents a summary of operative characteristics. The most frequent type of surgery was lobectomy for both groups. In both the Sealant and Control groups, the posterolateral thoracotomy was the most frequently used surgical approach. The

operative characteristics were similar between the Sealant and Control groups for the individual parameters evaluated.

Table 5 Operative Summary

Parameter	Response	Sealant N=103	Control N=58
Types of Surgery	**Bilobectomy**	4 (3.9%)	1 (1.7%)
	Lobectomy	55 (53.4%)	34 (58.6%)
	Segmentectomy	5 (4.9%)	4 (6.9%)
	Single Wedge	12 (11.7%)	7 (12.1%)
	Multiple Wedge	8 (7.8%)	2 (3.4%)
	Lobectomy with Wedge(s)	10 (9.7%)	5 (8.6%)
	Lobectomy/Segmentectomy/Other	5 (4.9%)	2 (3.4%)
	Lung Volume Reduction	1 (1.0%)	1 (1.7%)
	Other	3 (2.9%)	2 (3.4%)
Surgical Approach	**Median Sternotomy**	1 (1.0%)	1 (1.7%)
	Posterolateral Thoracotomy	85 (82.5%)	45 (77.6%)
	Anterolateral Thoracotomy	3 (2.9%)	6 (10.3%)
	Mini-thoracotomy	13 (12.6%)	6 (10.3%)
	Other	1 (1.0%)	0 (0.0%)
Lymphadenectomy	**Partial**	30 (29.1%)	14 (24.6%)
	Complete	43 (41.7%)	32 (56.1%)
	Not Done	30 (29.1%)	11 (19.3%)
Pleural Adhesions	**Yes**	53 (51.5%)	30 (51.7%)
	No	49 (47.6%)	27 (46.6%)
	Missing	1 (1.0%)	1 (1.7%)
Extent of Adhesions[1]	**Minimal**	28 (52.8%)	14 (46.7%)
	Extensive	22 (41.5%)	15 (50.0%)
	Unspecified	3 (5.7%)	1(3.3%)
No. of Chest Tubes	**1**	19 (18.4%)	7 (12.1%)
	2	83 (80.6%)	48 (82.8%)
	≥3	1 (1.0%)	3 (5.2%)
Time in OR (min)	**N**	102	58
	Mean ± SD	226.7 ± 61.2	236.8 ± 61.5
	Median	225.5	225.5
	Minimum	115	145
	Maximum	455	430
Time to Skin Closure	**N**	91	50
(min)	**Mean ± SD**	156.8 ± 54.9	165.0 ± 62.6
	Median	151.0	143.5
	Minimum	52	81
	Maximum	355	387

[1] Percents based on the number of subjects who had pleural adhesions rated at the time of surgery.

7.6 IOAL CHARACTERIZATION SUMMARY

Table 6 presents the number of IOALs per subject. A total of 318 individual ALs were tracked, with 210 in the Sealant group and 108 in the Control group. The number of IOALs per subject, before intervention, was significantly greater in the Sealant group than in the Control group: 68% of the Sealant subjects had two ALs or more compared with 48% of the Control subjects.

TABLE 6. Number of IOALs Prior to Closure

Parameter	Response	Sealant N (%)	Control N (%)	P-value[a]
Total Subjects		103	58	
Total IOALs		210	108	
IOAL/Subject	1	33 (32.0%)	30 (51.7%)	0.0051
	2	46 (44.7%)	14 (24.1%)	
	3	16 (15.5%)	6 (10.3%)	
	4	2(1.9%)	5(8.6%)	
	5	4 (3.9%)		
	>5	2(1.9%)	3(5.2%)	
	Mean	3.0	2.0	0.1345
	SD	9.7	1.4	
	Median	2.0	1.0	

[a]P-value associated with Wilcoxon Rank Sum Test for comparing Sealant and Control groups or Fisher s Exact Test for categorical data.

7.7 PRIMARY AND SECONDARY EFFICACY ENDPOINTS

Table 7 presents results of the primary efficacy endpoint. The percentage of subjects who remained air leak-free through the 1 MFU visit was significantly greater in the Sealant group 36/103 (35%) compared with the Control group 8/58 (14%) (p=0.005).

TABLE 7. Primary Endpoint Results

Air Leak Status Through 1MFU Visit	Sealant N (%)	Control N (%)	P-value[a]
No POAL	36 (35.0%)	8 (13.8%)	0.005
With POAL	67 (65.0%)	50 (86.2%)	

[a]Logistic regression analysis comparing Sealant and Control groups for the primary endpoint analysis.

7.7.1 IOAL ASSESSMENT

Table 8 presents a summary of IOALs sealed. Of the 210 ALs tracked in the Sealant group, 77% were sealed after the application of Sealant compared with 16% of the 108 ALs in the Control group. IOALs were sealed in 71% of Sealant subjects compared with 10% of Control subjects following the final AL test. The differences between Sealant and Control groups were statistically significant (p <0.001) for both IOAL assessments.

Table 8. IOAL Closure Summary

Parameter	Response	Sealant N (%)	Control N (%)	P-value[a]
Sealed IOAL/Individual AL	No IOAL	161 (76.7%)	17 (15.7%)	<0.001
	<2 mm	23 (11.0%)	13 (12.0%)	
	2-5 mm	21(10.0%)	60 (55.6%)	
	>5 mm	5 (2.4%)	17 (15.7%)	
	Missing		1 (0.9%)	
Sealed IOAL/Subject	No IOALsMissing	73 (70.9%)	6 (10.3%)1 (1.7%)	<0.001
	With IOALsNo IOALs	30 (29.1%)73 (70.9%)	51 (87.9%)6 (10.3%)	
	MissingWith IOALs	30 (29.1%)	1 (1.7%)51 (87.9%)	

[a]P-value associated with Fisher's Exact Test for categorical data.

7.7.2 RECOVERY ROOM POAL ASSESSMENT

Table 9 presents a summary of ALs observed in the recovery room. Following surgery, subjects were transferred to the recovery room where chest tubes (CTs) were placed on suction and the subjects' air leakage was determined by observing air bubbles from the CT drainage system. A significant number of Sealant subjects were air leak-free at the recovery room observation period compared to

\\\DC - 030452/000001 - 2721169 v1

Control subjects. No ALs were observed in 54% of subjects in the Sealant group compared with 33% of subjects in the Control group.

TABLE 9. Summary of POALs in the Recovery Room

Observation Period	Response	Sealant N (%)	Control N (%)	P-value[a]
Recovery Room	No AL	56 (54.4%)	19 (32.8%)	0.002
	Occasional Infrequent Bubbles	30 (29.1%)	20 (34.5%)	
	Frequent Bubbles	7 (6.8%)	16 (27.6%)	
	Continuous Bubbles	8 (7.8%)	3 (5.2%)	
	Missing	2 (1.9%)	0 (0.0%)	

[a]P-value associated with Fisher's Exact Test of categorical data.

7.7.3 DURATION OF POALS

Table 10 presents a summary of POAL duration. Duration of POAL was defined as the first postoperative day (POD) when no AL was noted. The duration of POALs was comparable for both treatment groups with a majority of POALs lasting less than three days (median was two days in both groups). Ten (10%) subjects in the Sealant group and one (2%) subject in the Control group were discharged from the hospital with a Heimlich valve [the difference was not significant (p = 0.099)].

TABLE 10. Summary of POAL Duration

Duration of POALs (Days)	Sealant (N=101)	Control (N=56)	P-Value[a]
Mean	4.7	3.6	0.410
SD	6.8	3.9	
Median	2.0	2.0	

[a]P-value associated with Wilcoxon Rank Sum Test comparing Sealant and Control groups

7.7.4 DURATION OF CT PLACEMENT

Table 11 presents a summary of the duration of CT placement in number of postoperative days. The duration of chest tube placement was comparable for both treatment groups. The median duration of CT placement for both groups was five days.

TABLE 11. Summary of Duration of CT Placement

Duration of CT Placement (Days)	Sealant Group (N=100)	Control Group (N=55)	P-value[a]
Mean	6.8	6.2	0.679
SD	5.5	3.5	
Median	5.0	5.0	

[a]P-value associated with Wilcoxon Rank Sum Test comparing Sealant and Control groups.

7.7.5 LENGTH OF HOSPITAL STAY

Table 12 presents the length of hospital stay in days. The median length of hospital stay was significantly shorter for subjects in the Sealant group compared with subjects in the Control group (p=0.028). Additional analysis was performed to better understand this result, however contributing factors remain uncertain.

TABLE 12. Summary of Length of Hospital Stay

Duration of Hospital Stay (Days)	Sealant Group (N=98)	Control Group (N=55)	P-value[a]
Mean	7.1	8.6	0.028
SD	3.4	5.6	
Median	6.0	7.0	

[a]P-value associated with Wilcoxon Rank Sum Test comparing Sealant and Control groups

7.8 SAFETY RESULTS

7.8.1 HUMORAL AND CELL-MEDIATED IMMUNE RESPONSE

An ELISA was developed to detect antibodies to pulverized Sealant. Subject serum, collected pre- and postoperatively, was analyzed to determine serum antibody levels in response to the Sealant. Sera were tested at six dilutions (neat, 1:10, 1:100, 1:1000, etc.). The antibody response of a subject's postoperative serum was compared to their preoperative serum.

Of the 161 subjects (103 Sealant, 58 Control) randomized into the study, both pre- and postoperative serum samples were obtained from 71(69%) of the Sealant subjects and 37 (64%) of the Control subjects. Seventy (70) of the Sealant subjects and 36 of the Control subjects, showed no reaction to the Sealant. One (1) subject in each group had a postoperative serum level consistent with the formation of Sealant antibodies. In each case, the subject's preoperative serum also showed high values indicating that their serum contained antibodies that cross-reacted with the Sealant. Based on these results, it can be concluded that the use of the Sealant during surgery did not result in the formation of Sealant antibodies. No statistical analysis was performed on these data due to the limited number of positive responses to the assay.

The LPA was used to measure the proliferative response of peripheral blood

mononuclear cells to various concentrations of mitogens and antigens in pre- and postoperative whole blood samples. Cells were tested against a standard screen of mitogens (Con A, PHA, and PWM), recall antigens *(Candida* and Tetanus), and the Sealant using 2-5 concentrations of each mitogen and antigen. The mitogenic response indicated the cell population involved and whether it was impaired or stimulated by the presence of the Sealant. The cellular response to recall antigens indicated whether the Sealant had altered the cell's response to the antigenic stimulus. Testing against the Sealant as an antigen indicated cell sensitization.

Only subjects with pre- and postoperative samples were included in comparative analyses. There were 59 Sealant/34 Control for mitogen analysis and 69 Sealant/32 Control for recall antigen and Sealant analyses. The only significant difference was the Control group's lower preoperative value for Tetanus. Higher preoperative values in the Sealant group were not clinically meaningful since generated on blood prior to Sealant exposure. The cell-mediated immune response of the subjects in the Sealant group was not different from that of the Control group. These results indicate that the Sealant did not significantly alter the cell's response to antigenic stimuli.

7.8.2 SUBJECT DEATHS

Table 13 presents a summary of subject deaths. There were 5 deaths among subjects in the Sealant group and 4 deaths in the Control group. None of the deaths were considered by the investigators to be device related.

TABLE 13. Summary of Subject Deaths

Age/Gender	Day of Death	Relationship to Device	Cause of Death
Sealant			
69/Male	POPD7	Not Related	ARDS
82/Male	POD28	Not Related	Pneumonia
61/Male	POD10	Not Related	Acute Airway Obstruction or Pulmonary Embolism
66/Male	POD6	Not Related	ARDS & Multisystem Failure
65/Male	POD23	Not Related	ARDS & Multisystem Failure
Control			
80/Female	POD15	Not Related	Pneumonia
71/Male	POD22	Not Related	Atrial Fibrillation
82/Male	POD0	Not Related	Ventricular Fibrillation
67/Male	POD38	Not Related	Anoxic Brain Injury

7.8.3 SUBJECTS LOST TO FOLLOW-UP

Of the 161 subjects (103 Sealant and 58 Control) randomized into the study, 148 subjects completed the study. Of the 13 subjects who did not complete the study (1MFU information was not available), 9 died, 1 had a post-sealant lung

\\\DC - 030452/000001 - 2721169 v1

transplant, 1 had a post-sealant lobectomy of the treated lung, and 2 subjects were lost to follow-up. The per treatment distribution of these subjects was similar, with 8 (7.8%) in the Sealant group and *5* (8.6%) in the Control group.

8.0 PATIENT COUNSELING INFORMATION

The physician should consider the following points in counseling the patient about the Sealant:

- Discuss the risk/benefit issues associated with Sealant use.
- Discuss the fact that the Sealant contains a human blood component (albumin) that is prepared from pooled human venous plasma. Use of this product presents some risk of transmitting infectious agents. While this risk is deemed remote, it cannot be totally excluded. This also applies to pathogens that are as yet unknown.

The Human Serum Albumin (HSA-USP) used to manufacture the Sealant is U.S. Food and Drug Administration (FDA) licensed and is derived from plasma collected from donors who have been previously screened and tested according to the methods specified by the FDA. These methods have been designed to minimize the possibility that blood drawn from donors will contain communicable diseases or viruses such as hepatitis and HIV.

Precautions have also been designed into the manufacturing process of HSA-USP to assure the viral safety of the human albumin, including a validated viral inactivation step. The viral inactivation step holds the human albumin at 60°C for 10 hours. This procedure has been shown to effectively eradicate known viral pathogens (Erstad, BL, Pharmacother, 1996; 16:996-1001).

9.0 CLINICIAN USE INFORMATION

9.1 INSPECTION PRIOR TO USE — PRECAUTIONS

Inspect sealed, sterile packages before opening. Do not use Sealant after the "Expiration" date, as sterility or function may be compromised. If package and/or product integrity have been compromised (i.e., damaged package seal, or broken glass), do not use or resterilize the contents.

9.2 SEALANT PREPARATION

Practicing aseptic technique, open the sterile packages and pass their contents into the sterile field. Referring to the drawings on the following page, perform the following steps 1 through 9.

Step 1. Using the 2 ml syringe, draw 2 ml of sterile water into the syringe and express all air in the syringe (syringe and sterile water are provided in the Applicator Kit).

Step 2. Inject the 2 ml of sterile water into the cartridge containing the cross-linker (white powder provided in the Chemistry Kit).

Step 3. Mix the cross-linker cartridge contents by gently rocking the cartridge end to end (generally 1-2 minutes). The solution is ready for use when it contains no undissolved powder. Note: The Sealant should be used within 20 minutes after dissolving the cross-linker in water.

Step 4. With the nose of the applicator pointed up, load both cartridges into the twin-chambered applicator housing (without spray tip attached). Gently press the cartridges to seat them into place

Step 5. Insert the push rod into the openings in the rear of the cartridges.

Step 6. With the nose of the applicator pointed up, briskly flick it to free any air bubbles. Express the air by gently but firmly pushing up on the pushrod until the stoppers in each cartridge are aligned with one another. Take care to express as little fluid as possible during this process.

Step 7. Wipe the nosepiece with clean, sterile gauze to remove any liquid that may have been expressed with the air. Avoid mixing of components by not wiping from one aperture across the other.

Step 8. Place a spray tip on the nose of the applicator and rotate clockwise 1/4 turn until locked.

Step 9. The Sealant is ready for application. Refer to Section(s) “Target Site Preparation”, and “Sealant Application” for detailed information.

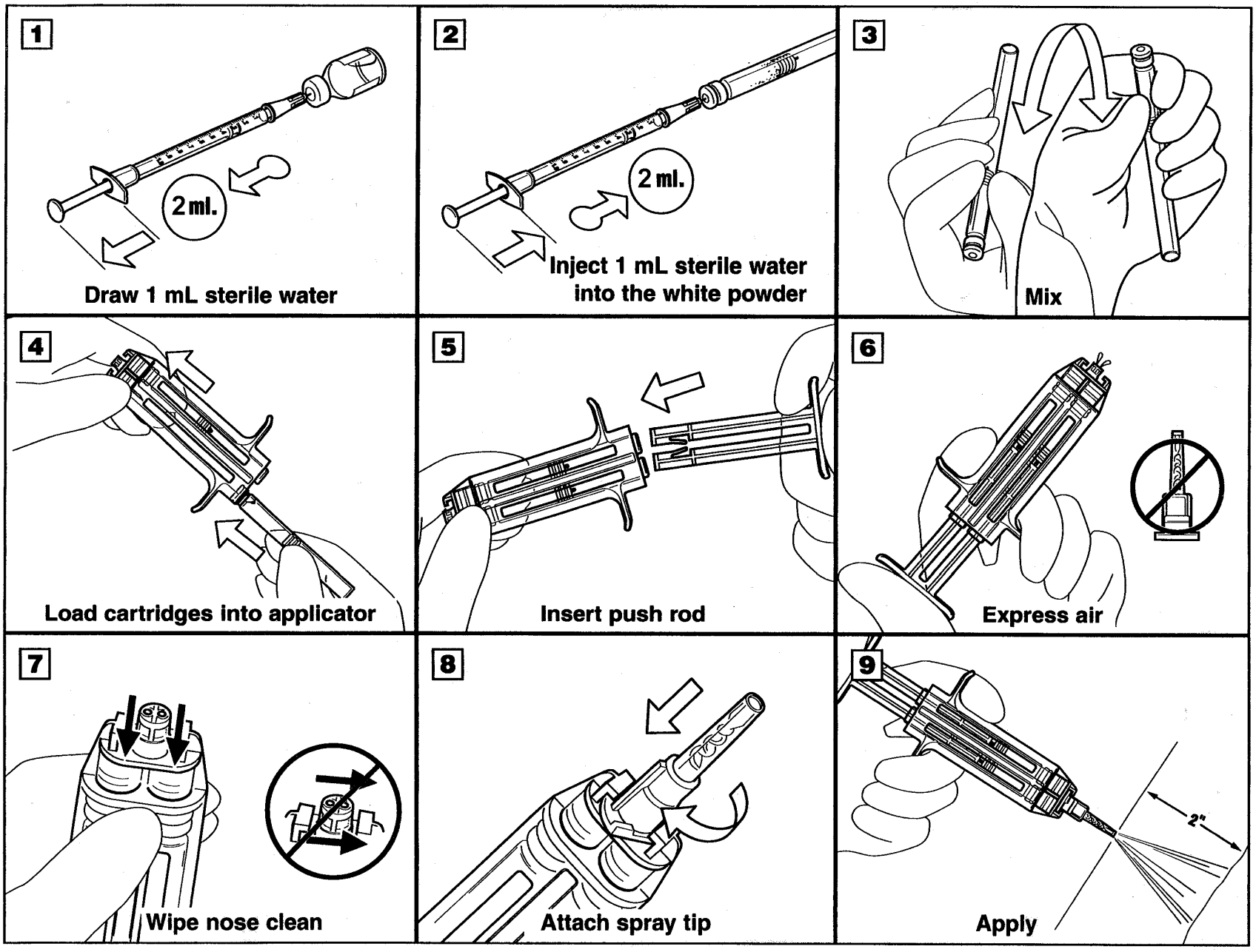

\\DC - 030452/000001 - 2721169 v1

9.3 TARGET SITE PREPARATION

Step 1. Rinse the area to be treated with saline and remove any pooled blood or blood clots with irrigation and/or suction. Blotting the target tissue area with a sponge or gauze prior to application of the Sealant is also suggested.

Step 2. Ventilation of the target area should be stopped temporarily, if possible, to reduce air leakage from the targeted sites and to minimize tissue movement during sealant application. If the patient needs ventilation, a reduced tidal volume is recommended.

9.4 SEALANT APPLICATION

Note: The unique design of the spray tip allows for Sealant application as a spray or as a stream (firm steady pressure on the pushrod will yield a spray, while gentle pressure will yield a stream). Interruption of the application for approximately 10 seconds may result in occlusion of the spray tip. If occlusion occurs, remove the spray tip, wipe the end of the applicator to remove any fluid, and attach a new spay tip (provided) onto the end of the applicator as described in step 8 of section 9.2 — Sealant Preparation, above.

Step 1. Select the target site to be sealed (Note: Each 4 ml applicator will supply enough sealant to cover an area 40 cm^2 (6 $in.^2$) and 1 mm thick.

Step 2. Hold the spray tip approximately 5 cm (2 in) from the tissue to be sealed, and apply firm, steady pressure to the pushrod.

Step 3. Maintain firm pressure on the pushrod and move the spray tip from side to side along the margin of the tissue surface to be sealed.

Step 4. The Sealant cures in 15-30 seconds, forming a flexible hydrogel. Two minutes after application, the Sealant's success in sealing the targeted site(s) can be tested using the saline submersion test or by irrigating the site to check for air bubbles.

Step 5. Sealant application may be repeated if necessary. If the applicator's contents are not entirely used in the first application, immediately remove the spray tip and wipe the nosepiece clean to prevent the remaining material from activating. A repeat application will require replacing the previously used spray tip with the additional tip provided in the kit.

Step 6. If more than one kit is needed, additional kits should be prepared and applied as recommended above.

10.0 PATIENT INFORMATION

No separate patient information regarding risks and benefits to the patient are provided. The Sealant is used as an adjunct to standard tissue closure techniques in pulmonary surgery. As such, the risks and benefits to the patient are similar to and, from a patient's perspective, a part of those interventional procedures.

11.0 HOW SUPPLIED

STERILE: The Sealant is supplied sterile. It is intended for single use only. Nonpyrogenic. Do not use if package is opened or damaged.

CONTENTS:
- One (1) - Chemistry Kit — e-beam sterilized
- One (1) - pre-loaded cartridge containing 2 ml of Human Serum Albumin solution
- One (1) - pre-loaded cartridge containing 260 mg of Polyethyleneglycol di-succinimidyl succinate ((PEG-(SS)2)) as a dried white powder.
- One (1) - Applicator Kit — ethylene oxide sterilized
- One (1) - 2 ml plastic syringe with 0.5 inch 26 gauge needle.
- One (1) - 5 ml vial of USP sterile water for injection ((Used for reconstitution of the PEG-(SS)2))
- One (1) - Applicator assembly
- Two (2) - Spray tips
- One (1) - Instructions For Use insert

12.0 STORAGE

The Sealant should be refrigerated between 2°C to 8°C (36°F to 46°F). Do not freeze. Note: Store the Sealant within the recommended temperature range. Failure to do so may result in poor product performance.

ProGEL is a Trademark of NeoMend, Inc.

NeoMend, Inc.
Irvine, CA 92618