Proposed Surgical Techniques

Generation I (IDE)

DRAFT

Medtronic
SOFAMOR DANEK

BRYAN® CERVICAL DISC SYSTEM

Single Level Surgical Technique

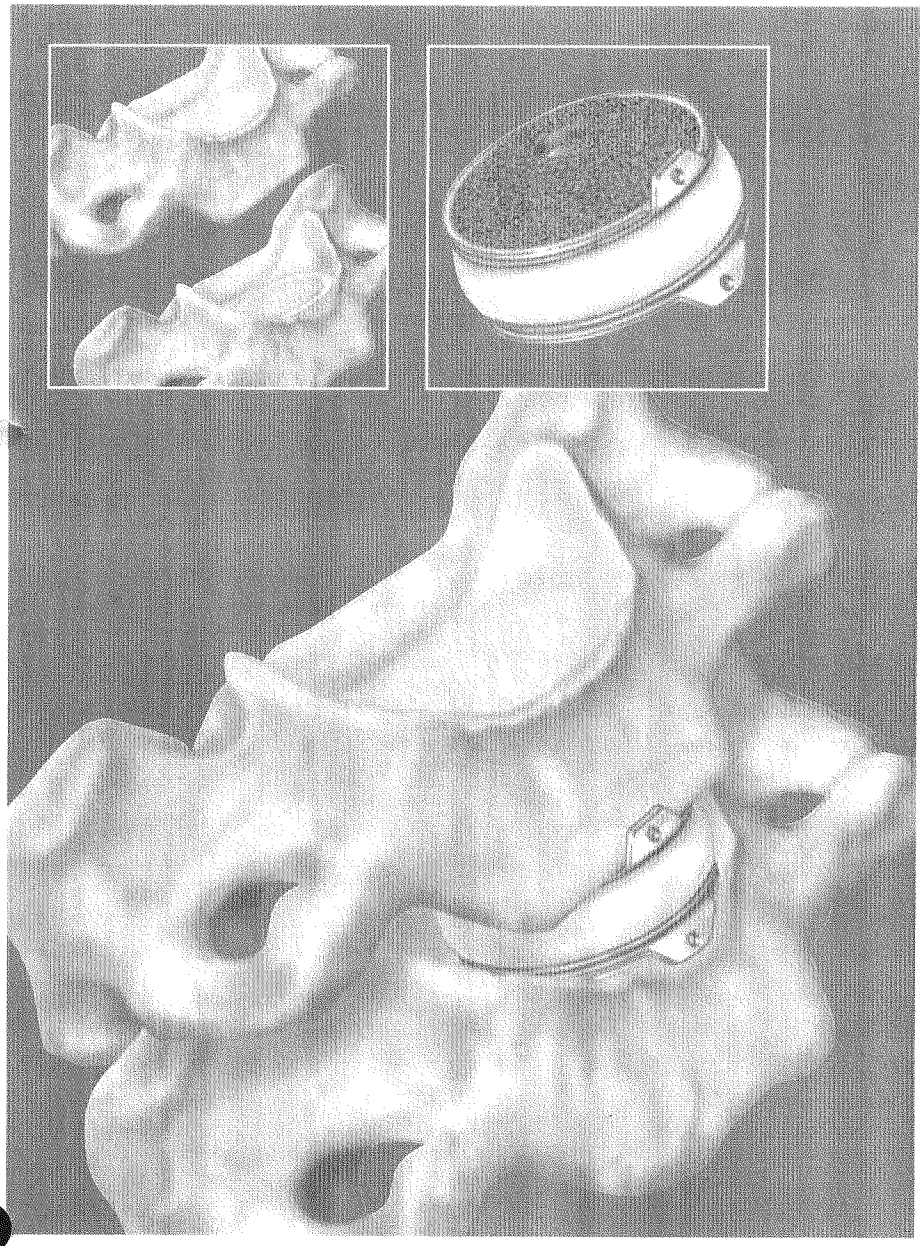

MICHELSON TECHNOLOGY AT WORK

Version A

CONFIDENTIAL

The surgical benefits of an anterior approach to the cervical spine in the management of the intractable symptoms and signs associated with degenerative disc disease are widely appreciated. Usually, the symptomatic functional spinal unit (FSU) is mobile and mechanically stable preoperatively. Anterior cervical disc fusion, though providing symptomatic relief, has the disadvantage of converting the operated segment to a non-functional spinal unit. As a result, increased stress takes place at adjacent levels, which may, in turn, result in hypermobility and subsequent mechanical instability and/or accelerated degeneration.

By maintaining all the surgical benefits of an anterior approach to the cervical spine and the symptomatic relief provided by decompression, but replacing the disc with a functional prosthesis, which provides for motion and elasticity rather than fusing, more favorable biomechanical conditions result.

A functional prosthesis must continuously provide balanced and integrated motion of the neck, a function critical to its durability, stability, safety, and effectiveness. To achieve this result, precision placement of the prosthesis is mandatory. Thus, specialized instruments are as key to short- and long-term outcomes as the prosthesis itself. In addition, the experience and expertise of the operating surgeon remain essential.

Biomechanical, animal, and clinical investigations have been performed on the BRYAN® Cervical Disc System and the results are an implant and instrumentation system that is worthy of your evaluation. The following pages describe and illustrate the placement of the BRYAN® Cervical Disc at C5-C6.

Patient Preparation 3
Preoperative Procedures . . . 3
Patient and Fluoroscope Unit Positioning . . . 4
Attachment of Retractor Frame . . . 6
Retractor Blade Positioning . . . 8

Discectomy 9
Target Disc Excision . . . 9
Excess Bone and Tissue Removal . . . 10
Distraction of Vertebral Bodies . . . 11

Alignment – Measurement 12
Transverse Centering . . . 12
Sagittal Centering . . . 13
Dual Track Milling Guide Placement . . . 14
Caudal Anchor Post Placement . . . 16
Cephalad Anchor Post Placement . . . 17

Alignment – Size Verification 19
Milling Depth Determination . . . 19
Burring Depth Verification . . . 20

Implantation 22
Burring . . . 22
Milling . . . 24
Distractor Placement . . . 26
Prosthesis Preparation . . . 27
Prosthesis Placement and Procedure Completion . . . 28

Product Ordering Information 29

Surgical Tips 30
Drive System Options . . . 30
Burr Attachment . . . 31
Dual Track Milling Guide Placement . . . 31
Burring . . . 32
Milling . . . 32
Implantation . . . 32

Using a computed tomography (CT) or magnetic resonance image (MRI) obtained so that the slices are parallel to the vertebral body endplates, determine the smaller of the two vertebral body endplates at the target disc space. The use of a CT image is preferred. Do not include spurs or ridges that will be removed in the subsequent burring and milling processes. Determine the magnification factor of the image using the **BRYAN® Cervical Disc Template Set** (Figures 1A, 1B). Choose the prosthesis template corresponding to the measured magnification factor, and follow the instructions on the template to select the prosthesis size (Figure 1C).

The case illustrated in this technique is a C5-C6 disc replacement utilizing a 16mm prosthesis with a disc angle of 10 degrees.

Fig. 1A

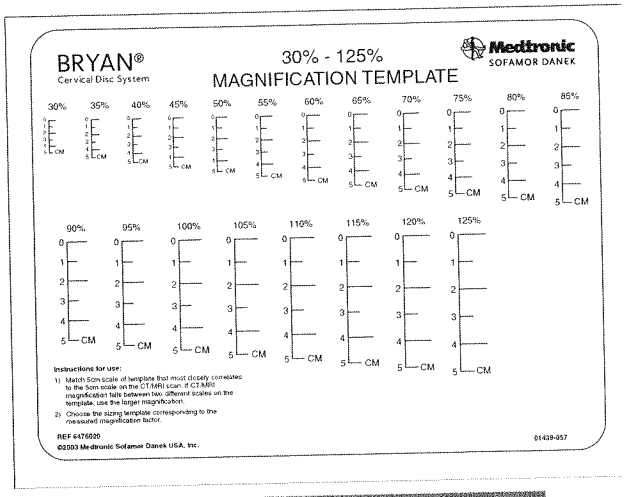

Fig. 1B

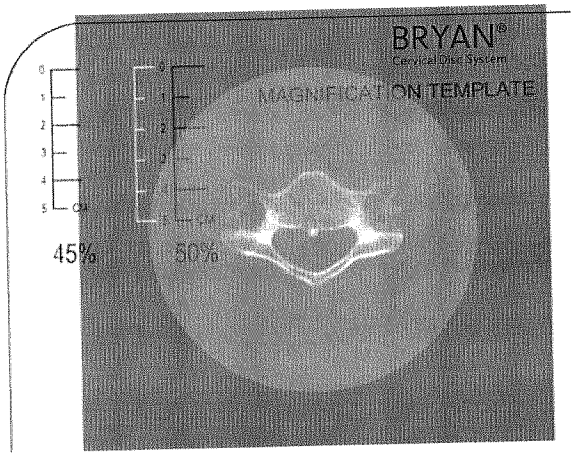

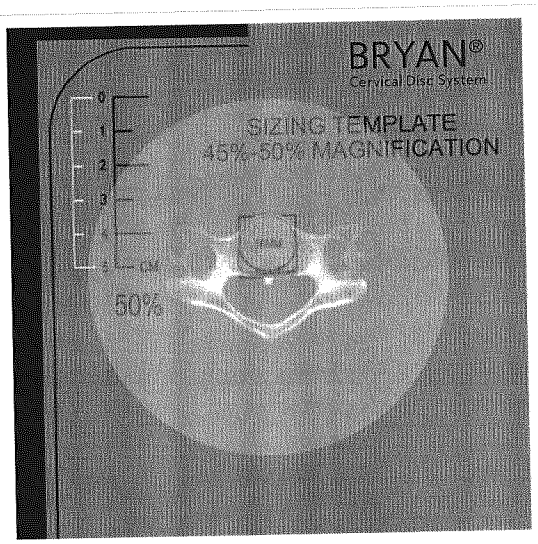

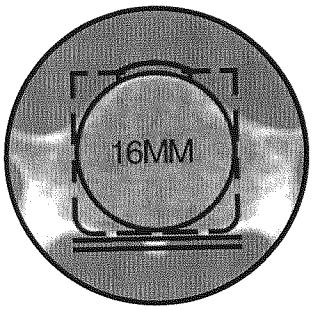

Note: Ensure no portion of the dashed lines extend into the spinal canal since burring takes place within them.

Fig. 1C

STEP 2 PATIENT AND FLUOROSCOPE UNIT POSITIONING

Extend the headpiece of the operating table so that C-arm fluoroscopy may be performed on the target disc space. Attach the **Inclinometer** to the image intensifier of the C-arm with tape so that it is visible on the cephalad edge of the display screen. The Inclinometer pendulum must be free to swing when taking lateral views. Place the patient in the supine AP position with the neck supported by a rolled towel and the head on a firm donut so that the occiput is 2.5cm (1 inch) off the table. Obtain an AP view, and position the patient so that the spinous processes adjacent to the target disc space appear midway between the facet joints. Stabilize the patient by taping or strapping the head and torso to the table (Figure 2A). This position should remain fixed throughout the procedure.

Note: It is helpful to place two vertical rods at the head end of the operating table so that the tape placed beneath the chin can be brought straight backwards and wrapped around them.

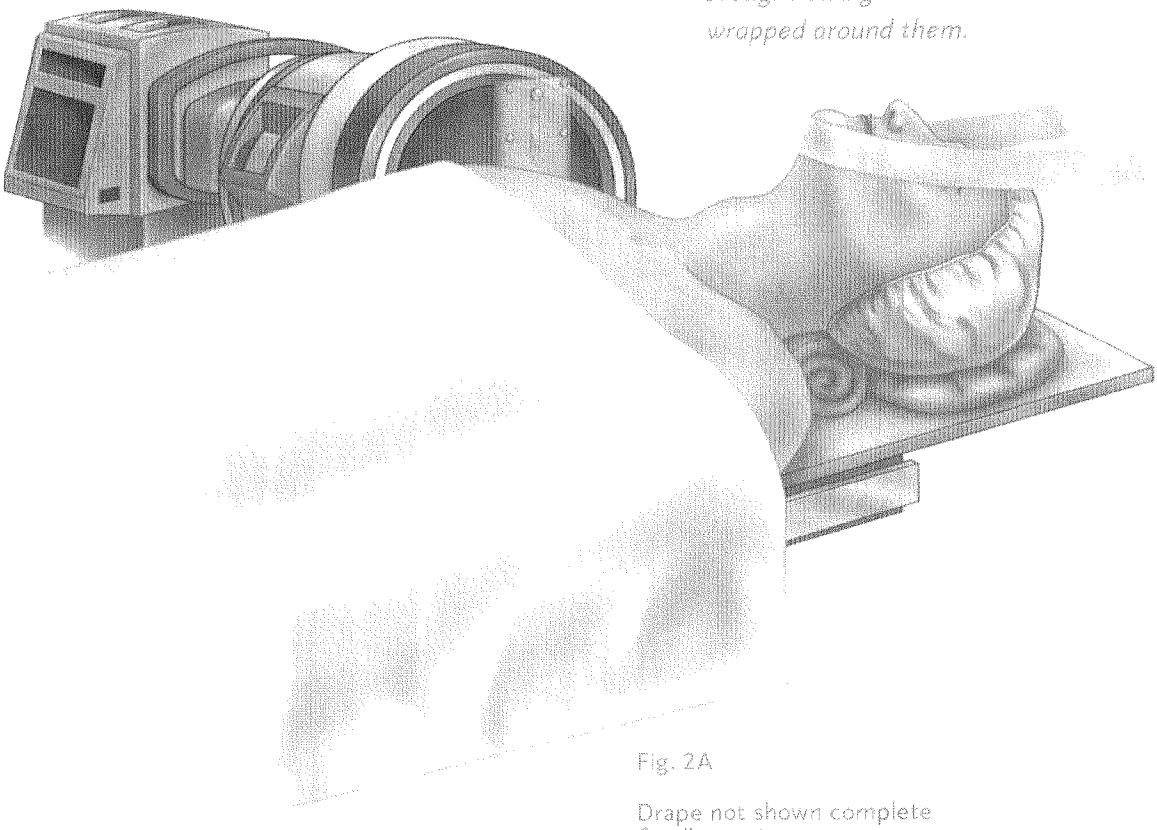

Fig. 2A

Drape not shown complete for illustrative purposes.

STEP 2 PATIENT AND FLUOROSCOPE UNIT POSITIONING (CONTINUED)

Obtain a lateral view (Figure 2B). On the fluoroscopy image display, align either edge of the long arm of the **Goniometer** with the posterior inferior corner of the caudal vertebral body and the posterior superior corner of the cephalad vertebral body of the target disc space. Align the short arm with the Inclinometer pendulum on the fluoroscopy image and record the disc space angle. Note the direction that the disc space is oriented in relation to the Inclinometer pendulum (Figure 2C).

Prepare the skin and drape the patient as if performing an anterior cervical discectomy (ACD). Mark a curvilinear incision centered at the target disc space. This may be aided with fluoro guidance. The mark should extend one centimeter across the midline. Alternatively, an oblique incision along the anterior medial border of the sternocleidomastoid muscle may be used.

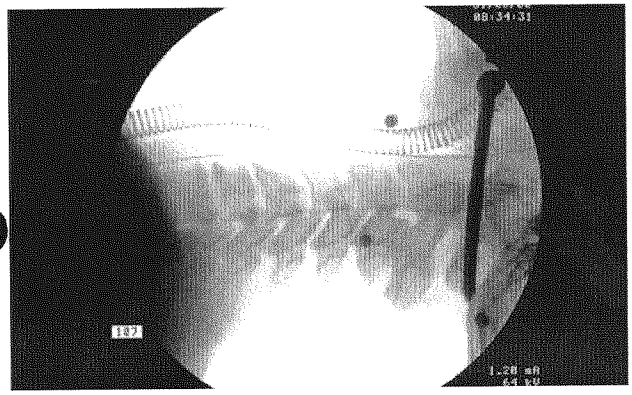

Fig. 2B

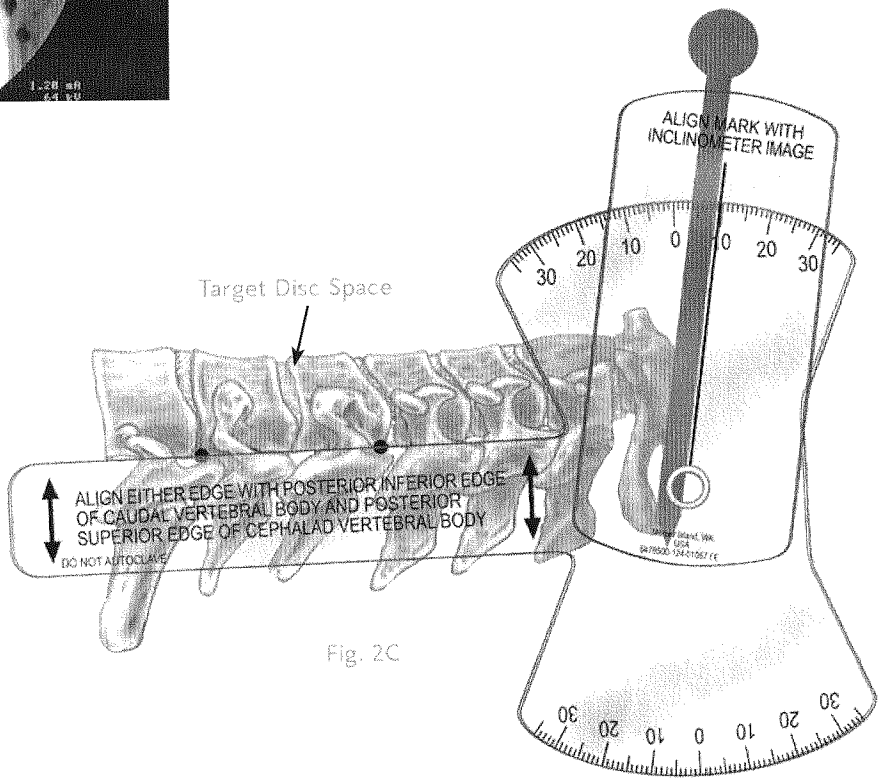

Fig. 2C

STEP 3 ATTACHMENT OF RETRACTOR FRAME

Attach the **Right** and **Left Side Rail Extensions** to the side rails of the operating table over the sterile drape, with the clamp at the level of the patient's shoulder (Figures 3A, 3B). Make the exposure at the target disc level. Confirm the target disc space fluoroscopically. Elevate the longus colli muscle widely. Slide the **Rod Clamps** over the Side Rail Extensions, taking note of the "Cephalad" marking (Figure 3C).

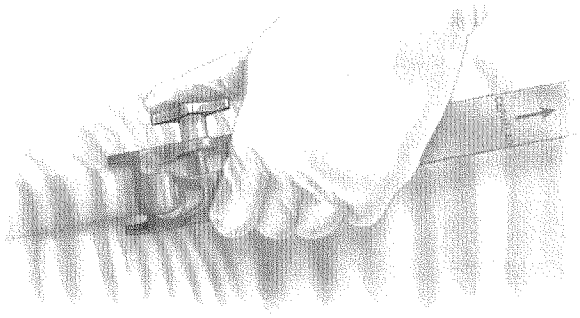

Fig. 3A

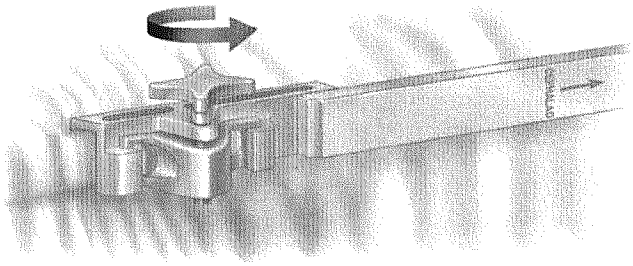

Fig. 3B

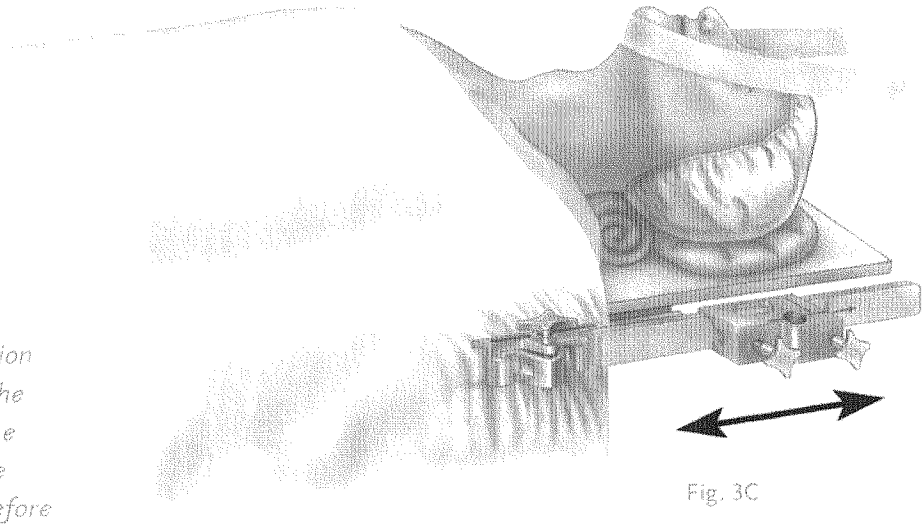

Fig. 3C

Note: Place the side rail extension on the upper portion of the side rail first. Then lift the lower movable part of the extension fully upward before tightening the clamp.

STEP 3 ATTACHMENT OF RETRACTOR FRAME (CONTINUED)

Loosen the Rod Clamps and place the **Vertical Rods** into the clamp holes. Using the **Rod Collars**, adjust the Vertical Rods so that they are approximately the same height above the table. Assemble the **Retractor Frame** as pictured in Figure 3D. The **Pilot Arm** should be placed into the vertical rod prior to the **Blunt Arm**. Position the frame so that the target disc space is approximately centered between the chin and the lower crossbar of the frame. The frame should be about one centimeter above the patient's skin level at the incision site.

Place the **Centering Level** on the frame and level the frame in the transverse plane by adjusting the Rod Collars. Tighten the Rod Clamps after the frame is level (Figure 3E).

Fig. 3D

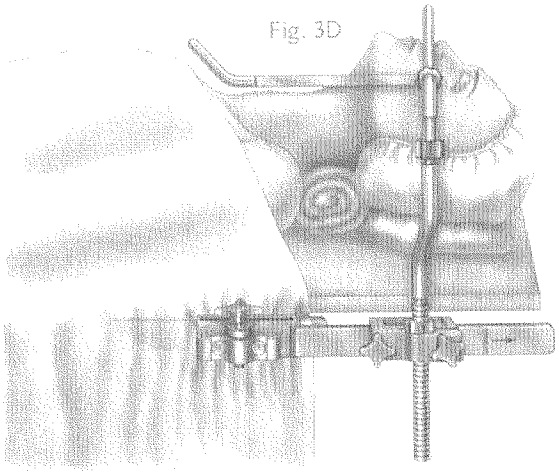

Note: Align the frame so that it is both parallel and perpendicular with the operating table.

Fig. 3E

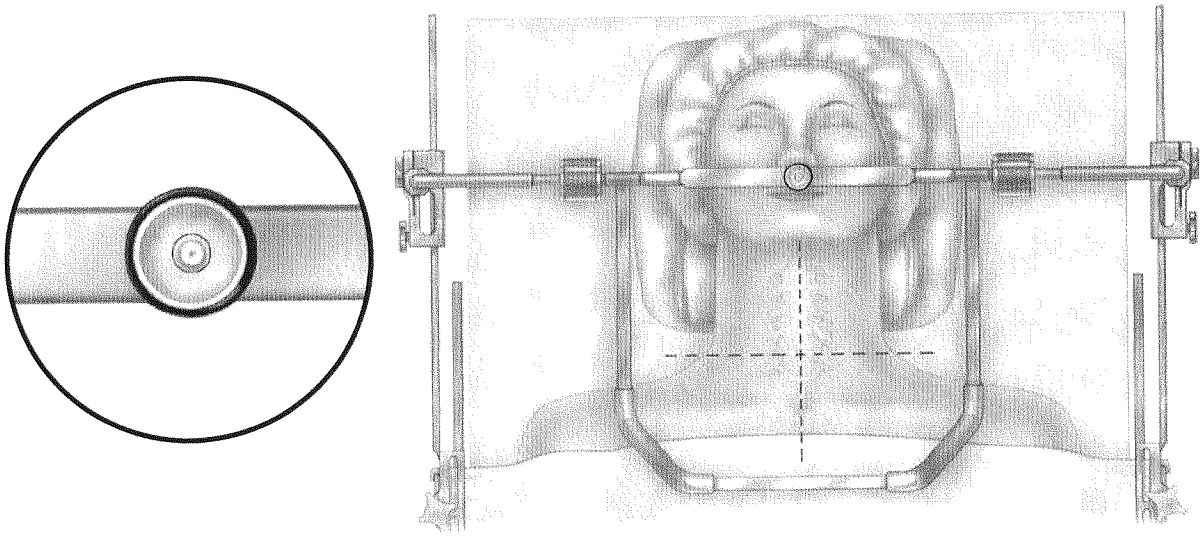

STEP 4 RETRACTOR BLADE POSITIONING

Insert a lateral **Retractor Blade Holder** into a **Kunzler Clamp**. Insert an appropriate length **Toothed Retractor Blade** beneath the longus colli muscle. Connect the retractor blade to the holder, slightly retract laterally and then attach the clamp onto the frame and secure with the **Kunzler Clamp Driver**. Repeat the previous step for the opposite side, retracting more fully, then advance the initial retractor.

Similarly, retract the cephalad and caudal incision margins using an appropriate length **Blunt Retractor Blade** and blade holder. Adjust the position of the retractor blades to create a symmetrical exposure at the target disc space (Figure 4A). Confirm adequate exposure by placing the **Dual Track Milling Guide** into the incision and onto the anterior faces of the vertebral bodies.

Note: Do not over-retract when placing the first retractor blade, as it may cause the spine to curve.

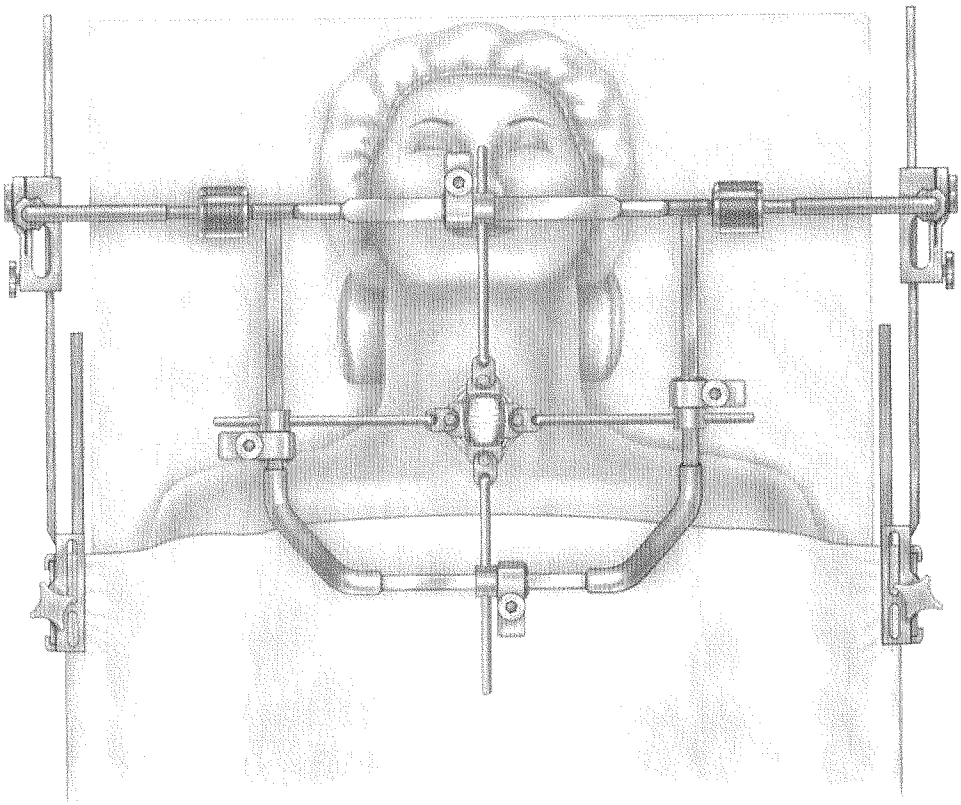

Fig. 4A

STEP 5 TARGET DISC EXCISION

Estimate the center of the target disc space and mark with sterile ink. Place the **Incision Template** onto the target disc space, aligning the center of the template with the marked center (Figure 5A). Using the template marks for the previously determined prosthesis size, mark the annulus fibrosis for the width of the incision. Excise the section of the annulus that is between the marks (Figure 5B).

Remove as much of the nucleus pulposus and soft interior portion of the annulus as possible using rongeurs and curettes. Leave the densely fibrotic portion of the annulus intact. Curette away the cartilaginous endplates of the vertebral bodies in the exposed area, leaving the bone intact.

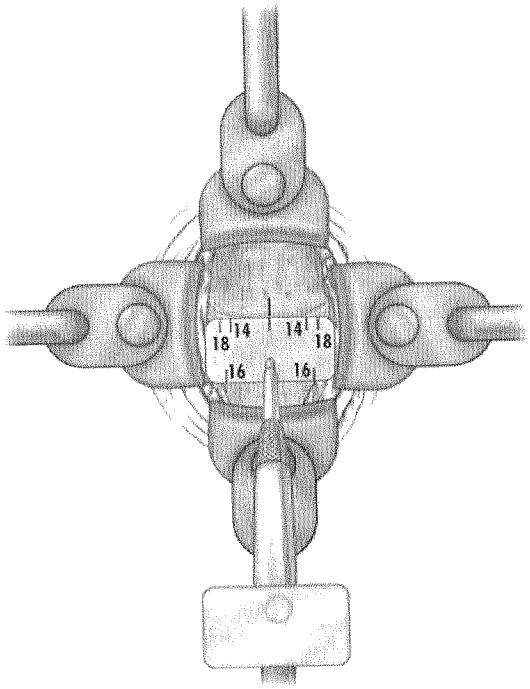

Fig. 5A

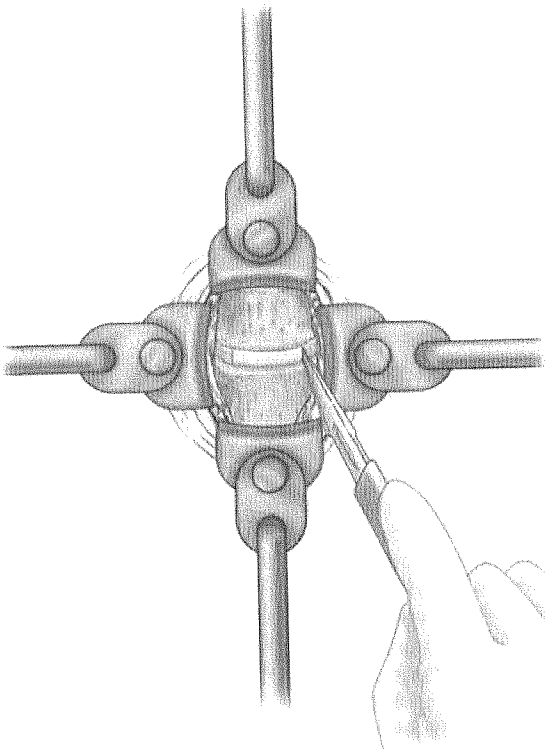

Fig. 5B

STEP 6 EXCESS BONE AND TISSUE REMOVAL

With the handpiece in the "UNLOCK" position (dots not aligned), insert the 4.8mm **Fluted Ball Burr** fully into the **Drilling Handpiece** until resistance is felt. Turn the rotating portion of the handpiece approximately one-quarter turn, until it is locked (black arrow aligned with "LOCK" or dots aligned).

Connect the handpiece to the **MIDAS REX® System** or **Surgical Drive System**. Lightly burr the anterior surfaces of the vertebral bodies to remove any soft tissue and bony protrusions to create a flat surface, taking care to prevent excessive anterior bone removal (Figure 6A). Use the burr to remove any osteophytes that extend anteriorly from the endplates. Disconnect the handpiece from the drive system motor.

Insert a Kerrison rongeur sideways into the disc space, then rotate it upward (Figure 6B). Use the Kerrison to remove the anterior lip of bone on the cephalad vertebral body over the width of the incision in the annulus while keeping the fixed shaft of the rongeur parallel to the caudal endplate.

Note: Do not enter the disc space with the burr to remove the anterior osteophytes.

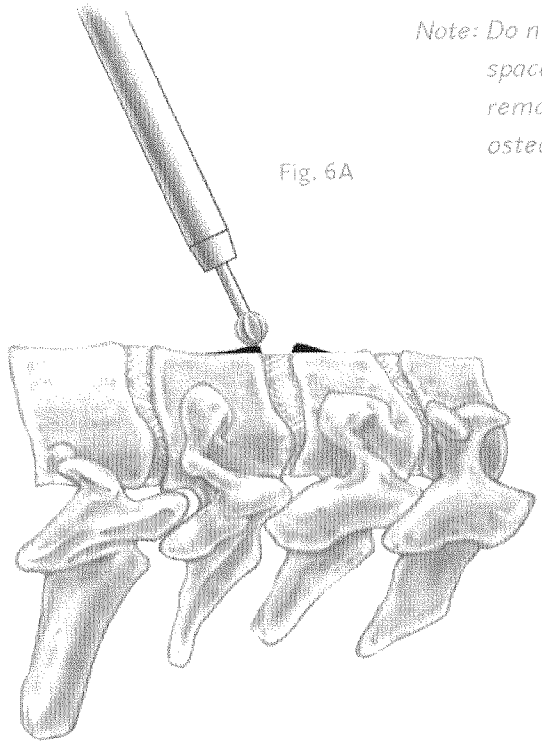

Fig. 6A

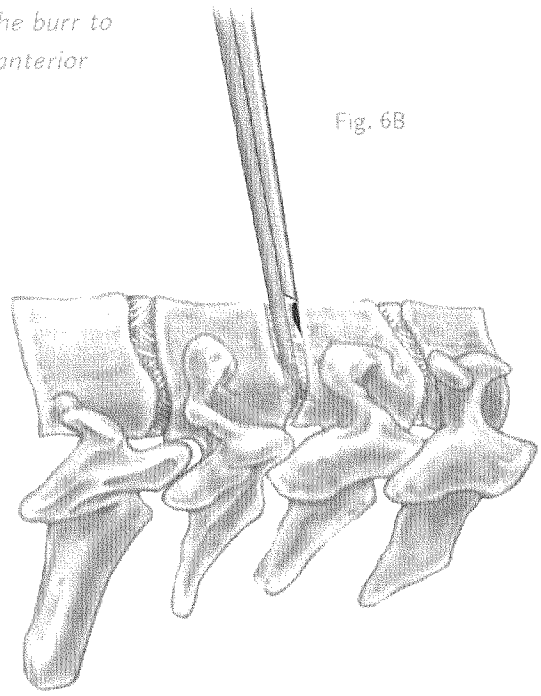

Fig. 6B

The MIDAS REX® Classic and MIDAS REX® III Systems require adapters so the handpieces will operate properly (Page 30). Refer to the Surgical Tips section (Page 31) if the burr does not lock into the Drilling Handpiece.

STEP 7 DISTRACTION OF VERTEBRAL BODIES

Using **Cam Distractor(s)** of increasing widths, slowly distract the disc space using an alternating clockwise/counter-clockwise rotary motion, taking care not to damage the cortical endplates (Figures 7A, 7B). After achieving 8.5mm distraction, leave the distractor in place for 60 seconds to adequately stretch the ligaments.

Should one choose to decompress posterior structures at this time, **Sagittal Retainers** of increasing size may be placed at the sides of the distracted disc space to maintain distraction. Complete the decompression by moving the retainer from side to side as necessary. Distraction of the vertebral bodies may be facilitated by opening the posterior annulus fibrosis and posterior longitudinal ligament. It is important to remove the lateral soft disc, exposing the uncinate processes.

Note: Fully insert the distractor to achieve more parallel distraction.

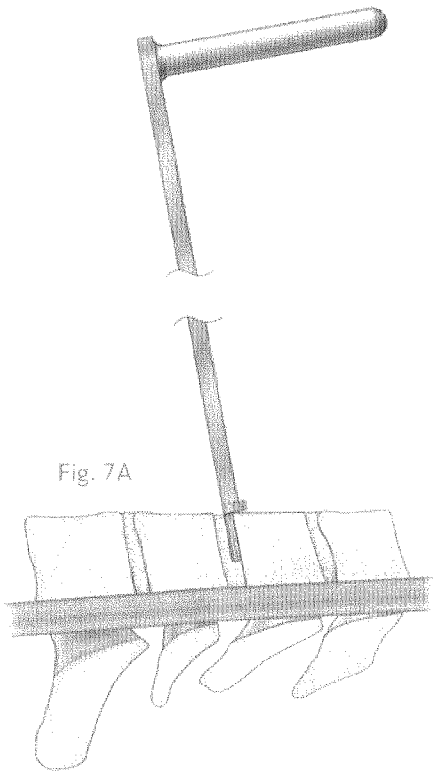

Fig. 7A

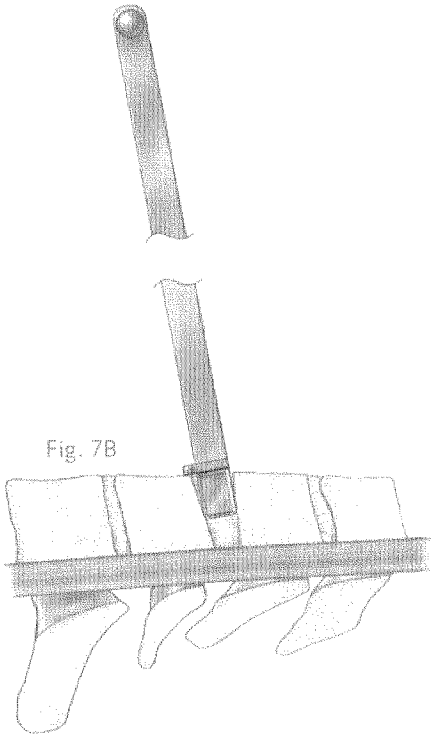

Fig. 7B

The opening is oversized if the square end of the Adjustable Drill Guide Driver fits loosely in the disc space. An opening of the target disc space greater than 8.5mm may lead to improper fit of the prosthesis and is an indication for terminating the procedure and fusing the patient.

STEP 8 TRANSVERSE CENTERING

Insert the **Transverse Centering Tool** into the disc space with the sliding marker retracted and facing cephalad. Expand the tips of the tool by squeezing the handles until the tips contact the lateral soft tissue margins just anterior to the uncinate processes. Turn the knob clockwise to lock.

Place the Centering Level on the tool, and adjust the Transverse Centering Tool until the bubble is centered in the lateral direction (Figure 8A). It is not necessary to level the tool in the cephalad/caudal direction. Using the sliding pointer of the tool as a guide, mark the center point of the cephalad vertebral body (Figure 8B). Unlock and remove the tool from the disc space.

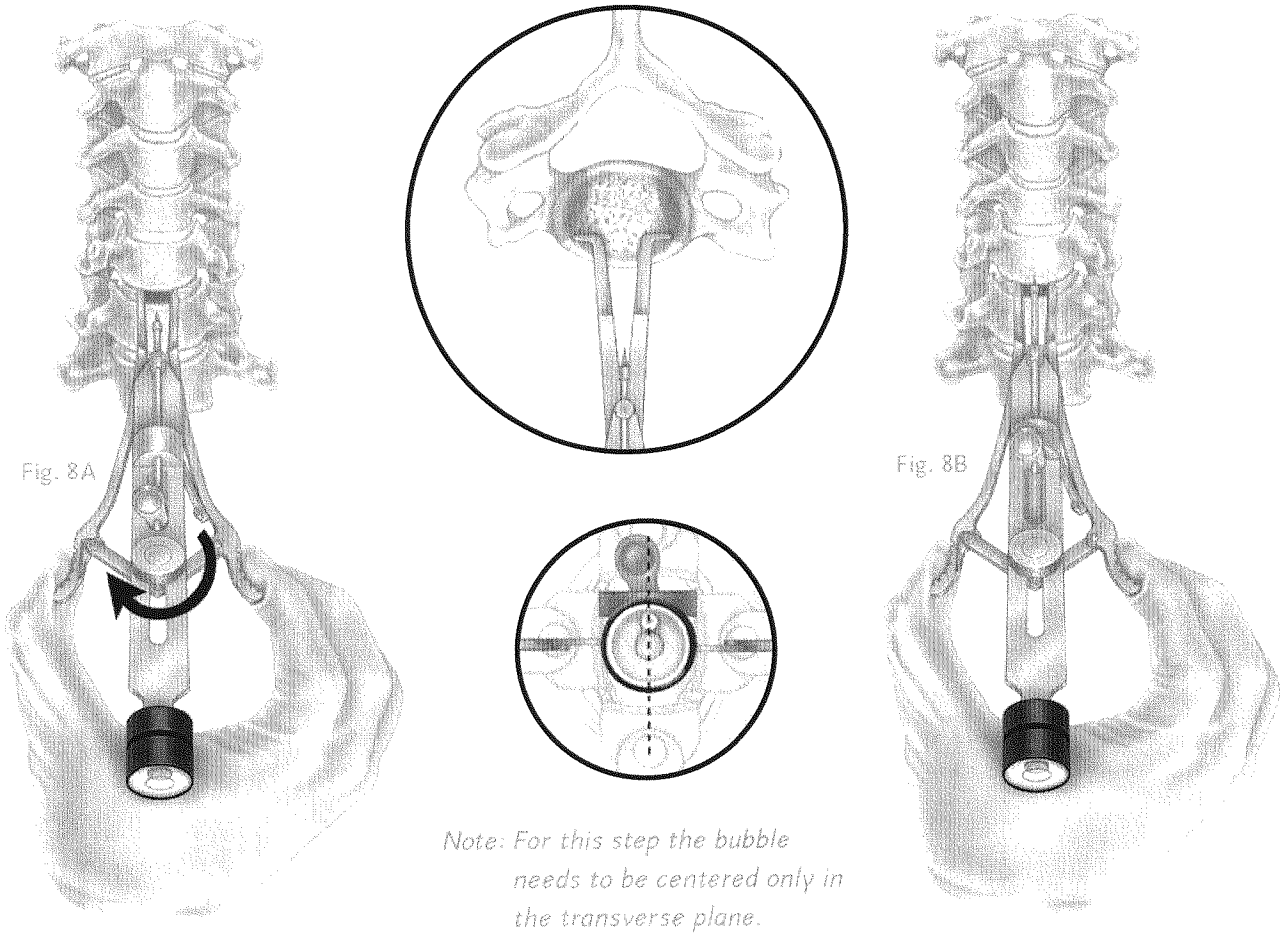

Note: For this step the bubble needs to be centered only in the transverse plane.

If the uncinate processes are not symmetrical (as seen on MRI or CT), locate the instrument by placing the first tip on the more anterior process and then expand the tool until it engages the contralateral side.

STEP 9 SAGITTAL CENTERING

Orient the **Sagittal Wedge** in the target disc space, so that the "CEPH" marking on the handle faces cephalad. Place the center of the curved surface of the wedge in line with the mark made on the vertebral body with the Transverse Centering Tool.

Press the wedge into the disc space until the stop contacts the anterior surface of the caudal vertebral body, while maintaining a midline position (Figures 9A, 9B). Tap lightly with a small surgical mallet, if necessary. The stop must contact the anterior vertebral body and be confirmed visually or radiographically.

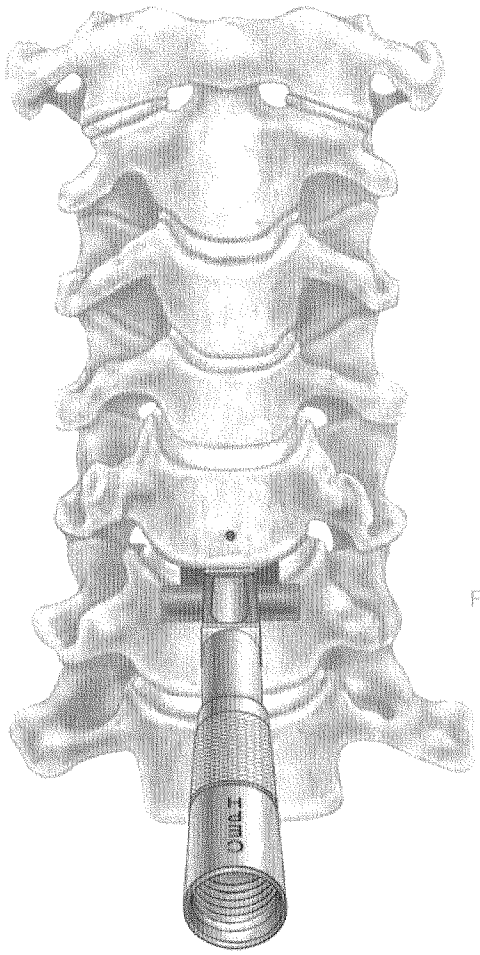

Fig. 9A

Note: If the wedge cannot be fully inserted with gentle tapping, it may be necessary to remove the medial aspect of the hypertrophic uncinate process with a 4.8mm burr.

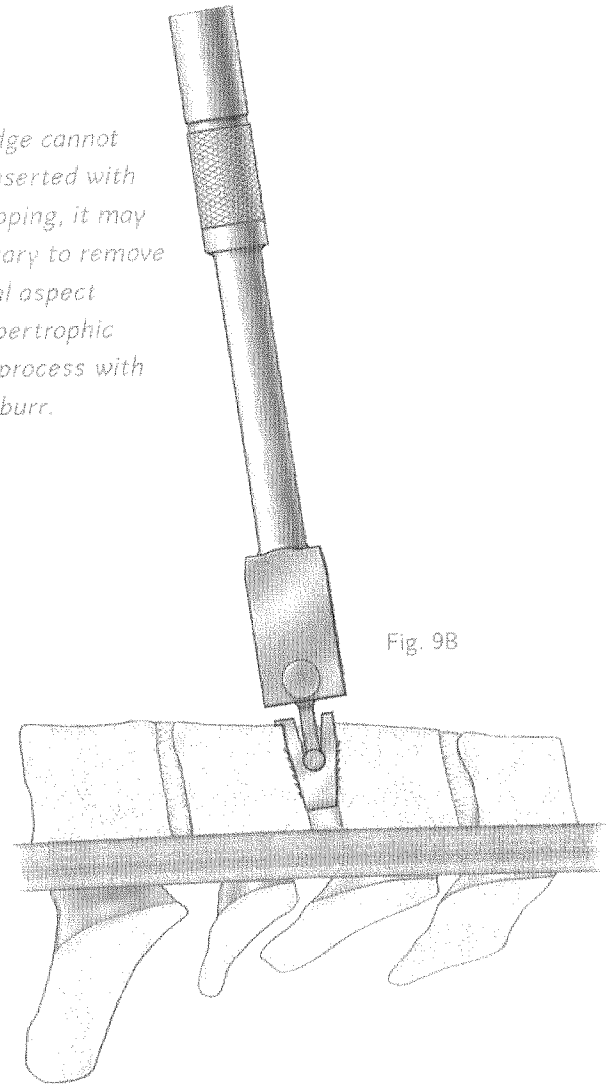

Fig. 9B

STEP 10 DUAL TRACK MILLING GUIDE PLACEMENT

Retract the adjustable drill guide attached to the Dual Track Milling Guide so that the drill guide, when viewed from the side, is approximately 3mm above the fixed drill guide. Place the Dual Track Milling Guide over the Sagittal Wedge taking note of the "CEPHALAD" marking (Figure 10A).

Slide the Dual Track Milling Guide onto the Sagittal Wedge until the fixed drill guide fully contacts the anterior portion of the caudal vertebral body. Fully insert the **Alignment Block** over the end of the Sagittal Wedge and into the guide keyway until it seats.

Slide both rods of the **Milling Guide Brace** into two Kunzler Clamps, attach the clamps to the cephalad side of the retractor frame, position the brace over the Dual Track Milling Guide. Loosen the locking nuts and screw the adjustable pins into the corresponding holes in the cephalad side of the Dual Track Milling Guide. In the event that attachment is not possible, move the Milling Guide Brace position on the Retractor Frame accordingly (Figure 10B).

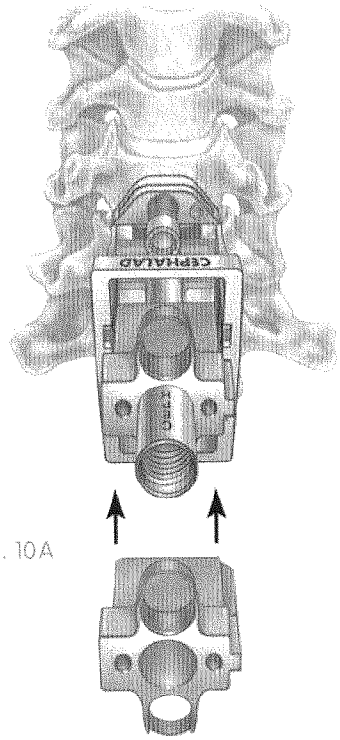

Fig. 10A

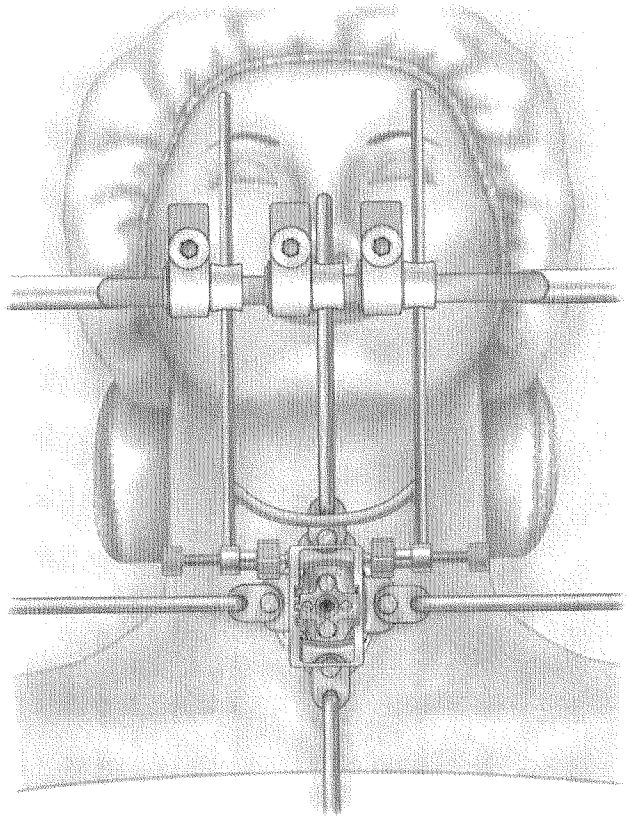

Fig. 10B

STEP 10 DUAL TRACK MILLING GUIDE PLACEMENT (CONTINUED)

Set the adjustable arm of the **Protractor** to the angle and direction obtained earlier with the Goniometer (Step 2, Figure 2C). Lock the arm, and place the Protractor over the Sagittal Wedge and insert the three legs into the corresponding holes in the Alignment Block (Figure 10C). The Protractor may be inserted into the alignment block two ways; make sure it is facing the direction that produces the correct angle of the Dual Track Milling Guide relative to the disc space. Place the Centering Level on the Protractor and adjust the Dual Track Milling Guide until it is level. Secure the brace with Kunzler Clamps and tighten the lock nuts.

Remove the Protractor and confirm the correct position of the Dual Track Milling Guide on the vertebral bodies using the **Cephalad and Caudal Contact Pins**. Insert the Caudal Contact Pin (red) through the caudal hole in the alignment block and into the drill guide. Insert the Cephalad Contact Pin (blue) through the cephalad hole in the Alignment Block (Figure 10D). Verify the index groove on the Caudal Contact Pin is in line with the top surface in the Alignment Block. Verify the top surface of the block falls between the lines of the Cephalad (blue) Contact Pin. Remove the Contact Pins from the alignment block.

Note: The bubble must be centered in the circle.

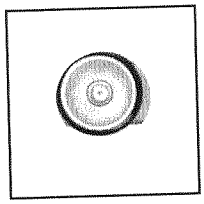

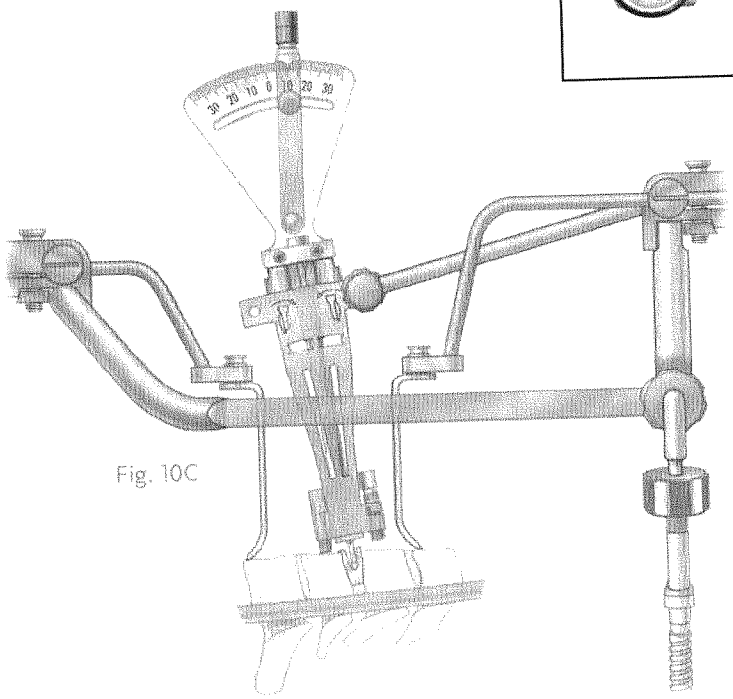

Fig. 10C

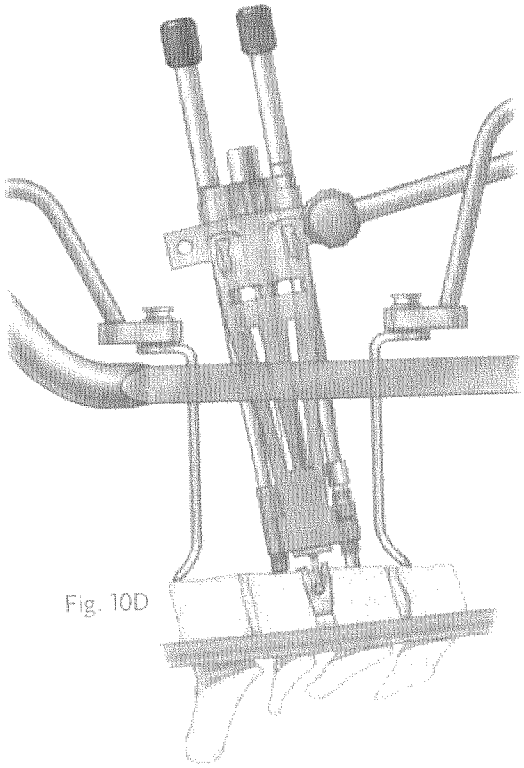

Fig. 10D

Refer to the Surgical Tips section (Page 31) if the correct position is not confirmed using the contact pins.

STEP 11 CAUDAL ANCHOR POST PLACEMENT

With the Drilling Handpiece handle in the "UNLOCK" position (dots not aligned), insert the **Drill Bit** fully into the handpiece until resistance is felt. Turn the rotating portion of the handpiece approximately one-quarter turn, until it is locked (dots aligned). Attach the handpiece to the drive system.

Using a syringe filled with sterile saline, fill the drill guide hole prior to insertion of the Drill Bit. Drill the caudal hole by inserting the shaft of the Drilling Handpiece through the hole of the Alignment Block (Figure 11A) and placing the drill into the drill guide. Drill until the stop is reached. Irrigate throughout using sterile saline.

Insert a **3.5mm Anchor Post** into the **Anchor Post Driver** by orienting the hex and pressing the post into the driver. Install the Anchor Post into the bone by inserting it through the caudal hole in the Alignment Block and turning the Anchor Post until the driver reaches the top of the drill guide (Figure 11B). Remove the driver.

Install the **Anchor Post Nut** onto the post and tighten, ensuring the flexible shaft of the nut is outside of the Dual Track Milling Guide (Figure 11C).

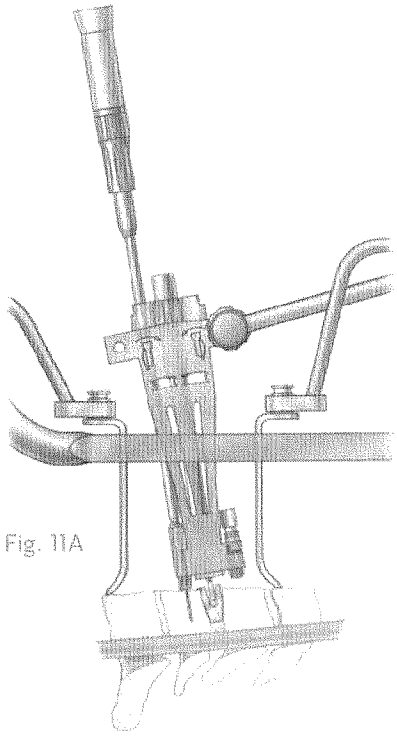

Fig. 11A

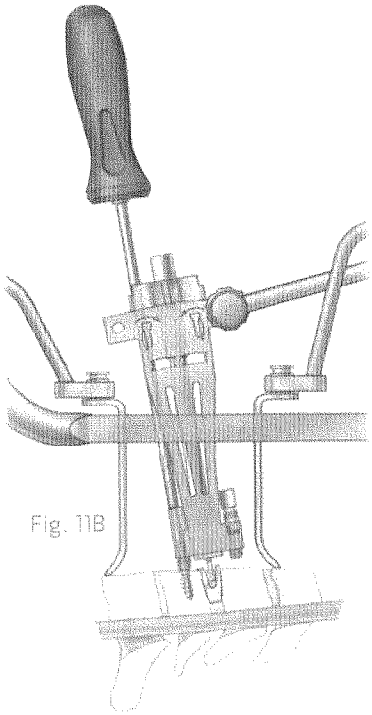

Fig. 11B

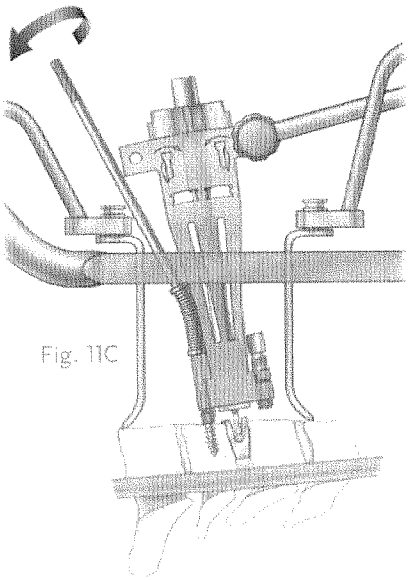

Fig. 11C

Refer to the Surgical Tips section (Page 31) if it is not possible to install the anchor posts properly.

STEP 12 CEPHALAD ANCHOR POST PLACEMENT

Using the Adjustable Drill Guide Driver placed through the cephalad hole in the Alignment Block, gently turn the adjustable drill guide portion of the Dual Track Milling Guide clockwise until the drill guide makes contact with the cephalad vertebral body (Figure 12A). Lock the adjustable guide by tightening the locking screw with the **Adjustable Drill Guide Locking Wrench** (Figure 12B).

Use the Cephalad Contact Pin (blue) to reconfirm proper positioning of the guide relative to the vertebral body. The top surface of the block should lay between the grooves on the Cephalad Contact Pin (Figure 12C).

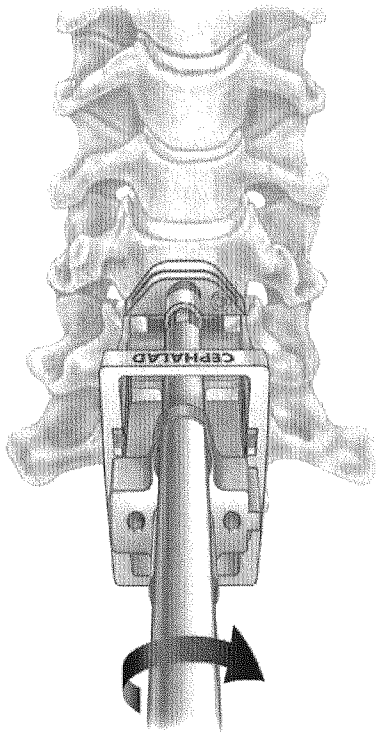

Fig. 12A

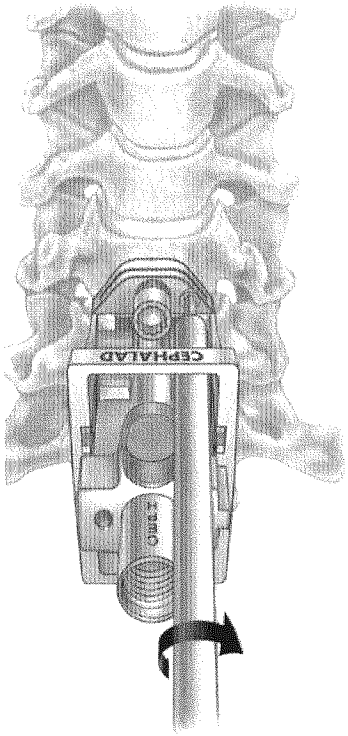

Fig. 12B

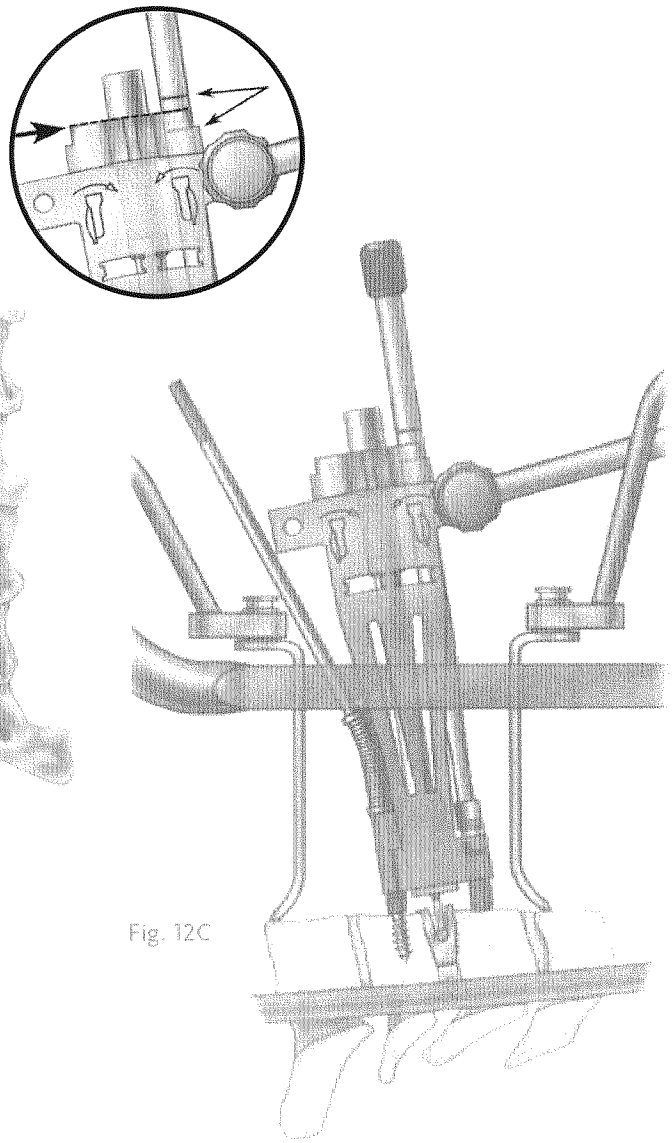

Fig. 12C

STEP 12 CEPHALAD ANCHOR POST PLACEMENT (CONTINUED)

As before, insert the shaft of the Drilling Handpiece through the cephalad hole in the Alignment Block and drill the cephalad hole. Insert the Cephalad Anchor Post and lock with an Anchor Post Nut. Remove the handpiece from the drive system motor.

Remove the Alignment Block from the top of the Sagittal Wedge/Milling Guide assembly. Remove the Sagittal Wedge. This may be facilitated by screwing the **Sagittal Wedge Removal Tool** into the hole in the top of the Sagittal Wedge and turning the handle against the guide, removing it from the disc space (Figure 12D).

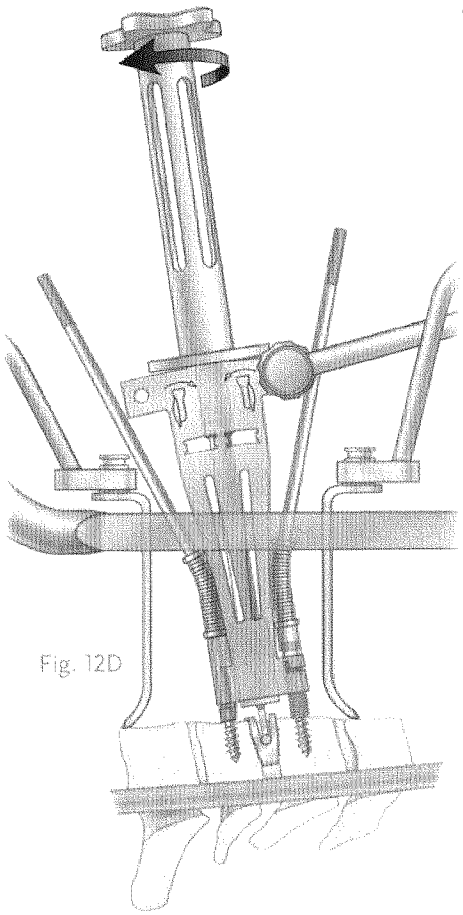

Fig. 12D

Note: After the base plate of the sagittal wedge removal tool makes contact with the milling guide, another six one-half turns will release the sagittal wedge from the disc space.

The Dual Track Milling Guide must remain flush against the anterior surface of each vertebral body for correct alignment of the prosthesis.

Refer to the Surgical Tips section (Page 31) if alignment is not correct or if it is not possible to install the Anchor Posts properly.

STEP 13 MILLING DEPTH DETERMINATION

Orient the **Milling Depth Gauge** foot in the direction of the cephalad vertebral body. Insert the depth gauge into the Dual Track Milling Guide cephalad slot until the round pins of the gauge reach the bottom of the guide slots (Figure 13A). Adjust the movable portion of the gauge so that the foot contacts the anterior surface of the cephalad vertebral body. Lock the gauge with the lock screw. Visually or fluoroscopically confirm the position of the foot against the cephalad vertebral body. Remove the gauge and check the opposite side to determine which is more anterior. Once this is determined, set the gauge aside for later use during milling.

Note: This is a very important measurement and should be confirmed radiographically. After measuring the cephalad depth, lock the gauge and insert it in the caudal slot, determine the most anterior vertebral body.

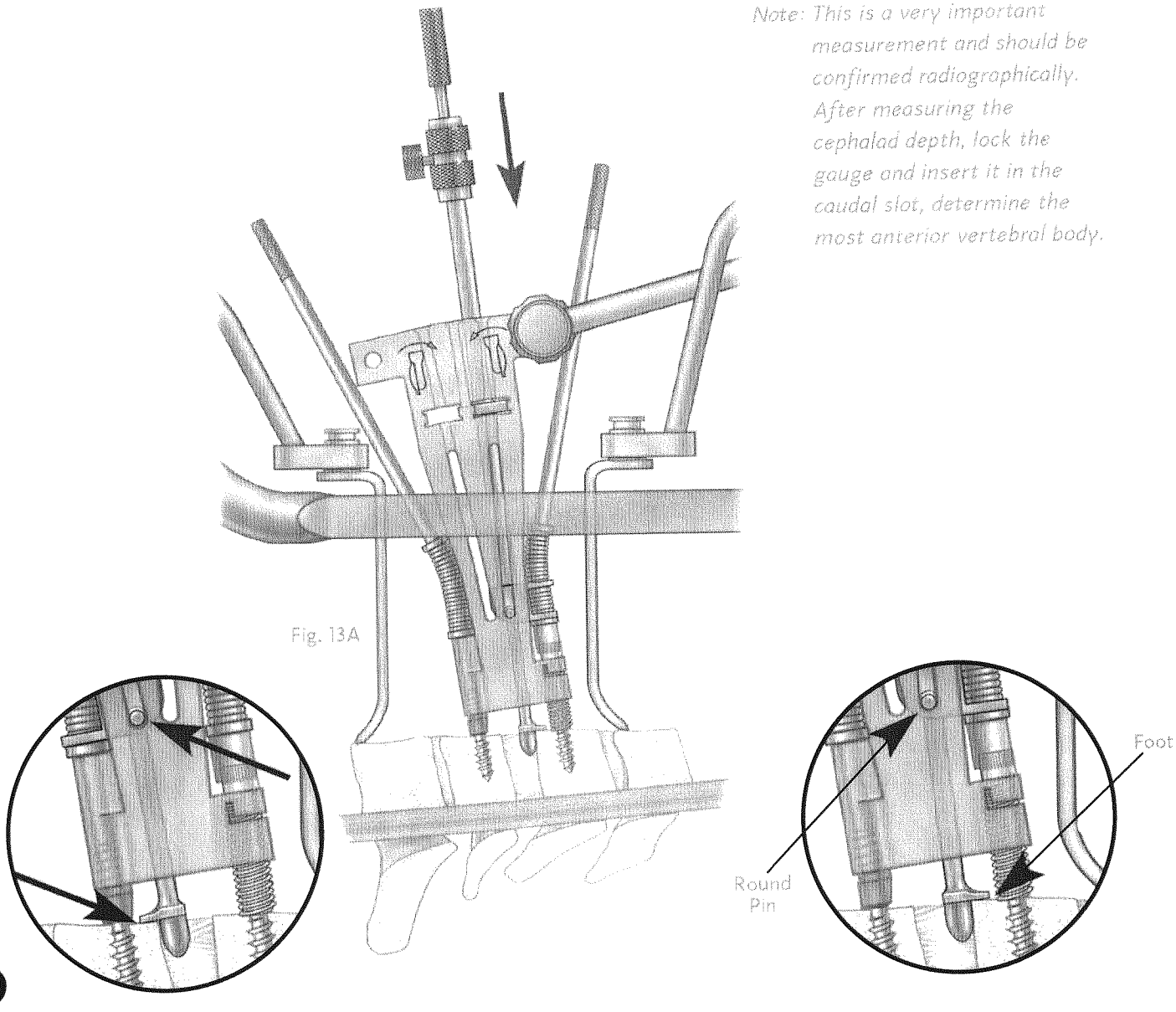

Fig. 13A

STEP 14 BURRING DEPTH VERIFICATION

Select the **Burring Ring** that corresponds to the previously selected prosthesis size and screw it flush to the flange of the appropriate **Burring Block** (Figure 14A). Place the Block/Ring assembly into the Cephalad Dual Track Milling Guide slot (Figure 14B).

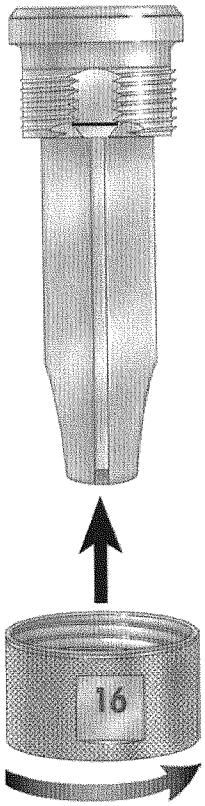

Fig. 14A

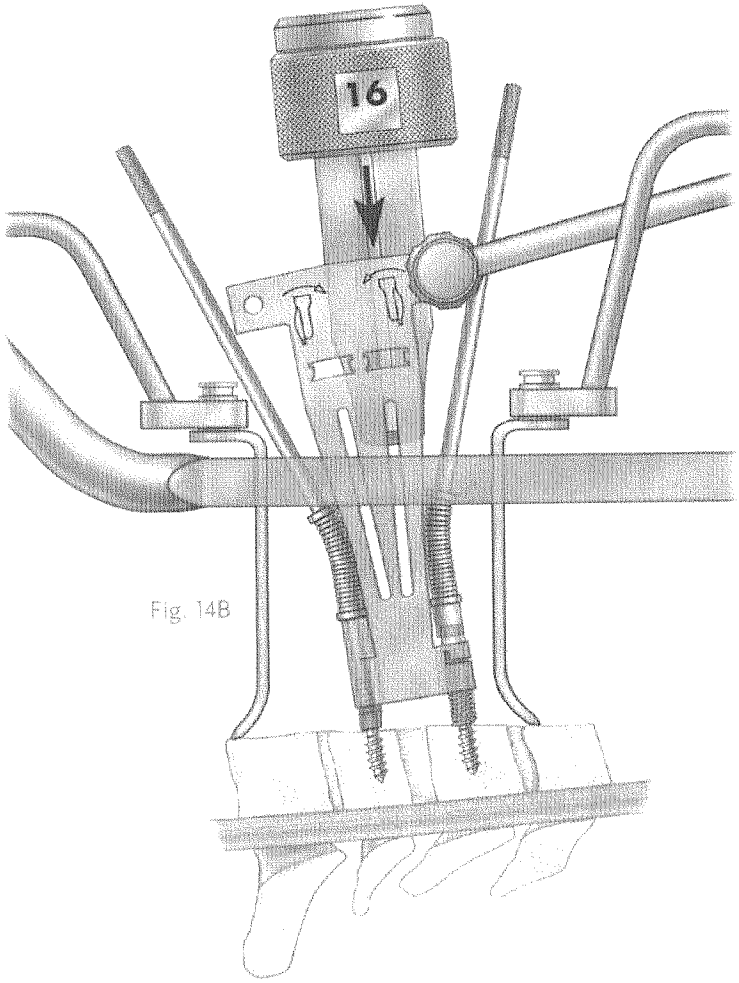

Fig. 14B

STEP 14 BURRING DEPTH VERIFICATION (CONTINUED)

Ensure the ring is seated against the Dual Track Milling Guide. Retract the movable probe of the **Burring Depth Gauge** and lock with the set screw. Insert the gauge into the Burring Block until the round pins of the gauge reach the bottom of the Burring Block guide slots. Unlock the gauge set screw and lower the gauge probe to the approximate level of the posterior longitudinal ligament (PLL) (Figure 14C). Lock the set screw and check the position of the gauge tip with a lateral fluoroscopic image. Readjust as necessary. Remove the gauge.

With the handpiece in the "UNLOCK" position, insert the 4.0mm **Fluted Drum Burr** fully into the **Centered Burring Handpiece** until resistance is felt. Rotate the burr to confirm that it is fully seated. Turn the rotating portion of the handpiece approximately one-quarter turn to lock the burr.

Using the arrows as guides, join the depth gauge pins to the Burring Handpiece holes and confirm that the distal end of the burr is equal to or no more than 1mm shorter than the depth gauge (Figure 14D).

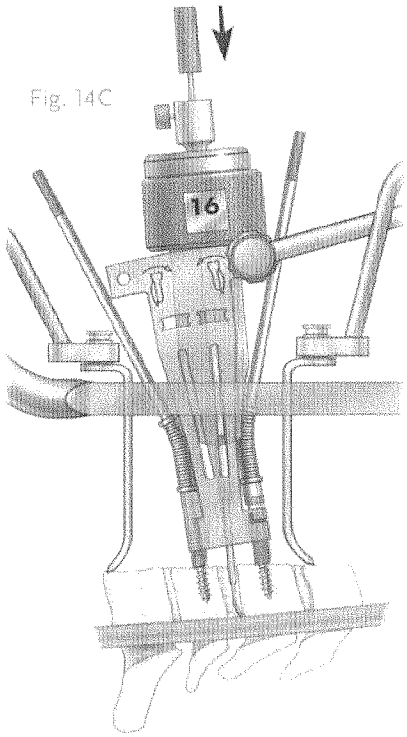

Fig. 14C

Note: Insert the probe to an imaginary line drawn between the posterior cortical bone of both vertebral bodies exclusive of osteophytes. Check the cross-section of the CT to make sure no unusual depression in the mid portion of the posterior aspects of the vertebral bodies are present.

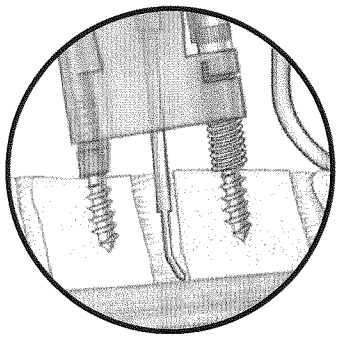

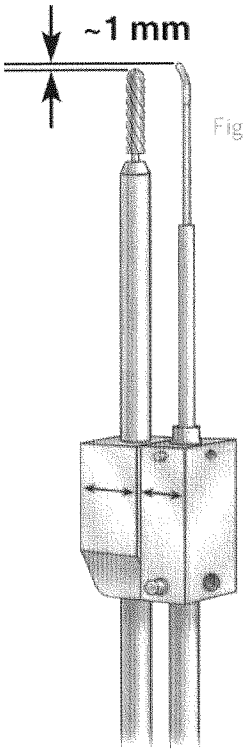

Fig. 14D

If the burr length is greater than the depth gauge, damage may result to the posterior soft tissues and the prosthesis size should be reduced. If the burr is more than 1mm shorter than the depth gauge a larger prosthesis size may be needed.

If the Milling Guide Brace interferes with the Burring Ring, attach the brace to the caudal side of the Retractor Frame and utilize the caudal holes in the Dual Track Milling Guide.

STEP 15 BURRING

Attach the Centered Burring Handpiece to the Drive System. Unscrew the Burring Ring from the flange of the Burring Block until the line on the block matches the top of the Burring Ring starting position. Insert the Centered Burring Handpiece into the Burring Block. Using sterile saline irrigation, actuate the Drive System and pivot the handpiece from side to side through its full range of motion (Figure 15A). While pivoting the handpiece, rotate the adjustment ring counter-clockwise until the adjustment ring stops against the top of the block (Figure 15B). Remove the burr from the handpiece.

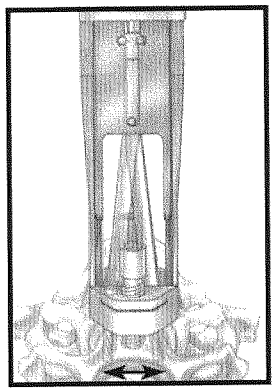

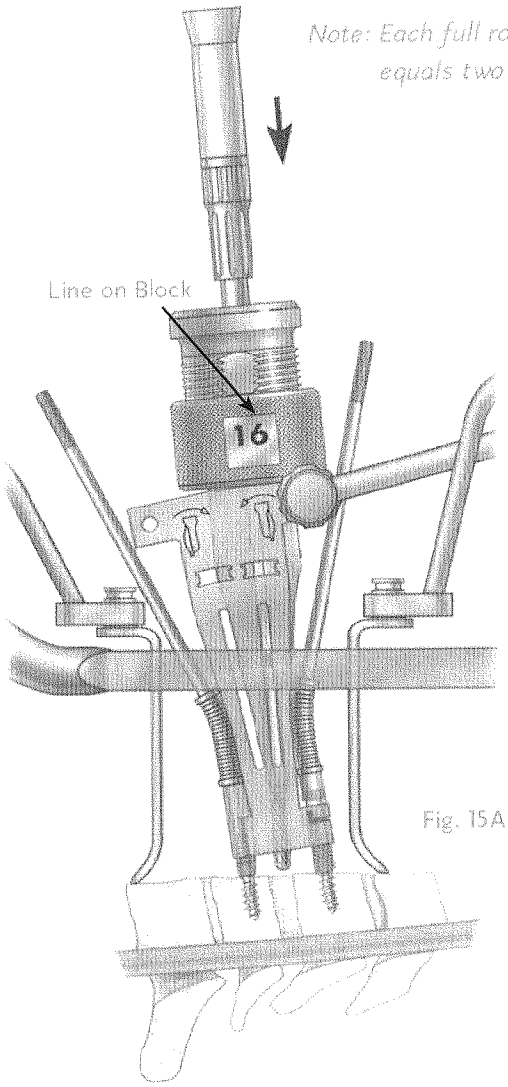

Fig. 15A

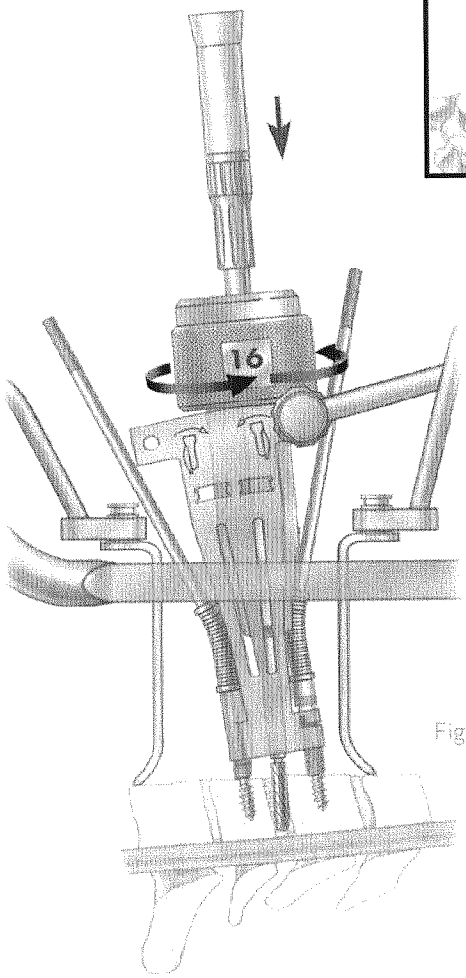

Fig. 15B

Attach the 4.0mm Fluted Drum Burr into the **Offset Burring Handpiece**. Reset the Burring Ring to the starting position. Place the Offset Burring Handpiece into the block, oriented to burr the cephalad vertebral body. Repeat the burring process as previously described for the Centered Burring Handpiece remembering to use sterile saline irrigation (Figure 15C).

After burring of the cephalad vertebral body is complete, remove the Offset Burring Handpiece from the block. Reset the Burring Ring to the starting position and then move the block to the caudal slot in the Dual Track Milling Guide. Rotate the handpiece 180 degrees from the original direction and reinsert it into the block. Burr the caudal endplate using the same method as before, remembering to use sterile saline irrigation (Figure 15D). Confirm the 8.5mm disc space by inserting the square end of the Adjustable Drill Guide Driver into the burred space.

Fig. 15C

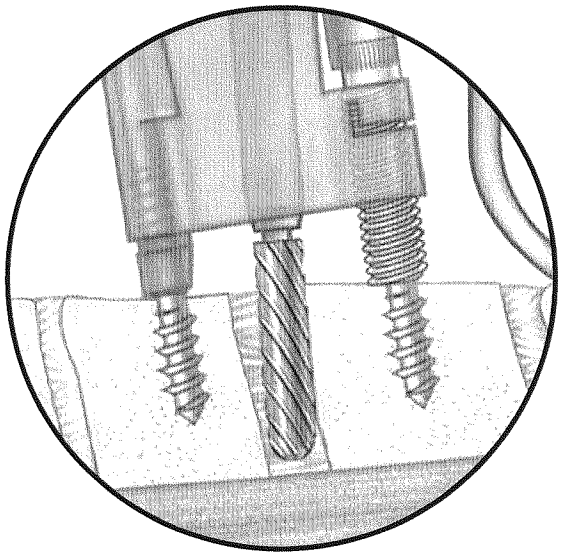

Fig. 15D

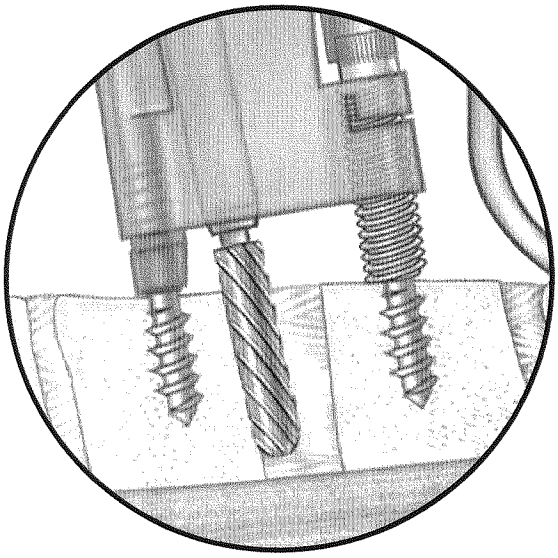

STEP 16 MILLING

Remove the **Milling Disc** from the selected prosthesis package, and thread it clockwise onto the etched side of the Milling **Handpiece** (Figure 16A). Tighten the Milling Disc using the **Milling Disc Wrench** and **Milling Disc Driver** (Figure 16B).

Connect the distal saddle of the Milling Depth Gauge to the corresponding block of the Milling Handpiece. Care should be taken to not alter the setting of the Milling Depth Gauge. Adjust the Milling Handpiece length by turning the adjustment wheel on the Milling Handpiece handle so that the outside diameter of the Milling Disc just contacts the depth gauge foot (Figure 16C).

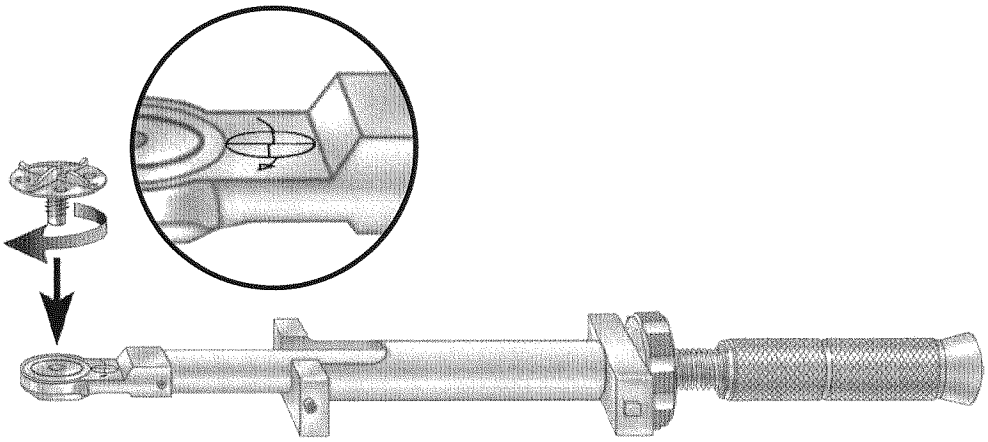

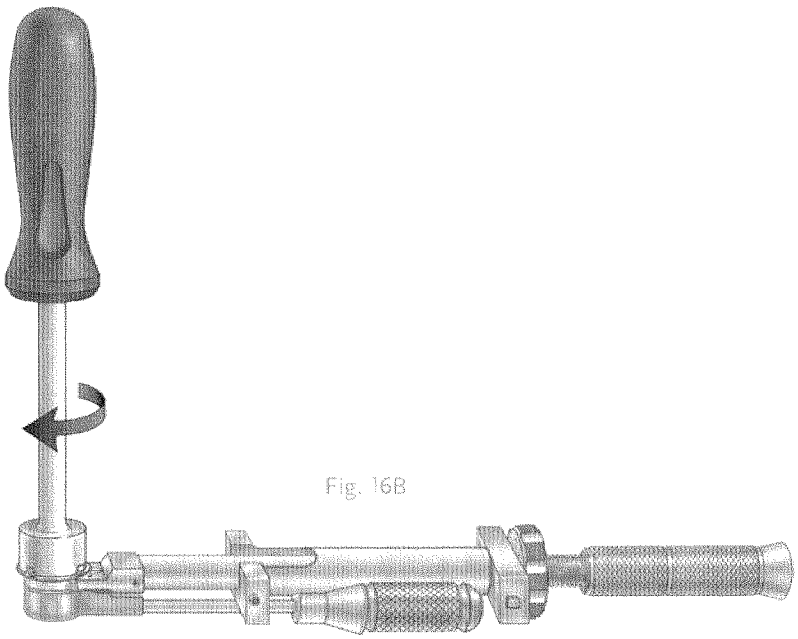

Fig. 16B

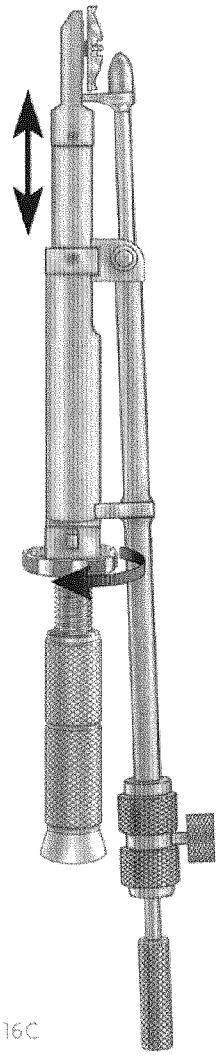

Fig. 16C

STEP 16 MILLING (CONTINUED)

Attach the handpiece to the Drive System. With the cutter surface facing caudal, insert the handpiece into the caudal guide slots until both round pins reach the bottom of the slots. Using continuous sterile saline irrigation, activate the drive system and gently pivot the handpiece back and forth in a pecking motion until the stop on the guide is reached (Figure 16D).

Turn off the motor and remove the Milling Handpiece from the caudal guide slot. Clean the Milling Disc with sterile saline. Rotate the handpiece 180 degrees from the original milling direction so the cutting surface is facing the cephalad vertebral body and reinsert the handpiece into the cephalad guide slot. Continue using sterile saline irrigation and gently pivot the handpiece back and forth, as before, until the stop is reached.

Verify the presence of milled cavities on the endplate surfaces of both vertebral bodies. Also verify that the milling process removed sufficient anterior bone to provide a space for the prosthesis flange.

Disconnect the handpiece from the drive system. Remove the Milling Disc from the handpiece using the Milling Disc Wrench and Driver and discard the Milling Disc. Do not reuse.

Note: Often the milling handpiece will not drop completely into the disc space. In this case, while applying only slight downward pressure on the handpiece, activate the drive allowing the handpiece to reach the full depth of the slot. The square pin will appear in the curved slot. Begin the pivot pecking motion, stopping only when under direct vision, the square pin contacts the stop in the curved slot. A lateral fluoro image may be taken here.

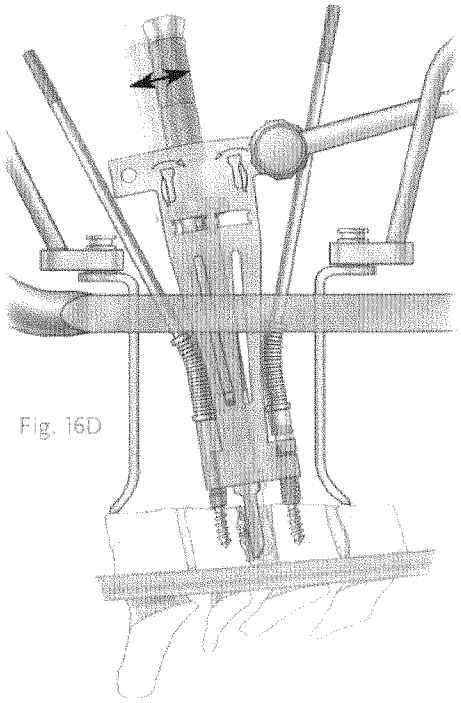

Fig. 16D

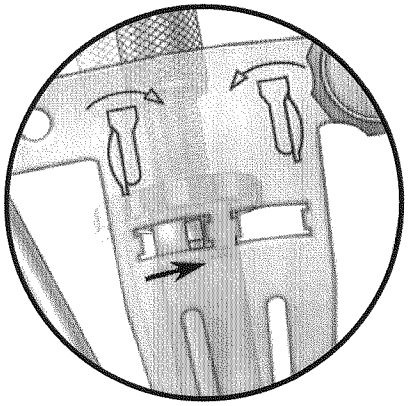

Refer to the Surgical Tips section (Page 32) if the Milling Handpiece does not reach the bottom of the guide slots or it does not function.

STEP 17 DISTRACTOR PLACEMENT

Insert the appropriate **Implant Spacer** into the disc space and expand it to fully engage both milled surfaces but do not distract the vertebral bodies (Figure 17A). Remove the Milling Guide Brace. Remove the Anchor Post Nuts and the Dual Track Milling Guide, over the Implant Spacer, rocking gently as necessary, leaving the Anchor Posts in place (Figure 17B).

Adjust the **Anchor Post Distractor** so the distractor tubes can be placed over the Anchor Posts. Turn the thumbscrew to maintain the distraction distance of the Implant Spacer. Collapse and remove the Implant Spacer (Figure 17C).

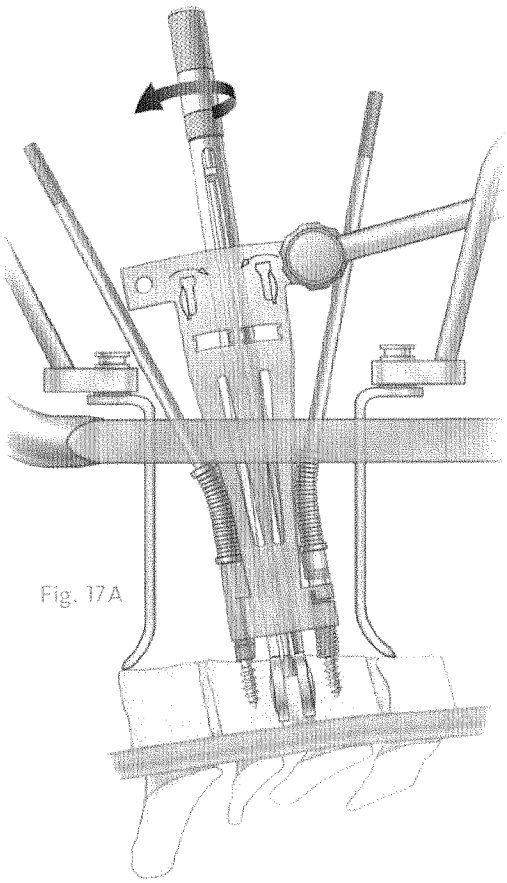

Fig. 17A

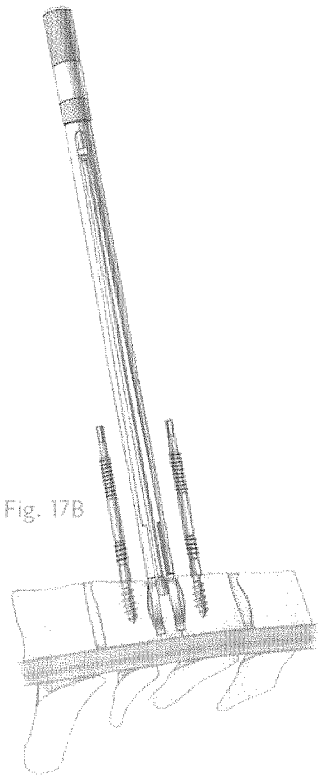

Fig. 17B

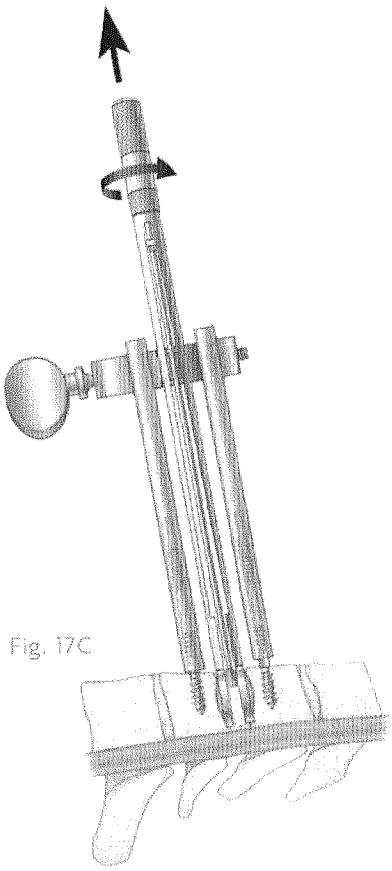

Fig. 17C

Do not distract to a distance greater than that maintained by the Implant Spacer.
Refer to the Surgical Tips section (Page 31) if the Implant Spacer does not fit tightly.

STEP 18 PROSTHESIS PREPARATION

Screw a Seal Plug from the prosthesis package into one port of the BRYAN® Cervical Disc prosthesis (Figure 18A). Grasp the shells of the prosthesis firmly and continue turning until the handle twists off. Position the prosthesis with the remaining open port facing up. Using the Syringe Tip from the prosthesis package and a 3cc or larger syringe filled with sterile saline, slowly inject saline into the open port of the prosthesis until saline, free of air bubbles, flows out of the port. Hold the prosthesis level to avoid loss of the saline (Figure 18B). Remove the syringe and compress the prosthesis until the shells contact the nucleus. Saline should flow out of the open port.

While holding the prosthesis compressed, thread a second Seal Plug into the open port. Maintain the grasp of the shells of the prosthesis and continue turning the plug until the handle twists off (Figure 18C).

Fig. 18A

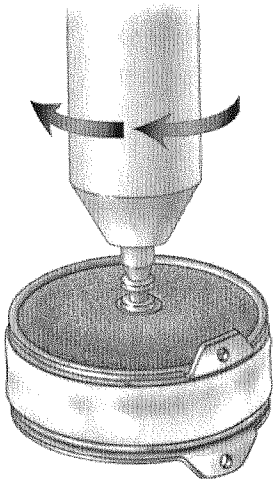

Fig. 18B

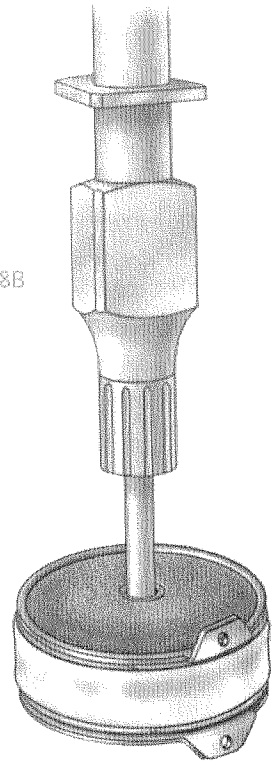

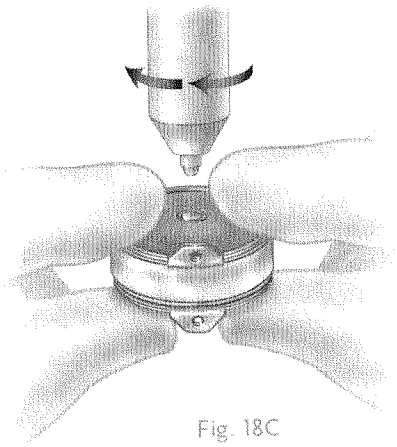

Fig. 18C

STEP 19 PROSTHESIS PLACEMENT AND PROCEDURE COMPLETION

Attach the prosthesis to the **Implant Inserter** by placing the inserter tongs into the holes in the shell flanges (Figure 19A). Using the Implant Inserter, insert the prosthesis into the prepared disc space (Figure 19B); gently tapping into place with a mallet if necessary. If insertion is difficult, expand the tubular distractor, widening the disc space slightly. If the prosthesis requires more than hand pressure or a gentle tap to insert, retract the locking arm sleeve on the Prosthesis Inserter and rotate the sleeve 90 degrees. A slight tap on the tool can then be applied to fully seat the prosthesis. If one shell flange is slightly above the anterior surface of the vertebral body, do not push it further down. This condition is acceptable. Once the implant is positioned (Figure 19c) complete the surgery using standard Anterior Cervical Disc closure procedures. Verify placement of the device using fluoroscopy.

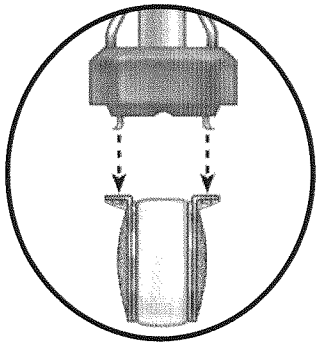

Fig. 19A

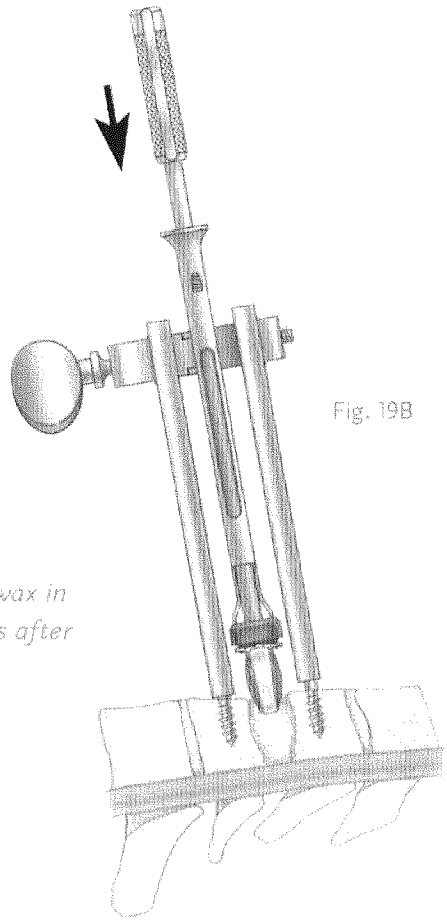

Fig. 19B

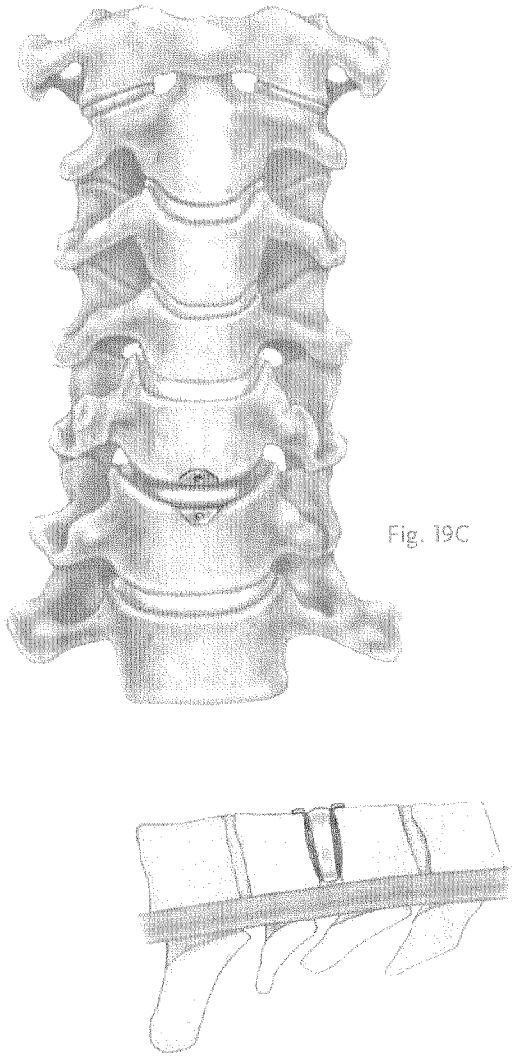

Fig. 19C

Note: Be sure to put bone wax in the anchor post holes after removing them.

SURGERY SET

Cat. No.	Description	Cat. No.	Description
6471011	Retractor Frame	6471360	Transverse Centering Tool
6471012	Blunt Arm	6471371	Sagittal Wedge
6471013	Pilot Arm	6471385	Dual Track Milling Guide
6471020	Right Side Rail Extension	6471400	Alignment Block
6471021	Left Side Rail Extension	6471410	Cephalad Contact Pin
6471030	Rod Clamp	6471411	Caudal Contact Pin
6471031	Vertical Rod	6471430	Milling Guide Brace
6471032	Rod Collar	6471440	Protractor
6471110	Kunzler Clamp	6471460	Anchor Post Driver
6471120	Kunzler Clamp Driver	6471470	Adjustable Drill Guide Driver
6471211	Short Retractor Blade Holder	6471471	Adjustable Drill Guide Locking Wrench
6471212	Medium Retractor Blade Holder	6471490	Sagittal Wedge Removal Tool
6471213	Long Retractor Blade Holder	6471501	Milling Depth Gauge
6471214	Angled Retractor Blade Holder	6471540	Burring Block, 14-16mm
6471251	Blunt Retractor Blade, Ti, 45mm	6471541	Burring Block, 17-18mm
6471252	Blunt Retractor Blade, Ti, 50mm	6471550	Burring Ring, 14mm
6471253	Toothed Retractor Blade, Ti, 35mm	6471551	Burring Ring, 15mm
6471254	Toothed Retractor Blade, Ti, 40mm	6471552	Burring Ring, 16mm
6471255	Toothed Retractor Blade, Ti, 45mm	6471553	Burring Ring, 17mm
6471256	Toothed Retractor Blade, Ti, 50mm	6471554	Burring Ring, 18mm
6471257	Toothed Retractor Blade, Ti, 55mm	6471565	Burring Depth Gauge
6471258	Toothed Retractor Blade, Ti, 60mm	6478100	Drill Bit
6471259	Toothed Retractor Blade, Ti, 65mm	6478230	Fluted Drum Burr, 4.0mm
6471260	Blunt Retractor Blade, Ti, 55mm	6478400	3.5mm Anchor Post
6471261	Blunt Retractor Blade, Ti, 60mm	6478410	4.0mm Anchor Post
6471262	Blunt Retractor Blade, Ti, 65mm	6478420	Anchor Post Nut
6471263	Blunt Retractor Blade, Ti, 70mm	6471511	Milling Handpiece
6478501	Inclinometer	6471520	Milling Disc Driver
6471300	Incision Template	6471521	Milling Disc Wrench
6471311	Cam Distractor, 6.5mm	6471570	Offset Burring Handpiece
6471312	Cam Distractor, 8.5mm	6471580	Centered Burring Handpiece
6471321	Sagittal Retainer, 6mm	6471596	Implant Spacer, 14-16mm
6471322	Sagittal Retainer, 8mm	6471597	Implant Spacer, 17-18mm
6471343	MIDAS REX® Adapter MR Classic	6471600	Anchor Post Distractor
6471344	MIDAS REX® Adapter MR III	6471610	Implant Inserter
6471350	Drilling Handpiece		
6471351	MIDAS REX® LEGEND® Adapter		
6478210	Fluted Ball Burr, 4.8mm		
6478211	Fluted Ball Burr, 2.0mm		

ANCILLARY EQUIPMENT

Cat. No.	Description	Cat. No.	Description
6476020	BRYAN® Cervical Disc Template Set	6478805	Electric Drive System with Case
6478500	Goniometer	6478850	BRYAN® Cervical Disc, 3 Case Set
6478600	Centering Level		

DRIVE SYSTEM OPTIONS

To use the drive system, insert the BRYAN® Cervical Disc Handpieces directly onto the handheld motor until fully seated. The attachment will snap into position when fully seated. Firmly pull the handpiece to remove.

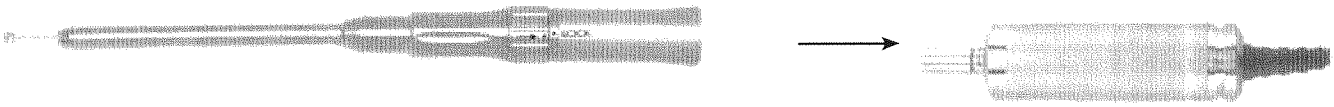

MIDAS REX® DRIVE SYSTEM

To use the MIDAS REX® LEGEND® Motor, attach the MIDAS REX® LEGEND® Adapter (6471351) to the motor and secure in place. If using the pneumatic system, supply pressure must be set to 80psi. If using the electric system, speed must be set to 27,000 RPM.

Attach the BRYAN® Cervical Disc Handpiece to the MIDAS REX® LEGEND Adapter for use. Pull the handpiece to remove.

To use the MIDAS REX® III Motor, screw the MIDAS REX® III Adapter (6471344) onto the motor and hand tighten by turning counter-clockwise. Supply pressure should not be below 100psi.

Attach the BRYAN® Cervical Disc Handpieces firmly onto the MIDAS REX® Adapters for use. Firmly pull the handpiece to remove.

MIDAS REX® LEGEND® Motor

MIDAS REX® LEGEND® Adapter

MIDAS REX® LEGEND® Motor

MIDAS REX® III Motor

MIDAS REX® III Adapter

MIDAS REX® III Motor

MIDAS REX® Classic Motor

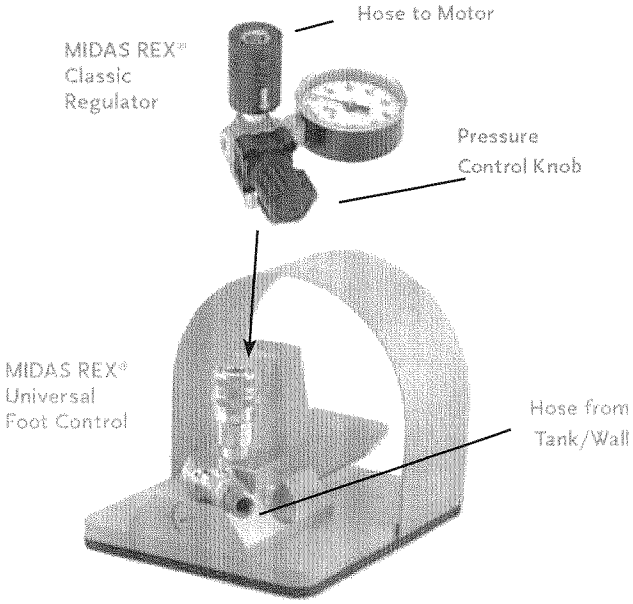

To use the MIDAS REX® Classic Motor, attach the MIDAS REX® Classic Regulator (6471345) and MIDAS REX® Classic Adapter (6471343).

1. Install the MIDAS REX® Classic Regulator between the Universal Foot Control and the Motor Hose. Set the Regulator to 70 psi.
2. Insert 4-Pin Driver (included with 6471343) into collet of Motor until Driver is seated. Tighten collet nut with the MIDAS Rod and Wrench. Insert the Motor into the Adapter and turn counter-clockwise to tighten.

MIDAS REX® Adapter

4-Pin Driver

MIDAS REX® Classic Motor

BURR ATTACHMENT

Burr/Bit Attachment to Drilling Handpiece

Insert the burr into the handpiece and rotate it until you feel it engage the internal drive pin. Lock the burr by turning the locking ring clockwise. The arrow and the dot on the locking ring will line up with the word "LOCK". Verify the burr is in place by pulling on the end of the burr. The burr will not lock in place if it is not properly seated. To remove the burr/bit, unlock the handpiece by rotating the locking ring counter-clockwise. The arrow and dot will line up with the word "UNLOCK."

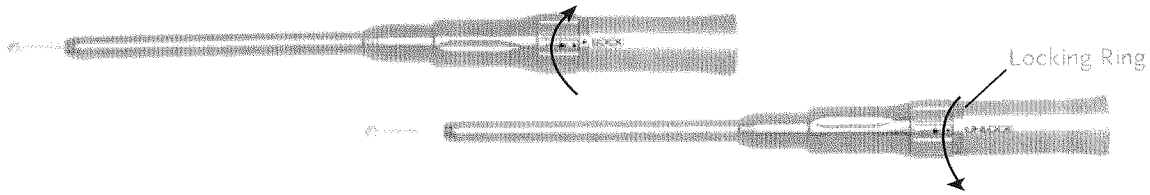

Note: Do not lock the handpiece without a drill bit or burr inserted.

DUAL TRACK MILLING GUIDE PLACEMENT

Unable to Verify Dual Track Milling Guide/Vertebral Body Relative Position

The Dual Track Milling Guide must remain seated against the anterior surface of the caudal vertebral body to ensure correct alignment. If the Dual Track Milling Guide will not sit against the vertebral body due to soft tissue, re-burr the anterior surface after removing the guide and brace. The Sagittal Wedge may remain in place during the re-burring or it may be removed. Check contact of the Dual Track Milling Guide with the contact gauges.

In the event the adjustable drill guide on the Milling Guide does not seat completely against the cephalic vertebral body, it may be necessary to re-establish lordosis beginning with re-positioning of the patient and table.

Unable to Install Anchor Post

The **4.0mm Anchor Post** should be used if the standard size (3.5mm) strips the bone or if adequate purchase is not achieved.

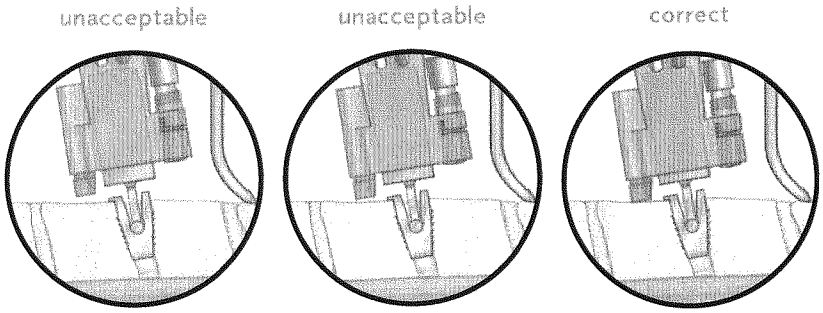

Critical to establishing the initial and all subsequent reference points is the continuous contact of the caudal drill guide to the bone. Confirm whether the Dual Track Milling Guide is seated with the red caudal contact pin and with fluoroscopy, if needed.

BURRING

Burr is Too Long or Too Short

If the burr is longer than the depth gauge or more than 1mm shorter, perform the following checks: verify the burr is installed properly in the handpiece; verify the correct size burring ring has been selected; verify the ring is screwed flush to the flange; verify the Milling Guide has not lifted off the vertebral body. Use of the fluoroscope to verify measurements may be necessary if these checks do not eliminate this condition.

- Reduce the prosthesis size if the burr is longer than the depth gauge.
- Increase the prosthesis size if the burr is more than 1mm shorter than the depth gauge.

Repeat Burring Depth Verification (Step 14).

When working in the posterior disc space, the surgeon should monitor the patient for cerebral spinal fluid (CSF) leaks. Leaks should be controlled per standard surgical procedures. The surgeon may proceed when safe to do so.

MILLING

Milling Handpiece Does Not Function

If the Milling Disc does not spin, replace Milling Handpiece with back-up unit and reset depth of milling as previously described (Step 13). In the event of difficulties resulting from the Drive System, consult the Operating Manual.

Note: Do not mill the prosthesis concavities by hand, as this will not provide the proper placement or fit.

IMPLANTATION

Implant Spacer Does Not Fit Tightly

If the Implant Spacer appears to fit loosely, proceed cautiously with final insertion of the prosthesis to better assess the extent of loose fit. To provide adequate closure or contraction of the vertebral bodies around the prosthesis, external sources of traction may be removed.

Device is Misplaced

In the event of misplacement of the device, the surgeon is encouraged to revise or remove the prosthesis immediately and proceed to fuse the patient, if appropriate.

Package insert will be placed here upon approval.

listen. respond. deliver.

The surgical technique shown is for illustrative purposes only. The technique(s) actually employed in each case will always depend upon the medical judgement of the surgeon exercised before and during surgery as to the best mode of treatment for each patient. Please see the package insert for the complete list of indications, warnings, precautions, and other medical information.

MEDTRONIC SOFAMOR DANEK USA, INC.
Spinal Division
Worldwide Headquarters
1800 Pyramid Place
Memphis, TN 38132
(901) 396-3133
(800) 876-3133
Customer Service: (800) 933-2635
www.sofamordanek.com
For more information go to www.myspinetools.com

IRN2579/056
©2006 Medtronic Sofamor Danek USA, Inc.
All Rights Reserved.

CONFIDENTIAL

ACCEL™
Instrumentation

DRAFT

Medtronic

BRYAN® CERVICAL DISC

Surgical Technique shown with ACCEL™ Instrumentation

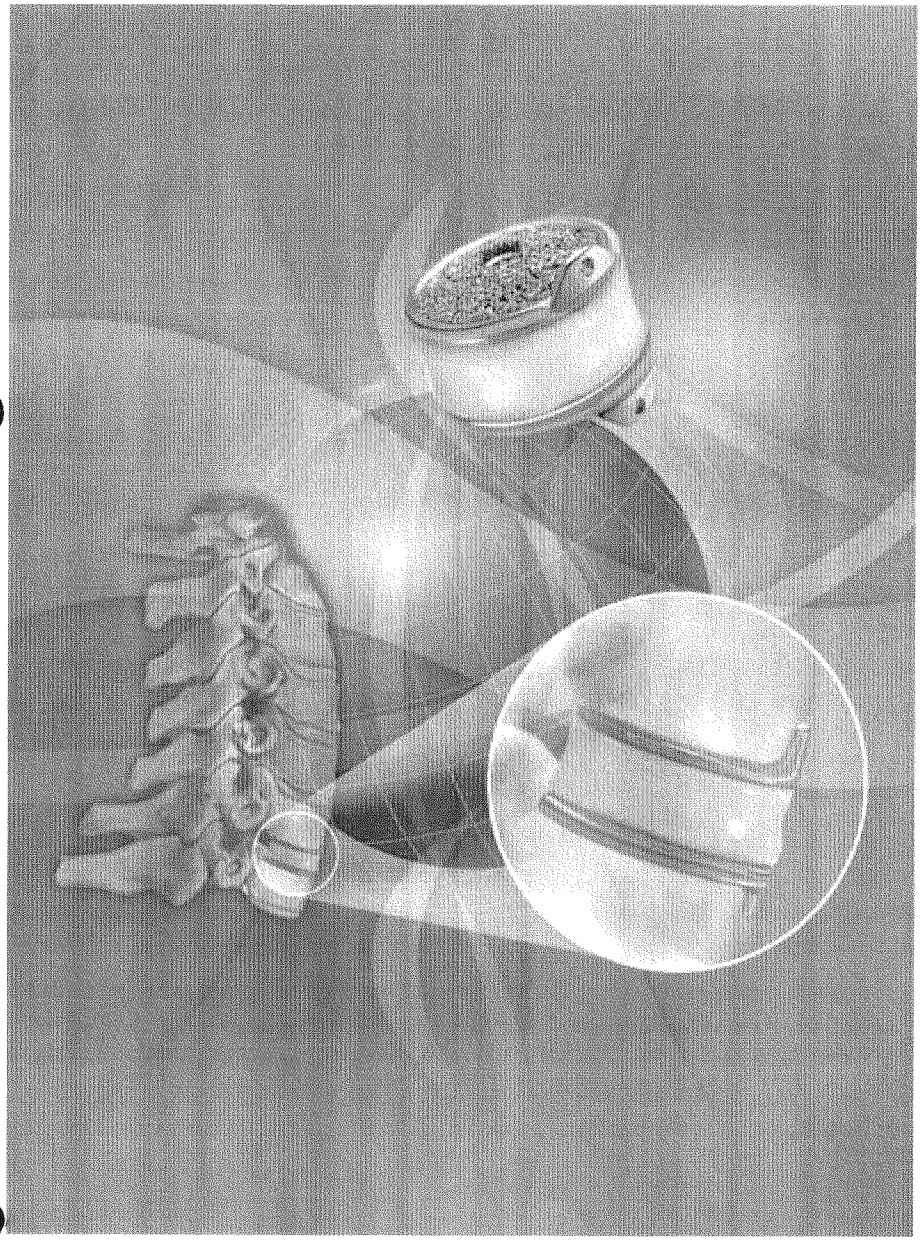

MICHELSON TECHNOLOGY AT WORK

Version A

CONFIDENTIAL

TABLE OF CONTENTS

INTRODUCTION	2
PREOPERATIVE MEASUREMENT	3
PATIENT POSITIONING	4
EXPOSURE	5
DISCECTOMY	6
TRANSVERSE CENTERING	7
DISTRACTION	9
ANCHOR POST PLACEMENT	10
DISTRACTION/DECOMPRESSION	13
PROSTHESIS SIZING	14
DISC SPACE TRIALING	16
MILLING	17
IMPLANTATION	20
PRODUCT ORDERING INFORMATION	21
DRIVE SYSTEM OPTIONS	22
IMPORTANT PRODUCT INFORMATION	23

INTRODUCTION

The surgical benefits of an anterior approach to the cervical spine in the management of the intractable symptoms and signs associated with degenerative disc disease are widely appreciated. Usually, the symptomatic functional spinal unit (FSU) is mobile and mechanically stable preoperatively. Anterior cervical disc fusion, though providing symptomatic relief, has the disadvantage of converting the operated segment to a non-functional spinal unit. As a result, increased stress takes place at adjacent levels, which may, in turn, result in hypermobility and subsequent mechanical instability and/or accelerated degeneration.

The BRYAN® Cervical Disc couples normal kinematics of the cervical spine with the surgical benefits of an anterior approach to the cervical spine and the symptomatic relief provided by decompression. Further, the BRYAN® Cervical Disc leverages significant clinical experience dating back to 2000.

In an effort to facilitate accurate and reproducible implantation of a BRYAN® Cervical Disc, this technique features surgical notes and pearls that will serve as valuable points of information. Surgical notes refer to various surgical steps that require emphasis throughout the procedure. Surgical pearls refer to helpful tips that will facilitate implantation of a BRYAN® Cervical Disc. Both should be consistently incorporated into the surgical technique.

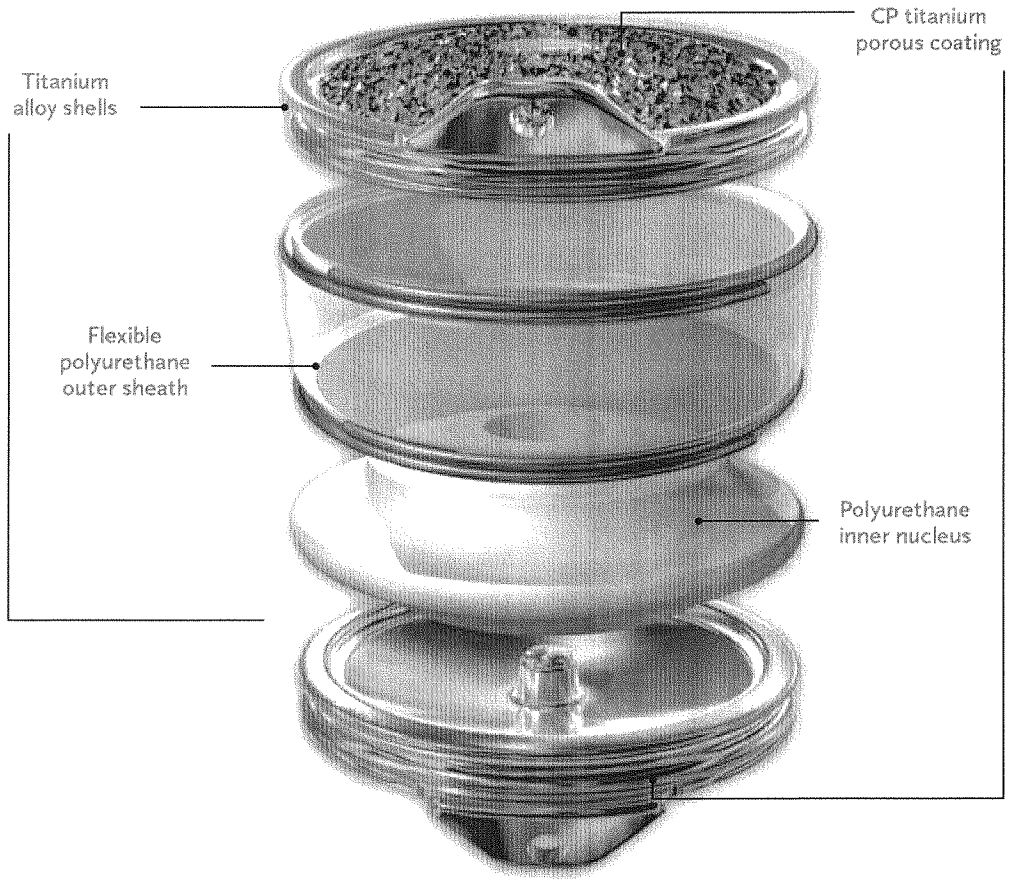

CONFIDENTIAL

Using a computed tomography (CT) or magnetic resonance image (MRI) obtained so that the slices are parallel to the vertebral body endplates, determine the smaller of the two vertebral body endplates at the target disc space. The use of a CT image is preferred. Do not include spurs or ridges that will be removed in the subsequent burring process. Determine the magnification factor of the image using the **BRYAN® Cervical Disc Template Set** (*Figure 1a, 1b*). Choose the prosthesis template corresponding to the measured magnification factor and follow the instructions on the template to estimate the prosthesis size (*Figure 1c*).

NOTE *Templating provides only approximate sizing. This initial assessment may vary due to magnification factors inherent in CT or MRI images. Exact device sizing is determined during the prosthesis sizing and disc space trialing steps.*

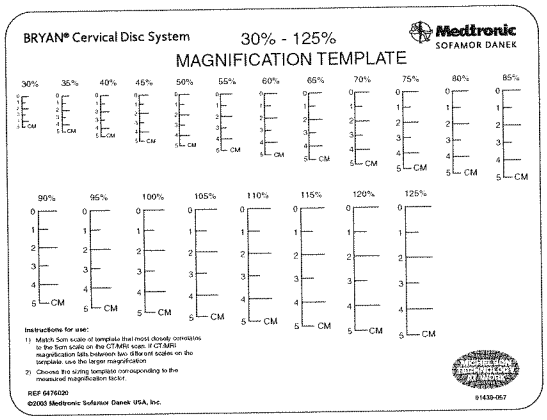

Figure 1a

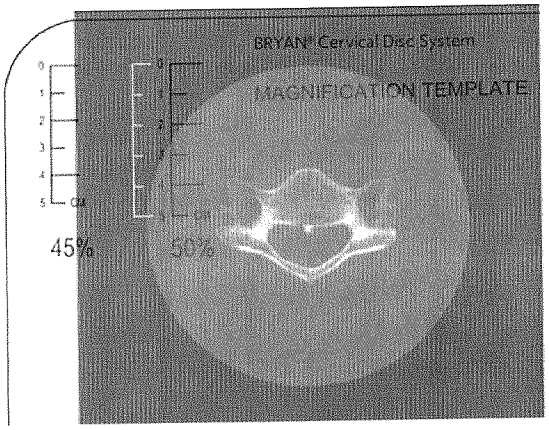

Figure 1b

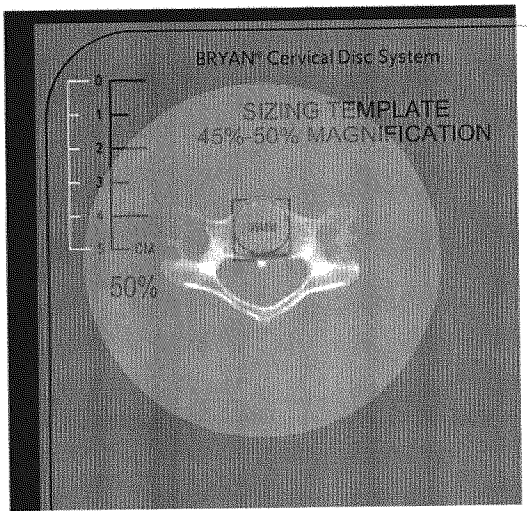

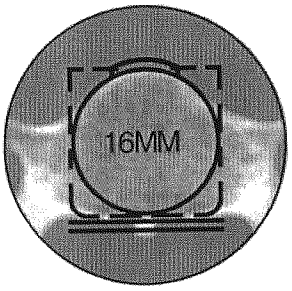

Figure 1c

Medtronic

CONFIDENTIAL

STEP 2. PATIENT POSITIONING

The patient is placed in the supine position with the head and neck in a **neutral position** (*Figure 2*). The posterior cervical spine should be supported to establish and maintain this position. A standard right-sided or left-sided approach to the cervical vertebral column may be used.

NOTE *Neck position should mirror the preoperative standing neutral lateral x-rays and remain fixed throughout the procedure. Failure to reproduce pre-operative neutral neck position may result in improper implant position or improper sagittal balance of the cervical spine at the operative level.*

NOTE *Both shoulders may be pulled down and secured for better visualization of the lower cervical spine during fluoroscopy if necessary. It will be necessary to perform a fusion procedure if visualization of the target disc space does not allow for an optimal lateral view.*

NOTE *Use standard methods to identify the correct disc level.*

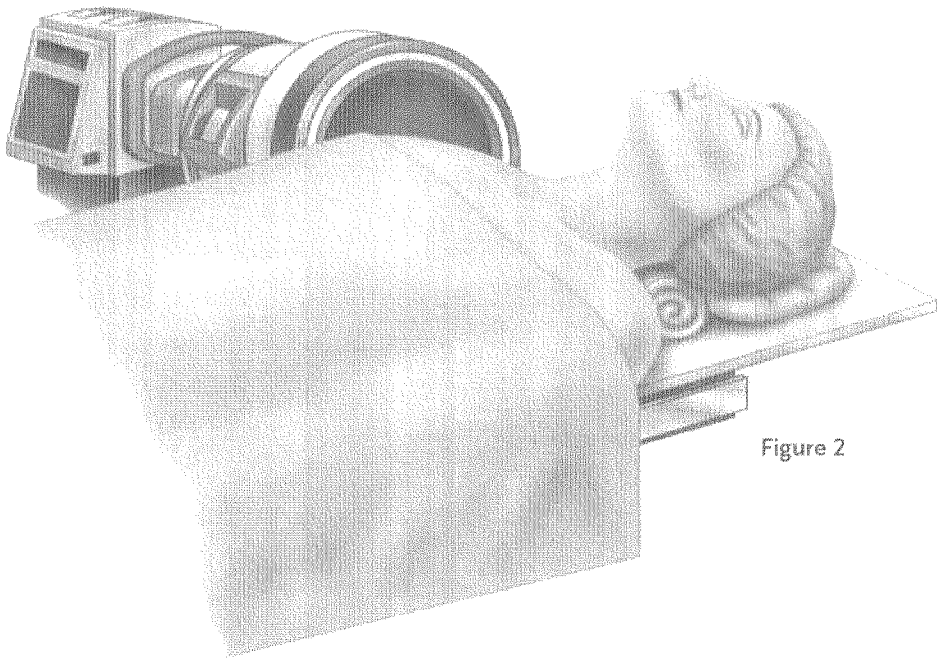

Figure 2

CONFIDENTIAL

Typically, a transverse skin incision is made. An avascular dissection plane is developed between the trachea and the esophagus medially, and the carotid sheath laterally. Hand-held retractors are utilized to provide exposure of the anterior vertebral column and the adjacent longus colli muscles (*Figure 3*).

After the anterior vertebral column has been exposed, the longus colli muscles are elevated and the medial/lateral self-retaining retractor blades are positioned beneath them.

NOTE *The presence of anatomical abnormalities and/or deformities may reduce the surgeon's ability to ensure proper placement of the instrumentation and/or prosthesis. Under such circumstances, it may be necessary to perform a fusion procedure.*

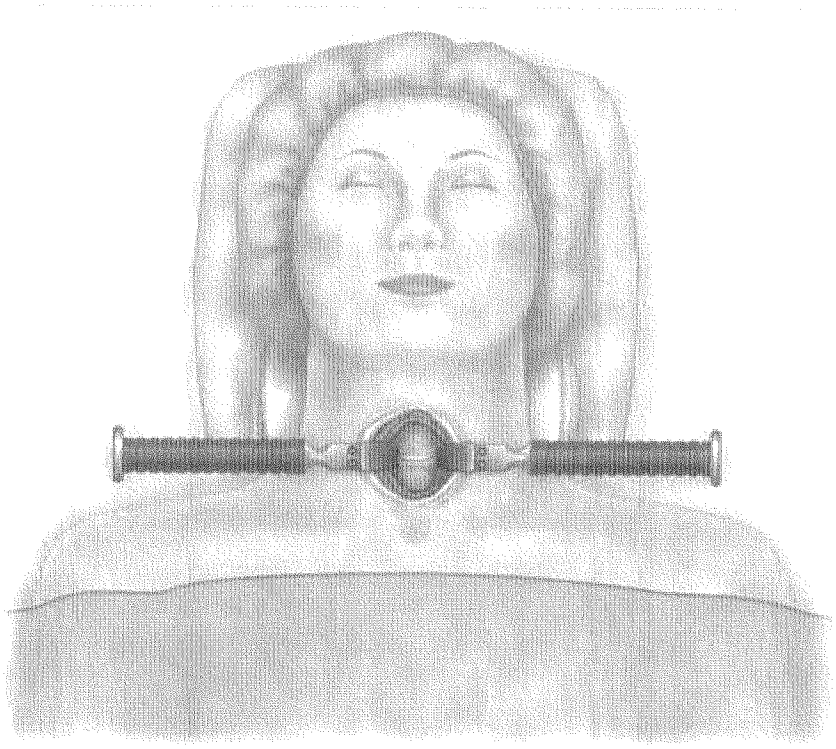

Figure 3

DISCECTOMY

A standard anterior cervical discectomy is completed at the indicated level utilizing common retraction instrumentation (*Figure 4*). Pituitaries, curettes and kerrisons may be used to remove the disc material and endplate cartilage. Expose the bilateral uncinate processes as well as the posterior longitudinal ligament. Do not remove any part of the uncinate processes as they will serve as reference points for locating the center of the disc space.

Connect the **Drilling Handpiece** to the **MIDAS REX® System** or **Surgical Drive System**. Lightly burr the anterior surfaces of the vertebral bodies using the **4.8mm Fluted Ball Burr** to remove any soft tissue and bony protrusions to create a flat surface (*Figure 5*).

NOTE *The MIDAS REX® LEGEND®, MIDAS REX® III and MIDAS REX® CLASSIC Systems require adapters (See Drive System Options).*

Insert a Kerrison Rongeur into the disc space to remove the anterior lip of bone on the cephalad vertebral body. Keep the fixed shaft of the instrument parallel to the caudal endplate (*Figure 6*).

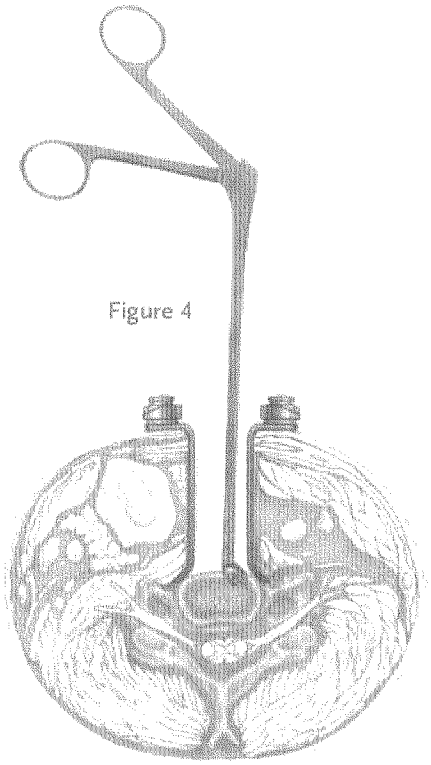

Figure 4

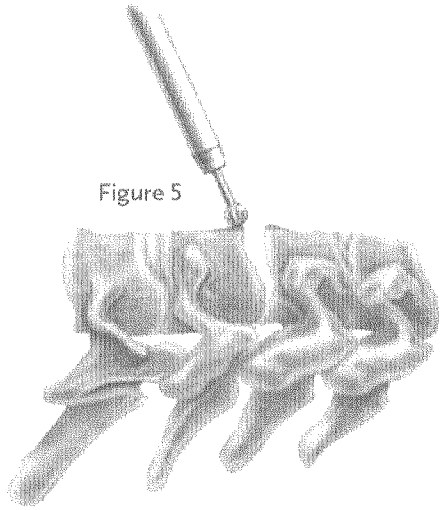

Figure 5

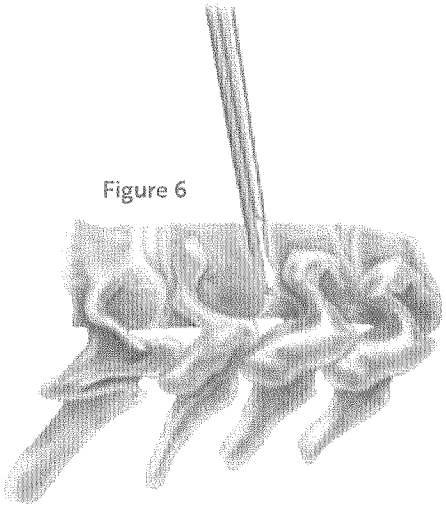

Figure 6

CONFIDENTIAL

Place a **Centering Level** on the **Transverse Centering Tool** and insert into the target disc space (*Figure 7a*). Expand the tips of the tool until they contact the lateral soft margins (*Figure 7b*).

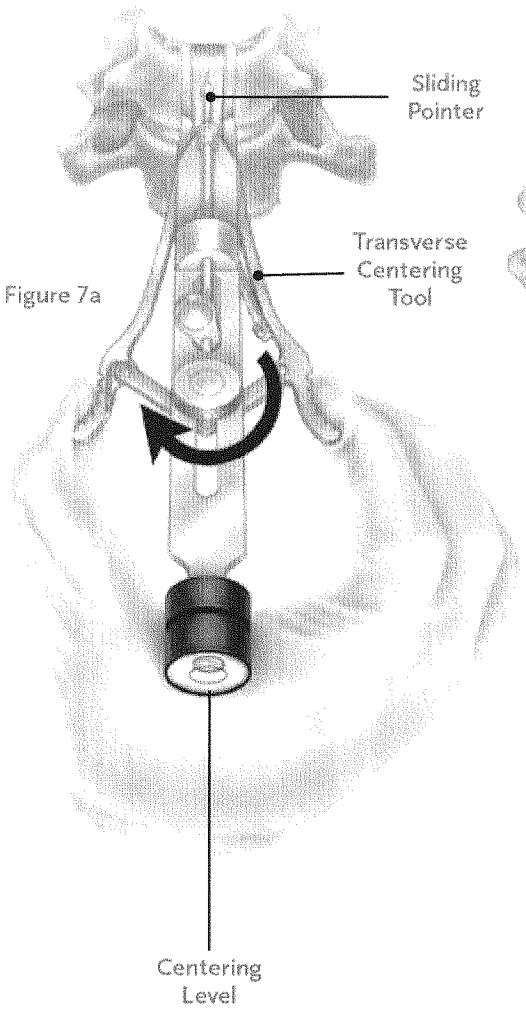

Figure 7a

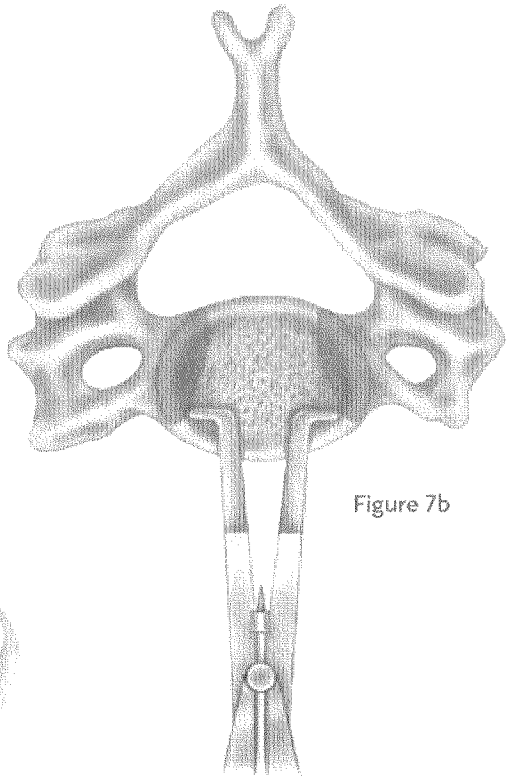

Figure 7b

When the bubble is centered in the lateral direction (*Figure 8*), mark the center point of the superior vertebral body by advancing the sliding pointer (*Figure 9*). Extend the midline superiorly using a Bovie or sterile marker.

If the midline position is still in question an A/P radiograph should be obtained to confirm the midline position.

When using the Centering Level to position the Transverse Centering Tool, the bubble must be centered only in the transverse plane.

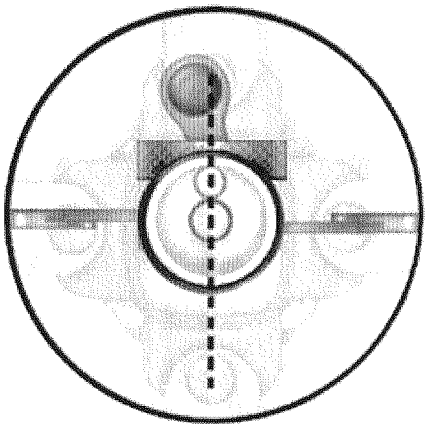

Figure 8

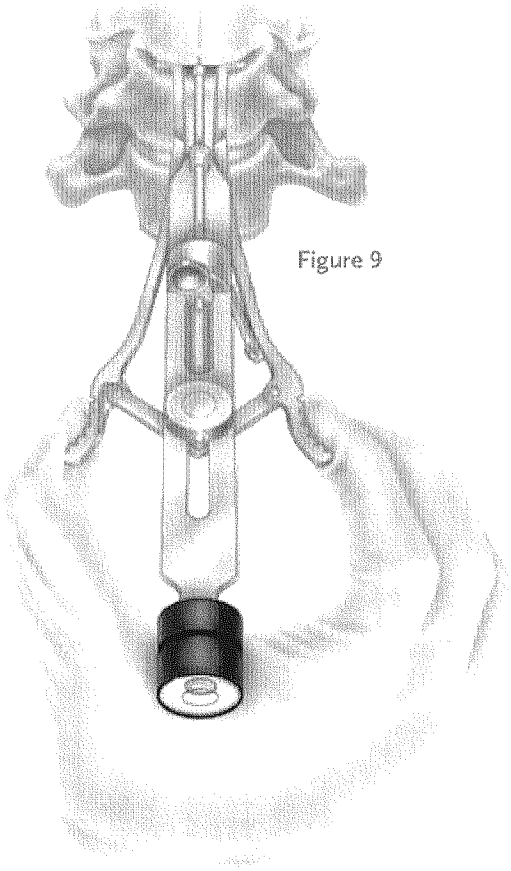

Figure 9

CONFIDENTIAL

Insert the **Intradiscal Distractor** into the target disc space and carefully distract until reaching the 8.5mm hard stop (*Figure 10*). After achieving 8.5mm of distraction, maintain distraction for 60 seconds to adequately stretch the ligaments.

NOTE *An opening of the target disc space greater than 8.5mm may lead to improper fit of the prosthesis and is an indication for terminating the procedure and fusing the patient.*

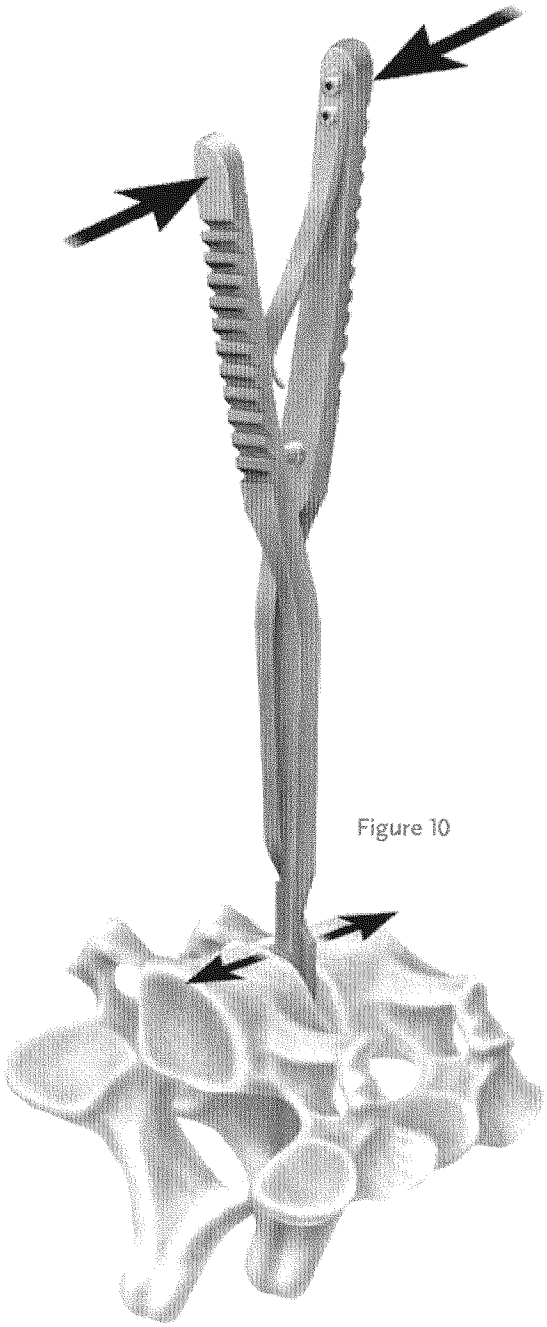

Figure 10

STEP 7 ANCHOR POST PLACEMENT

Select the **Alignment Guide** that will most closely match the neutral disc space height. Attach the **Milling Guides** (*Figure 11*) and place the construct in the target disc space (*Figure 12*). The construct should be relatively stable in the disc space with no vertebral distraction.

NOTE *The goal is not to distract the vertebral bodies.*

NOTE *If none of the Alignment Guides constructs are relatively stable in the disc space, an alternative treatment option should be considered.*

Insert a Steinmann Pin or similar instrument into the reference point made by the transverse centering tool. Slide the superior Milling Guide over the reference pin to maintain midline positioning.

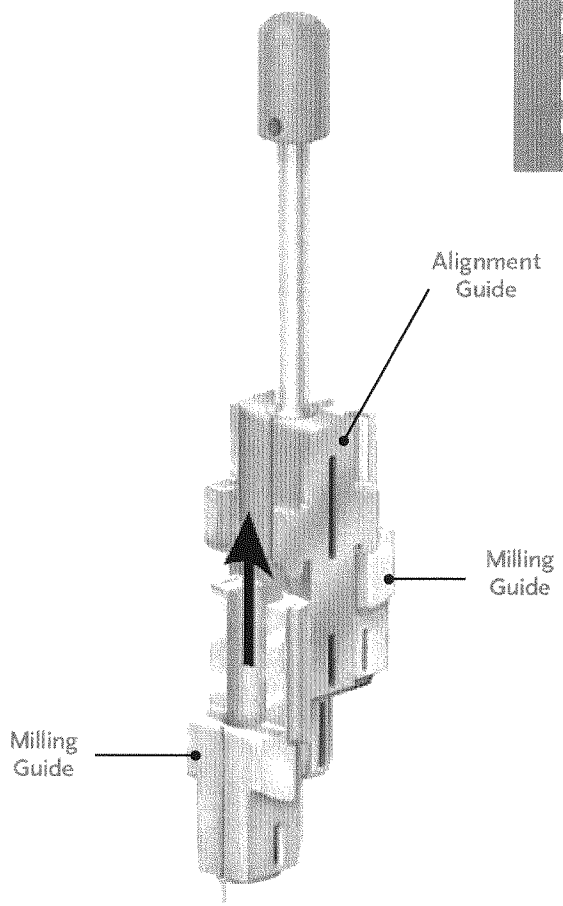

Figure 11

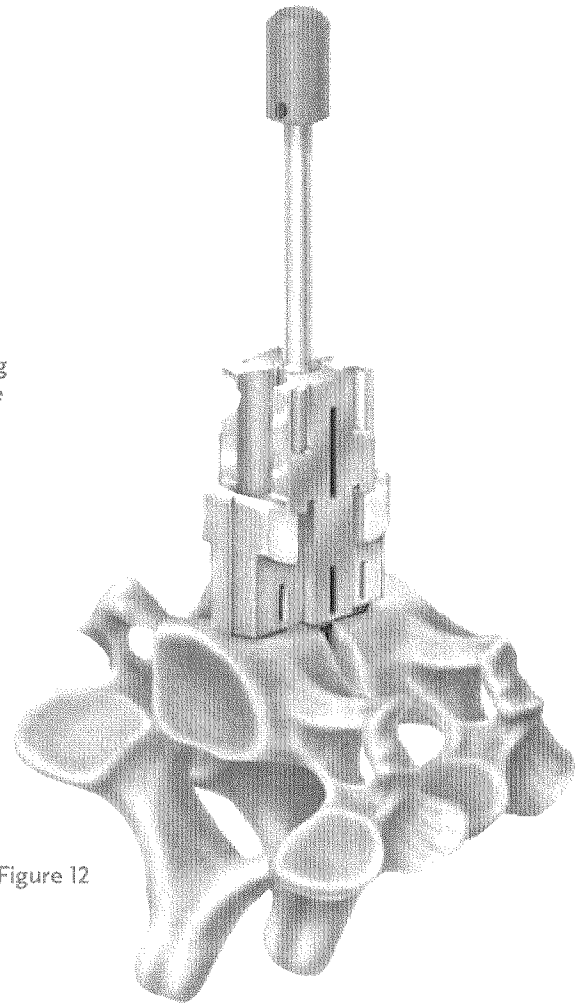

Figure 12

CONFIDENTIAL

Place the Centering Level on the **Stabilizer** and attach it to the Alignment Guide construct (*Figure 13*). Using the bubble as a visual aid, center the assembly in the lateral direction.

Using a lateral fluoroscopy, verify that the Alignment Visualization Slots are parallel to the endplates and centered in the disc space (*Figure 14*).

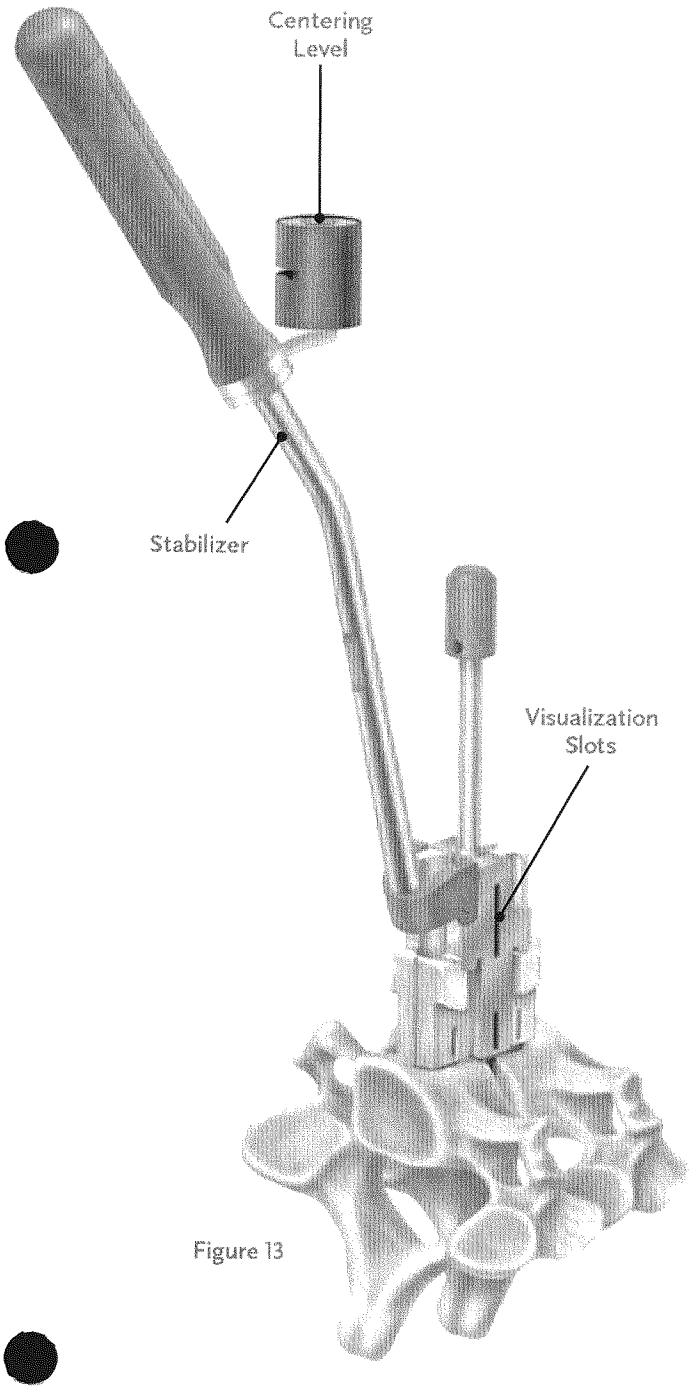

Figure 13

The shaft of the Fluted Ball Burr can also be inserted through the Alignment Guide to verify sagittal alignment.

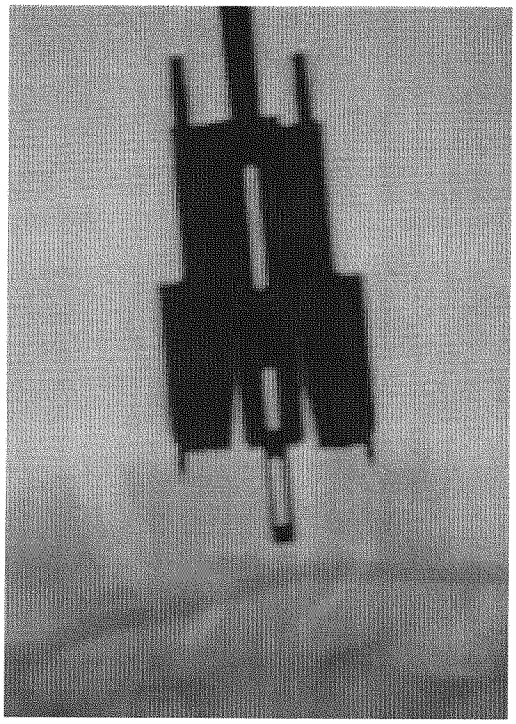

Figure 14

Attach the **Drill Bit** to the **Drilling Handpiece** and drill the superior Anchor Post Pilot Hole through the Milling Guide (*Figure 15*). Insert the appropriate **Anchor Post** into the **Anchor Post Driver** (*Figure 16*). Drive the Anchor Post through the Milling Guide until it is fully seated. Repeat for inferior Anchor Post Placement.

NOTE *The Stabilizer Handle should be used when securing the Milling Guides to the vertebral bodies.*

NOTE *Anchor Posts are available in 14mm or 16mm lengths and 3.5mm or 4.0mm diameter. The 4.0mm Anchor Post can be used if the 3.5mm Anchor Post becomes unstable.*

The approriate sized Anchor Post is determined based on preoperative templating. Select the longest possible Anchor Post ensuring that its length does not exceed the diameter of the selected prosthesis.

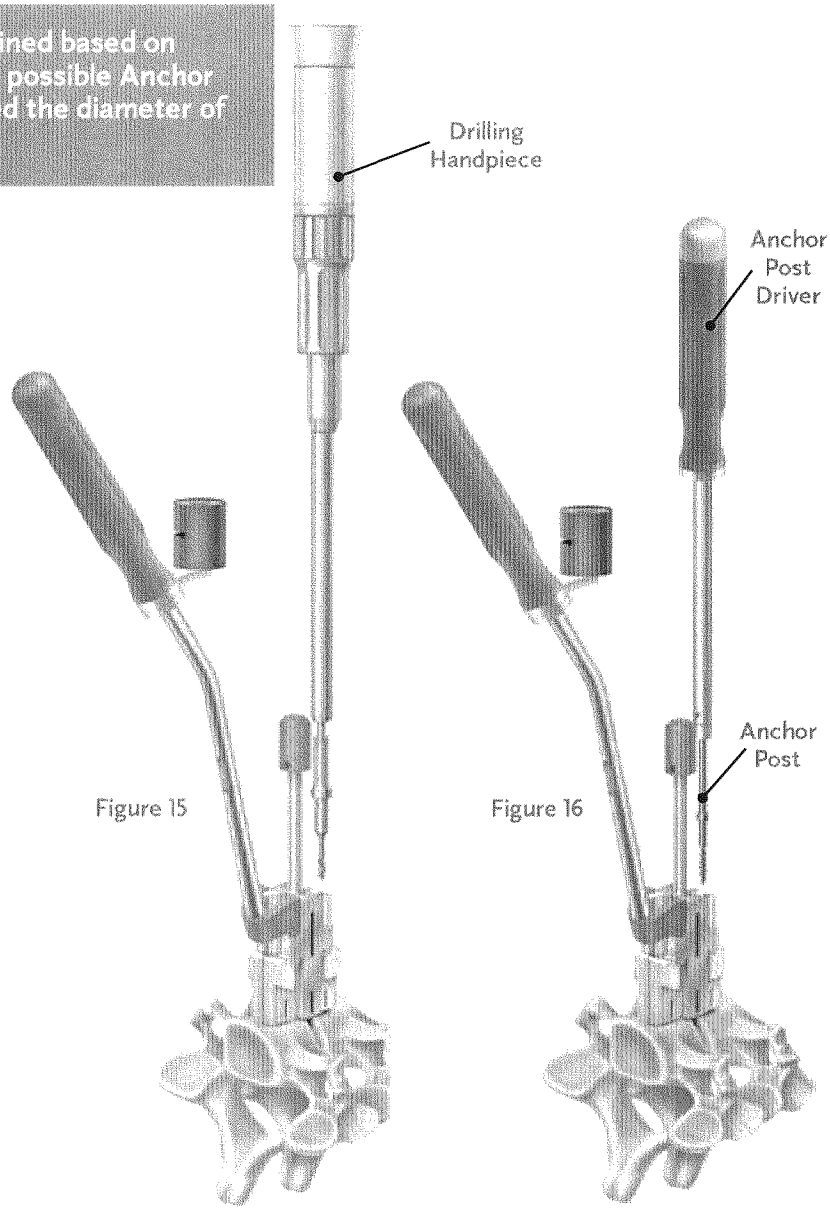

Figure 15

Figure 16

CONFIDENTIAL

Attach the **Distractor** to the Anchor Posts and remove the Alignment Guide (*Figure 17*).

Re-insert the Intradiscal Distractor and carefully distract the disc space (*Figure 18*). Distraction should be performed using the Intradiscal Distractor in order to preserve the integrity of the screw-bone interface. The Distractor Key should only be used if additional distraction is required. Perform a thorough and complete decompression (*Figure 19*).

NOTE *Since the BRYAN® Cervical Disc prosthesis is a motion sparing device, a thorough bi-lateral decompression must be performed. Ensure all osteophytes and disc fragments are removed.*

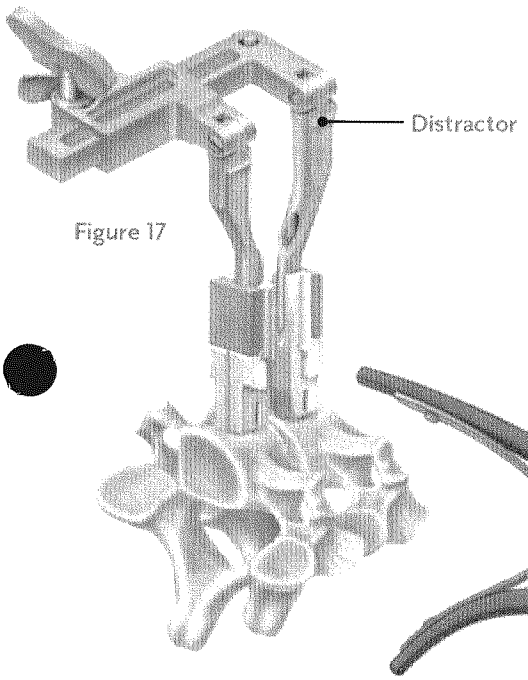

Figure 17

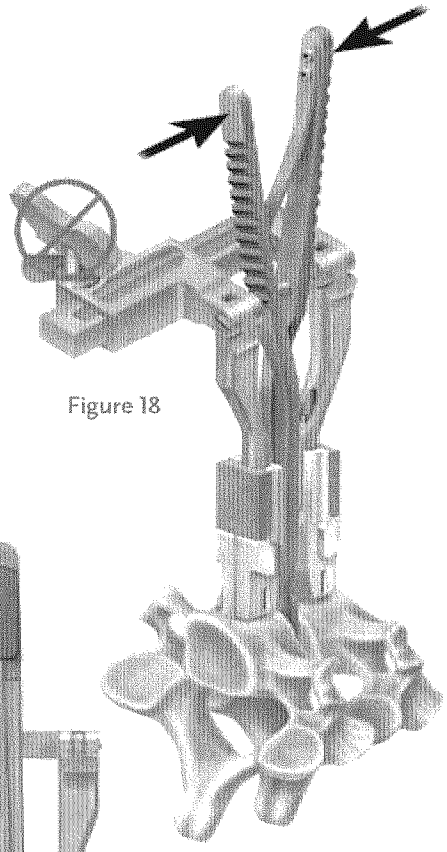

Figure 18

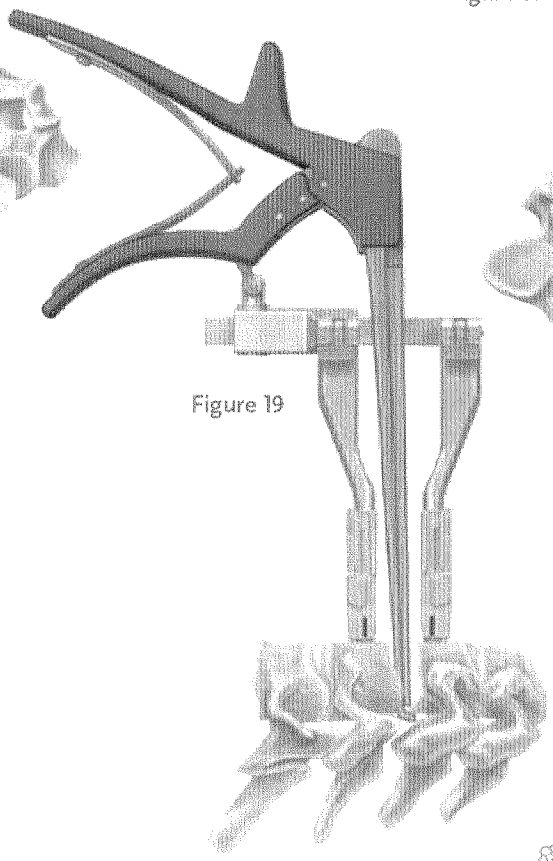

Figure 19

Retract the **Depth Gauge** stylus and hold in the 12mm position. Carefully slide the Depth Gauge into the guide slot of superior Milling Guide. Make sure the Depth Gauge is fully seated and use the stylus to assess the posterior margin (*Figure 20*). Verify this position with fluoroscopy (*Figure 21*).

NOTE *The end of the Depth Gauge shaft must be even with the anterior surface of the vertebral body before measuring endplate depth. Lateral fluoroscopy should be used to verify proper Depth Gauge placement and position of the stylus.*

NOTE *The laser etched line on the Depth Gauge, when even with the top of the Milling Guide, visually confirms that the Depth Gauge is fully seated.*

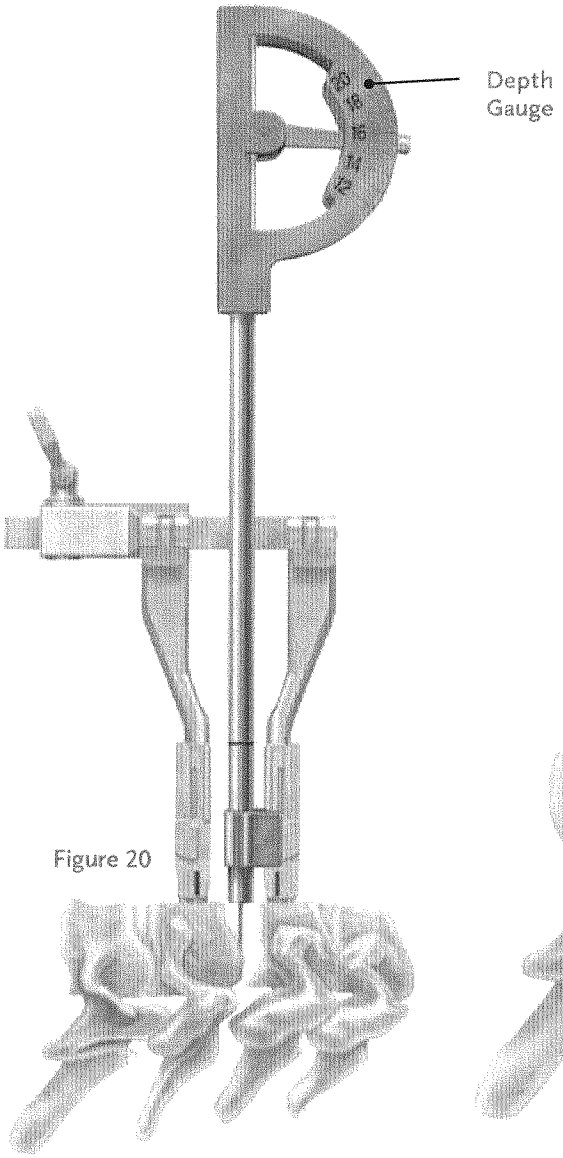

Figure 20

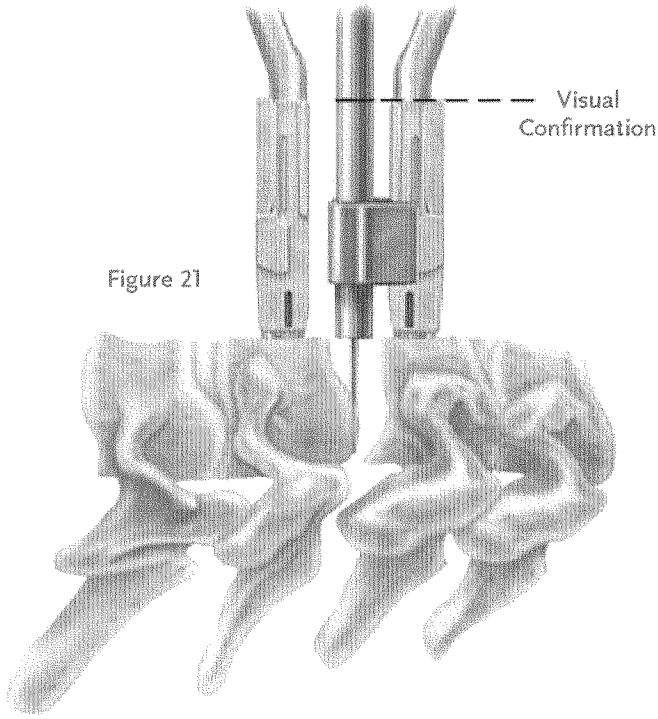

Figure 21

CONFIDENTIAL

Measure the endplate depth using the sizing scale (*Figure 22*). Repeat the process using the inferior Milling Guide (*Figure 23*). Choose the smaller of the two endplate sizes as indicated by the sizing scale.

NOTE *If the size indicated on the sizing scale falls between two sizes, choose the smaller size.*

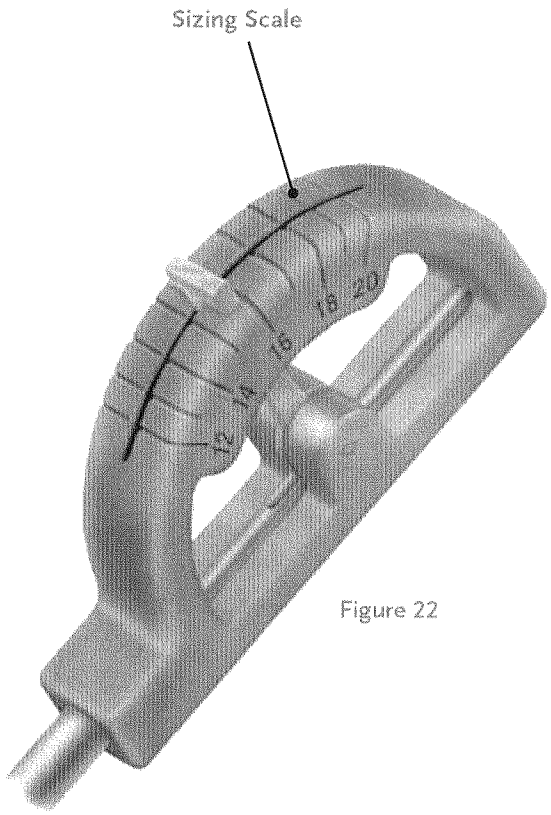

Figure 22

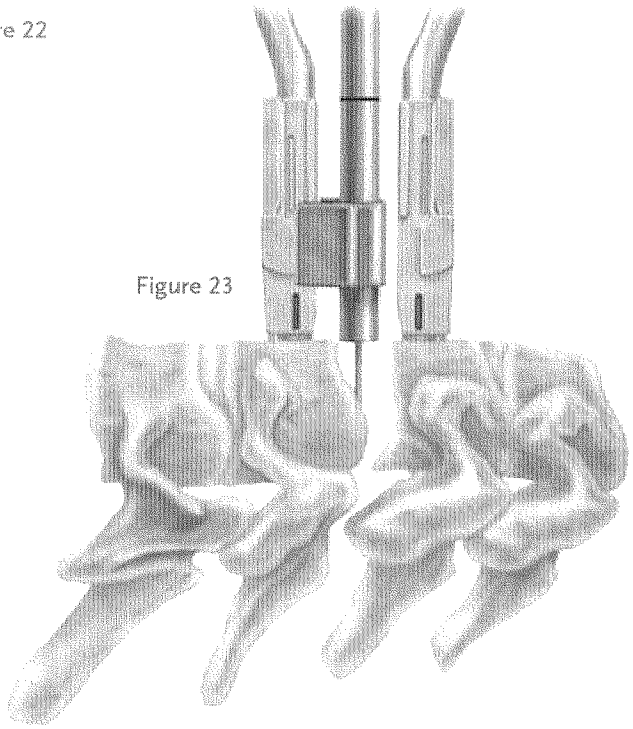

Figure 23

STEP 10 DISC SPACE TRIALING

Use the appropriate size **Dual Headed Sequential Rasp** as indicated by the Depth Gauge to ensure endplate preparation and disc space height (*Figure 24*). If necessary, the Sequential Rasp may be used with the **Mallet** to remove additional bone (*Figure 25*).

NOTE *The 8.5mm Rasp must fit, fully seated, in the disc space to ensure enough clearance for the milling device.*

NOTE *Dual-headed Sequential Rasps are available in 14mm-18mm to mirror the implant offering.*

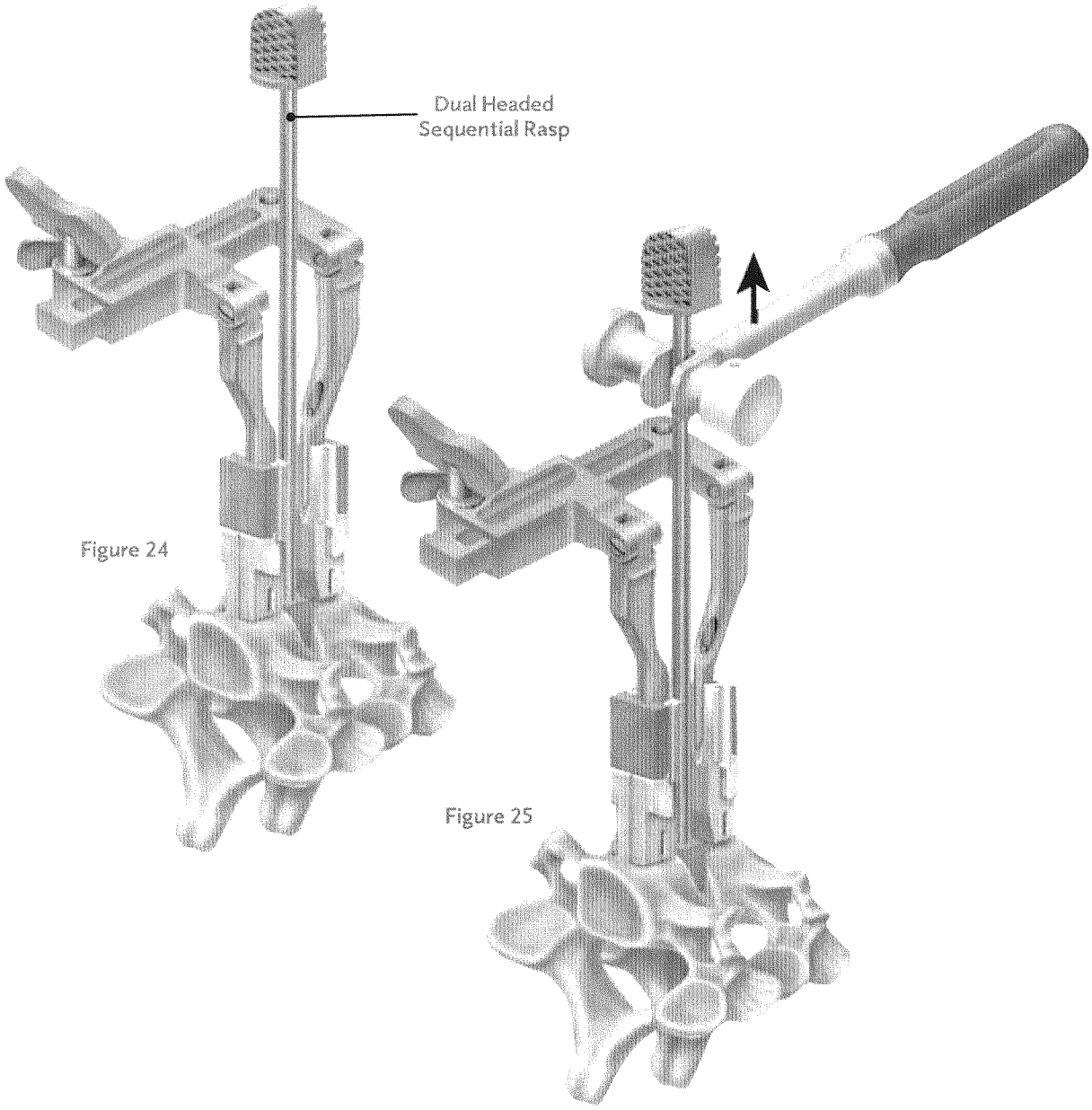

Figure 24

Figure 25

CONFIDENTIAL

Select the appropriate **Disposable Milling Assembly** and insert through the **Milling Handpiece** (*Figure 26*), ensuring that the appropriate assembly aligns with the keyway of the Milling Handpiece. Place the construct on the **Milling Assembly Tool**, ensuring that the arrow on the Milling Handpiece lines up with the arrow on the Milling Assembly Tool (*Figure 27*). Squeeze the Milling Assembly Tool until the Disposable Milling Assembly fully engages the Milling Handpiece (*Figure 28*).

NOTE *To ensure the Disposable Milling Assembly is fully seated in the Milling Handpiece, the red indicator should not be visible on the Disposable Milling Assembly.*

NOTE *Disposable Milling Assemblies are available in diameters of 14mm-18mm to mirror the implant offering.*

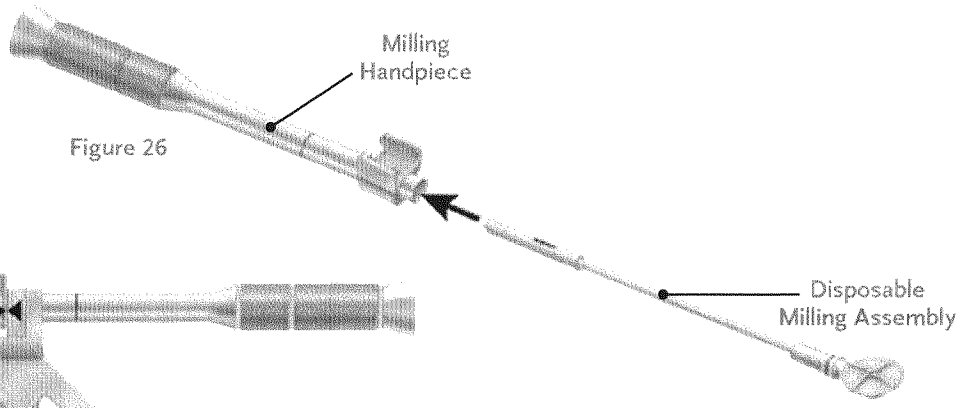

Figure 26

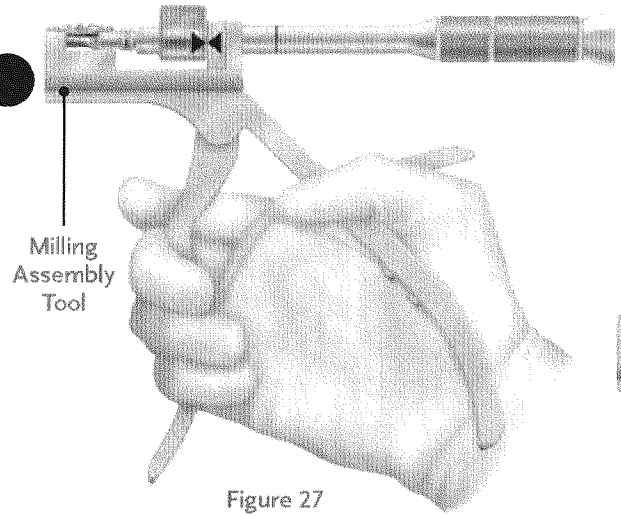

Figure 27

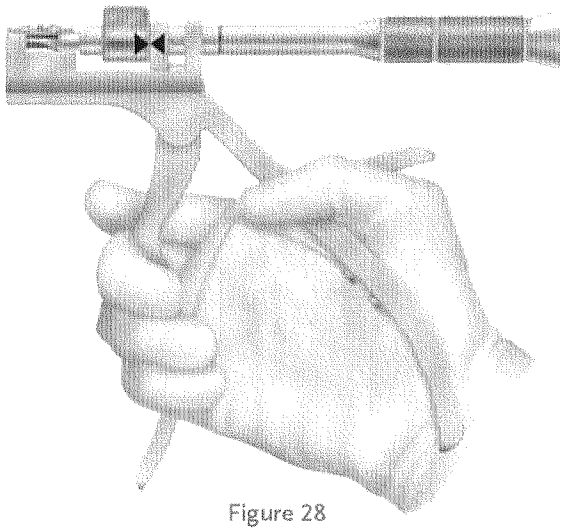

Figure 28

After the milling step is complete disengage the Disposable Milling Assembly from the Milling Handpiece by repositioning the Milling Handpiece so that the arrow on the Milling Handpiece points in the opposite direction as the arrow on the Milling Assembly Tool (*Figure 29*). Squeeze the Milling Assembly Tool to disengage the Disposable Milling Assembly (*Figure 30*).

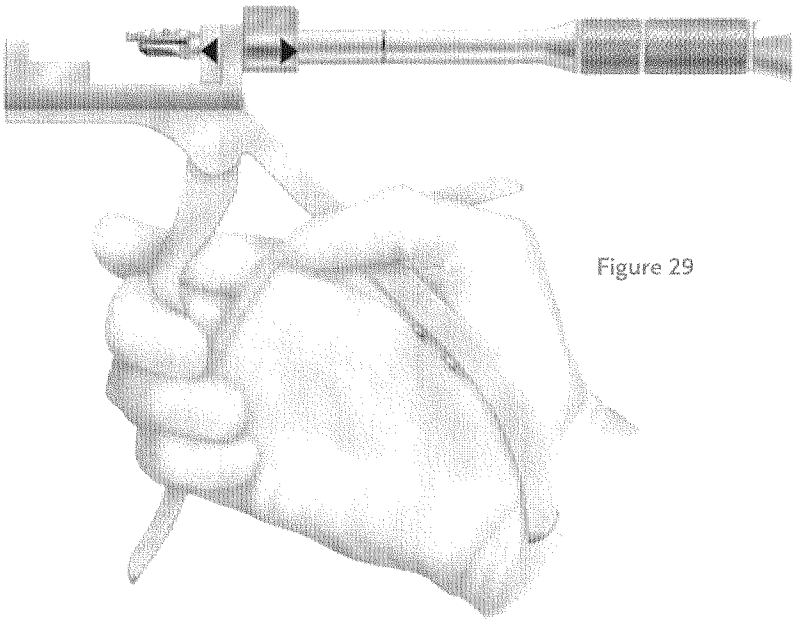

Figure 29

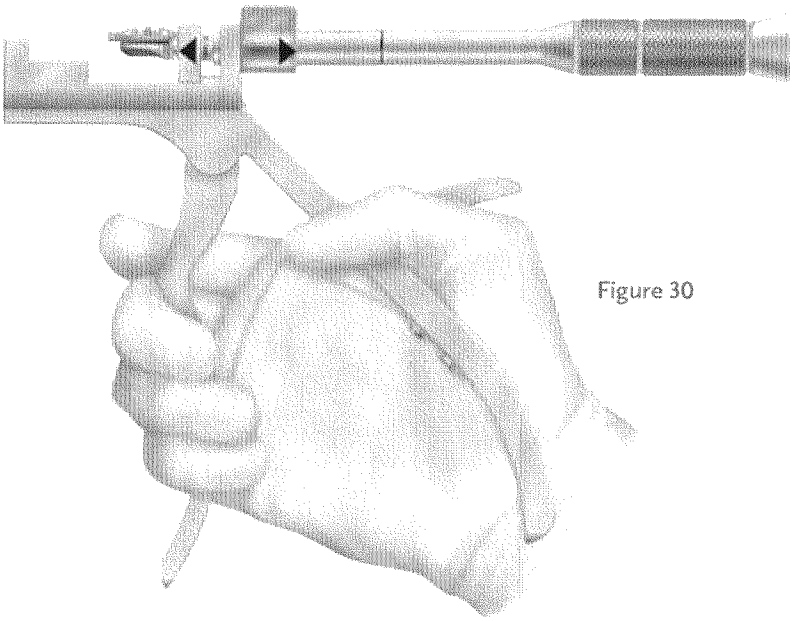

Figure 30

CONFIDENTIAL

Insert the Milling Handpiece into the superior guide slot. **Prior to milling the endplates**, use fluoroscopy to ensure the milling construct is fully seated and the Milling Disc has not surpassed the posterior margin of the vertebral bodies. Activate the drive system and gently pivot the handpiece in a cephalad/caudal direction until engaging the hard stop (*Figure 31*). Irrigate throughout this step using sterile saline. Repeat the process using the inferior guide slot.

After endplate preparation, thoroughly irrigate the disc space to remove any debris. Also verify that a full and complete decompression has been performed. If necessary, gel foam may be applied to the endplates to reduce bleeding prior to implantation.

NOTE *The Stabilizer should be used during the milling process to counter any torque applied to the Distractor and Milling Guides.*

NOTE *Verify the presence of milled cavities on the endplate surfaces of both vertebral bodies.*

NOTE *The Milling Disc is fully seated when the Stabilizer lines up with the laser mark on the Milling Handpiece.*

NOTE *Disposable Milling Assemblies are for single patient use. Discard after the milling step has been completed.*

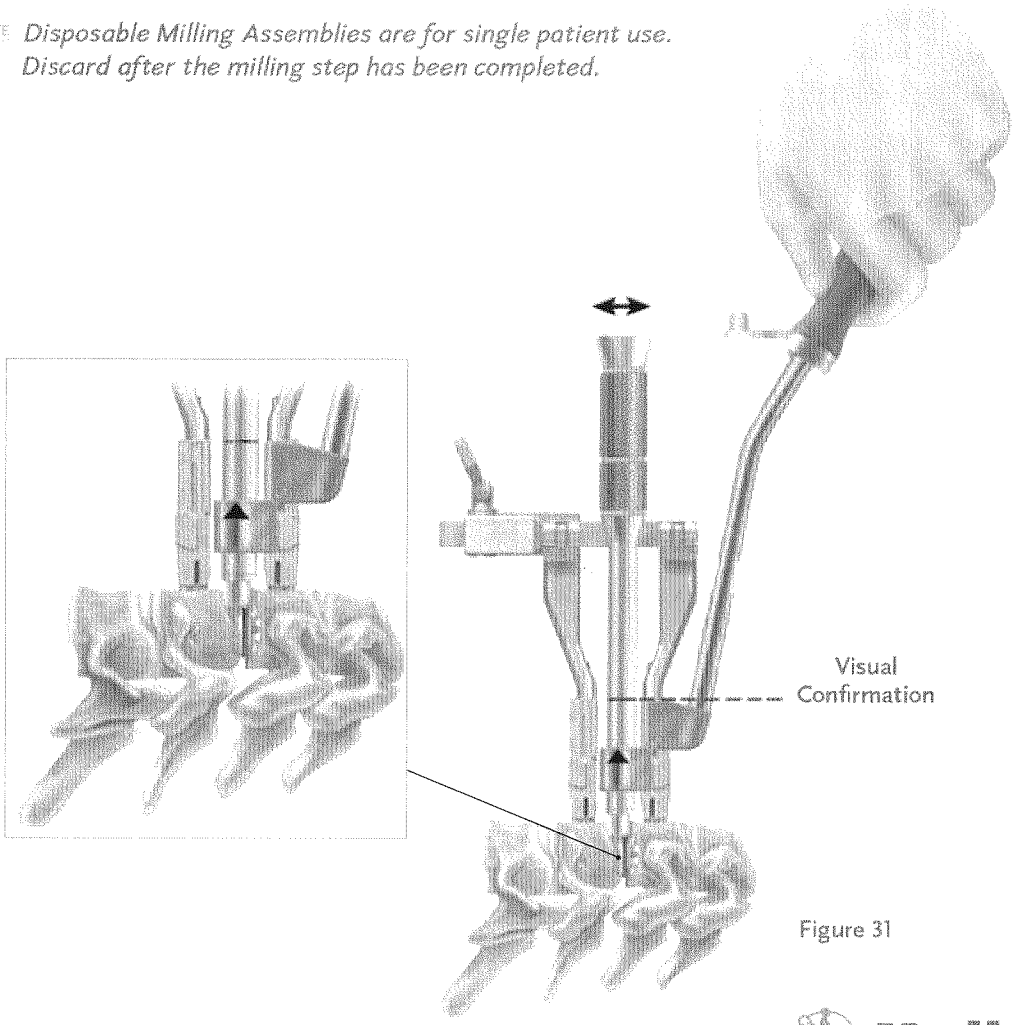

Figure 31

Screw the **Seal Plug** from the prosthesis package into one port of the BRYAN® Cervical Disc prosthesis. Turn the Seal Plug until the handle twists off (*Figure 32*). Care should be taken to thread the Seal Plug into the port and not bend the Seal Plug. Immerse the prosthesis into sterile saline. Without covering the open port, pump the prosthesis several times to allow the sterile saline to fill the device. While the implant is submerged, compress the prosthesis and thread a second Seal Plug into the remaining open port until it twists off, again being careful not to bend the Seal Plug.

Attach the prosthesis to the **Implant Inserter** and insert the prosthesis into the prepared disc space; gently tapping into place with a mallet if necessary (*Figure 33*). If the prosthesis does not fully seat into the prepared disc space, retract the locking arm sleeve on the Implant Inserter and rotate the sleeve 90 degrees. A slight tap on the tool can then be applied to fully seat the prosthesis (*Figure 34*).

Following final disc insertion, lateral and A/P radiographs may be taken to verify proper placement. Complete the surgery using standard anterior cervical disc closure procedures.

NOTE *Put bone wax in the anchor post holes after removing them to control any bleeding.*

NOTE *If explantation of the BRYAN® Cervical Disc is required, separation of the implant from the endplate can be achieved utilizing standard surgical instruments. A small osteotome may be used, along with an angled curette and forceps to separate the fixation surface from the bone.*

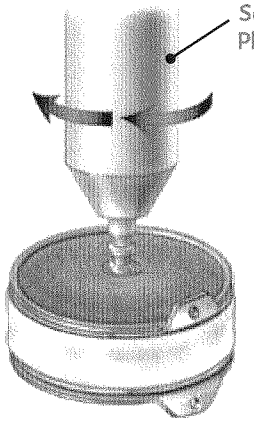

Figure 32

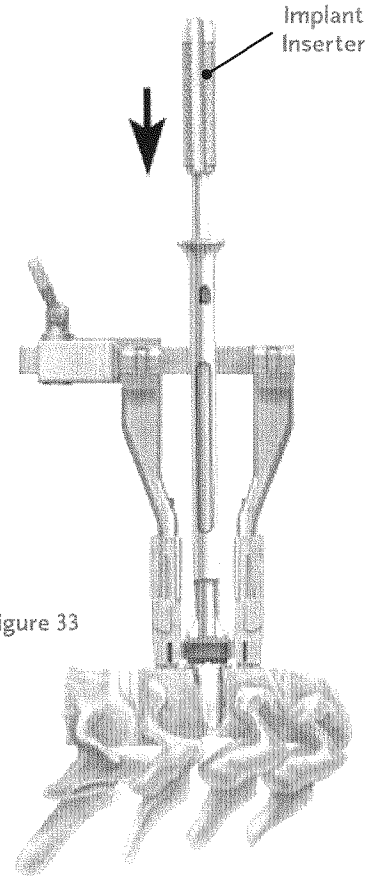

Figure 33

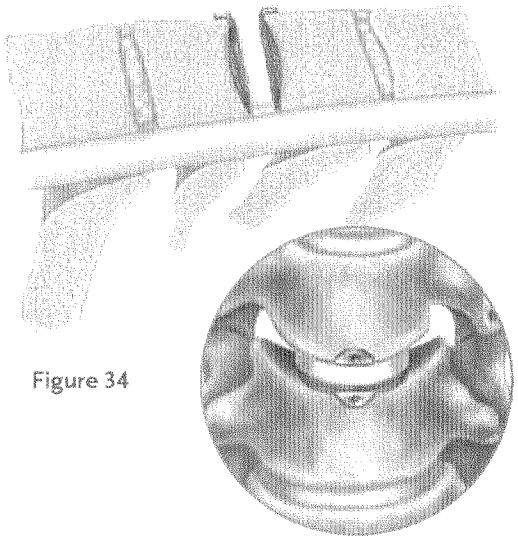

Figure 34

CONFIDENTIAL

ACCEL™ INSTRUMENTATION

Item Number	Description
6471350	Drilling Handpiece
6472015	Drill Bit with Collar*
6478210	Fluted Ball Burr 4.8mm*
6471360	Transverse Centering Tool
6472003	Alignment Guide 3mm
6472004	Alignment Guide 4mm
6472005	Alignment Guide 5mm
6472006	Alignment Guide 6mm
6472007	Alignment Guide 7mm
6472024	Anchor Post 3.5mm × 14mm*
6472026	Anchor Post 3.5mm × 16mm*
6472034	Anchor Post 4.0mm × 14mm*
6472036	Anchor Post 4.0mm × 16mm*
6472061	Mallet
6472010	Milling Guide
6472080	Stabilizer
6472630	Anchor Post Driver
6472045	Intradiscal Distractor
6472040	Distractor
6472050	Depth Gauge
6472054	Dual Headed Sequential Rasp, 14mm
6472055	Dual Headed Sequential Rasp, 15mm
6472056	Dual Headed Sequential Rasp, 16mm
6472057	Dual Headed Sequential Rasp, 17mm
6472058	Dual Headed Sequential Rasp, 18mm
6472511	Milling Handpiece
6472515	Milling Assembly Tool

Item Number	Description
6471610	Implant Inserter
6471351	MIDAS REX® LEGEND® Adapter
6472095	ACCEL™ Outer Case
6472096	ACCEL™ Inner Tray – Lower
6472097	ACCEL™ Outer Lid
6472098	ACCEL™ Inner Tray – Upper

ANCILLARY ITEMS – NOT IN SET	
6470114	14mm BRYAN® Cervical Disc Prosthesis
6470115	15mm BRYAN® Cervical Disc Prosthesis
6470116	16mm BRYAN® Cervical Disc Prosthesis
6470117	17mm BRYAN® Cervical Disc Prosthesis
6470118	18mm BRYAN® Cervical Disc Prosthesis
6472524	Disposable Milling Assembly, 14mm*†
6472525	Disposable Milling Assembly, 15mm*†
6472526	Disposable Milling Assembly, 16mm*†
6472527	Disposable Milling Assembly, 17mm*†
6472528	Disposable Milling Assembly, 18mm*†
6476020	ACCEL™ Template Set
6478600	Pouch Assembly Centering Level*
6471343	MIDAS REX® CLASSIC Adapter
6471344	MIDAS REX® MR III Adapter
6471700	Electric Drive System (115v)**
6471349	Electric Drive System (230v)**
6478831	Electric Drive System Case

* Disposable Items
† Implant specific disposables required with each implant
** Includes: Control Unit, Handheld Motor, Foot Pedal and Power Cord

Medtronic

CONFIDENTIAL

DRIVE SYSTEM OPTIONS

SURGICAL DRIVE SYSTEM

To use the Surgical Drive System, attach the BRYAN® Cervical Disc Handpiece to the handheld motor. The attachment will snap into position when fully seated. Firmly pull the handpiece to remove (*Figure A*).

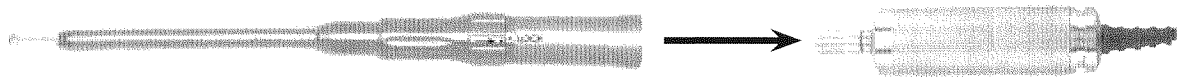

Figure A

MIDAS REX® DRIVE SYSTEMS

To use the **MIDAS REX® LEGEND® Motor**, attach the **MIDAS REX® LEGEND® Adapter** (6471351) to the motor and secure in place. If using the pneumatic system, supply pressure must be set to 80 psi. If using the electric system, reduce the speed to 27,000 RPM. Attach the BRYAN® Cervical Disc Handpiece to the MIDAS REX® LEGEND® Adapter. Pull the handpiece to remove (*Figure B*).

Figure B

To use the **MIDAS REX® III Motor**, screw the **MIDAS REX® III Adapter** (6471344) onto the motor and hand tighten by turning counter-clockwise. Supply pressure should be 80 psi. Attach the BRYAN® Cervical Disc Handpiece to the MIDAS REX® III Adapter. Pull the handpiece to remove (*Figure C*).

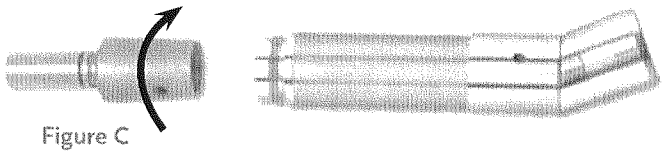

Figure C

To use the **MIDAS REX® Classic Motor**, install the **MIDAS REX® Classic Regulator** between the Universal Foot Control and the Motor Hose. Set the Regulator to 80 psi. Secure the 4-Pin Driver (included with 6471343) to the MIDAS Classic Motor. Tighten the collet nut with the MIDAS Rod and Wrench. Insert the motor into the **MIDAS REX® Adapter** (6471343) and turn counter-clockwise to tighten. Attach the BRYAN® Cervical Disc Handpiece to the MIDAS REX® Adapter. Pull the handpiece to remove (*Figure D*).

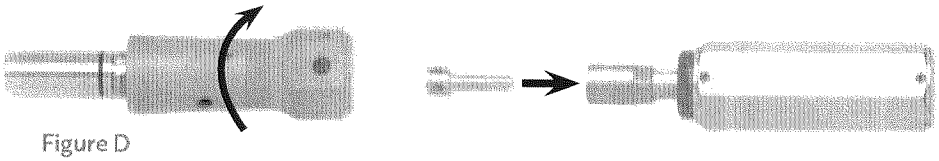

Figure D

CONFIDENTIAL

Package insert will be placed here upon approval

Package insert will be placed here upon approval

CONFIDENTIAL

listen. respond. deliver.

The surgical technique shown is for illustrative purposes only. The technique(s) actually employed in each case will always depend upon the medical judgement of the surgeon exercised before and during surgery as to the best mode of treatment for each patient. Please see the package insert for the complete list of indications, warnings, precautions, and other medical information.

MEDTRONIC
Spinal and Biologics Division
Worldwide Headquarters

2600 Sofamor Danek Drive
Memphis, TN 38132

1800 Pyramid Place
Memphis, TN 38132

(901) 396-3133
(800) 876-3133
Customer Service: (800) 933-2635

www.sofamordanek.com
For more information go to www.myspinetools.com

IRN2581/056
©2006 Medtronic Sofamor Danek USA, Inc.
All Rights Reserved.

CONFIDENTIAL

DRAFT

Medtronic

BRYAN® CERVICAL DISC

Surgical Technique shown with ACCEL™ 5.4 Instrumentation

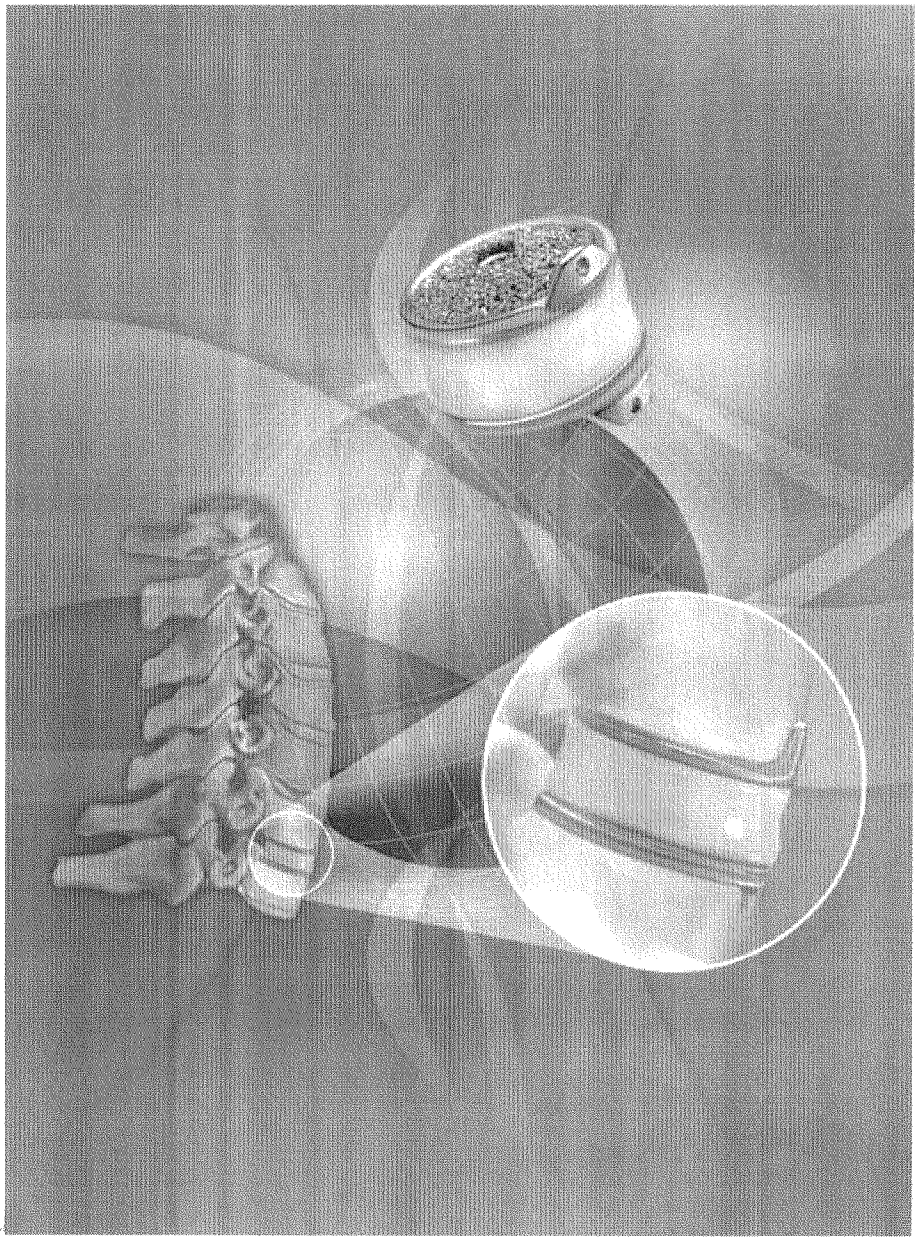

MICHELSON TECHNOLOGY AT WORK

Version A

CONFIDENTIAL

TABLE OF CONTENTS

INTRODUCTION	2
PREOPERATIVE MEASUREMENT	3
PATIENT POSITIONING	4
EXPOSURE	5
DISCECTOMY	6
TRANSVERSE CENTERING	7
ANCHOR POST PLACEMENT	8
DISTRACTION/DECOMPRESSION	11
PROSTHESIS SIZING	12
MILLING	13
IMPLANTATION	14
PRODUCT ORDERING INFORMATION	15
DRIVE SYSTEM OPTIONS	16

CONFIDENTIAL

INTRODUCTION

The surgical benefits of an anterior approach to the cervical spine in the management of the intractable symptoms and signs associated with degenerative disc disease are widely appreciated. Usually, the symptomatic functional spinal unit (FSU) is mobile and mechanically stable preoperatively. Anterior cervical disc fusion, though providing symptomatic relief, has the disadvantage of converting the operated segment to a non-functional spinal unit. As a result, increased stress takes place at adjacent levels, possibly resulting in hypermobility and subsequent mechanical instability and/or accelerated degeneration.

The BRYAN® Cervical Disc Instrument Set couples normal kinematics of the cervical spine with the surgical benefits of an anterior approach to the cervical spine and the symptomatic relief provided by decompression. Further, the BRYAN® Cervical Disc leverages significant clinical experience dating back to 2000.

In an effort to facilitate accurate and reproducible implantation of a BRYAN® Cervical Disc, this technique features surgical notes and pearls that will serve as valuable points of information. Surgical notes refer to various surgical steps that require emphasis throughout the procedure. Notes should be consistently incorporated into the surgical approach.

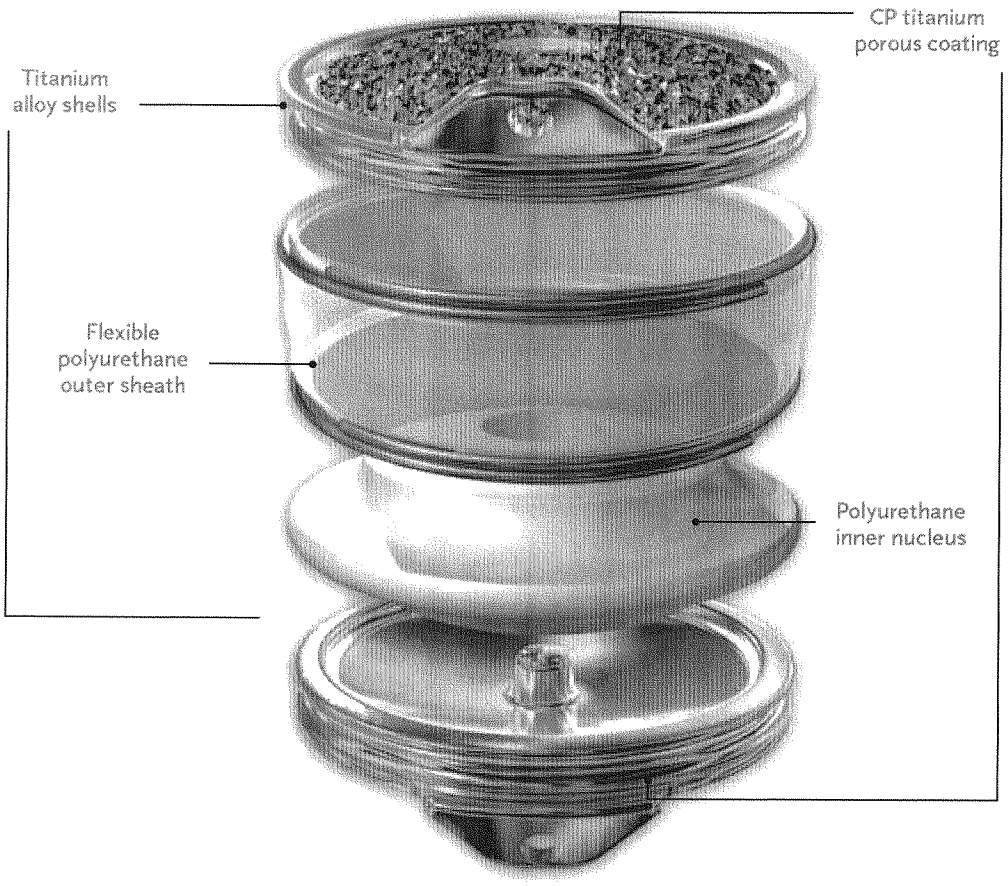

CONFIDENTIAL

PREOPERATIVE MEASUREMENT

STEP 1

Using a computed tomography (CT) or magnetic resonance image (MRI) obtained so that the slices are parallel to the vertebral body endplates, determine the smaller of the two vertebral body endplates at the target disc space. The use of a CT image is preferred. Do not include spurs or ridges that will be removed in the subsequent burring process. Determine the magnification factor of the image using the **BRYAN® Cervical Disc Template Set (Figure 1a, 1b)**. Choose the prosthesis template corresponding to the measured magnification factor, and follow the instructions on the template to estimate the prosthesis size.

Note: *Templating provides only approximate sizing, and this initial assessment may vary due to magnification factors inherent in the CT or MRI images. Exact device sizing is determined during the prosthesis sizing step.*

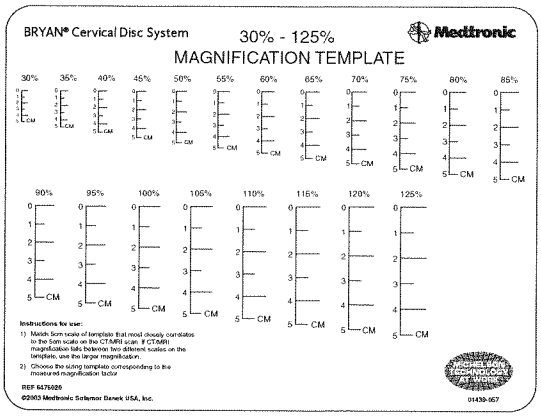

Figure 1a

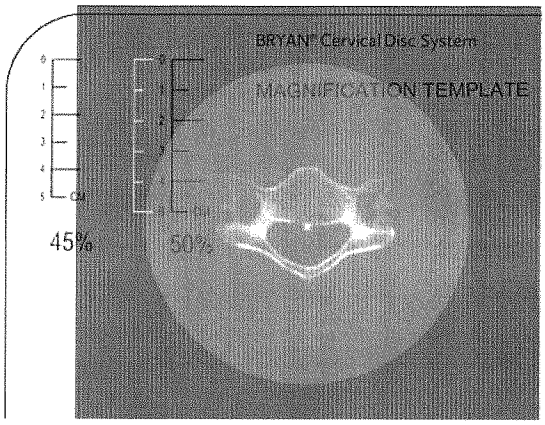

Figure 1b

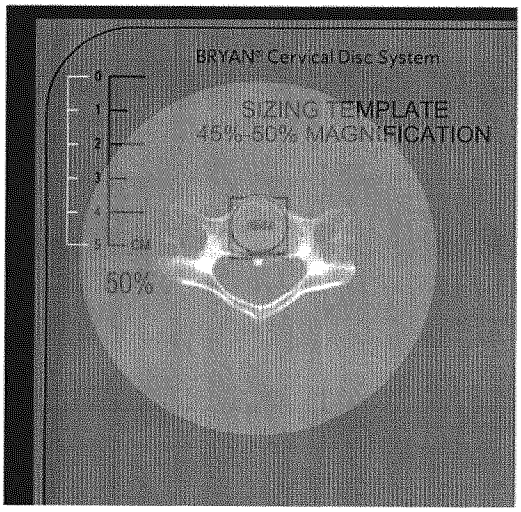

Figure 1c

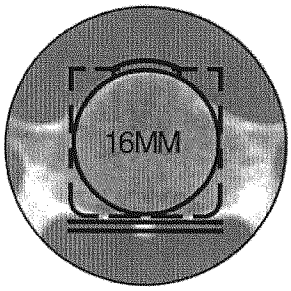

PATIENT POSITIONING

STEP 2

The patient is placed in the supine position with the head and neck in a **neutral position (Figure 2)**. The posterior cervical spine should be supported to establish and maintain this position. A standard right-sided or left-sided approach to the cervical vertebral column may be used.

Note: *Neck position should mirror the pre-operative standing neutral lateral x-rays and remain fixed throughout the procedure. Failure to reproduce pre-operative neutral neck position may result in improper implant position or sagittal balance of the cervical spine at the operative level.*

Note: *Both shoulders should be pulled down and secured for better visualization of the lower cervical spine on fluoroscopy if necessary. It will be necessary to perform a fusion procedure if visualization of the target disc space does not allow for an optimal lateral view.*

Note: *Use standard methods to identify the correct disc level.*

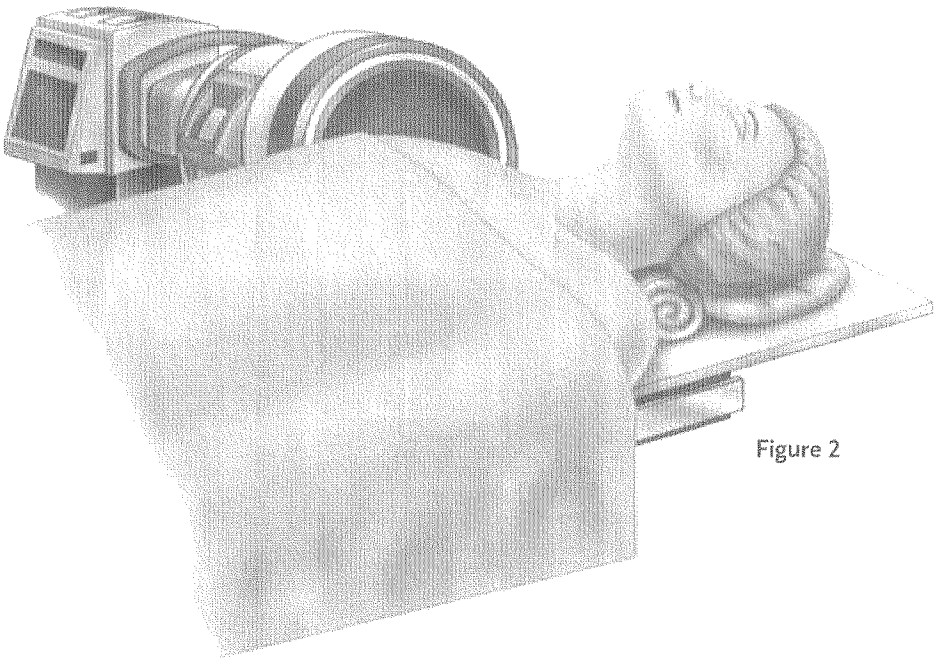

Figure 2

STEP 3

Typically, a transverse skin incision is made. An avascular dissection plane is developed between the trachea and the esophagus medially, and the carotid sheath laterally. Hand-held retractors are utilized to provide exposure of the anterior vertebral column and the adjacent longus colli muscles **(Figure 3)**.

After the anterior vertebral column has been exposed, the longus colli muscles are elevated and the medial/lateral self-retaining retractor blades are positioned beneath them.

Note: *The presence of anatomical abnormalities and/or deformities may reduce the surgeon's ability to ensure proper placement of the instrumentation and/or prosthesis. Under such circumstances, it may be necessary to perform a fusion procedure.*

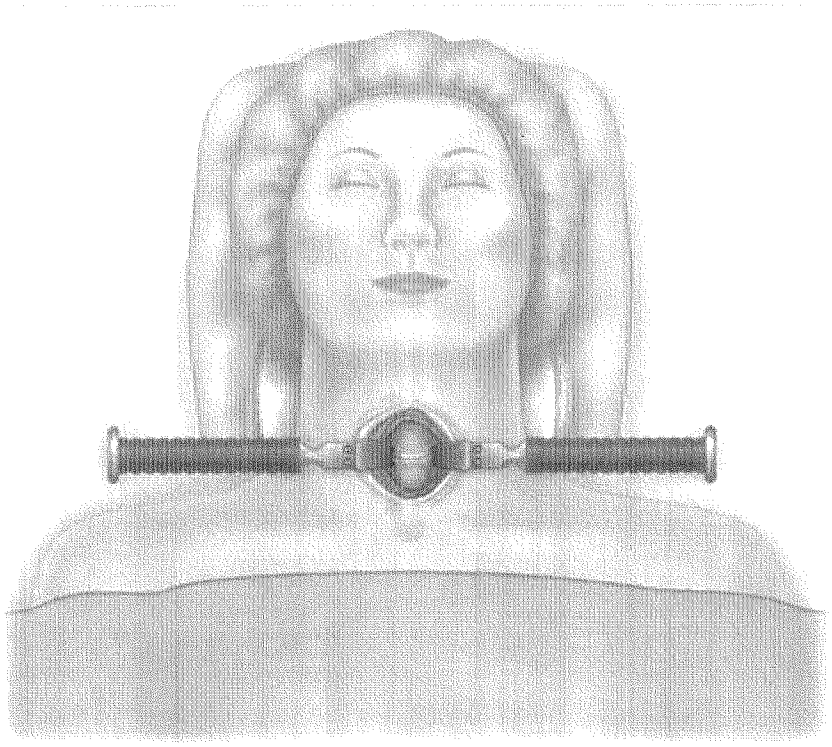

Figure 3

DISCECTOMY

STEP 4

A standard anterior cervical discectomy is completed at the indicated level **(Figure 4)**. Pituitaries, curettes and kerrisons may be used to remove the disc material and endplate cartilage. Expose the bi-lateral uncinate processes as well as the posterior longitudinal ligament.

Note: *Do not remove any part of the uncinate processes as they will serve as reference points for locating the center of the disc space.*

Lightly burr the anterior surfaces of the vertebral bodies to remove any soft tissue and bony protrusions to create a flat surface (**Figure 5**). Remove the anterior lip of bone on the cephalad vertebral body (**Figure 6**).

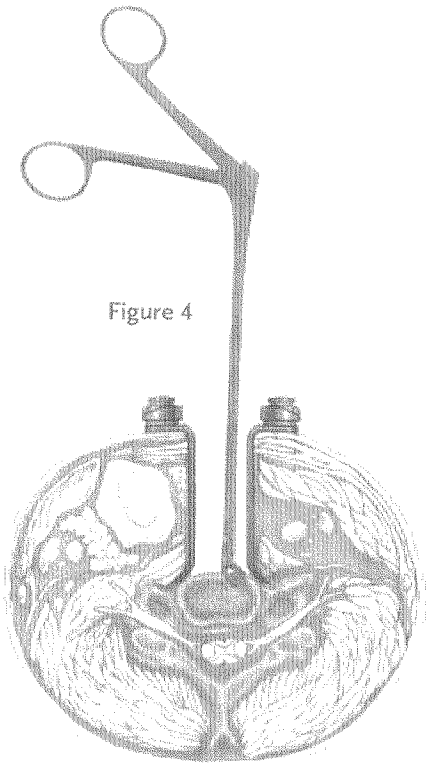

Figure 4

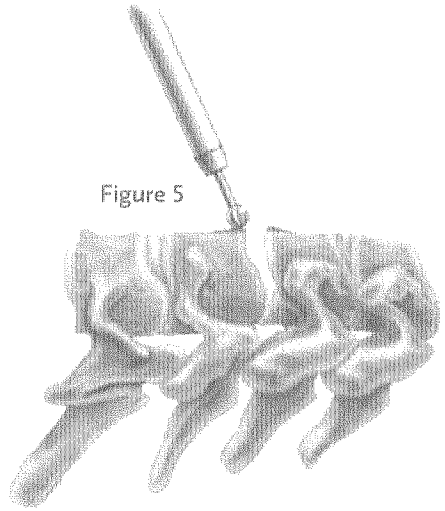

Figure 5

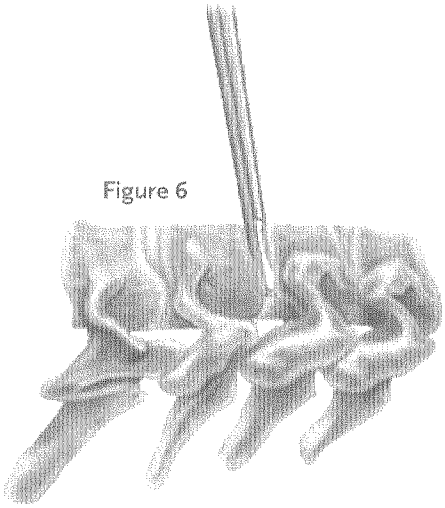

Figure 6

STEP 5

Place a **Bubble Level** on the **Transverse Centering Tool** and insert into the target disc space **(Figure 7a)**. Expand the tips of the tool until contacting the lateral soft margins **(Figure 7b)**. When the bubble is centered in the lateral direction **(Figure 8)**, mark the center point of the superior vertebral body by advancing the sliding pointer.

Note: *If the midline position is still in question, an AP radiograph should be used to confirm midline position.*

Note: *When using the Centering Level to position the Transverse Centering Tool, the bubble must be centered only in the transverse plane.*

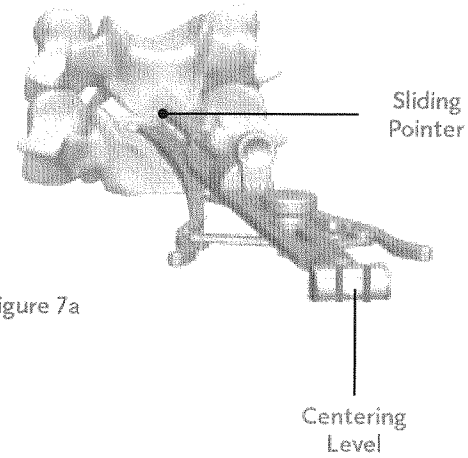

Figure 7a

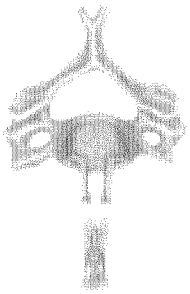

Figure 7b

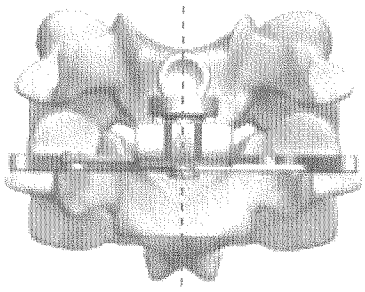

Figure 8

ANCHOR POST PLACEMENT

STEP 6

Select the **Alignment Guide** that most closely matches the neutral disc space height and attach it to the **Inferior Milling Guide (Figure 9a & 9b)**. Place the construct in the target disc space **(Figure 10)**.

Note: *The construct should be relatively stable in the disc space with no vertebral distraction. The goal is not to distract the vertebral bodies.*

Note: *If none of the Alignment Guides are relatively stable in the disc space, an alternative treatment option should be considered.*

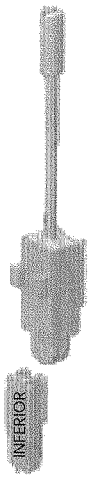

Figure 9a

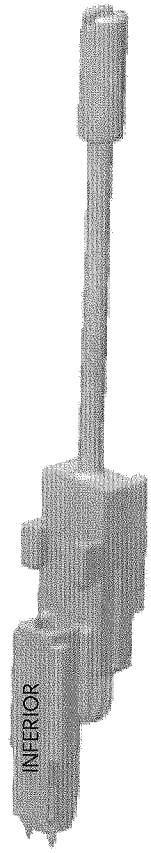

Figure 9b

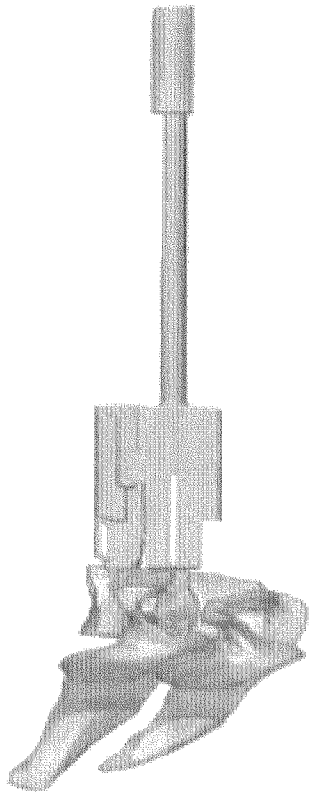

Figure 10

ANCHOR POST PLACEMENT (CONTINUED)

STEP 6

Place the **Bubble Level** on the **Alignment Guide** construct and use as a visual aid to center the assembly in the lateral direction.

Using lateral fluoroscopy, verify that the Alignment Visualization Slots are parallel to the endplates and centered in the disc space **(Figure 11)**.

Insert an **Anchor Post** into the **Anchor Post Driver** and drive the **Anchor Post** through the **Inferior Milling Guide** until fully seated **(Figure 12a & 12b)**.

Note: *Attach the Anti-Torque Handle to the Alignment Guide to stabilize the construct while driving the Anchor Posts.*

Note: *Anchor Posts are available in 14mm or 16m lengths and 3.5mm or 4.0mm diameter. The 4.0mm Anchor Posts can be used if the 3.5mm Anchor Post becomes unstable.*

Note: *Select the longest possible anchor post ensuring that its length does not exceed the diameter of the selected prosthesis.*

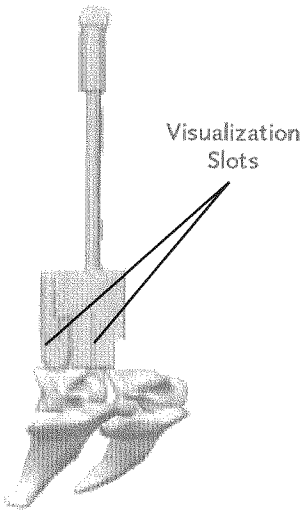

Figure 11

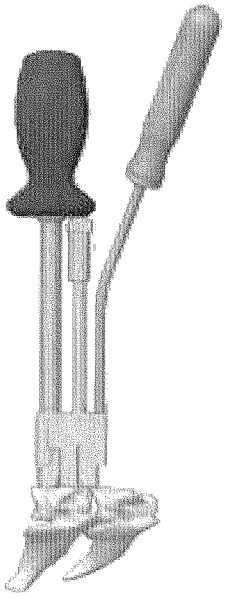

Figure 12a

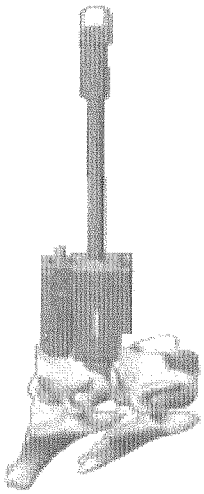

Figure 12b

ANCHOR POST PLACEMENT (CONTINUED)

STEP 6

Select the **Superior Milling Guide (Figure 13a & 13b)** that is closest to sitting flush with the top of the **Alignment Guide** when attached **(Figures 14a, 14b, & 14c)**.

After choosing a **Superior Milling Guide**, insert the appropriate **Anchor Post** into the **Anchor Post Driver** and drive the Anchor Post through the **Superior Milling Guide** until fully seated.

Note: *If none of the Superior Milling Guides align flush with the top of the alignment guide, select the closest one that does not exceed the top of the alignment guide.*

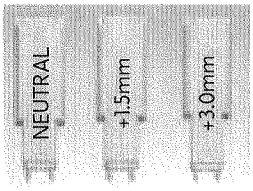

Figure 13a

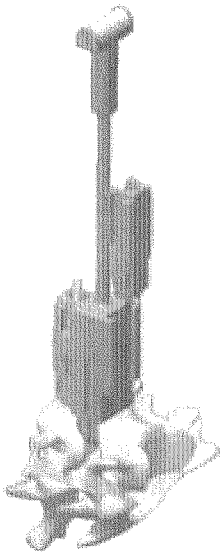

Figure 13b

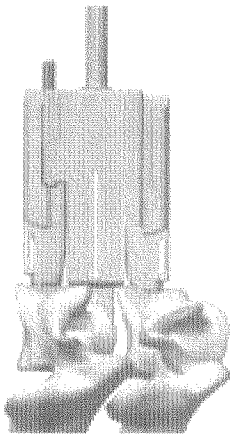

Figure 14a

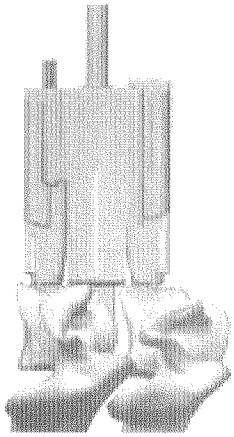

Figure 14b

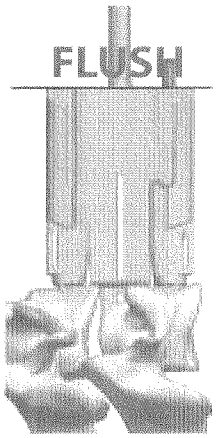

Figure 14c

STEP 7

Attach the **Distractor** to the **Anchor Posts (Figure 15)**.

Secure the **Distractor** to the **Anchor Posts** using the **Anchor Post Caps (Figures 16a & 16b)** and remove the **Alignment Guide (Figure 17)**.

Insert the **Intradiscal Distractor** and carefully distract the disc space **(Figure 18)**. Distraction should be performed using the **Intradiscal Distractor** in order to preserve the integrity of the screw-bone interface. Perform a thorough and complete decompression.

Note: *Since the BRYAN® Disc prosthesis is a motion sparing device, a thorough bi-lateral decompression must be performed.*

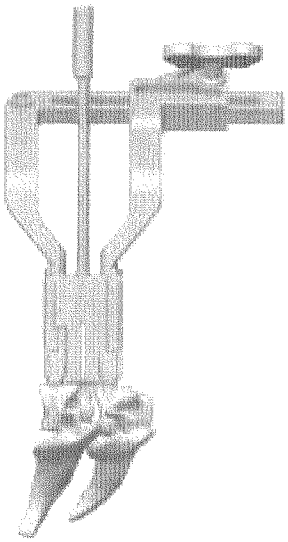

Figure 15

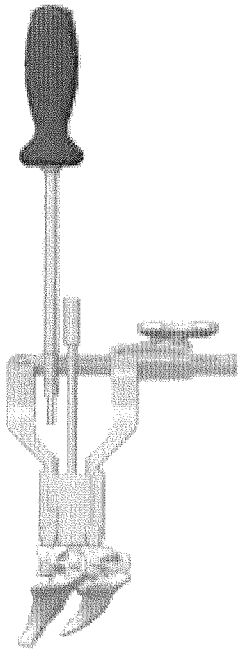

Figure 16a

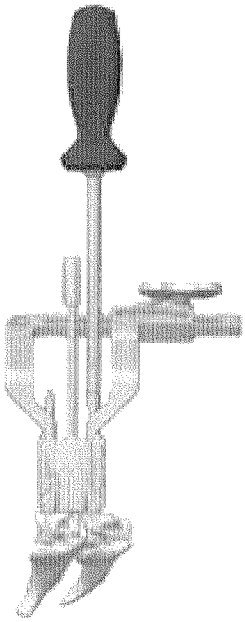

Figure 16b

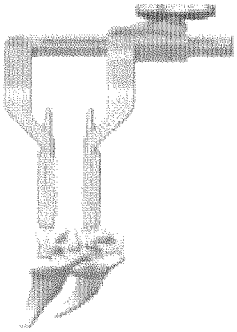

Figure 17

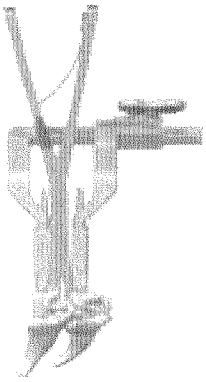

Figure 18

PROSTHESIS SIZING

STEP 8

Slide the **Depth Trial (Figure 19)** into the guide slot of the **Superior Milling Guide (Figure 20)**. Make sure the **Depth Trial** is fully seated and assess the posterior margin **(Figure 21)**. Repeat the process using the **Inferior Milling Guide**. Choose the smaller of the two endplate sizes as indicated by the **Depth Trials**.

Note: *Verify Depth Trial position using lateral fluoroscopy*

Note: *If the size indicated on the sizing scale falls between two sizes, choose the smaller size.*

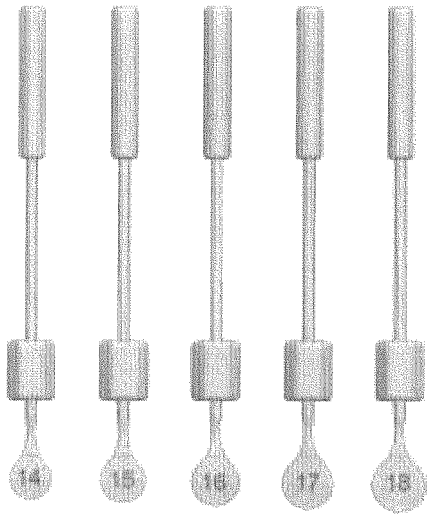

Figure 19

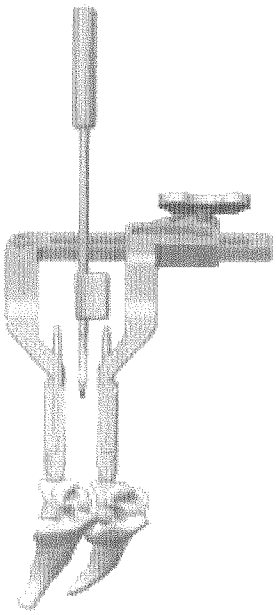

Figure 20

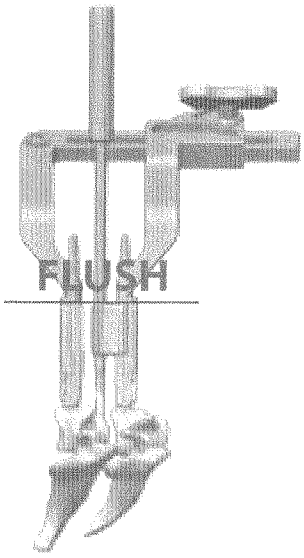

Figure 21

STEP 9

Attach the **Disposable Milling Assembly** to the **Milling Handpiece** and connect it to the drive system. Insert the **Milling Handpiece** into either the inferior or superior **Milling Guide** slot **(Figure 22)**. Prior to milling the endplates, use fluoroscopy to ensure the milling construct is fully seated and the Milling Disc has not surpassed the posterior margin of the vertebral bodies. Activate the drive system and gently pivot the **Milling Handpiece** back and forth until engaging the hard stop. Irrigate throughout using sterile saline.

After endplate preparation, thoroughly irrigate the disc space to remove any debris. Also verify that a complete bi-lateral decompression has been performed. If necessary, gel foam may be applied to the endplates to reduce bleeding prior to implantation.

Note: *Verify the presence of milled cavities on the endplate surfaces of both vertebral bodies.*

Note: *The Hudson Adapter may be attached to the Milling Handpiece for use with the optional power source (Figure 23a & 23b).*

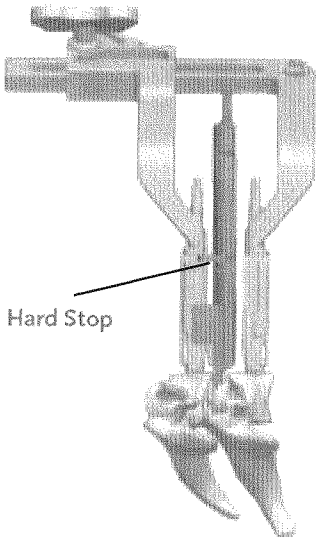

Figure 22

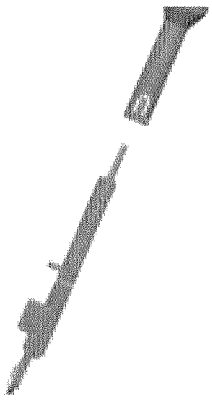

Figure 23a

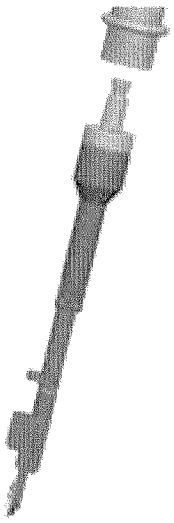

Figure 23b

IMPLANTATION

STEP 10

Screw a **Seal Plug** from the prosthesis package into one port of the BRYAN® Cervical Disc prosthesis. Turn the Seal Plug until the handle twists off **(Figure 24)**. Care should be taken to not bend the Seal Plug. Immerse the prosthesis into sterile saline. Without covering the open port, pump the prosthesis several times to allow the sterile saline to fill the device. While the implant is submerged, compress the prosthesis and thread a second Seal Plug into the remaining open port.

Attach the prosthesis to the **Implant Inserter** and insert the prosthesis into the prepared disc space; gently tapping into place with a mallet if necessary **(Figure 25)**. If the prosthesis does not fully seat into the prepared disc space, retract the locking arm sleeve on the Implant Inserter and rotate the sleeve 90 degrees. A slight tap on the tool can then be applied to fully seat the prosthesis. If one shell flange is slightly above the anterior surface of the vertebral body, do not push it further down. This condition is acceptable **(Figure 26)**.

Following final disc insertion, lateral and A/P radiographs may be taken to verify proper placement. Complete the surgery using standard anterior cervical disc closure procedures.

Note: *Be sure to put bone wax in the anchor post holes after removing them.*

Note: *If explantation of the BRYAN® Cervical Disc is required, separation of the implant from the endplate can be achieved utilizing standard surgical instruments. A small osteotome may be used, along with an angled curette and forceps to separate the fixation surface from the bone.*

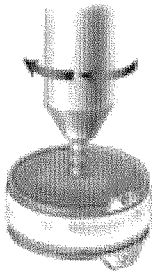

Figure 24

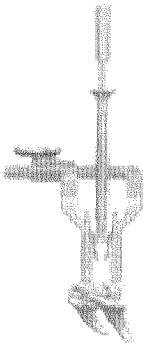

Figure 25

Figure 26

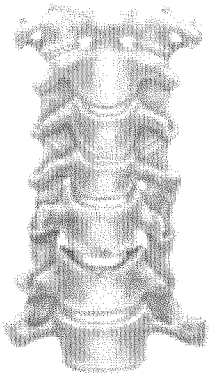

PRODUCT ORDERING INFORMATION

Number	Description
6470314	BRYAN® 14mm Cervical Disc
6470315	BRYAN® 15mm Cervical Disc
6470316	BRYAN® 16mm Cervical Disc
6470317	BRYAN® 17mm Cervical Disc
6470318	BRYAN® 18mm Cervical Disc
6478300	BRYAN® Cervical System Suitcase
6473002	Transverse Centering Tool
6473004	Alignment Guide 4mm
6473005	Alignment Guide 5mm
6473006	Alignment Guide 6mm
6473007	Alignment Guide 7mm
6473024	Anchor Post 3.5mm ∞ 14mm
6473034	Anchor Post 4.0mm ∞ 14mm
6473026	Anchor Post 3.5mm ∞ 16mm
6473036	Anchor Post 4.0mm ∞ 16mm
6473037	Anchor Post Caps
6473009	Milling Guide – Inferior
6473010	Milling Guide – +0.75mm
6473012	Milling Guide – Neutral
6473013	Milling Guide – +2.25mm
6473015	Milling Guide – +1.5mm
6473030	Milling Guide – +3.0mm
6473630	Anchor Post Driver
6473045	Intradiscal Distractor

Number	Description
6473040	Distractor
6473042	Anti-Torque Handle
6473054	Lollipop Trial Sizer, 14mm
6473055	Lollipop Trial Sizer, 15mm
6473056	Lollipop Trial Sizer, 16mm
6473057	Lollipop Trial Sizer, 17mm
6473058	Lollipop Trial Sizer, 18mm
6473511	Milling Handpiece
6473610	Implant Inserter
6473351	Hudson Adapter
6473515	Table Mounted Retractor
6473001	Bubble Level
6473517	Perforator Shield
6473095	ACCEL™ 5.4 Outer Case
6473096	ACCEL™ 5.4 Inner Tray – Lower
6473097	ACCEL™ 5.4 Outer Lid
6473098	ACCEL™ 5.4 Inner Tray – Upper
6473524	Disposable Cutter, 14mm
6473525	Disposable Cutter, 15mm
6473526	Disposable Cutter, 16mm
6473527	Disposable Cutter, 17mm
6473528	Disposable Cutter, 18mm
6473523	Disposable Power Source
MLITBCDTMP7	BRYAN® Template Set

CONFIDENTIAL

DRIVE SYSTEM OPTIONS

Item number 6473523, **Disposable Power Source**, may be used with the **Milling Handpiece** to complete the milling process.

As the optional power source item number AD01, **Midas Rex Perforater Driver**, may be used with the **Milling Handpiece** with the **Hudson Adapter** attached.

CONFIDENTIAL

listen. respond. deliver.

The surgical technique shown is for illustrative purposes only. The technique(s) actually employed in each case will always depend upon the medical judgement of the surgeon exercised before and during surgery as to the best mode of treatment for each patient. Please see the package insert for the complete list of indications, warnings, precautions, and other medical information.

MEDTRONIC
Spinal and Biologics Business
Worldwide Headquarters

2600 Sofamor Danek Drive
Memphis, TN 38132

1800 Pyramid Place
Memphis, TN 38132

(901) 396-3133
(800) 876-3133
Customer Service: (800) 933-2635

www.sofamordanek.com
For more information go to www.myspinetools.com

IRN4684/027
©2007 Medtronic Sofamor Danek USA, Inc.
All Rights Reserved.

CONFIDENTIAL