COSOPT®
(dorzolamide hydrochloride-timolol maleate ophthalmic solution)
Sterile Ophthalmic Solution

DESCRIPTION

COSOPT* (dorzolamide hydrochloride-timolol maleate ophthalmic solution) is the combination of a topical carbonic anhydrase inhibitor and a topical beta-adrenergic receptor blocking agent.

Dorzolamide hydrochloride is described chemically as: (4*S*-*trans*)-4-(ethylamino)-5,6-dihydro-6-methyl-4*H*-thieno[2,3-*b*]thiopyran-2-sulfonamide 7,7-dioxide monohydrochloride. Dorzolamide hydrochloride is optically active. The specific rotation is:

$[\alpha]^{25°C}_{405\,nm}$ (C=1, water) = ~ -17°.

Its empirical formula is $C_{10}H_{16}N_2O_4S_3$•HCl and its structural formula is:

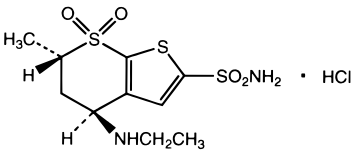

Dorzolamide hydrochloride has a molecular weight of 360.91. It is a white to off-white, crystalline powder, which is soluble in water and slightly soluble in methanol and ethanol.

Timolol maleate is described chemically as: (-)-1-(*tert*-butylamino)-3-[(4-morpholino-1,2,5-thiadiazol-3-yl)oxy]-2-propanol maleate (1:1) (salt). Timolol maleate possesses an asymmetric carbon atom in its structure and is provided as the levo-isomer. The optical rotation of timolol maleate is:

$[\alpha]^{25°C}_{405\,nm}$ in 1N HCl (C = 5) = -12.2° (-11.7° to -12.5°).

Its molecular formula is $C_{13}H_{24}N_4O_3S$•$C_4H_4O_4$ and its structural formula is:

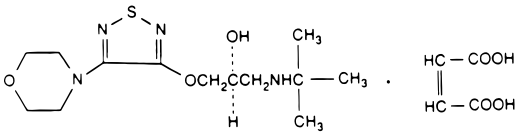

Timolol maleate has a molecular weight of 432.50. It is a white, odorless, crystalline powder which is soluble in water, methanol, and alcohol. Timolol maleate is stable at room temperature.

COSOPT is supplied as a sterile, isotonic, buffered, slightly viscous, aqueous solution. The pH of the solution is approximately 5.65, and the osmolarity is 242-323 mOsM. Each mL of COSOPT contains 20 mg dorzolamide (22.26 mg of dorzolamide hydrochloride) and 5 mg timolol (6.83 mg timolol maleate). Inactive ingredients are sodium citrate, hydroxyethyl cellulose, sodium hydroxide, mannitol, and water for injection. Benzalkonium chloride 0.0075% is added as a preservative.

---

* Registered trademark of MERCK & CO., Inc.
COPYRIGHT © 1998, 2004, 2005 MERCK & CO., Inc.
All rights reserved

CLINICAL PHARMACOLOGY

Mechanism of Action

COSOPT is comprised of two components: dorzolamide hydrochloride and timolol maleate. Each of these two components decreases elevated intraocular pressure, whether or not associated with glaucoma, by reducing aqueous humor secretion. Elevated intraocular pressure is a major risk factor in the pathogenesis of optic nerve damage and glaucomatous visual field loss. The higher the level of intraocular pressure, the greater the likelihood of glaucomatous field loss and optic nerve damage.

Dorzolamide hydrochloride is an inhibitor of human carbonic anhydrase II. Inhibition of carbonic anhydrase in the ciliary processes of the eye decreases aqueous humor secretion, presumably by slowing the formation of bicarbonate ions with subsequent reduction in sodium and fluid transport. Timolol maleate is a $beta_1$ and $beta_2$ (non-selective) adrenergic receptor blocking agent that does not have significant intrinsic sympathomimetic, direct myocardial depressant, or local anesthetic (membrane-stabilizing) activity. The combined effect of these two agents administered as COSOPT b.i.d. results in additional intraocular pressure reduction compared to either component administered alone, but the reduction is not as much as when dorzolamide t.i.d. and timolol b.i.d. are administered concomitantly (see *Clinical Studies*).

Pharmacokinetics/Pharmacodynamics

Dorzolamide Hydrochloride

When topically applied, dorzolamide reaches the systemic circulation. To assess the potential for systemic carbonic anhydrase inhibition following topical administration, drug and metabolite concentrations in RBCs and plasma and carbonic anhydrase inhibition in RBCs were measured. Dorzolamide accumulates in RBCs during chronic dosing as a result of binding to CA-II. The parent drug forms a single N-desethyl metabolite, which inhibits CA-II less potently than the parent drug but also inhibits CA-I. The metabolite also accumulates in RBCs where it binds primarily to CA-I. Plasma concentrations of dorzolamide and metabolite are generally below the assay limit of quantitation (15nM). Dorzolamide binds moderately to plasma proteins (approximately 33%).

Dorzolamide is primarily excreted unchanged in the urine; the metabolite also is excreted in urine. After dosing is stopped, dorzolamide washes out of RBCs nonlinearly, resulting in a rapid decline of drug concentration initially, followed by a slower elimination phase with a half-life of about four months.

To simulate the systemic exposure after long-term topical ocular administration, dorzolamide was given orally to eight healthy subjects for up to 20 weeks. The oral dose of 2 mg b.i.d. closely approximates the amount of drug delivered by topical ocular administration of dorzolamide 2% t.i.d. Steady state was reached within 8 weeks. The inhibition of CA-II and total carbonic anhydrase activities was below the degree of inhibition anticipated to be necessary for a pharmacological effect on renal function and respiration in healthy individuals.

Timolol Maleate

In a study of plasma drug concentrations in six subjects, the systemic exposure to timolol was determined following twice daily topical administration of timolol maleate ophthalmic solution 0.5%. The mean peak plasma concentration following morning dosing was 0.46 ng/mL.

Clinical Studies

Clinical studies of 3 to 15 months duration were conducted to compare the IOP-lowering effect over the course of the day of COSOPT b.i.d. (dosed morning and bedtime) to individually- and concomitantly-administered 0.5% timolol (b.i.d.) and 2.0% dorzolamide (b.i.d. and t.i.d.). The IOP-lowering effect of COSOPT b.i.d. was greater (1-3 mmHg) than that of monotherapy with either 2.0% dorzolamide t.i.d. or 0.5% timolol b.i.d. The IOP-lowering effect of COSOPT b.i.d. was approximately 1 mmHg less than that of concomitant therapy with 2.0% dorzolamide t.i.d. and 0.5% timolol b.i.d.

Open-label extensions of two studies were conducted for up to 12 months. During this period, the IOP-lowering effect of COSOPT b.i.d. was consistent during the 12 month follow-up period.

INDICATIONS AND USAGE

COSOPT is indicated for the reduction of elevated intraocular pressure in patients with open-angle glaucoma or ocular hypertension who are insufficiently responsive to beta-blockers (failed to achieve target IOP determined after multiple measurements over time). The IOP-lowering of COSOPT b.i.d. was slightly less than that seen with the concomitant administration of 0.5% timolol b.i.d. and 2.0% dorzolamide t.i.d. (see CLINICAL PHARMACOLOGY, *Clinical Studies*).

CONTRAINDICATIONS

COSOPT is contraindicated in patients with (1) bronchial asthma; (2) a history of bronchial asthma; (3) severe chronic obstructive pulmonary disease (see WARNINGS); (4) sinus bradycardia; (5) second or third degree atrioventricular block; (6) overt cardiac failure (see WARNINGS); (7) cardiogenic shock; or (8) hypersensitivity to any component of this product.

WARNINGS

Systemic Exposure

COSOPT contains dorzolamide, a sulfonamide, and timolol maleate, a beta-adrenergic blocking agent; and although administered topically, is absorbed systemically. Therefore, the same types of adverse reactions that are attributable to sulfonamides and/or systemic administration of beta-adrenergic blocking agents may occur with topical administration. For example, severe respiratory reactions and cardiac reactions, including death due to bronchospasm in patients with asthma, and rarely death in association with cardiac failure, have been reported following systemic or ophthalmic administration of timolol maleate (see CONTRAINDICATIONS). Fatalities have occurred, although rarely, due to severe reactions to sulfonamides including Stevens-Johnson syndrome, toxic epidermal necrolysis, fulminant hepatic necrosis, agranulocytosis, aplastic anemia, and other blood dyscrasias. Sensitization may recur when a sulfonamide is readministered irrespective of the route of administration. If signs of serious reactions or hypersensitivity occur, discontinue the use of this preparation.

Cardiac Failure

Sympathetic stimulation may be essential for support of the circulation in individuals with diminished myocardial contractility, and its inhibition by beta-adrenergic receptor blockade may precipitate more severe failure.

In Patients Without a History of Cardiac Failure continued depression of the myocardium with beta-blocking agents over a period of time can, in some cases, lead to cardiac failure. At the first sign or symptom of cardiac failure, COSOPT should be discontinued.

Obstructive Pulmonary Disease

Patients with chronic obstructive pulmonary disease (e.g., chronic bronchitis, emphysema) of mild or moderate severity, bronchospastic disease, or a history of bronchospastic disease (other than bronchial asthma or a history of bronchial asthma, in which COSOPT is contraindicated [see CONTRAINDICATIONS]) should, in general, not receive beta-blocking agents, including COSOPT.

Major Surgery

The necessity or desirability of withdrawal of beta-adrenergic blocking agents prior to major surgery is controversial. Beta-adrenergic receptor blockade impairs the ability of the heart to respond to beta-adrenergically mediated reflex stimuli. This may augment the risk of general anesthesia in surgical procedures. Some patients receiving beta-adrenergic receptor blocking agents have experienced protracted severe hypotension during anesthesia. Difficulty in restarting and maintaining the heartbeat has also been reported. For these reasons, in patients undergoing elective surgery, some authorities recommend gradual withdrawal of beta-adrenergic receptor blocking agents.

If necessary during surgery, the effects of beta-adrenergic blocking agents may be reversed by sufficient doses of adrenergic agonists.

Diabetes Mellitus

Beta-adrenergic blocking agents should be administered with caution in patients subject to spontaneous hypoglycemia or to diabetic patients (especially those with labile diabetes) who are

receiving insulin or oral hypoglycemic agents. Beta-adrenergic receptor blocking agents may mask the signs and symptoms of acute hypoglycemia.

Thyrotoxicosis

Beta-adrenergic blocking agents may mask certain clinical signs (e.g., tachycardia) of hyperthyroidism. Patients suspected of developing thyrotoxicosis should be managed carefully to avoid abrupt withdrawal of beta-adrenergic blocking agents that might precipitate a thyroid storm.

PRECAUTIONS

General

Dorzolamide has not been studied in patients with severe renal impairment (CrCl <30 mL/min). Because dorzolamide and its metabolite are excreted predominantly by the kidney, COSOPT is not recommended in such patients.

Dorzolamide has not been studied in patients with hepatic impairment and should therefore be used with caution in such patients.

While taking beta-blockers, patients with a history of atopy or a history of severe anaphylactic reactions to a variety of allergens may be more reactive to repeated accidental, diagnostic, or therapeutic challenge with such allergens. Such patients may be unresponsive to the usual doses of epinephrine used to treat anaphylactic reactions.

In clinical studies, local ocular adverse effects, primarily conjunctivitis and lid reactions, were reported with chronic administration of COSOPT. Many of these reactions had the clinical appearance and course of an allergic-type reaction that resolved upon discontinuation of drug therapy. If such reactions are observed, COSOPT should be discontinued and the patient evaluated before considering restarting the drug. (See ADVERSE REACTIONS.)

The management of patients with acute angle-closure glaucoma requires therapeutic interventions in addition to ocular hypotensive agents. COSOPT has not been studied in patients with acute angle-closure glaucoma.

Choroidal detachment after filtration procedures has been reported with the administration of aqueous suppressant therapy (e.g., timolol).

Beta-adrenergic blockade has been reported to potentiate muscle weakness consistent with certain myasthenic symptoms (e.g., diplopia, ptosis, and generalized weakness). Timolol has been reported rarely to increase muscle weakness in some patients with myasthenia gravis or myasthenic symptoms.

There have been reports of bacterial keratitis associated with the use of multiple-dose containers of topical ophthalmic products. These containers had been inadvertently contaminated by patients who, in most cases, had a concurrent corneal disease or a disruption of the ocular epithelial surface. (See PRECAUTIONS, *Information for Patients*.)

There is an increased potential for developing corneal edema in patients with low endothelial cell counts. Precautions should be used when prescribing COSOPT to this group of patients.

Information for Patients

Patients with bronchial asthma, a history of bronchial asthma, severe chronic obstructive pulmonary disease, sinus bradycardia, second or third degree atrioventricular block, or cardiac failure should be advised not to take this product. (See CONTRAINDICATIONS.)

COSOPT contains dorzolamide (which is a sulfonamide) and, although administered topically, is absorbed systemically. Therefore the same types of adverse reactions that are attributable to sulfonamides may occur with topical administration. Patients should be advised that if serious or unusual reactions or signs of hypersensitivity occur, they should discontinue the use of the product (see WARNINGS).

Patients should be advised that if they develop any ocular reactions, particularly conjunctivitis and lid reactions, they should discontinue use and seek their physician's advice.

Patients should be instructed to avoid allowing the tip of the dispensing container to contact the eye or surrounding structures.

Patients should also be instructed that ocular solutions, if handled improperly or if the tip of the dispensing container contacts the eye or surrounding structures, can become contaminated by common bacteria known to cause ocular infections. Serious damage to the eye and subsequent loss of vision may result from using contaminated solutions. (See PRECAUTIONS, *General*.)

Patients also should be advised that if they have ocular surgery or develop an intercurrent ocular condition (e.g., trauma or infection), they should immediately seek their physician's advice concerning the continued use of the present multidose container.

If more than one topical ophthalmic drug is being used, the drugs should be administered at least ten minutes apart.

Patients should be advised that COSOPT contains benzalkonium chloride which may be absorbed by soft contact lenses. Contact lenses should be removed prior to administration of the solution. Lenses may be reinserted 15 minutes following administration of COSOPT.

Drug Interactions

Carbonic anhydrase inhibitors: There is a potential for an additive effect on the known systemic effects of carbonic anhydrase inhibition in patients receiving an oral carbonic anhydrase inhibitor and COSOPT. The concomitant administration of COSOPT and oral carbonic anhydrase inhibitors is not recommended.

Acid-base disturbances: Although acid-base and electrolyte disturbances were not reported in the clinical trials with dorzolamide hydrochloride ophthalmic solution, these disturbances have been reported with oral carbonic anhydrase inhibitors and have, in some instances, resulted in drug interactions (e.g., toxicity associated with high-dose salicylate therapy). Therefore, the potential for such drug interactions should be considered in patients receiving COSOPT.

Beta-adrenergic blocking agents: Patients who are receiving a beta-adrenergic blocking agent orally and COSOPT should be observed for potential additive effects of beta-blockade, both systemic and on intraocular pressure. The concomitant use of two topical beta-adrenergic blocking agents is not recommended.

Calcium antagonists: Caution should be used in the coadministration of beta-adrenergic blocking agents, such as COSOPT, and oral or intravenous calcium antagonists because of possible atrioventricular conduction disturbances, left ventricular failure, and hypotension. In patients with impaired cardiac function, coadministration should be avoided.

Catecholamine-depleting drugs: Close observation of the patient is recommended when a beta-blocker is administered to patients receiving catecholamine-depleting drugs such as reserpine, because of possible additive effects and the production of hypotension and/or marked bradycardia, which may result in vertigo, syncope, or postural hypotension.

Digitalis and calcium antagonists: The concomitant use of beta-adrenergic blocking agents with digitalis and calcium antagonists may have additive effects in prolonging atrioventricular conduction time.

CYP2D6 inhibitors: Potentiated systemic beta-blockade (e.g., decreased heart rate, depression) has been reported during combined treatment with CYP2D6 inhibitors (e.g., quinidine, SSRIs) and timolol.

Clonidine: Oral beta-adrenergic blocking agents may exacerbate the rebound hypertension which can follow the withdrawal of clonidine. There have been no reports of exacerbation of rebound hypertension with ophthalmic timolol maleate.

Injectable Epinephrine: (See PRECAUTIONS, *General*, Anaphylaxis.)

Carcinogenesis, Mutagenesis, Impairment of Fertility

In a two-year study of dorzolamide hydrochloride administered orally to male and female Sprague-Dawley rats, urinary bladder papillomas were seen in male rats in the highest dosage group of 20 mg/kg/day (250 times the recommended human ophthalmic dose). Papillomas were not seen in rats given oral doses equivalent to approximately 12 times the recommended human ophthalmic dose. No treatment-related tumors were seen in a 21-month study in female and male mice given oral doses up to 75 mg/kg/day (~900 times the recommended human ophthalmic dose).

The increased incidence of urinary bladder papillomas seen in the high-dose male rats is a class-effect of carbonic anhydrase inhibitors in rats. Rats are particularly prone to developing papillomas in response to foreign bodies, compounds causing crystalluria, and diverse sodium salts.

No changes in bladder urothelium were seen in dogs given oral dorzolamide hydrochloride for one year at 2 mg/kg/day (25 times the recommended human ophthalmic dose) or monkeys dosed topically to the eye at 0.4 mg/kg/day (~5 times the recommended human ophthalmic dose) for one year.

In a two-year study of timolol maleate administered orally to rats, there was a statistically significant increase in the incidence of adrenal pheochromocytomas in male rats administered 300 mg/kg/day (approximately 42,000 times the systemic exposure following the maximum recommended human ophthalmic dose). Similar differences were not observed in rats administered oral doses equivalent to approximately 14,000 times the maximum recommended human ophthalmic dose.

In a lifetime oral study of timolol maleate in mice, there were statistically significant increases in the incidence of benign and malignant pulmonary tumors, benign uterine polyps and mammary adenocarcinomas in female mice at 500 mg/kg/day, (approximately 71,000 times the systemic exposure following the maximum recommended human ophthalmic dose), but not at 5 or 50 mg/kg/day (approximately 700 or 7,000, respectively, times the systemic exposure following the maximum recommended human ophthalmic dose). In a subsequent study in female mice, in which post-mortem examinations were limited to the uterus and the lungs, a statistically significant increase in the incidence of pulmonary tumors was again observed at 500 mg/kg/day.

The increased occurrence of mammary adenocarcinomas was associated with elevations in serum prolactin which occurred in female mice administered oral timolol at 500 mg/kg/day, but not at doses of 5 or 50 mg/kg/day. An increased incidence of mammary adenocarcinomas in rodents has been associated with administration of several other therapeutic agents that elevate serum prolactin, but no correlation between serum prolactin levels and mammary tumors has been established in humans. Furthermore, in adult human female subjects who received oral dosages of up to 60 mg of timolol maleate (the maximum recommended human oral dosage), there were no clinically meaningful changes in serum prolactin.

The following tests for mutagenic potential were negative for dorzolamide: (1) *in vivo* (mouse) cytogenetic assay; (2) *in vitro* chromosomal aberration assay; (3) alkaline elution assay; (4) V-79 assay; and (5) Ames test.

Timolol maleate was devoid of mutagenic potential when tested *in vivo* (mouse) in the micronucleus test and cytogenetic assay (doses up to 800 mg/kg) and *in vitro* in a neoplastic cell transformation assay (up to 100 µg/mL). In Ames tests the highest concentrations of timolol employed, 5,000 or 10,000 µg/plate, were associated with statistically significant elevations of revertants observed with tester strain TA100 (in seven replicate assays), but not in the remaining three strains. In the assays with tester strain TA100, no consistent dose response relationship was observed, and the ratio of test to control revertants did not reach 2. A ratio of 2 is usually considered the criterion for a positive Ames test.

Reproduction and fertility studies in rats with either timolol maleate or dorzolamide hydrochloride demonstrated no adverse effect on male or female fertility at doses up to approximately 100 times the systemic exposure following the maximum recommended human ophthalmic dose.

Pregnancy

Teratogenic Effects. Pregnancy Category C. Developmental toxicity studies with dorzolamide hydrochloride in rabbits at oral doses of ≥2.5 mg/kg/day (31 times the recommended human ophthalmic dose) revealed malformations of the vertebral bodies. These malformations occurred at doses that caused metabolic acidosis with decreased body weight gain in dams and decreased fetal weights. No treatment-related malformations were seen at 1.0 mg/kg/day (13 times the recommended human ophthalmic dose).

Teratogenicity studies with timolol in mice, rats, and rabbits at oral doses up to 50 mg/kg/day (7,000 times the systemic exposure following the maximum recommended human ophthalmic dose) demonstrated no evidence of fetal malformations. Although delayed fetal ossification was observed at this dose in rats, there were no adverse effects on postnatal development of offspring. Doses of 1000 mg/kg/day (142,000 times the systemic exposure following the maximum recommended human

ophthalmic dose) were maternotoxic in mice and resulted in an increased number of fetal resorptions. Increased fetal resorptions were also seen in rabbits at doses of 14,000 times the systemic exposure following the maximum recommended human ophthalmic dose, in this case without apparent maternotoxicity.

There are no adequate and well-controlled studies in pregnant women. COSOPT should be used during pregnancy only if the potential benefit justifies the potential risk to the fetus.

Nursing Mothers

It is not known whether dorzolamide is excreted in human milk. Timolol maleate has been detected in human milk following oral and ophthalmic drug administration. Because of the potential for serious adverse reactions from COSOPT in nursing infants, a decision should be made whether to discontinue nursing or to discontinue the drug, taking into account the importance of the drug to the mother.

Pediatric Use

The safety and effectiveness of dorzolamide hydrochloride ophthalmic solution and timolol maleate ophthalmic solution have been established when administered individually in pediatric patients aged 2 years and older. Use of these drug products in these children is supported by evidence from adequate and well-controlled studies in children and adults. Safety and efficacy in pediatric patients below the age of 2 years have not been established.

Geriatric Use

No overall differences in safety or effectiveness have been observed between elderly and younger patients.

ADVERSE REACTIONS

COSOPT was evaluated for safety in 1035 patients with elevated intraocular pressure treated for open-angle glaucoma or ocular hypertension. Approximately 5% of all patients discontinued therapy with COSOPT because of adverse reactions. The most frequently reported adverse events were taste perversion (bitter, sour, or unusual taste) or ocular burning and/or stinging in up to 30% of patients. Conjunctival hyperemia, blurred vision, superficial punctate keratitis or eye itching were reported between 5-15% of patients. The following adverse events were reported in 1-5% of patients: abdominal pain, back pain, blepharitis, bronchitis, cloudy vision, conjunctival discharge, conjunctival edema, conjunctival follicles, conjunctival injection, conjunctivitis, corneal erosion, corneal staining, cortical lens opacity, cough, dizziness, dryness of eyes, dyspepsia, eye debris, eye discharge, eye pain, eye tearing, eyelid edema, eyelid erythema, eyelid exudate/scales, eyelid pain or discomfort, foreign body sensation, glaucomatous cupping, headache, hypertension, influenza, lens nucleus coloration, lens opacity, nausea, nuclear lens opacity, pharyngitis, post-subcapsular cataract, sinusitis, upper respiratory infection, urinary tract infection, visual field defect, vitreous detachment.

The following adverse events have occurred either at low incidence (<1%) during clinical trials or have been reported during the use of COSOPT in clinical practice where these events were reported voluntarily from a population of unknown size and frequency of occurrence cannot be determined precisely. They have been chosen for inclusion based on factors such as seriousness, frequency of reporting, possible causal connection to COSOPT, or a combination of these factors: bradycardia, cardiac failure, cerebral vascular accident, chest pain, choroidal detachment following filtration surgery (see PRECAUTIONS, *General*), depression, diarrhea, dry mouth, dyspnea, heart block, hypotension, iridocyclitis, myocardial infarction, nasal congestion, paresthesia, photophobia, respiratory failure, skin rashes, urolithiasis, and vomiting.

Other adverse reactions that have been reported with the individual components are listed below:

Dorzolamide — Allergic/Hypersensitivity: Signs and symptoms of local reactions including palpebral reactions and systemic allergic reactions including angioedema, bronchospasm, pruritus, urticaria; *Body as a Whole:* Asthenia/fatigue; *Skin/Mucous Membranes:* Contact dermatitis, epistaxis, throat irritation; *Special Senses:* Eyelid crusting, signs and symptoms of ocular allergic reaction, and transient myopia.

Timolol (ocular administration) — Body as a Whole: Asthenia/fatigue; *Cardiovascular:* Arrhythmia, syncope, cerebral ischemia, worsening of angina pectoris, palpitation, cardiac arrest, pulmonary

edema, edema, claudication, Raynaud's phenomenon, and cold hands and feet; *Digestive:* Anorexia; *Immunologic:* Systemic lupus erythematosus; *Nervous System/Psychiatric:* Increase in signs and symptoms of myasthenia gravis, somnolence, insomnia, nightmares, behavioral changes and psychic disturbances including confusion, hallucinations, anxiety, disorientation, nervousness, and memory loss; *Skin:* Alopecia, psoriasiform rash or exacerbation of psoriasis; *Hypersensitivity:* Signs and symptoms of systemic allergic reactions, including anaphylaxis, angioedema, urticaria, and localized and generalized rash; *Respiratory:* Bronchospasm (predominantly in patients with pre-existing bronchospastic disease); *Endocrine:* Masked symptoms of hypoglycemia in diabetic patients (see WARNINGS); *Special Senses:* Ptosis, decreased corneal sensitivity, cystoid macular edema, visual disturbances including refractive changes and diplopia, pseudopemphigoid, and tinnitus; *Urogenital:* Retroperitoneal fibrosis, decreased libido, impotence, and Peyronie's disease.

The following additional adverse effects have been reported in clinical experience with ORAL timolol maleate or other ORAL beta-blocking agents and may be considered potential effects of ophthalmic timolol maleate: *Allergic:* Erythematous rash, fever combined with aching and sore throat, laryngospasm with respiratory distress; *Body as a Whole:* Extremity pain, decreased exercise tolerance, weight loss; *Cardiovascular:* Worsening of arterial insufficiency, vasodilatation; *Digestive:* Gastrointestinal pain, hepatomegaly, mesenteric arterial thrombosis, ischemic colitis; *Hematologic:* Nonthrombocytopenic purpura; thrombocytopenic purpura, agranulocytosis; *Endocrine:* Hyperglycemia, hypoglycemia; *Skin:* Pruritus, skin irritation, increased pigmentation, sweating; *Musculoskeletal:* Arthralgia; *Nervous System/Psychiatric:* Vertigo, local weakness, diminished concentration, reversible mental depression progressing to catatonia, an acute reversible syndrome characterized by disorientation for time and place, emotional lability, slightly clouded sensorium, and decreased performance on neuropsychometrics; *Respiratory:* Rales, bronchial obstruction; *Urogenital:* Urination difficulties.

OVERDOSAGE

There are no human data available on overdosage with COSOPT.

Symptoms consistent with systemic administration of beta-blockers or carbonic anhydrase inhibitors may occur, including electrolyte imbalance, development of an acidotic state, dizziness, headache, shortness of breath, bradycardia, bronchospasm, cardiac arrest and possible central nervous system effects. Serum electrolyte levels (particularly potassium) and blood pH levels should be monitored (see also ADVERSE REACTIONS).

A study of patients with renal failure showed that timolol did not dialyze readily.

DOSAGE AND ADMINISTRATION

The dose is one drop of COSOPT in the affected eye(s) two times daily.

If more than one topical ophthalmic drug is being used, the drugs should be administered at least ten minutes apart (see also PRECAUTIONS, *Drug Interactions*).

HOW SUPPLIED

COSOPT Ophthalmic Solution is a clear, colorless to nearly colorless, slightly viscous solution.

No. 3628 — COSOPT Ophthalmic Solution is supplied in an OCUMETER®* PLUS container, a white, translucent, HDPE plastic ophthalmic dispenser with a controlled drop tip and a white polystyrene cap with dark blue label as follows:

NDC 0006-3628-36, 10 mL in an 18 mL capacity bottle.

Storage

Store COSOPT at 15-30°C (59-86°F). Protect from light.

---

* Registered trademark of MERCK & CO., Inc.

INSTRUCTIONS FOR USE

Please follow these instructions carefully when using COSOPT. Use COSOPT as prescribed by your doctor.

1. If you use other topically applied ophthalmic medications, they should be administered at least 10 minutes before or after COSOPT.

2. Wash hands before each use.

3. Before using the medication for the first time, be sure the Safety Strip on the front of the bottle is unbroken. A gap between the bottle and the cap is normal for an unopened bottle.

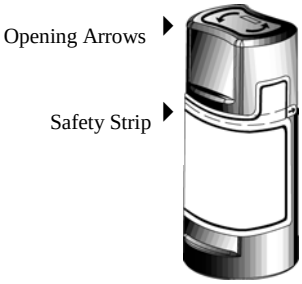

4. Tear off the Safety Strip to break the seal.

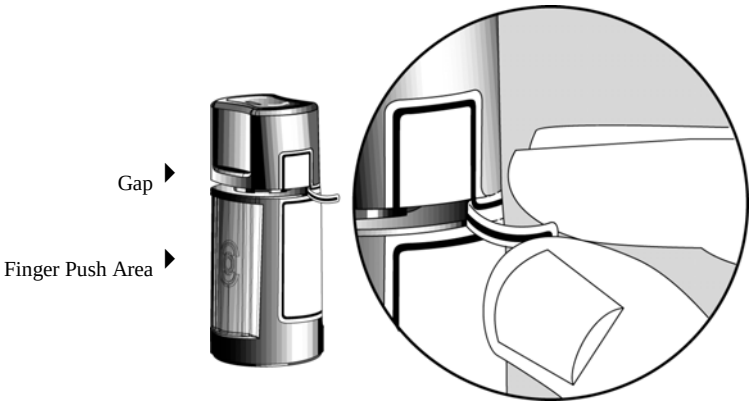

5. To open the bottle, unscrew the cap by turning as indicated by the arrows on the top of the cap. Do not pull the cap directly up and away from the bottle. Pulling the cap directly up will prevent your dispenser from operating properly.

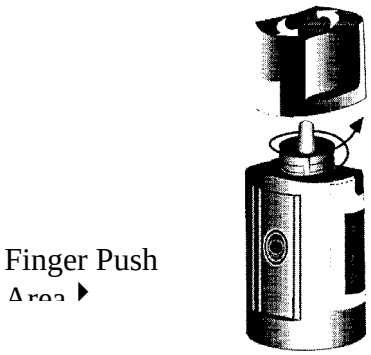

6. Tilt your head back and pull your lower eyelid down slightly to form a pocket between your eyelid and your eye.

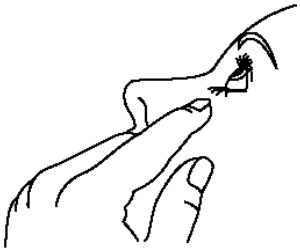

7. Invert the bottle, and press lightly with the thumb or index finger over the “Finger Push Area” (as shown) until a single drop is dispensed into the eye as directed by your doctor.

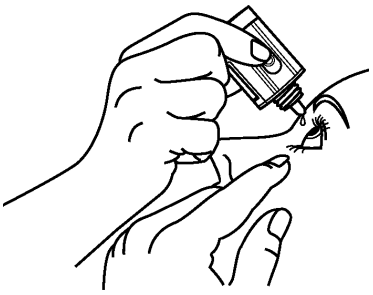

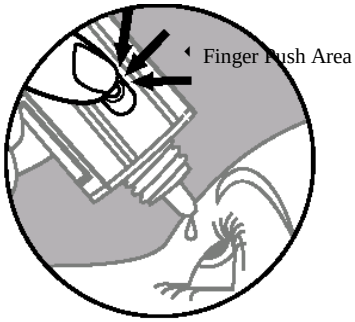

DO NOT TOUCH YOUR EYE OR EYELID WITH THE DROPPER TIP.

OPHTHALMIC MEDICATIONS, IF HANDLED IMPROPERLY, CAN BECOME CONTAMINATED BY COMMON BACTERIA KNOWN TO CAUSE EYE INFECTIONS. SERIOUS DAMAGE TO THE EYE AND SUBSEQUENT LOSS OF VISION MAY RESULT FROM USING CONTAMINATED OPHTHALMIC MEDICATIONS. IF YOU THINK YOUR MEDICATION MAY BE CONTAMINATED, OR IF YOU DEVELOP AN EYE INFECTION, CONTACT YOUR DOCTOR IMMEDIATELY CONCERNING CONTINUED USE OF THIS BOTTLE.

8. If drop dispensing is difficult after opening for the first time, replace the cap on the bottle and tighten (DO NOT OVERTIGHTEN) and then remove by turning the cap in the opposite direction as indicated by the arrows on the top of the cap.

9. Repeat steps 6 & 7 with the other eye if instructed to do so by your doctor.

10. Replace the cap by turning until it is firmly touching the bottle. The arrow on the left side of the cap must be aligned with the arrow on the left side of the bottle label for proper closure. Do not overtighten or you may damage the bottle and cap.

11. The dispenser tip is designed to provide a single drop; therefore, do NOT enlarge the hole of the dispenser tip.

12. After you have used all doses, there will be some COSOPT left in the bottle. You should not be concerned since an extra amount of COSOPT has been added and you will get the full amount of COSOPT that your doctor prescribed. Do not attempt to remove the excess medicine from the bottle.

WARNING: Keep out of reach of children.
If you have any questions about the use of COSOPT, please consult your doctor.

Manuf. for:
MERCK & CO., INC., Whitehouse Station, NJ 08889, USA

By: Laboratories Merck Sharp & Dohme-Chibret
63963 Clermont-Ferrand Cedex 9, France

Issued July 2008

309A-07/08 516023Z