This guidance was written prior to the February 27, 1997 implementation of FDA's Good Guidance Practices, GGP's. It does not create or confer rights for or on any person and does not operate to bind FDA or the public. An alternative approach may be used if such approach satisfies the requirements of the applicable statute, regulations, or both. This guidance will be updated in the next revision to include the standard elements of GGP's.

DEPARTMENT OF HEALTH & HUMAN SERVICES

Public Health Service

Food and Drug Administration
Rockville MD 20857

Important Information About Rophae Intraocular Lenses

August 20, 1992

Dear Eyecare Practitioner:

This is to alert you to a serious problem associated with Rophae intraocular lenses (IOLs), which were implanted under investigational studies in 1986-1987. The quality of these IOLs can be so poor that patients' vision may be seriously compromised. Of the Rophae IOLs implanted in the U.S., over 95% were implanted at St. Luke's Cataract and Intraocular Lens Institute in Tarpon Springs, Florida.

Background

On August 10, 1987, FDA withdrew approval for the investigational device exemption (IDE) applications under which the Rophae Lens Company was distributing IOLs. About 3,000 Rophae IOLs were implanted in the U.S. under these IDE applications in 1986 and 1987, and an unknown number have been implanted outside the U.S. since 1985. All Rophae IOLs utilize a one-piece design, and over 97% of the Rophae IOLs implanted in the United States are posterior chamber models. Attached are graphics of the 5 Rophae models that were implanted in the United States.

Visual Problems

Patient complaints associated with poor quality of vision have resulted in the explantation of more than 60 of these Rophae IOLs. Using methods that were developed by FDA in 1991, FDA performed optical testing on 43 explanted Rophae IOLs. The results of that testing indicate that the majority of those IOLs (approximately 70%) are of extremely poor quality. FDA's testing of Rophae IOLs has shown them to be of a vision-limiting quality that may cause distorted, blurry vision, and ghost images.

Therefore, physicians evaluating patients with Rophae IOLs should be aware that any compromised vision or visual disturbances may be directly related to the quality of this implant. These patients should be advised that tasks performed at low illumination levels or requiring high visual acuity or good depth perception may be seriously impaired by the poor quality, dim image produced by their Rophae IOL. Examples of such tasks are driving at night or in inclement weather, or street crossing under dusk or night conditions.

Diagnostic Evaluation

Direct ophthalmoscopy of the fundus in patients suspected of having a Rophae IOL may provide important diagnostic information about the quality of the implant. A poor image of the fundus, in the absence of other media problems on slit lamp examination, may indicate that the implanted IOL is of poor quality.

Physicians should not rely solely on the results of Snellen visual acuity testing in their evaluation of patients with Rophae IOLs. Snellen testing is not a sensitive method to determine the visual changes associated with a poor quality IOL implanted in a patient. At the high spatial frequencies and chart luminances associated with Snellen testing, the human visual system has a large reserve capacity and a poor quality IOL implanted in a patient may only result in a small decrease in Snellen acuity.

Patient complaints of distorted or blurry vision, ghost images, or other complaints with the quality of their vision should be the primary indication that an implanted Rophae lens may be defective. In patients without other vision-limiting pathology present, contrast sensitivity testing may provide evidence of compromised vision. However, FDA is not aware of any available contrast sensitivity data on patients who received Rophae lenses that could be used for comparison purposes.

Patient Management

Patients with a clinically significant decrease in visual performance or function as a result of the Rophae IOL may require it to be replaced. In determining whether to explant the IOL, physicians should consider these factors:

1. the patient's lifestyle and need to perform tasks under low light conditions (especially nighttime driving);

2. the patient's need for stereopsis (a factor because of the potential suppression of the vision from the eye with the poor quality IOL); and

3. the risk/benefit ratio associated with explantation for that particular patient.

Additional Information

Recent testing performed by FDA has confirmed that, with the exception of the Rophae IOLs, the optical quality of most IOLs distributed in the U.S. is extremely high. Existing data do not suggest a similar problem with other firms. FDA-approved quality control procedures, when followed by IOL manufacturers, appear to adequately protect the public against the release of poor quality IOLs.

Any questions should be addressed to:

Division of Ophthalmic Devices (HFZ-460)
Center for Devices and Radiological Health
Food and Drug Administration
1390 Piccard Drive
Rockville, MD 20850

Sincerely yours,

James S. Benson

James S. Benson
Director
Center for Devices
and Radiological Health

Attachment

ATTACHMENT

These graphics represent the Rophae models that were implanted in the United States. All of the models are posterior chamber designs with the exception of Model RLC001, which is an anterior chamber design and Model RLF004 which is designed for implantation in either chamber. Listed values are in millimeters.

Model RLC003

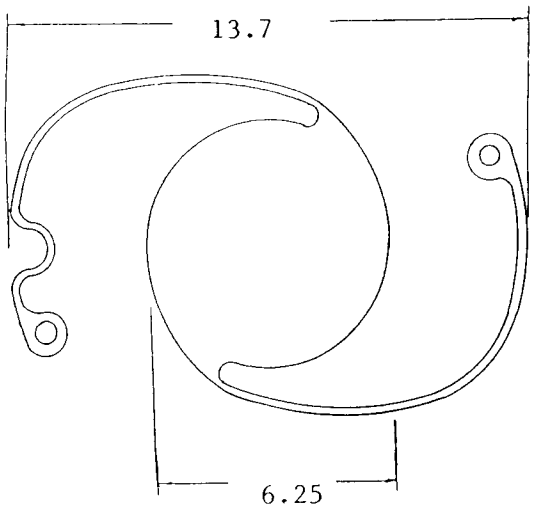

Model RLF004

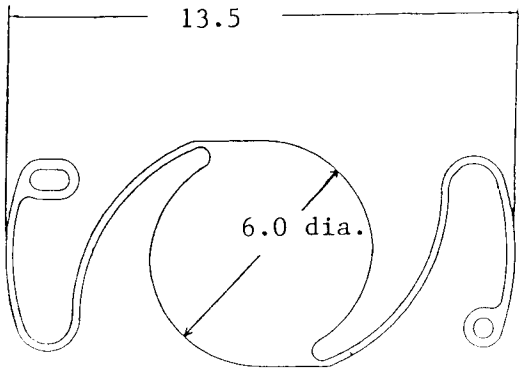

Model RLC6

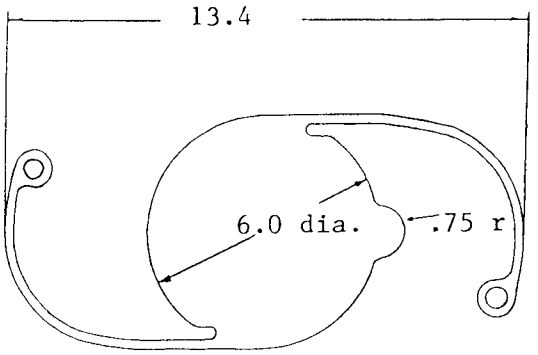

Model RLC001

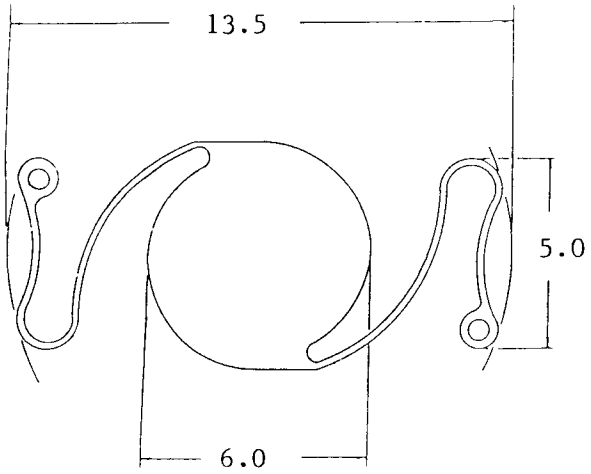

Model RLC7

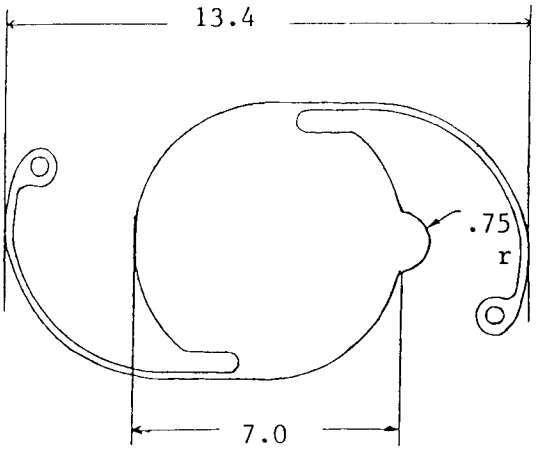

HFZ-460

U.S. DEPARTMENT OF
HEALTH AND HUMAN SERVICES

Public Health Service
Food and Drug Administration
Center for Devices and Radiological Health
Rockville, Maryland 20857

OFFICIAL BUSINESS
PENALTY FOR PRIVATE USE, $300

FIRST CLASS MAIL
POSTAGE AND FEES PAID
PHS/FDA
PERMIT NO. G-285

Important Information About Rophae Intraocular Lenses