Records processed under FOIA Request 2013-6292; Released 10/17/14

FEB 4 1999

II. Safety and Effectiveness Summary

K984053

Determination of substantial equivalence
The ICP monitoring device and method were first described in an article published in 1973. Over the years the device has come into widespread use.

Medtronic PS Medical has, with input from neurosurgeons, developed a device design, which is considered to be equivalent to the predicate Codman External Drainage System II (K902257, ~~K920938~~). The Medtronic PS Medical Becker EDMS is a complete closed system indicated for the draining and monitoring of CSF flow from the lateral ventricles or lumbar subarachnoid space.

K910938 - listed incorrectly throughout

Medtronic PS Medical considers the Medtronic PS Medical Becker EDMS to be substantially equivalent to the Codman External Drainage System II (K902257, K920938), currently in commercial distribution. The predicate device is used for draining cerebrospinal fluid (CSF) and other fluids of similar physical characteristics as a means of reducing and controlling increased intracranial volume and pressure when the insertion of a permanent internal shunt is not needed. A comparison of the Codman External Drainage System II and the Medtronic PS Medical Becker EDMS is included in Tables 1 and 2.

Medtronic PS Medical considers the Becker EDMS to be safe, effective and substantially equivalent in indications, physical characteristics and performance to the noted predicate device. Evidence of this is provided in predicate device product labeling (Attachment 2).

Device Name
Medtronic PS Medical Becker External Drainage and Monitoring System (Becker EDMS).

Predicate Device(s)
Codman External Drainage System II (K902257, K920938)

Device Description
The Medtronic PS Medical Becker EDMS is indicated for the draining and monitoring of CSF flow from the lateral ventricles or lumbar subarachnoid space. The Becker EDMS is substantially equivalent in indications, materials of fabrication, performance characteristics and design specifications as compared with the predicate device, Codman External Drainage System II.

The materials utilized in the Becker EDMS are not substantially different to those used in currently marketed products. The Becker EDMS is comprised of a nondistensible blue striped (proximal end) patient connection line, patient line stopcock, mounting panel/main system section, three non-latex injection sites, and a removable drainage bag with approximate volumetric graduations and microbial filter. A graduated 50 cc

Records processed under FOIA Request 2013-6292; Released 10/17/14

flow chamber with drip former and conical bottom and locking bracket is included on the main system section.

A comparison of the Becker EDMS and predicate device is provided in Table 1.

Intended Use
The Medtronic PS Medical Becker EDMS will be indicated for use as follows:
"Draining and monitoring of CSF flow from the lateral ventricles or lumbar subarachnoid space is indicated in selected patients to reduce intracranial pressure (ICP), e.g. pre-intra- or postoperative; monitor CSF chemistry, cytology and physiology; provide temporary CSF drainage in patients with infected cerebrospinal fluid shunts. The monitoring of the intracranial pressure (ICP) is indicated in selected patients with severe head injury; subarachnoid hemorrhage graded III, IV or V preoperatively; Reyes syndrome or similar encephalopathies; hydrocephalus; intracranial hemorrhage or miscellaneous problems when drainage is to be used as a therapeutic maneuver. Monitoring can also be used to evaluate the status pre-and postoperatively for space occupying lesions."

Draft Medtronic PS Medical product labeling and product literature for the Medtronic PS Medical Becker EDMS is included (Attachment 1).

Intended Use predicate device
The predicate device Codman External Drainage System II is indicated for use as follows:

"Use of the Codman External Drainage System II is indicated for draining cerebrospinal fluid (CSF) and other fluids of similar physical characteristics as a means of reducing and controlling increased intracranial volume and pressure when the insertion of a permanent internal shunt is not indicated."

Product literature for the predicate Codman External Drainage System II is included (Attachment 2).

Questions? Contact FDA/CDRH/OCE/DID at CDRH-FOISTATUS@fda.hhs.gov or 301-796-8118

Records processed under FOIA Request 2013-6292; Released 10/17/14

DEPARTMENT OF HEALTH & HUMAN SERVICES

Public Health Service

Food and Drug Administration
9200 Corporate Boulevard
Rockville MD 20850

FEB 4 1999

Mr. Jeffrey Henderson
Vice President, Quality
Medtronic PS Medical
125 Cremona Drive
Goleta, California 93117-5500

Re: K984053
Becker External Drainage and Monitoring System
Regulatory Class: II
Product Code: JXG
Dated: November 3 1998
Received: November 6, 1998

Dear Mr. Henderson:

We have reviewed your Section 510(k) notification of intent to market the device referenced above and we have determined the device is substantially equivalent (for the indications for use stated in the enclosure) to devices marketed in interstate commerce prior to May 28, 1976, the enactment date of the Medical Device Amendments, or to devices that have been reclassified in accordance with the provisions of the Federal Food, Drug, and Cosmetic Act (Act). You may, therefore, market the device, subject to the general controls provisions of the Act. The general controls provisions of the Act include requirements for annual registration, listing of devices, good manufacturing practice, labeling, and prohibitions against misbranding and adulteration.

If your device is classified (see above) into either class II (Special Controls) or class III (Premarket Approval), it may be subject to such additional controls. Existing major regulations affecting your device can be found in the Code of Federal Regulations, Title 21, Parts 800 to 895. A substantially equivalent determination assumes compliance with the current Good Manufacturing Practice requirement, as set forth in the Quality System Regulation (QS) for Medical Devices: General regulation (21 CFR Part 820) and that, through periodic (QS) inspections, the Food and Drug Administration (FDA) will verify such assumptions. Failure to comply with the GMP regulation may result in regulatory action. In addition, FDA may publish further announcements concerning your device in the Federal Register. Please note: this response to your premarket notification submission does not affect any obligation you might have under sections 531 through 542 of the Act for devices under the Electronic Product Radiation Control provisions, or other Federal laws or regulations.

Questions? Contact FDA/CDRH/OCE/DID at CDRH-FOISTATUS@fda.hhs.gov or 301-796-8118

Records processed under FOIA Request 2013-6292; Released 10/17/14

This letter will allow you to begin marketing your device as described in your 510(k) premarket notification. The FDA finding of substantial equivalence of your device to a legally marketed predicate device results in a classification for your device and thus, permits your device to proceed to the market.

If you desire specific advice for your device on our labeling regulation (21 CFR Part 801 and additionally 809.10 for in vitro diagnostic devices), please contact the Office of Compliance at (301) 594-4595. Additionally, for questions on the promotion and advertising of your device, please contact the Office of Compliance at (301) 594-4639. Also, please note the regulation entitled, "Misbranding by reference to premarket notification" (21 CFR 807.97). Other general information on your responsibilities under the Act may be obtained from the Division of Small Manufacturers Assistance at its toll-free number (800) 638-2041 or (301) 443-6597 or at its internet address "http://www.fda.gov/cdrh/dsmamain.html".

Sincerely yours,

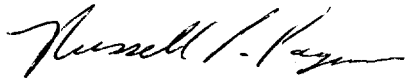

for Celia M. Witten, Ph.D., M.D.
Director
Division of General and
Restorative Devices
Office of Device Evaluation
Center for Devices and
Radiological Health

Enclosure

Questions? Contact FDA/CDRH/OCE/DID at CDRH-FOISTATUS@fda.hhs.gov or 301-796-8118

Records processed under FOIA Request 2013-6292; Released 10/17/14

Device Name: Becker External Drainage and Monitoring System (EDMS)

510(k) Number (if known): K984053

Indications for Use:

"Draining and monitoring of CSF flow from the lateral ventricles or lumbar subarachnoid space is indicated in selected patients to reduce intracranial pressure (ICP), e.g. pre-intra- or postoperative; monitor CSF chemistry, cytology and physiology; provide temporary CSF drainage in patients with infected cerebrospinal fluid shunts. The monitoring of the intracranial pressure (ICP) is indicated in selected patients with severe head injury; subarachnoid hemorrhage graded III, IV or V preoperatively; Reyes syndrome or similar encephalopathies; hydrocephalus; intracranial hemorrhage or miscellaneous problems when drainage is to be used as a therapeutic maneuver. Monitoring can also be used to evaluate the status pre-and postoperatively for space occupying lesions."

(PLEASE DO NOT WRITE BELOW THIS LINE - CONTINUE ON ANOTHER PAGE IF NEEDED)

CONCURRENCE OF CDRH, OFFICE OF DEVICE EVALUATION (ODE)

(Division Sign-Off)
Division of Cardiovascular, Respiratory, and Neurological Devices
510(k) Number K984053

Over the Counter Use:
or
Prescription Use:
(Per 21 CFR 801.109)

(optional format 1-2-96)

Questions? Contact FDA/CDRH/OCE/DID at CDRH-FOISTATUS@fda.hhs.gov or 301-796-8118

Records processed under FOIA Request 2013-6292; Released 10/17/14

DEPARTMENT OF HEALTH & HUMAN SERVICES

Public Health Service
Food And Drug Administration

Memorandum

Date:

From: Document Mail Center (HFZ-401)

Subject: Premarket Notification Number(s): K984053/A3

To: Division Director: NE / DGRD

The attached information has been received by the 510(k) Document Mail Center (DMC), on the above referenced 510(k) submission(s). Since a final decision has been rendered, this record is officially closed.

Please review the attached document and return it to the DMC, with one of the statements checked below. Feel free to note any additional comments below.

Thank you for your cooperation.

_____Information does not change status of the 510(k); no other action required by the DMC; please add to the image file. [THE DIVISION SHOULD PREPARE A CONFIRMATION LETTER - AN EXAMPLE IS AVAILABLE ON THE LAN (K25). THIS DOES NOT APPLY TO TRANSFER OF OWNERSHIP. PLEASE BRING ANY TRANSFER OF OWNERSHIP TO POS.]

_____Additional information requires a new 510(k) however the information submitted is incomplete. Notify the company to submit a new 510(k). [THE DIVISION SHOULD PREPARE THE (K30) LETTER ON THE LAN.]

_____Additional information requires a new 510(k); please process. [THIS INFORMATION WILL BE MADE INTO A NEW 510(k)].

✓ No response necessary (e.g., hard copy of fax for the truthful and accuracy statement or 510(k) statement).

Hardcopies of faxed info.

This information should be returned to the DMC within 10 working days from the date of this memorandum.

Reviewed by: Dwight Y O.K. 6/29/01

Date: 6/28/01

DMC 7/3

1

Questions? Contact FDA/CDRH/OCE/DID at CDRH-FOISTATUS@fda.hhs.gov or 301-796-8118

Records processed under FOIA Request 2013-6292; Released 10/17/14

K984053 / A3

Medtronic

Medtronic PS Medical
125 Cremona Drive
Goleta, CA 93117-5500
Internet: www.medtronic.com
Telephone: (805) 968-1546
Toll-free: (800) 826-5603

February 3, 1999

Food and Drug Administration
Center for Devices and Radiological Health
Document Mail Center (HFZ-401)
9200 Corporate Blvd.
Rockville, MD 20850

Re: 510(k) Amendment K984053- Becker External Drainage and Monitoring System

Dear Mr. Yen:

In response to your telephone communication of February 3, 1999 requesting further information on the Becker External Drainage and Monitoring System (EDMS), I am providing the following information.

If you have any questions or require additional information, please call me at (805) 968-1546 Ext. 1770, or Janet McAuley at Ext. 1773, Fax No. (805) 968-5038.

Sincerely,

for Jeff Henderson

Jeffrey Henderson
Vice President, Quality

jmc

FDA/CDRH/ODE/DMC
FEB 5 10 42 AM '99
RECEIVED

3K
25

2

Questions? Contact FDA/CDRH/OCE/DID at CDRH-FOISTATUS@fda.hhs.gov or 301-796-8118

Records processed under FOIA Request 2013-6292; Released 10/17/14

Question 1. Please provide an explanation concerning the origin of the Indications for Use for the Becker EDMS along with any information pertaining to predicate devices that use equivalent indications. This information is required to specify the reasoning behind the use of the specific indications listed for the Becker EDMS in comparison to the general indications listed for devices of a similar type.

Response: Please reference the following Table:

Please note the indications for the Intracranial Pressure (ICP) and Monitoring System, Becker design and the Becker External Drainage and Monitoring System (EDMS) are the same with the following exception. The Becker EDMS Indications for Use include the addition of a Grade III subarachnoid hemorrhage. A subarachnoid hemorrhage is graded to denote the severity of the bleeding. Our Medical Monitor determined it appropriate to add the grade III hemorrhage to the Indications for Use for the Becker EDMS.

Questions? Contact FDA/CDRH/OCE/DID at CDRH-FOISTATUS@fda.hhs.gov or 301-796-8118

	Medtronic PS Medical Becker EDMS	Codman Drainage System II K954021	Medtronic PS Medical Intracranial Pressure Monitoring System Becker Design K802100	Clinical Neuro Systems MoniTorr K920156	Medtronic PS Medical Niveau Drainage and Monitoring System K983799
Indications	"Draining and monitoring of CSF flow from the lateral ventricles or lumbar subarachnoid space is indicated in selected patients to 1. Reduce intracranial pressure (ICP), e.g. pre-intra- or postoperative; 2. Monitor CSF chemistry, cytology and physiology; 3. Provide temporary CSF drainage in patients with infected cerebrospinal fluid shunts. The monitoring of the intracranial pressure (ICP) is indicated in selected patients with 1. Severe head injury; 2. Subarachnoid hemorrhage graded III, IV or V preoperatively; 3. Reyes syndrome or similar encephalopathies; 4. Hydrocephalus; 5. Intracranial hemorrhage 6. Miscellaneous problems when drainage is to be used as a therapeutic maneuver. Monitoring can also be used to evaluate the status pre- and postoperatively for space occupying lesions."	"Use of the Codman External Drainage System II is indicated for draining cerebrospinal fluid (CSF) and other fluids of similar physical characteristics as a means of reducing and controlling increased intracranial volume and pressure when the insertion of a permanent internal shunt is not indicated"	The monitoring of the intracranial pressure (ICP) is indicated in selected patients with: 1. Severe head injury; 2. Status pre-and postoperatively for space occupying intracranial lesions 3. Subarachnoid hemorrhage graded IV or V preoperatively; 4. Reyes syndrome or similar encephalopathies; 5. Hydrocephalus; 6. Intracranial hemorrhage 7. Miscellaneous problems when ventricular drainage is to be used as a therapeutic maneuver.	"The MoniTorr system allows for drainage and monitoring of CSF from the lateral ventricles of the brain and the lumbar subarachnoid space in selected patients to • reduce intracranial pressure (ICP), • to monitor CSF, • to provide temporary drainage of CSF in patients with infected CSF shunts, and the monitoring of ICP."	"Draining and monitoring of CSF flow from the lateral ventricles or lumbar subarachnoid space is indicated in selected patients to 1. Reduce intracranial pressure (ICP), e.g. pre-intra- or postoperative; 2. Monitor CSF chemistry, cytology and physiology; 3. Provide temporary CSF drainage in patients with infected cerebrospinal fluid shunts. The monitoring of the intracranial pressure (ICP) is indicated in selected patients with 1. Severe head injury; 2. Subarachnoid hemorrhage graded III, IV or V preoperatively; 3. Reyes syndrome or similar encephalopathies; 4. Hydrocephalus; 5. Intracranial hemorrhage 6. Miscellaneous problems when drainage is to be used as a therapeutic maneuver. Monitoring can also be used to evaluate the status pre- and postoperatively for space occupying lesions."

f

Records processed under FOIA Request 2013-6292; Released 10/17/14

DEPARTMENT OF HEALTH & HUMAN SERVICES

Public Health Service

Food and Drug Administration
9200 Corporate Boulevard
Rockville MD 20850

FEB 4 1999

Mr. Jeffrey Henderson
Vice President, Quality
Medtronic PS Medical
125 Cremona Drive
Goleta, California 93117-5500

Re: K984053
Becker External Drainage and Monitoring System
Regulatory Class: II
Product Code: JXG
Dated: November 3 1998
Received: November 6, 1998

Dear Mr. Henderson:

We have reviewed your Section 510(k) notification of intent to market the device referenced above and we have determined the device is substantially equivalent (for the indications for use stated in the enclosure) to devices marketed in interstate commerce prior to May 28, 1976, the enactment date of the Medical Device Amendments, or to devices that have been reclassified in accordance with the provisions of the Federal Food, Drug, and Cosmetic Act (Act). You may, therefore, market the device, subject to the general controls provisions of the Act. The general controls provisions of the Act include requirements for annual registration, listing of devices, good manufacturing practice, labeling, and prohibitions against misbranding and adulteration.

If your device is classified (see above) into either class II (Special Controls) or class III (Premarket Approval), it may be subject to such additional controls. Existing major regulations affecting your device can be found in the Code of Federal Regulations, Title 21, Parts 800 to 895. A substantially equivalent determination assumes compliance with the current Good Manufacturing Practice requirement, as set forth in the Quality System Regulation (QS) for Medical Devices: General regulation (21 CFR Part 820) and that, through periodic (QS) inspections, the Food and Drug Administration (FDA) will verify such assumptions. Failure to comply with the GMP regulation may result in regulatory action. In addition, FDA may publish further announcements concerning your device in the Federal Register. Please note: this response to your premarket notification submission does not affect any obligation you might have under sections 531 through 542 of the Act for devices under the Electronic Product Radiation Control provisions, or other Federal laws or regulations.

Questions? Contact FDA/CDRH/OCE/DID at CDRH-FOISTATUS@fda.hhs.gov or 301-796-8118

Records processed under FOIA Request 2013-6292; Released 10/17/14

This letter will allow you to begin marketing your device as described in your 510(k) premarket notification. The FDA finding of substantial equivalence of your device to a legally marketed predicate device results in a classification for your device and thus, permits your device to proceed to the market.

If you desire specific advice for your device on our labeling regulation (21 CFR Part 801 and additionally 809.10 for in vitro diagnostic devices), please contact the Office of Compliance at (301) 594-4595. Additionally, for questions on the promotion and advertising of your device, please contact the Office of Compliance at (301) 594-4639. Also, please note the regulation entitled, "Misbranding by reference to premarket notification" (21 CFR 807.97). Other general information on your responsibilities under the Act may be obtained from the Division of Small Manufacturers Assistance at its toll-free number (800) 638-2041 or (301) 443-6597 or at its internet address "http://www.fda.gov/cdrh/dsmamain.html".

Sincerely yours,

for Celia M. Witten, Ph.D., M.D.
Director
Division of General and
Restorative Devices
Office of Device Evaluation
Center for Devices and
Radiological Health

Enclosure

Questions? Contact FDA/CDRH/OCE/DID at CDRH-FOISTATUS@fda.hhs.gov or 301-796-8118

Records processed under FOIA Request 2013-6292; Released 10/17/14

Device Name: Becker External Drainage and Monitoring System (EDMS)

510(k) Number (if known): K984053

Indications for Use:

"Draining and monitoring of CSF flow from the lateral ventricles or lumbar subarachnoid space is indicated in selected patients to reduce intracranial pressure (ICP), e.g. pre-intra- or postoperative; monitor CSF chemistry, cytology and physiology; provide temporary CSF drainage in patients with infected cerebrospinal fluid shunts. The monitoring of the intracranial pressure (ICP) is indicated in selected patients with severe head injury; subarachnoid hemorrhage graded III, IV or V preoperatively; Reyes syndrome or similar encephalopathies; hydrocephalus; intracranial hemorrhage or miscellaneous problems when drainage is to be used as a therapeutic maneuver. Monitoring can also be used to evaluate the status pre-and postoperatively for space occupying lesions."

(PLEASE DO NOT WRITE BELOW THIS LINE - CONTINUE ON ANOTHER PAGE IF NEEDED)

CONCURRENCE OF CDRH, OFFICE OF DEVICE EVALUATION (ODE)

(Division Sign-Off)
Division of Cardiovascular, Respiratory, and Neurological Devices
510(k) Number K984053

Over the Counter Use:
or
Prescription Use:
(Per 21 CFR 801.109)

(optional format 1-2-96)

Questions? Contact FDA/CDRH/OCE/DID at CDRH-FOISTATUS@fda.hhs.gov or 301-796-8118

Records processed under FOIA Request 2013-6292; Released 10/17/14

DEPARTMENT OF HEALTH & HUMAN SERVICES

Public Health Service
Food and Drug Administration
Memorandum

From: Reviewer(s) Name(s) DWIGHT YEN

Subject: 510(k) Number K984053

To: The Record - It is my recommendation that the subject 510(k) Notification:

- ☐ Refused to accept.
- ☐ Requires additional information (other than refuse to accept).
- ☐ Accepted for review _____.
- ☑ Is substantially equivalent to marketed devices.
- ☐ NOT substantially equivalent to marketed devices.
- ☐ Other (e.g., exempt by regulation, not a device, duplicate, etc.)

Is the device subject to Postmarket Surveillance?	☐ YES	☑ NO
Is this device subject to the Tracking Regulation?	☐ YES	☑ NO
Was clinical data necessary to support the review of this 510(k)?	☐ YES	☑ NO
Is this a prescription device?	☑ YES	☐ NO
Was this 510(k) reviewed by a Third Party?	☐ YES	☑ NO
Special	☐ YES	☑ NO
Abbreviated	☐ YES	☑ NO

This 510(k) contains:

Truthful and Accurate Statement ☐ Requested ☑ Enclosed

☑ A 510(k) summary OR ☐ A 510(k) statement

☐ The required certification and summary for class III devices

☑ The Indication for Use form (required for originals received 1-1-96 and after)

☐ Animal Source Material ☐ Human Tissue Product ☐ Human Cell Product ☐ Human Extraction Product

(Please Check All That Apply)

The submitter requests under 21 CFR 807.95 (doesn't apply for SE's):

Material of Biological Origin ☐ YES ☑ NO

Predicate Product Code with Class: 84 JXG Class II

Additional Product Code(s) with panel (optional) _____

Review: Neil R. Ogden (Branch Chief) GSDB (Branch Code) 2/4/99 (Date)

Final Review: Nina Payne for JRO (Division Director) 2/4/99 (Date)

Questions? Contact FDA/CDRH/OCE/DID at CDRH-FOISTATUS@fda.hhs.gov or 301-796-8118

Records processed under FOIA Request 2013-6292; Released 10/17/14

510(k) "SUBSTANTIAL EQUIVALENCE" DECISION-MAKING PROCESS (DETAILED)

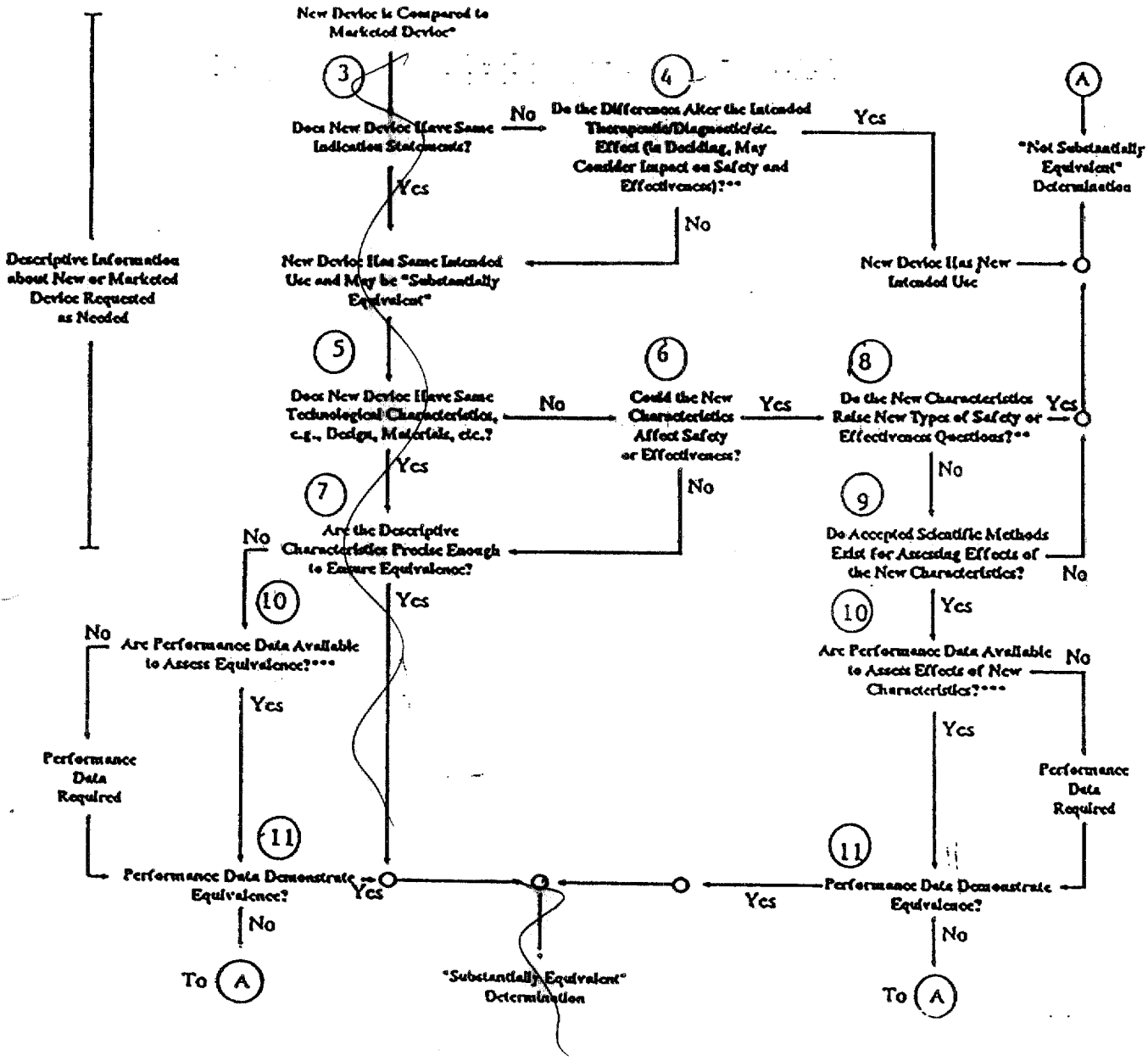

* 510(k) submissions compare new devices to marketed devices. FDA requests additional information if the relationship between marketed and "predicate" (pre-Amendments or reclassified post-Amendments) devices is unclear.

** This decision is normally based on descriptive information alone, but limited testing information is sometimes required.

*** Data may be in the 510(k), other 510(k)s, the Center's classification files, or the literature.

Questions? Contact FDA/CDRH/OCE/DID at CDRH-FOISTATUS@fda.hhs.gov or 301-796-8118

Records processed under FOIA Request 2013-6292; Released 10/17/14

510K Memo Record

Date: 4 February 1999

To: The record K984053
From: Dwight Yen, Electronics Engineer (HFZ 410)

Subject: Premarket notification from Medtronic PS Medical for the Becker External Drainage and Monitoring System

Contact: Jeffrey Henderson, VP Quality (805)968-1546 x1770

Description: The Becker External Drainage and Monitoring System (EDMS) is comprised of a non-distensible blue striped patient connection line, patient line stopcock, mounting panel/main system section, three non-latex injection sites, and a removable drainage bag with approximate volumetric graduations and microbial filter. A graduated 50 cc flow chamber and locking bracket is included on the main system section. The EDMS allows connection with intracranial pressure (ICP) monitoring equipment and other external equipment at the patient connection line stopcock or at the system stopcock, but these devices are not included as part of these system.

The original submission (K972559) was reviewed by Megan Moynahan, in DCRND. The submission was placed on hold on September 19, 1997. Because the sponsor did not respond until November 1998, the previous submission had closed. The sponsor responded to the 3 questions raised in the deficiency letter.

1. Described all product and process qualification tests and summarize results.
2. Described shelf life test to establish 5 year date.
3. Described the design of the system to assure that retrograde fluid flow is not possible.

Additional questions came up in my review of this submission. First, the indication for use statement was unusually specific for this type of device. The sponsor had cited specific illness (i.e. sever head injury, Reyes syndrome). This is different from the predicates. The sponsor was asked to provide equivalent predicate indication or to provide data to support this claim (i.e. literature references). The sponsor indicated that the Medtronic PS Medical Niveau Drainage and Monitoring System (K983799) has the identical indication. Second, the instruction for use of the device had an incorrect reference to a drawing. This error could

Questions? Contact FDA/CDRH/OCE/DID at CDRH-FOISTATUS@fda.hhs.gov or 301-796-8118

Records processed under FOIA Request 2013-6292; Released 10/17/14

result in an improper use of the device that may cause further injury to the patient. The sponsor has corrected this error.

Intended Use: The system is used for draining and monitoring of CSF flow from the lateral ventricles or lumbar subarachnoid space in selected patients to reduce intracranial pressure (ICP), and to provide temporary CSF drainage in patients with infected CSF shunts. The monitoring of ICP is indicated in selected patients with severe head injury, subarachnoid hemorrhage graded III, IV or V preoperatively, Reyes syndrome or similar encephalopathies, hydrocephalus, intracranial hemorrhage or miscellaneous problems when drainage is to be used as a therapeutic maneuver. Monitoring can also be used to evaluate the status pre- and post-operatively for space occupying lesions. This is identical to the Niveau Drainage and Monitoring System (K983799).

Predicates: The sponsor compared this device to the Codman External Drainage System II (K902257, K910938). However, the EDMS has modified it's intended use/indication for use as described above. In addition, the system has several design changes. First, a new multi-port stopcock is designed to provide connection to a pressure transducer. Second, the location of the anti-reflux valve (or one way valve) is moved from the top of the drip chamber to the top of the drainage bag. However, the sponsor explained that the valve is used to allow the drainage bag to be removed and replaced without the risk of leakage. The valve is not used to prevent reflux. Retrograde flow is not possible is the device is used as described in the instruction manual. There is no new issue of safety and effectiveness. The device is SE to predicates.

Labeling: Draft package label and instruction for use are provided. The sponsor has corrected a labeling error that showed the off positions of the stopcock.

Sterility: (b)(4) sterility [redacted]

Materials: There is no direct patient contact materials in the system. The sponsor states that the materials used are similar to materials used to fabricate the predicate Codman External Drainage system. A complete list of materials used is provided.

Questions? Contact FDA/CDRH/OCE/DID at CDRH-FOISTATUS@fda.hhs.gov or 301-796-8118

Records processed under FOIA Request 2013-6292; Released 10/17/14

Technical: Engineering drawings are provided.

An Indication for use, a 510K Summary, a Truthful and Accurate Statement are provided.

RECOMMENDATION: SE to predicates, 84 JXG Class II.

Dwight Yen

Dwight Yen

I concur with SE

Neil 2/4/99

Questions? Contact FDA/CDRH/OCE/DID at CDRH-FOISTATUS@fda.hhs.gov or 301-796-8118

8

Records processed under FOIA Request 2013-6292; Released 10/17/14

Medtronic

Medtronic PS Medical
125 Cremona Drive
Goleta, CA 93117
Telephone: (805) 968-1546
Toll Free: (800) 826-5603
FAX: (805) 968-5038

Fax Cover Sheet

DATE: 2-4-99 TIME: 12:09

TO: Dwight Yen PHONE: FAX:

FROM: Janet M Shirley PHONE: FAX: 301-827-4350

RE: K984053

CC:

Number of pages including cover sheet: 4

Message

Questions? Contact FDA/CDRH/OCE/DID at CDRH-FOISTATUS@fda.hhs.gov or 301-796-8118

Records processed under FOIA Request 2013-6202; Released 10/17/14

Medtronic

Medtronic PS Medical
125 Cremona Drive
Goleta, CA 93117-5500
Internet: www.medtronic.com
Telephone: (805) 968-1546
Toll-free: (800) 826-5603

February 3, 1999

Food and Drug Administration
Center for Devices and Radiological Health
Document Mail Center (HFZ-401)
9200 Corporate Blvd.
Rockville, MD 20850

Re: 510(k) Amendment K984053- Becker External Drainage and Monitoring System

Dear Mr. Yen:

In response to your telephone communication of February 3, 1999 requesting further information on the Becker External Drainage and Monitoring System (EDMS), I am providing the following information.

If you have any questions or require additional information, please call me at (805) 968-1546 Ext. 1770, or Janet McAuley at Ext. 1773, Fax No. (805) 968-5038.

Sincerely,

Jeffrey Henderson
Vice President, Quality

jmc

10

Questions? Contact FDA/CDRH/OCE/DID at CDRH-FOISTATUS@fda.hhs.gov or 301-796-8118

Records processed under FOIA Request 2013-6292; Released 10/17/14

Question 1. Please provide an explanation concerning the origin of the Indications for Use for the Becker EDMS along with any information pertaining to predicate devices that use equivalent indications. This information is required to specify the reasoning behind the use of the specific indications listed for the Becker EDMS in comparison to the general indications listed for devices of a similar type.

Response: Please reference the following Table:

Please note the indications for the Intracranial Pressure (ICP) and Monitoring System, Becker design and the Becker External Drainage and Monitoring System (EDMS) are the same with the following exception. The Becker EDMS Indications for Use include the addition of a Grade III subarachnoid hemorrhage. A subarachnoid hemorrhage is graded to denote the severity of the bleeding. Our Medical Monitor determined it appropriate to add the grade III hemorrhage to the Indications for Use for the Becker EDMS.

Questions? Contact FDA/CDRH/OCE/DID at CDRH-FOISTATUS@fda.hhs.gov or 301-796-8118

Records processed under FOIA Request 2013-6292; Released 10/17/14

	Medtronic PS Medical Becker EDMS	Codman Drainage System II K954021	Medtronic PS Medical Intracranial Pressure Monitoring System Becker Design K802100	Clinical Neuro Systems MoniTorr K920156	Medtronic PS Medical Niveau Drainage and Monitoring System K983799
Indications	"Draining and monitoring of CSF flow from the lateral ventricles or lumbar subarachnoid space is indicated in selected patients to 1. Reduce intracranial pressure (ICP), e.g. pre-intra- or postoperative; 2. Monitor CSF chemistry, cytology and physiology; 3. Provide temporary CSF drainage in patients with infected cerebrospinal fluid shunts. The monitoring of the intracranial pressure (ICP) is indicated in selected patients with 1. Severe head injury; 2. Subarachnoid hemorrhage graded III, IV or V preoperatively; 3. Reyes syndrome or similar encephalopathies; 4. Hydrocephalus; 5. Intracranial hemorrhage 6. Miscellaneous problems when drainage is to be used as a therapeutic maneuver. Monitoring can also be used to evaluate the status pre- and postoperatively for space occupying lesions."	"Use of the Codman External Drainage System II is indicated for draining cerebrospinal fluid (CSF) and other fluids of similar physical characteristics as a means of reducing and controlling increased intracranial volume and pressure when the insertion of a permanent internal shunt is not indicated"	The monitoring of the intracranial pressure (ICP) is indicated in selected patients with: 1. Severe head injury; 2. Status pre-and postoperatively for space occupying intracranial lesions 3. Subarachnoid hemorrhage graded IV or V preoperatively; 4. Reyes syndrome or similar encephalopathies; 5. Hydrocephalus; 6. Intracranial hemorrhage 7. Miscellaneous problems when ventricular drainage is to be used as a therapeutic maneuver.	"The MoniTorr system allows for drainage and monitoring of CSF from the lateral ventricles of the brain and the lumbar subarachnoid space in selected patients to • reduce intracranial pressure (ICP), • to monitor CSF, • to provide temporary drainage of CSF in patients with infected CSF shunts, and the monitoring of ICP."	"Draining and monitoring of CSF flow from the lateral ventricles or lumbar subarachnoid space is indicated in selected patients to 1. Reduce intracranial pressure (ICP), e.g. pre-intra- or postoperative; 2. Monitor CSF chemistry, cytology and physiology; 3. Provide temporary CSF drainage in patients with infected cerebrospinal fluid shunts. The monitoring of the intracranial pressure (ICP) is indicated in selected patients with 1. Severe head injury; 2. Subarachnoid hemorrhage graded III, IV or V preoperatively; 3. Reyes syndrome or similar encephalopathies; 4. Hydrocephalus; 5. Intracranial hemorrhage 6. Miscellaneous problems when drainage is to be used as a therapeutic maneuver. Monitoring can also be used to evaluate the status pre- and postoperatively for space occupying lesions."

Questions? Contact FDA/CDRH/OCE/DID at CDRH-FOISTATUS@fda.hhs.gov or 301-796-8118

Records processed under FOIA Request 2013-6292; Released 10/17/14

K984053/A2

Medtronic

Medtronic PS Medical
125 Cremona Drive
Goleta, CA 93117-5500 USA
Telephone: (805) 968-1546
Toll Free: (800) 826-5603
FAX: (805) 968-6889

RECEIVED
FEB 1 10 44 AM '99
FDA/CDRH/OOE/DMC

January 29, 1999

Food and Drug Administration
Center for Devices and Radiological Health
Document Mail Center (HFZ-401)
9200 Corporate Blvd.
Rockville, MD 20850

Re: 510(k) Amendment K984053- Becker External Drainage and Monitoring System

Dear Mr. Yen:

In response to your telephone communication of January 29, 1999 to Janet McAuley, requesting further information on the Becker External Drainage and Monitoring System (EDMS), the attached information is provided.

The descriptions of Figure 2.3 and 2.4 on page 28 of 123 of the original submission were found to be reversed. This error is corrected and a revised page is attached.

If you have any questions or require additional information, please call me at (805) 968-1546 Ext. 1770, or Janet McAuley at Ext. 1773, Fax No. (805) 968-5038.

Sincerely,

Jeffrey Henderson

Jeffrey Henderson
Vice President, Quality

jmc

13

PS MEDICAL®

Questions? Contact FDA/CDRH/OCE/DID at CDRH-FOISTATUS@fda.hhs.gov or 301-796-8118

Records processed under FOIA Request 2013-6292; Released 10/17/14

Patient Line Stopcock

The patient line stopcock is regularly positioned as depicted in Fig 2.

When at "Off" position:

Fig 2.1: Catheter communicates with patient line stopcock and patient line stopcock injection site (or transducer adapter). This is the regular setting for system use.

Fig 2.2: Catheter communicates with the main system stopcock only. Catheter does not communicate with patient line stopcock injection site (or transducer adapter).

Fig 2.3: Catheter communicates with patient line stopcock (or transducer adapter). Catheter does not communicate with main system stopcock.

Fig 2.4: Catheter does not communicate with patient line stopcock (or transducer adapter), or main system stopcock.

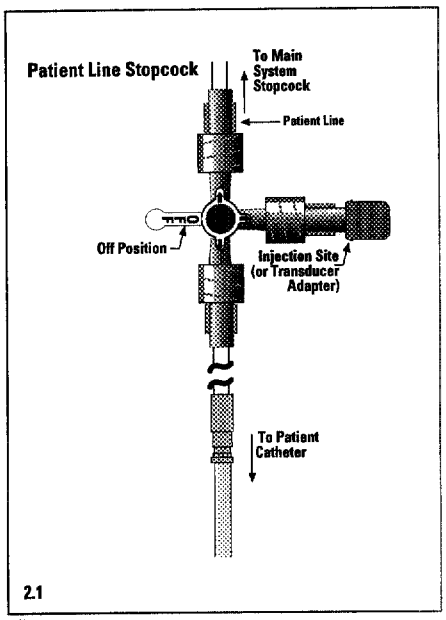

Fig 2.

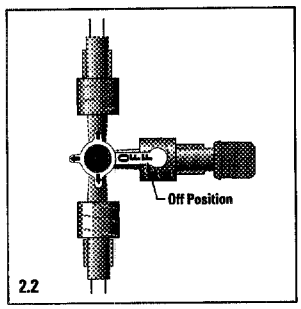

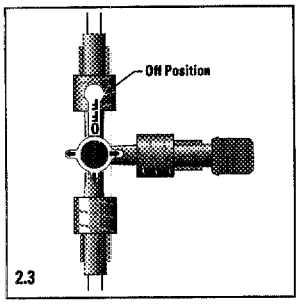

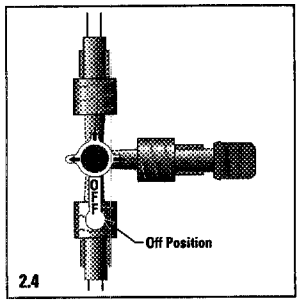

14

Questions? Contact FDA/CDRH/OCE/DID at CDRH-FOISTATUS@fda.hhs.gov or 301-796-8118

Records processed under FOIA Request 2013-6292; Released 10/17/14

K984053/A

Medtronic

Medtronic PS Medical
125 Cremona Drive
Goleta, CA 93117-5500 USA
Telephone: (805) 968-1546
Toll Free: (800) 826-5603
FAX: (805) 968-6889

FDA/CDRH/ODE/DMC
FEB 1 10 44 AM '99
RECEIVED

January 26, 1999

Food and Drug Administration
Center for Devices and Radiological Health
Document Mail Center (HFZ-401)
9200 Corporate Blvd.
Rockville, MD 20850

Re: 510(k) Amendment K984053- Becker External Drainage and Monitoring System

Dear Mr. Yen:

In response to your telephone conversation of January 22, 1999 with Janet McAuley, requesting further information on the Becker External Drainage and Monitoring System (EDMS), the attached information is provided.

If you have any questions or require additional information, please call me at (805) 968-1546 Ext. 1770, or Janet McAuley at Ext. 1773, Fax No. (805) 968-5038.

Sincerely,

Jeffrey Henderson

Jeffrey Henderson
Vice President, Quality

jmc

15

PS MEDICAL

Questions? Contact FDA/CDRH/OCE/DID at CDRH-FOISTATUS@fda.hhs.gov or 301-796-8118

Records processed under FOIA Request 2013-6292; Released 10/17/14

Question 1. Provide a rationale why the indications for use for the Becker system and the predicate system are not identical (the Codman system did not include monitoring). Or provide an additional predicate system that does include monitoring.

Response: The following products include monitoring as part of their Indications for Use:

Clinical Neuro Systems MoniTorr (K920156)
Intracranial Pressure Monitoring System (K802100)

Please note that although monitoring is not included in the Indications for Use of the Codman System, attaching monitoring equipment to the Codman System is outlined in the Instructions for Use (IFU) on page 50 of 123 of the original submission (page 6 of Codman's IFU) reference the attached copy on the following page.

Questions? Contact FDA/CDRH/OCE/DID at CDRH-FOISTATUS@fda.hhs.gov or 301-796-8118

Records processed under FOIA Request 2013-6292; Released 10/17/14

WARNING: Care must be taken to prevent wetting of the drip chamber sterile vent, since wetting may alter the pressure setting. If it is suspected that the vent has become wet, it is recommended that the tubing and drainage bag be changed immediately with an 82-1721 or components from an 82-1720.

PRECAUTION: It is recommended that the collection bag be suspended, rather than be allowed to lie on a surface during transport. Wetting of the vent by fluid inside the bag for a prolonged period of time may cause air entrapment. This will reduce the capacity of the bag.

3. Slide the drip chamber arrow to the appropriate pressure setting in mm HG or cm H_2O. Turn the black screw clockwise to secure. DO NOT OVERTIGHTEN THE SCREW.

NOTE: The pressure setting arrow corresponds to the fluid outlet at the antireflux valve within the drip chamber. The inlet tubing above the antireflux valve has no effect on the pressure setting because both sides of the tubing are equidistant to its peak from the pressure setting arrow. See Figure 6.

4. Rotate both stopcocks to the Drainage Only Position. See Figure 7.

5. Intracranial pressure monitoring lines (not supplied) attach to the tray stopcock at 0 or to the patient line stopcock.

NOTE: The design of the CODMAN External Drainage System II permits air to enter at the drip chamber sterile vent. This allows setting of the ICP by means of the drip chamber height and prevents suction or back pressure from the downstream line or collection bag from affecting the setting. It is normal to have air in the tubing downstream from the drip chamber.

6. Prime the system using sterile technique with sterile physiological saline solution. Flush through to drip chamber via the patient line LUER-LOK connector or patient stopcock monitoring port. Verify absence of leaks and free flow of fluid to drainage bag.

7. Remove the LUER-LOK cap from the female LUER-LOK connector of the distal end of the ventricular or lumbar catheter. Attach the connector to the patient line.

D. Using Pressure Monitoring Equipment
With ICP monitoring equipment connected to either monitoring port, ICP can be monitored with the stopcock in either of two positions, as detailed below.

1. ICP can be monitored by turning the selected stopcock so the middle leg points towards the catheter connection, as shown in Figure 8. This stops the flow of fluid to the collection bag and injection site. Fluid pressure will transmit only from the catheter to the monitoring port.

WARNING: With the stopcock in the Monitoring Only Position, fluid will not drain into the collection bag. The stopcock should not be left in this position if shunting is the primary function. Return the stopcock to the Drainage Only Position (Figure 7).

2. ICP can also be monitored while permitting fluid to drain into the collection bag. Turn the stopcock so the middle leg points toward the monitoring port, as shown in Figure 9.

WARNING: Monitoring ICP with the stopcock in the Monitoring/Drainage Position (Figure 9) may result in false ICP readings. Simultaneous drainage and transducer monitoring may result in waveform artifacts and artificially low ICP readings as described by Wilkinson.[5] Alternate ICP drainage and monitoring can be achieved by adjusting the stopcock to either the Drainage Only Position (Figure 7) for ICP drainage or the Monitoring Only Position (Figure 8) for ICP monitoring.

E. Injection and Sampling
1. With the middle leg of the patient stopcock pointing away from the monitoring port (Drainage Only Position, Figure 7) close the slide clamp immediately distal of the stopcock. (**NOTE:** Two slide clamps are provided if a double-clamping technique is utilized.)

2. Before puncturing the injection site, aseptically clean the site to prevent possible contamination. (**NOTE:** If desired, you can use a small syringe to remove air trapped in the line before performing the injection.)

3. Perform the injection, or sampling, as required. (**NOTE:** The capacity of the patient line and ventricular catheter, from the injection site to the proximal tip of the catheter, is approximately 1 cc.)

4. Reopen the clamp(s) after injection or sampling to resume drainage.

F. Flushing the System
To flush the system from the stopcock to the collection bag, turn the patient stopcock to the Off Position, so the middle leg points toward the injection site (Figure 10). Open all clamps. Inject flushing medium into injection site.

17

Questions? Contact FDA/CDRH/OCE/DID at CDRH-FOISTATUS@fda.hhs.gov or 301-796-8118 page 50 of 123

Records processed under FOIA Request 2013-6292; Released 10/17/14

Question 2. Provide a rationale or data relating to the monitoring indication, if it is clinically meaningful.

Response: Monitoring of the patient's intracranial pressure (ICP) is accomplished by connecting a pressure transducer to either the main system stopcock or the patient line stopcock. There is no clinical significance to using one site over the other it is merely physician preference and choice of where he/she wishes the monitoring equipment situated. External Drainage and Monitoring Systems provide a means to access and drain CSF. They do not provide a reading of ICP without the use of monitoring with a transducer. Monitoring is used to establish a measurement of ICP to determine if it is near a pathological or clinically significant level and might require further intervention.

Most often monitoring is used to provide the physician with reading of ICP over time to establish a record of patient's condition and progress. Most EDM Systems, Codman, Holter-Hausner, Clinical Neuro Systems provide instructions for the connection and use of monitoring equipment.

Questions? Contact FDA/CDRH/OCE/DID at CDRH-FOISTATUS@fda.hhs.gov or 301-796-8118

Records processed under FOIA Request 2013-6292; Released 10/17/14

Question 3. The predicate device has an anti-reflux valve on the drip chamber, the Becker EDMS has a valve on the drainage bag. Provide a rationale why this difference is not significant.

Response: The anti-reflux valve is provided on the drip chamber in the Becker system to allow the bag to be removed and replaced. The discarded bag may be removed and laid aside without the danger of fluid leakage from the bag. This provides for ease of use for the hospital staff and avoids the danger of fluid leakage and contamination concerns.

There is no clinical requirement for placement of the anti-reflux valve on an EDM System as the design of the system is for it to be set up and used in an upright position at all times. The Codman system places the anti-reflux valve on the drip chamber, this may be due to the fact that although replacement drainage bags are available Codman has the system set up for replacement of the entire drip chamber/ drainage bag assembly. The Drip chamber, tubing and drainage bag as a unit are designed for removal and replacement ref. page 51 of 123 of the original submission (page 7 of Codman's IFU) reference the copy on the following page. In the event of replacement of the drip chamber assembly the anti-reflux valve may be better placed on the drip chamber to avoid the danger of fluid leakage if the assembly were removed and laid flat during replacement of the component.

Questions? Contact FDA/CDRH/OCE/DID at CDRH-FOISTATUS@fda.hhs.gov or 301-796-8118

Records processed under FOIA Request 2013-6292; Released 10/17/14

WARNING: When flushing is completed, return the stopcock to the Drainage Only Position (Figure 7).

G. Replacing the CODMAN External Drainage System II Collection Bag and Tubing Set (catalog no. 82-1721).
Observe sterile technique during replacement of the collection bag and tubing set.

1. Occlude the ventricular catheter with shod forceps.

2. Turn either stopcock to the Off Position (Figure 10).

3. Disconnect the LUER-LOK between the catheter and the patient line with a twisting counterclockwise motion. Discard the old tubing, drip chamber, and collection bag.

4. Install the new collection bag and tubing set.

H. Replacing the CODMAN External Drainage System II Collection Bag (catalog no. 82-1722)
Observe sterile technique during replacement of the collection bag. Refer to the instructions accompanying the replacement bag.

NOTE: A latex injection and sampling site is located at the bottom of the collection bag. To allow drainage from the collection bag, remove this site by cutting below the clamp using sterile technique.

I. Determining the Drainage Rate
1. Measure the fluid in the bag after a predetermined amount of time has elapsed.

2. Calculate the drainage rate by dividing the volume collected by the time elapsed.

Alternate Method
To determine the drainage rate when drainage volume is small (75 cc or less), follow the procedure outlined below.

1. Clamp the drainage tubing 2 cm below the drip chamber.

2. After a predetermined amount of time has elapsed, measure the fluid accumulation in the drip chamber in milliliters. Do not allow the drip chamber to fill completely, since this could allow wetting and blockage of the sterile vent. NOTE: The amount of fluid in the base of the drip chamber and the 2 cms of clamped tubing (.5 cc) should not be included in this measurement.

3. Calculate the drainage rate by dividing the volume collected by the time elapsed.

4. Unclamp the tubing below the drip chamber to continue drainage.

WARNING: Care should be taken not to raise or lower the drip chamber when calculating the drainage rate.

References

1. Ingraham FD and Campbell JB: An apparatus for closed drainage of the ventricular system. Ann Surg 114: 1096-1098, 1941.

2. Bering EA: A simplified apparatus for constant ventricular drainage. J Neurosurg 8: 450-452, 1951.

3. White RJ, Dakters J, Young H, et al: Continuous control of CSF volume and pressure with an externalized valve-drainage system. Trans Am Soc Artif Intern Organs 13: 332-333, 1967.

4. White RK, Dakters, JG, et al: Temporary control of cerebrospinal fluid volume and pressure by means of an externalized valve-drainage system. J Neurosurg 30: 264-269, 1969.

5. Wilkinson, HA, Yazebski, J, Wilkinson, EC, and Anderson, FA: Erroneous measurement of ICP caused by simultaneous ventricular drainage: a hydrodynamic model study. Neurosurgery, Vol. 24, No. 3: 348-354, 1989.

Warranty
Johnson & Johnson Professional, Inc., warrants that this medical device is free from defects in both materials and workmanship. THE ABOVE WARRANTIES ARE IN LIEU OF ALL OTHER WARRANTIES EITHER EXPRESS OR IMPLIED, INCLUDING ANY WARRANTY OF MERCHANTABILITY OR FITNESS FOR A PARTICULAR PURPOSE. Suitability for use of the medical device for any surgical procedure shall be determined by the user. Johnson & Johnson Professional shall not be liable for incidental or consequential damages of any kind.

® CODMAN is a registered trademark of Johnson & Johnson Professional, Inc.

® LUER-LOK is a registered trademark of Becton, Dickinson, and Co.

® CORD-LOC is a registered trademark of ITW Nexus

20

Questions? Contact FDA/CDRH/OCE/DID at CDRH-FOISTATUS@fda.hhs.gov or 301-796-8118

Records processed under FOIA Request 2013-6292; Released 10/17/14

Question 4. The IFU appears to provide instructions concerning the use of the Patient line stopcock and the main stopcock. Provide a rationale for the reviewer on the description of stopcock use and look into modifying the labeling if there is a discrepancy that might have a safety issue.

Response: The stopcocks are clearly indicated with "OFF" and arrows to indicate which segment is closed to (Off) to fluid flow and which is open to fluid flow (arrows). This clearly provides visual confirmation for the user. Any perceived inconsistencies in descriptions are related to the fact that there are multiple configurations for the stopcock and also to the natural differences related to the orientation of the stopcock on the system.

The table below provides the directions outlined in labeling. The Table lists the same four stopcock configurations, their order is not a discrepancy but due to there position on the system and orientation to the drainage line.

Figures 2.1 and 3.1 have the same indications
Figures 2.2 and 3.3 have the same indications
Figure 2.3 and 3.4 have the same indications
Figure 2.4 and 3.2 have the same indications

Table

fig. 2.1 shows the orientation of the stopcock for fluid flow to the patient line transducer and the main EDMS system (arrows point toward the system, the injection site/transducer and the catheter).	fig. 3.1 shows the orientation of the stopcock for fluid flow to the main system transducer site and the main EDMS system (arrows point toward the system, the transducer site and the catheter/patient line stopcock).
fig. 2.2 shows the orientation of the stopcock for fluid flow to the main EDMS system only (arrows point to the catheter and system but the Off is toward the injection site/transducer).	fig. 3.2 shows the orientation of the stopcock for fluid flow to the main system transducer only (arrows point to the transducer and the catheter/patient line stopcock the Off is toward the system).
fig. 2.3 shows orientation of the stopcock for no flow to the transducer or the main EDMS system (the arrows point to the system and the injection site transducer but the Off is toward the catheter)	fig. 3.3 shows orientation of the stopcock for fluid flow to the main EDMS system only (the arrows point to the system and the catheter/patient line stopcock but the Off is toward the transducer)
fig. 2.4 shows orientation of the stopcock for fluid flow to the injection site only (the arrows point to the injection site transducer and the catheter but the Off is toward the system).	fig. 3.4 shows orientation of the stopcock for no flow to the injection site or main EDMS system (the arrows point to the transducer and the system but the Off is toward the catheter/patient line stopcock).

Questions? Contact FDA/CDRH/OCE/DID at CDRH-FOISTATUS@fda.hhs.gov or 301-796-8118

Records processed under FOIA Request 2013-6292; Released 10/17/14

The figure on page 26 of 123 of the original submission is a representation of the entire Becker EDMS system. The figure on page 28 of 123 of the original submission is a magnified representation of the patient line stopcock. The figure on page 26 identifies the stopcock and the patient line stopcock injection site (optional transducer adapter location). This notation is for descriptive purposes to differentiate between the patient line stopcock introducer and the main system stopcock introducer on the overall system drawing. These same terms are not used in the magnified stopcock drawings as the site is specified at the top of the main figure drawing. The rest of the stopcock drawings are representations of stopcock positions for visual reference. This is clearly stated in the figure descriptions

Questions? Contact FDA/CDRH/OCE/DID at CDRH-FOISTATUS@fda.hhs.gov or 301-796-8118

Records processed under FOIA Request 2013-6292; Released 10/17/14

DEPARTMENT OF HEALTH AND HUMAN SERVICES

Public Health Service

Food and Drug Administration
Center for Devices and
Radiological Health
Office of Device Evaluation
Document Mail Center (HFZ-401)
9200 Corporate Blvd.
Rockville, Maryland 20850

November 13, 1998

MEDTRONIC PS MEDICAL
125 CREMONA DR.
GOLETA, CA 93117
ATTN: JEFFREY HENDERSON

510(k) Number: K984053
Received: 06-NOV-1998
Product: BECKER EXTERNAL DRAINAGE AND MONITORING SYSTEM

The Center for Devices and Radiological Health (CDRH), Office of Device Evaluation (ODE), has received the Premarket Notification you submitted in accordance with Section 510(k) of the Federal Food, Drug, and Cosmetic Act (Act) for the above referenced product. We have assigned your submission a unique 510(k) number that is cited above. Please refer prominently to this 510(k) number in any future correspondence that relates to this submission. We will notify you when the processing of your premarket notification has been completed or if any additional information is required. YOU MAY NOT PLACE THIS DEVICE INTO COMMERCIAL DISTRIBUTION UNTIL YOU RECEIVE A LETTER FROM FDA ALLOWING YOU TO DO SO.

On January 1, 1996, FDA began requiring that all 510(k) submitters provide on a separate page and clearly marked "Indication For Use" the indication for use of their device. If you have not included this information on a separate page in your submission, please complete the attached and amend your 510(k) as soon as possible. Also if you have not included your 510(k) Summary or 510(k) Statement, or your Truthful and Accurate Statement, please do so as soon as possible. There may be other regulations or requirements affecting your device such as Postmarket Surveillance (Section 522(a)(1) of the Act) and the Device Tracking regulation (21 CFR Part 821). Please contact the Division of Small Manufacturers Assistance (DSMA) at the telephone or web site below for more information.

Please remember that all correspondence concerning your submission MUST be sent to the Document Mail Center (HFZ-401) at the above letterhead address. Correspondence sent to any address other than the Document Mail Center will not be considered as part of your official premarket notification submission. Because of equipment and personnel limitations, we cannot accept telefaxed material as part of your official premarket notification submission, unless specifically requested of you by an FDA official. Any telefaxed material must be followed by a hard copy to the Document Mail Center (HFZ-401).

You should be familiar with the manual entitled, "Premarket Notification 510(k) Regulatory Requirements for Medical Devices" available from DSMA. If you have other procedural or policy questions, or want information on how to check on the status of your submission (after 90 days from the receipt date), please contact DSMA at (301) 443-6597 or its toll-free number (800) 638-2041, or at their Internet address http://www.fda.gov/cdrh/dsmamain.html or me at (301) 594-1190.

Sincerely yours,

Marjorie Shulman
Consumer Safety Officer
Premarket Notification Staff
Office of Device Evaluation

Questions? Contact FDA/CDRH/OCE/DID at CDRH-FOISTATUS@fda.hhs.gov or 301-796-8118

Records processed under FOIA Request 2013-6292; Released 10/17/14

REVISED:3/14/95

THE 510(K) DOCUMENTATION FORMS ARE AVAILABLE ON THE LAN UNDER 510(K) BOILERPLATES TITLED "DOCUMENTATION" AND MUST BE FILLED OUT WITH EVERY FINAL DECISION (SE, NSE, NOT A DEVICE, ETC.).

"SUBSTANTIAL EQUIVALENCE" (SE) DECISION MAKING DOCUMENTATION

K_____

Reviewer:_____

Division/Branch:_____

Device Name:_____

Product To Which Compared (510(K) Number If Known):_____

	YES	NO	
1. Is Product A Device			If **NO** = Stop
2. Is Device Subject To 510(k)?			If **NO** = Stop
3. Same Indication Statement?			If **YES** = Go To 5
4. Do Differences Alter The Effect Or Raise New Issues of Safety Or Effectiveness?			If **YES** = Stop **NE**
5. Same Technological Characteristics?			If **YES** = Go To 7
6. Could The New Characteristics Affect Safety Or Effectiveness?			If **YES** = Go To 8
7. Descriptive Characteristics Precise Enough?			If **NO** = Go To 10 If **YES** = Stop **SE**
8. New Types Of Safety Or Effectiveness Questions?			If **YES** = Stop **NE**
9. Accepted Scientific Methods Exist?			If **NO** = Stop **NE**
10. Performance Data Available?			If **NO** = Request Data
11. Data Demonstrate Equivalence?			Final Decision:

Note: In addition to completing the form on the LAN, "yes" responses to questions 4, 6, 8, and 11, and every "no" response requires an explanation.

Questions? Contact FDA/CDRH/OCE/DID at CDRH-FOISTATUS@fda.hhs.gov or 301-796-8118

Records processed under FOIA Request 2013-6292; Released 10/17/14

1. Intended Use:

2. Device Description: Provide a statement of how the device is either similar to and/or different from other marketed devices, plus data (if necessary) to support the statement. Is the device life-supporting or life sustaining? Is the device implanted (short-term or long-term)? Does the device design use software? Is the device sterile? Is the device for single use? Is the device for home use or prescription use? Does the device contain drug or biological product as a component? Is this device a kit? Provide a summary about the devices design, materials, physical properties and toxicology profile if important.

EXPLANATIONS TO "YES" AND "NO" ANSWERS TO QUESTIONS ON PAGE 1 AS NEEDED

1. Explain why not a device:

2. Explain why not subject to 510(k):

3. How does the new indication differ from the predicate device's indication:

4. Explain why there is or is not a new effect or safety or effectiveness issue:

5. Describe the new technological characteristics:

6. Explain how new characteristics could or could not affect safety or effectiveness:

7. Explain how descriptive characteristics are not precise enough:

8. Explain new types of safety or effectiveness questions raised or why the questions are not new:

9. Explain why existing scientific methods can not be used:

10. Explain what performance data is needed:

11. Explain how the performance data demonstrates that the device is or is not substantially equivalent:

ATTACH ADDITIONAL SUPPORTING INFORMATION

Questions? Contact FDA/CDRH/OCE/DID at CDRH-FOISTATUS@fda.hhs.gov or 301-796-8118

Records processed under FOIA Request 2013-6292; Released 10/17/14

Screening Checklist
For all Premarket Notification 510(k) Submissions

Device Name:	K
Submitter (Company):	

Items which should be included (circle missing & needed information)	SPECIAL YES	SPECIAL NO	ABBREVIATED YES	ABBREVIATED NO	TRADITIONAL YES	TRADITIONAL NO	✓ IF ITEM IS NEEDED AND IS MISSING
1. Cover Letter clearly identifies Submission as: a) "Special 510(k): Device Modification" b) "Abbreviated 510(k)" c) Traditional 510(k)	GO TO # 2,4		GO TO # 3,4,5		GO TO #2 4,5		
2. GENERAL INFORMATION: REQUIRED IN ALL 510(K) SUBMISSIONS	SPECIALS YES	SPECIALS NO	ABBREVIATED YES	ABBREVIATED NO	TRADITIONAL YES	TRADITIONAL NO	✓ IF ITEM IS NEEDED AND IS MISSING
a) trade name, classification name, establishment registration number, device class							
b) OR a statement that the device is not yet classified	FDA - may be a classification request; see coordinator						
c) identification of legally marketed equivalent device	NA						
d) compliance with Section 514 - performance standards	NA						
e) address of manufacturer							
f) Truthful and Accurate Statement							
g) Indications for Use enclosure							
h) SMDA Summary or Statement *(FOR ALL DEVICE CLASSES)*							
i) Class III Certification & Summary *(FOR ALL CLASS III DEVICES)*							
j) Description of device (or modification) including diagrams, engineering drawings, photographs, service manuals							
k) Proposed Labeling:							
i) package labeling (user info)							
ii) statement of intended use							
iii) advertisements or promotional materials							
i) MRI compatibility (if claimed)							
l) Comparison Information (similarities and differences) to named legally marketed equivalent device (table preferred) should include:							
i) Labeling							
ii) intended use							
iii) physical characteristics							
iv) anatomical sites of use							
v) performance (bench, animal, clinical) testing	NA						
vi) safety characteristics	NA						
m) If kit, kit certification							
3. "SPECIALS" - ONLY FOR MODIFICATIONS TO MANUFACTURER'S OWN CLASS II , III OR RESERVED CLASS I DEVICE							
a) Name & 510(k) number of legally marketed (unmodified) predicate device							
b) ***STATEMENT - INTENDED USE AND INDICATIONS FOR USE OF MODIFIED DEVICE AS DESCRIBED IN ITS***			* If no - STOP not a special				

Questions? Contact FDA/CDRH/OCE/DID at CDRH-FOISTATUS@fda.hhs.gov or 301-796-8118

26

Records processed under FOIA Request 2013-6292; Released 10/17/14

LABELING HAVE NOT CHANGED*				
c) ***STATEMENT - FUNDAMENTAL SCIENTIFIC TECHNOLOGY OF THE MODIFIED DEVICE HAS NOT CHANGED****			* If no - STOP not a special	
d) Design Control Activities Summary				
i) Identification of Risk Analysis method(s) used to assess the impact of the modification on the device and its components, and the results of the analysis				
ii) Based on the Risk Analysis, an identification of the verification and/or validation activities required, including methods or tests used and acceptance criteria to be applied				
iii) A declaration of conformity with design controls. The declaration of conformity should include:				
1) A statement signed by the individual responsible, that, as required by the risk analysis, all verification and validation activities were performed by the designated individual(s) and the results demonstrated that the predetermined acceptance criteria were met				
2) A statement signed by the individual responsible, that manufacturing facility is in conformance with design control procedure Requirements as specified in 21 CFR 820.30 and the records are available for review.				

	SPECIALS		ABBREVIATED		TRADITIONAL		✓ IF ITEM IS NEEDED AND IS MISSING
	YES	NO	YES	NO	YES	NO	
4. ABBREVIATED 510(K): SPECIAL CONTROLS/CONFORMANCE TO RECOGNIZED STANDARDS							
a) For a submission, which relies on a guidance document and/or special control(s), a summary report that describes how the guidance and/or special control(s) was used to address the risks associated with the particular device type							
b) If a manufacturer elects to use an alternate approach to address a particular risk, sufficient detail should be provided to justify that approach.							
c) For a submission, which relies on a recognized standard, a declaration of conformity to the standard. The declaration should include the following:							
i) An identification of the applicable recognized consensus standards that were met							
ii) A specification, for each consensus standard, that all requirements were met, except for inapplicable requirements or deviations noted below							

Questions? Contact FDA/CDRH/OCE/DID at CDRH-FOISTATUS@fda.hhs.gov or 301-796-8118

iii) An identification, for each consensus standard, of any way(s) in which the standard may have been adapted for application to the device under review, e.g., an identification of an alternative series of tests that were performed					
iv) An identification, for each consensus standard, of any requirements that were not applicable to the device					
v) A specification of any deviations from each applicable standard that were applied					
vi) A specification of the differences that may exist, if any, between the tested device and the device to be marketed and a justification of the test results in these areas of difference					
vii) Name/address of test laboratory/certification body involved in determining the conformance of the device with applicable consensus standards and a reference to any accreditations for those organizations					
d) Data/information to address issues not covered by guidance documents, special controls, and/or recognized standards					

5. Additional Considerations: (may be covered by Design Controls)							
a) Biocompatibility data for all patient-contacting materials, OR certification of identical material/formulation:							
i) component & material							
ii) identify patient-contacting materials							
iii) biocompatibility of final sterilized product							
b) Sterilization and expiration dating information:							
i) sterilization method							
ii) SAL							
iii) packaging							
iv) specify pyrogen free							
v) ETO residues							
vi) radiation dose							
c) Software validation & verification:							
i) hazard analysis							
ii) level of concern							
iii) development documentation							
iv) certification							

Items shaded under "NO" are necessary for that type of submission. Circled items and items with checks in the "Needed & Missing" column must be submitted before acceptance of the document.

Passed Screening _____Yes_____No **Reviewer:_____**
Date:_____ **Concurrence by Review Branch:_____**

Records processed under FOIA Request 2013-6292; Released 10/17/14

K972559/A1

Medtronic

Medtronic PS Medical
125 Cremona Drive
Goleta, CA 93117-5500 USA
Telephone: (805) 968-1546
Toll Free: (800) 826-5603
FAX: (805) 968-6889

K984053

November 3, 1998

RECEIVED
NOV 09 1998
FDA/CDRH/OCE/DMC

Food and Drug Administration
Center for Devices and Radiological Health
Document Mail Center (HFZ-401)
9200 Corporate Blvd.
Rockville, MD 20850

Re: K972559, Becker External Drainage and Monitoring System

Dear Sir or Madam:

In response to your letter dated September 19, 1997 requesting further information on the Becker External Drainage and Monitoring System (EDMS), we are providing the following attached response.

If you have any questions or require additional information, please call me at (805) 968-1546 Ext. 1770, or Janet McAuley at Ext. 1773, Fax No. (805) 968-5038.

Sincerely,

Jeffrey Henderson
Vice President, Quality

jmc

GK-26

PS MEDICAL

Questions? Contact FDA/CDRH/OCE/DID at CDRH-FOISTATUS@fda.hhs.gov or 301-796-8118

(b)(4) testing

Question 2: Please describe what testing was performed to establish the five year shelf life.

(b)(4)

(b)(4)

Records processed under FOIA Request 2013-6292; Released 10/17/14

Question 3: You have not provided adequate assurance that the materials used in this device will not pose a risk to patients. In order to state that none of the components of the device are patient-contacting, it is necessary to establish that retrograde flow of CSF is not possible. There appears to be an anti-reflux valve located at the top of the drainage bag; however this position of the valve would not preclude retrograde flow from points more proximal (along the patient connection line, for example). Please clarify what characteristics of the device design assure that retrograde fluid flow is not possible.

(b)(4)

[redacted]

Please note, the materials used to fabricate the predicate Codman External Drainage System are not substantially different from those used to fabricate the Medtronic PS Medical Becker EDMS System.

Records processed under FOIA Request 2013-6292; Released 10/17/14

ATTACHMENT A

Questions? Contact FDA/CDRH/OCE/DID at CDRH-FOISTATUS@fda.hhs.gov or 301-796-8118

Records processed under FOIA Request 2013-6292; Released 10/17/14

PROCESS VALIDATION PROTOCOL

(b)(4)

[redacted]

SCOPE

(b)(4)

[redacted]

OBJECTIVE

(b)(4)

[redacted]

ACCEPTANCE CRITERIA

(b)(4)

[redacted]

TEST METHODOLOGY

(b)(4)

[redacted]

Questions? Contact FDA/CDRH/OCE/DID at CDRH-FOISTATUS@fda.hhs.gov or 301-796-8118

Records processed under FOIA Request 2013-6292; Released 10/17/14

PROCESS VALIDATION PROTOCOL

(b)(4)

(b)(4)

[redacted]

FINISHED PRODUCTS DESCRIPTION

(b)(4)

[redacted]

Questions? Contact FDA/CDRH/OCE/DID at CDRH-FOISTATUS@fda.hhs.gov or 301-796-8118

Records processed under FOIA Request 2013-6292; Released 10/17/14

PROCESS VALIDATION PROTOCOL

(b)(4)

[redacted]

1.0 PROCESS DESCRIPTION: (b)(4) [redacted]

2.0 INSTALLATION DESCRIPTION: (b)(4) [redacted]

3.0 PROCESS INPUT DESCRIPTION: (b)(4) [redacted]

4.0 PROCESS OUTPUT DESCRIPTION

(b)(4)

[redacted]

5.0 PROCESS VALIDATION PROTOCOL

(b)(4)

[redacted]

Questions? Contact FDA/CDRH/OCE/DID at CDRH-FOISTATUS@fda.hhs.gov or 301-796-8118

Records processed under FOIA Request 2013-6292; Released 10/17/14

PROCESS VALIDATION PROTOCOL

(b)(4)

(b)(4)

[redacted]

Questions? Contact FDA/CDRH/OCE/DID at CDRH-FOISTATUS@fda.hhs.gov or 301-796-8118

Records processed under FOIA Request 2013-6292; Released 10/17/14

ATTACHMENT B

Records processed under FOIA Request 2013-6292; Released 10/17/14

Description

The Becker External Drainage and Monitoring System (Becker EDMS) provides the physician with a complete closed system for:

1. Draining cerebrospinal fluid (CSF) from the lateral ventricles of the brain or the lumbar subarachnoid space.
2. Monitoring CSF pressure and flow rate from the lateral ventricles of the brain and the lumbar subarachnoid space.

The Becker EDMS (Fig 1) consists of a nondistensible blue striped (proximal end) patient connection line, patient line stopcock, mounting panel/main system section, two latex-free injection sites and a removable drainage bag with approximate volumetric graduations and microbial filter.

The main system section located on the mounting panel includes:

1. Mounting bracket for height adjustment of system
2. Optional self-adjusting cord with lock for adjustment of system height
3. Main system stopcock with optional transducer attachment location
4. Sliding, graduated, 50 cc flow chamber with drip former and conical bottom, and locking bracket
5. Two drainage line slide clamps for flow monitoring and sampling
6. Small filter vent slide clamp
7. Drainage bag connection line
8. Instructions for use

Indications

Draining and monitoring of CSF flow from the lateral ventricles or lumbar subarachnoid space is indicated in selected patients to:

1. Reduce intracranial pressure (ICP), e.g., pre-, intra- or postoperative;
2. Monitor CSF chemistry, cytology and physiology.
3. Provide temporary CSF drainage in patients with infected cerebrospinal fluid shunts.

Monitoring of intracranial pressure (ICP) is indicated in selected patients with:

1. Severe head injury
2. Subarachnoid hemorrhage graded III, IV or V preoperatively
3. Reyes syndrome or similar encephalopathies
4. Hydrocephalus
5. Intracranial hemorrhage
6. Miscellaneous problems when drainage is to be used as a therapeutic maneuver.

Monitoring can also be used to evaluate the status pre- and postoperatively for space-occupying lesions.

Instructions for Use

Prior to use of the Becker EDMS , it is necessary for the attending physician and other responsible personnel to familiarize themselves with the use and function of the various components of the system. The following guidelines have been prepared by Dr. Donald P. Becker* and his staff.

System Set-Up

The system should be prepared under sterile conditions at least 30 minutes prior to placement of the ventricular catheter or lumbar catheter. The system should be removed from the opened pouch by an attendant wearing a surgical face mask and sterile gloves. Check to ensure that all components are assembled.

CAUTION: CHECK ALL CONNECTIONS TO ENSURE THAT FITTINGS ARE TIGHT AND LEAK-FREE.

A pressure transducer adapter may be attached on the patient line stopcock or on the main system stopcock. See Figures 2 and 3. If electronic pressure monitoring equipment is to be used, attach transducer to transducer adapter located on patient line or main system stopcock.

NOTE: Transducer adapters and transducers are not included with this system.

To attach a pressure transducer adapter at the main system stopcock, remove red end plug. The plug may then be used to cap a secondary inlet on the transducer adapter if necessary. To attach a transducer adapter at the patient line stopcock, remove injection site cap.

The system mounting panel incorporates a hanger hole and braided cord with lock for I.V. pole suspension and a panel bracket for manifold pole clamp mounting if more rigid mounting is desired. Locate the system mounting panel so that the main system stopcock is level with the patient's foramen of Monro or at the level of the exit of the lumbar catheter. Ensure that panel is properly aligned. The pressure head scales found on the panel label are referenced to zero at the main system stopcock. The main system stopcock must be correctly aligned with the patient for accurate pressure monitoring.

*This product was developed in cooperation with Donald P. Becker, M.D., Department of Surgery, Division of Neurosurgery, University of California, Los Angeles School of Medicine, Los Angeles, CA 90024.

Records processed under FOIA Request 2013-6292; Released 10/17/14

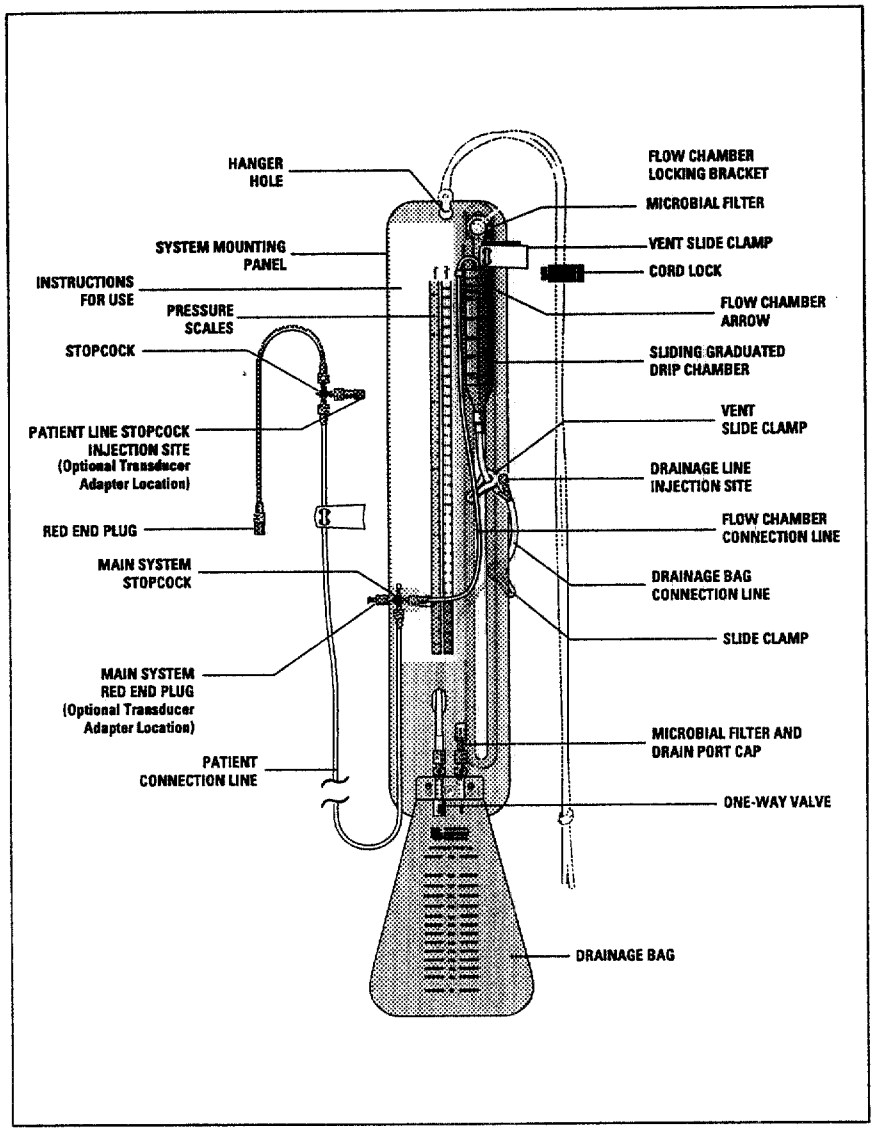

Fig 1.

Questions? Contact FDA/CDRH/OCE/DID at CDRH-FOISTATUS@fda.hhs.gov or 301-796-8118

Records processed under FOIA Request 2013-6292; Released 10/17/14

Patient Line Stopcock

The patient line stopcock is regularly positioned as depicted in Fig 2.

When at "Off" position:

Fig 2.1: Catheter communicates with patient line stopcock and patient line stopcock injection site (or transducer adapter). This is the regular setting for system use.

Fig 2.2: Catheter communicates with the main system stopcock only. Catheter does not communicate with patient line stopcock injection site (or transducer adapter).

Fig 2.3: Catheter communicates with patient line stopcock (or transducer adapter). Catheter does not communicate with main system stopcock.

Fig 2.4: Catheter does not communicate with patient line stopcock (or transducer adapter), or main system stopcock.

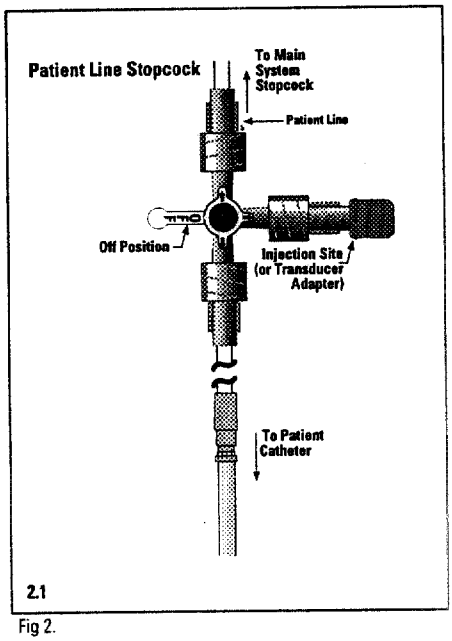

Fig 2.

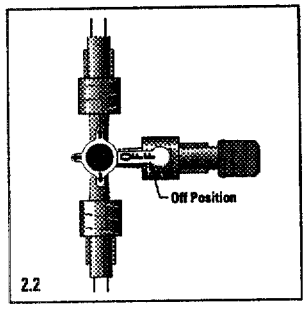

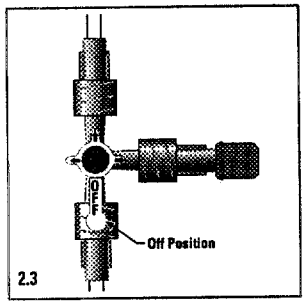

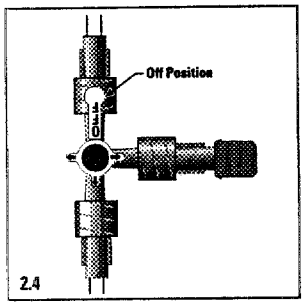

Questions? Contact FDA/CDRH/OCE/DID at CDRH-FOISTATUS@fda.hhs.gov or 301-796-8118

Records processed under FOIA Request 2013-6292; Released 10/17/14

Main System Stopcock

The main system stopcock may be positioned as depicted in Fig 3.

When at "Off" position:

Fig 3.1: Patient line communicates with transducer adapter (if connected) and flow chamber. This is the regular setting for system use (drainage).

Fig 3.2: Patient line communicates with transducer adapter (if connected) only. Patient line does not communicate with flow chamber.

Fig 3.3: Patient line communicates with flow chamber only. Patient line does not communicate with transducer adapter.

Fig 3.4: Patient line does not communicate with main system stopcock. Patient line does not communicate with flow chamber.

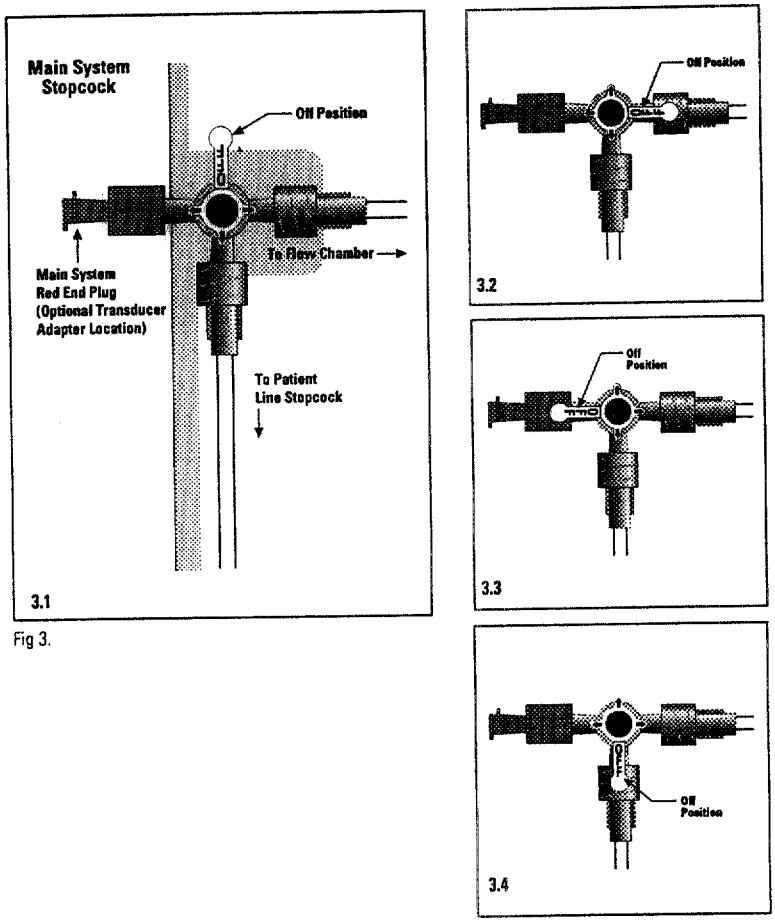

Fig 3.

Questions? Contact FDA/CDRH/OCE/DID at CDRH-FOISTATUS@fda.hhs.gov or 301-796-8118

Records processed under FOIA Request 2013-6292; Released 10/17/14

Flow Chamber Slide Clamp

The flow chamber will communicate with the drainage bag when both slide clamps are open or loosely positioned. This position is illustrated in Fig 4.1.

The flow chamber will not communicate with the drainage bag when either slide clamp is closed or positioned to compress and securely occlude the drainage bag connection line (Figures 4.2 and 4.3). The slide clamp position shown in Fig 4.2 is used to sample CSF from the flow chamber. The slide clamp position shown in Fig 4.3 is used to monitor the flow rate in the graduated chamber.

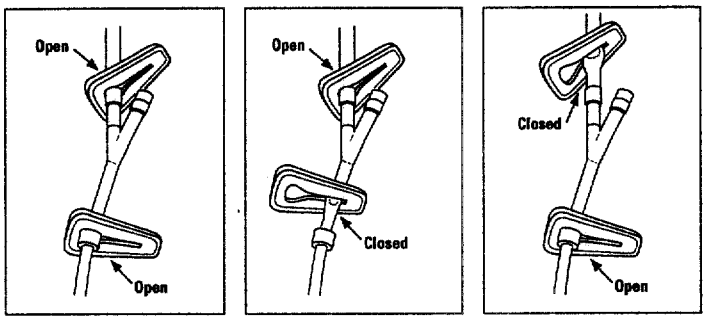

Fig 4.

To Calibrate System

To calibrate the transducer, follow the instructions of the transducer manufacturer.

Initial system calibration should be done prior to connecting system to patient.

The system provides several ways to perform the calibration. The transducer located on the patient line stopcock, or on main system stopcock, may be referenced to atmospheric pressure through the microbial filter on the flow chamber. This can be done to zero the transducer.

The flow chamber connection line may be used as a manometer tube. The transducer is then referenced to the saline solution filled connection line. The saline solution in the connection line can be maintained at a constant height and provides a readily accessible standard pressure against which to calibrate the transducer.

To set the pressure, align the flow chamber inlet tube with the desired pressure setting on the cm H_2O or mm Hg scale. The scale is located on the system mounting panel adjacent to the flow chamber slide. A pressure setting of 27.2 cm H_2O or 20 mm Hg is recommended for transducer calibration.

To Drain CSF

Open patient line stopcock and main system stopcock to allow fluid to flow from the drainage catheter to the flow chamber. Open the proximal drainage line slide clamp and the distal drainage line slide clamp to allow fluid to flow from the flow chamber to the drainage bag.

CAUTION: THE SMALL FILTER VENT SLIDE CLAMP MUST BE OPEN TO PERMIT DRAINAGE OF CSF.

The amount and rate of drainage will be partially dependent on the system pressure head setting (the height of the flow chamber arrow relative to the main system stopcock zero level).

CAUTION: DURING SYSTEM USE WITH THE FLOW CHAMBER SLIDE CLAMP(S) OPEN TO ALLOW FLOW INTO THE DRAINAGE BAG, FLUID MAY ACCUMULATE IN THE FLOW CHAMBER BEFORE EMPTYING. FLOW MUST BE CAREFULLY MONITORED TO PREVENT COMPLETE FILLING OF THE FLOW CHAMBER. IT MAY BE NECESSARY TO MANIPULATE THE DRAINAGE BAG CONNECTION LINE TO RE-ESTABLISH DRAINAGE FROM THE FLOW CHAMBER TO THE DRAINAGE BAG. COMPLETE FILLING OF THE FLOW CHAMBER WILL PRECLUDE DRAINAGE OF CSF DUE TO WETTING OF FILTER VENT.

Questions? Contact FDA/CDRH/OCE/DID at CDRH-FOISTATUS@fda.hhs.gov or 301-796-8118

Records processed under FOIA Request 2013-6292; Released 10/17/14

Irrigation, CSF Sampling and Intraventricular Medication

The system's latex-free injection sites can be used for several purposes. A 25-gauge needle can be inserted through an injection site which has been cleaned and disinfected with alcohol. A clogged ventricular catheter may then be irrigated with 0.1 mL of sterile saline. Similarly, the injection site can be used to withdraw a sample of CSF for laboratory analysis or to inject intraventricular medication.

Volume/Pressure Relationship

A volume/pressure relationship (VPR) can be obtained with the system using the technique described by Miller et al. (32, 33, 34, 35), and Marmarou and Shulman (25). Fill a 1.0 mL syringe with an attached 25-gauge needle with sterile isotonic saline and insert the needle through patient line injection site. Physicians desiring to conduct these studies should be familiar with the techniques as described by Miller et al., and by Marmarou and Shulman.

Moving an EDMS Patient

If it is desired to move a patient who is undergoing external drainage and/or monitoring with a Medtronic PS Medical Becker EDMS, the system should be kept upright and correctly aligned with the patient. If it is not possible for the system to be moved in an upright manner, the following steps must be performed:

1. Ensure that the flow chamber has completely drained.
2. Isolate patient from communication with the flow chamber by:
   a. Adjusting the patient line stopcock to "Off" (Fig 2.3 or 2.4)
   b. Adjusting main system stopcock to "Off" (Fig 3.4)
3. Close small filter vent slide clamp.
4. Move patient and system as required.
5. Realign and readjust system and stopcocks to initiate drainage when patient reaches new location.

CAUTION: ALL STOPCOCKS AND SLIDE CLAMPS ADJUSTED FOR PATIENT TRANSPORT MUST BE RETURNED TO THEIR NORMAL POSITION TO RE-ESTABLISHED PROPER FLOW AND DRAINAGE OF CSF. FAILURE TO PROPERLY RE-ADJUST THE STOPCOCKS AND SLIDE CLAMPS COULD RESULT IN UNDER- OR OVERDRAINAGE OF CSF.

CAUTION: FAILURE TO PERFORM STEPS 1-5 ABOVE, MAY RESULT IN IMPROPER VENTING BY FLOW CHAMBER MICROBIAL FILTER WHEN DRAINAGE IS RE-ESTABLISHED.

Questions? Contact FDA/CDRH/OCE/DID at CDRH-FOISTATUS@fda.hhs.gov or 301-796-8118

Records processed under FOIA Request 2013-6292; Released 10/17/14

DEPARTMENT OF HEALTH AND HUMAN SERVICES

Public Health Service

Food and Drug Administration
Center for Devices and
Radiological Health
Office of Device Evaluation
Document Mail Center (HFZ-401)
9200 Corporate Blvd.
Rockville, Maryland 20850

December 18, 1997

MEDTRONIC PS MEDICAL
125 CREMONA DR.,
UNIVERSITY BUSINESS CENTER
GOLETA, CA 93117
ATTN: RICHARD M. RUEDY

510(k) Number: K972559
Product: MEDTRONIC PS MEDICAL BECKER EXTERNAL DRAINAGE AND

Extended Until: 19-JAN-98

Based on your recent request, an extension of time has been granted for you to submit the additional information we requested.

If the additional information is not received by the "Extended Until" date shown above your premarket notification will be considered withdrawn.

If you have procedural or policy questions, please contact the Division of Small Manufacturers Assistance at (301) 443-6597 or at their toll-free number (800) 638-2041, or contact me at (301) 594-1190.

Sincerely yours,

Marjorie Shulman
Supervisory Consumer Safety Officer
Premarket Notification Section
Office of Device Evaluation
Center for Devices and
Radiological Health

Questions? Contact FDA/CDRH/OCE/DID at CDRH-FOISTATUS@fda.hhs.gov or 301-796-8118

Records processed under FOIA Request 2013-6292; Released 10/17/14

Medtronic

Medtronic PS Medical
125 Cremona Drive
Goleta, CA 93117-5500 USA
Telephone: (805) 968-1546
Toll Free: (800) 826-5603
FAX: (805) 968-6889

December 17, 1997

Food and Drug Administration
Center for Devices and Radiological Health
Document Mail Center (HFZ-401)
9200 Corporate Blvd.
Rockville, MD 20850

Subject: Becker External Drainage and Monitoring System, K972559

Dear Sir or Madam:

PS Medical submitted a Premarket Notification to the Food and Drug Administration on June 25, 1997. We received a request for additional information dated September 19, 1997. We requested an extension to December 19, 1997 for the submittal of our response to the questions posed in the September 19 letter. We are still awaiting receipt of data needed to complete the preparation of the response to your questions.

We would like therefore, to request an additional extension on our time limit for the presentation of the requested information. If you would keep the Premarket Notification K972559 open, the response will be forwarded to you by January 19, 1998.

Thank you for your time.

Sincerely,

Richard M. Ruedy
Manager Regulatory Affairs

FDA/CDRH/ODE/DMC
18 DEC 97 10 37
RECEIVED

PS MEDICAL

Questions? Contact FDA/CDRH/OCE/DID at CDRH-FOISTATUS@fda.hhs.gov or 301-796-8118

U6 2

Records processed under FOIA Request 2013-6292; Released 10/17/14

DEPARTMENT OF HEALTH AND HUMAN SERVICES

Public Health Service

Food and Drug Administration
Center for Devices and
Radiological Health
Office of Device Evaluation
Document Mail Center (HFZ-401)
9200 Corporate Blvd.
Rockville, Maryland 20850

November 14, 1997

MEDTRONIC PS MEDICAL
125 CREMONA DR.,
UNIVERSITY BUSINESS CENTER
GOLETA, CA 93117
ATTN: RICHARD M. RUEDY

510(k) Number: K972559
Product: MEDTRONIC PS MEDICAL BECKER EXTERNAL DRAINAGE AND

Extended Until: 19-DEC-97

Based on your recent request, an extension of time has been granted for you to submit the additional information we requested.

If the additional information is not received by the "Extended Until" date shown above your premarket notification will be considered withdrawn.

If you have procedural or policy questions, please contact the Division of Small Manufacturers Assistance at (301) 443-6597 or at their toll-free number (800) 638-2041, or contact me at (301) 594-1190.

Sincerely yours,

Marjorie Shulman
Supervisory Consumer Safety Officer
Premarket Notification Section
Office of Device Evaluation
Center for Devices and
Radiological Health

Questions? Contact FDA/CDRH/OCE/DID at CDRH-FOISTATUS@fda.hhs.gov or 301-796-8118

Records processed under FOIA Request 2013-6292; Released 10/17/14

Medtronic

Medtronic PS Medical
125 Cremona Drive
Goleta, CA 93117-5500 USA
Telephone: (805) 968-1546
Toll Free: (800) 826-5603
FAX: (805) 968-6889

November 13, 1997

Food and Drug Administration
Center for Devices and Radiological Health
Document Mail Center (HFZ-401)
9200 Corporate Blvd.
Rockville, MD 20850

RECEIVED
NOV 14 10 46 AM '97
FDA/CDRH/OCE/DMC

Subject: Becker External Drainage and Monitoring System, K972559

Dear Sir or Madam:

PS Medical submitted a Premarket Notification to the Food and Drug Administration on June 25, 1997. We received a request for additional information dated September 19, 1997. We requested an extension to November 19, 1997 for the submittal of our response to the questions posed in the September 19 letter on October 16, 1997. We are in the process of preparing a response to your questions. However, there are still issues that are being addressed by our medical advisor.

We would like therefore, to request an additional extension on our time limit for the presentation of the requested information. If you would keep the Premarket Notification K972559 open, the response will be forwarded to you by December 19, 1997.

Thank you for your time.

Sincerely,

Richard M. Ruedy
Manager Regulatory Affairs

PS MEDICAL

Questions? Contact FDA/CDRH/OCE/DID at CDRH-FOISTATUS@fda.hhs.gov or 301-796-8118

Records processed under FOIA Request 2013-6292; Released 10/17/14

DEPARTMENT OF HEALTH AND HUMAN SERVICES Public Health Service

Food and Drug Administration
Center for Devices and
Radiological Health
Office of Device Evaluation
Document Mail Center (HFZ-401)
9200 Corporate Blvd.
Rockville, Maryland 20850

October 20, 1997

MEDTRONIC PS MEDICAL
125 CREMONA DR.,
UNIVERSITY BUSINESS CENTER
GOLETA, CA 93117
ATTN: RICHARD M. RUEDY

510(k) Number: K972559
Product: MEDTRONIC PS MEDICAL BECKER EXTERNAL DRAINAGE AND

Extended Until: 19-NOV-97

Based on your recent request, an extension of time has been granted for you to submit the additional information we requested.

If the additional information is not received by the "Extended Until" date shown above your premarket notification will be considered withdrawn.

If you have procedural or policy questions, please contact the Division of Small Manufacturers Assistance at (301) 443-6597 or at their toll-free number (800) 638-2041, or contact me at (301) 594-1190.

Sincerely yours,

Marjorie Shulman
Supervisory Consumer Safety Officer
Premarket Notification Section
Office of Device Evaluation
Center for Devices and
Radiological Health

Questions? Contact FDA/CDRH/OCE/DID at CDRH-FOISTATUS@fda.hhs.gov or 301-796-8118

Records processed under FOIA Request 2013-6292; Released 10/17/14

Medtronic

Medtronic PS Medical
125 Cremona Drive
Goleta, CA 93117-5500 USA
Telephone: (805) 968-1546
Toll Free: (800) 826-5603
FAX: (805) 968-6889

October 16, 1997

RECEIVED
OCT 20 10 02 AM '97
FDA/CDRH/ODE/DMC

Food and Drug Administration
Center for Devices and Radiological Health
Document Mail Center (HFZ-401)
9200 Corporate Blvd.
Rockville, MD 20850

Subject: Becker External Drainage and Monitoring System, K972559

Dear Sir or Madam:

PS Medical submitted a Premarket Notification to the Food and Drug Administration on June 25, 1997. We received a request for additional information dated September 19, 1997. We are requesting an extension to November 19, 1997 for the submittal of our response to the questions posed in the September 19 letter. We are in the process of preparing a response to your questions. However, there are still issues that are being addressed by our medical advisor.

We would like therefore, to request an extension on our time limit for the presentation of the additional requested information. If you would keep the Premarket Notification K972559 open, the response will be forwarded to you by November 19, 1997.

Thank you for your time.

Sincerely,

Richard M. Ruedy
Manager Regulatory Affairs

PS MEDICAL

Questions? Contact FDA/CDRH/OCE/DID at CDRH-FOISTATUS@fda.hhs.gov or 301-796-8118

Records processed under FOIA Request 2013-6292; Released 10/17/14

DEPARTMENT OF HEALTH & HUMAN SERVICES

Public Health Service

Food and Drug Administration
9200 Corporate Boulevard
Rockville MD 20850

SEP 19 1997

Mr. Richard M. Ruedy
Manager, Regulatory Affairs
Medtronic PS Medical
125 Cremona Drive
Goleta, California 93117-5500

Re: K972559
Trade Name: Becker External Drainage and Monitoring System (EDMS)
Dated: June 25, 1997
Received: July 9, 1997

Dear Mr. Ruedy:

We have reviewed your Section 510(k) notification of intent to market the device referenced above. We cannot determine if the device is substantially equivalent to a legally marketed predicate device based solely on the information you provided. To complete the review of your submission, we require that you address the following concerns:

(b)(4)

[redacted]

Questions? Contact FDA/CDRH/OCE/DID at CDRH-FOISTATUS@fda.hhs.gov or 301-796-8118

51 9

Records processed under FOIA Request 2013-6292; Released 10/17/14

(b)(4)

[redacted]

We believe that this information is necessary for us to determine whether or not this device is substantially equivalent to a legally marketed predicate device with regard to its safety and effectiveness.

You may not market this device until you have provided adequate information described above and required by 21 CFR 807.87(k), and you have received a letter from FDA allowing you to do so. If you market the device without conforming to these requirements, you will be in violation of the Federal Food, Drug, and Cosmetic Act (Act). You may, however, distribute this device for investigational purposes to obtain clinical data if needed to establish substantial equivalence. Clinical investigations of this device must be conducted in accordance with the investigational device exemption (IDE) regulations.

If the information, or a request for an extension of time, is not received within 30 days, we will consider your premarket notification to be withdrawn and your submission will be deleted from our system. If you submit the requested information after 30 days it will be considered and processed as a new 510(k); therefore, all information previously submitted must be resubmitted so that your new 510(k) is complete.

The requested information, or a request for an extension of time, should reference your above 510(k) number and should be submitted in duplicate to:

Food and Drug Administration
Center for Devices and
Radiological Health
Document Mail Center (HFZ-401)
9200 Corporate Boulevard
Rockville, Maryland 20850

If you have questions concerning the contents of this letter, please contact Megan Moynahan at (301) 443-8517. If you need information or assistance concerning the IDE regulations, please contact the Division

Questions? Contact FDA/CDRH/OCE/DID at CDRH-FOISTATUS@fda.hhs.gov or 301-796-8118 52 8

Records processed under FOIA Request 2013-6292; Released 10/17/14

of Small Manufacturers Assistance at its toll-free number (800) 638-2041 or at (301) 443-6597, or at its internet address "http://www.fda.gov/cdrh/dsmamain.html".

Sincerely yours,

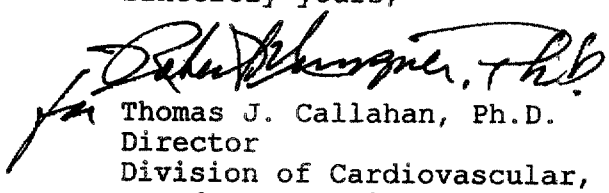

Thomas J. Callahan, Ph.D.
Director
Division of Cardiovascular, Respiratory,
and Neurological Devices
Office of Device Evaluation
Center for Devices
and Radiological Health

Questions? Contact FDA/CDRH/OCE/DID at CDRH-FOISTATUS@fda.hhs.gov or 301-796-8118

Records processed under FOIA Request 2013-6292; Released 10/17/14

SEP 19 1997

Mr. Richard M. Ruedy
Manager, Regulatory Affairs
Medtronic PS Medical
125 Cremona Drive
Goleta, California 93117-5500

Re: K972559
Trade Name: Becker External Drainage and Monitoring System (EDMS)
Dated: June 25, 1997
Received: July 9, 1997

Dear Mr. Ruedy:

We have reviewed your Section 510(k) notification of intent to market the device referenced above. We cannot determine if the device is substantially equivalent to a legally marketed predicate device based solely on the information you provided. To complete the review of your submission, we require that you address the following concerns:

(b)(4)

[redacted]

Questions? Contact FDA/CDRH/OCE/DID at CDRH-FOISTATUS@fda.hhs.gov or 301-796-8118

Records processed under FOIA Request 2013-6292; Released 10/17/14

(b)(4)

[redacted]

We believe that this information is necessary for us to determine whether or not this device is substantially equivalent to a legally marketed predicate device with regard to its safety and effectiveness.

You may not market this device until you have provided adequate information described above and required by 21 CFR 807.87(k), and you have received a letter from FDA allowing you to do so. If you market the device without conforming to these requirements, you will be in violation of the Federal Food, Drug, and Cosmetic Act (Act). You may, however, distribute this device for investigational purposes to obtain clinical data if needed to establish substantial equivalence. Clinical investigations of this device must be conducted in accordance with the investigational device exemption (IDE) regulations.

If the information, or a request for an extension of time, is not received within 30 days, we will consider your premarket notification to be withdrawn and your submission will be deleted from our system. If you submit the requested information after 30 days it will be considered and processed as a new 510(k); therefore, all information previously submitted must be resubmitted so that your new 510(k) is complete.

The requested information, or a request for an extension of time, should reference your above 510(k) number and should be submitted in duplicate to:

Food and Drug Administration
Center for Devices and
Radiological Health
Document Mail Center (HFZ-401)
9200 Corporate Boulevard
Rockville, Maryland 20850

If you have questions concerning the contents of this letter, please contact Megan Moynahan at (301) 443-8517. If you need information or assistance concerning the IDE regulations, please contact the Division

Questions? Contact FDA/CDRH/OCE/DID at CDRH-FOISTATUS@fda.hhs.gov or 301-796-8118

Records processed under FOIA Request 2013-6292; Released 10/17/14

of Small Manufacturers Assistance at its toll-free number (800) 638-2041 or at (301) 443-6597, or at its internet address "http://www.fda.gov/cdrh/dsmamain.html".

Sincerely yours,

Thomas J. Callahan, Ph.D.
Director
Division of Cardiovascular, Respiratory,
and Neurological Devices
Office of Device Evaluation
Center for Devices
and Radiological Health

Questions? Contact FDA/CDRH/OCE/DID at CDRH-FOISTATUS@fda.hhs.gov or 301-796-8118

Records processed under FOIA Request 2013-6292; Released 10/17/14

Prepared by:MBMoynahan:jsy:9/16/97

cc: HFZ-401 DMC
HFZ-404 510(k) Staff
HFZ-450 Division
D.O.

FILE COPY

OFFICE	SURNAME	DATE	OFFICE	SURNAME	DATE	OFFICE	SURNAME	DATE
450	moynahan	9/16						
HFZ-450	[illegible]	9/16/97						

U.S. GPO 1986-169-089

Questions? Contact FDA/CDRH/OCE/DID at CDRH-FOISTATUS@fda.hhs.gov or 301-796-8118

57 13

Records processed under FOIA Request 2013-6292; Released 10/17/14

DEPARTMENT OF HEALTH & HUMAN SERVICES — Public Health Service
Food And Drug Administration

Memorandum

From: Reviewer(s) - Name(s) Megan Moynahan

Subject: 510(k) Number K972559

To: The Record - It is my recommendation that the subject 510(k) Notification:

- ☐ Refused to accept.
- ☑ Requires additional information (other than refuse to accept). per letter.
- ☐ Accepted for review _____
- ☐ Is substantially equivalent to marketed devices.
- ☐ NOT substantially equivalent to marketed devices.
- ☐ Other (e.g., exempt by regulation, not a device, duplicate, etc.)

Is this device subject to Postmarket Surveillance?	☐YES	☑NO
Is this device subject to the Tracking Regulation?	☐YES	☑NO
Was clinical data necessary to support the review of this 510(k)?	☐YES	☑NO
Is this a prescription device?	☑YES	☐NO
Was this 510(k) reviewed by a Third Party?	☐YES	☑NO

This 510(k) contains:

Truthful and Accurate Statement ☐Requested ☑ Enclosed
(required for originals received 3-14-95 and after)

☑A 510(k) summary OR ☐A 510(k) statement

☐ The required certification and summary for class III devices N/A

☑The indication for use form (required for originals received 1-1-96 and after)

The submitter requests under 21 CFR 807.95 (doesn't apply for SEs):

☐ No Confidentiality ☐ Confidentiality for 90 days ☐ Continued Confidentiality exceeding 90 days

Predicate Product Code with panel and class: — Additional Product Code(s) with panel (optional): —

Review: _____
(Branch Chief) (Branch Code) (Date)

Final Review: RTn for DBT 9/16/97
(Division Director) (Date)

Revised:11-20-96

Questions? Contact FDA/CDRH/OCE/DID at CDRH-FOISTATUS@fda.hhs.gov or (301)796-8118

58

Records processed under FOIA Request 2013-6292; Released 10/17/14

510(k) REVIEW

K972559

Company Name: Medtronic PS Medical
Device Name: Becker External Drainage and Monitoring System

1. Life supporting or life sustaining?	No.
2. Implant (short-term or long-term)?	Components may make contact with CSF (see QUESTION 3)
3. Software driven?	No.
4. Devices to which equivalence is claimed:	Codman External Drainage System (K902257 and K910983). Review will also compare to Medtronic PS Medical Becker Drainage System and Clinical Neuro Systems MoniTorr External Drainage System (K920156).
5. Submission provides:	
a. comparative specifications?	Yes.
b. performance testing?	Yes.
c. summary of animal testing?	No.
d. summary of clinical testing?	No.
e. reference to industry standards?	Yes. ASTM F647-85: Standard Practice for Evaluating and Specifying Implantable Shunt Assemblies for Neurosurgical Applications; ISO/DIS 7197 Neurosurgical Implants - Sterile, Single-Use Hydrocephalus Shunts and Components.
f. labeling?	Yes.
g. OTHER:	

6. Description of device and differences between device and pre-enactment / predicate device(s), including indications for use, new technology, and new kinds of safety issues:

INTENDED USE

The Becker External Drainage and Monitoring System (EDMS) is intended to be used for drainage and monitoring of cerebrospinal fluid (CSF) flow from the lateral ventricles or lumbar subarachnoid space.

Questions? Contact FDA/CDRH/OCE/DID at CDRH-FOISTATUS@fda.hhs.gov or 301-796-8118

Records processed under FOIA Request 2013-6292; Released 10/17/14

DEVICE DESCRIPTION

The device consists of a patient connection line, a patient line stopcock, a mounting panel (main system section), a removable drainage bag with approximate volumetric graduations, a microbial filter, and a graduated 50 cc flow chamber to allow fluid drip.

The device does not include the actual CSF shunt (for ventricular drainage) or any type of external catheter. The device is labeled to be used with an External Drainage and Monitoring Ventricular or Lumbar Catheter.

Also, the device allows connection with ICP monitoring equipment and/or other external equipment, but these devices are not included as part of this device. However, the main system section has a pressure scale and a means for establishing a fluid column from the drained CSF. As stated in the Indications for Use, this device is intended to allow ICP monitoring. The method by which ICP monitoring is performed is consistent with the predicate devices.

SAFETY ISSUES

The primary safety concerns for this type of device are **biocompatibility** and **sterility**. A secondary safety concern is the **mechanical integrity** of the components of the device.

In terms of **biocompatibility**, the sponsor states that none of the specific components of this device make patient contact even though the patient connector line makes a connection with other short-term-implanted CSF-contacting equipment. In addition, components are made from the same materials as the predicate manufactured by the same company. The presence of a one-way flow valve would further ensure that components of this device do not make contact with the patient. This device appears to feature such a valve, however, it is not clear whether it is positioned proximal enough to prevent any retrograde flow of fluid back through system components and into the patient. See **QUESTION 3**.

(b)(4) sterility

[redacted]

In terms of the device's **mechanical integrity**, several bench tests were performed to establish the strength of the UV bonds and the acceptable performance under

Questions? Contact FDA/CDRH/OCE/DID at CDRH-FOISTATUS@fda.hhs.gov or 301-796-8118 60

Records processed under FOIA Request 2013-6292; Released 10/17/14

pressurized conditions. However, details of the methodology were not given, so the adequacy of the results cannot be determined. See **QUESTION 1.**

EFFICACY ISSUES

The primary efficacy concerns for this device are **accuracy** of the graduated measurement scales for fluid pressure and volume, and whether the **Instructions for Use** are adequate to assure proper performance of the device.

In terms of **accuracy**, the sponsor mentions two tests, the (b)(4) testing [redacted] (b)(4), and states that all devices passed the test. However, no description of the number of devices tested or the methodology was given. See **QUESTION 1**.

In terms of the **Instructions for Use**, the sponsor has provided a copy of the product labeling, including the instructions. These give recommendations for how to perform the following tasks: system setup, system control, calibration (for external pressure monitoring devices), CSF draining, pressure monitoring, flow monitoring, system flushing, replace / empty drainage bag, system irrigation, CSF sampling, and injection of intraventricular medication. The instructions appear adequate, and are consistent with the predicate device.

7. I believe this submission requires additional information. The sponsor should be sent a K3-AI letter and asked to respond to the following concerns:

(b)(4)

[redacted]

Questions? Contact FDA/CDRH/OCE/DID at CDRH-FOISTATUS@fda.hhs.gov or 301-796-8118 61

Records processed under FOIA Request 2013-6292; Released 10/17/14

(b)(4)

[redacted]

Megan Moynahan, Biomedical Engineer
September 12, 1997

Questions? Contact FDA/CDRH/OCE/DID at CDRH-FOISTATUS@fda.hhs.gov or 301-796-8118

Records processed under FOIA Request 2013-6292; Released 10/17/14

DCRND Screening Checklist for Premarket Notification 510(k)

Device: Becker External Drainage + Monitoring System K972559

Submitter: Medtronic PS Medical

Items which should be Included	PRESENT? Yes	PRESENT? No	✓ if Item Needed & MISSING
1. General information: a) trade name, b) common name, c) establishment registration #, d) address of manufacturer, e) device class, f) new or modification, g) predicate device identified, ~~h) 513/514 compliance (none yet available)~~, i) Truth and Accuracy Statement	✓		
2. SMDA requirements: 510(k) summary or statement (any Class device)	✓		
Class III Certification & Summary (if Class III)	N/A		
3. Proposed Labeling: a) package labels, b) statement of intended use, c) ~~advertisements or promotional materials~~, d) ~~MRI compatibility (if claimed)~~ N/A	✓		
4. Description of device (or modification) including diagrams, engineering drawings, photographs, ~~service manuals~~ N/A	✓		
5. Comparison Information (similarities and differences) to named legally marketed equivalent device (table preferred) should include: a) labeling, b) intended use, c) physical characteristics, d) anatomical sites, f) performance (bench, animal, clinical) testing, g) safety characteristics	✓		
6. Biocompatibility data for all patient-contacting materials, OR, certification of identical material/formulation: a) component & material, b) identify patient-contacting materials, c) biocompatibility of final sterilized product	✓		
7. Sterilization and expiration dating information: a) sterilization method, b) SAL, c) packaging, d) specify pyrogen free, e) ETO residues, f) ~~radiation dose~~	✓		
8. Software validation & verification: a) hazard analysis, b) level of concern, c) development documentation, d) certification	N/A		
9. Meets current DCRND guidelines and applicable standards for this device: a) specify guidance, b) comply with content	✓		

Items shaded under "No" are necessary for all submissions.

ED ing: ✓ Yes ____ No Reviewer: M. Pugh Date: 7/15/97

Questions? Contact FDA/CDRH/OCE/DID at CDRH-FOISTATUS@fda.hhs.gov or 301-796-8118

Records processed under FOIA Request 2013-6292; Released 10/17/14

For DCRND Use Only

DCRND Classification Checklist for Premarket Notification 510(k)

Device: Becker External Drainage + Monitoring System	K972559
Submitter: Medtronic	
Date received: Original 510(k): This submission:	Review cycle

Review Tier (circle one): I, II, III

(for Tier I, complete items 1-5 on the Screening Checklist)

Question	Yes	No
A. Is the product a device?	✓	
B. Is the device exempt from 510(k) by regulation or policy?		✓
C. Expedited Review Status: Requested by sponsor		✓
Identified by DCRND		✓
Granted by DCRND		✓
D. Has this device has been the subject of a previous NSE decision?		
If yes, does this new 510(k) address the NSE Issues(s), e.g., performance data?		
E. Has the sponsor been the subject of an integrity investigation?		
If yes, has the ODE Integrity Officer given permission to proceed with the review?		

Administrative Reviewer Signature: M. Pugliesi Date: 7/15/97

Michael Pugliesi

fda206\c:\wpfiles\510k\screen.fct

April 13, 1995

DCRND form 102

Questions? Contact FDA/CDRH/OCE/DID at CDRH-FOISTATUS@fda.hhs.gov or 301-796-8118

6ul 21

Records processed under FOIA Request 2013-6292; Released 10/17/14

DEPARTMENT OF HEALTH AND HUMAN SERVICES

Public Health Service

Food and Drug Administration
Center for Devices and
Radiological Health
Office of Device Evaluation
Document Mail Center (HFZ-401)
9200 Corporate Blvd.
Rockville, Maryland 20850

July 09, 1997

MEDTRONIC PS MEDICAL
125 CREMONA DR.,
UNIVERSITY BUSINESS CENTER
GOLETA, CA 93117
ATTN: RICHARD M. RUEDY

510(k) Number: K972559
Received: 09-JUL-97
Product: MEDTRONIC PS MEDICAL BECKER EXTERNAL DRAINAGE AND MONITORING SYSTEM

The Center for Devices and Radiological Health (CDRH), Office of Device Evaluation (ODE), has received the Premarket Notification you submitted in accordance with Section 510(k) of the Federal Food, Drug, and Cosmetic Act (Act) for the above referenced product. We have assigned your submission a unique 510(k) number that is cited above. Please refer prominently to this 510(k) number in any future correspondence that relates to this submission. We will notify you when the processing of your premarket notification has been completed or if any additional information is required. YOU MAY NOT PLACE THIS DEVICE INTO COMMERCIAL DISTRIBUTION UNTIL YOU RECEIVE A LETTER FROM FDA ALLOWING YOU TO DO SO.

On January 1, 1996, FDA began requiring that all 510(k) submitters provide on a separate page and clearly marked "Indication For Use" the indication for use of their device. If you have not included this information on a separate page in your submission, please complete the attached and amend your 510(k) as soon as possible. Also if you have not included your 510(k) Summary or 510(k) Statement, or your Truthful and Accurate Statement, please do so as soon as possible. There may be other regulations or requirements affecting your device such as Postmarket Surveillance (Section 522(a)(1) of the Act) and the Device Tracking regulation (21 CFR Part 821). Please contact the Division of Small Manufacturers Assistance (DSMA) at the telephone or web site below for more information.

Please remember that all correspondence concerning your submission MUST be sent to the Document Mail Center (HFZ-401) at the above letterhead address. Correspondence sent to any address other than the Document Mail Center will not be considered as part of your official premarket notification submission. Because of equipment and personnel limitations, we cannot accept telefaxed material as part of your official premarket notification submission, unless specifically requested of you by an FDA official. Any telefaxed material must be followed by a hard copy to the Document Mail Center (HFZ-401).

You should be familiar with the manual entitled, "Premarket Notification 510(k) Regulatory Requirements for Medical Devices" available from DSMA. If you have other procedural or policy questions, or want information on how to check on the status of your submission (after 90 days from the receipt date), please contact DSMA at (301) 443-6597 or its toll-free number (800) 638-2041, or at their Internet address http://www.fda.gov/cdrh/dsmamain.html or me at (301) 594-1190.

Sincerely yours,

Marjorie Shulman
Consumer Safety Officer
Premarket Notification Staff

Questions? Contact FDA/CDRH/OCE/DID at CDRH-FOISTATUS@fda.hhs.gov or 301-796-8118

Records processed under FOIA Request 2013-6292; Released 10/17/14

K972559

Medtronic

Medtronic PS Medical
125 Cremona Drive
Goleta, CA 93117-5500 USA
Telephone: (805) 968-1546
Toll Free: (800) 826-5603
FAX: (805) 968-6889

June 25, 1997

RECEIVED
9 JUN 97 12 41
FDA/CDRH/ODE/DMC

Food and Drug Administration
Center for Devices and Radiological Health
Document Mail Center HFZ-401
9200 Corporate Blvd., Room 20N
Rockville, MD 20850

Subject: 510(k) Notification

Dear Sir or Madam:

In accordance with Section 510(k) of the Federal Food, Drug and Cosmetic Act, and in conformance with 21 CFR 807, this premarket notification is being submitted prior to the date when Medtronic PS Medical Research Corporation proposes to introduce into interstate commerce a device to be known as the Medtronic PS Medical Becker External Drainage and Monitoring System (EDMS).

The product is classified as an Intracranial Pressure Monitoring Device. Intracranial Pressure Monitoring Devices have been classified under 21 CFR 882.1620 into Class II (performance standards) by the Neurological Device Panel.

No performance standards have yet been established applicable to Intracranial Pressure Monitoring Devices, under Section 514 of the Federal Food, Drug and Cosmetic Act. Draft labeling and package insert information is enclosed.

The Becker EDMS is substantially equivalent to the predicate, and currently marketed, Codman External Drainage System II (K902257, K920938). A summary of safety and efficacy, and a bibliography, is provided.

The Medtronic PS Medical Becker EDMS is designed to provide for the drainage of cerebrospinal fluid (CSF), and/or the monitoring of CSF pressure and flow rate from the lateral ventricles of the brain or the lumbar subarachnoid space.

The Medtronic PS Medical Becker EDMS has substantially equivalent performance characteristics as compared with the predicate device. A comparison of the features and device characteristics is included in this submission.

NE II

PS MEDICAL

23

06

Questions? Contact FDA/CDRH/OCE/DID at CDRH-FOISTATUS@fda.hhs.gov or 301-796-8118

Records processed under FOIA Request 2013-6292; Released 10/17/14

The Medtronic PS Medical Becker EDMS has substantially equivalent design specifications as compared with the predicate device, including materials of fabrication. A comparison of design features and specifications is included in this submission.

The Medtronic PS Medical Becker EDMS has substantially equivalent intended uses as compared with the predicate device. Product package literature is included in this submission for the predicate device. Draft product package literature is included in this submission for the Medtronic PS Medical Becker EDMS.

In conclusion, the Medtronic PS Medical Becker EDMS is substantially equivalent to the identified predicate devices.

Medtronic PS Medical considers the information contained in this document to be confidential. Medtronic PS Medical therefore requests that all material and information contained in this Premarket Notification be held confidential and not available under the Freedom of Information Act.

If you have any questions or require additional information, please call me at (805) 968-1546 Ext. 1776.

Sincerely,

Richard M. Ruedy
Manager, Regulatory Affairs

67

Questions? Contact FDA/CDRH/OCE/DID at CDRH-FOISTATUS@fda.hhs.gov or 301-796-8118

Records processed under FOIA Request 2013-6292; Released 10/17/14

Date of Submission:	FDA Document Number:

Section A

X 510(k)	IDE	PMA	PMA Supplement-Regular
510(k) Add'l information	IDE Amendment	PMA Amendment	PMA Supplement-Special
	IDE Supplement	PMA Report	PMA Supplement-30 days
	IDE Report		PMA Supplement-Panel track

Section B1

X New Device	Additional or expanded indications	Change in technology, design, materials or manufacturing process
Other reason (specify)		

Section B2

New Device	Change in design, component, or specification:	Location change:
Withdrawal	Software	Manufacturer
Additional or expanded indications	Color additive	Sterilizer
Licensing agreement	Other (specify below)	Packager
		Distributor
Labeling Change:		
Indications	Process change:	Report submissions:
Instructions	Manufacturer	Annual or Periodic
Performance characteristics	Sterilizer	Post-approval study
Shelf life	Packager	Adverse reaction
Trade name		Device defect
Other (specify below)	Response to FDA correspondence (specify below)	Amendment
	Request for applicant hold	
Change in ownership	Request for removal of applicant hold	
Change in correspondent	Request for extension	
	Request to remove or add manufacturing site	
Other reasons(specify):		

Section B3

New Device	Change in:	Response to FDA letter concerning
Addition of institution	Correspondent	Conditional approval
Expansion/extension of study	Design	Deemed approval
IRB certification	Informed Consent	Deficient final report
Request hearing	Manufacturer	Deficient progress report
Request waiver	Manufacturing	Deficient investigator report
Termination of study	Protocol - feasibility	Disapproval
Withdrawal of application	Protocol - other	Request extension of time to respond to FDA
Unanticipated adverse effect	Sponsor	Request meeting
Emergency use	Report submission:	IOL Submission only:
Notification of emergency use	Current investigator	Change in IOL style
	Annual progress	Request for protocol waiver
Additional information	Site waiver limit reached	
	Final	
Other reasons(specify):		

68

Questions? Contact FDA/CDRH/OCE/DID at CDRH-FOISTATUS@fda.hhs.gov or 301-796-8118

Records processed under FOIA Request 2013-6292; Released 10/17/14

	FDA Document Number:

Section C

Product Code: GWM	C.F.R. Section: 21 CFR	Device Class: Class I / X Class II / Class III / Unclassified
Classification Panel: Neurological		

Section D

Product codes of devices to which substantial equivalence is claimed:				Summary of, or statement concerning, safety and effectiveness data:
1 GWM	2	3	4	X 510(k) summary attached
5	6	7	8	510(k) statement

Information on devices to which substantial equivalence is claimed:

510(k) Number	Trade or proprietary or model name	Manufacturer
1 K902257, K920938	1 External Drainage System II	1 Codman
2	2	2
3	3	3
4	4	4
5	5	5
6	6	6

Section E Product Information (Applicable to all Applications)

Common or usual name or classification name:
Becker External Drainage and Monitoring System

Trade or proprietary or model name	Model number
1 Medtronic PS Medical Becker External Drainage and Monitoring System (EDMS)	1 46128
2	2
3	3
4	4
5	5
6	6

FDA document numbers of all prior related submissions (regardless of outcome)

1	2	3	4	5	6
7	8	9	10	11	12

Data included in submissions: X Laboratory testing Animal trials Human trials

Indications (from labeling):

Draining and monitoring of CSF flow from the lateral ventricles or lumbar subarachnoid space is indicated in selected patients to reduce intracranial pressure (ICP), e.g. pre-intra- or postoperative; monitor CSF chemistry, cytology and physiology; provide temporary CSF drainage in patients with infected cerebrospinal fluid shunts. The monitoring of the intracranial pressure (ICP) is indicated in selected patients with severe head injury; subarachnoid hemorrhage graded III, IV or V preoperatively; Reyes syndrome or similar encephalopathies; hydrocephalus; intracranial hemorrhage or miscellaneous problems when drainage is to be used as a therapeutic maneuver. Monitoring can also be used to evaluate the status pre-and post-operatively for space occupying lesions.

69

Questions? Contact FDA/CDRH/OCE/DID at CDRH-FOISTATUS@fda.hhs.gov or 301-796-8118

86

Records processed under FOIA Request 2013-6292; Released 10/17/14

			FDA Document Number:
Section F			
X Original: Add Delete	FDA establishment registration number: 2021898	X Manufacturer Contract sterilizer Contract manufacturer Repackager/relabeler	
Company/Institution name: Medtronic PS Medical			
Division name:		Phone number (include area code): (805) 968-1546	
Street address: 125 Cremona Drive		FAX number (include area code): (805) 968-5038	
City: Goleta	State/Province: CA	Country: USA	Zip/Postal Code: 93117
Contact name: Richard M. Ruedy			
Contact title: Manager Regulatory Affairs			
Original: Add Delete	FDA establishment registration number:	Manufacturer Contract sterilizer Contract manufacturer Repackager/relabeler	
Company/Institution name: See Above			
Division name:		Phone number (include area code): ( )	
Street address:		FAX number (include area code): ( )	
City:	State/Province:	Country:	Zip/Postal Code:
Contact name:			
Contact title:			
X Original: Add Delete	FDA establishment registration number (b)(4) [redacted]	Manufacturer X Contract sterilizer Contract manufacturer Repackager/relabeler	

(b)(4) [redacted]

70

29

Records processed under FOIA Request 2013-6292; Released 10/17/14

	FDA Document Number:

Section G — Applicant/Sponsor

Company/Institution name: **Medtronic PS Medical**			FDA establishment registration number: **2021898**
Division name:			Phone number (include area code): **(805) 968-1546**
Street address: **125 Cremona Drive**			FAX number (include area code): **(805) 968-5038**
City: **Goleta**	State/Province: **CA**	Country: **USA**	Zip/Postal Code: **93117**
Signature: Richard M. Ruedy 7/8/97			
Name: **Richard M. Ruedy**			
Title: **Manager, Regulatory Affairs**			

Section H — Submission correspondent (if different from above)

Company Institution name:			
Division name (if applicable):			Phone number (include area code): ( )
Street address:			FAX number (include area code): ( )
City:	State/Province :	Country:	Zip/Postal Code:
Contact name:			
Contact name:			

Your voluntary completion of this Cover Sheet will not affect any FDA decision concerning [illegible] mission, but will help FDA's Center for Devices and Radio[illegible] to process your submission more efficiently. This information [illegible] should apply only to a single accompanying [illegible] and cover sheets for any previous submissions. [illegible] for additional information on completing this [illegible] you have a question concerning completion of the [illegible] please contact the Division of Small Manufacturers Assistance [illegible] or (301) 443-6597.

71

28

Records processed under FOIA Request 2013-6292; Released 10/17/14

Device Name: Becker External Drainage and Monitoring System (EDMS)

510(k) Number (if known):

Indications for Use:

"Draining and monitoring of CSF flow from the lateral ventricles or lumbar subarachnoid space is indicated in selected patients to reduce intracranial pressure (ICP), e.g. pre-intra- or postoperative; monitor CSF chemistry, cytology and physiology; provide temporary CSF drainage in patients with infected cerebrospinal fluid shunts. The monitoring of the intracranial pressure (ICP) is indicated in selected patients with severe head injury; subarachnoid hemorrhage graded III, IV or V preoperatively; Reyes syndrome or similar encephalopathies; hydrocephalus; intracranial hemorrhage or miscellaneous problems when drainage is to be used as a therapeutic maneuver. Monitoring can also be used to evaluate the status pre-and postoperatively for space occupying lesions."

(PLEASE DO NOT WRITE BELOW THIS LINE - CONTINUE ON ANOTHER PAGE IF NEEDED)

CONCURRENCE OF CDRH, OFFICE OF DEVICE EVALUATION (ODE)

(Division Sign-Off)
Division of Cardiovascular, Respiratory, and Neurological Devices

510(k) Number _____

Over the Counter Use:
or
Prescription Use:
(Per 21 CFR 801.109)

(optional format 1-2-96)

72

Questions? Contact FDA/CDRH/OCE/DID at CDRH-FOISTATUS@fda.hhs.gov or 301-796-8118

97

Records processed under FOIA Request 2013-6292; Released 10/17/14

PREMARKET NOTIFICATION
TRUTHFUL AND ACCURATE STATEMENT
[As required by 21 CFR 807.87(j)]

I certify that, in my capacity as Manager Regulatory Affairs of Medtronic PS Medical I believe to the best of my knowledge, that all data and information submitted in the premarket notification are truthful and accurate and that no material fact has been omitted.

Richard M. Ruedy
(Signature)

Richard M. Ruedy

7/8/97
(Dated)

K972559
* (Premarket Notification (510k) Number)

* For a new submission, do not fill in the 510(k) number blank.

73

Questions? Contact FDA/CDRH/OCE/DID at CDRH-FOISTATUS@fda.hhs.gov or 301-796-8118

30

Records processed under FOIA Request 2013-6292; Released 10/17/14

Medtronic PS Medical
510(k) Notification for
Becker EDMS

The following information is being submitted in conformance with 21 CFR 807.87:

Trade Name:	Medtronic PS Medical Becker EDMS
Common Name:	Becker External Drainage and Monitoring System
Model Number:	46128
Manufacturer:	Medtronic PS Medical Corporation 125 Cremona Drive Goleta CA, 93117 (805) 968-1546 ext. 1776 Fax: (805) 968-5038
Contact Person:	Richard M. Ruedy
Registration Number:	2021898
Classification Name:	Intracranial Pressure Monitoring Device
Panel number:	84
Product Code:	GWM
Regulatory Class:	II

Records processed under FOIA Request 2013-6292; Released 10/17/14

Table of Contents

1	General Information	1
2	Safety and Effectiveness Summary	2 - 5
3	Proposed Labeling	6 - 7
4	Device Description	8
5	Comparative Information	9 - 10
6	Biocompatibility Assessment	11 - 13
7	Sterilization Information	14 - 15
8	Software Validation and Verification	16
9	Specific Standards and Guidances	17
10	Bibliography	18 - 20

75

Questions? Contact FDA/CDRH/OCE/DID at CDRH-FOISTATUS@fda.hhs.gov or 301-796-8118

Records processed under FOIA Request 2013-6292; Released 10/17/14

TABLE OF CONTENTS

I. General Information
- Trade or Proprietary Name
- Common, Usual or Classification Name
- Establishment Registration Number
- Address of Manufacturer
- Device Classification
- Predicate Device Identification
- 513/514 Compliance Statement
- Class III Certification and Summary

II. Safety and Effectiveness Summary
- Determination of Substantial Equivalence
- Device Name
- Predicate Device(s)
- Device Description
- Intended Use
- Intended Use of the Predicate Device
- Technological Comparison
- Discussion of Non-Clinical Tests and Conclusions
- Summary of Safety and Effectiveness

III. Proposed Labeling
- Package Labels
- Device Labels
- Patient Labels
- Statement of Intended Use
- Instructions for Use
- Advertisements or Promotional Material
- MRI Compatibility

IV. Device Description
- General Description
- Components
- Specifications
- Diagrams, Engineering Drawings, Photographs
- Service or Operators Manual

Questions? Contact FDA/CDRH/OCE/DID at CDRH-FOISTATUS@fda.hhs.gov or 301-796-8118

Records processed under FOIA Request 2013-6292; Released 10/17/14

V. Comparative Information
- Product Labeling
- Intended Use
- Physical Characteristics
- Anatomical Sites
- Target Population
- Performance Testing
- Safety Characteristics

VI. Biocompatibility Assessment
- Component and Material
- Patient Contact Materials
- Biocompatibility of Final Sterilized Product

VII. Sterilization Information
- Sterilization Method
- Sterility Assurance Level (SAL)
- Packaging
- Sterilization Doses Residues
- Expiration Date
- Pyrogen Indication

VIII. Software Validation and Verification
- Hazard Analysis
- Level of Concern
- Development Documentation
- Certification

IX. Specific Standards and Guidances

X. Bibliography

Questions? Contact FDA/CDRH/OCE/DID at CDRH-FOISTATUS@fda.hhs.gov or 301-796-8118

Records processed under FOIA Request 2013-6292; Released 10/17/14

I. General Information

Trade or Proprietary Name
Medtronic PS Medical Becker External Drainage and Monitoring System (EDMS)

Common usual or Classification Name
Becker External Drainage and Monitoring System (EDMS)

Establishment Registration Number
2021898

Address of Manufacturer
Medtronic PS Medical Corporation
125 Cremona Drive
Goleta CA, 93117
(805) 968-1546 ext. 1776
Fax: (805) 968-5038

Device Classification
The product is classified as an Intracranial Pressure Monitoring Device. Intracranial Pressure Monitoring Devices have been classified under 21 CFR 882.1620 into Class II (performance standards) by the Neurological Device Panel.

Predicate Device Identification
Codman External Drainage System II (K902257, K920938)

513/514 Compliance Statement
No standards have been developed for this product.

Class III Certification and Summary
Not Applicable.

78 365

Questions? Contact FDA/CDRH/OCE/DID at CDRH-FOISTATUS@fda.hhs.gov or 301-796-8118

Records processed under FOIA Request 2013-6292; Released 10/17/14

II. Safety and Effectiveness Summary

Determination of substantial equivalence
The ICP monitoring device and method were first described in an article published in 1973. Over the years the device has come into widespread use.

Medtronic PS Medical has, with input from neurosurgeons, developed a device design, which is considered to be equivalent to the predicate Codman External Drainage System II (K902257, ~~K920938~~). The Medtronic PS Medical Becker EDMS is a complete closed system indicated for the draining and monitoring of CSF flow from the lateral ventricles or lumbar subarachnoid space.
K910938 - listed incorrectly throughout

Medtronic PS Medical considers the Medtronic PS Medical Becker EDMS to be substantially equivalent to the Codman External Drainage System II (K902257, K920938), currently in commercial distribution. The predicate device is used for draining cerebrospinal fluid (CSF) and other fluids of similar physical characteristics as a means of reducing and controlling increased intracranial volume and pressure when the insertion of a permanent internal shunt is not needed. A comparison of the Codman External Drainage System II and the Medtronic PS Medical Becker EDMS is included in Tables 1 and 2.

Medtronic PS Medical considers the Becker EDMS to be safe, effective and substantially equivalent in indications, physical characteristics and performance to the noted predicate device. Evidence of this is provided in predicate device product labeling (Attachment 2).

Device Name
Medtronic PS Medical Becker External Drainage and Monitoring System (Becker EDMS).

Predicate Device(s)
Codman External Drainage System II (K902257, K920938)

Device Description
The Medtronic PS Medical Becker EDMS is indicated for the draining and monitoring of CSF flow from the lateral ventricles or lumbar subarachnoid space. The Becker EDMS is substantially equivalent in indications, materials of fabrication, performance characteristics and design specifications as compared with the predicate device, Codman External Drainage System II.

The materials utilized in the Becker EDMS are not substantially different to those used in currently marketed products. The Becker EDMS is comprised of a nondistensible blue striped (proximal end) patient connection line, patient line stopcock, mounting panel/main system section, three non-latex injection sites, and a removable drainage bag with approximate volumetric graduations and microbial filter. A graduated 50 cc

Questions? Contact FDA/CDRH/OCE/DID at CDRH-FOISTATUS@fda.hhs.gov or 301-796-8118

Records processed under FOIA Request 2013-6292; Released 10/17/14

flow chamber with drip former and conical bottom and locking bracket is included on the main system section.

A comparison of the Becker EDMS and predicate device is provided in Table 1.

Intended Use
The Medtronic PS Medical Becker EDMS will be indicated for use as follows:
"Draining and monitoring of CSF flow from the lateral ventricles or lumbar subarachnoid space is indicated in selected patients to reduce intracranial pressure (ICP), e.g. pre-intra- or postoperative; monitor CSF chemistry, cytology and physiology; provide temporary CSF drainage in patients with infected cerebrospinal fluid shunts. The monitoring of the intracranial pressure (ICP) is indicated in selected patients with severe head injury; subarachnoid hemorrhage graded III, IV or V preoperatively; Reyes syndrome or similar encephalopathies; hydrocephalus; intracranial hemorrhage or miscellaneous problems when drainage is to be used as a therapeutic maneuver. Monitoring can also be used to evaluate the status pre-and postoperatively for space occupying lesions."

Draft Medtronic PS Medical product labeling and product literature for the Medtronic PS Medical Becker EDMS is included (Attachment 1).

Intended Use predicate device
The predicate device Codman External Drainage System II is indicated for use as follows:

"Use of the Codman External Drainage System II is indicated for draining cerebrospinal fluid (CSF) and other fluids of similar physical characteristics as a means of reducing and controlling increased intracranial volume and pressure when the insertion of a permanent internal shunt is not indicated."

Product literature for the predicate Codman External Drainage System II is included (Attachment 2).

Questions? Contact FDA/CDRH/OCE/DID at CDRH-FOISTATUS@fda.hhs.gov or 301-796-8118

Records processed under FOIA Request 2013-6292; Released 10/17/14

Technological comparison

The Medtronic PS Medical Becker EDMS and the Codman External Drainage System are manufactured of not substantially different materials. The devices are equivalent in design, components and intended use.

Feature	Medtronic PS Medical Becker EDMS	Codman External Drainage System II
Device configuration/contents	• Available separately	• Ventricular Catheter
	• Available separately	• 36 cm stainless steel stylet
	• Available separately	• Curved stainless steel trocar
	• Available separately	• Female luer-lock and cap
	• Optional self-adjusting cord with lock	• Doubled 24 in. string w/Cord-loc® locking mechanism
	Mounting panel main system section	• 27 cm measuring backboard
	• 50 cc Conical sliding graduated flow chamber with locking bracket and atmospheric vent	• 75 mL drip chamber with anti-reflux valve and atmospheric vent
	• Nondistensible blue striped patient connection line	• 157 cm patient line with two slide clamps
	• Two four way stopcocks	• Two four way stopcocks with female luer port
	• Two non-latex injection/sampling sites	• Two latex injection/sampling sites
	• 700 mL drainage bag (removable) with volumetric graduations, microbial filter and drain port	• 700 mL capacity graduated vinyl collection bag
	• Drainage bag connection line	
	• Two drainage line slide clamps	

81 89

Questions? Contact FDA/CDRH/OCE/DID at CDRH-FOISTATUS@fda.hhs.gov or 301-796-8118

Records processed under FOIA Request 2013-6292; Released 10/17/14

Discussion of non-clinical tests and conclusions
Device testing of the Becker EDMS was performed in conformance with ASTM F647-85 (and as proposed for the 1993 revision): Standard Practice for Evaluating and Specifying Implantable Shunt Assemblies for Neurosurgical Application and ISO draft Standard ISO/DIS 7197: Neurosurgical Implants - Sterile, Single-Use Hydrocephalus Shunts and Components as applicable. Medtronic PS Medical participates in the working groups that are developing both the ASTM and ISO standards.

Medtronic PS Medical submits that the materials of fabrication, intended uses, performance characteristics and design specifications of the Becker EDMS are substantially equivalent to those of the predicate device. This predicate product has demonstrated many years of safe and effective clinical performance. Equivalence to predicate product is supported by Table 1 and 2.

Summary of safety and effectiveness
The determination of safety and efficacy for the Medtronic PS Medical Becker EDMS is based upon the predicate Codman External Drainage System II (along with other predicate Medtronic PS Medical products).

The safety and efficacy of design and indications is based upon approximately 30 years of clinical history with central nervous system (CNS) fluid shunts fabricated from silicone elastomer and plastic. The materials utilized in the Medtronic PS Medical Becker EDMS have demonstrated clinical *in-vivo* safety and efficacy since 1980.

The Codman External Drainage System II and equivalent Medtronic PS Medical products have proven safe and effective for draining and monitoring CSF flow from the lateral ventricles or lumbar subarachnoid space.

Complications associated with the use of the device may be similar to those experienced in any other surgical procedure carried out under local and/or general anesthetic:

Reactions to drugs or anesthetic agents;
Electrolyte imbalance;
Excessive blood loss;

Local and systemic infections are not uncommon with this type of procedure. They are most usually due to organisms that inhabit the skin, particularly *Staphylococcus epidermidis*.

Based upon the summary above, Medtronic PS Medical determines substantial equivalence, safety, and efficacy of the Becker EDMS based upon the predicate and currently marketed devices.

Questions? Contact FDA/CDRH/OCE/DID at CDRH-FOISTATUS@fda.hhs.gov or 301-796-8118

Records processed under FOIA Request 2013-6292; Released 10/17/14

III. Proposed Labeling

Package Labels
Copies of Package labels are included in Attachment 1.

Device Labels
Copies of Device labels are included in Attachment 1.

Patient Labels
Patient labels are not required for the Becker EDMS. The device is not intended for patient manipulation.

Statement of Intended Use
The device is indicated for draining and monitoring of CSF flow from the lateral ventricles or lumbar subarachnoid space is indicated in selected patients to reduce intracranial pressure (ICP), e.g. pre-intra- or postoperative; monitor CSF chemistry, cytology and physiology; provide temporary CSF drainage in patients with infected cerebrospinal fluid shunts. The monitoring of the intracranial pressure (ICP) is indicated in selected patients with severe head injury; subarachnoid hemorrhage graded III, IV or V preoperatively; Reyes syndrome or similar encephalopathies; hydrocephalus; intracranial hemorrhage or miscellaneous problems when drainage is to be used as a therapeutic maneuver. Monitoring can also be used to evaluate the status pre-and postoperatively for space occupying lesions.

The ability to drain CSF and monitor CSF pressure is indicated to:

1. Reduce ICP
2. Monitor CSF chemistry and physiology
3. Provide temporary drainage of CSF in patients with an infected CSF shunt

Intracranial pressure monitoring is suggested in cases of:

1. Severe head injury
2. Subarachnoid hemorrhage
3. Reyes syndrome or other similar encephalopathies
4. Hydrocephalus
5. Intracranial hemorrhage
6. Other conditions where drainage is used as a therapeutic approach
7. Evaluate status of space occupying lesions

Instructions for Use
A copy of the Instructions for Use is included in Attachment 1.

Advertisements or Promotional Material
Not applicable at this time.

83 40

Questions? Contact FDA/CDRH/OCE/DID at CDRH-FOISTATUS@fda.hhs.gov or 301-796-8118

Records processed under FOIA Request 2013-6292; Released 10/17/14

MRI Compatibility
Not applicable for this product which is a short term external use device.

Questions? Contact FDA/CDRH/OCE/DID at CDRH-FOISTATUS@fda.hhs.gov or 301-796-8118

Records processed under FOIA Request 2013-6292; Released 10/17/14

IV. Device Description

General Description

The Becker EDMS is comprised of a nondistensible blue striped (proximal end) patient connection line, patient line stopcock, mounting panel/main system section, three non-latex injection sites, and a removable drainage bag with approximate volumetric graduations and microbial filter. A graduated 50 cc flow chamber with drip former and conical bottom and locking bracket is included on the main system section.

Components

Nondistensible blue striped (proximal end)
Patient connection line,
Patient line stopcock,
Mounting panel/main system section,
Removable drainage bag with approximate volumetric graduations and microbial filter.
Graduated 50 cc flow chamber with drip former and conical bottom and locking bracket

Product is intended for use with an External Drainage and Monitoring (EDM) Ventricular or Lumbar Catheter.

Specifications

Product specifications are noted on the engineering drawings (Attachment 4).

Diagrams, Engineering Drawings, Photographs

Engineering drawings are included in Attachment 4.

Service or Operators Manual

Not applicable for this product which, as a single use product is not intended to be serviced. All product instructions are included in the Instructions for Use (Attachment 1).

Questions? Contact FDA/CDRH/OCE/DID at CDRH-FOISTATUS@fda.hhs.gov or 301-796-8118

Records processed under FOIA Request 2013-6292; Released 10/17/14

V. Comparative Information

Product Labeling
Product Instructions for use for the Codman External Drainage System II are included in Attachment 2.

Intended Use
Use of the Codman External Drainage System II is indicated for draining cerebrospinal fluid (CSF) and other fluids of similar physical characteristics as a means of reducing and controlling increased intracranial volume and pressure when the insertion of a permanent internal shunt is not indicated.

Physical Characteristics

Feature	Medtronic PS Medical Becker EDMS	Codman External Drainage System II (K902257, K920938)
	• Mounting panel main system section	• 27 cm measuring backboard
	• 50 cc Conical sliding graduated flow chamber with locking bracket and atmospheric vent	• 75 mL drip chamber with anti-reflux valve and atmospheric vent
	• Nondistensible blue striped patient connection line	• 157 cm patient line with two slide clamps
	• Two four way stopcocks	• Two four way stopcocks with female luer port
	• Two non-latex injection/sampling sites	• Two latex injection/sampling sites
	• 700 mL drainage bag (removable) with volumetric graduations, microbial filter and drain port	• 700 mL capacity graduated vinyl collection bag
	• Drainage bag connection line	
	• Two drainage line slide clamps	

Records processed under FOIA Request 2013-6292; Released 10/17/14

Anatomical Sites
The device is indicated for draining and monitoring of CSF flow from the lateral ventricles or lumbar subarachnoid space

Target Population
The device is indicated in selected patients to reduce intracranial pressure (ICP), e.g. pre-intra- or postoperative; monitor CSF chemistry, cytology and physiology; provide temporary CSF drainage in patients with infected cerebrospinal fluid shunts. The monitoring of the intracranial pressure (ICP) is indicated in selected patients with severe head injury; subarachnoid hemorrhage graded III, IV or V preoperatively; Reyes syndrome or similar encephalopathies; hydrocephalus; intracranial hemorrhage or miscellaneous problems when drainage is to be used as a therapeutic maneuver.

Performance Testing
Performance tests will be conducted in accordance with ASTM F647-85, ISO/DIS 7197, and any other applicable standard. Samples will be tested after all production processing, including EtO sterilization. Test results shall meet labeling claims and other documented specifications.

Upon completion of pilot runs and the assessment of all performance tests, processes and quality control criteria, Medtronic PS Medical management will approve final criteria for production release and necessary on-line product performance tests. These product performance tests will be integrated with quality control release criteria. Quality control release criteria will also include cosmetic characteristics, dimensional characteristics, and packaging concerns.

Product performance testing during production processes in conjunction with pilot run testing, product development testing, Medtronic PS Medical performance criteria, and criteria as established by ASTM F647-85, ISO/DIS 7197 and other applicable standards will assure the safe and efficacious performance of the Medtronic PS Medical Becker EDMS. Copies of Product testing is included in Attachment 3.

Safety Characteristics
The device is designed to provide for patient safety and clinician ease of use. The device incorporates the following features to provide for safety and ease of use:

1. Blue striped patient line tubing to alert medical of CSF-access.
2. Flag on patient line warning of CSF-access.
3. Flag on filter access at top of Drip Chamber to alert medical staff of slide clamp.
4. Slide clamp above drainage bag to prevent CSF leakage during drainage bag replacement.
5. Latex free injection sites prevent potential allergic reaction of patients and/or medical staff.

Device description outlining features and methods of use as well as contraindications and warnings are included in the Instructions for Use (Attachment 1).

87

Questions? Contact FDA/CDRH/OCE/DID at CDRH-FOISTATUS@fda.hhs.gov or 301-796-8118

Records processed under FOIA Request 2013-6292; Released 10/17/14

VI. Biocompatibility Assessment

Component and Material

Process validation is a requirement of the Good Manufacturing Practice Regulations for Medical Devices, 21 CFR Part 820. Medtronic PS Medical references "Guideline on General Principles of Process Validation" dated May 1987 prepared by the FDA, and is in compliance with this guideline. In addition, an integral part of process validation is preproduction quality assurance planning. Medtronic PS Medical references "Preproduction Quality Assurance Planning: Recommendations for Medical Device Manufacturers" dated September 1989 prepared by the FDA, and is in compliance with this guideline.

No performance standards have yet been established applicable to Intracranial Pressure Monitoring Devices under Section 514 of the Federal Food, Drug and Cosmetic Act. Testing during the design stages of the Medtronic PS Medical Becker EDMS was accomplished in order to ensure performance, safety and efficacy in accordance with 21 CFR 820 (Good Manufacturing Practices), ASTM F647-85 (and as proposed for the 1993 revision): Standard Practice for Evaluating and Specifying Implantable Shunt Assemblies for Neurosurgical Application, ISO draft Standard ISO/DIS 7197: Neurosurgical Implants - Sterile, Single-Use Hydrocephalus Shunts and Components, Medtronic PS Medical standards and performance specifications, and intended customer use.

All tests performed through process validation have confirmed component and finished product durability and repeatability and assure adequate testing regarding safe and efficacious performance *in vivo*. In the absence of performance standards, ASTM F647-85 and ISO/DIS 7197 are referenced. These standard practices apply to CSF shunt products and provide minimum requirements for the assurance of safety and efficacy.

Patient Contact Materials

The materials used to fabricate the Becker EDMS are not substantially different to materials that have been used to fabricate other Medtronic PS Medical EDMS products since 1980. Medtronic PS Medical is, therefore, referencing the established clinical history of these products and materials of fabrication in lieu of requiring additional testing. The materials are outlined in the table below.

88

Questions? Contact FDA/CDRH/OCE/DID at CDRH-FOISTATUS@fda.hhs.gov or 301-796-8118

Records processed under FOIA Request 2013-6292; Released 10/17/14

Materials	Component	Flow Path	Patient Contact
(b)(4) materials [redacted]	Injection site	Yes	No
	Y - injection site Male luer adapter	Yes	No
	Straight connector	Yes	No
	Cordlock, Thumb screw	No	No
	Adhesive	No	No
	Tubing	Yes	No
	Tubing	Yes	No
	Mini slide clamp	No	No
	Chamber washer	Yes	No
	Back panel	No	No
	Graduated chamber	Yes	No
	Adapter, luer lock	Yes	No
	Drainage bag	No	No
	Male/Female non-vented cap	No	No
	Filter cap membrane	No	No
	Filter cap washer	No	No
	Filter cap housing	No	No
	Sliding clamp	No	No
	Bracket back panel, Top cap bracket Drip chamber cap Hanger button	No	No
	Stopcock	Yes	No

Biocompatibility of final sterilized product

This product is designed for external short term single use. The device has no direct patient contact as it is not an implantable device. Performance tests will be conducted in accordance with ASTM F647-85, ISO/DIS 7197, and any other applicable standard. Samples will be tested after all production processing, including EtO sterilization. Biocompatibility tests are conducted at the component level. Test results shall meet labeling claims and other documented specifications.

Questions? Contact FDA/CDRH/OCE/DID at CDRH-FOISTATUS@fda.hhs.gov or 301-796-8118

Records processed under FOIA Request 2013-6292; Released 10/17/14

All tests performed through process validation have confirmed component and finished product durability and repeatability and assure adequate testing regarding safe and efficacious performance *in vivo*. In the absence of performance standards, ASTM F647-85 and ISO/DIS 7197 are referenced. These standard practices apply to CSF shunt products and provide minimum requirements for the assurance of safety and efficacy.

Upon completion of pilot runs, and the assessment of all performance tests, processes and quality control criteria, Medtronic PS Medical management will approve final criteria for production release and necessary on-line product performance tests. These product performance tests will be integrated with quality control release criteria. Quality control release criteria will also include cosmetic characteristics, dimensional characteristics, and packaging concerns.

Medtronic PS Medical evaluates and documents all quality concerns and product complaints within the Quality Assurance function. All test data and evaluations are contained in product specific laboratory notebooks and dossier files. These notebooks and files contain design development, design evaluation, and design quality monitoring information. All failure data summaries from product complaints are reviewed by personnel responsible for product manufacture and product design to ensure proper feedback and the completion of any necessary corrective action.

Additionally, product field complaint trends are presented regularly to Medtronic PS Medical management, and to line personnel from Manufacturing, Quality Control, Pilot and Research & Development. This provides the continued opportunity to internally critique device fabrication processes and design, based on external (field) input.

The Medtronic PS Medical Becker EDMS is equivalent in materials and intended use to other currently marketed external drainage and monitoring products. These products have a long term history of effective clinical use. The external drainage and monitoring product biocompatibility is demonstrated in its clinical history of effective and beneficial use over many years.

Questions? Contact FDA/CDRH/OCE/DID at CDRH-FOISTATUS@fda.hhs.gov or 301-796-8118

Records processed under FOIA Request 2013-6292; Released 10/17/14

VII Sterilization Information

Sterilization Method

(b)(4)

[redacted]

Packaging

The product is packaged in a Tyvek/poly-mylar peel pouch and boxed.

Sterilization Doses/Residues

(b)(4) (b)(4)

[redacted]

Expiration Date

The product expiration date is listed on the product labeling. The product shelf-life is 5 years. The shelf life for the Codman External Drainage System II (K902257, K920938) is not listed on product package labels.

91

Questions? Contact FDA/CDRH/OCE/DID at CDRH-FOISTATUS@fda.hhs.gov or 301-796-8118

Records processed under FOIA Request 2013-6292; Released 10/17/14

Pyrogen Indication

Replicate pyrogen testing is performed on the initial production lots of products to verify that fabrication and processing controls have maintained a non-pyrogenic state. Medtronic PS Medical conforms to FDA standards concerning acceptable pyrogen levels for devices which contact cerebrospinal fluid. Utilizing the Kinetic-Chromogenic LAL method the Becker EDMS will be qualified to meet a .06 EU per mL specification.

Questions? Contact FDA/CDRH/OCE/DID at CDRH-FOISTATUS@fda.hhs.gov or 301-796-8118

Records processed under FOIA Request 2013-6292; Released 10/17/14

VIII Software Validation and Verification

Hazard Analysis
The device does nor incorporate software.

Level of Concern
The device does not incorporate software.

Development Documentation
The device does not incorporate software

Certification
The device does not incorporate software.

Questions? Contact FDA/CDRH/OCE/DID at CDRH-FOISTATUS@fda.hhs.gov or 301-796-8118

Records processed under FOIA Request 2013-6292; Released 10/17/14

IX Specific Standards and Guidances

Intracranial Pressure Monitoring Devices have been classified under 21 CFR 882.1620 into Class II (performance standards) by the Neurological Device Panel.

ASTM F647-85 (and as proposed for the 1993 revision): Standard Practice for Evaluating and Specifying Implantable Shunt Assemblies for Neurosurgical Application

ISO draft Standard ISO/DIS 7197: Neurosurgical Implants - Sterile, Single-Use Hydrocephalus Shunts and Components

Good Manufacturing Practice Regulations for Medical Devices, 21 CFR Part 820.
"Guideline on General Principles of Process Validation" dated May 1987

"Preproduction Quality Assurance Planning: Recommendations for Medical Device Manufacturers" dated September 1989

EN 550 Sterilization of Medical Devices

Questions? Contact FDA/CDRH/OCE/DID at CDRH-FOISTATUS@fda.hhs.gov or 301-796-8118

Records processed under FOIA Request 2013-6292; Released 10/17/14

X Bibliography

1. Becker DP, Miller JD, Ward, JD, Greenberg, RP, Young, HF and Sakalas R. The outcome from severe head injury with early diagnosis and intensive management. J Neurosurg 1977;47:491-502.
2. Becker DP, Vries JK, Sakalas R, Young, HF and Ward J. Early prognosis in head injury based on motor posturing, oculocephalic reflexes and intracranial pressure. In: McLaurin RL, ed. Head Injuries. New York, San Francisco, London: Grune and Stratton, Inc; 1970.
3. Becker DP, Young HF, Vries JK and Sakalas R. Monitoring in patients with brain tumors. Clin Neurosurg 1975;22:364-388.
4. Bruce DA, Berman WA and Schut L. Cerebrospinal fluid pressure monitoring in children: Physiology, pathology and clinical usefulness. In: Barnes LA, ed. Advances in Pediatrics. v. 24. Chicago: Year Book Medical Publishers, Inc; 1977.
5. Bruce DA, Miller JD, Langfitt TW, Goldberg HI, Stanek AE and Vapalahti M. CSF and intracranial pressure in comatose patients. European Neurol 1972;8:200-206.
6. Bruce DA, Schut L, Bruno LA, Wood JH and Sutton LN. Outcome following severe head injuries in children. J Neurosurg 1978;48:679-688.
7. Cooper Paul R. Post-Traumatic Intracranial Mass Lesions. In: Cooper PR ed. Head Injury. Baltimore, London: Williams and Wilkins; 1982;11:185-231.
8. dÕAvella D, Scanarino M, Zuccarello M and Mingrino S. The value of continuous subarachnoid monitoring of ICP with reference to the leakage of CSF. Neurochirurgia. 1981;24:6-9.
9. Findler G, Sahar A and Beller AJ. Continuous lumbar drainage of cerebrospinal fluid in neurosurgical patients. Surg Neurol 1977;8:455-457.
10. Fleischer AS, Nettleton SP and Tindall GT. Continuous monitoring of intracranial pressure in severe closed head injury without mass lesions. Surg Neurol 1976;6:30-34.
11. Gennarelli TA, Pastuszko M, Sakamoto T, Duhaine C and Tomei G. ICP after diffuse head injuries. Abstract presented at International Symposium on ICP Ð Glasgow: June 1985.
12. Guillaume J and Janny P. Manometrie intracranienne continue. Rev Neurol 1957;84:131-142.
13. Haan J and Thomeer RTWM. Predictive value of temporary external lumbar drainage in normal pressure hydrocephalus. Neurosurgery 1988;22:388-391.
14. James HE, Bruno L and Schut L. Intracranial subarachnoid pressure monitoring in children. Surg Neurol 1975;3:313-315.
15. James HD, Bruno L, Shapiro H, Levitt JD, Aidinis S, Langfitt TW and Shalna E. Methodology for intraventricular and subarachnoid continuous recording of intracranial pressure in clinical practice. Acta Neurochir 1976;33:45-51.
16. James HE, Langfitt TW, Kumar VS and Ghostine SY. Treatment of intracranial pressure. Analysis of 105 consecutive, continuous recordings of intracranial pressure. Acta Neurochir 1977;36:189-200.
17. 77;77:448-450.
18. Johnston IH, Johnston JA and Jennett B. Intracranial-pressure changes following head injury. Lancet 1970;2:433-436.
19. Kindt GW and Kahn EA. Expanding lesions of the brain and increased intracranial pressure. In: Schneider RC, Kahn EA, Crosby EC and Taren JA ed. Correlative Neurosurgery,VI. Springfield, IL: CC Thomas; 1982; 3:3-21.

95 52

Questions? Contact FDA/CDRH/OCE/DID at CDRH-FOISTATUS@fda.hhs.gov or 301-796-8118

Records processed under FOIA Request 2013-6292; Released 10/17/14

20. Langfitt TW. Pathophysiology of increased ICP. In: Brock M and Dietz H ed. Intracranial Pressure, Experimental and Clinical Aspects. Berlin: Springer-Verlag; 1972; 361-364.
21. Langfitt TW. Measuring the outcome from head injuries. J Neurosurg 1978;48:673-678.
22. Leavens ME, et al. Intrathecal and intraventricular morphine for pain in cancer patients: initial study. J Neurosurg 1982;56:241-245.
23. Lundberg N. Continuous recording and control of ventricular fluid pressure in neurosurgical practice. Acta Psychiat Neurol Scand. 1960;36 (suppl 149):1-193.
24. Lundberg N, Troupp H and Lorin H. Continuous recording of the ventricular fluid pressure in patients with severe acute traumatic brain injury. J Neurosurg 1965;22:581-590.
25. Marmarou A and Shulman K. Pressure-Volume Relationships Ð Basic Aspects. In: McLaurin RL ed. Head Injuries: Chicago Symposium on Neurological Trauma. 2nd ed. New York, San Francisco, London: Grune and Stratton, 1976; 233-236.
26. Marsh P. Nursing implications of a new system of intracranial pressure monitoring. BNI Quarterly 1989;5:35-38.
27. Marshall LF, Smith RW and Shapiro HM. The outcome with aggressive treatment in severe head injuries. Part I. The significance of intracranial pressure monitoring. J Neurosurg 1979;50:20-25.
28. Mayhall CG, Archer NH, Lamb VA, Spaeora AC, Daggett JW, Ward JD and Narayan RK. Ventriculostomy-Related Infections. A prospective epidemiologic study. New Engl J Med 1984;310-553-559.
29. McCallum J, Maroon JC, and Janetta PJ. Treatment of postoperative cerebrospinal fluid fistula by subarachnoid drainage. J Neurosurg 1975;2:434-437.
30. Mendelow AD, Rowan JO, Murray L and Kerr AE. A clinical comparison of subdural screw pressure measurements with ventricular pressure. J Neurosurg 1983;58:45-50.
31. Mickell JJ, Reigel DH, Cook DR, Binda RE and Safer P. Intracranial pressure monitoring and normalization therapy in infants. Pediatrics 1977;59:606-613.
32. Miller JD, Becker DP, Ward JD, Sullivan HG, Adams WE and Rosner MD. Significance of intracranial hypertension in severe head injury. J Neurosurg 1977;47:503-516.
33. Miller JD, Butterworth JF, Gudeman SK, Faulkner JE, Choi SC, Selhorst JB, Harbison JW, Lutz HA, Young HF and Becker DP. Further experience in the management of severe head injury. J Neurosurg 1981;54:289-299.
34. Miller JD, Garibi J and Pickard JD. Induced changes in cerebrospinal fluid volume. Effects during continuous monitoring of ventricular fluid pressure. Arch Neurol 1973;28:265-269.
35. Miller JD and Pickard JD. Intracranial volume pressure studies in patients with head injury. Injury 1974;5:265-268.
36. Mingrino S and Scanarini M. Treatment of pseudo-tumoral encephalopathy. Acta Neurochir 1978;44:257-258.
37. Mingrino S, Scanarini M, and dÕAvella D. Benign intracranial hypertension: therapeutical approach and pathophysiological implications. In: Intracranial Pressure V, IV. Springer-Verlag, 1980; 544-549.
38. Murphy TM. Spinal, epidural and caudal anesthesia. In: Miller RD, Churchill L ed. Anesthesia. 2nd ed. New York, Edinburgh, London, Melbourne: 1986;1061-1111.
39. Rosner MD and Becker DP. ICP monitoring: Complications and associated factors. Clin Neurosurg 1976;23:494-519.
40. Saul TG and Ducker TB. Effect of intracranial pressure monitoring and aggressive treatment on mortality in severe head injury. J Neurosurg 1982;56:498-503.
41. Scanarini M and Mingrino S. ICP recording in non-tumoral aqueduct stenosis (50 patients). Abstract presented at International Symposium on ICP Ð Glasgow: June 1985.

Questions? Contact FDA/CDRH/OCE/DID at CDRH-FOISTATUS@fda.hhs.gov or 301-796-8118

Records processed under FOIA Request 2013-6292; Released 10/17/14

42. Shaywitz BA, Leventhal JM, Kramer MS and Venes JL. Prolonged continuous monitoring of intracranial pressure in severe Reyes syndrome. Pediatrics 1977;59:595-605.
43. Smith RW and Alksne JF. Infections complicating the use of external ventriculostomy. J Neurosurg 1976;44:567-570.
44. Swann LW and Cosman ER. Modification of the Richmond subarachnoid screw for monitoring intracranial pressure. Technical note. J Neurosurg 1984;60: 1102-1103.
45. Symon L and Dorsch NWC. Use of long-term intracranial pressure measurement to assess hydrocephalic patients prior to shunt surgery. J Neurosurg 1975;42: 258-272.
46. Tarlov E. Intracranial pressure measurement: Current techniques and role in clinical management. In: Schmidek HH and Sweet WG ed. Current Techniques in Operative Neurosurgery. New York, San Francisco and London: Grune and Stratton, 1978; 67-86.
47. Tomei G, Gaini SM, Rampini P, Villani R and Beretta L. Some observations on the relationship between cerebral pulse amplitude and ICP in patients with intracranial hypertension. Abstract presented at International Symposium on ICP Ð Glasgow: June 1985.
48. Turner JM and McDowall DG. The measurement of intracranial pressure. Brit J Anaesth 1976;48:735-740.
49. Vries JK, Becker DP, and Young HF. A subarachnoid screw for monitoring intracranial pressure. J Neurosurg 1973;39:416-419.
50. Whittle IR, Johnston IH and Besser M. Intracranial pressure changes in arrested hydrocephalus. J Neurosurg 1985;62: 77-82.
51. Tomei G, Gaini SM, Granata G, Rampini P, Sganzerla E, Giovanelli M and Villani R. ICP monitoring in spontaneous intracerebral hematomas. A preliminary report in 28 cases. Phronesis 1983;4N:49-53.
52. Tomei G, Gaini SM, Rampini P, Sganzerla E, Granata G, Sironi V, Zavanone M and Signoroni G. Some observations in ICP behavior in severe traumatic coma failure in controlling extreme ICP elevations. Advances in Neuro-Traumatology. Excerpta Medica, Int Congress SE, 1983;612:325-327.
53. Vourch G. Continuous cerebrospinal fluid drainage by indwelling spinal catheters. Brit J Anaesth 1963;35:118-120.
54. Wilkinson HA, Yarzebski J, Wilkinson EC and Anderson FA. Erroneous measurement of intracranial pressure caused by simultaneous ventricular drainage: A hydrodynamic model study. Neurosurgery 1989;24:348-354.

Copies of Literature may be made available by Medtronic PS Medical.

Questions? Contact FDA/CDRH/OCE/DID at CDRH-FOISTATUS@fda.hhs.gov or 301-796-8118

Records processed under FOIA Request 2013-6292; Released 10/17/14

ATTACHMENT 1

Draft Product Labeling and

Product Package Insert

Questions? Contact FDA/CDRH/OCE/DID at CDRH-FOISTATUS@fda.hhs.gov or 301-796-8118

Records processed under FOIA Request 2013-6292; Released 10/17/14

INSTRUCTIONS FOR USE/GEBRUIKSAANWIJZING/MODE D'EMPLOI/GEBRAUCHSANWEISUNG
ISTRUZIONI PER L'USO/INSTRUCCIONES DE USO/BRUKSINSTRUKTIONER

Becker® EXTERNAL DRAINAGE AND MONITORING SYSTEM
Becker EXTERN DRAINAGE – EN BEWAKINGSSYSTEEM
SYSTÈME EXTERNE DE DRAINAGE ET DE SURVEILLANCE Becker
Becker EXTERNES DRAINAGE – UND ÜBERWACHUNGSSYSTEM
SISTEMI Becker DI DRENAGGIO ESTERNO E DI MONITORAGGIO
SISTEMA EXTERNO DE DRENAJE Y MONITOREO Becker
Becker SYSTEM FÖR EXTERN DRÄNERING OCH ÖVERVAKNING

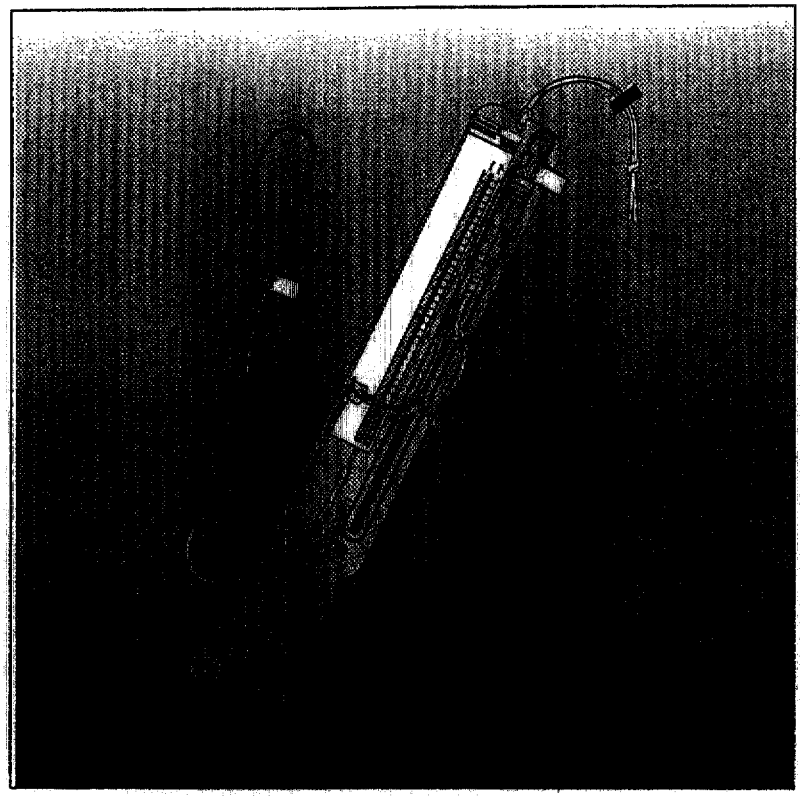

Medtronic

Questions? Contact FDA/CDRH/OCE/DID at CDRH-FOISTATUS@fda.hhs.gov or 301-796-8118

Records processed under FOIA Request 2013-6292; Released 10/17/14

Becker® is a registered trademark of Medtronic, Inc.
Becker is een wetig gedeponeerd handelsmerk van Medtronic, Inc.
Becker est une marque déposée de Medtronic, Inc.
Becker ist ein eingetragenes Warenzeichen der Medtronic, Inc.
Becker è un March reistrato della Medtronic, Inc.
Becker es una marca de registrada de Medtronic, Inc.
Becker är ett registrerat varumärke för Medtronic, Inc.

Questions? Contact FDA/CDRH/OCE/DID at CDRH-FOISTATUS@fda.hhs.gov or 301-796-8118

Records processed under FOIA Request 2013-6292; Released 10/17/14

Becker® External Drainage and Monitoring System

Table of Contents

Description	4
Indications	4
Instructions for Use	4
How Supplied	12
Special Order Products	12
Contraindications	12
Patient Education	12
Warnings and Precautions	12
Complications	13
Returned Goods Policy	13
Warranty	13
Bibliography	90

Questions? Contact FDA/CDRH/OCE/DID at CDRH-FOISTATUS@fda.hhs.gov or 301-796-8118

Records processed under FOIA Request 2013-6292; Released 10/17/14

Description

The Becker External Drainage and Monitoring System (Becker EDMS) provides the physician with a complete closed system for:

1. Draining cerebrospinal fluid (CSF) from the lateral ventricles of the brain or the lumbar subarachnoid space.
2. Monitoring CSF pressure and flow rate from the lateral ventricles of the brain and the lumbar subarachnoid space.

The Becker EDMS (Fig 1) consists of a nondistensible blue striped (proximal end) patient connection line, patient line stopcock, mounting panel/main system section, two latex-free injection sites and a removable drainage bag with approximate volumetric graduations and microbial filter.

The main system section located on the mounting panel includes:

1. Mounting bracket for height adjustment of system
2. Optional self-adjusting cord with lock for adjustment of system height
3. Main system stopcock with optional transducer attachment location
4. Sliding, graduated, 50 cc flow chamber with drip former and conical bottom, and locking bracket
5. Two drainage line slide clamps for flow monitoring and sampling
6. Small filter vent slide clamp
7. Drainage bag connection line
8. Instructions for use

Indications

Draining and monitoring of CSF flow from the lateral ventricles or lumbar subarachnoid space is indicated in selected patients to:

1. Reduce intracranial pressure (ICP), e.g., pre-, intra- or postoperative;
2. Monitor CSF chemistry, cytology and physiology.
3. Provide temporary CSF drainage in patients with infected cerebrospinal fluid shunts.

Monitoring of intracranial pressure (ICP) is indicated in selected patients with:

1. Severe head injury
2. Subarachnoid hemorrhage graded III, IV or V preoperatively
3. Reyes syndrome or similar encephalopathies
4. Hydrocephalus
5. Intracranial hemorrhage
6. Miscellaneous problems when drainage is to be used as a therapeutic maneuver.

Monitoring can also be used to evaluate the status pre- and postoperatively for space-occupying lesions.

Instructions for Use

Prior to use of the Becker EDMS , it is necessary for the attending physician and other responsible personnel to familiarize themselves with the use and function of the various components of the system. The following guidelines have been prepared by Dr. Donald P. Becker* and his staff.

System Set-Up

The system should be prepared under sterile conditions at least 30 minutes prior to placement of the ventricular catheter or lumbar catheter. The system should be removed from the opened pouch by an attendant wearing a surgical face mask and sterile gloves. Check to ensure that all components are assembled.

CAUTION: CHECK ALL CONNECTIONS TO ENSURE THAT FITTINGS ARE TIGHT AND LEAK-FREE.

A pressure transducer adapter may be attached on the patient line stopcock or on the main system stopcock. See Figures 2 and 3. If electronic pressure monitoring equipment is to be used, attach transducer to transducer adapter located on patient line or main system stopcock.

NOTE: Transducer adapters and transducers are not included with this system.

To attach a pressure transducer adapter at the main system stopcock, remove red end plug. The plug may then be used to cap a secondary inlet on the transducer adapter if necessary. To attach a transducer adapter at the patient line stopcock, remove injection site cap.

The system mounting panel incorporates a hanger hole and braided cord with lock for I.V. pole suspension and a panel bracket for manifold pole clamp mounting if more rigid mounting is desired. Locate the system mounting panel so that the main system stopcock is level with the patient's foramen of Monro or at the level of the exit of the lumbar catheter. Ensure that panel is properly aligned. The pressure head scales found on the panel label are referenced to zero at the main system stopcock. The main system stopcock must be correctly aligned with the patient for accurate pressure monitoring.

*This product was developed in cooperation with Donald P. Becker, M.D., Department of Surgery, Division of Neurosurgery, University of California, Los Angeles School of Medicine, Los Angeles, CA 90024.

102

Questions? Contact FDA/CDRH/OCE/DID at CDRH-FOISTATUS@fda.hhs.gov or 301-796-8118

Records processed under FOIA Request 2013-6292; Released 10/17/14

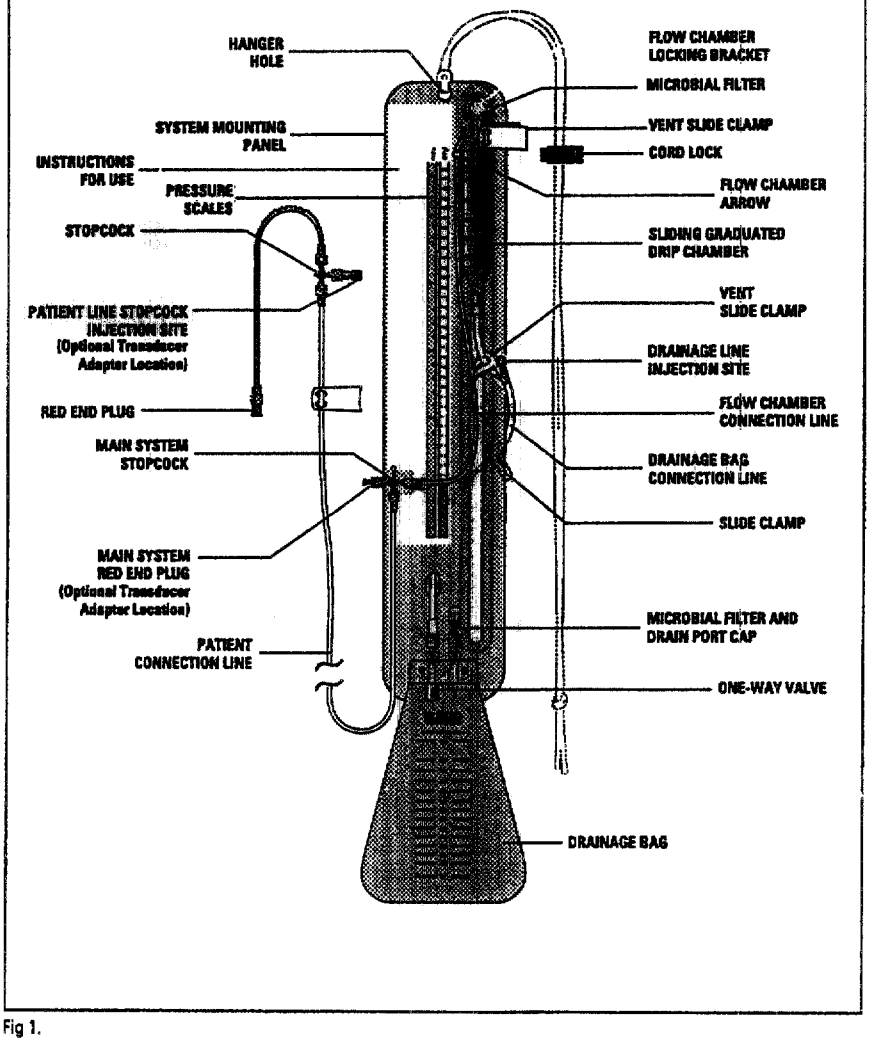

Fig 1.

Questions? Contact FDA/CDRH/OCE/DID at CDRH-FOISTATUS@fda.hhs.gov or 301-796-8118

Records processed under FOIA Request 2013-6292; Released 10/17/14

Pre-Filling the System

The system must be pre-filled to the flow chamber drip former with sterile isotonic saline solution prior to connecting to patient.

Use of a 20 to 30 mL syringe with a 25-gauge needle is recommended.

Inject at patient line stopcock injection site until all air has been flushed from patient line stopcock, patient line, main system stopcock and flow chamber connection line into drip chamber.

Transducer adapter and patient line stopcock, red end plug and injection site fittings may be momentarily loosened to allow air to escape.

Check system for any residual air bubbles. Air can be removed by combined injection of saline and aspiration of air via a 25-gauge needle at injection site on the patient line stopcock.

Ensure that fluid drains from the flow chamber into the drainage bag. It may be necessary to manipulate the drainage bag connection line or drainage bag one-way valve to establish drainage.

To Connect Catheter to System

After the catheter has been properly placed, the luerlock connector is inserted into the catheter. Care should be taken to allow only a minimal amount of CSF to escape. The catheter may be occluded at the scalp level or at lumbar catheter exit site by pinching or with an appropriate clamp to minimize fluid loss during the insertion of the connector.

The separately available Becker EDMS Ventricular Catheter, 20 cm, EDM Lumbar Catheter, 24 cm and EDM Lumbar Catheter, 80 cm include a catheter luerlock connector with an integral molded plug. This plug may be used to plug the catheter prior to connection to the patient line. The EDM Ventricular Catheter, 35 cm includes a separate red end plug to allow temporary closure.

To connect the catheter to the pre-filled system, set the patient line stopcock as shown in Fig 2.3. Remove the red end plug from the patient line.

The catheter should now be occluded with an appropriate clamp (if not already in place) to minimize CSF loss during connection to the system. (Detach the plug from the catheter luerlock connector if used.) Attach luerlock connector to patient line. Care should be taken to ensure that the catheter and complete system is devoid of any air bubbles.

Set the patient line stopcock to the desired setting (see System Control). Remove the clamp from the catheter. The integral molded plug on the catheter luerlock connector should then be removed (cut off).

System Control

To Set Pressure Head

Slide flow chamber arrow to desired pressure setting (in cm H_2O or mm Hg) on system mounting panel. Turn the thumb screw of locking bracket to unlock and lock sliding flow chamber in place.

NOTE: An accurate pressure head is obtained only when the tubing from the patient to the flow chamber drip former is completely fluid filled. If the tubing is not completely fluid filled, the pressure head is equal to (in cm H_2O) the height of the meniscus of the fluid in the tubing, as referenced to the zero level of the system (see "System Setup").

CAUTION: THE FLOW CHAMBER OF THE BECKER EDMS CAN BE POSITIONED BELOW 0 cm H_2O. SUCH POSITIONING WILL RESULT IN A NEGATIVE PRESSURE HEAD, AND MAY RESULT IN OVERDRAINAGE OF CSF IF NOT MONITORED VIGILANTLY.

Questions? Contact FDA/CDRH/OCE/DID at CDRH-FOISTATUS@fda.hhs.gov or 301-796-8118

Records processed under FOIA Request 2013-6292; Released 10/17/14

Patient Line Stopcock

The patient line stopcock is regularly positioned as depicted in Fig 2.

When at "Off" position:

Fig 2.1: Catheter communicates with patient line stopcock and patient line stopcock injection site (or transducer adapter). This is the regular setting for system use.

Fig 2.2: Catheter communicates with the main system stopcock only. Catheter does not communicate with patient line stopcock injection site (or transducer adapter).

Fig 2.3: Catheter communicates with patient line stopcock (or transducer adapter). Catheter does not communicate with main system stopcock.

Fig 2.4: Catheter does not communicate with patient line stopcock (or transducer adapter), or main system stopcock.

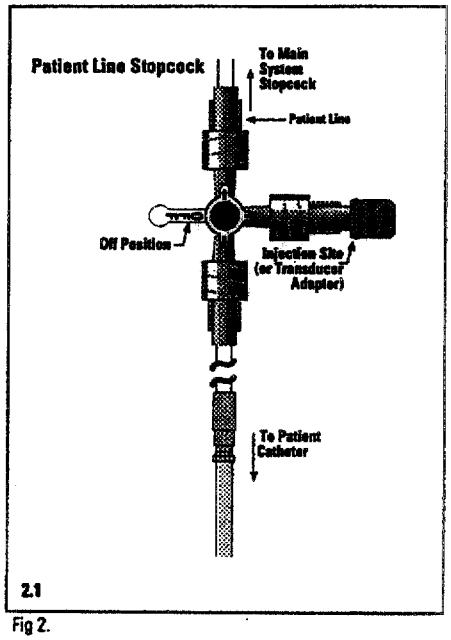

Fig 2.

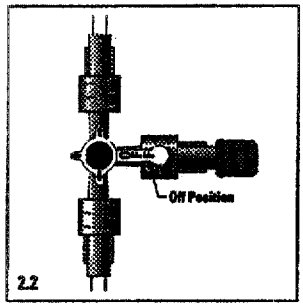

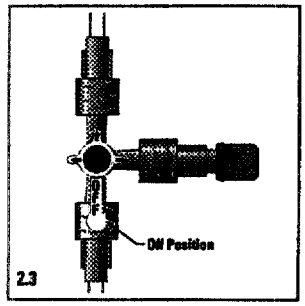

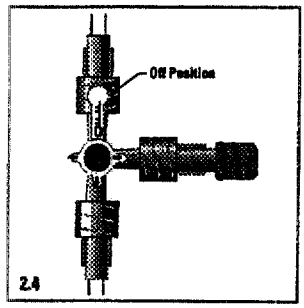

Questions? Contact FDA/CDRH/OCE/DID at CDRH-FOISTATUS@fda.hhs.gov or 301-796-8118

105

Records processed under FOIA Request 2013-6292; Released 10/17/14

Main System Stopcock

The main system stopcock may be positioned as depicted in Fig 3.

When at "Off" position:

Fig 3.1: Patient line communicates with transducer adapter (if connected) and flow chamber. This is the regular setting for system use (drainage).

Fig 3.2: Patient line communicates with transducer adapter (if connected) only. Patient line does not communicate with flow chamber.

Fig 3.3: Patient line communicates with flow chamber only. Patient line does not communicate with transducer adapter.

Fig 3.4: Patient line does not communicate with main system stopcock. Patient line does not communicate with flow chamber.

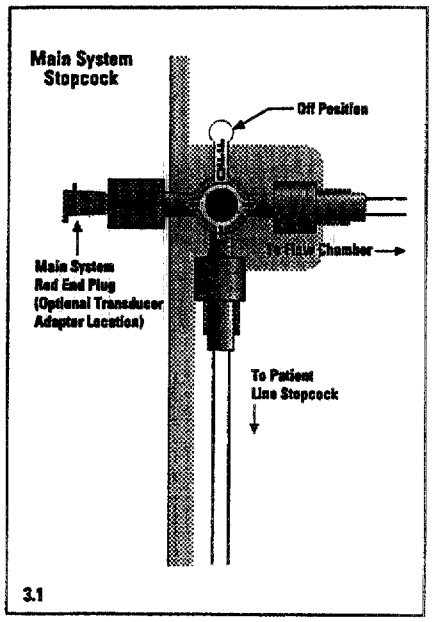

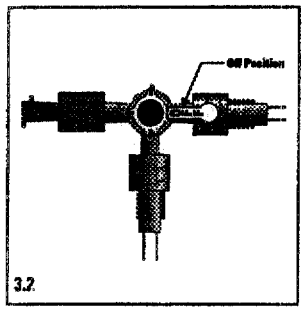

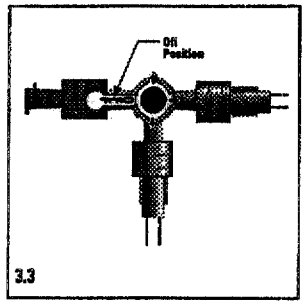

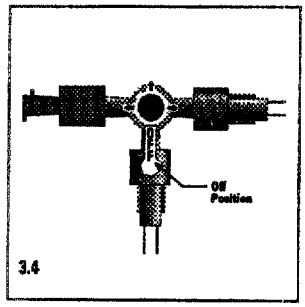

Fig 3.

106

63

Questions? Contact FDA/CDRH/OCE/DID at CDRH-FOISTATUS@fda.hhs.gov or 301-796-8118

Records processed under FOIA Request 2013-6292; Released 10/17/14

Flow Chamber Slide Clamp

The flow chamber will communicate with the drainage bag when both slide clamps are open or loosely positioned. This position is illustrated in Fig 4.1.

The flow chamber will not communicate with the drainage bag when either slide clamp is closed or positioned to compress and securely occlude the drainage bag connection line (Figures 4.2 and 4.3). The slide clamp position shown in Fig 4.2 is used to sample CSF from the flow chamber. The slide clamp position shown in Fig 4.3 is used to monitor the flow rate in the graduated chamber.

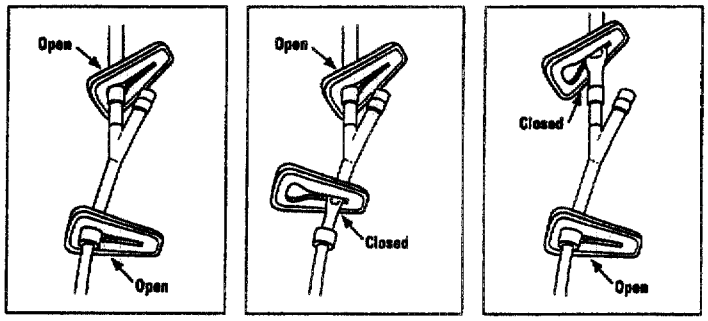

Fig 4.

To Calibrate System

To calibrate the transducer, follow the instructions of the transducer manufacturer.

Initial system calibration should be done prior to connecting system to patient.

The system provides several ways to perform the calibration. The transducer located on the patient line stopcock, or on main system stopcock, may be referenced to atmospheric pressure through the microbial filter on the flow chamber. This can be done to zero the transducer.

The flow chamber connection line may be used as a manometer tube. The transducer is then referenced to the saline solution filled connection line. The saline solution in the connection line can be maintained at a constant height and provides a readily accessible standard pressure against which to calibrate the transducer.

To set the pressure, align the flow chamber inlet tube with the desired pressure setting on the cm H_2O or mm Hg scale. The scale is located on the system mounting panel adjacent to the flow chamber slide. A pressure setting of 27.2 cm H_2O or 20 mm Hg is recommended for transducer calibration.

To Drain CSF

Open patient line stopcock and main system stopcock to allow fluid to flow from the drainage catheter to the flow chamber. Open the proximal drainage line slide clamp and the distal drainage line slide clamp to allow fluid to flow from the flow chamber to the drainage bag.

CAUTION: THE SMALL FILTER VENT SLIDE CLAMP MUST BE OPEN TO PERMIT DRAINAGE OF CSF.

The amount and rate of drainage will be partially dependent on the system pressure head setting (the height of the flow chamber arrow relative to the main system stopcock zero level).

CAUTION: DURING SYSTEM USE WITH THE FLOW CHAMBER SLIDE CLAMP(S) OPEN TO ALLOW FLOW INTO THE DRAINAGE BAG, FLUID MAY ACCUMULATE IN THE FLOW CHAMBER BEFORE EMPTYING. FLOW MUST BE CAREFULLY MONITORED TO PREVENT COMPLETE FILLING OF THE FLOW CHAMBER. IT MAY BE NECESSARY TO MANIPULATE THE DRAINAGE BAG CONNECTION LINE TO RE-ESTABLISH DRAINAGE FROM THE FLOW CHAMBER TO THE DRAINAGE BAG. COMPLETE FILLING OF THE FLOW CHAMBER WILL PRECLUDE DRAINAGE OF CSF DUE TO WETTING OF FILTER VENT.

Questions? Contact FDA/CDRH/OCE/DID at CDRH-FOISTATUS@fda.hhs.gov or 301-796-8118

10 bel

Records processed under FOIA Request 2013-6292; Released 10/17/14

NOTE: When the drainage line slide clamps are open, allowing flow into the drainage bag, a small accumulation of fluid may collect in the flow chamber before emptying. When the periodic fluid accumulation empties, a slight momentary reduction (0 to 4 cm H_2O) in system pressure may occur.

To Monitor Pressure

Position patient line and main system stopcock so that the ventricular catheter or lumbar catheter communicates to transducer adapter.

Simultaneous drainage and pressure monitoring may result in artifacts in measured pressure as described by Wilkinson (54). If more accurate pressure monitoring is desired, the system should be temporarily closed to drainage by adjusting the patient line stopcock (Fig 2.3) or main system stopcock (Fig. 3.2) so that the drainage catheter communicates *only* with the pressure transducer.

CAUTION: IF SYSTEM STOPCOCKS ARE TEMPORARILY CLOSED TO ALLOW FOR MORE ACCURATE PRESSURE MONITORING, CARE MUST BE TAKEN TO ADJUST THE SYSTEM AND RE-ESTABLISH CSF DRAINAGE. FAILURE TO READJUST THE SYSTEM WILL PRECLUDE DRAINAGE OF CSF.

To Monitor Flow

Set patient line stopcock and main system stopcock to allow fluid to communicate to flow chamber. Slide drip chamber up, aligning flow chamber arrow with desired pressure setting.

Close drainage line proximal slide clamp to stop flow to the drainage bag. Record fluid accumulation over time per graduations (in mL) on flow chamber.

CAUTION: WITH THE PROXIMAL DRAINAGE LINE SLIDE CLAMP CLOSED TO MONITOR FLOW, THERE IS NO FLOW INTO THE DRAINAGE BAG. FLOW MUST BE CAREFULLY MONITORED TO PREVENT COMPLETE FILLING OF THE FLOW CHAMBER. COMPLETE FILLING OF FLOW CHAMBER WILL PRECLUDE DRAINAGE OF CSF.

To empty the flow chamber, set main system stopcock to "Off" (see Fig 3.4), then open drainage line slide clamps (see Fig 4.1). When the flow chamber is emptied, reset main system stopcock to desired position (see Fig 3).

CAUTION: FAILURE TO ADJUST MAIN SYSTEM STOPCOCK TO ISOLATE PATIENT FROM FLOW CHAMBER DURING EMPTYING MAY RESULT IN A MOMENTARY REDUCTION IN SYSTEM PRESSURE.

To Flush System

Injection sites may be used to flush the system. Flush fluid into drainage bag.

CAUTION: ADJUST PATIENT LINE OR MAIN SYSTEM STOPCOCK TO ISOLATE PATIENT AND PRESSURE TRANSDUCER. INJURY TO PATIENT AND DAMAGE TO THE TRANSDUCER MAY OCCUR IF THE SYSTEM IS FLUSHED WITH AN OPEN PATH TO PATIENT AND/OR TRANSDUCER.

To Replace Drainage Bag

Close distal drainage line slide clamp to prevent retrograde flow from the drainage bag connection line. Remove the bag from the system mounting panel. Using sterile handling technique to avoid contamination, disconnect the drainage bag connection line from the drainage bag. Discard drainage bag in accordance with hospital medical waste guidelines.

Connect sterile Medtronic PS Medical Drainage Bag to the drainage bag connection line and attach to system mounting panel.

CAUTION: THE DRAINAGE LINE SLIDE CLAMP MUST BE RESET TO OPEN POSITION TO ESTABLISH FLOW INTO THE DRAINAGE BAG. COMPLETE FILLING OF FLOW CHAMBER WILL PRECLUDE DRAINAGE OF CSF DUE TO WETTING OF FILTER.

CAUTION: AVOID TWISTING FLOW CHAMBER CONNECTION LINE DURING BAG REPLACEMENT. THIS MAY CAUSE KINKING.

To Empty Drainage Bag

Center for Disease Control (CDC) guidelines advocate minimizing exposure to body fluids. Therefore, replacement of the drainage bag is recommended by Medtronic PS Medical. However, should the physician choose to empty and reuse the drainage bag, the following method may be used:

1. Remove the bag from the system mounting panel. Do not disconnect the drainage bag from flow chamber connection line.
2. Using sterile handling techniques, disconnect the vented port cap from the luerlock fitting.
3. With careful attention to avoid contamination of the open luerlock fitting, invert bag and empty.
4. Using sterile handling technique replace port cap.
5. Reattach bag to system mounting panel.

108

Questions? Contact FDA/CDRH/OCE/DID at CDRH-FOISTATUS@fda.hhs.gov or 301-796-8118

Records processed under FOIA Request 2013-6292; Released 10/17/14

Irrigation, CSF Sampling and Intraventricular Medication

The system's latex-free injection sites can be used for several purposes. A 25-gauge needle can be inserted through an injection site which has been cleaned and disinfected with alcohol. A clogged ventricular catheter may then be irrigated with 0.1 mL of sterile saline. Similarly, the injection site can be used to withdraw a sample of CSF for laboratory analysis or to inject intraventricular medication.

Volume/Pressure Relationship

A volume/pressure relationship (VPR) can be obtained with the system using the technique described by Miller et al. (32, 33, 34, 35), and Mamarou and Shulman (25). Fill a 1.0 mL syringe with an attached 25-gauge needle with sterile isotonic saline and insert the needle through patient line injection site. Physicians desiring to conduct these studies should be familiar with the techniques as described by Miller et al., and by Mamarou and Shulman.

Moving an EDMS Patient

If it is desired to move a patient who is undergoing external drainage and/or monitoring with a Medtronic PS Medical Becker EDMS , the system should be kept upright and correctly aligned with the patient. If it is not possible for the system to be moved in an upright manner, the following steps must be performed:

1. Ensure that the flow chamber has completely drained.
2. Isolate patient from communication with the flow chamber by:
   a. Adjusting the patient line stopcock to "Off" (Fig 2.3 or 2.4)
   b. Adjusting main system stopcock to "Off" (Fig 3.4)
3. Close small filter vent slide clamp.
4. Move patient and system as required.
5. Realign and readjust system and stopcocks to initiate drainage when patient reaches new location.

CAUTION: ALL STOPCOCKS AND SLIDE CLAMPS ADJUSTED FOR PATIENT TRANSPORT MUST BE RETURNED TO THEIR NORMAL POSITION TO RE-ESTABLISHED PROPER FLOW AND DRAINAGE OF CSF. FAILURE TO PROPERLY RE-ADJUST THE STOPCOCKS AND SLIDE CLAMPS COULD RESULT IN UNDER- OR OVERDRAINAGE OF CSF.

CAUTION: FAILURE TO PERFORM STEPS 1-5 ABOVE, MAY RESULT IN IMPROPER VENTING BY FLOW CHAMBER MICROBIAL FILTER WHEN DRAINAGE IS RE-ESTABLISHED.

Questions? Contact FDA/CDRH/OCE/DID at CDRH-FOISTATUS@fda.hhs.gov or 301-796-8118

109 66

Records processed under FOIA Request 2013-6292; Released 10/17/14

How Supplied

The Medtronic PS Medical Becker EDMS is packaged **sterile** AND **non-pyrogenic** and is intended for **single** (one-time) **use only. DO NOT RESTERILIZE. DISCARD AFTER USE.**

Special Order Products

If this Instructions for Use accompanies a special order product there will possibly be differences in the physical characteristics between the product enclosed and the product description in this data sheet. These differences will not affect the safety or efficacy of the special order product.

Special order products may be supplied **sterile** or **non-sterile** as indicated on the product package label. Non-sterile products must be cleaned and sterilized prior to use.

Contraindications

Intracranial pressure monitoring with a ventricular or lumbar catheter is contraindicated in patients receiving anticoagulants or who are known to have a bleeding diathesis. The use of a ventricular catheter is contraindicated if scalp infection is present. A patient undergoing external drainage and monitoring must be kept under continuous, close supervision. The use of a ventricular or lumbar drainage catheter, or a Becker EDMS, is contraindicated where trained personnel are not available to supervise monitoring and drainage on a 24-hour-a-day basis.

The use of a lumbar catheter for drainage and monitoring of cerebrospinal fluid is not recommended for patients with non-communicating hydrocephalus [1,2]; where lumbar puncture is contraindicated; in the presence of large intracranial mass lesions, tumors, hematomas, or cysts [8]; in the presence of infections in the surrounding area which includes the skin, subcutaneous tissue, bone and the epidural space; and patients which have demonstrated blockage of cerebrospinal fluid to the subarachnoid space due to trauma, hematoma, fracture or tumor. The use of a lumbar catheter under these conditions for external drainage and monitoring is at the discretion of the physician.

Monitoring pressure from the lumbar subarachnoid space can be done only in instances where lumbar puncture does not pose a danger to the patient [8].

Patient Education

It is physician's responsibility to educate the patient and/or their representative(s) regarding external drainage and monitoring. This should include a description of associated complications, and an explanation of potential alternative products and treatments.

Warnings and Precautions

Failure to appropriately adjust the rate of CSF outflow through the external drainage system may result in potentially serious injury to the patient.

Patients undergoing external drainage and/or intracranial pressure monitoring must be kept under constant supervision in an intensive care unit staffed with trained personnel familiar with the use of intracranial and lumbar pressure monitoring techniques. Improper vigilance or improper drainage system setup can lead to overdrainage or underdrainage and potentially serious injury to the patient. Intracranial and lumbar pressure monitoring has been associated with intracranial infection, meningitis and ventriculitis. This hazard has been quoted at less than 1% to more than 5%. The risk of infection is probably influenced both by the number of times a system is opened and by the duration of the monitoring. Prolonged steroid therapy can also increase the risk of infection.

It is possible that the puncture of the ventricle or the opening of the dura will result in an intracranial hemorrhage.

It is possible that if too much CSF is removed from the ventricles, either during a drainage procedure or when the ventricle is first punctured, the ventricle may collapse and occlude the catheter.

It is possible that the monitoring system may give a false pressure reading either due to a pressure line becoming clogged or kinked or from an air bubble lodged in the system. An incorrect pressure reading may lead to the wrong therapy being given to the patient. The irrigation of the catheter or the performance of a VPR study may induce pressure waves in the patient. For this reason, irrigation or VPR studies should be done only by, or on the order of, a physician.

In order to minimize the possibility of infection, meningitis or ventriculitis, several steps should be observed. First, the injection sites should always be cleaned with alcohol and the alcohol allowed to dry before a needle is inserted into them. Second, sterile technique should be observed in setting up the system and in the placement of the catheter. Third, subgaleal tunneling of the ventricular catheter should be approximately one to two inches.

In order to ensure against ventricular collapse and the possible consequence of tentorial herniation, always perform a drainage maneuver against a positive pressure head on the order of 20 cm H_2O or 15 mm Hg. In addition, when the ventricle or lumbar sub-

Questions? Contact FDA/CDRH/OCE/DID at CDRH-FOISTATUS@fda.hhs.gov or 301-796-8118

Records processed under FOIA Request 2013-6292; Released 10/17/14

arachnoid space is first punctured during the insertion of the catheter, care should be taken so as little CSF as possible is lost.

A double suture tie with silk suture should be used to secure the ventricular or lumbar catheter to the connection fitting. Check to ensure that the connection is tight prior to use.

Whenever irrigation of the catheter or the performance of the VPR is decided upon, great care must be used so that pressure waves are not initiated. Only a small volume of saline should ever be injected into the ventricular system, and this only done by, or on the order of, a physician. In general, in monitoring intracranial pressure, one should always be aware of the wave form on the oscilloscope. If the wave form begins to dampen out, it is important that the entire monitoring system be examined. Ensure that the line to the patient is not kinked and that all air bubbles or blood or other debris are removed from the system. Check to ascertain that the transducer is on the same level as the patient's ventricular system to ensure the proper reference level in the manometer tube for use in calibration procedures. Pressure monitoring with the manometer may result in overdrainage of the ventricles.

Complications

One major complication associated with ICP monitoring with a ventricular or lumbar catheter is the risk of infection, particularly meningitis and ventriculitis. The incidence of these infections can be reduced by care in inserting the ventricular catheter and stabilizing it by passing it through a subgaleal tunnel before it emerges. The lumbar catheter should be stabilized by use of fixation tabs. Wound infections may occur but usually subside when the catheter is removed.

A second major complication associated with ventricular or lumbar drainage of CSF is overdrainage, which can lead to intracranial hemorrhage and permanent neurological deficit. Overdrainage can occur due to improper system testing or setup (resulting in system leakage or inappropriate system pressure head heights) or the lack of adequate fluid replacements to the patient.

Limiting the duration of monitoring from a single site to less than five days will reduce the infection rate. If monitoring must continue past five days, consider inserting a new catheter at a fresh site and changing the entire system.

Frequent punctures of the brain to insert the ventricular catheter can predispose to intracerebral hemorrhage and edema causing a further rise in ICP.

Poor recording of ICP will result if the catheter, patient line or other components of the monitoring system become clogged with blood clots, brain tissue fragments, or fibrinous debris.

In patients with small ventricles, the ventricular walls may collapse around the tip of the catheter resulting in obstruction and predisposing to tentorial herniation. It is therefore extremely important to avoid excessive release of CSF before the catheter is attached to the patient line.

Returned Goods Policy

Products must be returned in unopened packages, with manufacturer's seals intact to be accepted for replacement or credit, unless returned due to a complaint of product defect or mislabeling. Determination of a product defect or mislabeling will be made by Medtronic PS Medical, which determination will be final. Products will not be accepted for replacement or credit if they have been in possession of the customer for more than 90 days.

Warranty

A. Standard Limited Warranty. Medtronic PS Medical warrants to the original end user purchaser ("Purchaser") that the enclosed single use product ("Product") purchased by Purchaser, at the time of delivery to Purchaser, shall be substantially free from defects in material and workmanship. Medtronic PS Medical makes no warranty (express, implied or statutory) for Products that are modified (except as expressly contemplated herein) or subjected to unusual physical stress, misuse, improper operation, neglect, improper testing, use in combination with other products or components other than those for which the Products were designed, or use in any manner or medical procedure for which the Products are not indicated.

B. Remedy. Purchaser's exclusive remedy and Medtronic PS Medical's sole liability for breach of the foregoing warranty shall be, at Medtronic PS Medical's sole option and election, to replace the Product or credit Purchaser for the net amount actually paid for any such Product; provided that (i) Medtronic PS Medical is notified in writing within ninety (90) days after Purchaser's receipt of the Product that such Product failed to conform, including a detailed explanation in English of any alleged nonconformity; (ii) such Product is returned to Medtronic PS Medical within ninety (90) days after Purchaser's receipt of the Product F.O.B. 125 Cremona Drive, Goleta, California 93117, U.S.A. or as otherwise designated by Medtronic PS Medical; and (iii) Medtronic PS Medical is reasonably satisfied that the claimed nonconformities actually exist. Except as expressly provided in this paragraph, Purchaser shall not have the right to return Products to Medtronic PS Medical without Medtronic PS Medical's prior written consent.

C. Exclusion of Other Warranties. EXCEPT FOR THE LIMITED WARRANTY PROVIDED IN (A) ABOVE, MEDTRONIC PS MEDICAL GRANTS NO OTHER WARRANTIES OR CONDITIONS, EXPRESS OR IMPLIED AND MANUFACTURER SPECIFICALLY DISCLAIMS THE IMPLIED WARRANTIES AND CONDITIONS OF MERCHANTABILITY AND FITNESS FOR A PARTICULAR PURPOSE. MEDTRONIC PS MEDICAL NEITHER ASSUMES NOR AUTHORIZES ANY OTHER PERSON TO ASSUME ANY OTHER LIABILITIES ARISING OUT OF OR IN CONNECTION WITH THE SALE OR USE OF ANY PRODUCT.

Questions? Contact FDA/CDRH/OCE/DID at CDRH-FOISTATUS@fda.hhs.gov or 301-796-8118

Records processed under FOIA Request 2013-6292; Released 10/17/14

Bibliography/Bibliografie/Bibliographie/ Bibliographie/Bibliographia/Referencias/Litteraturförteckning

1. Barnett, GH, and Chapman, PH: Insertion and Care of Intracranial Pressure Monitoring Devices. 2nd ed., ed. Rapper, HH, and Kennedy, S.F., - *Aspen Publication*, Rockville, MD; Ch. 4, pp. 43-59; 1988.
2. Becker, DP, Miller, JD, Ward, JD, Greenberg, RP, Young, HF and Sakalas, R: The outcome from severe head injury with early diagnosis and intensive management. *J. Neurosurg.* 47:491-502; 1977.
3. Becker, DP, Vries, JK, Sakalas, R, Young, HF and Ward, J: Early prognosis in head injury based on motor posturing, oculocephalic reflexes and intracranial pressure. In "Head Injuries," ed. McLaurin, RL, Grune and Stratton, Inc. New York, San Francisco, London; 1970.
4. Becker, DP, Young, HF, Vries, JK and Sakalas, R: Monitoring in patients with brain tumors. *Clin. Neurosurg.* 22:364-388; 1975.
5. Bogdahn, U, Lau, W, Hasset, W, Gunreben, G, Mertens, HG, Brawanski, A: Continuous-pressure controlled, external ventricular drainage for treatment of acute hydrocephalus — evaluation of risk factors. *Neurosurgery.* 31:898-904; 1992.
6. Bruce, DA, Barman, WA and Schut, L: Cerebrospinal fluid pressure monitoring in children: Physiology, pathology and clinical usefulness. In "Advances in Pediatrics," v. 24, ed. Barnes, *LA Year Book Medical Publishers, Inc.*, Chicago; 1977.
7. Bruce, DA, Miller, JD, Langfitt, TW, Goldberg, HI, Stanek, AE and Vapalahti, M: CSF and intracranial pressure in comatose patients. *European Neurol.* 8:200-208; 1972.
8. Bruce, DA, Schut, L, Bruno, LA, Wood, JH and Sutton, LN: Outcome following severe head injuries in children. *J. Neurosurg.* 48:679-688; 1978.
9. Cooper, Paul, R: Post-Traumatic Intracranial Mass Lesions, 11:185-231. In "Head Injury," ed. Cooper, *PR Williams and Wilkins*, Baltimore, London; 1982.
10. d'Avella, D, Scanarino, M, Zuccarello, M and Mingrino, S: The value of continuous subarachnoid monitoring of ICP with reference to the leakage of CSF. *Neurochirurgia*, 24:8-9; 1981.
11. Findler, G, Sahar, A and Beller, AJ: Continuous lumbar drainage of cerebrospinal fluid in neurosurgical patients. *Surg. Neurol.* 8:455-457; 1977.
12. Fleischer, AS, Nettleton, SP and Tindall, GT: Continuous monitoring of intracranial pressure in severe closed head injury without mass lesions. *Surg. Neurol.* 8:30-34; 1978.
13. Gennarelli, TA Pastuszko, M, Sakamoto, T, Duhaine, C and Tomei, G: ICP after diffuse head injuries. Abstract presented at International Symposium on ICP – Glasgow, Scotland, June 1985.
14. Guillaume, J and Janny, P: Manometrie intracranienne continue. *Rev. Neurol.* 84:131-142; 1957.
15. Haan, J and Thomeer, RTWM: Predictive value of temporary external lumbar drainage in normal pressure hydrocephalus. *Neurosurgery* 22:388-391; 1988.
16. James, HE, Bruno, L and Schut, L: Intracranial subarachnoid pressure monitoring in children. *Surg. Neurol.* 3:313-315; 1975.
17. James, HD, Bruno, L, Shapiro, H, Levitt, JD, Aidinis, S, Langfitt, TW and Shaine, E: Methodology for intraventricular and subarachnoid continuous recording of intracranial pressure in clinical practice. *Acta Neurochir.* 33:45-51; 1976.
18. James, HE, Langfitt, TW, Kumar, VS and Ghostine, SY: Treatment of intracranial pressure. Analysis of 105 consecutive, continuous recordings of intracranial pressure. *Acta Neurochir.* 36:189-200; 1977.
19. Johnson, M and Quinn, J: The subarachnoid-screw. Amer. *J. Nursing* 77:448-450; 1977.
20. Johnston, IH, Johnston, JA and Jennett, B: Intracranial-pressure changes following head injury. *Lancet* 2:433-436; 1970.
21. Kindt, GW and Kahn, EA: Expanding lesions of the brain and increased intracranial pressure. In "Correlative Neurosurgery," VI, ed. 3 (1982), ed. by Schneider, RC, Kahn, EA, Crosby, EC and Taren, JA: CC Thomas, Springfield, IL, pp. 3-21.
22. Langfitt, TW: Pathophysiology of increased ICP. In "Intracranial Pressure. Experimental and Clinical Aspects," ed. Brock, M and Dietz, H, Springer-Verlag, Berlin, pp. 361-364; 1972.
23. Langfitt, TW: Measuring the outcome from head injuries. *J. Neurosurg.* 48:673-678; 1978.
24. Leavens, ME, et al.: Intrathecal and intraventricular morphine for pain in cancer patients: initial study. *J. Neurosurg.* 58:241-245; 1982.
25. Lundberg, N: Continuous recording and control of ventricular fluid pressure in neurosurgical practice. *Acta Psychiat. Neurol.* Scand. 36 (Suppl. 149): 1-193; 1960.
26. Lundberg, N, Troupp, H and Lorin, H: Continuous recording of the ventricular fluid pressure in patients with severe acute traumatic brain injury. J. *Neurosurg.* 22:581-590; 1965.
27. Marmarou, A and Shulman, K: Pressure-Volume Relationships – Basic Aspects. In "Head Injuries: Chicago Symposium on Neurological Trauma." 2nd ed., ed. McLaurin, RL, Grune and Stratton, New York, San Francisco, London, pp. 233-236; 1976.
28. Marsh, P: Nursing implications of a new system of intracranial pressure monitoring. *BNI Quarterly.* 5:35-38; 1989.
29. Marshall, LF, Smith, RW and Shapiro, HM: The outcome with aggressive treatment in severe head injuries. Part I. The significance of intracranial pressure monitoring. *J. Neurosurg.* 50:20-25; 1979.
30. Mayhall, CG, Archer, NH, Lamb, VA, Spaeora, AC, Daggett, JW, Ward, JD and Narayan, RK: Ventriculostomy-Related Infections. A prospective epidemiologic study. *New Engl. J. Med.* 310-553-559; (Mar.) 1984.
31. McCallum, J, Maroon, JC, and Janetta, PJ: Treatment of postoperative cerebrospinal fluid fistula by subarachnoid drainage. *J. Neurosurg.* 42:434-437; 1975.
32. Mendelow, AD, Rowan, JO, Murray, L and Kerr, AE: A clinical comparison of subdural screw pressure measurements with ventricular pressure. *J. Neurosurg.* 58:45-50; 1983.

Questions? Contact FDA/CDRH/OCE/DID at CDRH-FOISTATUS@fda.hhs.gov or 301-796-8118

Records processed under FOIA Request 2013-6292; Released 10/17/14

33. Mickell, JJ, Reigel, DH, Cook, DR, Binda, RE and Safer P: Intracranial pressure monitoring and normalization therapy in infants. *Pediatrics* 59:606-613; 1977.

34. Miller, JD, Becker, DP, Ward, JD, Sullivan, HG, Adams, WE and Rosner, MD: Significance of intracranial hypertension in severe head injury. *J. Neurosurg.* 47:503-516; 1977.

35. Miller, JD, Butterworth, JF, Gudeman, SK, Faulkner, JE Choi, SC, Selhorst, JB, Harbison, JW, Lutz, HA, Young , HF and Becker, DP: Further experience in the management of severe head injury. *J. Neurosurg.* 54:289-299; 1981.

36. Miller, JD, Garibi, J and Pickard, JD: Induced changes in cerebrospinal fluid volume. Effects during continuous monitoring of ventricular fluid pressure. *Arch. Neurol.* 28:265-269; 1973.

37. Miller, JD and Pickard, JD: Intracranial volume pressure studies in patients with head injury. *Injury* 5:265-268; 1974.

38. Mingrino, S and Scanarini, M: Treatment of pseudo-tumoral encephalopathy. *Acta Neurochir.* 44:257-258; 1978.

39. Mingrino, S, Scanarini, M, and d'Avella, D: Benign intracranial hypertension: therapeutical approach and pathophysiological implications. *Intracranial Pressure*, V, IV, Springer-Verlag, 1980, pp. 544-549.

40. Murphy, TM: Spinal, epidural and caudal anesthesia. In "Anesthesia," ed. 2, ed. by Miller, RD Churchill Livingstone. New York, Edinburgh, London, Melbourne, pp. 1061-1111; 1986.

41. Reedy, EB: Advanced Neurological and Neurosurgical Nursing. W Mosby Co, St. Louis, Ch. 3, pp. 115-159; 1984.

42. Rosner, MD and Becker, DP: ICP monitoring: Complications and associated factors. *Clin. Neurosurg.* 23:494-519; 1976.

43. Saul, TG and Ducker, TB: Effect of intracranial pressure monitoring and aggressive treatment on mortality in severe head injury. *J. Neurosurg.* 56:498-503; 1982.

44. Scanarini, M and Mingrino, S: ICP recording in non-tumoral aqueduct stenosis (50 patients). Abstract presented at International Symposium on ICP – Glasgow, Scotland, June 1985.

45. Scheinblum, ST, Hammond, M: The treatment of children with shunt infections: extraventricular drainage system care. *Pediatric Nursing* 16:139-143; 1990.

46. Shapiro, SA, and Scully, T: Closed continuous drainage of cerebrospinal fluid via a lumbar subarachnoid catheter for treatment or prevention of cranial/spinal cerebrospinal fluid fistula. *Neurosurgery* Vol. 30, No. 2:241; 1992

47. Shaywitz, BA, Leventhal, JM, Kramer, MS and Venes, JL: Prolonged continuous monitoring of intracranial pressure in severe Reyes syndrome. *Pediatrics* 59:595-605; 1977.

48. Smith, RW and Alksne, JF: Infections complicating the use of external ventriculostomy. *J. Neurosurg.* 44:567-570; 1976.

49. Swann, LW and Cosman, ER: Modification of the Richmond subarachnoid screw for monitoring intracranial pressure. Technical note. *J. Neurosurg.* 60: 1102-1103; 1984.

50. Symon, L and Dorsch, NWC: Use of long-term intracranial pressure measurement to assess hydrocephalic patients prior to shunt surgery. *J. Neurosurg.* 42:258-272; 1975.

51. Tarlov, E: Intracranial pressure measurement: Current techniques and role in clinical management. In *"Current Techniques in Operative Neurosurgery,"* ed. Schmidek, HH and Sweet, WG, Grune and Stratton, New York, San Francisco and London, Chapter 7, pp. 67-86; 1978.

52. Tomei, G, Gaini, SM, Rampini, P, Villani, R and Beretta, L: Some observations on the relationship between cerebral pulse amplitude and ICP in patients with intracranial hypertension. Abstract presented at International Symposium on ICP – Glasgow, Scotland, June 1985.

53. Tomei, G, Gaini, SM, Granata, G, Rampini, P, Sganzerla, E, Giovanelli, M and Villani, R: ICP monitoring in spontaneous intracerebral hematomas. A preliminary report in 28 cases. *Phronesis*, Vol. 4N, 49-53, Jan 1983.

54. Tomei, G, Gaini, SM, Rampini, P, Sganzerla, E, Granata, G, Sironi, V, Zavanone, M and Signoroni, G: Some observations in ICP behavior in severe traumatic coma failure in controlling extreme ICP elevations. Advances in Neuro-Traumatology, Excerpta Medica, Int. Congress SE., 612, 325-327; 1983.

55. Turner, JM and McDowall, DG: The measurement of intracranial pressure. *Brit. J. Anaesth.* 48:735-740; 1976.

56. Vries, JK Becker, DP, and Young, HF: A subarachnoid screw for monitoring intracranial pressure. *J. Neurosurg.* 39:416-419; 1973.

57. Whittle, IR, Johnston, IH and Besser, M: Intracranial pressure changes in arrested hydrocephalus. *J. Neurosurg.* 62: 77-82; 1985.

58. Vourch, G: Continuous cerebrospinal fluid drainage by indwelling spinal catheters, *Brit. J. Anaesth.* 35:118-120; 1963.

59. Wilkins, HA: Head Injury. Ed. Cooper, *PR, Williams and Wilkins*, Baltimore, London; Ch. 10, pp. 147-184; 1982.

60. Wilkinson, HA, Yarzebski, J, Wilkinson, EC and Anderson, FA: Erroneous measurement of intracranial pressure caused by simultaneous ventricular drainage: A hydrodynamic model study. *Neurosurgery*, Vol. 24, No. 3:348-354; 1989.

61. Wisinger, D, Mest-Beck, L: Ventriculostomy: A guide to nursing management. *Journal of Neuroscience Nursing*, Vol. 22, No. 6:365-369; 1990.

62. Zeidelman, C: Increased intracranial pressure in the pediatric patient: Nursing assessment and intervention. *Journal of Neuroscience Nursing*, Vol. 12, No. 1:7-10; 1980.

Questions? Contact FDA/CDRH/OCE/DID at CDRH-FOISTATUS@fda.hhs.gov or 301-796-8118

Records processed under FOIA Request 2013-6292; Released 10/17/14

Authorized EC-representative:
Medtronic B.V.
Wenckebachstraat 10
6466 NC Kerkrade
The Netherlands

Manufacturer:
Medtronic, Inc.
7000 Central Ave NE
Minneapolis, MN 55432 USA

Medtronic

Design & Manufacturing Facility:
Medtronic PS Medical
125 Cremona Drive
Goleta, California 93117-5500 USA
(800) 826-5603 USA/Canada
(805) 968-1546 International
(805) 968-6889 FAX

11179-2B 4885
© Medtronic, Inc. 1996
All Rights Reserved
Printed in USA

Questions? Contact FDA/CDRH/OCE/DID at CDRH-FOISTATUS@fda.hhs.gov or 301-796-8118

Records processed under FOIA Request 2013-6292; Released 10/17/14

STERILE EO

Becker® External Drainage and Montioring System

Medtronic Medtronic, Inc., Minneapolis, MN 55432

REF 46128 LOT

CAUTION: U.S. federal law restricts this device to sale by or on the order of a physician. ATTENTION: Volgens de federale wetten van de Verenigde Staten mag dit product enkel door of op voorschrift van een arts worden verkocht. ATTENTION: Selon la loi fédérale des États-Unis, ce dispositif ne peut être vendu que par un médecin ou sur l'ordre d'un médecin. ACHTUNG: Gemäß dem amerikanischen Bundesgesetz darf dieses Instrument durch oder auf Anordnung eines Arztes. ATTENZIONE: La legge federale statunitense limita la vendita di questo dispositivo da parte o su ordinazione di un medico. ATENCIÓN: La legislación federal de EE.UU. restringe la venta de este dispositivo a los médicos o por orden de estos. VARNING: Federalregeln i U.S.A. begränsar försäljningen av den till läkare eller till förskrivning på läkares föreskrifter.

Medtronic STERILE EO

Medtronic PS Medical 125 Cremona Drive • Goleta • CA • 93117 • USA

REF 46128 LOT

Package contents:	*Inhoud van de verpakking:*
Becker® External Drainage and Monitoring System	
Contenu du paquet:	*Lieferumfang:*
Contenuto della confezione:	*Contenido del paquete:*
Förpackningens innehåll:	

Questions? Contact FDA/CDRH/OCE/DIDSR-STATUS@fda.hhs.gov or 301-796-8118

Records processed under FOIA Request 2013-6292; Released 10/17/14

STERILE EO

Becker® External Drainage and Monitoring System

REF 46128 LOT

Medtronic

Medtronic PS Medical 125 Cremona Drive • Goleta • CA • 93117 • USA

Made in the USA. In USA verwendet, Fabricado aus Estados-Unidos. Hergestellt in USA. Fabbricato negli USA. Hecho en EE.UU. Tillverkad i Förenta Staterna.

13345-1A 13119-1A

XXXX 5495

Questions? Contact FDA/CDRH/OCE/DID at CDRH-FOISTATUS@fda.hhs.gov or 301-796-8118

Records processed under FOIA Request 2013-6292; Released 10/17/14

STERILE EO

Becker® EDMS Drainage Bag, 700 mL

Medtronic Medtronic, Inc., Minneapolis, MN 55432

REF 46124 LOT

CAUTION: U.S. federal law restricts this device to sale by or on the order of a physician. OPGELET: Volgens de federale wetten van de Verenigde Staten mag dit product enkel door of op voorschrift van een arts worden verkocht. ATTENTION: Selon la loi fédérale des Etats-Unis, ce dispositif ne peut être vendu que par un médecin ou sur l'ordre d'un médecin. ATTENZIONE: La legislazione federale degli Stati Uniti consente la vendita di questo dispositivo solo da parte o su ordinazione di un medico. ATENCIÓN: La legislación federal de EE.UU. restringe la venta de este dispositivo a los médicos o por orden de ellos. VARNING: Nämnda lagstiftning i U.S.A. begränsar försäljningen av den här produkten till läkare eller till förskrivning på läkares föreskrift.

Medtronic STERILE EO

Medtronic PS Medical 125 Cremona Drive • Goleta • CA • 93117 • USA

REF 46124 LOT

Package contents:	*Inhoud van de verpakking:*
Drainage Bag Bag Cord	
Contenu du paquet:	*Lieferumfang:*
Contenuto della confezione:	*Contenido del paquete:*
Förpackningens innehåll:	

Questions? Contact FDA/CDRH/OCE/DID-ST-STATUS@fda.hhs.gov or 301-796-8118

Records processed under FOIA Request 2013-6292; Released 10/17/14

STERILE EO

Becker® EDMS Drainage Bag, 700 mL

REF 46124 LOT

Medtronic

Medtronic PS Medical 125 Cremona Drive • Goleta • CA • 93117 • USA

Made in the USA, in USA verwendet, Fabriqué aux États-Unis, Hergestellt in USA, Fabbricato negli USA, Hecho en EE.UU. Tillverkad i Förenta Staterna.

13350-1A 13118-1A

XXXX 5486

Questions? Contact FDA/CDRH/OCE/DID at CDRH-FOISTATUS@fda.hhs.gov or 301-796-8118

Records processed under FOIA Request 2013-6292; Released 10/17/14

STERILE EO

EDM Patient Connection Line Assembly

Medtronic

Medtronic, Inc., Minneapolis, MN 55432

REF 46126 LOT

CAUTION: U.S. federal law restricts this device to sale by or on the order of a physician. OPGELET: Volgens de federale wetten van de Verenigde Staten mag dit product enkel door of op voorschrift van een arts verkocht worden. ATTENTION: Selon la loi fédérale des États-Unis, ce dispositif ne peut être vendu que par un médecin ou sur l'ordre d'un médecin. ACHTUNG: Gemäß Bundesgesetz des Verbund dieses Instrument durch oder auf Anordnung eines Arztes. ATTENZIONE: La legge federale americana limita la vendita di questo dispositivo da parte o su ordinazione di un medico. ADVERTENCIA: La legislación federal en EE.UU. restringe la venta de este dispositivo a los médicos o por orden de éstos. WARNING: Kliniekvoorschriften in U.S.A. hebben betrekking op deze site-voorwaarden. Bij Uitsluiting gelden Klinische Richtlijnen.

Medtronic STERILE EO

Medtronic PS Medical 125 Cremona Drive • Goleta • CA • 93117 • USA

REF 46126 LOT

Package contents:	*Inhoud van de verpakking:*
Patient Connection Line Stopcock Injection Site Male/Female Red End Plug	
Contenu du paquet:	*Lieferumfang:*
Contenuto della confezione:	*Contenido del paquete:*
Förpackningens innehåll:	

Questions? Contact FDA/CDRH/OCE/DIL [illegible] ATUS@fda.hhs.gov or 301-796-8118

119

96

Records processed under FOIA Request 2013-6292; Released 10/17/14

STERILE EO

EDM Patient Connection Line Assembly

REF 46126 LOT

Medtronic

Medtronic PS Medical 125 Cremona Drive • Goleta • CA • 93117 • USA

Made in the USA, in USA verwendbar. Fabriqué aux États-Unis. Hergestellt in USA. Fabbricato negli USA. Hecho en EE.UU. Tillverkad i Förenta Staterna.

13345-1A 13118-1A

XXXX 5495

Questions? Contact FDA/CDRH/OCE/DID at CDRH-FOISTATUS@fda.hhs.gov or 301-796-8118

Records processed under FOIA Request 2013-6292; Released 10/17/14

ATTACHMENT 2

Product Literature for the

Codman External Drainage System II
K902257, K920938

Questions? Contact FDA/CDRH/OCE/DID at CDRH-FOISTATUS@fda.hhs.gov or 301-796-8118

Records processed under FOIA Request 2013-6292; Released 10/17/14

Codman

CODMAN®
External Drainage System II

CODMAN
External Drainage System II
Collection Bag
with Tubing

Johnson & Johnson
PROFESSIONAL, INC.
RAYNHAM, MA 02767-0350 USA (800) 526-2459

Authorized European Representative
Vertreter für Europa
Représentant agréé pour l'Europe
Representante autorizado en Europa
Rappresentante autorizzato per l'Europa
Representante autorizado na Europa

Codman
Johnson & Johnson

Johnson & Johnson Professional Products Ltd.
London Road
Bracknell
Berkshire RG12 2AT
United Kingdom

LCN 169847/E
© 1994 Johnson & Johnson Professional, Inc.
Printed in USA 6/94

Questions? Contact FDA/CDRH/OCE/DID at CDRH-FOISTATUS@fda.hhs.gov or 301-796-8118

Records processed under FOIA Request 2013-6292; Released 10/17/14

Questions? Contact FDA/CDRH/OCE/DID at CDRH-FOISTATUS@fda.hhs.gov or 301-796-8118

Records processed under FOIA Request 2013-6292; Released 10/17/14

[redacted]

IMPORTANT INFORMATION
Please Read Before Use

CODMAN External Drainage System II
CODMAN External Drainage System II Collection Bag With Tubing

STERILE	EO

Sterile — Ethylene Oxide

Indications
Use of the CODMAN External Drainage System II is indicated for draining cerebrospinal fluid (CSF) and other fluids of similar physical characteristics as a means of reducing and controlling increased intracranial volume and pressure when the insertion of a permanent, internal shunt is not indicated.[1-4]

Description
The External Drainage System II (catalog no. 82-1720), Figure 1, consists of:

- a 35 cm (13.8 in.) radiopaque silicone ventricular catheter (1.5 mm I.D., 3.1 mm O.D.);
- a 36 cm straight stainless steel stylet for catheter placement;
- a curved stainless steel trocar with a barbed end for drawing the catheter subcutaneously;
- a female LUER-LOK® connector and LUER-LOK cap to connect the distal end of the catheter;
- doubled 24" string with CORD-LOC® locking mechanism;
- a 27 cm measuring backboard (incorporated in the thermoformed tray) for regulating intracranial pressure (ICP) with mm Hg conversion, and multilingual instructions;
- a 75 ml drip chamber equipped with an antireflux valve and sterile atmospheric vent;
- a 157 cm (62 in.) patient line equipped with two clamps;
- two four-way stopcocks each with a female LUER-LOK port for monitoring;
- two latex injection/sampling sites; and,
- a sterile, vented, 700 ml capacity, graduated (in 50 ml increments), vinyl collection bag.

The External Drainage System II Collection Bag with Tubing (catalog no. 82-1721), Figure 2, is comprised of the external components only for replacement purposes. A female LUER-LOK connector with cap is provided for connection with 1.5 mm I.D. silicone ventricular catheters.

The above products are provided sterile.

NOTE: Collection bag volume measurement ±20 ml, or ±5% of actual liquid volume. Drip chamber volume measurement ±1%.

The following components are available separately for use with the CODMAN External Drainage System II:

Catalog Number	Description
82-1722	CODMAN External Drainage System II Collection Bag (sterile), package of 5
82-1723	CODMAN External Drainage System II Pole Clamp (non sterile)
82-1704	CODMAN Disposable ICP Monitoring Line (sterile)
82-1705	CODMAN External Drainage Catheter Set (sterile)
82-1706	CODMAN Lumbar External Drainage Catheter with Touhy Needle (sterile)

Contraindications
This device is not designed, sold, or intended for use except as indicated.

Use of this device is contraindicated if scalp infection is present.

It is contraindicated in patients receiving anticoagulants or who are known to have a bleeding diathesis.

It is contraindicated where 24-hour supervision from trained personnel is not available.

WARNINGS
Intracranial pressure is controlled by the height of the drip chamber relative to the patient. It is imperative, therefore, that neither the drip chamber nor the patient be raised or lowered accidentally.

Prevent wetting the drip chamber sterile vent, since wetting may alter the pressure setting. If the vent becomes wet, immediately change the tubing and

Questions? Contact FDA/CDRH/OCE/DID at CDRH-FOISTATUS@fda.hhs.gov or 301-796-8118

Records processed under FOIA Request 2013-6292; Released 10/17/14

drainage bag with an 82-1721 or components from an 82-1720.

Change the height of the drip chamber or the patient only by qualified personnel on the orders of the physician.

Movement by the patient after positioning of the drip chamber may affect the ICP.

To minimize the risk of damage to the catheter, take care not to withdraw the catheter after insertion into the needle. If the catheter must be removed, withdraw the needle and catheter simultaneously.

Finger-tighten all LUER-LOK connections prior to first use of the system. Connections could loosen during shipping and handling.

With the stopcock in the Monitoring Only Position (Figure 8), fluid will not drain into the collection bag. The stopcock should not be left in this position if shunting is the primary function. The stopcock must be returned to the Drainage Only Position (Figure 7).

Monitoring ICP with the stopcock in the Monitoring/Drainage Position (Figure 9) may result in false ICP readings. Simultaneous drainage and transducer monitoring may result in waveform artifacts and artificially low ICP readings as described by Wilkinson[5]. Alternate ICP drainage and monitoring can be achieved by adjusting the stopcock to either the Drainage Only Position (Figure 7) for ICP drainage or the Monitoring Only Position (Figure 8) for ICP Monitoring.

If the stopcock is turned to the Monitoring Only Position or Off Position (Figure 10) during ICP monitoring or flushing of the system, it must be returned to the Drainage Only Position in order to resume shunting.

Care should be taken not to raise or lower the drip chamber when calculating the drainage rate.

PRECAUTIONS

Refer to manufacturer's instructions when using components other than Codman's.

Aseptic technique is necessary in all phases of the use of this product.

Exercise extreme care to prevent the ventricular catheter from coming in contact with bare fingers, towels, drapes, talc, or any linty or granular surfaces.

Silicone rubber is highly electrostatic and, as a result, attracts airborne particles and surface contaminants that could produce tissue reaction.

Silicone rubber has a low cut and tear resistance; therefore, use rubber shod forceps when handling the catheter.

It is recommended that the catheter be sutured to the LUER-LOK hub to prevent possible separation of the components when the catheter is removed.

Exercise care when placing ligatures so as to avoid cutting or occluding the tubing. The use of stainless steel ligatures on silicone products is not recommended.

Take care when removing and replacing the LUER-LOK cap to prevent contamination.

To reduce the incidence of infection, it is recommended that care of the catheter exit site and the connection to the external drain be carried out in accordance with principles established for the care of long-term hyperalimentation catheters.

It is recommended that the collection bag be suspended, rather than be allowed to lie on a surface during transport. Wetting of the vent by fluid inside the bag for a prolonged period of time may cause entrapment of air. This will reduce the capacity of the bag.

Sterility

② Do Not Reuse

This product is for SINGLE USE ONLY; DO NOT RESTERILIZE. Use aseptic technique in all phases of handling. Johnson & Johnson Professional will not be responsible for any product that is resterilized, nor will we accept for credit or exchange any product that has been opened but not used.

As long as the individual package of this product is not opened or damaged, the product is sterile.

Instructions for use

A. General Surgical Technique: Ventricular Catheter

Since the sites of insertion of the ventricular catheter vary, decisions regarding the technique of insertion and verification of proper placement must be made by the surgeon on a case by case basis.

1. Aseptically prepare and drape the operative site.

2. Perform the catheterization with the stylet in place in the catheter; remove the stylet, check for free flow of fluid.

3. Attach the distal end of the catheter to the barbed end of the trocar. Insert the sharp end of the trocar

Questions? Contact FDA/CDRH/OCE/DID at CDRH-FOISTATUS@fda.hhs.gov or 301-796-8118

Records processed under FOIA Request 2013-6292; Released 10/17/14

into the incision used for catheterization and tunnel subcutaneously for a short distance. See Figure 3.

4. Bring the trocar out through the scalp. Taking care not to dislodge the intraventricular portion of the catheter, draw the catheter through the subcutaneous tunnel until the loop of catheter no longer protrudes from the incision. See Figure 4. Occlude the catheter with shod forceps.

5. Secure the catheter to the skin at the exit site. Suture the incision site. Cover the area with a sterile dressing.

6. Secure the distal end of the catheter to the barbed end of the female LUER-LOK connector with attached LUER-LOK cap. Do not remove the LUER-LOK cap until ready to attach the catheter to the patient line of the CODMAN External Drainage System II.

B. General Surgical Technique: Lumbar Catheter
Since the sites of insertion of the lumbar catheter vary, decisions regarding the technique of insertion and verification of proper placement must be made by the surgeon on a case by case basis.

1. Aseptically prepare and drape the operative site.

2. Use local anesthesia.

3. Make a small incision in the mid-lumbar region at the level of L-1 through L-3.

4. With obturator in place, insert the 14-gauge Touhy needle point into the subarachnoid space. Turn the bevel of the needle up for cephalic placement or down for caudal placement. To verify that the lumen of the Touhy needle has entered the subarachnoid space, withdraw the obturator slowly until CSF appears. If CSF does not appear, reinsert the obturator and reposition the needle.

5. When the needle is positioned precisely and crystal clear CSF is obtained, completely remove the obturator and insert the fenestrated open end of the catheter through the Touhy needle into the subarachnoid space to the desired level. The marks located on the side of the catheter assist in measuring this distance. NOTE: To facilitate placement, moisten the catheter in a sterile solution.

WARNING: To minimize the risk of damage to the catheter, take care not to withdraw the catheter after insertion into the needle. If the catheter must be removed, withdraw the needle and catheter simultaneously.

6. Withdraw the Touhy needle over the distal end of the catheter with a to-and-fro motion as the catheter is held in position with shod tissue forceps.

PRECAUTION: Silicone has a low cut and tear resistance; therefore, use rubber shod forceps when handling silicone catheters.

7. Trim catheter close to the incision site.

8. Insert the barbed end of the LUER-LOK connector (with LUER-LOK cap attached) into the distal end of the cather and suture components together.

PRECAUTION: It is recommended that the catheter be sutured to the LUER-LOK hub to prevent possible separation of the components when the catheter is removed.

PRECAUTION: Exercise care when placing ligatures so as to avoid cutting or occluding the tubing. The use of stainless steel ligatures on silicone products is not recommended.

9. Secure the connector to the skin at the catheter exit site by suturing through the holes in the flange.

10. Cover the area with a sterile dressing. Do not remove the LUER-LOK cap until ready to attach the catheter to the patient line of the CODMAN External Drainage System II.

PRECAUTION: Take care when removing and replacing the LUER-LOK cap to prevent contamination.

C. Installation of External Components
1. Secure the CODMAN External Drainage Pole Clamp, catalog no. 82-1723, to an I.V. pole.

2. Securely mount the EDS II Tray on the pole clamp. Level the red 0 on the scale with the center line of the patient's head for ventricular drainage; and with the lumbar catheter exit site for lumbar drainage. Be sure all five slide clamps are open.

A string and CORD-LOC Locking Mechanism are provided as an alternate method of attachment. For extra security, knot the string above the CORD-LOC Locking Mechanism after placement.

WARNING: Intracranial pressure is controlled by the height of the drip chamber relative to the patient. It is imperative, therefore, that neither the drip chamber nor the patient be raised or lowered accidentally.

WARNING: Movement by the patient after positioning of the drip chamber may affect the ICP.

Questions? Contact FDA/CDRH/OCE/DID at CDRH-FOISTATUS@fda.hhs.gov or 301-796-8118

Records processed under FOIA Request 2013-6292; Released 10/17/14

WARNING: Care must be taken to prevent wetting of the drip chamber sterile vent, since wetting may alter the pressure setting. If it is suspected that the vent has become wet, it is recommended that the tubing and drainage bag be changed immediately with an 82-1721 or components from an 82-1720.

PRECAUTION: It is recommended that the collection bag be suspended, rather than be allowed to lie on a surface during transport. Wetting of the vent by fluid inside the bag for a prolonged period of time may cause air entrapment. This will reduce the capacity of the bag.

3. Slide the drip chamber arrow to the appropriate pressure setting in mm HG or cm H_2O. Turn the black screw clockwise to secure. DO NOT OVERTIGHTEN THE SCREW.

NOTE: The pressure setting arrow corresponds to the fluid outlet at the antireflux valve within the drip chamber. The inlet tubing above the antireflux valve has no effect on the pressure setting because both sides of the tubing are equidistant to its peak from the pressure setting arrow. See Figure 6.

4. Rotate both stopcocks to the Drainage Only Position. See Figure 7.

5. Intracranial pressure monitoring lines (not supplied) attach to the tray stopcock at 0 or to the patient line stopcock.

NOTE: The design of the CODMAN External Drainage System II permits air to enter at the drip chamber sterile vent. This allows setting of the ICP by means of the drip chamber height and prevents suction or back pressure from the downstream line or collection bag from affecting the setting. It is normal to have air in the tubing downstream from the drip chamber.

6. Prime the system using sterile technique with sterile physiological saline solution. Flush through to drip chamber via the patient line LUER-LOK connector or patient stopcock monitoring port. Verify absence of leaks and free flow of fluid to drainage bag.

7. Remove the LUER-LOK cap from the female LUER-LOK connector of the distal end of the ventricular or lumbar catheter. Attach the connector to the patient line.

D. Using Pressure Monitoring Equipment
With ICP monitoring equipment connected to either monitoring port, ICP can be monitored with the stopcock in either of two positions, as detailed below.

1. ICP can be monitored by turning the selected stopcock so the middle leg points towards the catheter connection, as shown in Figure 8. This stops the flow of fluid to the collection bag and injection site. Fluid pressure will transmit only from the catheter to the monitoring port.

WARNING: With the stopcock in the Monitoring Only Position, fluid will not drain into the collection bag. The stopcock should not be left in this position if shunting is the primary function. Return the stopcock to the Drainage Only Position (Figure 7).

2. ICP can also be monitored while permitting fluid to drain into the collection bag. Turn the stopcock so the middle leg points toward the monitoring port, as shown in Figure 9.

WARNING: Monitoring ICP with the stopcock in the Monitoring/Drainage Position (Figure 9) may result in false ICP readings. Simultaneous drainage and transducer monitoring may result in waveform artifacts and artificially low ICP readings as described by Wilkinson.[3] Alternate ICP drainage and monitoring can be achieved by adjusting the stopcock to either the Drainage Only Position (Figure 7) for ICP drainage or the Monitoring Only Position (Figure 8) for ICP monitoring.

E. Injection and Sampling
1. With the middle leg of the patient stopcock pointing away from the monitoring port (Drainage Only Position, Figure 7) close the slide clamp immediately distal of the stopcock. (**NOTE:** Two slide clamps are provided if a double-clamping technique is utilized.)

2. Before puncturing the injection site, aseptically clean the site to prevent possible contamination. (**NOTE:** If desired, you can use a small syringe to remove air trapped in the line before performing the injection.)

3. Perform the injection, or sampling, as required. (**NOTE:** The capacity of the patient line and ventricular catheter, from the injection site to the proximal tip of the catheter, is approximately 1 cc.)

4. Reopen the clamp(s) after injection or sampling to resume drainage.

F. Flushing the System
To flush the system from the stopcock to the collection bag, turn the patient stopcock to the Off Position, so the middle leg points toward the injection site (Figure 10). Open all clamps. Inject flushing medium into injection site.

Questions? Contact FDA/CDRH/OCE/DID at CDRH-FOISTATUS@fda.hhs.gov or 301-796-8118

Records processed under FOIA Request 2013-6292; Released 10/17/14

WARNING: When flushing is completed, return the stopcock to the Drainage Only Position (Figure 7).

G. Replacing the CODMAN External Drainage System II Collection Bag and Tubing Set (catalog no. 82-1721).
Observe sterile technique during replacement of the collection bag and tubing set.

1. Occlude the ventricular catheter with shod forceps.

2. Turn either stopcock to the Off Position (Figure 10).

3. Disconnect the LUER-LOK between the catheter and the patient line with a twisting counterclockwise motion. Discard the old tubing, drip chamber, and collection bag.

4. Install the new collection bag and tubing set.

H. Replacing the CODMAN External Drainage System II Collection Bag (catalog no. 82-1722)
Observe sterile technique during replacement of the collection bag. Refer to the instructions accompanying the replacement bag.

NOTE: A latex injection and sampling site is located at the bottom of the collection bag. To allow drainage from the collection bag, remove this site by cutting below the clamp using sterile technique..

I. Determining the Drainage Rate
1. Measure the fluid in the bag after a predetermined amount of time has elapsed.

2. Calculate the drainage rate by dividing the volume collected by the time elapsed.

Alternate Method
To determine the drainage rate when drainage volume is small (75 cc or less), follow the procedure outlined below.

1. Clamp the drainage tubing 2 cm below the drip chamber.

2. After a predetermined amount of time has elapsed, measure the fluid accumulation in the drip chamber in milliliters. Do not allow the drip chamber to fill completely, since this could allow wetting and blockage of the sterile vent. NOTE: The amount of fluid in the base of the drip chamber and the 2 cms of clamped tubing (.5 cc) should not be included in this measurement.

3. Calculate the drainage rate by dividing the volume collected by the time elapsed.

4. Unclamp the tubing below the drip chamber to continue drainage.

WARNING: Care should be taken not to raise or lower the drip chamber when calculating the drainage rate.

References

1. Ingraham FD and Campbell JB: An apparatus for closed drainage of the ventricular system. Ann Surg 114: 1096-1098, 1941.

2. Bering EA: A simplified apparatus for constant ventricular drainage. J Neurosurg 8: 450-452, 1951.

3. White RJ, Dakters J, Young H, et al: Continuous control of CSF volume and pressure with an externalized valve-drainage system. Trans Am Soc Artif Intern Organs 13: 332-333, 1967.

4. White RK, Dakters, JG, et al: Temporary control of cerebrospinal fluid volume and pressure by means of an externalized valve-drainage system. J Neurosurg 30: 264-269, 1969.

5. Wilkinson, HA, Yazebski, J, Wilkinson, EC, and Anderson, FA: Erroneous measurement of ICP caused by simultaneous ventricular drainage: a hydrodynamic model study. Neurosurgery, Vol. 24, No. 3: 348-354, 1989.

Warranty
Johnson & Johnson Professional, Inc., warrants that this medical device is free from defects in both materials and workmanship. THE ABOVE WARRANTIES ARE IN LIEU OF ALL OTHER WARRANTIES EITHER EXPRESS OR IMPLIED, INCLUDING ANY WARRANTY OF MERCHANTABILITY OR FITNESS FOR A PARTICULAR PURPOSE. Suitability for use of the medical device for any surgical procedure shall be determined by the user. Johnson & Johnson Professional shall not be liable for incidental or consequential damages of any kind.

® CODMAN is a registered trademark of Johnson & Johnson Professional, Inc.
® LUER-LOK is a registered trademark of Becton, Dickinson, and Co.
® CORD-LOC is a registered trademark of ITW Nexus

Questions? Contact FDA/CDRH/OCE/DID at CDRH-FOISTATUS@fda.hhs.gov or 301-796-8118

Records processed under FOIA Request 2013-6292; Released 10/17/14

DEUTSCH

WICHTIGE HINWEISE
Bitte vor Gebrauch lesen

CODMAN® Externe-Drainage-System II
CODMAN Externe-Drainage-System II Auffangbeutel mit Schlauch

STERILE | EO
Durch Äthylenoxid sterilisiert

Indikationen
Das CODMAN Externe-Drainage-System II ist zur Drainage von zerebrospinalen Flüssigkeiten (CSF) und anderen Flüssigkeiten ähnlicher physikalischer Charakteristiken als Mittel, erhöhtes intrakraniales Volumen und Druck zu reduzieren und zu kontrollieren, sofern die Insertion eines permanenten internen Nebenschlusses nicht indiziert ist.[1-4]

Beschreibung
Das Externe-Drainage-System II (Kat.-Nr. 82-1720), Abbildung 1, besteht aus:

- einem 35 cm langen strahlendurchlässigen Silikonventrikelkatheter (Innendurchmesser 1,5 mm, Außendurchmesser 3,1 mm);
- einem 36 cm langen Stylet aus rostfreiem Stahl zur Einführung des Katheters;
- einem gebogenen Stahl-Trokar mit Drahtende, womit der Katheter subkutan durchgezogen werden kann;
- einem negativen LUER-LOK®-Anschluß und LUER-LOK-Kappe zur Verbindung des distalen Endes des Katheters;
- doppelter 24 Zoll Schnur mit CORD-LOC® Schließmechanismus;
- einer 27 cm Meß-Rückentafel (mit thermoformiertem Tablett) zur Regulierung intrakranialen Drucks mit mm Hg Umrechnung und mehrsprachigen Anleitungen;
- einer 75 ml Tropfkammer, die mit einem Antirückfluß-Ventil und sterilem atmosphärischem Ausgang ausgestattet ist;
- einer 157 cm mit zwei Klemmen ausgestatteten Patientenleitung;
- zwei 4-Wege-Verschlußhähne mit je einem negativen LUER-LOK-Anschluß für den Monitor;
- zwei Latex Injektions-/Probenbereiche; und
- einem sterilen, belüfteten, mit Meßeinheiten (in 50 ml Einheiten) ausgestatteten Vinyl Auffangbeutel mit einer Kapazität von 700 ml.

Der Auffangbeutel mit Schlauch (Kat.-Nr. 82-1721) des Externe-Drainage-Systems II, Abbildung 2, besteht aus den externen Komponenten lediglich zum Austausch. Ein negativer LUER-LOK-Anschluß mit Kappe wird zur Verbindung mit dem Silikonventrikelkatheter von 1,5 mm Innendurchmesser mitgeliefert.

Obige Produkte werden steril geliefert.

BEACHTE: Volumen des Auffangbeutels ±20 ml oder ±5% des tatsächlichen Flüssigkeitsvolumens. Volumen der Tropfkammer ±1%.

Folgende zusätzliche Artikel für das Externe-Drainage-System II können separat bestellt werden:

Kat.-Nr.	Beschreibung
82-1722	CODMAN Externe-Drainage-System II Auffangbeutel (steril), 5 Stück pro Packung
82-1723	CODMAN Externe-Drainage-System II Polklemme (nicht steril)
82-1704	CODMAN Einweg-Monitorleitung (steril) für intrakranialen Druck
82-1705	CODMAN Externe-Drainage-System Kathetersatz (steril)
82-1706	CODMAN Lumbaler Katheter mit Touhy-Nadel (steril) für externe Drainage

Kontraindikationen
Dieses Gerät ist nur für den angegebenen Zweck entworfen und zum Verkauf bestimmt.

Vom Gebrauch dieses Gerätes bei Kopfhautinfektionen wird abgeraten.

Ebenso wird davon abgeraten, bei Patienten, die Antikoagulanten erhalten oder bei denen eine blutende Diathese festgestellt wurde, das System einzusetzen.

Das Gerät darf nicht benutzt werden, wenn nicht 24stündige Überwachung durch geschultes Personal gewährleistet ist.

19

Questions? Contact FDA/CDRH/OCE/DID at CDRH-FOISTATUS@fda.hhs.gov or 301-796-8118

Records processed under FOIA Request 2013-6292; Released 10/17/14

WARNHINWEISE

Der intrakraniale Druck wird durch die Höhe der Tropfkammer im Verhältnis zum Patienten kontrolliert. Es ist daher von äußerster Wichtigkeit, daß weder die Tropfkammer noch der Patient aus Versehen angehoben oder gesenkt werden.

Vermeiden Sie, daß der sterile Ausgang der Tropfkammer feucht wird, da Feuchtigkeit die Druckeinstellung verändert. Sollte der Ausgang feucht werden, wechseln Sie sofort die Schläuche und den Drainage-Beutel gegen ein 82-1721 oder Komponenten eines 82-1720 aus.

Die Höhe der Tropfkammer oder des Patienten sollte nur von geschultem Personal und auf Anweisung des Arztes vorgenommen werden.

Wenn sich der Patient bewegt, nachdem die Tropfkammer angebracht wurde, kann dies den intrakranialen Druck beeinflussen.

Um das Risiko eines Schadens am Katheter auf ein Minimum zu halten, sollte der Katheter niemals zurückgezogen werden, nachdem er in die Nadel eingeführt worden ist. Wenn der Katheter entfernt werden muß, Nadel und Katheter gleichzeitig entfernen.

Vor dem ersten Gebrauch des Systems alle LUER-LOK-Verbindungen mit den Fingern feststellen. Verbindungen könnten sich während des Transportes gelockert haben.

Steht der Verschlußhahn auf „Nur Überwachung" (Abbildung 8), läuft keine Flüssigkeit in den Auffangbeutel. Der Verschlußhahn sollte jedoch nicht in dieser Position gelassen werden, wenn Shunting die primäre Funktion ist. Der Verschlußhahn muß stets auf „Nur Drainage" zurückgestellt werden (Abbildung 7).

Steht der Verschlußhahn während der Überwachung des intrakranialen Drucks auf „Überwachung/Drainage" (Abbildung 9), können die Werte für intrakranialen Druck falsch ausfallen. Transducer-Überwachung mit gleichzeitiger Drainage kann wellenförmige Artefakte und künstlich niedrige Werte für intrakranialen Druck, wie von Wilkinson[5] beschrieben, zur Folge haben. Überwachung mit wechselnder Drainage des intrakranialen Drucks kann durch Verstellen des Verschlußhahns auf entweder „Nur Drainage" (Abbildung 7) für Drainage des intrakranialen Drucks oder auf „Nur Überwachung" (Abbildung 8) für Überwachung des intrakranialen Drucks erzielt werden.

Steht der Verschlußhahn auf „Nur Überwachung" oder „OFF" (Abbildung 10) während der Überwachung des intrakranialen Drucks oder Spülung des Systems, muß er zum Fortsetzen des Shunting wieder auf „Nur Drainage" zurückgestellt werden.

Vorsicht ist angebracht, daß die Tropfkammer weder erhöht nocht gesenkt wird, wenn die Drainagegeschwindigkeit errechnet wird.

VORSICHTSMASSNAHMEN

Bitte Herstellerangaben beachten, wenn Komponenten benutzt werden, die nicht von Codman hergestellt wurden.

Aseptisches Vorgehen ist bei allen Phasen der Handhabung dieses Produkts notwendig.

Besonders sorgfältig darauf achten, daß der Ventrikelkatheter nicht mit den bloßen Fingern, Handtüchern, Abdecktüchern,Talkum oder faserigen oder aufgerauhten Oberflächen in Kontakt kommt.

Silikongummi ist äußerst elektrostatisch und zieht daher in der Luft befindliche Partikel und verunreinigende Stoffe an, die Gewebereaktionen hervorrufen können.

Silikongummi hat einen geringen Schneide- und Reißwiderstand; daher sollten gummibezogene Zangen in der Handhabung des Katheters benutzt werden.

Es wird empfohlen, den Katheter an der LUER-LOK-Haube anzunähen, um mögliches Ablösen der Komponenten bei Entfernung des Katheters zu vermeiden.

Bei der Anbringung von Ligaturen besonders darauf achten, daß Schläuche nicht geschnitten oder blockiert werden. Es wird nicht empfohlen, Ligaturen aus rostfreiem Stahl an Silikonprodukten zu benutzen.

Vorsicht beim Entfernen und Ersetzen von LUER-LOK-Kappen, um Unreinigkeiten zu vermeiden.

Um das Auftreten von Infektion zu reduzieren, wird Sorgfalt empfohlen bei der Pflege der Katheteraustrittsstelle. Die Verbindung zum externen Drain sollte gemäß der für die Pflege langfristig liegender Katheter erstellten Richtlinien erfolgen.

Der Auffangbeutel sollte während des Transports frei hängen und nicht aufliegen. Feuchtigkeit an der Öffnung durch Flüssigkeit im Beutel über längere Zeit hinweg kann dazu führen, daß Luft eingefangen wird. Hierdurch wird die Kapazität des Beutels verringert.

Questions? Contact FDA/CDRH/OCE/DID at CDRH-FOISTATUS@fda.hhs.gov or 301-796-8118

Records processed under FOIA Request 2013-6292; Released 10/17/14

Sterilität

② Nur zum einmaligen Gebrauch

Dieses Produkt ist NUR ZUM EINMALIGEN GEBRAUCH bestimmt, NICHT RESTERILISIEREN. In allen Phasen der Handhabung sollte aseptisch vorgegangen werden. Johnson & Johnson Professional übernimmt keine Haftung für Produkte, die resterilisiert wurden, noch werden Produkte auf Gutschrift oder im Umtausch zurückgenommen, die bereits geöffnet wurden.

Solange die Original-Verpackung des Externe-Drainage-Systems II nicht geöffnet oder beschädigt ist, ist dieses System steril.

Betriebsanleitungen

A. Allgemeine chirurgische Technik: Ventrikelkatheter

Da die Einführungsstelle des Ventrikelkatheters variiert, muß die Entscheidung bezüglich Einführungstechnik und Überprüfung des korrekten Sitzes vom Chirurgen von Fall zu Fall getroffen werden.

1. Die Operationsstelle aseptisch vorbereiten und abdecken.

2. Die Katheterisierung erfolgt mit dem Stylet an Ort und Stelle im Katheter; Stylet entfernen und freien Flüssigkeitslauf überprüfen.

3. Das distale Ende des Katheters mit dem spitzen Ende des Trokars verbinden. Das scharfe Ende des Trokars in den für die Katheterisierung benutzten Einschnitt einführen und für einen kleinen Abstand subkutan durchführen. Siehe Abbildung 3.

4. Den Trokar durch den Skalp wieder ausführen. Ohne den intraventrikulären Abschnitt des Katheters zu verschieben, den Katheter durch den subkutanen Tunnel ziehen, bis die Schleife des Katheters nicht mehr aus dem Stirnschnitt hervorsteht. Siehe Abbildung 4. Den Katheter mit bezogener Zange verschließen.

5. Katheter an der Austrittstelle an der Haut befestigen. Die Einschnittstelle nähen. Den Bereich mit sterilem Verband bedecken.

6. Das distale Ende des Katheters mit beigefügter LUER-LOK-Kappe zum spitzen Ende des negativen LUER-LOK-Anschlusses verbinden. Die LUER-LOK-Kappe nicht entfernen, bevor der Katheter an die Patientenleitung des CODMAN Externe-Drainage-Systems II angeschlossen werden kann.

B. Allgemeine chirurgische Technik: Lumbaler Katheter

Da die Einführungsstelle des lumbalen Katheters variiert, muß die Entscheidung bezüglich Einführungstechnik und Überprüfung des korrekten Sitzes vom Chirurgen von Fall zu Fall getroffen werden.

1. Die Operationsstelle aseptisch vorbereiten und abdecken.

2. Örtliche Betäubung anwenden.

3. Einen kleinen Einschnitt im mittleren lumbalen Bereich auf Höhe von L-1 bis L-3 vornehmen.

4. Während sich der Obturator noch an Ort und Stelle befindet, eine Eichmaß 14 Touhy-Nadel in den subarachnoidalen Bereich einführen. Die Schrägung der Nadel nach oben richten zur cephalischen Plazierung und nach unten zur caudad Plazierung. Zur Überprüfung, ob das Lumen der Nadel sich im subarachnoidalen Bereich befindet, den Obturator vorsichtig herausziehen, bis CSF erscheint. Wenn kein CSF erscheint, den Obturator wieder einführen und die Nadel neu positionieren.

5. Wenn die Nadel präzise plaziert ist und kristallklares CSF erscheint, den Obturator komplett entfernen und das gefensterte offene Ende des Katheters durch die Touhy-Nadel in den subarachnoidalen Bereich zur gewünschten Tiefe einführen. Die Markierungen an der Seite des Katheters helfen beim Berechnen der Entfernung. **ANMERKUNG:** Zur Erleichterung der Einführung den Katheter mit einer sterilen Lösung anfeuchten.

WARNHINWEIS: Um das Risiko eines Schadens am Katheter auf ein Minimum zu halten, sollte der Katheter niemals zurückgezogen werden, nachdem er in die Nadel eingeführt ist. Wenn der Katheter entfernt werden muß, Nadel und Katheter gleichzeitig entfernen.

6. Die Nadel über das distale Ende des Katheters mit einer Hin- und Herbewegung entfernen, während der Katheter durch eine bezogene Gewebezange in Position gehalten wird.

VORSICHTSMASSNAHME: Silikongummi hat einen geringen Schneide- und Reißwiderstand; daher sollten gummibezogene Zangen in der Handhabung des Katheters benutzt werden.

7. Katheter nahe zur Einschnittstelle schneiden.

8. Das spitze Ende des LUER-LOK-Anschlusses (mit LUER-LOK-Kappe) in das distale Ende des Katheters einführen und Komponenten zusammennähen.

Questions? Contact FDA/CDRH/OCE/DID at CDRH-FOISTATUS@fda.hhs.gov or 301-796-8118

Records processed under FOIA Request 2013-6292; Released 10/17/14

VORSICHTSMASSNAHME: Es wird empfohlen, den Katheter an der LUER-LOK-Haube anzunähen, um ein mögliches Ablösen der Komponenten bei Entfernung des Katheters zu vermeiden.

VORSICHTSMASSNAHME: Beim Legen von Ligaturen sorgfältig darauf achten, daß die Schläuche nicht angeschnitten oder blockiert werden. Es wird nicht empfohlen, Ligaturen aus rostfreiem Stahl an Silikonprodukten zu benutzen.

9. Anschluß am Katheteraustritt an der Haut befestigen mit Stichen durch die Löcher am Flansch.

10. Bereich mit sterilem Verband bedecken. LUER-LOK-Kappe nicht entfernen, bevor der Katheter an die Patientenleitung des CODMAN Externe-Drainage-Systems II angeschlossen werden kann.

VORSICHTSMASSNAHME: Vorsicht beim Entfernen und Ersetzen von LUER-LOK-Kappen: Verunreinigung vermeiden!

C. Installation externer Komponenten

1. Die Polklemme des CODMAN Externe-Drainage-Systems II, Kat.-Nr. 82-1723, an einem Infusionsständer befestigen.

2. Das EDS II Tablett sicher an der Polklemme befestigen. Zur Ventrikulärdrainage die rote 0 der Skala auf die Mitte des Kopfes des Patienten ausrichten; und mit der Katheteraustrittsstelle für lumbale Drainage. Alle fünf Gleitklemmen müssen geöffnet sein.

Eine Schnur und ein CORD-LOC Schließmechanismus sind als alternative Methode der Anbringung beigefügt. Zur zusätzlichen Sicherheit die Schnur nach Anbringung über dem CORD-LOC Schließmechanismus verknoten.

WARNHINWEIS: Der intrakraniale Druck wird durch die Höhe der Tropfkammer im Verhältnis zum Patienten kontrolliert. Es ist daher von äußerster Wichtigkeit, daß weder die Lage der Tropfkammer noch die Lage des Patienten versehentlich geändert wird.

WARNHINWEIS: Bewegung des Patienten oder der Tropfkammer kann den intrakranialen Druck beeinflussen.

WARNHINWEIS: Vermeiden Sie, daß der sterile Ausgang der Tropfkammer feucht wird, da Feuchtigkeit die Druckeinstellung verändert. Sollte der Ausgang feucht werden, wechseln Sie sofort die Schläuche und den Drainagebeutel gegen ein 82-1721 oder Komponenten eines 82-1720 aus.

VORSICHTSMASSNAHMEN: Der Auffangbeutel sollte während des Transports frei hängen und nicht aufliegen. Feuchtigkeit an der Öffnung durch Flüssigkeit im Beutel über längere Zeit hinweg kann dazu führen, daß Luft in das System strömt. Hierdurch wird die Kapazität des Beutels verringert.

3. Den Tropfkammermarkierstab auf entsprechende Druckposition in mm Hg oder cm H_2O einstellen. Die schwarze Schraube im Uhrzeigersinn drehen. DIE SCHRAUBE NICHT ÜBERDREHEN.

ANMERKUNG: Der Druckeinstellungsmarkierstab zeigt den Flüßigkeitsaustritt am Antirückfluß-Ventil in der Tropfkammer. Der Inlet-Schlauch über dem Antirückfluß-Ventil beeinflußt die Druckeinstellung in keiner Weise, da beide Seiten des Schlauches in gleicher Entfernung vom Druckeinstellungsmarkierstab zu seiner Spitze liegen. Siehe Abbildung 6.

4. Beide Verschlußhähne auf „Nur Drainage" einstellen. Siehe Abbildung 7.

5. Monitorleitungen für intrakranialen Druck (nicht beigefügt) passen an den Verschlußhahn des Tabletts bei 0 oder an den Verschlußhahn der Patientenleitung.

ANMERKUNG: Das CODMAN Externe-Drainage-System II ist so konzipiert, daß es Luftzufuhr am sterilen Ausgang der Tropfkammer erlaubt. Dadurch kann der intrakraniale Druck durch die Höhe der Tropfkammer bestimmt und einem Ansaugen oder Gegendruck vom nach unten führenden Schlauch oder vom Auffangbeutel vorgebeugt werden. Es ist normal, daß sich Luft im von der Tropfkammer nach unten führenden Schlauch befindet.

6. Das System mit sterilen Methoden mit einer sterilen Kochsalzlösung vorbereiten. Zur Tropfkammer hin über den LUER-LOK-Anschluß der Patientenleitung oder den Verschlußhahn des Patienten-Monitoranschlusses durchspülen. Auf Dichtigkeit und einwandfreien Durchfluß zum Tropfbeutel überprüfen.

7. LUER-LOK-Kappe von der negativen LUER-LOK-Kappe des distalen Endes des Ventrikel- oder lumbalen Katheters entfernen. Anschlußstück an die Patientenleitung befestigen.

D. Benutzung der Druck-Monitorgeräte

Wenn Monitorgeräte für intrakranialen Druck an dem Monitoranschluß angeschlossen sind, kann der intrakraniale Druck durch die Verschlußhähne wie unten angegeben in zwei verschiedenen Positionen überprüft werden.

132 89

Questions? Contact FDA/CDRH/OCE/DID at CDRH-FOISTATUS@fda.hhs.gov or 301-796-8118

Records processed under FOIA Request 2013-6292; Released 10/17/14

1. Der intrakraniale Druck kann überprüft werden, indem der Verschlußhahn gedreht wird, so daß der mittlere Fuß zum Katheteranschluß zeigt, wie in Abbildung 8 gezeigt. Hiermit wird der Flüssigkeitsfluß zum Auffangbeutel und zur Injektionsstelle unterbrochen. Flüssigkeitsdruck läuft nur vom Katheter zum Monitoranschluß.

WARNHINWEIS: Wenn der Verschlußhahn auf „Nur Überwachung" steht, läuft keine Flüssigkeit in den Auffangbeutel ab. Der Verschlußhahn sollte nicht in dieser Position bleiben, wenn Shunting die primäre Funktion ist. Verschlußhahn wieder auf „Nur Drainage" stellen. (Abbildung 7).

2. Der intrakraniale Druck kann ebenso überprüft werden, während Flüssigkeit in den Auffangbeutel abläuft. Hierzu den Verschlußhahn so drehen, daß das mittlere Bein zum Monitoranschluß zeigt, wie in Abbildung 9 angegeben.

WARNHINWEIS: Steht der Verschlußhahn während der Überwachung des intrakranialen Drucks auf Überwachung/Drainage (Abbildung 9), können die Werte für intrakranialen Druck falsch ausfallen. Transducer-Überwachung mit gleichzeitiger Drainage kann wellenförmige Artefakte und künstlich niedrige Werte für intrakranialen Druck, wie von Wilkinson[5] beschrieben, zur Folge haben. Überwachung mit wechselnder Drainage des intrakranialen Drucks kann durch Verstellung des Verschlußhahns auf entweder „Nur Drainage" (Abbildung 7) für Drainage des intrakranialen Drucks oder auf „Nur Überwachung" (Abbildung 8) für Überwachung des intrakranialen Drucks erzielt werden.

E. Injektion und Probeentnahme

1. Zeigt das mittlere Bein des Patienten-Verschlußhahnes vom Monitoranschluß weg (Stellung „Nur Drainage", Abbildung 7), schließen Sie die Gleitklemmen direkt distal vom Verschlußhahn. (**ANMERKUNG:** Zwei Gleitklemmen sind beigefügt, falls eine Zwei-Klemmen-Technik benutzt wird.)

2. Vor dem Punktieren der Injektionsstellen die Stelle aseptisch reinigen, um Verunreinigungen zu vermeiden. (**ANMERKUNG:** Falls nötig, eine kleine Spritze benutzen, um die im Schlauch befindliche Luft vor der Injektion zu entfernen.)

3. Injektion oder Probeentnahme wie gewünscht durchführen. (**ANMERKUNG:** Die Kapazität der Patientenleitung und des Ventrikelkatheters von der Injektionsstelle zur proximalen Spitze des Katheters beträgt ungefähr 1 cm³.)

4. Nach Injektion oder Probeentnahme die Klemmen wieder öffnen, um die Drainage fortzusetzen.

F. Reinigung des Systems

Um das System vom Verschlußhahn zum Auffangbeutel zu reinigen, den Patienten-Verschlußhahn umstellen, so daß das mittlere Bein zur Injektionsstelle zeigt (Abbildung 10). Alle Klemmen öffnen. Reinigungsmittel in die Injektionsstelle injizieren.

WARNHINWEIS: Nach Abschluß der Reinigung Verschlußhahn wieder auf „Nur Drainage" stellen. (Abbildung 7).

G. Austausch des Auffangbeutels und Schlauchsatzes (Kat.-Nr. 82-1721) des CODMAN Externe-Drainage-Systems II

Während des Austausches des Auffangbeutels und des Schlauchsatzes sterile Arbeitsmethoden anwenden.

1. Den Ventrikelkatheter mit bezogener Zange verschließen.

2. Beide Verschlußhähne auf OFF stellen (Abbildung 10).

3. Den LUER-LOK zwischen Katheter und die Patientenleitung durch Drehen gegen den Uhrzeigersinn lösen. Alte Schläuche, Tropfkammer und Auffangbeutel wegwerfen.

4. Neuen Auffangbeutel und Schlauchsatz installieren.

H. Austausch des Auffangbeutels (Kat.-Nr. 82-1722) des CODMAN Externe-Drainage-Systems II

Während des Austauschs des Auffangbeutels sterile Arbeitsmethoden anwenden. Die Anleitungen des Austauschbeutels lesen.

ANMERKUNG: Die Latex-Einspritzstelle zur Probeentnahme und Injektion befindet sich im unteren Teil des Auffangbeutels. Um Drainage vom Auffangbeutel zuzulassen, die Stelle durch Schneiden unterhalb der Klemme unter Einhaltung steriler Arbeitsmethoden entfernen.

I. Bestimmung der Drainagegeschwindigkeit

1. Nach Ablauf eines vorher bestimmten Zeitraumes die Flüssigkeit im Beutel messen.

2. Drainagegeschwindigkeit errechnen, indem das gesammelte Volumen durch die verronnene Zeit geteilt wird.

Alternativmethode

Zur Bestimmung der Drainagegeschwindigkeit bei kleinem Volumen (75 cm³ oder weniger) nach folgendem Verfahren vorgehen.

Questions? Contact FDA/CDRH/OCE/DID at CDRH-FOISTATUS@fda.hhs.gov or 301-796-8118

Records processed under FOIA Request 2013-6292; Released 10/17/14

1. Drainageschläuche 2 cm unterhalb der Tropfkammer abklemmen.

2. Nach Ablauf der vorher festgelegten Zeit die Flüssigkeit in der Tropfkammer in Milliliter messen. Die Tropfkammer darf sich nicht völlig füllen, da dies zum Anfeuchten und Blockieren des sterilen Ausgangs führen könnte. **ANMERKUNG:** Die Flüssigkeitsmenge am Boden der Tropfkammer und in den 2 cm der abgeklemmten Schläuche (0,5 cm³) nicht mitmessen.

3. Drainagegeschwindigkeit errechnen, indem das gesammelte Volumen durch die verronnene Zeit geteilt wird.

4. Schlauchklemmen unterhalb der Tropfkammer lösen und Drainage fortsetzen.

WARNHINWEIS: Sorgfältig darauf achten, daß die Position der Tropfkammer nicht verändert wird, während die Drainagegeschwindigkeit errechnet wird.

Quellenangaben

Quellenangaben finden Sie im englischen Abschnitt dieses Dokuments.

Garantie

Johnson & Johnson Professional, Inc. garantiert, daß dieses medizinische Produkt frei von Material- und Herstellungsmängeln ist. DIE OBIGEN GARANTIEN GELTEN ANSTELLE ALLER ANDEREN AUSDRÜCKLICHEN ODER STILLSCHWEIGEND VORAUSGESETZTEN GARANTIEN, EINSCHLIESSLICH JEGLICHER GARANTIE ÜBER DIE MARKTFÄHIGKEIT UND EIGNUNG ZU BESONDEREN ZWECKEN. Die Entscheidung, ob dieses medizinische Produkt für chirgurgische Verfahren geeignet ist, liegt beim Verbraucher. Johnson & Johnson Professional übernimmt keine Haftung für unvorhersehbare oder Folgeschäden jeglicher Art.

® CODMAN ist ein eingetragenes Warenzeichen von Johnson & Johnson Professional, Inc.

® LUER-LOK ist ein eingetragenes Warenzeichen von Becton, Dickinson, and Co.

® CORD-LOC ist ein eingetragenes Warenzeichen von ITW Nexus

[redacted]

INFORMATIONS IMPORTANTES
A lire avant utilisation

Système II de drainage externe CODMAN®
Sac de recueil avec tubulure du Système II de drainage externe CODMAN

STERILE	EO

Stérilisé à l'oxyde d'éthylène

Indications

L'utilisation du système II de drainage externe CODMAN est appropriée pour drainer le liquide céphalo-rachidien (LCR) et les autres fluides aux caractéristiques physiques similaires comme moyen de réduction et de contrôle d'une augmentation du volume intracrânien et de sa pression lorsque l'insertion d'une dérivation permanente interne est déconseillée.[1-4]

Description

Le système II de drainage externe (numéro de catalogue 82-1720), Figure 1, consiste en :

- un cathéter ventriculaire en silicone opaque aux rayons X de 35 cm (1,5 mm de diamètre interne, 3,1 mm de diamètre externe) ;
- un stylet droit en acier inoxydable de 36 cm pour le placement du cathéter ;
- un trocart courbé en acier inoxydable avec un hameçon pour tirer le cathéter sous la peau;
- un connecteur LUER-LOK® femelle et son capuchon pour brancher l'extrémité distale du cathéter ;
- une ficelle doublée de 61 cm avec mécanisme de verrouillage CORD-LOC® ;
- un tableau de 27 cm (incorporé au plateau thermo-formé) pour régulariser la pression intracrânienne (PIC) avec une conversion mm Hg et des instructions multilingues ;
- une chambre de compte-gouttes de 75 ml équipée d'une valve anti-reflux et d'une décompression atmosphérique stérile ;

134

91

Questions? Contact FDA/CDRH/OCE/DID at CDRH-FOISTATUS@fda.hhs.gov or 301-796-8118

Records processed under FOIA Request 2013-6292; Released 10/17/14

- un tuyau de patient de 157 cm équipé de deux clamps ;
- deux robinets d'arrêt à 4 voies chacun ayant un port de verrouillage LUER-LOK femelle pour le contrôle ;
- deux sites d'injection/prélèvement en latex ; et
- un sac de recueil en vinyle gradué (en augmentation de 50 ml) aéré et stérile d'une capacité de 700 ml.

Le sac de recueil et la tubulure du système II de drainage externe (numéro de catalogue 82-1721), Figure 2, sont inclus dans les composants externes, pour remplacement uniquement. Un connecteur LUER-LOK femelle avec son capuchon est fourni pour le branchement des cathéters ventriculaires en silicone de 1,5 mm de diamètre interne.

Les produits mentionnés ci-dessus sont fournis stériles.

NOTE : Mesure du volume du sac de recueil de l'ordre de ±20 ml, soit ±5 % du volume réel du liquide. Volume de la chambre du compte-gouttes ±1 %.

Les composants suivants sont disponibles séparément afin d'être utilisés avec le système II de drainage externe CODMAN:

Numéro du catalogue	Description
82-1722	Sac de recueil du système II de drainage externe CODMAN (stérile), paquet de 5
82-1723	Clamp de potence du système II de drainage externe CODMAN (non-stérile)
82-1704	Tuyau de contrôle PIC jetable CODMAN (stérile)
82-1705	Ensemble de cathéter de drainage externe CODMAN (stérile)
82-1706	Cathéter de drainage externe lombaire avec seringue Touhy (stérile)

Contre-indications

Cet appareil est conçu pour être vendu et utilisé uniquement comme indiqué.

L'utilisation de cet appareil est contre-indiquée en cas d'infection du cuir chevelu.

Elle est contre-indiquée pour les patients recevant un traitement d'anticoagulants ou ceux qui ont une diathèse avec perte de sang.

Elle est contre-indiquée aussi lorsqu'il n'y a pas de surveillance continuelle 24/24 heures par du personnel qualifié.

AVERTISSEMENTS

La pression intracrânienne est contrôlée par la hauteur de la chambre du compte-gouttes par rapport au patient. Il est impératif, donc, que les positions de la chambre du compte-gouttes et celle du patient ne soient modifiées accidentellement en aucun cas.

Evitez de mouiller la décompression stérile de la chambre du compte-gouttes car l'humidification peut modifier le réglage de la pression. Si la décompression est mouillée accidentellement, changez immédiatement la tubulure et le sac de recueil par un 82-1721 ou des composants de 82-1720.

Seul du personnel qualifié peut changer la hauteur de la chambre du compte-gouttes ou du patient sur l'ordre d'un médecin.

Une fois la chambre du compte-gouttes positionnée, les mouvements du patient peuvent affecter la PIC.

Pour minimiser le risque des dégâts du cathéter, prenez soin de ne pas retirer le cathéter après l'insertion dans l'aiguille. Si le cathéter doit être enlevé, retirez l'aiguille et le cathéter simultanément.

Serrez manuellement tous les branchements LUER-LOK avant d'utiliser le système. Les branchements peuvent se desserrer pendant le transport et la manutention.

Le robinet d'arrêt étant sur la position Contrôle Seulement (Figure 8), le fluide ne s'écoulera pas dans le sac de recueil. Le robinet d'arrêt ne doit pas être sur cette position si la dérivation chirurgicale est la fonction première. Le robinet d'arrêt doit être remis sur la position Drainage Seulement (Figure 7).

Le contrôle de la PIC avec le robinet d'arrêt sur la position de Drainage/Contrôle (Figure 9) peut provoquer de fausses lectures de la PIC. Le drainage et le contrôle simultanés du transducteur peuvent entraîner des résultats en forme d'ondes et des lectures de la PIC artificiellement basses comme l'a décrit Wilkinson.[5] Pour alterner le drainage et le contrôle de la PIC, placez le robinet d'arrêt, soit sur la position Drainage Seulement (Figure 7) pour le drainage de la PIC, soit sur la position Contrôle Seulement (Figure 8) pour le contrôle de la PIC.

Si le robinet d'arrêt est sur la position Contrôle Seulement ou sur OFF (Figure 10), pendant le contrôle de la PIC ou la purge du système, le robinet doit

Questions? Contact FDA/CDRH/OCE/DID at CDRH-FOISTATUS@fda.hhs.gov or 301-796-8118

Records processed under FOIA Request 2013-6292; Released 10/17/14

être remis sur la position Drainage Seulement de manière à recommencer la dérivation.

Il faut prendre soin de ne pas élever ou baisser la chambre du goutte à goutte lors du calcul du taux de drainage.

PRECAUTIONS

Référez-vous aux instructions du fabricant lors de l'utilisation des composants autres que ceux de Codman.

La technique d'aseptisation est nécessaire pour toutes les phases de l'utilisation de ce produit.

Veillez à ce que le cathéter ventriculaire n'entre pas en contact avec les doigts nus, les serviettes, les champs, le talc ou une surface en charpie ou granuleuse.

Le caoutchouc en silicone est très électrostatique et donc provoque une attraction des particules aériennes et des contaminants de surface qui pourraient provoquer une réaction des tissus.

Le caoutchouc en silicone a une faible résistance aux coupures ou aux déchirures, utilisez donc des forceps à patin en caoutchouc lors de la manipulation du cathéter.

Il est recommandé que le cathéter soit suturé à la garde du LUER-LOK pour éviter une séparation possible des composants lorsque le cathéter est enlevé.

Il faut être très attentif lors du placement des ligatures de manière à éviter de couper ou de bloquer les tubes. L'utilisation des ligatures en acier inoxydable sur des produits en silicone est déconseillée.

Soyez attentif également lors de l'enlèvement ou du remplacement du capuchon LUER-LOK afin d'éviter une contamination possible.

Pour réduire le risque d'infection, il est recommandé que l'entretien du site de sortie du cathéter et du branchement du drain externe soit fait selon les principes bien établis pour l'entretien des cathéters à hyper-alimentation à long-terme.

Il est recommandé que le sac de recueil soit suspendu au lieu d'être à plat sur une surface lors du transport. Ne mouillez pas la décompression par du fluide à l'intérieur du sac pendant une période prolongée car cela peut provoquer une accumulation d'air. Cela réduirait la capacité du sac.

Stérilité

② A usage unique

Ce produit est A USAGE UNIQUE SEULEMENT, NE PAS RESTERILISER LE PRODUIT. Utilisez une technique d'aseptisation pour toutes les phases de manutention. Johnson & Johnson Professional ne sera pas tenu responsable des produits qui ont été stérilisés. Aucun échange ne sera effectué ou un avoir émis pour un produit ouvert mais non-utilisé.

Tant que l'emballage individuel de ce produit n'est pas ouvert ou endommagé, le produit est stérile.

Instructions d'utilisation

A. Technique de chirurgie générale : Cathéter ventriculaire

Etant donné que les sites d'insertion de cathéter ventriculaire varient, il est du ressort du chirurgien de décider de la technique d'insertion et de la vérification du bon emplacement au cas par cas.

1. Aseptisez, préparez le site d'intervention et recouvrez-le de champs stériles.

2. Effectuez la cathétérisation avec le stylet en place dans le cathéter, enlevez le stylet et vérifiez la libre circulation du fluide.

3. Attachez l'extrémité distale du cathéter à l'hameçon du trocart. Insérez l'extrémité pointue du trocart dans l'incision utilisée pour la cathétérisation et faites un tunnel sous la peau sur une courte distance. Voir Figure 3.

4. Enlevez le trocart du cuir chevelu. Faites attention à ne pas déloger la portion intraventriculaire du cathéter, tirez sur le cathéter par le tunnel sous la peau jusqu'à ce que la boucle du cathéter ne sorte plus de l'incision. Voir Figure 4. Bloquez le cathéter avec les forceps à patin.

5. Fixez le cathéter sur la peau au site de sortie. Suturez le site d'incision. Couvrez la zone avec un pansement stérile.

6. Fixez l'extrémité distale du cathéter à l'hameçon du connecteur LUER-LOK femelle avec son capuchon LUER-LOK attaché. N'enlevez pas le capuchon LUER-LOK avant que vous ne soyez prêt à attacher le cathéter sur le tuyau du patient du système II de drainage externe CODMAN.

B. Technique de chirurgie générale : Cathéter lombaire

Etant donné que les sites d'insertion du cathéter lombaire varient, il est du ressort du chirurgien de prendre la décision en ce qui concerne la technique

Questions? Contact FDA/CDRH/OCE/DID at CDRH-FOISTATUS@fda.hhs.gov or 301-796-8118

Records processed under FOIA Request 2013-6292; Released 10/17/14

d'insertion et la vérification du bon emplacement au cas par cas.

1. Aseptisez et préparez le site d'intervention puis recouvrez-le de champs stériles.

2. Utilisez une anesthésie locale.

3. Effectuez une petite incision dans la région mi-lombaire au niveau des lombaires L-1 à L-3.

4. Une fois l'obturateur en place, insérez la pointe de l'aiguille Touhy de calibre 14 dans l'espace sous-arachnoïdien. Tournez le biseau de l'aiguille vers le haut pour un placement céphalique ou vers le bas pour un placement en direction caudale. Pour vérifier si le calibre intérieur de l'aiguille Touhy est entré dans l'espace sous-arachnoïdien, retirez l'obturateur doucement jusqu'à ce que le LCR apparaisse. Si le LCR n'apparaît pas, réinsérez l'obturateur et repositionnez l'aiguille.

5. Lorsque l'aiguille est positionnée soigneusement et que le LCR est clair, enlevez complètement l'obturateur et insérez l'extrémité ouverte fenêtrée du cathéter au travers de l'aiguille Touhy dans l'espace sous-arachnoïdien au niveau désiré. Les marques situées sur le côté du cathéter aident à mesurer la distance. **NOTE :** Pour faciliter le placement, humectez le cathéter dans une solution stérile.

AVERTISSEMENT : Pour éviter d'endommager le cathéter, prenez soin de ne pas retirer le cathéter une fois qu'il est inséré dans l'aiguille. Si le cathéter doit être enlevé, retirez l'aiguille et le cathéter simultanément.

6. Retirez l'aiguille Touhy sur l'extrémité distale du cathéter avec un mouvement de va-et-vient tandis que le cathéter est tenu en position avec les forceps pour tissu à patin.

PRECAUTION : Le silicone a une faible résistance aux coupures et déchirures, donc, utilisez des forceps à patins en caoutchouc lors de la manipulation des cathéters en silicone.

7. Egalisez le cathéter près du site d'incision.

8. Insérez l'hameçon du connecteur LUER-LOK (avec son capuchon LUER-LOK attaché) dans l'extrémité distale du cathéter et suturez les composants ensemble.

PRECAUTION : Il est recommandé de suturer le cathéter à la garde du LUER-LOK pour éviter une séparation éventuelle des composants lors de l'enlèvement du cathéter.

PRECAUTION : Prenez soin lors du placement des ligatures d'éviter de couper ou de bloquer la tubulure. L'utilisation de ligatures en acier inoxydable sur des produits en silicone est déconseillée.

9. Fixez le branchement à la peau au site de sortie du cathéter en suturant à travers les trous dans la collerette.

10. Couvrez la zone de pansements stériles. N'enlevez pas le capuchon LUER-LOK à moins que vous ne soyez prêt à attacher le cathéter au tuyau du patient du système II de drainage externe CODMAN.

PRECAUTION : Prenez soin, lors de l'enlèvement et du remplacement du capuchon LUER-LOK, d'éviter une contamination.

C. Installation des composants externes

1. Fixez le clamp de la potence de drainage externe CODMAN, numéro de catalogue 82-1723, à une potence inter-ventriculaire.

2. Fixez le plateau EDS II sur le clamp de la potence. Egalisez le 0 rouge de la balance sur la ligne du centre de la tête du patient pour un drainage ventriculaire et sur le site de sortie du cathéter lombaire pour le drainage lombaire. Vérifiez que tous les cinq clamps coulissants sont ouverts.

Une ficelle et un mécanisme de verrouillage CORD-LOC sont fournis comme méthode alternative d'attachement. Pour une meilleure sécurité, nouez la ficelle au-dessus du mécanisme de verrouillage CORD-LOC une fois placé.

AVERTISSEMENT : La pression intracrânienne est contrôlée par la hauteur de la chambre du compte-gouttes par rapport au patient. Il est impératif, donc, que les positions de la chambre du compte-gouttes et du patient ne soient pas modifiées accidentellement.

AVERTISSEMENT : Les mouvements du patient, une fois la chambre du compte-gouttes positionnée, peuvent affecter la pression intracrânienne.

AVERTISSEMENT : Il faut prendre soin d'éviter de mouiller la décompression stérile de la chambre du compte-gouttes, car cela peut affecter le réglage de la pression. Si vous pensez que la décompression a été mouillée, il est recommandé de changer le sac de drainage et les tubes immédiatement par un 82-1721 ou des composants de 82-1720.

PRECAUTION : Il est recommandé de suspendre le sac de recueil au lieu de le coucher sur une surface pendant le transport. Si la décompression vient à

137

Questions? Contact FDA/CDRH/OCE/DID at CDRH-FOISTATUS@fda.hhs.gov or 301-796-8118

Records processed under FOIA Request 2013-6292; Released 10/17/14

être mouillée par un fluide à l'intérieur du sac pendant une période prolongée, cela peut provoquer une accumulation d'air. Cette accumulation réduirait la capacité du sac.

3. Faites glisser la flèche de la chambre du compte-gouttes au réglage approprié de la pression en mm HG ou cm H_2O.Tournez la vis noire dans le sens des aiguilles d'une montre pour serrer. NE SERREZ PAS TROP LA VIS.

NOTE : La flèche du réglage de la pression correspond au débouché du fluide à la valve de l'anti-reflux dans la chambre du compte-gouttes. La tubulure de l'orifice d'arrivée au-dessus de la valve d'anti-reflux n'a pas d'effet sur le réglage de la pression car les deux côtés de la tubulure sont équidistants au sommet de la flèche du réglage de la pression. Voir Figure 6.

4. Tournez les deux robinets d'arrêt vers la position Drainage Seulement. Voir Figure 7.

5. Attachez les tubes du contrôle de la pression intracrânienne (non-fournies) au robinet d'arrêt du plateau à 0 ou au robinet d'arrêt du tube du patient.

NOTE : La conception du système II de drainage externe CODMAN permet à l'air d'entrer dans la décompression stérile de la chambre du compte-gouttes. Cela permet de régler la pression intracrânienne par la hauteur de la chambre du compte-gouttes et d'éviter que l'aspiration ou la pression de retour du tube en aval ou du sac de recueil affectent le réglage. Il est normal d'avoir de l'air dans le tube en aval de la chambre du compte-gouttes.

6. Sensibilisez le système en utilisant une technique stérile avec une solution physiologique saline stérile. Purgez à travers la chambre du compte-gouttes via le connecteur LUER-LOK du tuyau du patient ou le port de contrôle du robinet d'arrêt du patient. Vérifiez s'il y a des fuites et si le fluide circule librement vers le sac de drainage.

7. Enlevez le capuchon LUER-LOK du connecteur LUER-LOK femelle de l'extrémité distale du cathéter ventriculaire ou lombaire. Attachez le connecteur au tuyau du patient.

D. Utilisation de l'équipment de contrôle de la pression

Une fois l'équipement de contrôle de la pression intracrânienne branché à un des ports de contrôle, la pression intracrânienne peut être suivie avec le robinet d'arrêt dans les deux positions comme expliqué ci-dessous.

1. La pression intracrânienne peut être contrôlée en tournant le robinet d'arrêt voulu pour que l'extrémité centrale pointe vers le branchement du cathéter, comme montré sur la Figure 8. Cette position arrête le flot du fluide vers le sac de recueil et le site d'injection. La pression du fluide se transmettra uniquement du cathéter au port de contrôle.

AVERTISSEMENT : Le robinet d'arrêt étant sur la position Contrôle Seulement, le fluide ne s'évacuera pas dans le sac de recueil. Le robinet d'arrêt ne doit pas être sur cette position si la dérivation est la fonction première. Remettez le robinet d'arrêt sur la position Drainage Seulement (Figure 7).

2. La pression intracrânienne peut être contrôlée aussi en permettant au fluide de s'écouler vers le sac de recueil. Tournez le robinet d'arrêt de manière à ce que l'extrémité la plus longue pointe vers le port de contrôle, comme montré sur la Figure 9.

AVERTISSEMENT : Le contrôle de la PIC avec le robinet d'arrêt sur la position de Drainage/Contrôle (Figure 9) peut provoquer de fausses lectures de la PIC. Le drainage et le contrôle simultanés du transducteur peuvent entraîner des résultats en forme d'ondes et des lectures de la PIC artificiellement basses comme l'a décrit Wilkinson.[6] Pour alterner le drainage et le contrôle de la PIC, placez le robinet d'arrêt, soit sur la position Drainage Seulement (Figure 7) pour le drainage de la PIC, soit sur la position Contrôle Seulement (Figure 8) pour le contrôle de la PIC.

E. Injection et prélèvement

1. L'extrémité centrale du robinet d'arrêt du patient pointant en direction inverse du port de contrôle (Figure 7, position de Drainage Seulement), fermez le clamp latéral immédiatement le plus éloigné du robinet d'arrêt. (**NOTE :** Les deux clamps coulissants sont fournis si une technique de double-clampage est nécessaire.)

2. Avant de ponctionner le site d'injection, aseptisez le site pour éviter une éventuelle contamination. (**NOTE :** Si nécessaire, vous pouvez utiliser une petite seringue pour enlever l'air accumulé dans le tube avant d'effectuer l'injection.)

3. Effectuez l'injection ou le prélèvement comme voulu. (**NOTE :** La capacité du tuyau du patient et du cathéter ventriculaire, du site d'injection à la pointe proche du cathéter, est approximativement de 1 cc.)

4. Déverrouillez le(s) clamp(s) après l'injection ou le prélèvement pour recommencer le drainage.

138

Questions? Contact FDA/CDRH/OCE/DID at CDRH-FOISTATUS@fda.hhs.gov or 301-796-8118

Records processed under FOIA Request 2013-6292; Released 10/17/14

F. Purge du système
Pour purger le système à partir du robinet d'arrêt jusqu'au sac de recueil, tournez le robinet d'arrêt du patient vers la position OFF de manière à ce que l'extrémité centrale pointe vers le site d'injection (Figure 10). Ouvrez tous les clamps. Injectez l'élément utilisé pour la purge dans le site d'injection.

AVERTISSEMENT : Lorsque la purge est faite, remettez le robinet d'arrêt sur la position Drainage Seulement (Figure 7).

G. Remplacement du sac de recueil et de la tubulure du système II de drainage externe CODMAN (numéro de catalogue 82-1721)

Respectez la technique stérile pendant le remplacement du sac de recueil et de la tubulure.

1. Bloquez le cathéter ventriculaire avec des forceps à patin.

2. Tournez l'un des deux robinets d'arrêt sur la position OFF (Figure 10).

3. Débranchez le LUER-LOK entre le cathéter et le tuyau du patient par un mouvement tournant dans le sens contraire des aiguilles d'une montre. Jetez la vieille tubulure, la chambre du compte-gouttes et le sac de recueil.

4. Installez le nouveau sac de recueil et la nouvelle tubulure.

H. Remplacement du sac de recueil du système de drainage externe CODMAN II (numéro de catalogue 82-1722)

Respectez la technique stérile lors du remplacement du sac de recueil. Référez-vous aux instructions jointes au sac de remplacement.

NOTE : Un site d'injection et de prélèvement en latex est situé au fond du sac de recueil. Pour permettre un drainage à partir du sac de recueil, enlevez ce site en coupant au-dessous du clamp en utilisant une technique stérile.

I. Détermination du taux de drainage
1. Mesurez le fluide dans le sac après une période de temps pré-déterminée.

2. Calculez le taux de drainage en divisant le volume prélevé par le temps écoulé.

Méthode alternative
Pour déterminer le taux de drainage lorsque le volume est faible (75 cc ou moins), effectuez la procédure suivante.

1. Verrouillez la tubulure de drainage 2 cm au-dessous de la chambre du compte-gouttes.

2. Après une période de temps pré-déterminée, mesurez l'accumulation du fluide dans la chambre du compte-gouttes en millimètres. Ne laissez pas la chambre du compte-gouttes se remplir complètement car cela provoquerait une humidité et un blocage de la décompression stérile. **NOTE :** La quantité de fluide à la base de la chambre du compte-gouttes et les 2 cm de la tubulure clampée (0,5 cc) ne doivent pas être compris dans ce calcul.

3. Calculez le taux de drainage en divisant le volume recueilli par le temps écoulé.

4. Déverrouillez la tubulure sous la chambre du compte-gouttes pour continuer le drainage.

AVERTISSEMENT : Il faut prendre soin de ne pas changer la position de la chambre du compte-gouttes lors du calcul du taux de drainage.

Références
Pour consulter la liste des références, voir la fin de la section en anglais.

Garantie
Johnson & Johnson Professional, Inc. garantit que cet appareil médical est sans défaut de matériel et de qualité. LA GARANTIE CI-DESSUS REMPLACE TOUTES LES AUTRES GARANTIES EXPRESSES OU SOUS-ENTENDUES, AINSI QUE TOUTES LES GARANTIES DE COMMERCIALISATION OU LEUR CARACTERE APPROPRIE POUR UN BUT PARTICULIER. L'utilisateur déterminera le caractère approprié de ce dispositif pour toute procédure de chirurgie. Johnson & Johnson Professional ne sera pas responsable des dommages et intérêts résultant d'un accident ou des dommages indirects de quelque nature que ce soit.

® CODMAN est une marque deposée de Johnson & Johnson Professional, Inc.
® LUER-LOK est une marque deposée de Becton, Dickinson, and Co.
® CORD-LOC est une marque deposée de ITW Nexus

139 96

Questions? Contact FDA/CDRH/OCE/DID at CDRH-FOISTATUS@fda.hhs.gov or 301-796-8118

Records processed under FOIA Request 2013-6292; Released 10/17/14

ESPAÑOL

INFORMACION IMPORTANTE
Léase antes de utilizar

Sistema de Drenaje Externo II de CODMAN®
Bolsa de recogida con tubo del Sistema de Drenaje Externo II de CODMAN

STERILE | EO

Esterilizado por óxido de etileno

Indicaciones

La utilización del Sistema de Drenaje Externo II de CODMAN está indicada para el drenaje de líquido cefalorraquídeo (LCR) y otros líquidos de características físicas similares como un medio de reducir y controlar el aumento de volumen y presión intracraneal cuando no es aconsejable la inserción de una derivación interna permanente.[1-4]

Descripción

El Sistema de Drenaje Externo II (código 82-1720) Fig. 1, está compuesto por:

- un catéter ventricular radio-opaco de silicona de 35 cm (DI 1,5 mm, DE 3,1 mm);
- un estilete recto de acero inoxidable de 36 cm para la colocación del catéter;
- un trócar curvo de acero inoxidable con un extremo con aristas para colocar el catéter subcutáneamente;
- un conector LUER-LOK® hembra con tapa para conectar el extremo distal del catéter;
- una cuerda doble de 24 pulgadas con mecanismo de cierre tipo CORD-LOC®;
- un panel posterior graduado de 27 cm (incorporado en la bandeja termoformada) con conversión de mm de mercurio para la regulación de la presión intracraneal (PIC) y con instrucciones en diferentes idiomas;
- una cámara de goteo de 75 ml equipada con una válvula anti-reflujo y una válvula atmosférica estéril;
- un juego de tubos de 157 cm equipado con dos clamps para conectar al paciente;
- dos llaves de paso de 4 vías, cada una con un portillo un conector LUER-LOK hembra para monitorización;
- dos puntos de inyección/toma de muestras, de látex; y
- una bolsa de recogida, de vinilo, graduada (en incrementos de 50 ml) estéril, con válvula atmosférica y con una capacidad de 700 ml.

La bolsa de recogida con tubo del Sistema de Drenaje Externo II (código 82-1721), Fig. 2, incluye sólo los componentes externos para utilizar como recambio. Se suministra un conector LUER-LOK hembra con tapa para conectar catéteres ventriculares de silicona, con un DI de 1,5 mm.

Todos los productos se suministran estériles.

NOTA: La medida del volumen de la bolsa recolectora es de ±20 ml, o ±5% del volumen del líquido real. La medida del volumen de la cámara de goteo es de ±1%.

Los siguientes productos se venden por separado para ser utilizados con el Sistema de Drenaje Externo II de CODMAN:

Código	Descripción
82-1722	Bolsas de recogida para el Sistema de Drenaje Externo II de CODMAN (estéril), paquete de 5
82-1723	Clamp para el Soporte de Gotero para el Sistema de Drenaje Externo II de CODMAN (no estéril)
82-1704	Línea de monitorización de la PIC desechable de CODMAN (estéril)
82-1705	Catéter para Drenaje Externo de CODMAN (estéril)
82-1706	Catéter para Drenaje Externo Lumbar con aguja Touhy de CODMAN (estéril)

Contraindicaciones

Este dispositivo no ha sido diseñado, comercializado o proyectado para otros usos excepto los indicados.

El uso de este dispositivo está contraindicado cuando existan infecciones del cuero cabelludo.

Está contraindicado en pacientes sometidos a tratamientos anticoagulantes o en aquellos que se conoce que sufren diátesis sangrante.

Está contraindicado donde no sea posible la supervisión permanente por personal entrenado.

140

97

Questions? Contact FDA/CDRH/OCE/DID at CDRH-FOISTATUS@fda.hhs.gov or 301-796-8118

Records processed under FOIA Request 2013-6292; Released 10/17/14

ADVERTENCIAS

La presión intracraneal se controla por medio de la altura de la cámara de goteo en relación al paciente. Es imperativo, por tanto, que no se modifique la altura de la cámara de goteo ni del paciente accidentalmente.

Hay que tener cuidado para evitar la humectación de la válvula atmosférica estéril de la cámara de goteo, ya que la humedad puede alterar la presión indicada. Si la válvula se moja, cambie inmediatamente los tubos y la bolsa con un código 82-1721 o con los componentes del código 82-1720.

La altura de la cámara de goteo y del paciente sólo debe ser cambiada por personal cualificado siguiendo las órdenes del médico.

Los movimientos del paciente después de haber colocado la cámara de goteo pueden afectar a la presión intracraneal.

Para minimizar el riesgo de dañar el catéter, hay que tener cuidado de no retirarlo después de haberlo insertado en la aguja. Si fuese preciso retirarlo, retirar el catéter y la aguja simultáneamente.

Apretar todas las conexiones LUER-LOK con la mano antes de usar el sistema por primera vez. Podrían haberse aflojado durante el transporte y manejo.

Con la llave de paso en la posición Sólo Monitorización, (Fig. 8) el líquido no drenará a la bolsa. Si la función principal es la derivación, la llave no deberá permanecer en esta posición. La llave deberá volver a la posición Sólo Drenaje (Fig. 7).

La monitorización de la PIC con la llave de cierre en la posición Monitorización/Drenaje (Figura 9) puede tener como consecuencia lecturas falsas de la PIC. La monitorización del transducer y el drenaje simultáneos pueden provocar artefactos en forma de onda y lecturas de la PIC artificialmente bajas como lo describió Wilkinson.[5] La monitorización y el drenaje de la PIC en forma alternada se pueden lograr ajustando la llave de cierre tanto a la posición Sólo Drenaje (Figura 7), para el drenaje de la PIC, como a la posición Sólo Monitorización (Figura 8), para la monitorización de la PIC.

Si se gira la llave de paso a la posición Sólo Monitorización o a la posición Off (Fig. 10) durante la monitorización de la presión intracraneal o irrigación del sistema, debe girarse de nuevo a la posición Sólo drenaje para continuar la derivación.

Deben tomarse las precauciones adecuadas para no alterar la altura de la cámara de goteo mientras se calcula la velocidad de drenaje.

PRECAUCIONES

Lea atentamente las instrucciones del fabricante cuando use componentes no suministrados por Codman.

En todas las fases de utilización de este producto es necesario emplear técnicas asépticas.

Tenga máximo cuidado para evitar el contacto del catéter ventricular con los dedos sin guantes, toallas, paños, talco o cualquier superficie fibrosa o granular.

La goma de silicona es altamente electrostática y, por tanto, atrae las partículas contaminantes que se encuentran en el aire o en superficies que pueden provocar reacción tisular.

La goma de silicona tiene una baja resistencia a cortes y desgarros, por tanto utilice pinzas cubiertas de goma cuando maneje el catéter.

Se recomienda suturar el catéter al conector LUER-LOK para evitar la desconexión de los componentes al retirar el catéter.

Ponga extremo cuidado cuando haga ligaduras para evitar cortes u oclusiones del tubo. No se recomienda utilizar ligaduras de acero inoxidable en productos de silicona.

Tenga cuidado cuando retire o cambie el tapón LUER-LOK para evitar la contaminación.

Para reducir la incidencia de infecciones, es recomendable que los cuidados del punto de salida del catéter y la conexión al drenaje externo se realicen de acuerdo con los protocolos establecidos para el cuidado de catéteres de hiperalimentación prolongada.

Es recomendable que la bolsa de recogida esté suspendida durante el transporte en lugar de apoyada sobre una superficie. La humedad provocada por movimientos del líquido en su interior podría dejar aire atrapado, reduciendo la capacidad de la bolsa.

Esterilidad

② Producto de un solo uso

Este producto es para UN SOLO USO. NO REESTERILIZAR. Use técnicas asépticas en todas las fases del manejo. Johnson & Johnson Professional no se hará responsable de ningún producto que

141

Questions? Contact FDA/CDRH/OCE/DID at CDRH-FOISTATUS@fda.hhs.gov or 301-796-8118

Records processed under FOIA Request 2013-6292; Released 10/17/14

CODMAN External Drainage System II
CODMAN External Drainage System II Collection Bag with Tubing

LCN 169847/E

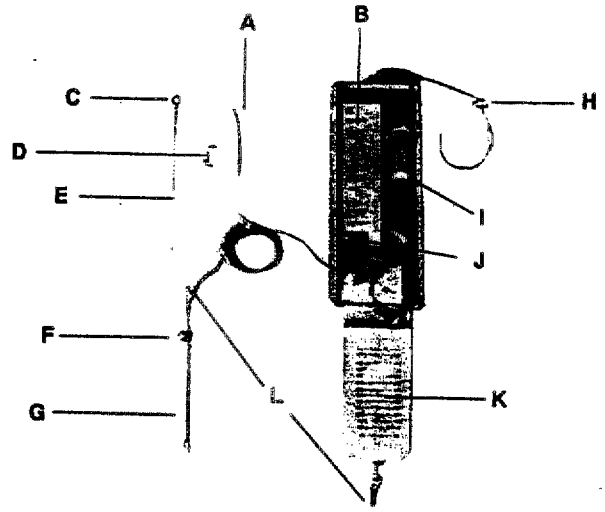

CODMAN External Drainage System II
A. Trocar
B. Measuring Backboard
C. Stylet
D. LUER-LOK Connector and LUER-LOK Cap
E. Ventricular Catheter
F. Patient Stopcock
G. Patient Line
H. CORD-LOC Locking Mechanism w/ String
I. Drip Chamber
J. System Stopcock
K. Collection Bag
L. Injection/Sampling Site

CODMAN Externe-Drainage-System II
A. Trokar
B. Meß-Rückentafel
C. Stylet
D. LUER-LOK und LUER-LOK-Kappe
E. Ventrikelkatheter
F. Patienten-Verschlußhahn
G. Patientenleitung
H. CORD-LOC Schließmechanismus mit Schnur
I. Tropfkammer
J. System-Verschlußhahn
K. Auffangbeutel
L. Injektions-/Probenbereich

Système II de drainage externe CODMAN
A. Trocart
B. Tableau de mesure
C. Stylet
D. Verrou LUER-LOK et capuchon LUER-LOK
E. Cathéter ventriculaire
F. Robinet d'arrêt du patient
G. Tuyau du patient
H. Mécanisme de verrouillage CORD-LOC avec ficelle
I. Chambre de compte-gouttes
J. Robinet d'arrêt du système
K. Sac de recueil
L. Sites d'injection/prélèvement

Sistema de Drenaje Externo II de CODMAN
A. Trócar
B. Panel de medición
C. Estilete
D. Seguro LUER-LOK y capuchón de seguridad LUER-LOK
E. Catéter ventricular
F. Llave de paso al paciente
G. Línea al paciente
H. Mecanismo de seguridad CORD-LOC con cuerda
I. Gotero
J. Llave de paso del sistema
K. Bolsa colectora
L. Punto de inyección/muestra

Sistema di drenaggio esterno II CODMAN
A. Trequarti
B. Pannello di misurazione
C. Mandrino
D. Connettore LUER-LOK ed tappo LUER-LOK
E. Catetere ventricolare
F. Rubinetto d'arresto del paziente
G. Tubo del paziente
H. Meccanismo di bloccaggio CORD-LOC con laccio
I. Camera di gocciolamento
J. Rubinetto d'arresto del sistema
K. Sacca di raccolta
L. Punti d'inoculazione/campionatura

Sistema de Drenagem Externa II CODMAN
A. Trócar
B. Escala de medição
C. Estilete
D. LUER-LOK e tampa LUER-LOK
E. Cateter ventricular
F. Torneira do doente
G. Linha do doente
H. Fio e mecanismo de fecho CORD-LOC
I. Câmara conta-gotas
J. Torneira do sistema
K. Saco de recolha
L. Ponto para injecção/recolha

CODMAN エクスターナルドレナージシステム II
A. トロカール
B. 測定用バックボード
C. スタイレット
D. LUER-LOK および LUER-LOK キャップ
E. 脳室カテーテル
F. 患者側活栓
G. 患者側チューブ
H. 縫合糸付きCORD-LOC ロッキングメカニズム
I. ドリップチャンバー
J. システム側活栓
K. 排液バッグ
L. 注入/サンプリング部

Questions? Contact FDA/CDRH/OCE/DID at CDRH-FOISTATUS@fda.hhs.gov or 301-796-8118

Records processed under FOIA Request 2013-6292; Released 10/17/14

2

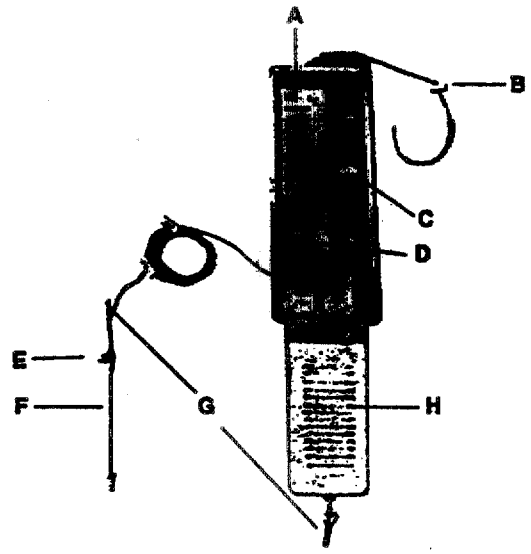

CODMAN EDS II Collection Bag and Tubing Set
A. Measuring Backboard
B. CORD-LOC Locking Mechanism w/ String
C. Drip Chamber
D. System Stopcock
E. Patient Stopcock
F. Patient Line
G. Injection/Sampling Sites
H. Collection Bag

CODMAN EDS II Auffangbeutel und Schlauchsatz
A. Meß-Rückentafel
B. CORD-LOC Schließmechanismus mit Schnur
C. Tropfkammer
D. System-Verschlußhahn
E. Patienten-Verschlußhahn
F. Patientenleitung
G. Injektions-/Probenbereich
H. Auffangbeutel

Sac de recueil et tubulure du système II de drainage externe CODMAN
A. Tableau de mesure
B. Mécanisme de verrouillage CORD-LOC avec ficelle
C. Chambre de compte-gouttes
D. Robinet d'arrêt du système
E. Robinet d'arrêt du patient
F. Tuyau du patient
G. Sites d'injection/prélèvement
H. Sac de recueil

Bolsa de Recolección y Juego de Tubos del Sistema de Drenaje Externo II de CODMAN
A. Panel de medición
B. Mecanismo de seguridad CORD-LOC con cuerda
C. Gotero
D. Llave de paso del sistema
E. Llave de paso al paciente
F. Línea al paciente
G. Punto de inyección/muestra
H. Bolsa colectora

Sacca di raccolta con tubi per EDS II CODMAN
A. Pannello di misurazione
B. Meccanismo di bloccaggio CORD-LOC con laccio
C. Camera di gocciolamento
D. Rubinetto d'arresto del sistema
E. Rubinetto d'arresto del paziente
F. Tubo del paziente
G. Punti d'inoculazione/campionatura
H. Sacca di raccolta

Conjunto de tubos e saco de recolha do EDS II CODMAN
A. Escala de medição
B. Fio e mecanismo de fecho CORD-LOC
C. Câmara conta-gotas
D. Torneira do sistema
E. Torneira do doente
F. Linha do doente
G. Ponto para injecção/recolha
H. Saco de Recolha

CODMAN エクスターナル ドレナージシステム チューブセット付き 排液バッグ
A. 測定用バックボード
B. 結合糸付き CORD-LOC ロッキング メカニズム
C. ドリップチャンバー
D. システム開栓柱
E. 患者開栓柱
F. 患者用チューブ
G. 注入/サンプリング部
H. 排液バッグ

143

Questions? Contact FDA/CDRH/OCE/DID at CDRH-FOISTATUS@fda.hhs.gov or 301-796-8118

Records processed under FOIA Request 2013-6292; Released 10/17/14

CODMAN External Drainage System II
CODMAN External Drainage System II Collection Bag with Tubing

LCN 169847/E

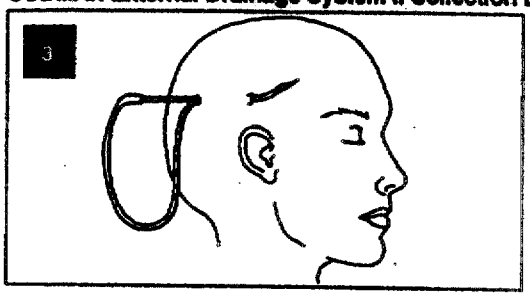

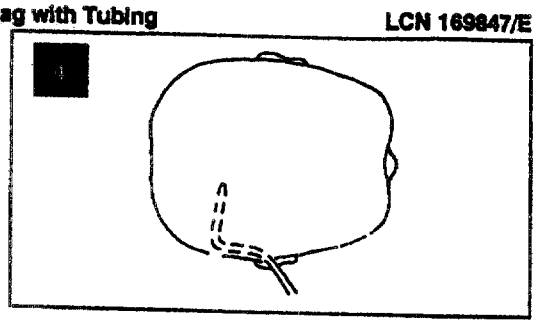

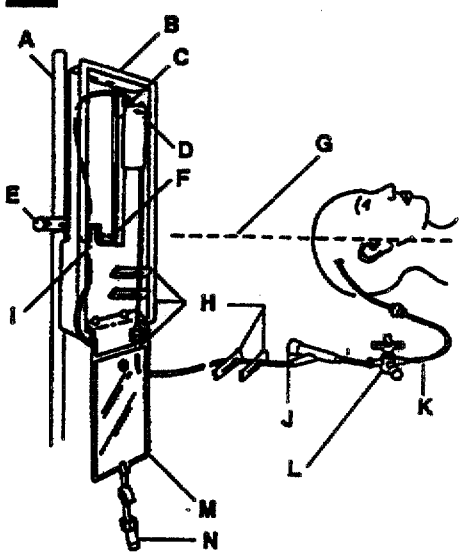

Installation of External Components

A. I.V. Pole
B. EDS II Tray
C. Black Screw
D. Drip Chamber Arrow
E. Clamp
F. Red "0"
G. Center Line of Patient's Head
H. Slide Clamps
I. System Stopcock
J. Injection Site
K. Patient Line
L. Patient Stopcock
M. Collection Bag
N. Injection/Sampling Site

Installation externer Komponenten

A. Infusionsständer
B. EDS II Tablett
C. Schwarze Schraube
D. Tropfkammer-markierstab
E. Klemme
F. Rotes „0"
G. Mittellinie des Patientenkopfes
H. Gleitklemmen
I. System-Verschlußhahn
J. Injektionsstelle
K. Patientenleitung
L. Patienten-Verschlußhahn
M. Auffangbeutel
N. Injektions-/Probenbereich

Installation des composants externes

A. Potence I.V.
B. Plateau du système EDS II
C. Vis noire
D. Flèche de la chambre du compte-gouttes
E. Pince
F. 0 rouge
G. Ligne centrale de la tête du patient
H. Pinces coulissantes
I. Robinet d'arrêt du système
J. Site d'injection
K. Tuyau du patient
L. Robinet d'arrêt du patient
M. Sac de recueil
N. Site d'injection/prélèvement

Installazione dei componenti esterni

A. Stativo I.V.
B. Contenitore EDS II
C. Vite nera
D. Freccia della camera di gocciolamento
E. Clamp
F. 0 rosso
G. Asse centrale della testa del paziente
H. Clamp scorrevoli
I. Rubinetto d'arresto del sistema
J. Punto d'inoculazione
K. Tubo del paziente
L. Rubinetto d'arresto del paziente
M. Sacca di raccolta
N. Punto d'inoculazione/campionatura

Instalación de los Componentes Externos

A. Polo I.V.
B. Panel del sistema EDS II
C. Tornillo negro
D. Flecha de la cámara de goteo
E. Clamp
F. 0 rojo
G. Línea central de la cabeza del paciente
H. Clamps deslizantes
I. Llave de paso del sistema
J. Punto de inyección
K. Línea al paciente
L. Llave de paso al paciente
M. Bolsa de recogida
N. Punto de inyección/muestra

Instalação dos Componentes Externos

A. Suporte I.V.
B. Tabuleiro EDS II
C. Parafuso preto
D. Seta da câmara conta-gotas
E. Clamp
F. 0 Vermelho
G. Linha do centro da cabeça do doente
H. Clamps deslizantes
I. Torneira do sistema
J. Ponto de injecção
K. Linha do doente
L. Torneira do doente
M. Saco de recolha
N. Ponto para injecção/recolha

体外回路の取り付け

A. I.V. ポール
B. EDS II トレー
C. 黒いネジ
D. ドリップチャンバー矢印
E. クランプ
F. 赤い0
G. 患者頭部の中線
H. スライドクランプ
I. システム閉栓
J. 注入部
K. 患者側チューブ
L. 患者側閉栓
M. 採液バッグ
N. 注入／サンプリング部

144 101

Questions? Contact FDA/CDRH/OCE/DID at CDRH-FOISTATUS@fda.hhs.gov or 301-796-8118

Records processed under FOIA Request 2013-6292; Released 10/17/14

6

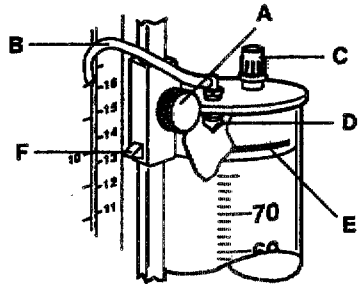

Pressure Setting of Drip Chamber
A. Black Adjustment Screw
B. Inlet Tubing "Peak"
C. Sterile Vent
D. Antireflux Valve
E. Drip Chamber Pressure Setting Arrow
F. Pressure Indicator

Druckeinstellung der Tropfkammer
A. Schwarze Einstellungsschraube
B. Inletschlauch „Höhe"
C. Steriler Ausgang
D. Antirückfluß-Ventil
E. Druckeinstellungsmarkierstab der Tropfkammer
F. Druckanzeiger

Réglage de la pression de la chambre du compte-gouttes
A. Vis de réglage noire
B. Tube d'entrée « Maximum »
C. Ventilation stérile
D. Valve anti-reflux
E. Flèche de réglage de la pression de la chambre du compte-gouttes
F. Indicateur de pression

Ajuste de Presión de la Cámara de Goteo
A. Tornillo de ajuste negro
B. Tubo de entrada "Máximo"
C. Válvula atmosférica
D. Válvula anti-reflujo
E. Flecha de indicación de la presión de la cámara de goteo
F. Indicador de la presión

Regolazione della pressione della camera di gocciolamento
A. Vite nera
B. Punto più alto
C. Sfiato sterile
D. Valvola antiriflusso
E. Freccia di regolazione di pressione
F. Indicatore di pressione

Regulação da Pressão da Câmara Conta-Gotas
A. Parafuso preto de ajuste
B. "Pico" do tubo de admissão
C. Ventilador estéril
D. Válvula antirefluxo
E. Seta de regulação da pressão da câmara conta-gotas
F. Indicador da pressão

ドリップチャンバーの圧設定
A. 黒い調節ネジ
B. 流入チューブ"最上部"
C. 滅菌通気孔
D. 逆流防止弁
E. ドリップチャンバー圧設定矢印
F. 圧指示器

7

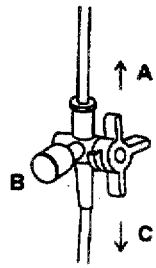

Drainage Only Position for Both Stopcocks
A. To Drip Chamber
B. Monitoring Port
C. To Patient

Stellung „Nur Drainage" für beide Verschlußhähne
A. Zur Tropfkammer
B. Monitoranschluß
C. Zum Patienten

Position de Drainage Seulement pour les deux robinets d'arrêt
A. Vers la chambre de compte-gouttes
B. Orifice de contrôle
C. Vers le patient

Posizione di Drenaggio Soltanto per i due rubinetti d'arresto
A. Alla camera di gocciolamento
B. Apertura di monitoraggio
C. Al paziente

Posición Sólo Drenaje para ambas Llaves de Paso
A. Hacia la cámara de goteo
B. Portillo de monitorización
C. Hacia el paciente

Posição de Apenas Drenagem para Ambas as Torneiras
A. Para a câmara conta-gotas
B. Abertura para monitorização
C. Para o doente

2つの活栓のドレナージの位置
A. ドリップチャンバーの方向
B. モニタリングポート
C. 患者の方向

Questions? Contact FDA/CDRH/OCE/DID at CDRH-FOISTATUS@fda.hhs.gov or 301-796-8118

Records processed under FOIA Request 2013-6292; Released 10/17/14

CODMAN External Drainage System II
CODMAN External Drainage System II Collection Bag with Tubing **LCN 169847/E**

B

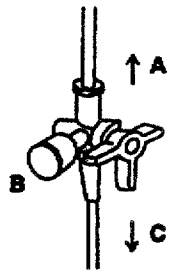

Monitoring Only Position for Both Stopcocks
A. To Drip Chamber
B. Monitoring Port
C. To Patient

Stellung „Nur Überwachung" für beide Verschlußhähne
A. Zur Tropfkammer
B. Monitoranschluß
C. Zum Patienten

Position de Contrôle Seulement pour les deux robinets d'arrêt
A. Vers la chambre de compte-gouttes
B. Orifice de contrôle
C. Vers le patient

Posición Sólo Monitorización para ambas Llaves de Paso
A. Hacia la cámara de goteo
B. Portillo de monitorización
C. Hacia el paciente

Posizione di Monitoraggio Soltanto per i due rubinetti d'arresto
A. Alla camera di gocciolamento
B. Apertura di monitoraggio
C. Al paziente

Posição de Apenas Monitorização para Ambas as Torneiras
A. Para a câmara conta-gotas
B. Abertura para monitorização
C. Para o doente

2つの活栓のモニタリングの位置
A. ドリップチャンバーの方向
B. モニタリングポート
C. 患者の方向

B

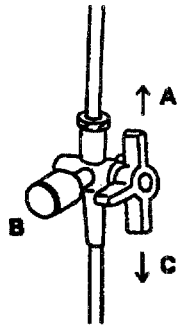

Monitoring/Drainage Only Position for Both Stopcocks
A. To Drip Chamber
B. Monitoring Port
C. To Patient

Stellung Überwachung/ Drainage für beide Verschlußhähne
A. Zur Tropfkammer
B. Monitoranschluß
C. Zum Patienten

Position de contrôle et de drainage pour les deux robinets d'arrêt
A. Vers la chambre de compte-gouttes
B. Orifice de contrôle
C. Vers le patient

Posizione di Monitoraggio/ Drenaggio per i due rubinetti d'arresto
A. Alla camera di gocciolamento
B. Apertura di monitoraggio
C. Al paziente

Posición de Monitorización/ Drenaje para ambas Llaves de Paso
A. Hacia la cámara de goteo
B. Portillo de monitorización
C. Hacia el paciente

Posição de Monitorização/ Drenagem para Ambas as Torneiras
A. Para a câmara conta-gotas
B. Abertura para monitorização
C. Para o doente

2つの活栓のモニタリング／ドレナージの位置
A. ドリップチャンバーの方向
B. モニタリングポート
C. 患者の方向

v

146

Questions? Contact FDA/CDRH/OCE/DID at CDRH-FOISTATUS@fda.hhs.gov or 301-796-8118

Records processed under FOIA Request 2013-6292; Released 10/17/14

10

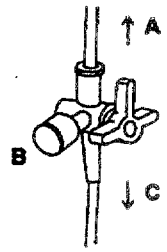

OFF Position for Both Stopcocks
A. To Drip Chamber
B. Monitoring Port
C. To Patient

OFF Position für beide Verschlußhähne
A. Zur Tropfkammer
B. Monitoranschluß
C. Zum Patienten

Position OFF pour les deux robinets d'arrêt
A. Vers la chambre de compte-gouttes
B. Orifice de contrôle
C. Vers le patient

Posición OFF para Ambas Llaves de Paso
A. Hacia la cámara de goteo
B. Portillo de monitorización
C. Hacia el paciente

Posizione OFF per i due rubinetti d'arresto
A. Alla camera di gocciolamento
B. Apertura di monitoraggio
C. Al paziente

Posição de Desligado para Ambas as Torneiras
A. Para a câmara conta-gotas
B. Abertura para monitorização
C. Para o doente

2 つの活栓の OFF の位置
A. ドリップチャンバーの方向
B. モニタリングポート
C. 患者の方向

Questions? Contact FDA/CDRH/OCE/DID at CDRH-FOISTATUS@fda.hhs.gov or 301-796-8118

Records processed under FOIA Request 2013-6292; Released 10/17/14

haya sido reesterilizado, ni aceptará para su abono o cambio ningún producto que se haya abierto, aunque no se haya usado.

Mientras el envase individual del producto no esté abierto ni dañado, el producto es estéril.

INSTRUCCIONES DE USO

A. Técnica Quirúrgica General: Catéter Ventricular

Ya que el punto de inserción del catéter ventricular es variable, las decisiones concernientes a la técnica de inserción y la verificación de la colocación adecuada deben tomarse por el cirujano de forma individual en cada caso.

1. El punto operatorio debe ser preparado y cubierto asépticamente.

2. Realice la cateterización con el estilete colocado en el catéter; retire el estilete y verifique la salida libre del fluido.

3. Una el extremo distal del catéter al extremo con aristas del trócar. Introduzca el extremo afilado del trócar en la incisión usada para la cateterización y canalice subcutáneamente a través de una distancia corta. Ver Figura 3.

4. Saque el trócar a través del cuero cabelludo. Teniendo cuidado para no desalojar la porción intraventricular del catéter, avanzar el catéter a través del túnel subcutáneo hasta que la curva del catéter no sobresalga de la incisión. Ver Figura 4. Ocluir el catéter con fórceps recubiertos de goma.

5. Asegure el catéter a la piel en el punto de salida. Suturar el punto de incisión. Cubrir el área con un apósito estéril.

6. Suture el extremo distal del catéter al extremo con aristas del conector de LUER-LOK hembra con la tapa colocada. No quite la tapa de la llave LUER-LOK hasta que esté listo para unir el catéter al juego de tubos para conectar al paciente del Sistema de Drenaje Externo II de CODMAN.

B. Técnica Quirúrgica General: Catéter Lumbar

Puesto que el punto de inserción del catéter lumbar es variable, el cirujano debe tomar en cada caso particular las decisiones concernientes a la técnica de inserción y comprobación del emplazamiento adecuado.

1. El punto operatorio debe ser preparado y cubierto asépticamente.

2. Utilice anestesia local.

3. Haga una pequena incisión en la región lumbar media, entre L-1 y L-3.

4. Con el obturador en su sitio, insertar la aguja de Touhy de 14 en el espacio subaracnoideo. Girar el bisel de la aguja hacia arriba en el caso de colocación cefálica o hacia abajo si la colocación es caudal. Para comprobar que el lumen de la aguja Touhy ha entrado al espacio subaracnoideo, retirar el obturador lentamente hasta que aparezca el líquido cefalorraquídeo. Si no aparece, reinsertar el obturador y volver a colocar la aguja.

5. Cuando la aguja se haya colocado con precisión y se obtenga líquido cefalorraquídeo transparente, retirar completamente el obturador e insertar el extremo abierto del catéter a través de la aguja Touhy en el espacio subaracnoideo al nivel deseado. Las marcas en el lateral del catéter son una ayuda para medir la distancia. **NOTA:** Para facilitar la colocación, humedecer el catéter en solución estéril.

ATENCION: para minimizar el riesgo de dañar el catéter, poner especial cuidado de no retirarlo después de haberlo insertado en la aguja. Si el catéter debe ser retirado, retirar el catéter y la aguja simultáneamente.

6. Retire la aguja Touhy sobre el extremo distal del catéter con un movimiento de vaivén al tiempo que se mantiene sujeto el catéter con unas pinzas de tejido recubiertas de goma.

PRECAUCION: la silicona tiene una baja resistencia a cortes y desgarros, por tanto utilice pinzas cubiertas de goma cuando maneje el catéter de silicona.

7. Corte el catéter cerca del lugar de incisión.

8. Inserte el extremo con aristas del conector LUER-LOK (con la tapa colocada) en el extremo distal del catéter y suturar los componentes hasta que no se separen.

PRECAUCION: se recomienda suturar el catéter al conector LUER-LOK para prevenir posibles perforaciones de los componentes cuando se retire.

PRECAUCION: ponga extremo cuidado cuando haga ligaduras para evitar cortes u oclusiones del tubo. No se recomienda utilizar ligaduras de acero inoxidable en productos de silicona.

9. Asegure el conector a la piel en el punto de salida del catéter mediante sutura a través de los agujeros en las lengüetas.

148

Questions? Contact FDA/CDRH/OCE/DID at CDRH-FOISTATUS@fda.hhs.gov or 301-796-8118

Records processed under FOIA Request 2013-6292; Released 10/17/14

10. Cubra la zona con un apósito estéril. No retirar la tapa LUER-LOK hasta que se vaya a conectar el catéter al juego de tubos para conectar al paciente del Sistema de Drenaje Externo II de CODMAN.

PRECAUCION: tenga cuidado cuando retire o cambie la tapa LUER-LOK para evitar la contaminación.

C. Instalación de Componentes Externos

1. Coloque el clamp para el Sistema de Drenaje Externo CODMAN, código 82-1723, a un soporte de gotero.

2. Instale la bandeja del sistema en el clamp. Nivelar el 0 rojo de la escala con la línea central de la cabeza del paciente para el drenaje ventricular; y con el punto de salida del catéter lumbar para el drenaje lumbar. Asegurarse de que los cinco clamps deslizantes estén abiertos.

Se incluye una cuerda con mecanismo de cierre CORD-LOC como método alternativo de colocación. Para mayor seguridad, anude la cuerda por encima del mecanismo de cierre CORD-LOC una vez que el sistema se encuentre en posición.

ATENCION: la presión intracraneal está controlada por la altura de la cámara de goteo respecto a la del paciente. Es imperativo, por tanto, que no se modifique la altura de la cámara de goteo ni del paciente accidentalmente.

ATENCION: los movimientos del paciente después de haber colocado la cámara de goteo pueden afectar a la presión intracraneal.

ATENCION: hay que tener cuidado para evitar la humectación de la válvula atmosférica estéril de la cámara de goteo, ya que la humedad puede alterar la presión indicada. Si la válvula se moja, cambie inmediatamente los tubos y la bolsa con un código 82-1721 o con los componentes del código 82-1720.

PRECAUCION: es recomendable que la bolsa esté suspendida durante el transporte en lugar de apoyada sobre una superficie. La humedad provocada por los movimientos del líquido en su interior podría dejar aire atrapado reduciendo la capacidad de la bolsa.

3. Deslice la flecha de la cámara de goteo hasta la presión deseada en milímetros de mercurio o centímetros de agua. Girar el tornillo negro en el sentido de las agujas del reloj para asegurarla. NO APRIETE DEMASIADO EL TORNILLO.

NOTA: la flecha de ajuste de presión corresponde a la salida del líquido en la válvula anti-reflujo dentro de la cámara de goteo. El tubo de entrada por encima de la válvula anti-reflujo no afecta al ajuste de presión debido a que ambos extremos son equidistantes al punto álgido desde la flecha de ajuste. Ver Figura 6.

4. Girar ambas llaves de paso a la posición de Sólo Drenaje. Ver Figura 7.

5. Las líneas de monitorización de la presión intracraneal (no suministradas) se conectan a la llave de paso de la bandeja en 0 o a la llave de paso de la línea hacia el paciente.

NOTA: el diseño del Sistema de Drenaje Externo II de CODMAN deja entrar aire por la válvula atmosférica estéril de la cámara de goteo. Esto permite fijar la presión intracraneal por medio de la altura de la cámara de goteo y evitar la succión o la presión inversa desde la línea de salida o la bolsa de recogida, que podrían afectar al ajuste. Es normal que haya aire en la línea de salida de la cámara de goteo.

6. Purgue el sistema con una solución salina estéril utilizando técnicas estériles. Irrigar hasta la cámara de goteo, a través del conector LUER-LOK de los tubos hacia el paciente, o la llave del portillo de monitorización del paciente. Verifique que no haya fugas y que el líquido se mueva libremente hacia la bolsa de drenaje.

7. Retire la tapa del conector LUER-LOK hembra del extremo distal del catéter ventricular o lumbar, y conéctelo a la línea del paciente.

D. Uso del Equipo de Monitorización de Presión

Con el equipo de medición de presión intracraneal conectado al portillo de monitorización, puede vigilarse la presión intracraneal (PIC) con la llave de paso en cualquiera de las dos posiciones, según se detalla a continuación.

1. La presión intracraneal puede controlarse girando la llave de paso para que el mango central apunte hacia la conexión del catéter, según se muestra en la Figura 8. Esto detiene el flujo del fluido hacia la bolsa de recogida y el punto de inyección. El fluido sólo circulará desde el catéter hasta el portillo de monitorización.

ADVERTENCIA: con la llave de paso en la posición Sólo Monitorización, el fluido no drenará hacia la bolsa de recogida. La llave de paso no debe permanecer en esta posición si la función primaria es la

149

Questions? Contact FDA/CDRH/OCE/DID at CDRH-FOISTATUS@fda.hhs.gov or 301-796-8118

Records processed under FOIA Request 2013-6292; Released 10/17/14

derivación. La llave de paso debe volverse a la posición Sólo Drenaje (ver Fig. 7).

2. La presión intracraneal también puede monitorizarse mientras se permite que el fluido drene hacia la bolsa de recogida. Gire la llave de paso para que el mango central apunte hacia el portillo de monitorización, según se muestra en la Figura 9.

ADVERTENCIA: la monitorización de la PIC con la llave de cierre en la posición Monitorización/Drenaje (Figura 9) puede tener como consecuencia lecturas falsas de la PIC. La monitorización del transducer y el drenaje simultáneos pueden provocar artefactos en forma de onda y lecturas de la PIC artificialmente bajas como lo describió Wilkinson.[5] La monitorización y el drenaje de la PIC en forma alternada se pueden lograr ajustando la llave de cierre tanto a la posición Sólo Drenaje (Figura 7), para el drenaje de la PIC, como a la posición Sólo Monitorización (Figura 8), para la monitorización de la PIC.

E. Inyección y Muestreo

1. Con el mango central de la llave de paso apuntando en sentido opuesto al portillo de monitorización (posición Sólo Drenaje, según se muestra en la Figura 7), cierre el clamp deslizante inmediatamente distal a la llave de paso. (**NOTA:** Se facilitan dos clamps por si se utiliza la técnica de doble fijación.)

2. Antes de punzar el punto de inyección, límpielo asépticamente para evitar posible contaminación. (**NOTA:** si se desea, puede usar una pequeña jeringa para eliminar el aire atrapado en la línea, antes de efectuar la inyección.)

3. Realice la inyección, o el muestreo, según necesidad. (**NOTA:** la capacidad del tubo hacia el paciente y el catéter ventricular, desde el punto de inyección hasta el extremo proximal del catéter es aproximadamente 1 cc.)

4. Vuelva a abrir el (los) clamp(s) después de la inyección o del muestreo para reanudar el drenaje.

F. Irrigación del Sistema

Para irrigar el sistema desde la llave de paso hasta la bolsa de recogida, gire la llave de paso a la posición Off (desconectado) para que el mango central apunte hacia el punto de inyección (ver Figura 10). Asegúrese que todos los clamps estén abiertos. Inyecte el medio irrigador en el punto de inyección.

ADVERTENCIA: cuando la irrigación se ha completado, la llave de paso debe volverse a la posición normal de drenaje (Fig. 7).

G. Recambio del Juego de Tubos y Bolsa de Recogida del Sistema de Drenaje Externo II de CODMAN (código 82-1721)

Utilice técnicas asépticas durante el proceso de recambio del juego de tubos y bolsa de recogida.

1. Cierre el catéter ventricular con fórceps revestidos de goma.

2. Gire cualquiera de las llaves de paso a la posición Off (ver Fig. 10).

3. Desconecte la llave LUER-LOK entre el catéter y el tubo hacia el paciente con un movimiento giratorio en sentido inverso a las agujas del reloj. Deseche el tubo usado, la cámara de goteo y la bolsa de recogida.

4. Instale el nuevo juego de tubos y bolsa de recogida.

H. Recambio de la Bolsa de Recogida del Sistema de Drenaje Externo II de CODMAN (código 82-1722)

Utilice técnicas asépticas mientras se cambia la bolsa. Lea las instrucciones que acompañan a la bolsa.

NOTA: en la parte inferior de la bolsa se encuentra una membrana de látex para inyección y toma de muestras. Para vaciar la bolsa eliminar esta membrana cortando por debajo de la pinza. Utilizar técnicas asépticas.

I. Determinación de la Velocidad de Drenaje

1. Mida el líquido en la bolsa después de haber pasado un tiempo previamente determinado.

2. Calcule la velocidad de drenaje dividiendo el volumen recogido por el tiempo transcurrido.

Método Alternativo

Para determinar la velocidad de drenaje cuando el volumen drenado es pequeño (75 cc o menos), siga el siguiente procedimiento:

1. Pince el tubo de drenaje 2 cm por debajo de la cámara de goteo.

2. Después de transcurrido un tiempo predeterminado, mida el líquido acumulado en la cámara de goteo en milímetros. No deje que la cámara de goteo se llene completamente, ya que la humedad podría bloquear la válvula atmosférica. **NOTA:** el líquido en la base de la cámara y los 2 cm del tubo pinzado (0,5 cc) no deben considerarse en la medida.

Questions? Contact FDA/CDRH/OCE/DID at CDRH-FOISTATUS@fda.hhs.gov or 301-796-8118

Records processed under FOIA Request 2013-6292; Released 10/17/14

3. Calcule la velocidad de drenaje dividiendo el volumen por el tiempo transcurrido.

4. Abra de nuevo el tubo para continuar el drenaje.

ATENCION: preste especial atención para no cambiar la altura de la cámara de goteo al efectuar la medida.

Bibliografía
Para consultar la bibliografía, vea el final de la sección en inglés.

Garantía
Johnson & Johnson Professional, Inc. garantiza que este dispositivo médico está exento de defectos, tanto en su material como en su manipulación. LAS GARANTIAS ANTERIORMENTE CITADAS ESTAN EN LUGAR DE OTRAS TANTO EXPRESADAS COMO IMPLICITAS, INCLUYENDO CUALQUIER GARANTIA DE COMERCIABILIDAD O CONVENIENCIA DE USO. La conveniencia de usar el producto para cualquier proceso quirúrgico será determinada por el usuario. Johnson & Johnson Professional no será responsable de daños accidentales o consecuentes de cualquier tipo.

® CODMAN es una marca registrada de Johnson & Johnson Professional, Inc.
® LUER-LOK es una marca registrada de Becton, Dickinson, and Co.
® CORD-LOC es una marca registrada de ITW Nexus

ITALIANO

INFORMAZIONI IMPORTANTI
Da leggere prima dell'uso

Sistema di drenaggio esterno II CODMAN®
Sacca di raccolta con tubi per il Sistema di drenaggio esterno II CODMAN

STERILE	EO

Sterilizzato ad ossido di etilene

Indicazioni
Il sistema di drenaggio esterno II CODMAN è indicato per il drenaggio di liquido cefalorachidiano (CSF) ed altri liquidi aventi simili caratteristiche fisiche per la riduzione ed il controllo dell'aumento di volume e pressione intracranici nei casi in cui è controindicata una derivazione interna permanente.[1-4]

Descrizione
Il sistema di drenaggio esterno II (codice 82-1720), rappresentato in Figura 1, comprende:

- un catetere ventricolare in silicone radiopaco da 35 cm, D.I. 1,5 mm e D.E. 3,1 mm;
- un mandrino retto in acciaio inossidabile da 36 cm di lunghezza per l'inserimento del catetere;
- un trequarti curvo in acciaio inossidabile con estremità a punta per l'inserimento sottocutaneo del catetere;
- un connettore LUER-LOK® femmina con tappo per il collegamento dell'estremità distale del catetere
- un laccio doppio da 61 cm con meccanismo di bloccaggio CORD-LOC®;
- un pannello di misurazione da 27 cm (incorporato nel vassoio termoformato) per la regolazione della pressione intracranica (ICP) con conversione in mm Hg ed istruzioni in più lingue;
- una camera di gocciolamento da 75 ml dotata di valvola antiriflusso e sfiato atmosferico sterile;
- un tubo del paziente da 157 cm con due clamp;
- due rubinetti d'arresto a quattro vie, ciascuno con connettore LUER-LOK femmina per monitoraggio;
- due punti d'inoculazione/campionatura in lattice; e
- una sacca di raccolta vinilica sterile, dotata di sfiato, avente capacità di 700 ml, graduata con divisione della scala in 50 ml.

La sacca di raccolta con tubi per il sistema di drenaggio esterno II (codice 82-1721), rappresentata in Figura 2, è costituita dai soli componenti esterni necessari per la sostituzione. Viene fornito un connettore LUER-LOK femmina con tappo per il collegamento a cateteri ventricolari in silicone con D.I. 1,5 mm.

I prodotti di cui sopra sono forniti sterili.

NOTA: Misura di volume della sacca di racolta, ±20 ml, o ±5% del volume liquido reale. Misura di volume della camera di gocciolamento, ±1%.

I seguenti componenti sono disponibili separatamente per impiego col sistema di drenaggio esterno II CODMAN:

Questions? Contact FDA/CDRH/OCE/DID at CDRH-FOISTATUS@fda.hhs.gov or 301-796-8118

Records processed under FOIA Request 2013-6292; Released 10/17/14

Codice	Descrizione
82-1722	Sacca di raccolta (sterile) per sistema di drenaggio esterno II CODMAN, confezione da 5
82-1723	Clamp per stativo (non-sterile) per sistema di drenaggio esterno II CODMAN
82-1704	Tubo di monitoraggio (sterile) della pressione intracranica CODMAN monouso
82-1705	Set per cateterismo (sterile) per drenaggio esterno CODMAN
82-1706	Catetere (sterile) per drenaggio esterno lombare CODMAN con ago di Touhy

Controindicazioni

Il prodotto non può essere venduto od utilizzato per usi diversi da quelli indicati, per i quali è stato espressamente studiato.

L'impiego del prodotto è controindicato in presenza d'infezione del cuoio capelluto.

Il prodotto è controindicato in pazienti trattati con anticoagulanti o affetti da diatesi emorragica.

Il prodotto è controindicato quando non sia disponibile personale specializzato 24 ore su 24.

AVVERTENZE

La pressione intracranica viene controllata regolando l'altezza della camera di gocciolamento rispetto al paziente. E' pertanto indispensabile evitare d'alzare od abbassare accidentalmente la camera o il paziente.

Occorre evitare che lo sfiato sterile della camera di gocciolamento si bagni, perché in tal caso si potrebbe produrre un'alterazione della regolazione pressoria. Se lo sfiato si bagna, sostituire immediatamente il tubo e la sacca di drenaggio col prodotto codice 82-1721 o con componenti della confezione codice 82-1720.

L'altezza della camera di gocciolamento e del paziente può essere modificata esclusivamente da personale qualificato su espressa richiesta del medico.

Lo spostamento del paziente successivamente al posizionamento della camera di gocciolamento può modificare la pressione intracranica.

Per ridurre al minimo il rischio di danneggiare il catetere, evitare di tirare il catetere dopo averlo inserito nell'ago. Dovendo togliere il catetere, tirare contemporaneamente ago e catetere.

Prima di utilizzare il sistema per la prima volta, stringere manualmente tutti gli attacchi LUER-LOK, in quanto potrebbero essersi allentati durante il trasporto e la manipolazione.

Con rubinetto d'arresto in posizione di Monitoraggio Soltanto (Figura 8), il liquido non defluisce nella sacca di raccolta. Se il sistema viene utilizzato per lo shunting, il rubinetto d'arresto non dev'essere in questa posizione, ma dev'essere riportato nella posizione Drenaggio Soltanto (Figura 7).

Il monitoraggio della pressione intracranica con il rubinetto d'arresto in posizione di Monitoraggio/Drenaggio (vedere Figura 9) potrebbe causare false rilevazioni della pressione intracranica. Il simultaneo utilizzo del drenaggio e del monitoraggio del trasduttore può causare onde artefatte e rilevazioni della pressione intracranica artificiosamente più basse, come descritto da Wilkinson.[5] Il drenaggio e il monitoraggio alternato della pressione intracranica può essere ottenuto sistemando il rubinetto d'arresto o nella posizione di Drenaggio Soltanto (vedere Figura 7) per il drenaggio o nella posizione di Monitoraggio Soltanto (vedere Figura 8) per il monitoraggio.

Se il rubinetto d'arresto è stato portato in posizione di Monitoraggio Soltanto o di OFF (Figura 10) durante il monitoraggio della pressione intracranica o il lavaggio del sistema, per riattivare lo shunting dev'essere riportato in posizione Drenaggio Soltanto.

Si deve fare attenzione a non alzare od abbassare la camera di gocciolamento durante il calcolo della velocità di drenaggio.

PRECAUZIONI

Se si usano componenti di marche diverse dalla Codman, consultare le istruzioni della casa.

In tutte le fasi d'impiego del prodotto è necessario adottare una tecnica sterile.

Prestare la massima attenzione per impedire che il catetere ventricolare entri in contatto con dita nude, asciugamani, teli, talco o materiali filacciosi o granulosi.

La gomma siliconica è altamente elettrostatica, per cui attrae le particelle presenti nell'aria e i contaminanti superficiali con conseguenti possibili reazioni a livello dei tessuti.

La gomma siliconica presenta una bassa resistenza al taglio ed allo strappo, per cui occorre manipolare il catetere servendosi di una pinza con inserto in gomma.

152

Questions? Contact FDA/CDRH/OCE/DID at CDRH-FOISTATUS@fda.hhs.gov or 301-796-8118

Records processed under FOIA Request 2013-6292; Released 10/17/14

Si raccomanda di suturare il catetere all'attacco LUER-LOK per impedire che i componenti si stacchino quando viene tolto il catetere.

Nell'eseguire le legature, fare attenzione a non tagliare od occludere i tubi. Coi prodotti in silicone è sconsigliato l'uso di legature in acciaio inossidabile.

Per impedire la contaminazione prendere le opportune precauzioni nel togliere e nel rimettere il tappo LUER-LOK.

Per ridurre l'incidenza d'infezioni, si raccomanda di trattare il punto d'uscita del catetere e l'attacco al drenaggio esterno con le opportune precauzioni che si usano con le cateteri per iperalimentazione a lungo termine.

Durante il trasporto si raccomanda di tenere sospesa la sacca di raccolta, senza farla appoggiare su una superficie. Se il liquido presente nella sacca bagna lo sfiato per un lungo periodo di tempo si può produrre intrappolamento d'aria, con conseguente riduzione della capacità della sacca.

Sterilità

② Prodotto monouso

Il prodotto è MONOUSO E NON DEV'ESSERE RISTERILIZZATO. Seguire una tecnica sterile in tutte le fasi di manipolazione. La Johnson & Johnson Professional declina ogni responsabilità per eventuali prodotti risterilizzati e non accetta rese in rimborso o in sostituzioni di eventuali prodotti aperti e non usati.

Il prodotto è sterile a condizione che le singole confezioni non vengano aperte o danneggiate.

Istruzioni per l'uso

A. Tecnica chirurgica generale: Catetere ventricolare

Stante la molteplicità dei possibili punti d'inserimento dei cateteri ventricolari, la decisione relativa alla tecnica d'inserimento ed alla verifica del corretto inserimento è di competenza del chirurgo caso per caso.

1. Preparare asetticamente e ricoprire con teli sterili il punto operativo.

2. Eseguire il cateterismo col mandrino nel catetere; togliere il mandrino, verificando che il liquido defluisca regolarmente.

3. Collegare l'estremità distale del catetere all'estremità a punta del trequarti. Inserire l'estremità a punta del trequarti nell'incisione praticata per il cateterismo e canalizzare per via sottocutanea per un breve tratto. Vedere Figura 3.

4. Far uscire il trequarti dal cuoio capelluto. Facen attenzione a non spostare la porzione intraventric lare del catetere, introdurre quest'ultimo nel canal sottocutaneo fino a scomparsa dell'ansa. Vedere Figura 4. Occludere il catetere mediante una pinz con inserto in gomma.

5. Fissare il catetere alla cute nel punto d'uscita. Suturare il punto d'incisione. Coprire la zona con una medicazione sterile.

6. Fissare l'estremità distale del catetere all'estremità a punta del connettore LUER-LOK femmina con relativo tappo attaccato. Togliere il tappo soltanto un attimo prima di collegare il catetere al tub del paziente del sistema di drenaggio esterno il CODMAN.

B. Tecnica chirurgica generale: Catetere lomb

Stante la molteplicità dei punti d'inserimento dei cateteri lombari, la decisione relativa alla tecnica d'inserimento ed alla verifica del corretto inserime è di competenza del chirurgo caso per caso.

1. Preparare asetticamente e ricoprire con teli ste il punto operativo.

2. Procedere in anestesia locale.

3. Praticare una piccola incisione nella regione medio-lombare tra L-1 ed L-3.

4. Con otturatore in situ, inserire la punta dell'ago Touhy 14 gauge nello spazio subaracnoideo. Ruotare lo smusso dell'ago verso l'alto per inserimento cefalico o verso il basso per quello caudale Per accertarsi che il lume dell'ago di Touhy sia entrato nello spazio subaracnoideo, disinserire lentamente l'otturatore fino ad ottenere la compar di liquido cefalorachidiano. Se non compare liquid cefalorachidiano, reinserire l'otturatore e reintrodurre l'ago.

5. Una volta introdotto esattamente l'ago e ottenut liquido cefalorachidiano esente da cristalli, disinserire completamente l'otturatore ed inserire l'estremità perforata del catetere attraverso l'ago di Tou nello spazio subaracnoideo fino alla profondità voluta. I riferimenti presenti sul lato del catetere aiutano a misurare la distanza. N.B.: Per facilitar l'inserimento, immergere il catetere in una soluzio sterile.

AVVERTENZA: Per ridurre al minimo il rischio di danneggiare il catetere, fare attenzione a non estrarlo dopo l'inserimento nell'ago. Dovendo togliere il catetere, estrarre contemporaneament ago e catetere.

133

Questions? Contact FDA/CDRH/OCE/DID at CDRH-FOISTATUS@fda.hhs.gov or 301-796-8118

Records processed under FOIA Request 2013-6292; Released 10/17/14

6. Estrarre l'ago di Touhy oltre l'estremità distale del catetere con una manovra va' e vieni mantenendo fermo il catetere con una pinza per tessuti con inserto in gomma.

PRECAUZIONE: Il silicone presenta una bassa resistenza al taglio ed allo strappo, pertanto per manipolare i cateteri in silicone servirsi di una pinza con inserto in gomma.

7. Tagliare il catetere vicino al punto d'incisione.

8. Inserire l'estremità a punta del connettore LUER-LOK (col tappo) nell'estremità distale del catetere e suturare i componenti uno con l'altro.

PRECAUZIONE: Si raccomanda di suturare il catetere al attacco LUER-LOK in modo da evitare il distacco dei componenti quando viene tolto il catetere.

PRECAUZIONE: Nell'eseguire le legature, fare attenzione a non tagliare od occludere i tubi. Coi prodotti in silicone è sconsigliato l'uso di legature in acciaio inossidabile.

9. Fissare il connettore alla cute in corrispondenza del punto d'uscita del catetere suturando attraverso i fori della flangia.

10. Coprire la zona con medicazione sterile. Togliere il tappo LUER-LOK soltanto un attimo prima di collegare il catetere al tubo del paziente del sistema di drenaggio esterno II CODMAN.

PRECAUZIONE: Attenzione ad evitare contaminazioni quando si toglie e si rimette il tappo LUER-LOK.

C. Installazione dei componenti esterni

1. Fissare la clamp per stativo del drenaggio esterno CODMAN (codice 82-1723) allo stativo I. V.

2. Montare saldamente il vassoio contenitore del sistema di drenaggio esterno II sulla clamp. Portare lo 0 rosso della scala in corrispondenza dell'asse centrale della testa del paziente nel caso del drenaggio ventricolare e in corrispondenza del punto d'uscita del catetere lombare nel caso del drenaggio lombare. Accertarsi che tutti e cinque le clamp scorrevoli siano aperte.

Sono disponibili, in alternativa, un laccio ed un meccanismo di bloccaggio CORD-LOC. Per una maggiore sicurezza annodare il laccio sopra al meccanismo di bloccaggio CORD-LOC dopo l'applicazione.

AVVERTENZA: La pressione intracranica viene controllata tramite l'altezza della camera di gocciolamento rispetto al paziente. E' pertanto indispensabile che né la camera né il paziente vengano sollevati od abbassati accidentalmente.

AVVERTENZA: Lo spostamento del paziente successivamente al posizionamento della camera di gocciolamento può influire sulla pressione intracranica.

AVVERTENZA: Occorre evitare che lo sfiato sterile della camera di gocciolamento si bagni, perché in tal caso si potrebbe produrre un'alterazione della regolazione pressoria. Se c'è il sospetto che lo sfiato si sia bagnato, si raccomanda di sostituire immediatamente il tubo e la sacca di drenaggio col prodotto codice 82-1721 o con componenti della confezione codice 82-1720.

PRECAUZIONE: Durante il trasporto si raccomanda di tenere sospesa la sacca di raccolta anziché appoggiarla su una superficie. Se il liquido presente nella sacca bagna lo sfiato per un lungo periodo di tempo può aversi intrappolamento d'aria, con conseguente riduzione della capacità della sacca.

3. Portare la freccia della camera di gocciolamento sul valore di regolazione della pressione richiesta in mm HG o cm H_2O, fissandola ruotando la vite nera in senso orario. NON STRINGERE TROPPO LA VITE.

N.B.: La freccia di regolazione della pressione corrisponde all'uscita del liquido in corrispondenza della valvola antiriflusso all'interno della camera di gocciolamento. Il tubo d'ingresso a monte della valvola antiriflusso non influisce in alcun modo sulla regolazione della pressione in quanto i due lati del tubo presentano la stessa distanza dal punto più alto rispetto alla freccia di regolazione della pressione. Vedere Figura 6.

4. Ruotare i due rubinetti d'arresto portandoli sulla posizione di Drenaggio Soltanto. Vedere Figura 7.

5. I tubi di monitoraggio della pressione intracranica (non compresi nella confezione) vanno collegati al rubinetto d'arresto del vassoio in corrispondenza dello 0 o al rubinetto d'arresto sul tratto che va al paziente.

N.B.: La concezione del sistema di drenaggio esterno II CODMAN permette l'entrata dell'aria nello sfiato sterile della camera di gocciolamento. Ciò consente la regolazione della pressione intracranica mediante l'altezza della camera di gocciolamento ed evita altresì che la pressione d'aspirazione o la contropressione dal tubo a valle o dalla sacca di raccolta possano influire sulla regolazione. E'

124

Questions? Contact FDA/CDRH/OCE/DID at CDRH-FOISTATUS@fda.hhs.gov or 301-796-8118

Records processed under FOIA Request 2013-6292; Released 10/17/14

normale la presenza d'aria nel tubo a valle della camera di gocciolamento.

6. Avviare il sistema adottando una tecnica sterile con l'uso di soluzione fisiologica sterile, inviandola alla camera di gocciolamento attraverso il connettore LUER-LOK sul tubo del paziente o l'apertura di monitoraggio del rubinetto del paziente. Verificare l'assenza di perdite ed il corretto deflusso verso la sacca di drenaggio.

7. Togliere il tappo dal connettore LUER-LOK femmina dell'estremità distale del catetere ventricolare o lombare. Collegare il connettore al tubo del paziente.

D. Impiego del dispositivo di monitoraggio della pressione

Con dispositivo di monitoraggio della pressione intracranica collegato ad una delle due aperture di monitoraggio, è possibile monitorare la pressione intracranica con rubinetto d'arresto in una delle due posizioni, come sotto indicato.

1. E' possibile monitorare la pressione intracranica ruotando il rubinetto d'arresto prescelto in modo che l'aletta centrale sia rivolta verso l'attacco del catetere, come illustrato in Figura 8. Così facendo si blocca il deflusso del liquido verso la sacca di raccolta ed il punto d'inoculazione. La pressione del liquido viene trasmessa solamente dal catetere all'apertura di monitoraggio.

AVVERTENZA: Con rubinetto d'arresto in posizione di Monitoraggio Soltanto, il liquido non defluisce nella sacca di raccolta. Se il sistema viene utilizzato per lo shunting, il rubinetto d'arresto non dev'essere in questa posizione, ma dev'essere riportato nella posizione Drenaggio Soltanto (vedere Figura 7).

2. La pressione intracranica può essere monitorata anche lasciando defluire il liquido nella sacca di raccolta. Ruotare il rubinetto d'arresto in modo che l'aletta centrale sia rivolta verso l'apertura di monitoraggio, come illustrato in Figura 9.

AVVERTENZA: Il monitoraggio della pressione intracranica con il rubinetto d'arresto in posizione di Monitoraggio/Drenaggio (vedere Figura 9) potrebbe causare false rilevazioni della pressione intracranica. Il simultaneo utilizzo del drenaggio e del monitoraggio del trasduttore può causare onde artefatte e rilevazioni della pressione intracranica artificiosamente più basse, come descritto da Wilkinson.[5] Il drenaggio e il monitoraggio alternato della pressione intracranica può essere ottenuto sistemando il rubinetto d'arresto o nella posizione di solo drenaggio (vedere Figura 7) per il drenaggio o nella posizione di Monitoraggio Soltanto (vedere Figura 8) per il monitoraggio.

E. Inoculazione e campionatura

1. Con aletta centrale del rubinetto d'arresto del paziente in senso opposto all'apertura di monitoraggio (posizione di Drenaggio Soltanto, vedi Figura 7), chiudere la clamp scorrevole immediatamente distale rispetto al rubinetto d'arresto. (N.B.: La confezione contiene due clamp scorrevoli da usare in caso d'impiego d'una tecnica a doppio clampaggio.)

2. Prima di bucare il punto d'inoculazione, pulirlo asetticamente in modo da evitare possibili contaminazioni. (N.B.: Volendo, si può usare una piccola siringa per togliere l'eventuale aria rimasta intrappolata nel tubo prima di eseguire l'inoculazione.)

3. Procedere all'inoculazione o alla campionatura, a seconda dei casi. (N.B.: La capacità del tubo del paziente e del catetere ventricolare, dal punto d'inoculazione alla punta prossimale del catetere, è di circa 1 cc.)

4. Riaprire la clamp (o le clamp) dopo l'inoculazione o la campionatura per riattivare il drenaggio.

F. Lavaggio del sistema

Per lavare il sistema dal rubinetto d'arresto alla sacca di raccolta, portare il rubinetto del paziente sulla posizione OFF in modo che l'aletta centrale si rivolta verso il punto d'inoculazione (vedere Figura 10). Aprire tutte le clamp. Iniettare il mezzo di lavaggio nel punto d'inoculazione.

AVVERTENZA: Una volta completato il lavaggio, il rubinetto d'arresto dev'essere riportato nella posizione di Drenaggio Soltanto (Figura 7).

G. Sostituzione del set di tubi e sacca di raccolta per sistema di drenaggio esterno II CODMAN (codice 82-1721)

Seguire una tecnica sterile in tutte le fasi della sostituzione del set di tubi e sacca di raccolta.

1. Occludere il catetere ventricolare con una pinza con inserto in gomma.

2. Portare uno qualsiasi dei rubinetti d'arresto in posizione OFF (vedere Figura 10).

3. Scollegare l'attacco LUER-LOK tra il catetere ed il tubo del paziente con movimento di rotazione antiorario. Gettare i tubi, la camera di gocciolamento e la sacca di raccolta usati.

4. Installare la sacca di raccolta ed il set di tubi nuovi

115

112

Questions? Contact FDA/CDRH/OCE/DID at CDRH-FOISTATUS@fda.hhs.gov or 301-796-8118

Records processed under FOIA Request 2013-6292; Released 10/17/14

H. Sostituzione della sacca di raccolta per sistema di drenaggio esterno II CODMAN (codice 82-1722)

Seguire una tecnica sterile in tutte le fasi della procedura di sostituzione della sacca di raccolta. Vedere le istruzioni fornite assieme alla sacca di sostituzione.

N.B.: Sul fondo della sacca di raccolta è previsto un punto d'inoculazione e campionatura in lattice. Per consentire il drenaggio della sacca di raccolta, rimuovere tale punto tagliando sotto la clamp con tecnica sterile.

I. Determinazione della velocità di drenaggio

1. Misurare il liquido nella sacca dopo che sia trascorso un periodo di tempo predeterminato.

2. Calcolare la velocità di drenaggio dividendo il volume raccolto per il tempo trascorso.

Metodo alternativo

Per determinare la velocità di drenaggio in presenza di volumi ridotti (75 cc o meno), seguire la seguente procedura:

1. Clampare il tubo di drenaggio 2 cm sotto la camera di gocciolamento.

2. Una volta trascorso un periodo di tempo predeterminato, misurare il liquido accumulato nella camera di gocciolamento in millilitri. Non lasciar riempire completamente la camera di gocciolamento, perché ciò bagnerebbe lo sfiato sterile, bloccandolo. N.B.: Nella misura non si deve tener conto della quantità di liquido nella base della camera di gocciolamento e nel 2 cm di tubo clampato (0,5 cc).

3. Calcolare la velocità di drenaggio dividendo il volume raccolto per il tempo trascorso.

4. Togliere la clamp dal tubo sotto la camera di gocciolamento per continuare il drenaggio.

AVVERTENZA: Durante il calcolo della velocità di drenaggio, fare attenzione a non alzare o abbassare la camera di gocciolamento.

Bibliografia

Il materiale bibliografico è elencato alla fine della sezione in inglese.

Garanzia

La Johnson & Johnson Professional, Inc. garantisce il presente prodotto esente da difetti di materiali ed esecuzione. LE GARANZIE SOPRA RIPORTATE SONO SOSTITUTIVE DI OGNI ALTRA GARANZIA ESPRESSA O IMPLICITA, COMPRESE EVENTUALI GARANZIE DI COMMERCIABILITA O DI IDONEITA PER SCOPI SPECIFICI. L'idoneità all'uso del prodotto per le operazioni chirurgiche dev'essere determinata dall'utente. La Johnson & Johnson Professional declina ogni responsabilità per danni indiretti o consequenziali di qualsiasi natura.

® CODMAN è un marchio registrato della Johnson & Johnson Professional, Inc.
® LUER-LOK è un marchio registrato della Becton, Dickinson, and Co.
® CORD-LOC è un marchio registrato della ITW Nexus

[redacted]

INFORMAÇÕES IMPORTANTES

É favor ler antes de usar

Sistema de Drenagem Externa II CODMAN®
Conjunto de Tubos e Saco de Recolha do Sistema de Drenagem Externa II CODMAN

STERILE	EO

Esterilização por óxido de etileno

Indicações

O Sistema de Drenagem Externa II CODMAN está indicado para a drenagem de líquido céfalo-raquidiano (LCR) e de outros fluidos de características físicas semelhantes, para reduzir e controlar o volume e pressão intracraniana elevados, quando a inserção de um shunt interno permanente não é aconselhável.[1-4]

Descrição

O Sistema de Drenagem Externa II (nº de catálogo 82-1720), Figura 1, é composto por:

- um cateter ventricular de silicone radiopaco (1,5 mm D.I., 3,1 mm D.E.) com 35 cm de comprimento;

156

Questions? Contact FDA/CDRH/OCE/DID at CDRH-FOISTATUS@fda.hhs.gov or 301-796-8118

Records processed under FOIA Request 2013-6292; Released 10/17/14

- um estilete recto de aço inoxidável de 36 cm para colocação do cateter;
- um trócar curvo de aço inoxidável com uma extremidade farpada para puxar o cateter subcutaneamente;
- um LUER-LOK® fêmea e uma tampa de LUER-LOK para ligar a extremidade distal do cateter;
- um fio duplo de 61 cm com mecanismo de fecho CORD-LOC®;
- uma escala de medição de 27 cm (incorporada no tabuleiro termoformado) para regulação da pressão intracraniana (PIC) com conversão a mm Hg, e instruções em várias línguas;
- uma câmara conta-gotas de 75 ml equipada com válvula anti-refluxo e ventilador atmosférico estéril;
- uma linha do doente de 157 cm, equipada com dois clamps;
- duas torneiras de quatro vias cada qual com abertura para LUER-LOK fêmea para monitorização;
- dois pontos para injecção/recolha de amostras em látex; e
- um saco de recolha em vinil, estéril, ventilado, com uma capacidade de 700 ml, graduado (em incrementos de 50 ml).

O Sistema de Drenagem Externa II, Conjunto de Tubos e Saco de Recolha (nº de catálogo 82-1721), Figura 2, é composto por componentes externos apenas para efeitos de substituição. Também se inclui um LUER-LOK fêmea com tampa para ser utilizado com cateteres ventriculares de silicone de 1,5 mm D.I.

Os produtos acima referidos são fornecidos esterilizados.

NOTA: Medida do volume do Saco de recolha de ±20 ml, ou seja ±5% do volume real do líquido. Medida do volume da câmara conta-gotas ±1%.

Os seguintes componentes podem ser obtidos em separado para usar com o Sistema de Drenagem Externa II CODMAN:

Número de Catálogo	Descrição
82-1722	Saco de Recolha do Sistema de Drenagem Externa II CODMAN (estéril), embalagem de 5 unidades
82-1723	Clamp de Suporte do Sistema de Drenagem Externa II CODMAN (não-estéril)
82-1704	Linha de Monitorização PIC Descartável CODMAN (estéril)
82-1705	Conjunto do Cateter de Drenagem Externa CODMAN (estéril)
82-1706	Cateter de Drenagem Externa Lombar CODMAN com Agulha de Touhy (estéril)

Contra-indicações

Este dispositivo não é desenhado, não é vendido, nem se destina a outro uso que não o acima indicado.

O uso deste dispositivo é contra-indicado em caso de infecção do couro cabeludo.

Está contra-indicado em doentes a receber anti-coagulantes ou que se saiba terem diáteses hemorrágicas.

Está contra-indicado quando não possa haver observação contínua, 24 horas ao dia, por pessoal treinado.

ATENÇÃO

A pressão intracraniana é controlada pela altura da câmara conta-gotas em relação ao doente. É, portanto, imperativo que nem a câmara conta-gotas, nem o doente sejam acidentalmente baixados ou elevados.

Evite molhar o ventilador estéril da câmara conta-gotas dado que a humidade pode alterar o valor da pressão. Se o ventilador se molhar, substitua imediatamente os tubos e saco de recolha por um 82-1721 ou pelos componentes de um 82-1720.

A altura da câmara conta-gotas ou do paciente só deve ser mudada por pessoal qualificado com ordens do médico.

O movimento do doente depois de posicionar a câmara conta-gotas pode afectar a PIC.

Para minimizar o risco de danos ao cateter, tome cuidado para não retirar o cateter depois da inserção na agulha. Se precisar de tirar o cateter retire a agulha e o cateter simultaneamente.

Aperte com os dedos todas as ligações do LUER-LOK antes de usar o sistema pela primeira vez. As ligações podem ter-se soltado durante o transporte e desempacotamento.

Com a torneira na posição de Apenas Monitorização (Figura 8) o fluido não correrá para o saco

Questions? Contact FDA/CDRH/OCE/DID at CDRH-FOISTATUS@fda.hhs.gov or 301-796-8118

Records processed under FOIA Request 2013-6292; Released 10/17/14

de recolha. A torneira não deve ser deixada nesta posição se a função principal for a de shunt. A torneira deve regressar à posição de Apenas Drenagem (Figura 7).

Monitorização da PIC com a torneira na posição de Monitorização/Drenagem (Figura 9) pode resultar numa leitura de PIC falsa. Monitorização do transdutor e drenagem simultâneas podem resultar em artefacto de forma ondulada e leituras de PIC irrealmente baixas, como descrito por Wilkinson.[5] Monitorização e drenagem da PIC alternadas podem ser feitas ajustando a torneira para a posição de Apenas Drenagem (Figura 7) para a drenagem da PIC, ou para a posição de Apenas Monitorização (Figura 8) para a monitorização da PIC.

Se a torneira tiver sido virada para as posições de Apenas Monitorização ou de OFF (Figura 10) durante a monitorização da PIC ou enquanto se limpa o sistema, deve ser tornado a pôr na posicão de Apenas Drenagem para retomar o shunt.

É preciso cuidado para não levantar nem baixar a câmara conta-gotas quando se calcula o volume de drenagem.

PRECAUÇÕES

Siga as instruções do fabricante quando usar outros componentes que não os da Codman.

Em todas as fases de uso deste produto são necessários cuidados de assépsia.

Deve-se ter extremo cuidado para evitar que o cateter ventricular entre em contacto com dedos sem luvas, toalhas, campos cirúrgicos, talco ou quaisquer superfícies de linho ou granulosas.

A borracha de silicone é altamente electrostática e, como resultado, atrai partículas no ar e contaminantes de superfície que podem causar reacção nos tecidos.

A borracha de silicone oferece fraca resistência a cortes e a desgaste; portanto, use fórceps revestidos a borracha quando manipular o cateter.

Recomenda-se que o cateter seja suturado ao eixo LUER-LOK para evitar rasgar os componentes quando o cateter for manipulado.

Coloque ligaduras com cautela para não cortar ou obstruir os tubos. Não se recomenda o uso de ligaduras de aço inoxidável em produtos de silicone.

Tome cuidado ao retirar e substituir a tampa do LUER-LOK para evitar contaminação.

Para reduzir a incidência de infecção, recomenda-se que os cuidados com a saída do cateter e com a ligação ao dreno externo sejam levados a cabo de acordo com os princípios estabelecidos para os cuidados de cateteres de hiperalimentação de longo prazo.

Recomenda-se que o saco de recolha seja suspenso, e não colocado sobre uma superfície durante o transporte. Se o fluido dentro do saco molhar o ventilador por um período de tempo prolongado pode levar a que o ar fique preso no saco. Isto irá reduzir a capacidade do saco.

Esterilidade

② **Usar só uma vez**

Este produto deve ser usado APENAS UMA VEZ; NÃO REESTERILIZE. Use cuidados de assépsia em todas as fases de manipulação. A Johnson & Johnson Professional não se responsabiliza por nenhum produto que tenha sido reesterilizado, nem será aceite como crédito ou para troca qualquer produto que tenha sido aberto mesmo que não usado.

Desde que a embalagem individual deste produto não tenha sido aberta ou danificado, o produto encontra-se estéril.

Instruções de Utilização

A. Técnica Cirúrgica Geral: Cateter Ventricular

Dado que os locais de inserção do cateter ventricular variam, as decisões respeitantes à técnica de inserção e monitorização da colocação correcta devem ser tomadas caso a caso pelo cirurgião.

1. Assepticamente, prepare e cubra a área da operação.

2. Faça o cateterismo com o estilete no cateter; retire o estilete, verifique o fluxo livre de fluido.

3. Prenda a extremidade distal do cateter à extremidade farpada do trócar. Insira a extremidade aguçada do trócar na incisão usada para o cateterismo e faça uma passagem subcutânea curta. Ver Figura 3.

4. Faça o trócar passar através do couro cabeludo. Com cuidado para não deslocar a porção intraventricular do cateter, faça o cateter passar através da passagem subcutânea até à saliência do elo do cateter já não se notar na incisão. Ver Figura 4. Tape o cateter com fórceps revestidos.

5. Prenda o cateter à pele na saída. Suture o local da incisão. Cubra a área com um penso estéril.

Questions? Contact FDA/CDRH/OCE/DID at CDRH-FOISTATUS@fda.hhs.gov or 301-796-8118

Records processed under FOIA Request 2013-6292; Released 10/17/14

6. Prenda a extremidade distal do cateter à extremidade farpada de um elemento de ligação LUER-LOK com a tampa LUER-LOK. Não retire a tampa LUER-LOK até ligar o cateter à linha do doente do Sistema de Drenagem Externa II CODMAN.

B. Técnica Cirúrgica Geral: Cateter Lombar
Dado que os locais de inserção do cateter lombar variam, as decisões respeitantes à técnica de inserção e verificação da colocação correcta devem ser tomadas caso a caso pelo cirurgião.

1. Assepticamente, prepare e cubra a área da operação.

2. Use anestesia local.

3. Faça uma pequena incisão na região lombar média ao nível da L-1 até à L-3.

4. Com o obturador no lugar, insira a ponta da agulha Touhy de calibre 14 no espaço subaracnóide. Vire o bisel da agulha para cima para colocação cefálica ou para baixo para colocação caudal. Para verificar que o lúmen da agulha Touhy entrou no espaço subaracnóide, retire lentamente o obturador até aparecer LCR. Se não aparecer LCR, reinsira o obturador e reposicione a agulha.

5. Quando a agulha estiver posicionada de maneira precisa e obtiver LCR completamente transparente, retire completamente o obturador e insira a extremidade de abertura fenestrada do cateter através da agulha de Touhy no espaço subaracnóide até ao nível desejado. As marcas no lado do cateter ajudam a medir esta distância. **NOTA:** Para facilitar a colocação, humedeça o cateter numa solução estéril.

ATENÇÃO: Para minimizar o risco de danos ao cateter, tome cuidado para não retirar o cateter depois da inserção na agulha. Se precisar de tirar o cateter, retire a agulha e o cateter simultaneamente.

6. Retire a agulha de Touhy por sobre a extremidade distal do cateter com um movimento para a frente e para trás, mantendo o cateter em posição com fórceps para tecido revestido.

PRECAUÇÃO: O silicone oferece fraca resistência a cortes e desgaste; portanto, use fórceps revestido a borracha quando manipular cateteres de silicone.

7. Apare o cateter junto ao local da incisão.

8. Insira a extremidade farpada do elemento de ligação LUER-LOK (com a tampa ligada) na extremidade distal do cateter e suture os componentes para os juntar.

PRECAUÇÃO: Recomenda-se que o cateter seja suturado ao eixo LUER-LOK para evitar a possível separação dos componentes quando o cateter for retirado.

PRECAUÇÃO: Tenha cuidado ao colocar ligaduras para evitar cortar ou obstruir os tubos. O uso de ligaduras de aço inoxidável em produtos de silicone não é aconselhável.

9. Prenda o elemento de ligação à pele no ponto de saída do cateter, suturando através dos orifícios no rebordo.

10. Cubra a área com um penso estéril. Não retire a tampa LUER-LOK até ligar o cateter à linha do doente do Sistema de Drenagem Externa II CODMAN.

PRECAUÇÃO: Tenha cuidado ao retirar e substituir a tampa do LUER-LOK para evitar contaminação.

C. Instalação de Componentes Externos
1. Prenda o Clamp do Pólo de Drenagem Externa CODMAN, nº de catálogo 82-1723, a um suporte I.V.

2. De maneira segura, monte o Tabuleiro EDS II no clamp de pólo. Nivele o 0 vermelho com a linha do centro da cabeça do doente para drenagem ventricular; e com o local de saída do cateter lombar para drenagem lombar. Certifique de que todos os cinco clamps deslizantes estão abertos.

O fio e o Mecanismo de Fecho CORD-LOC são fornecidos como um método alternativo de colocação. Para maior segurança, ate o fio sobre o Mecanismo de Fecho CORD-LOC depois de o colocar.

ATENÇÃO: A pressão intracraniana é controlada pela altura da câmara conta-gotas em relação ao doente. É, portanto, imperativo que não se baixe nem se levante acidentalmente a câmara conta-gotas nem o doente.

ATENÇÃO: O movimento do doente depois de posicionar a câmara conta-gotas pode afectar a PIC.

ATENÇÃO: Evite molhar o ventilador estéril da câmara conta-gotas dado que a humidade pode alterar o valor da pressão. Se o ventilador se molhar, substitua imediatamente os tubos e o saco de recolha por um 82-1721 ou pelos componentes de um 82-1720.

PRECAUÇÃO: Recomenda-se que o saco de recolha seja suspenso, e não colocado sobre uma

139

116

Questions? Contact FDA/CDRH/OCE/DID at CDRH-FOISTATUS@fda.hhs.gov or 301-796-8118

Records processed under FOIA Request 2013-6292; Released 10/17/14

superfície durante o transporte. Se o fluido dentro do saco molhar o ventilador por um período de tempo prolongado pode levar a que o ar fique preso no saco. Isto irá reduzir a capacidade do saco.

3. Faça deslizar a seta na câmara conta-gotas para regular a pressão em mm HG ou em cm H_2O. Para segurar vire o parafuso preto no sentido dos ponteiros do relógio. NÃO APERTE DEMASIADO O PARAFUSO.

NOTA: A seta de regulação da pressão corresponde à saída de fluido na válvula antirefluxo dentro da câmara conta-gotas. O tubo de admissão por cima da válvula antirefluxo não tem efeito sobre a regulação da pressão porque ambos os lados do tubo se encontram equidistantes do seu "pico" a partir da seta de regulação da pressão. Ver Figura 6.

4. Gire ambas as torneiras para a posição de Apenas Drenagem. Ver Figura 7.

5. As linhas de monitorização da pressão intracraniana (não fornecidas) ligam à torneira do tabuleiro no 0 ou na torneira da linha do doente.

NOTA: O Sistema de Drenagem Externa II CODMAN permite a entrada de ar pelo ventilador estéril da câmara conta-gotas. Isto permite a regulação da PIC pela altura da câmara conta-gotas e evita a possibilidade de sucção ou contra-pressão da linha que corre para baixo ou do saco de recolha afectarem a regulação. É normal a presença de ar no tubo que desce da câmara conta-gotas.

6. Com cuidados de assepsia, limpe o sistema usando uma solução de cloreto de sódio. Faça-a correr para a câmara conta-gotas através do elemento de ligação do LUER-LOK da linha do doente ou através da abertura para monitorização da torneira do doente. Verifique a ausência de fugas e o fluxo para o saco de drenagem.

7. Retire a tampa do LUER-LOK do elemento de ligação do LUER-LOK da extremidade distal do cateter ventricular ou lombar. Ligue o elemento à linha do doente.

D. Utilização de Equipamento de monitorização Da Pressão

Com o equipamento de monitorização da PIC ligado a qualquer uma das aberturas de monitorização, a PIC pode ser verificada com a torneira em qualquer das duas posições conforme se descreve a seguir.

1. A PIC pode ser verificada virando a torneira seleccionada de modo a que o braço do meio aponte para a ligação do cateter, conforme se pode ver na Figura 8. Isto pára o fluxo de fluido para o saco de recolha e para o ponto de injecção. A pressão do fluido irá ser transmitida apenas do cateter para a abertura para monitorização.

ATENÇÃO: Com a torneira na posição de Apenas Monitorização o fluido não drena para o saco de recolha. A torneira não deve ser deixada nesta posição se a função primária for a de shunt. Torne a pôr a torneira na posição de Apenas Drenagem (Figura 7).

2. A PIC também pode ser verificada enquanto se permite que o fluido corra para o saco de recolha. Vire a torneira de maneira que o braço do meio aponte para a abertura para monitorização, conforme se pode ver na Figura 9.

ATENÇÃO: Monitorização da PIC com a torneira na posição Monitorização/Drenagem (Figura 9) pode resultar numa leitura de PIC falsa. Monitorização do transdutor e drenagem simultâneas podem resultar em artefacto de forma ondulada e leituras de PIC irrealmente baixas, como descrito por Wilkinson.[5] Monitorização e drenagem da PIC alternadas podem ser feitas ajustando a torneira para a posição de Apenas Drenagem (Figura 7) para a drenagem da PIC, ou para a posição de Apenas Monitorização (Figura 8) para a monitorização da PIC.

E. Injecção e Recolha de Amostras

1. Com o braço do meio da torneira do doente a apontar para longe da abertura para monitorização (Posição de Apenas Drenagem, Figura 7) feche o clamp deslizante imediatamente distal à torneira. (NOTA: Incluem-se dois clamps deslizantes caso seja usada uma técnica de clamp duplo.)

2. Antes de penetrar o local de injecção, limpe-o assepticamente para evitar uma possível contaminação. (NOTA: Se desejar pode usar uma seringa pequena para retirar o ar preso na linha antes de efectuar a injecção.)

3. Faça a injecção ou recolha a amostra, conforme necessário. (NOTA: A capacidade da linha do doente e do cateter ventricular, do local de injecção à ponta proximal do cateter, é de aproximadamente 1 cc.)

4. Reabra o(s) clamp(s) depois da injecção ou de recolher a amostra para retomar a drenagem.

F. Limpeza do Sistema

Para limpar o sistema desde a torneira ao saco de recolha, vire a torneira do doente para a Posição de Desligado, de modo a que o braço do meio aponte

Questions? Contact FDA/CDRH/OCE/DID at CDRH-FOISTATUS@fda.hhs.gov or 301-796-8118

Records processed under FOIA Request 2013-6292; Released 10/17/14

para o local de injecção (Figura 10). Abra todos os clamps. Injecte o líquido de limpeza no local de injecção.

ATENÇÃO: Quando completar a limpeza, torne a pôr a torneira na Posição de Apenas Drenagem (Figura 7).

G. Substituição do Conjunto de Tubos e Saco de Recolha Do Sistema de Drenagem Externa II CODMAN (nº de catálogo 82-1721)

Respeite as técnicas de assépsia durante a substituição do Conjunto de Tubos e Saco de Recolha.

1. Obstrua o cateter ventricular com fórceps revestidos.

2. Vire qualquer das torneiras para a posição de Desligado (Figura 10).

3. Desligue o LUER-LOK entre o cateter e a linha do doente torcendo na direção oposta à dos ponteiros do relógio. Deite fora os tubos, câmara conta-gotas e saco de recolha usados.

4. Instale o novo conjunto de tubos e saco de recolha.

H. Substituição do Saco de Recolha do Sistema de Drenagem Externa II CODMAN (nº de catálogo 82-1722)

Respeite as técnicas de assépsia durante a substituição do Saco de Recolha. Siga as instruções que acompanham o saco de substituição.

NOTA: Encontra-se ao fundo do Saco de Recolha um ponto de injecção e de recolha de amostras em látex. Para permitir a drenagem do Saco de Recolha, retire este ponto cortando-o abaixo do clampe, usando cuidados de assépsia.

I. Para Determinar a Taxa de Drenagem

1. Meça o fluido no saco ao fim de um período de tempo pré-determinado.

2. Calcule a taxa de drenagem dividindo o volume recolhido pelo tempo que passou.

Método Alternativo

Para determinar a taxa de drenagem quando o volume é pequeno (75 cc ou menos) siga as instruções descritas a seguir.

1. Feche com um clamp o tubo de drenagem 2 cm abaixo da câmara conta-gotas.

2. Depois de um período de tempo pré-determinado, meça a acumulação de fluido na câmara conta-gotas em millitros. Não deixe que a câmara conta-gotas encha completamente, pois poderia molhar e bloquear o ventilador estéril. **NOTA:** A quantidade de fluido na base da câmara conta-gotas e nos 2 cm de tubo fechado com o clamp (0,5 cc) não devem ser incluídos nesta medida.

3. Calcule a taxa de drenagem dividindo o volume recolhido pelo período de tempo.

4. Solte o clamp do tubo abaixo da câmara conta-gotas para continuar a drenagem.

ATENÇÃO: Deve-se ter cuidado para não elevar nem baixar a câmara conta-gotas ao calcular a taxa de drenagem.

Referências

Para consultar as referências, veja o final da secção em inglês.

Garantia

A Johnson & Johnson Professional, Inc, garante que este instrumento médico está isento de defeitos tanto no material como na qualidade do fabrico. ESTA GARANTIA É DADA EM VEZ DE QUAISQUER OUTRAS GARANTIAS EXPLÍCITAS OU IMPLÍCITAS, INCLUINDO QUALQUER GARANTIA DE COMÉRCIO OU DE APTIDÃO PARA DETERMINADA FINALIDADE. A aptidão deste instrumento para qualquer procedimento cirúrgico deve ser determinada por quem o usar. A Johnson & Johnson Professional não será responsável por danos acidentais ou consequenciais de espécie alguma.

® CODMAN é uma marca registada da Johnson & Johnson Professional, Inc.

® LUER-LOK é uma marca registada da Becton, Dickinson, and Co.

® CORD-LOC é uma marca registada da ITW Nexus

161

118

Questions? Contact FDA/CDRH/OCE/DID at CDRH-FOISTATUS@fda.hhs.gov or 301-796-8118

Records processed under FOIA Request 2013-6292; Released 10/17/14

[redacted]

重要情報

使用前にお読み下さい。

CODMAN®
エクスターナル　ドレナージ システムII

CODMAN
エクスターナル　ドレナージ システムIIチューブ付き 排液バッグ

承認番号 (48 輸) 第 0826 号
コッドマン　エクスターナル　ドレナージシステムII

滅菌済　ー　EO 滅菌

適応

CODMAN エクスターナル ドレナージシステムIIは脳脊髄液(CSF)や他の病変の液体を排出することにより増大した頭蓋内の容量や圧の減少および制御を行うことを目的とし、内シャントの永続的留置が不適当と認められた場合に適応されます。[1-4]

製品概要

エクスターナル ドレナージシステム II (カタログ番号 82-1720) には、下記の製品が含まれています。(図 1 参照)

- 35 cm X 線不通過シリコン留置カテーテル (内径 1.5 mm、外径 3.1 mm)、
- カテーテル留置用 36 cm ステンレス スチール スタイレット、
- ステンレス スチール カテーテル皮下通過用 トロカール、
- カテーテル接続接続用鼓型 LUER-LOK® および LUER-LOK キャップ、
- 24" 二重巻り縫合糸付き CORD-LOC® ロッキング メカニズム、
- 頭蓋内圧 (ICP) 制御用 27 cm 測定バックボード (熱成形トレー内に収容)、水銀柱圧換算表示及び外固定の取扱い説明付き。
- 逆流防止弁、無菌通気孔付き 75 ml ドリップ チャンバー、
- スライドクランプ 2 個付き 157 cm ビニール チューブ、
- 四方活栓 2 個、1 個等にモニター用鼓型 LUER-LOK ロックポートを装着、
- ラテックス注入及び排液採取、
- 滅菌通気孔付き 700 ml ビニール排液バッグ (50 ml 単位の目盛り付き)。

エクスターナル ドレナージシステムIIチューブ付き排液バッグ (カタログ番号 82-1721) は取替え用の体外回路セットです。図2参照。カテーテル接続用キャップ付きLUER-LOKは、内径 1.5 mm のシリコン留置カテーテルに接続可能です。

上記の製品は全て滅菌済です。

注意：排液バッグの目盛りによる排液量は実測値の ±20 ml または ±5%の差が生じます。ドリップチャンバーの目盛りによる排液量は同 ±1%の差が生じます。

CODMAN エクスターナル　ドレナージシステムIIと共にお使い頂くため、次の別売品をご用意致しております。

カタログ番号	商品名
82-1722	CODMAN エクスターナル ドレナージシステムII排液バッグ (滅菌済)、5 個入り。
82-1723	CODMAN エクスターナル　ドレナージシステムII ボールクランプ (未滅菌)。
82-1704	CODMAN ICP モニター用使い捨てチューブ (滅菌済)。
82-1705	CODMAN エクスターナル ドレナージ カテーテル　セット (滅菌済)。
82-1706	CODMAN 腰椎エクスターナル ドレナージ カテーテル、Touhy 針付き (滅菌済)。

禁忌

適応以外の使用

頭皮感染がある場合の使用

抗凝固剤の投与患者または易出血性患者への使用

有資格者による 24 時間管理が出来ない場合の使用

警告

頭蓋内圧は各患者に応じて設定されるドリップチャンバーの高さで調節されます。従って、ドリップチャンバーおよび患者の高さを不用意に変えることがないように万全の注意を払って下さい。

ドリップチャンバーの滅菌通気孔が濡れると圧設定が変わる場合がありますので、濡らさないようにして下さい。通気孔が濡れを帯びた場合には、ただちにチューブ及び排液バッグを 82-1721 もしくは 82-1720 の構成部品と交換して下さい。

ドリップチャンバーや患者の高さを変える場合は、必ず医師の指示をうけた有資格者が行うようにして下さい。

ドリップチャンバー位置設定後の患者の移動は頭蓋内圧に影響を及ぼす恐れがあります。

カテーテル損傷の危険を最小に抑えるため、カテーテルを一旦 Touhy 針内に挿入したら、これを抜き取らないようにご注意下さい。カテーテルを抜き取る必要がある場合には、針とカテーテルとを一緒に抜いて下さい。

システム使用前に LUER-LOK の全ての接合部を指で締め直して下さい。出荷あるいは荷扱い過程で接合部が緩んでいる可能性があります。

活栓をモニタリングのままにしておくと (図8)、排液は排液バッグに流れません。ドレナージが主目的の場合には、活栓をこの位置にしておかずに、必ずドレナージに戻して下さい (図 7)。

162

19

Questions? Contact FDA/CDRH/OCE/DID at CDRH-FOISTATUS@fda.hhs.gov or 301-796-8118

Records processed under FOIA Request 2013-6292; Released 10/17/14

[redacted]

活栓をモニタリング／ドレナージ（図9）にしたままICPのモニタリングを行うとICPの測定値が狂うことがあります。また、ウィルキンソンにより報告されているように、ドレナージとトランスデューサーの同時モニタリングも不自然な波形や異常に低い ICP の測定値を生じることがあります。活栓をドレナージ（図7）、あるいはモニタリング（図8）に設定して ICP のドレナージとモニタリングを交互に行ってください。

ICPのモニタリングあるいはシステムの薬液注入を行うため活栓をモニタリングや OFF（図10）にした後、ドレナージを再開する前には必ず活栓をドレナージに戻して下さい。

ドレナージ率計測の際、ドリップチャンバーの高さを変えないようにご注意下さい。

使用前の注意

Johnson & Johnson Professional 以外の部品を使用する場合は、そのメーカーの使用説明書に従って下さい。

この製品の取り扱いは全て無菌操作を用いて下さい。

脳室カテーテルが、素手、タオル、ドレープ、タルクあるいは繊維等に接触しないよう十分注意して下さい。

シリコンゴムは静電気が起こり易いため、空中の粒子を引き付けて表面を汚染し、結膜反応の原因となる場合があります。

シリコンゴムは切れやすく、破れやすいので、カテーテル取扱の際は先端にゴムのキャップをつけたピンセットを使用して下さい。

カテーテルを抜き取る際カテーテルと LUER-LOK ハブとが離脱しないように、双方を結紮して下さい。

結紮の際はチューブを切ったり、閉鎖したりしないようにご注意下さい。シリコン製品にはステンレス スチール結紮糸を使用しないで下さい。

LUER-LOKキャップを外して取り替える場合、汚染の防止にご留意下さい。

カテーテルの排出部およびエクスターナル　ドレナージとの連結部の取扱には、感染防止のため、長期高カロリー療法カテーテル設置の方法に従って下さい。

排液バッグを移動する際、横にせず、吊した状態にしておいて下さい。バッグ内の排液で通気孔が長時間濡れるままにしておくと、空気の侵入によりバッグの容量が減ることがあります。

滅菌性

本器具は一回限り使用するものですから、再滅菌をしないで下さい。本製品の取り扱いには全て無菌操作を用いてください。Johnson & Johnson Professional では、この器具が再滅菌された場合の責任は負いかねます。また包装の開封後器具を使わなかった場合の返品または交換請求には応じかねます。

本製品の各包装状態が開封もしくは破損していない限り滅菌状態が保たれます。

使用方法

A. 一般手術手技：脳室カテーテル

脳室カテーテルの挿入部位は一様ではありませんので、手技および術前の検査により医師が各症例ごとに決定して下さい。

1. 無菌的に手術部位の前処置を行い、無菌布で覆います。

2. スタイレットをカテーテル内に入れて、カテーテル挿入を実施します。スタイレットを抜き取って、液がスムースに流出するのを確認して下さい。

3. カテーテル後端をトロカールの突起を持つ末端に取り付けます。トロカール反対側の鋭った末端をカテーテル挿入部位の切開部に挿入し、短い皮下トンネルをつくり、カテーテルを皮下留置します。（図3参照）

4. トロカールを頭皮から突出させます。カテーテルが脳室から外れぬように注意しながら、カテーテルのループが切開部内に収まるまで皮下トンネルからカテーテルを引き出します（図4参照）。カテーテルを先端にゴムキャップを付けたピンセットで閉鎖します。

5. カテーテルを出口部の皮膚に固定します。切開部を縫合し無菌ドレッシングで覆います。

6. LUER-LOKキャップが付いた雌型LUER-LOKコネクターの突起を持つ末端に、カテーテル後端を固定します。CODMAN エクスターナル ドレナージ システム II の滅菌チューブにカテーテルを取り付ける準備をした後、LUER-LOK キャップを外します。

B. 一般手術手技：腰椎カテーテル

腰椎カテーテルの挿入部位は一様ではありませんので、手技および術前の検査により医師が各症例毎に決定して下さい。

1. 無菌的に手術部位の前処置を行い、無菌布で覆います。

2. 局所麻酔を実施します。

3. L-1 から L-3 の腰椎中央に小切開を行います。

4. スタイレットを挿入した14ゲージの Touhy 針をくも膜下腔に穿刺します。カテーテルを上部に留置する場合は針の刃面(斜めの部分)を上向きにします。下部に留置する場合は刃面を下向きにします。スタイレットを CSF が流出し始めるまで静かに抜き取って行き、Touhy 針の管腔がくも膜下腔に入っていることを確認します。CSFが流出しない場合には、スタイレットを挿入し直し、再穿刺して下さい。

5. 針が正しく穿刺され、透明な CSF が流出してきたら、スタイレットを完全に抜き去り、Touhy 針を外とう管としてカテーテルの開口部をもつ末端をくも膜下腔より目的部位に挿入します。カテーテル側面のマークによって挿入距離の目途をつけることが出来ます。注：滅菌溶液でカテーテルを洗うと留置が容易になります。

注意：カテーテル損傷の危険を最小に抑えるため、カテーテルを一旦針内に挿入したら、これを抜き取らないようにご注意下さい。カテーテルを抜き取る必要がある場合には、針とカテーテルとを一緒に抜いて下さい。

6. 先端にゴムのキャップを付けたピンセットでカテーテルを正しい位置に保持しながら、Touhy 針を前後に動かしてカテーテル後端から抜き取ります。

遵守事項：シリコンは切れやすく、破れやすいので、シリコンカテーテル取扱の際は先端にゴムのキャップをつけたピンセットを使用して下さい。

7. カテーテルは切開部近くで切り取ります。

8. LUER-LOK コネクターの突起を持つ末端（LUER-LOK キャップ付き)をカテーテル後端に挿入の上、双方を結紮します。

遵守事項：カテーテルを抜き取る際カテーテルとLUER-LOK ハブとが離脱しないように、双方を結紮して下さい。

163

Questions? Contact FDA/CDRH/OCE/DID at CDRH-FOISTATUS@fda.hhs.gov or 301-796-8118

Records processed under FOIA Request 2013-6292; Released 10/17/14

遵守事項：結紮の際はチューブを切ったり、閉鎖したりしないようにご注意下さい。シリコン製品にはステンレス スチール結紮糸を使用しないで下さい。

9. フランジの孔に縫合糸を通し、コネクターとカテーテル出口部の皮膚とを縫合固定します。

10. 部位を無菌ドレッシングで覆います。CODMANエクスターナル ドレナージシステムⅡの患者側チューブにカテーテルを取り付ける準備をした後、LUER-LOKキャップを外します。

遵守事項：LUER-LOKキャップを外して取り替える場合、汚染の防止にご留意下さい。

C. 外部回路の取り付け

1. CODMANエクスターナル ドレナージ ポールクランプ（カタログ番号82-1723）をI.V.ポールに固定して下さい。

2. EDSⅡトレーをポールクランプにしっかりと固定します。赤の目盛り0を、脳室ドレナージを行う患者の場合では頭の中線に、腰椎ドレナージの場合では腰椎カテーテル出口部に合わせます。必ず5個のスライドクランプすべてを開放して下さい。

もう1つの取り付け方法として、縫合糸付きCORD-LOCロッキングメカニズムがあります。この場合留置した後、CORD-LOCロッキングメカニズムの上で縫合糸を結ぶと安全性が更に高くなります。

注意：頭蓋内圧は各患者に応じて設定されるドリップチャンバーの高さで調節されます。ドリップチャンバーおよび患者の高さを不用意に変えることがないように万全の注意を払って下さい。

注意：ドリップチャンバー位置設定後の患者の移動は、頭蓋内圧に影響を及ぼす恐れがあります。

注意：ドリップチャンバーの無菌通気孔が濡れると圧設定が変わる場合がありますので、これを濡らさないようにして下さい。通気孔が濡れたと思われる場合には、直ちにチューブと排液バッグを交換して下さい。

遵守事項：排液バッグを移動する際、横にせず、吊した状態にしておいて下さい。バッグ内の排液で通気孔が長時間濡れるままにしておくと、空気の侵入により、バッグの容量が減ることがあります。

3. ドリップチャンバー矢印を圧設定しようとするmm Hgまたはmm H_2Oの目盛りに合わせて下さい。黒いネジを時計方向に回して固定します。ネジを締めすぎないで下さい。

注：圧設定用の矢印は、ドリップチャンバー内の逆流防止弁の流出口の高さに一致しています。逆流防止弁より高い位置にある流入チューブが圧設定に影響することはありません。これはチューブの両側ともに、圧設定矢印からチューブ最上部までの距離が相等しいからです。（図6参照）

4. 2つの活栓を回して、どちらもドレナージに合わせます。（図7参照）

5. 頭蓋内圧測定用のライン（吐出せず）は、目盛り0のトレー内活栓か、患者側チューブの活栓に接続します。

注：CODMANエクスターナル ドレナージシステムⅡはドリップチャンバーの減圧通気孔より空気が侵入出来るように設計されています。この設計のためチャンバーの高さによる頭蓋内圧の設定が可能になり、また設定圧がチューブ下流や排液バッグの吸引、陰圧から影響を受けるのを防止出来ます。ドリップチャンバーから下流のチューブ内に空気が入ることは正常です。

6. 無菌操作により、滅菌生理食塩水をシステムに注入します。注入は患者側チューブのLUER-LOKコネクターまたは患者側活栓のモニタリングポートからドリップチャンバーに注入するようにして下さい。漏れていないこと、液がスムースに排液バッグに流れていることを確認して下さい。

7. 脳室カテーテルあるいは腰椎カテーテルの後端の雌型LUER-LOKコネクターからLUER-LOKキャップを外して、コネクターを患者側チューブにつないで下さい。

D. 圧モニター装置の使用方法

どちらかのモニタリングポートに頭蓋内圧測定装置を接続すると、下記のように2つの位置のうちどちらの活栓でもICPを測定できるようになります。

1. 図8に示すように、活栓を回して中央のハンドルをカテーテル接続部方向に向けることにより ICP 測定が可能になります。この場合液は排液バッグと薬液注入部に流れないで、液圧がカテーテルからモニタリングポートに移行するだけです。

警告：活栓をモニタリングのままにしておくと、排液は排液バッグに流れません。ドレナージが主目的の場合には、活栓をこの位置にしておかず、必ずドレナージに戻して下さい（図7）。

2. 図9に示すように、活栓の中央ハンドルをモニタリングポート方向に向けることによって、液を排液バッグに流しながらICPを測定することも出来ます。

警告：活栓をモニタリング／ドレナージ（図9）にしたままICPのモニタリングを行うとICPの測定値が狂うことがあります。また、ウィルキンソンにより指摘されているように、ドレナージとトランスデューサーの同時モニタリングも不自然な波形や異常に低いICPの測定値を生じることがあります。活栓をドレナージ（図7）、あるいはモニタイング（図8）に設定してICPのドレナージとモニタリングを交互に行ってください。

E. 薬液注入とサンプリング

1. 患者側活栓の中央ハンドルをモニタリングポートと反対側に向けておいて（ドレナージの位置、図7）、活栓の遠く反対側のスライドクランプを締めます。（注：このセット中には、ダブルクランプ術式用に備えてスライドクランプ2個が含まれております。）

2. 注入部に接続する前に、注入部の滅菌処置をして感染を防ぎます。（注：必要に応じ、注入前に小さなシリンジを用いてチューブ内のエアー抜きをすることも出来ます。）

3. 薬液注入またはサンプリングを実施します。（注：注入部位からカテーテルの最先端までの患者側チューブと脳室カテーテルの容量は約1 ccです。）

4. 薬液注入あるいはサンプリングが終了したら、クランプを開けてドレナージを再開します。

F. 灌注方法

活栓から排液バッグまでこのシステムの灌注を行うには、先ず患者側活栓の中央ハンドルを注入部位方向に向けて活栓をOFFにします（図10）。全てのクランプを開放した後、灌注メデアムを注入部から注入します。

注意：灌注が完了したら活栓を"ドレナージ"に戻して下さい（図7）。

164

Questions? Contact FDA/CDRH/OCE/DID at CDRH-FOISTATUS@fda.hhs.gov or 301-796-8118

Records processed under FOIA Request 2013-6292; Released 10/17/14

G. CODMAN エクスターナル ドレナージシステム II チュービングセット付き排液バッグ（カタログ番号82-1721）の交換

チュービングセット付き排液バッグの交換中は無菌操作を遵守して下さい。

1. 先端にゴムキャップを付けたピンセットで監視カテーテルを閉鎖します。

2. どちらかの活栓を OFF にします（図 10）。

3. カテーテルと患者側チューブの間の LUER-LOK を反時計方向に回して外します。古いチューブ、ドリップチャンバー、それに排液バッグを廃棄します。

4. 新しいチュービングセット付き排液バッグをつないで下さい。

H. CODMAN エクスターナル ドレナージシステム II 排液バッグの交換（カタログ番号 82-1722）

排液バッグの交換中は無菌操作を遵守して下さい。交換用バッグに添付の取扱説明書をご覧下さい。

注：ラテックス注入／サンプリング部は排液バッグの底部にあります。無菌操作によってクランプ下部を切断してこの部位を取り除いて、排液バッグから排出して下さい。

I. ドレナージ率の算定

1. 所定時間経過後バッグ内の液量を計測します。

2. 採集液量を経過時間で割ってドレナージ率を算出します。

他の算定方法

ドレナージ量が小量である場合（75 cc以下）、次に述べる算定方法によってドレナージ率を算出します。

1. ドリップチャンバーの下2 cmでドレナージチューブをクランプで閉鎖します。

2. 所定時間経過後、ドリップチャンバー内の液量を ml 単位で計測します。ドリップチャンバーを一杯に満たすと、無菌通気孔が濡れて詰まる恐れがあるのでご注意下さい。注：ドリップチャンバー基部と閉鎖した2 cmのチューブの液量（0.5 cc）は計算から除外して下さい。

3. 採集液量を経過時間で割ってドレナージ率を算出します。

4. ドリップチャンバー下のチューブを開放して、ドレナージを続けます。

注意：ドレナージ率算定の間、ドリップチャンバーの高さが変わらないようにしてください。

参考文献

参考文献に関しては、英文の最後の部分を参照して下さい。

保証

Johnson & Johnson Professional, Inc. は、本製品が材料及び製作工程において欠陥のないことを保証します。上記の保証は、市場性や使用適合性の保証を含む他のあらゆる暗示また含意された保証の代わりとなるものです。あらゆる外科術に対する医用機器の適応性については、ユーザー側に委ねられるものとします。Johnson & Johnson Professional は偶発的または間接的な如何なる損傷に対しても責任を負いません。

● CODMAN は Johnson & Johnson Professional, Inc. の登録商標です。

● LUER-LOK は Becton, Dickinson, and Co. の登録商標です。

● CORD-LOC は ITW Nexus の登録商標です。

輸入・発売元

ジョンソン・エンド・ジョンソン　メディカル株式会社

本社／〒135 東京都江東区東雲6丁目3番2号
イースト21タワー

TEL 03(5632)7188 FAX 03(5632)7189

101

102

Questions? Contact FDA/CDRH/OCE/DID at CDRH-FOISTATUS@fda.hhs.gov or 301-796-8118

Records processed under FOIA Request 2013-6292; Released 10/17/14

Questions? Contact FDA/CDRH/OCE/DID at CDRH-FOISTATUS@fda.hhs.gov or 301-796-8118

Records processed under FOIA Request 2013-6292; Released 10/17/14

ATTACHMENT 3

Product/Process Qualification Test Reports

Medtronic PS Medical considers the information contained in this section to be confidential. Medtronic PS Medical therefore requests that all material and information contained in this section be held confidential and not available under the Freedom of Information Act.

162 pg

Questions? Contact FDA/CDRH/OCE/DID at CDRH-FOISTATUS@fda.hhs.gov or 301-796-8118

Records processed under FOIA Request 2013-6292; Released 10/17/14

Test Report Summary

Title/Number	Objective	Specifications	Conclusions
(b)(4) [redacted]			

Questions? Contact FDA/CDRH/OCE/DID at CDRH-FOISTATUS@fda.hhs.gov or 301-796-8118

Records processed under FOIA Request 2013-6292; Released 10/17/14

ATTACHMENT 4

Device Specifications

Medtronic PS Medical considers the information contained in this section to be confidential. Medtronic PS Medical therefore requests that all material and information contained in this section be held confidential and not available under the Freedom of Information Act.

Questions? Contact FDA/CDRH/OCE/DID at CDRH-FOISTATUS@fda.hhs.gov or 301-796-8118

(b)(4) specifications

(b)(4) specifications

(b)(4) specifications

(b)(4) specifications

(b)(4) specifications

(b)(4) specifications

(b)(4) specifications

(b)(4) specifications

(b)(4) specifications

(b)(4) specifications

(b)(4) specifications

(b)(4) specifications

(b)(4) specifications

(b)(4) specifications

(b)(4) specifications

(b)(4) specifications

(b)(4) specifications

(b)(4) specifications

(b)(4) specifications

(b)(4) specifications

(b)(4) specifications

(b)(4) specifications

(b)(4) specifications

(b)(4) specifications

(b)(4) specifications

(b)(4) specifications

(b)(4) specifications

(b)(4) specifications

(b)(4) specifications

(b)(4) specifications

(b)(4) specifications