K971148

JUL 17 1997

ACS Centaur

Summary of Safety and Effectiveness

As required by 21 CFR 807.92, the following 510(k) Summary is provided:

1. Submitters Information

Contact person: William J. Pignato
Director of Regulatory Affairs

Address: Chiron Diagnostics Corporation
63 North Street
Medfield, MA 02052

Phone: 508 359-3825

Date Summary Prepared: April 14, 1997

2. Device Information

Proprietary Name: ACS:Centaur Analyzer
Common Name: Automated Immunoassay Analyzer
Classification Name: Photometric Analyzer for Clinical Use
Classification Number: 21 CFR 862.2160, Class I

3. Predicate Device Information

Name: ACS:180® Analyzer
Manufacturer: Chiron Diagnostics Corporation (formally Ciba Corning Diagnostics Corp.)
510(k) Number: D.C. #K902336.

4. Device Description

The ACS:Centaur system is a stand-alone, continuous operation, immunochemistry analyzer. The system performs the following functions.

- aspirates and dispenses samples
- performs dilutions
- adds reagents
- incubates reaction vessels
- separates solid and liquid waste
- measures photon emissions
- performs data reduction
- collects and maintains patient demographics and results

5. Statement of Intended Use

The intended use of the ACS:Centaur system is an automated immunoassay analyzer designed to perform in vitro diagnostic immunochemical assays analysis on clinical specimens using the ACS ilmmunoassays. The system menu will include endocrine, anemia, reproductive, cardiac, therapeutic drug, and infectious disease assays. All assays are based on chemiluminescent technology.

6. Summary of Technological Characteristics

ACS assays are dedicated for use on the ACS:180® and the ACS:Centaur utilizes acridinium ester as label and paramagnetic particles as the solid phase. Like the ACS:180®, the ACS:Centaur measures the amount of light emitted during the chemiluminescent reaction. There is direct relationship between the amount of light emitted and amount of antigen in the patient sample. The system will measure both competitive binding assays and sandwich assays.

The ACS:Centaur system uses a Master Curve and a two-point, user-initiated calibration to calibrate all the ACS assays. The Master Curve and the two-point calibration system eliminate the need to measure a full standard curve with each assay or to run calibrators each time the assay is run. The system stores the calibration for the interval specified in the assay product inserts.

Other Technological Features include:

- Photomultiplier used in the photon counting mode
- Automated pipetting of sample and reagents
- Electronic Fluid Sensing on sample and reagents
- Clog detection for samples
- Random access and batch test processing
- Varied test incubations
- Human Interface features including barcode reading, LIS, automated data reduction.
- Automated dilution capabilities

DEPARTMENT OF HEALTH & HUMAN SERVICES

Public Health Service

Food and Drug Administration
2098 Gaither Road
Rockville MD 20850

JUL 17 1997

Thomas F. Flynn
Manager, Regulatory Affairs & Compliance
Chiron Diagnostics Corporation
63 North Street
Medfield, Massachusetts 02052-1688

Re: K971418
ACS Centaur Analyzer
Regulatory Class: I
Product Code: JJE
Dated: June 26, 1997
Received: June 27, 1997

Dear Mr. Flynn:

We have reviewed your Section 510(k) notification of intent to market the device referenced above and we have determined the device is substantially equivalent (for the indications for use stated in the enclosure) to devices marketed in interstate commerce prior to May 28, 1976, the enactment date of the Medical Device Amendments or to devices that have been reclassified in accordance with the provisions of the Federal Food, Drug, and Cosmetic Act (Act). You may, therefore, market the device, subject to the general controls provisions of the Act. The general controls provisions of the Act include requirements for annual registration, listing of devices, good manufacturing practice, labeling, and prohibitions against misbranding and adulteration.

If your device is classified (see above) into either class II (Special Controls) or class III (Premarket Approval), it may be subject to such additional controls. Existing major regulations affecting your device can be found in the Code of Federal Regulations, Title 21, Parts 800 to 895. A substantially equivalent determination assumes compliance with the current Good Manufacturing Practice requirement, as set forth in the Quality System Regulation (QS) for Medical Devices: General regulation (21 CFR Part 820) and that, through periodic (QS) inspections, the Food and Drug Administration (FDA) will verify such assumptions. Failure to comply with the GMP regulation may result in regulatory action. In addition, FDA may publish further announcements concerning your device in the Federal Register. Please note: this response to your premarket notification submission does not affect any obligation you might have under sections 531 through 542 of the Act for devices under the Electronic Product Radiation Control provisions, or other Federal Laws or Regulations.

Under the Clinical Laboratory Improvement Amendments of 1988 (CLIA-88), this device may require a CLIA complexity categorization. To determine if it does, you should contact the Centers for Disease Control and Prevention (CDC) at (770) 488-7655.

This letter will allow you to begin marketing your device as described in your 510(k) premarket notification. The FDA finding of substantial equivalence of your device to a legally marketed predicate device results in a classification for your device and thus, permits your device to proceed to the market.

If you desire specific advice for your device on our labeling regulation (21 CFR Part 801 and additionally 809.10 for in vitro diagnostic devices), please contact the Office of Compliance at (301) 594-4588. Additionally, for questions on the promotion and advertising of your device, please contact the Office of Compliance at (301) 594-4639. Also, please note the regulation entitled, "Misbranding by reference to premarket notification" (21 CFR 807.97). Other general information on your responsibilities under the Act may be obtained from the Division of Small Manufacturers Assistance at its toll-free number (800) 638-2041 or (301) 443-6597 or at its internet address "http://www.fda.gov/cdrh/dsmamain.html".

Sincerely yours,

Steven Gutman

Steven I. Gutman, M.D., M.B.A.
Director
Division of Clinical
Laboratory Devices
Office of Device Evaluation
Center for Devices and
Radiological Health

Enclosure

510(k) Number (if known): _____

Device Name: **Chiron Diagnostics ACS:Centaur System**

Indications for Use:

The intended use of the ACS:Centaur system is an automated immunoassay analyzer designed to perform in vitro diagnostic immunochemical assays analysis on clinical specimens using the ACS ilmmunoassays. The system menu will include endocrine, anemia, reproductive, cardiac, therapeutic drug, and infectious disease assays. All assays are based on chemiluminescent technology.proteins and is an indirect indicator of thyroid status.[4]

(Division Sign-Off)
Division of Clinical Laboratory Devices
510(k) Number K97-118

(PLEASE DO NOT WRITE BELOW THIS LINE--CONTINUE ON ANOTHER PAGE, IF NEEDED)

Concurrence of CDRH, Office of Device Evaluation (ODE)

Prescription Use ✓
(Per 21 CFR 801.109)

OR

Over-The-Counter Use _____
(Optional Format 1-2-96)

DEPARTMENT OF HEALTH & HUMAN SERVICES

Public Health Service
Food and Drug Administration

Memorandum

Date: 5/8/07

From: DMC (HFZ-401)

Subject: Premarket Notification Number(s): K971418/A3

To: Division Director: CH/DCLD

The attached information has been received by the 510(k) DMC on the above referenced 510(k) submission(s). Since a final decision has been rendered, this record is officially closed.

Please review the attached document and return it to the DMC, with one of the statements checked below.

_____Information does not change the status of the 510(k); no other action required by the DMC; please add to image file. (Prepare K-25) THIS DOES NOT APPLY TO TRANSFER OF OWNERSHIP. PLEASE BRING ANY TRANSFER OF OWNERSHIP TO POS.

_____Additional information requires a new 510(k); however, the information submitted is incomplete; (Noitify company to submit a new 510(k);[Prepare the K30 Letter on the LAN]

_____Additional information requires a new 510(k); please process [This information will be made into a new 510(k)

✓ No response necessary (e.g., hard copy of fax for the truthful and accuracy statement, 510(k) statement). Duplicate of K955873

CLIA CATEGORIZATION refers to laboratory test system devices reviewed by the Division of Clinical Laboratory Devices (HFZ-440

_____Information requires a **CLIA CATEGORIZATION**; the complexity may remain the same as the original 510(k) or may change as a result of the additional information (Prepare a CAT letter)

____Additional information requires a **CLIA CATEGORIZATION**; however, the information submitted is incomplete; (call or fax firm)

✓ No response necessary

This information should be returned to the DMC within 10 working days from the date of this memorandum.

Reviewed by: Carol Benson

Date: 5-25-01

Draft #2 : 9/8/99
Draft #3: 1/3/00

DMC

1

Bayer

Business Group
Diagnostics

Bayer Corporation
511 Benedict Avenue
Tarrytown, NY 10591-5097
Phone: 914-631-8000
Fax: 914 524-2132
http://www.bayerdiag.com

May 2, 2001

U.S. Food and Drug Administration
Center for Devices and Radiological Health
Document Mail Center (HFZ-401)
9200 Corporate Blvd.
Rockville, MD 20850

Re: Bayer Diagnostics ACS:180/ADVIA Centaur Systems and Immunoassays *Data for Commercialization of Original Equipment Manufacturer, Secondary and Generic Reagents for Automated Analyzers*

Bayer Diagnostics (formally Chiron Diagnostics) is submitting the required information in accordance with the FDA Guidance: "*Data for Commercialization of Original Equipment Manufacturer, Secondary and Generic Reagents for Automated Analyzers.*" Bayer intends to use the same assay currently cleared by FDA on its ACS:180 analyzers for use on its ADVIA Centaur analyzer. A chart of the comparison of features for the ADVIA Centaur vs. ACS:180 is enclosed.

The list of reagents currently approved for use on the ACS:180 and intended for use on the ADVIA Centaur are the following immunoassays:

- ACS Phenytoin This assay has been cleared for use on ACS 180 system (reference K955873)

- ACS:180 System K902336 / K940810
- ADVIA Centaur System K971418

There are no changes in the design of the assays currently used on the ACS:180 intended for the ADVIA Centaur. The assay architectures and formulation are identical for both assays. (b)(4) [redacted] (b)(4) The two formats continue to maintain the following for assay and analyzers:

Assay:
- Same critical raw materials.
- Same concentration of critical materials in the reagents.

5K33

- Same buffer formulation.

Assay on instruments:

- Same sample volume.
- Same reagent dispense volume.
- Same incubation temperature and time.
- Same calibration and reference standards.

Additionally, the placement of these reagents on the ADVIA Centaur have been reviewed in accordance with the guidance *"Deciding When to submit a 510(k) for a Change to an Existing Device."* The review determined that there were no changes of significance requiring anew 510(k).

Testing of assays on the ADVIA Centaur was conducted in accordance with the enclosed Performance Study Protocol, dated January 31, 1995, submitted on September 19, 1996, and subsequently accepted for the file by FDA. In conducting the reagent performance studies, some non-significant changes were made in the protocol having no impact on the quality of the review. These included:

(b) (4)

[redacted]

If there are any questions, please contact me.

Sincerely,

Kenneth T. Edds, Ph.D.
Regulatory Affairs Manager
Bayer Diagnostics
914-524-2446
914-524-2500 (fax)
ken.edds.b@bayer.com

Instrument Comparison
ACS:Centaur and ACS:180

Feature	ACS:180	ACS:Centaur
Principle of Operation	• Chemiluminescence using magnetic-particle solid phase and chemiluminescent label	• same
Optical System	• PMT used in photon counting mode	• same
Temperature Control	• Reactions are controlled at 37°C	*Reactions* • Reactions controlled at 37°C *Reagent Storage* • On-board refrigeration

Dispense System	*Sample & Reagent Probes*
	• Automated pipetting of samples and reagents
	• Precision syringes (sample and reagent)
	• Fluid sensing on sample and reagent probes
	• Clog detection mechanism to alert operator to clogged sample probe
		• *Sample Probe* - same, plus
		  • disposable probe tips
		• *Reagent Probes* - same, plus
		  • fluid monitoring during aspiration

Sample and Reagent Handling	*Sample Handling* • Sample carousel with 34 outer positions and 26 inner positions • Sample tray inserts for other size sample tubes *Reagent Handling* • Reagent carousel with 26 positions (13 pairs in usual configuration)	*Sample Handling* • Sample tubes, 5 tubes per rack up to 180 samples *Reagent Handling* • Assay Reagents: Reagent compartment with 30 positions • Ancillary Reagents: Reagent compartment with 15 positions
Test Processing	• Random Access and Batch	• same

Assay Protocols	• approximately 8 minutes	• same, plus
		  • 18 minute incubation, single step
		  • 8-18 minute incubation, two step
		  • 18-18 minute incubation, two step

Human Interface / Data Output	• 9" CRT
	• External printers
	• Serial bi-directional LIS Interface
	• Audible (adjustable) beeper
	• Computer LIS Interface
		• same, plus
		  • 17" Color Monitor with Graphical User Interface
		  • External Modem for Remote Diagnostics Interface

Human Interface / Data Input	• 101 key keyboard • Hand-held barcode reader • Stationary barcode scanners for id of patient samples and reagents • Computer LIS Interface	• same
Human Interface / Data Analysis	• Automated data reduction • Assay-specific data reduction	• same

Feature	ACS:180	ACS:Centaur
QC Software	• Stored control results • L-J plotting • Statistical enhancements • Compatibility with CCD QC Reporting	• same
Specimens	• Serum or plasma, sample cups or primary tubes may be used • Dilutions allowed on a per-assay basis • Capability of Dilution of Samples Requiring Pretreatment	• same
Reagents	• Reagent volume reporting • Reagent inventory tracks bottle usage	• same
Calibrators	• 6 to 10 point stored calibration for each reagent • 2 point user run calibration • Calibrators checked with barcode • Calibrator lot numbers stored and displayed	• same
Controls	• Low, mid, and high constituent controls • Capability to dilute controls	• same
Physical	• Bench Model; 23Hx23Dx58L • 250lbs • <1200watts • Ambient temp 18-30C	• Floor Model; 60Hx42Dx58L • 1200 lbs. • <2000 watts • Ambient temp 18-30C
Other User Interface Features	• Stat interrupt capability • Improved cleaning with Extended Operation Module • Improved User Interface for scheduling batch runs, report options, easy-to-use maintenance • Complete reporting of system status and logging of system events • Tracking on-board reagent usage • Support for foreign languages • Barcode extended to 128, 2 of 5 • On-Line Information System • System test extended to include slope and offset, dilution and overrange condition •	• same
Other Performance Features	• Throughput: 180 tests/hr • Time to First Result: 15 minutes • On-board supplies for 200 tests	• Throughput: 240 tests/hr • Time to First Result: 15 min, 30 min, or 60 min depending upon assay protocol • On-board supplies for 1000 tests

(b)(4) Performance Study Protocol

(b)(4) Performance Study Protocol

(b)(4) Performance Study Protocol

(b)(4) Performance Study Protocol

(b)(4) Performance Study Protocol

(b)(4) Performance Study Protocol

(b)(4) Performance Study Protocol

(b)(4) Performance Study Protocol

(b)(4) Performance Study Protocol

(b)(4) Performance Study Protocol

(b)(4) Performance Study Protocol

(b)(4) Performance Study Protocol

(b)(4) Performance Study Protocol

(b)(4) Performance Study Protocol

DEPARTMENT OF HEALTH AND HUMAN SERVICES

Public Health Service
Food and Drug Administration
2098 Gaither Road
Rockville, Maryland 20850

September 5, 2007

Barbara Preisel-Simmons Ph.D.
Manager Regulatory Affairs
Siemens Medical Solutions Diagnostics
511 Benedict Ave.
Tarrytown, NY 10591-5097 US

Re: k971418/A004
Received: July 13, 2007

Categorization Notification

Regulations codified at 42 CFR 493.17 et. seq., implementing the Clinical Laboratory Improvement Amendments of 1988, require the Secretary to provide for the categorization of specific clinical laboratory test systems by the level of complexity. Based upon these regulations, the following commercially marketed test system or assay for the analyte is categorized below:

Test System/Analyte (s) : (SEE ATTACHMENT)

This complexity categorization is effective as of the date of this notification and will be reported on FDA's home page http://www.fda.gov/cdrh/clia. This categorization information may be provided to the user of the commercially marketed test system or assay as specified for the analyte indicated. It will also be announced in a Federal Register Notice, which will provide opportunity for comment on the decision. FDA reserves the right to reevaluate and recategorize this test based upon the comments received in response to the Federal Register Notice.

If you change the test system name or your company's name or if a distributor's name replaces your name, you must request another categorization by sending in the revised labeling along with a letter to FDA referencing the document number above.

If you have any questions regarding this complexity categorization, please contact Courtney Harper at 240-276-0694.

Sincerely yours,

Steven Gutman

Steven I. Gutman, M.D., M.B.A.
Director
Office of *In Vitro* Diagnostic Device
Evaluation and Safety
Center for Devices and Radiological Health

ATTACHMENT

Document Number : k971418/A004

Test System: ADVIA Centaur CP (BR Assay)
Analyte : CANCER ANTIGEN 27.29 (CA 27.29)
Complexity : MODERATE

CLIA Routing Slip

Document No : k971418/A004

Division: DCTD
Branch: CTXB

Applicant: Siemens Medical Solutions Diagnostics
Trade Name: Chiron diagnostics automated chemiluminescence system (asc) centaur analyzer

DMC Date Received: July 13, 2007
Division Date Received: July 13, 2007

Categorization Information

CLIA Reviewer: Rufina Carlos [RXC]
Date Review Completed: September 5, 2007

Date Branch Concurred: September 5, 2007
Date Coordinator Concurred: September 5, 2007
Effective Date: September 5, 2007

Test Systems/Analytes/Grading

(See Attachment)

DMC 9/12

ATTACHMENT

Document Number : k971418/A004

Test System : ADVIA Centaur CP (BR Assay)
Analyte : CANCER ANTIGEN 27.29 (CA 27.29)
Complexity : MODERATE [11]
Knowledge [2]; Training and Experience [2]; Reagents Preparation [1];
Operational Steps [1]; Quality Control [1];
Troubleshooting and Maintenance [2]; Interpretation and Judgment [2]
Rationale : CHEM-001

K 971418/A4

DUPLICATE

BR

Assay for CA 27.29

Assay Summary

Sample Type	**Serum**
Sample Volume	**25 µL**
Calibrator	**G**
Sensitivity and Assay Range	**3.5 – 450 U/mL**

Contents

REF	Contents	Number of Tests
03896216 (116735)	5 ReadyPack® primary reagent packs containing ADVIA Centaur® BR Lite Reagent and Solid Phase	250
	ADVIA Centaur and ADVIA Centaur CP BR Master Curve card	
or		
02419937 (116734)	1 ReadyPack primary reagent pack containing ADVIA Centaur BR Lite Reagent and Solid Phase	50
	ADVIA Centaur and ADVIA Centaur CP BR Master Curve card	

For a definition of symbols used in product labeling, please refer to the Operator's Guide.

Intended Use

The ADVIA Centaur CP BR assay is an *in vitro* diagnostic test for the quantitative serial determination of cancer antigen CA 27.29 in human serum using the ADVIA Centaur CP System. The test is intended for use as an aid in monitoring patients previously treated for Stage II or Stage III breast cancer. Serial testing for CA 27.29 in the serum of patients who are clinically free of disease should be used in conjunction with other clinical methods used for the early detection of cancer recurrence. The test is also intended for use as an aid in the management of breast cancer patients with metastatic disease by monitoring the progression or regression of disease in response to treatment.

WARNING: The concentration of CA 27.29 in a given specimen, as determined by assays from different manufacturers, can vary because of differences in assay methods and reagent specificity. The results reported by the laboratory to the physician must include the identity of the assay for CA 27.29 used. Values obtained with different assay methods cannot be used interchangeably. If, in the course of monitoring a patient, the assay method used for determining serial levels of CA 27.29 is changed, the laboratory must perform additional serial testing to confirm baseline values.

United States federal law restricts this device to sale and distribution by or on the order of a physician, or to a clinical laboratory; and use is restricted to, by, or on the order of a physician.

Materials Required But Not Provided

REF	Description	Contents
02034474	Calibrator G	6 vials of low calibrator CAL L
(112777)		6 vials of high calibrator CAL H
or		
06354201	Calibrator G	2 vials of low calibrator CAL L
(112776)		2 vials of high calibrator CAL H
06288756 (116746)	ADVIA Centaur BR Pretreatment Reagent PRE	2 ReadyPack ancillary reagent packs containing 10.0 mL/pack

Optional Reagents

REF	Description	Contents
07907174 (110313)	ADVIA Centaur Multi-Diluent 1 M-DIL 1	6 ReadyPack ancillary reagent packs containing 25 mL/pack
or		
07293184 (110312)	ADVIA Centaur Multi-Diluent 1 M-DIL 1	2 ReadyPack ancillary reagent packs containing 25 mL/pack
09348792 (672177)	Multi-Diluent 1 M-DIL 1	50 mL/vial
04554629 (112771)	BR Master Curve Material	7 x 1 mL

Summary and Explanation of the Test

Breast cancer is the most common cancer among women in the United States. While most newly diagnosed cases of breast cancer present with only local disease, where the 5 year survival rate is 96%, 42% are diagnosed with disease outside the breast.[1] For these women, the 5 year survival rate is 76% for those with regional disease and only 20% for those with distant metastases.[2] The vast majority of breast cancer deaths are from advanced, disseminated disease. Although many therapeutic modalities exist for the treatment of metastatic disease, most breast cancers usually become refractory to specific drugs and require second and third line regimens. A circulating tumor marker, such as CA 27.29, which can monitor response to therapy and can indicate disease status is a valuable tool in the management of these patients.

CA 27.29 is a highly polymorphic glycoprotein belonging to the mucin family and is the product of the MUC-1 gene.[3] It is most useful using serial measurements to monitor both the course of disease and response to therapy because of the direct correlation of changing levels of CA 27.29 with clinical status.[4,5] In patients with known metastases, a reduction in levels of this marker indicates a good response to treatment, while increasing levels indicate resistance to therapy and progressive disease and justify further clinical evaluation and regular monitoring.[6] It has also been shown that an elevation of CA 27.29 levels above the upper limit of normal in patients with no clinical evidence of disease is an early indicator of recurrence.[7] An elevated serum CA 27.29 level in patients in remission of Stage II or III breast cancer provided a positive predictive value of 83.3% for recurrent disease, with an average lead time of 5.3 months before recurrence was clinically established.[7]

6

Assay Principle

The ADVIA Centaur CP BR assay is a fully automated, competitive immunoassay using direct, chemiluminescent technology. The Lite Reagent is composed of a monoclonal mouse antibody specific for CA 27.29, labeled with acridinium ester. The antibody used in the assay, MAb B27.29, binds to a peptide epitope in the tandem repeat region of the MUC-1 gene product. The Solid Phase is composed of purified CA 27.29, which is covalently coupled to paramagnetic particles. After onboard pretreatment, the sample is incubated with both Lite Reagent and Solid Phase simultaneously for 9.66 minutes.

The system automatically performs the following steps:

- dispenses 25 µL of sample and 50 µL of Pretreatment Reagent into a cuvette and incubates for 4.66 minutes at 37°C
- dispenses 50 µL of Lite Reagent and 250 µL of Solid Phase and incubates for 9.66 minutes at 37°C
- separates, aspirates, and washes the cuvettes with Wash 1
- dispenses 300 µL each of Acid Reagent (R1) and Base Reagent (R2) to initiate the chemiluminescent reaction
- reports results according to the selected option, as described in the system operating instructions or in the online help system

An inverse relationship exists between the amount of CA 27.29 present in the patient sample and the amount of relative light units (RLUs) detected by the system.

Specimen Collection and Handling

Serum is the recommended sample type for this assay.

Plasma samples should not be used because their performance in this assay has not been determined.

The following recommendations for handling and storing blood samples are furnished by the Clinical and Laboratory Standards Institute (CLSI, formerly NCCLS):[8]

- Collect all blood samples observing universal precautions for venipuncture.
- Allow samples to clot adequately before centrifugation.
- Keep tubes stoppered and upright at all times.
- Do not use samples that have been stored at room temperature for longer than 8 hours.
- Tightly cap and refrigerate specimens at 2 to 8°C if the assay is not completed within 8 hours.
- Freeze samples at or below -20°C if the sample is not assayed within 48 hours.
- Freeze samples only once and mix thoroughly after thawing.

Before placing samples on the system, ensure that samples have the following characteristics:

- Samples are free of fibrin or other particulate matter. Remove particulates by centrifugation at 1000 x g for 15 to 20 minutes.
- Samples are free of bubbles.

Reagents

Store the reagents upright at 2–8°C.

Mix all primary reagent packs by hand before loading them onto the system. Visually inspect the bottom of the reagent pack to ensure that all particles are dispersed and resuspended. For detailed information about preparing the reagents for use, refer to the Operator's Guide.

Reagent Pack	Reagent	Volume	Ingredients	Storage	Stability
ADVIA Centaur BR ReadyPack primary reagent pack	Lite Reagent	2.5 mL/ reagent pack	monoclonal mouse anti-CA 27.29 antibody (~1.2 µg/mL) labeled with acridinium ester in buffered saline with preservatives	2–8°C	until the expiration date on the pack label. For onboard stability, refer to *Onboard Stability and Calibration Interval.*
	Solid Phase	12.5 mL/ reagent pack	human CA 27.29 (~0.72 U/mL) covalently coupled to paramagnetic particles in buffer with preservatives	2–8°C	until the expiration date on the pack label. For onboard stability, refer to *Onboard Stability and Calibration Interval.*
ADVIA Centaur BR PRE ReadyPack ancillary reagent pack	Pretreatment Reagent	10.0 mL/ reagent pack	sodium hydroxide (0.24N)	2–8°C	until the expiration date on the pack label or 28 consecutive days after accessing the ancillary reagent pack
ADVIA Centaur M-DIL 1 ReadyPack ancillary reagent pack	Multi-Diluent 1	25.0 mL/ reagent pack	equine serum with sodium azide (0.1%) and preservatives	2–8°C	until the expiration date on the pack label or 28 consecutive days after accessing the ancillary reagent pack

R36/38 **Irritant!** Irritating to eyes and skin. In case of contact with eyes, rinse immediately with plenty of water and seek medical advice. Avoid contact with skin and eyes.
S26
S24/25 **Contains:** sodium hydroxide; Pretreatment Reagent

CAUTION! POTENTIAL BIOHAZARD: Contains human source material. While each human serum or plasma donor unit used in the manufacture of this product was tested by FDA-approved methods and found nonreactive for hepatitis B surface antigen (HBsAg), antibody to hepatitis C (HCV), and antibody to HIV-1/2, all products manufactured using human source material should be handled as potentially infectious. Because no test method can offer complete assurance that hepatitis B or C viruses, HIV, or other infectious agents are absent, these products should be handled according to established good laboratory practices.[9-11]

CAUTION: This device contains material of animal origin and should be handled as a potential carrier and transmitter of disease.

NOTE: Sodium azide can react with copper and lead plumbing to form explosive metal azides. On disposal, flush reagents with a large volume of water to prevent the buildup of azides, if disposal into a drain is in compliance with federal, state, and local requirements.

For *In Vitro* Diagnostic Use.

3

Loading Reagents

Ensure that the system has sufficient primary and ancillary reagent packs. For detailed information about preparing the system, refer to the system operating instructions or to the online help system.

Mix all primary reagent packs by hand before loading them onto the system. Visually inspect the bottom of the reagent pack to ensure that all particles are dispersed and resuspended. For detailed information about preparing the reagents for use, refer to the Operator's Guide.

Load the primary reagent packs in the primary reagent area. You can use the arrows on the end label as a placement guide. However, left, center, and right placement of the primary reagent packs is not required, because the ADVIA Centaur CP System has only one reagent probe. The system automatically mixes the primary reagent packs to maintain homogeneous suspension of the reagents. Load the BR Pretreatment Reagent ReadyPack reagent pack in the ancillary reagent area. For detailed information about loading reagents, refer to the system operating instructions or to the online help system.

If automatic dilution of a sample is required, load ADVIA Centaur Multi-Diluent 1 in the ancillary reagent area.

Onboard Stability and Calibration Interval

Onboard Stability	Calibration Interval
28 days	7 days

The ADVIA Centaur CP BR assay requires a two-point calibration:

- when changing lot numbers of primary reagent packs
- when replacing system components
- when quality control results are repeatedly out of range

NOTE:

- Discard the primary reagent packs at the end of the onboard stability interval.
- Do not use reagents beyond the expiration date.

Master Curve Calibration

The ADVIA Centaur CP BR assay requires a Master Curve calibration when using a new lot number of Lite Reagent and Solid Phase. For each new lot number of Lite Reagent and Solid Phase, use the barcode reader or keyboard to enter the Master Curve values on the system. The Master Curve card contains the Master Curve values. For detailed information about entering calibration values, refer to the system operating instructions or to the online help system.

Quality Control

For detailed information about entering quality control values, refer to the system operating instructions or to the online help system.

To monitor system performance and chart trends, as a minimum requirement, assay two levels of quality control material on each day that samples are analyzed. Assay quality control samples when performing a two-point calibration. Treat all quality control samples the same as patient samples.

Refer to the quality control product insert for the suggested Expected Values. If the quality control results do not fall within the Expected Values or within the laboratory's established values, do not report results. Take the following actions:

- Verify that the materials are not expired.

- Verify that required maintenance was performed.
- Verify that the assay was performed according to the instructions for use.
- Rerun the assay with fresh quality control samples.
- If necessary, contact your local technical support provider or distributor for assistance.

Sample Volume

This assay requires 25 µL of sample for a single determination. This volume does not include the unusable volume in the sample container or the additional volume required when performing duplicates or other tests on the same sample. Sample predilution is not required. Refer to *Dilutions* for information about samples with values above the assay range. For detailed information about determining the minimum required volume, refer to the system operating instructions or to the online help system.

Assay Procedure

For detailed procedural information, refer to the system operating instructions or to the online help system.

Procedural Notes

Calculations

For detailed information about how the system calculates results, refer to the system operating instructions or to the online help system.

The system reports serum CA 27.29 results in U/mL.

Dilutions

- Dilute and retest serum samples with CA 27.29 levels greater than 450 U/mL to obtain accurate results.
- The system can automatically dilute serum samples, or you can prepare dilutions manually.
- For automatic dilutions, ensure that ADVIA Centaur Multi-Diluent 1 is loaded and set the system parameters as follows:

  Dilution point: ≤ 450 U/mL

  Dilution factor: 10, 20

  For detailed information about automatic dilutions, refer to the system operating instructions or to the online help system.
- Manually dilute the patient samples when patient results exceed the linearity of the assay using automatic dilution, or when laboratory protocol requires manual dilution.
- Use Multi-Diluent 1 to manually dilute patient samples, and then load the diluted sample in the sample rack, replacing the undiluted sample.
- Ensure that results are mathematically corrected for dilution. If a dilution factor is entered when scheduling the test, the system automatically calculates the result.

Disposal

Dispose of hazardous and biologically contaminated materials according to the practices of your institution. Discard all materials in a safe and acceptable manner and in compliance with all federal, state, and local requirements.

10

Limitations

NOTE: Do not interpret levels of CA 27.29 as absolute evidence of the presence or the absence of malignant disease. Before treatment, patients with confirmed breast carcinoma frequently have levels of CA 27.29 within the range observed in healthy individuals. Additionally, elevated levels of CA 27.29 can be observed in patients with nonmalignant diseases. Measurements of CA 27.29 should always be used in conjunction with other diagnostic procedures, including information from the patient's clinical evaluation.

WARNING: Do not use the ADVIA Centaur CP BR assay as a screening test or for diagnosis. Normal levels of CA 27.29 do not always preclude the presence of disease.

Heterophilic antibodies in human serum can react with reagent immunoglobulins, interfering with *in vitro* immunoassays.[12] Patients routinely exposed to animals or to animal serum products can be prone to this interference and anomalous values may be observed. Additional information may be required.

Exercise caution when interpreting ADVIA Centaur CP BR levels during pregnancy.[13]

The concentration of CA 27.29 in a given specimen determined with assays from different manufacturers can vary because of differences in assay methods, calibration, and reagent specificity. CA 27.29 determined with different manufacturers' assays will vary depending on the method of standardization and antibody specificity. Therefore, it is important to use assay-specific values to evaluate quality control results.

Endogenous interferents, such as high concentrations of hemoglobin, lipids, bilirubin and total protein, had no effect beyond the limits of random within-run variations. Mean recoveries were within 5% of the control level for all interferents tested.

Substance	Amount	% Recovery
Conjugated Bilirubin	20 mg/dL	99.6
Unconjugated Bilirubin	20 mg/dL	100.0
Triglycerides	3000 mg/dL	101.6
Hemoglobin	500 mg/dL	104.3
Total Protein	12 g/dL	100.0

Endogenous interfering substances were determined with the ADVIA Centaur BR assay.

11

Expected Results

The analytical performance of the ACS:180® BR assay was evaluated using a panel of 103 samples from patients with clinically diagnosed breast cancer. All samples were analyzed using the ACS:180 BR assay and another commercially available method that also measures CA 27.29. A correlation of the two assays was performed by linear regression analysis. The correlation coefficient was 0.96 with a slope of 1.045 and an intercept of 7.6.

During the clinical trial to establish the performance characteristics of the ACS:180 BR assay, serum samples from 314 apparently healthy female blood donors were tested. The women were over the age of 18 years and approximately 50% were post-menopausal. The Upper Limit of Normal (ULN) for this group, defined as the 99th percentile of the observed results, was established at 38.6 U/mL. Additional data were generated on a panel of samples from patients with various diseases and conditions, as shown in the following table. These data indicate the percentage of samples with levels of CA 27.29 above the ULN.

Sample Category	N	% of Patients with levels of CA 27.29 > 38.6 U/mL (ULN)
Normals	314	1
Metastatic breast cancer	97	81
Benign breast disease	129	3
Malignant disease		
Stomach	29	7
Colon	43	26
Lung	47	43
Pancreas	45	47
Ovarian	50	56
Liver	20	60
Prostate	34	18
Uterus	30	13
Pregnancy	49	2
Lactating women	37	11
Cirrhosis	25	24
Endometriosis	24	8
Chronic Hepatitis	48	10
Ovarian Cyst	50	6
Renal Impairment	20	15

As with all *in vitro* diagnostic assays, each laboratory should determine its own reference range(s) for the diagnostic evaluation of patient results.[14] The expected results were determined with the ACS:180 BR assay. The results were confirmed for the ADVIA Centaur CP BR assay. Refer to *Method Comparison*.

Clinical Trial Results

Monitoring Stage II or Stage III Breast Cancer Patients for Disease Recurrence

This ACS:180 BR assay clinical trial was comprised of specimens from 162 patients who were enrolled in a multi-center prospective study. These patients were previously treated for Stage II or Stage III breast cancer and had no evidence of disease (NED) at the time of study entry (at least 1 year post-surgery). Patients were monitored over the length of the study (18 to 24 months) by determining the CA 27.29 levels in serial blood specimens drawn at each visit with their clinician. All patients included in the ACS:180 BR clinical study were lymph node positive at time of surgery, and had at least three serial bleeds after study enrollment. Specimen testing was performed in parallel using the ACS:180 BR assay and another commercially available method that measures CA 27.29.

Sensitivity, specificity, and predictive values (PPV and NPV) of the ACS:180 BR assay as an aid in monitoring for the recurrence of breast cancer were calculated against disease recurrence as defined by clinical outcome. Of the 162 patients included in the study, 25 showed clinical evidence of disease recurrence. Breast cancer recurrence was established using clinical symptoms, and/or general or specific imaging techniques; for example, x-ray, mammogram, magnetic resonance imaging, computerized tomography, ultrasound, bone scan, or liver scan. The utility of the ACS:180 BR assay as an aid for the detection of breast cancer recurrence was analyzed under two scenarios:

- Using any single ACS:180 BR result greater than the ULN (38.6 U/mL) prior to disease recurrence.
- Using two consecutive ACS:180 BR results greater than the ULN (38.6 U/mL) prior to disease recurrence.

Assay results above the ULN must have occurred prior to, or at the same time as, the clinical diagnosis of recurrence in order to be considered predictive of disease recurrence. Statistical analyses showed that the ACS:180 BR assay performance at the testing sites was not statistically different, so the combined performance data from all patients are shown in the following table:

Assay Concordance with Disease Recurrence

Performance Parameter	Estimate* Using One Elevated Value	Estimate* Using Two Consecutive Elevated Values
Sensitivity	60% (39 – 79)	48% (28 – 69)
Specificity	93% (87 – 96)	98% (94 – 100)
PPV	60% (39 – 79)	80% (52 – 96)
NPV	93% (87 – 96)	91% (85 – 95)

* Numbers in parentheses represent the 95% confidence intervals.

In this clinical trial, results from the commercially available comparator assay, using one elevated value, showed that sensitivity ranged from 58% to 62% at the two sites, specificity ranged from 53% to 97%, PPV ranged from 23% to 73%, and NPV ranged from 84% to 94%. Using two elevated values, the sensitivity ranged from 38% to 42%, specificity ranged from 86% to 100%, PPV ranged from 42% to 100%, and NPV ranged from 86% to 92%.

The positive and negative predictive values vary depending on the prevalence of disease recurrence. The following table contains the ACS:180 BR expected positive and negative predictive values for a range of realistic prevalences for the recurrence of disease. These expected values were based on the combined assay performance data presented in the preceeding table and the mean prevalence rate of disease recurrence of 15% at the two testing sites.

Expected Predictive Values at Various Prevalences of Disease Recurrence Using One or Two Consecutive Assay Values Greater Than the Upper Limit of Normal

	Using One Elevated Value		Using Two Consecutive Elevated Values	
Prevalence of Disease Recurrence	PPV	NPV	PPV	NPV
10%	49%	95%	73%	94%
15%	60%	93%	81%	91%
20%	68%	90%	86%	88%
25%	74%	87%	89%	85%
30%	79%	84%	91%	81%

Management of Patients with Metastatic Disease for Progression or Regression of Disease in Response to Therapy

This clinical trial was a multi-center prospective study of 97 breast cancer patients with metastatic disease. All patients received treatment during the study. Patients were enrolled at six sites and all ACS:180 BR testing was performed at three laboratories not associated with the patient enrollment sites.

The clinical sensitivity and specificity of the ACS:180 BR assay in relation to changing disease status in metastatic breast cancer patients were determined using a 20% increase in assay levels as an indication of progressing disease. In addition, the positive predictive value, the percentage of patients with increases above 20% who had clinically progressing disease was calculated. Calculations were based on the 79 patients who had assay levels above the ULN. Patients were considered to have completed the trial at the time of diagnosis of progressing or regressing disease. Patients with stable disease were followed anywhere from 2 to 7 months. The following tables summarize the study results:

Concordance of Changes in Clinical Status and Changes in CA 27.29 Antigen Level among 79 Patients

	Disease Status	
Change in Assay Levels	Progression (number of patients)	Regression/Stable (number of patients)
≥ 20% Increase	33	10
< 20% Increase	12	24

ACS:180 BR Assay Concordance with Clinical Diagnosis in Metastatic Breast Cancer Patients

	Estimate*
Sensitivity to Change in Disease Status	73% (58 – 85%)
Specificity to Change in Disease Status	71% (53 – 85%)
Positive Predictive Value to Change in Disease Status	77% (61 – 88%)
Negative Predictive Value to Change in Disease Status	67% (49 – 81%)

* Values in parentheses represent the 95% confidence intervals.

The positive and negative predictive values (PPV and NPV) to change in disease status depend on the underlying prevalence of disease progression. The PPV and NPV values listed in the table above, were calculated using the prevalence of disease progression (57%) which was

observed in the clinical trial. The following table lists the positive and negative predictive values for other hypothetical prevalences of disease progression:

Prevalence of Disease Progession	PPV	NPV
25%	45.4%	88.8%
35%	57.3%	83.1%
45%	67.1%	76.4%
55%	75.3%	68.4%
65%	82.2%	58.8%
75%	88.2%	46.9%

Performance Characteristics

Specificity

There are no known cross-reactants for CA 27.29. The potential interference of chemotherapeutic agents, therapeutic drugs, and related tumor marker antigens was tested by adding these substances to five serum pools containing CA 27.29 ranging from 5.1 to 445.4 U/mL. The therapeutic drugs were spiked into patient serum pools and then diluted to a final concentration 10 times (or less depending on the solubility of the drug) the peak concentration normally found in serum immediately after infusion. The level of CA 27.29 in each of these pools was then determined and normalized to the level without the respective drugs or antigens.

Substance	Mean % Recovery	Substance	Mean % Recovery
Acetaminophen (10X)	96.3	Granisetron HCl (10X)	99.9
Cimetidine (10X)	100.9	Lorazepam (10X)	98.0
Ciprofloxacin (10X)	100.1	Megestrol acetate (5X)	105.2
Cyclophosphamide (1X)	96.2	Methotrexate (10X)	105.8
Codeine (10X)	96.9	Morphine (10X)	95.6
Dexamethasone (10X)	100.2	Ondansetron (10X)	93.3
Diphenhydramine HCl (10X)	101.8	Paclitaxel (2X)	101.7
Doxorubicin (10X)	95.9	Prochlorperazine (10X)	96.4
Etoposide (2X)	99.5	Tamoxifen (10X)	96.6
5-Fluorouracil (10X)	104.2	Vinorelbine tartrate (10X)	104.9

Antigen	Amount	Mean % Recovery
Carcinoembryonic antigen (CEA)	30 ng/mL	103.8
Ovarian Cancer antigen (CA 125)	300 U/mL	105.9
GI Cancer antigen (CA 19-9)	300 U/mL	103.6

Interference was determined with the ACS:180 BR assay according to CLSI Document EP7-A2.[15]

Analytical Sensitivity and Assay Range

The ADVIA Centaur CP BR assay measures CA 27.29 concentrations up to 450 U/mL with a minimum detectable concentration (analytical sensitivity) of 3.5 U/mL. Analytical sensitivity is defined as the concentration of CA 27.29 that corresponds to the RLUs that are two standard deviations less than the mean RLUs of replicate determinations of the BR zero standard. This response is an estimate of the minimum detectable concentration with 95% confidence.

Method Comparison

For 598 samples in the range of 4.31 to 448.9 U/mL, the relationship of the ADVIA Centaur CP BR assay to the ADVIA Centaur BR assay is described by the following equation:

ADVIA Centaur CP BR = 0.986 (ADVIA Centaur BR) + 0.87 U/mL

Correlation coefficient (r) = 0.993

For 143 samples in the range of 4.42 to 342.6 U/mL, the relationship of the ADVIA Centaur CP BR assay to the ACS:180 BR assay is described by the following equation:

ADVIA Centaur CP BR = 1.03 (ACS:180 BR) – 3.31 U/mL

Correlation coefficient (r) = 0.995

Dilution Recovery

Five human serum samples in the range of 288.7 to 407.5 U/mL of CA 27.29 were diluted 1:2, 1:4, 1:8, and 1:16 with Multi-Diluent 1 and assayed for recovery and parallelism. The recoveries ranged from 78.4% to 125.8% with a mean of 107.5%.

Sample	Dilution	Observed (U/mL)	Expected (U/mL)	Recovery %
1	—	367.9		
	1:2	196.8	184.0	107.0
	1:4	99.27	91.98	107.9
	1:8	54.20	45.99	117.9
	1:16	24.67	22.99	107.3
	Mean			110.0
2	—	288.7		
	1:2	137.2	144.3	95.0
	1:4	74.11	72.17	102.7
	1:8	37.82	36.08	104.8
	1:16	14.14	18.04	78.4
	Mean			95.2
3	—	407.5		
	1:2	225.2	203.8	110.5
	1:4	110.2	101.9	108.1
	1:8	60.75	50.94	119.3
	1:16	25.10	25.47	98.6
	Mean			109.1
4	—	394.1		
	1:2	221.0	197.1	112.1
	1:4	110.5	98.53	112.2
	1:8	61.98	49.26	125.8
	1:16	26.98	24.63	109.5
	Mean			114.9
5	—	364.6		
	1:2	195.7	182.3	107.3
	1:4	98.50	91.16	108.1
	1:8	54.94	45.58	120.5
	1:16	22.30	22.79	97.8
	Mean			108.4
Mean				**107.5**

Spiking Recovery

Varying amounts of CA 27.29 were added to six serum samples with endogenous levels of CA 27.29 ranging from 11.89 to 31.36 U/mL. The amount of CA 27.29 that was added varied from 29.94 to 460.29 U/mL. When compared to the expected value, the measured (recovered) values of CA 27.29 averaged 98.6% with a range of 87.5 to 128.9%.

Sample	Amount Added (U/mL)	Observed (U/mL)	Recovery %
1	—	11.89	
	29.94	40.54	95.7
	56.41	68.06	99.6
	90.91	99.29	96.1
	154.6	161.7	96.9
	299.9	314.4	100.9
	Mean		97.8
2	—	11.93	
	29.94	40.48	95.4
	56.41	66.11	96.0
	90.91	104.16	101.5
	154.6	165.4	99.3
	299.9	315.2	101.2
	Mean		98.7
3	—	22.06	
	29.94	52.35	101.2
	56.41	79.87	102.5
	90.91	113.71	100.8
	154.6	176.1	99.7
	299.9	333.4	103.8
	Mean		101.6

Sample	Amount Added (U/mL)	Observed (U/mL)	Recovery %
4	—	19.19	
	29.94	45.72	88.6
	56.41	91.92	128.9
	90.91	107.26	96.9
	154.6	170.1	97.6
	299.9	315.2	98.7
	Mean		102.2
5	—	31.36	
	29.94	58.33	90.1
	56.41	84.80	94.7
	90.91	120.12	97.6
	154.6	179.8	96.0
	299.9	328.8	99.2
	Mean		95.5
6	—	12.79	
	29.94	38.99	87.5
	56.41	69.03	99.7
	90.91	100.99	97.0
	154.58	162.0	96.5
	299.9	308.4	98.6
	460.3	458.1	96.7
	Mean		96.0
Mean			**98.6**

Spiking Recovery testing was previously determined on the ACS:180 BR assay.

Precision

Four samples were assayed 2 times per day, in 20 runs, over a 10-day period on 2 systems (n = 160 for each sample). The following results were obtained:

Mean (U/mL)	Within-run % CV	Run-to-run % CV	Total % CV
31.45	4.0	6.9	8.0
42.69	3.8	5.8	6.9
99.6	1.8	4.0	4.4
126.9	2.4	2.3	3.3

Traceability of Standardization

The ADVIA Centaur CP BR assay is traceable to an internal standard manufactured using highly purified CA 27.29.

Evaluating Results

The following is recommended when you observe poor reproducibility of CA 27.29 values at low levels or if you are not satisfied with assay performance:

- Ensure that the assay reagent and calibrator lot numbers and expiration dates match those entered in the system.
- Ensure that the calibrators, quality control materials, and assay reagents were prepared according to the recommended procedures.
- Ensure that the recommended sample collection and handling procedures were followed.
- Ensure that the recommended system cleaning procedures were followed.
- Visually check the probe and tubing for obstructions, leaks, and deformities such as pinched or crimped tubing.
- Take further corrective action following established laboratory procedures.
- Calibrate the system using new assay reagents, calibrators, and quality control samples.
- If necessary, contact your local technical support provider or distributor for assistance.

References

1. Breast Cancer Facts and Figures, American Cancer Society, 1995.
2. Smart CR, Byrne C, Smith RA, et al. Twenty year follow-up of the breast cancers diagnosed during the breast cancer detection demonstration project. CA, a Cancer Journal for Clinicians, 1997, 47:134-149.
3. Reddish MA, Helbrecht N, Almeida AF, et al. Epitope mapping of MAb B27.29 within the peptide core for the malignant breast varcinoma-associated mucin antigen coded for by the human MUC-1 gene. J Tumor Marker Oncol. 1992, 7:19-27.
4. Abbate I, Correale M, Musci MD, and Dragone D. Monoclonal antibody B27.29 against mucinous breast cancer associated antigen CA 27.29 in breast cancer. Br Cancer Res and Treatment 1991, 19(2):123.
5. Dnistrain AM, Schwartz MK, Greenberg EJ, Smith CA, Schwartz DC, Maimonis P. Evaluation of a breast cancer antigen assayed on the Ciba Corning ACS:180 Automated Chemiluminescence System. 1996, J Tumor Marker Oncol. 11(3):5-10.
6. Bon GG, von Mensdorff-Pouilly S, Kenemans P, van Kamp GJ, et al. Clinical and technical evaluation of ACS BR serum assay of MUC-1 gene-derived glycoprotein in breast cancer, and comparison with CA 15-3 assays. Clin Chem, 1997, 43(4):585-593.
7. Chan DW, Beveridge RA, Muss H, et al. Use of Truquant BR Radioimmunoassay for early detection of breast cancer recurrence in patients with Stage II and Stage III disease. J Clin Oncol 1997, 15(6):2322-2328.
8. Clinical and Laboratory Standards Institute (formerly NCCLS). *Procedures for the Handling and Processing of Blood Specimens; Approved Guideline - Third Edition.* Wayne, PA: Clinical and Laboratory Standards Institute; 2004. NCCLS Document H18-A3.
9. Centers for Disease Control. 1988. Update: Universal precautions for prevention of transmission of human immunodeficiency virus, hepatitis B virus and other bloodborne pathogens in healthcare settings. MMWR, 37:377–82, 387–8.
10. Clinical and Laboratory Standards Institute (formerly NCCLS). *Protection of Laboratory Workers From Occupationally Acquired Infections; Approved Guideline - Third Edition.* Wayne, PA: Clinical and Laboratory Standards Institute; 2005. NCCLS Document M29-A3.
11. Federal Occupational Safety and Health Administration, Bloodborne Pathogens Standard, 29 CFR 1910.1030.
12. Boscato LM, Stuart MC. Heterophilic antibodies: a problem for all immunoassays. Clin Chem 1988;34:27–33.
13. Bombardieri E, Pizzichetta M, Veronesi P, et al. CA 15-3 determination in patients with breast cancer: clinical utility for the detection of distant metastases. Eur J Cancer 1993;29A(1):144–6.
14. Clinical and Laboratory Standards Institute (formerly NCCLS). *How to Define and Determine Reference Intervals in the Clinical Laboratory; Approved Guideline - Second Edition.* Wayne, PA: Clinical and Laboratory Standards Institute; 2000. NCCLS Document C28-A2.
15. Clinical and Laboratory Standards Institute (formerly NCCLS). *Interference Testing in Clinical Chemistry; Approved Guideline - Second Edition.* Wayne, PA: Clinical and Laboratory Standards Institute; 2005. NCCLS document EP7-A2.

ADVIA Centaur, ReadyPack, and ACS:180 are trademarks of Siemens Medical Solutions Diagnostics.

© 2007 Siemens Medical Solutions Diagnostics. All rights reserved.

US Pats 4,745,181; 4,918,192; 4,960,716; 5,110,932; 5,609,822; 5,788,928

Origin: US

Siemens Medical Solutions Diagnostics
Tarrytown, NY 10591-5097 USA

EC REP Siemens Medical Solutions Diagnostics
Europe Limited
Chapel Lane, Swords, Co. Dublin, Ireland

Siemens Medical Solutions
Diagnostics Pty Ltd
ABN 65 007 436 651
885 Mountain Highway
Bayswater Victoria 3153
Australia

Siemens Medical Solutions Diagnostics
3-20-14 Higashi-Gotanda, Shinagawa
Tokyo, 141-8641, Japan

DEPARTMENT OF HEALTH & HUMAN SERVICES

Public Health Service
Food and Drug Administration

Memorandum

Date: 7-13-07

From: DMC (HFZ-401)

Subject: Premarket Notification Number(s): K 971418/174

To: Division Director: CH/ DCTD

The attached information has been received by the 510(k) DMC on the above referenced 510(k) submission(s). Since a final decision has been rendered, this record is officially closed.

Please review the attached document and return it to the DMC, with one of the statements checked below.

_____Information does not change the status of the 510(k); no other action required by the DMC; please add to image file. (Prepare K-25) THIS DOES NOT APPLY TO TRANSFER OF OWNERSHIP. PLEASE BRING ANY TRANSFER OF OWNERSHIP TO POS.

_____Additional information requires a new 510(k); however, the information submitted is incomplete; (Noitify company to submit a new 510(k);[Prepare the K30 Letter on the LAN]

___✓___No response necessary (e.g., hard copy of fax for the truthful and accuracy statement, 510(k) statement, change of address, phone number, or fax number).

CLIA CATEGORIZATION refers to laboratory test system devices reviewed by the Division of Clinical Laboratory Devices (HFZ-440

___✓___Information requires a **CLIA CATEGORIZATION**; the complexity may remain the same as the original 510(k) or may change as a result of the additional information (Prepare a CAT letter)

____Additional information requires a **CLIA CATEGORIZATION**; however, the information submitted is incomplete; (call or fax firm)

_____No response necessary

This information should be returned to the DMC within 10 working days from the date of this memorandum.

Reviewed by: RCarlos

Date: 9/5/07

SIEMENS

August 22, 2007

Mr. James Callaghan, OIVD
Document Mail Center
Center for Devices and Radiological Health
U.S. Food and Drug Administratiion
9200 Corporate Blvd. (HFZ-401)
Rockville, MD 20850

Dear Mr. Callaghan,

Re: FDA Phone Request of 22Aug07 for Official Correspondent of CLIA Categorization ADVIA Centaur CP requests

This letter is to inform the FDA that I am the official contact for the requests for CLIA categorization submitted to FDA by Seimens Medical Solutions Diagnostics starting from July 9, 2007.

The requests submitted are for previously cleared ADVIA Centaur Assays that have been applied to the ADVIA Centaur CP, a new member of the ADVIA Centaur analyzer family, in accordance with the Reagent Replacement and Instrument Family Policy.

I am sorry for the inconvenience this has created for the FDA.

Official Correspondent:
Carol A. Bianca
Senior Manager, Regulatory Affairs
Siemens Medical Solutions Diagnostics
511 Benedict Avenue
Tarrytown, NY 10591
Phone: 914 524-2531
Fax: 914 524-2500
Email: carol.bianca@siemens.com

Thank You and Best Regards

Carol A Bianca

Carol A. Bianca
Senior Manager, Regulatory Affairs
Siemens Medical Solutions Diagnostics

K 971418/A4

July 9, 2007

Document Mail Center
Center for Devices and Radiological Health
U.S Food and Drug Administration
9200 Corporate Blvd. (HFZ-401)
Rockville, MD 20850

Re: 510(k) For CLIA categorization only.

IVD assays requiring 510(k) clearance currently on the ADVIA Centaur were migrated to the ADVIA Centaur CP instrument platform following the Replacement Reagent and Instrument Family Policy Guidance Document. Siemens Medical Solutions Diagnostics is requesting CLIA categorization for the ADVIA Centaur CP assay for BR Ca 27.29 that migrated from the ADVIA Centaur. Attached are the two hard copies of the Package Inserts (IFU). The 510(k) clearance is K971418.

Sincerely,

Barbara Preisel-Simmons, Ph.D.
Manager Regulatory Affairs
Siemens Medical Solutions Diagnostics
511 Benedict Ave.
Tarrytown, NY 10591
914-524-2430
Fax: (914) 524-2500
Barbara.preisel-simmons@siemens.com

K13

BR

Assay for CA 27.29

Assay Summary

Sample Type	**Serum**
Sample Volume	**25 µL**
Calibrator	**G**
Sensitivity and Assay Range	**3.5 – 450 U/mL**

Contents

REF	Contents	Number of Tests
03896216 (116735)	5 ReadyPack® primary reagent packs containing ADVIA Centaur® BR Lite Reagent and Solid Phase ADVIA Centaur and ADVIA Centaur CP BR Master Curve card	250
or		
02419937 (116734)	1 ReadyPack primary reagent pack containing ADVIA Centaur BR Lite Reagent and Solid Phase ADVIA Centaur and ADVIA Centaur CP BR Master Curve card	50

For a definition of symbols used in product labeling, please refer to the Operator's Guide.

Intended Use

The ADVIA Centaur CP BR assay is an *in vitro* diagnostic test for the quantitative serial determination of cancer antigen CA 27.29 in human serum using the ADVIA Centaur CP System. The test is intended for use as an aid in monitoring patients previously treated for Stage II or Stage III breast cancer. Serial testing for CA 27.29 in the serum of patients who are clinically free of disease should be used in conjunction with other clinical methods used for the early detection of cancer recurrence. The test is also intended for use as an aid in the management of breast cancer patients with metastatic disease by monitoring the progression or regression of disease in response to treatment.

WARNING: The concentration of CA 27.29 in a given specimen, as determined by assays from different manufacturers, can vary because of differences in assay methods and reagent specificity. The results reported by the laboratory to the physician must include the identity of the assay for CA 27.29 used. Values obtained with different assay methods cannot be used interchangeably. If, in the course of monitoring a patient, the assay method used for determining serial levels of CA 27.29 is changed, the laboratory must perform additional serial testing to confirm baseline values.

United States federal law restricts this device to sale and distribution by or on the order of a physician, or to a clinical laboratory; and use is restricted to, by, or on the order of a physician.

Materials Required But Not Provided

REF	Description	Contents
02034474 (112777)	Calibrator G	6 vials of low calibrator CAL L 6 vials of high calibrator CAL H
or		
06354201 (112776)	Calibrator G	2 vials of low calibrator CAL L 2 vials of high calibrator CAL H
06288756 (116746)	ADVIA Centaur BR Pretreatment Reagent PRE	2 ReadyPack ancillary reagent packs containing 10.0 mL/pack

Optional Reagents

REF	Description	Contents
07907174 (110313)	ADVIA Centaur Multi-Diluent 1 M-DIL 1	6 ReadyPack ancillary reagent packs containing 25 mL/pack
or		
07293184 (110312)	ADVIA Centaur Multi-Diluent 1 M-DIL 1	2 ReadyPack ancillary reagent packs containing 25 mL/pack
09348792 (672177)	Multi-Diluent 1 M-DIL 1	50 mL/vial
04554629 (112771)	BR Master Curve Material	7 x 1 mL

Summary and Explanation of the Test

Breast cancer is the most common cancer among women in the United States. While most newly diagnosed cases of breast cancer present with only local disease, where the 5 year survival rate is 96%, 42% are diagnosed with disease outside the breast.[1] For these women, the 5 year survival rate is 76% for those with regional disease and only 20% for those with distant metastases.[2] The vast majority of breast cancer deaths are from advanced, disseminated disease. Although many therapeutic modalities exist for the treatment of metastatic disease, most breast cancers usually become refractory to specific drugs and require second and third line regimens. A circulating tumor marker, such as CA 27.29, which can monitor response to therapy and can indicate disease status is a valuable tool in the management of these patients.

CA 27.29 is a highly polymorphic glycoprotein belonging to the mucin family and is the product of the MUC-1 gene.[3] It is most useful using serial measurements to monitor both the course of disease and response to therapy because of the direct correlation of changing levels of CA 27.29 with clinical status.[4,5] In patients with known metastases, a reduction in levels of this marker indicates a good response to treatment, while increasing levels indicate resistance to therapy and progressive disease and justify further clinical evaluation and regular monitoring.[6] It has also been shown that an elevation of CA 27.29 levels above the upper limit of normal in patients with no clinical evidence of disease is an early indicator of recurrence.[7] An elevated serum CA 27.29 level in patients in remission of Stage II or III breast cancer provided a positive predictive value of 83.3% for recurrent disease, with an average lead time of 5.3 months before recurrence was clinically established.[7]

Assay Principle

The ADVIA Centaur CP BR assay is a fully automated, competitive immunoassay using direct, chemiluminescent technology. The Lite Reagent is composed of a monoclonal mouse antibody specific for CA 27.29, labeled with acridinium ester. The antibody used in the assay, MAb B27.29, binds to a peptide epitope in the tandem repeat region of the MUC-1 gene product. The Solid Phase is composed of purified CA 27.29, which is covalently coupled to paramagnetic particles. After onboard pretreatment, the sample is incubated with both Lite Reagent and Solid Phase simultaneously for 9.66 minutes.

The system automatically performs the following steps:

- dispenses 25 µL of sample and 50 µL of Pretreatment Reagent into a cuvette and incubates for 4.66 minutes at 37°C
- dispenses 50 µL of Lite Reagent and 250 µL of Solid Phase and incubates for 9.66 minutes at 37°C
- separates, aspirates, and washes the cuvettes with Wash 1
- dispenses 300 µL each of Acid Reagent (R1) and Base Reagent (R2) to initiate the chemiluminescent reaction
- reports results according to the selected option, as described in the system operating instructions or in the online help system

An inverse relationship exists between the amount of CA 27.29 present in the patient sample and the amount of relative light units (RLUs) detected by the system.

Specimen Collection and Handling

Serum is the recommended sample type for this assay.

Plasma samples should not be used because their performance in this assay has not been determined.

The following recommendations for handling and storing blood samples are furnished by the Clinical and Laboratory Standards Institute (CLSI, formerly NCCLS):[8]

- Collect all blood samples observing universal precautions for venipuncture.
- Allow samples to clot adequately before centrifugation.
- Keep tubes stoppered and upright at all times.
- Do not use samples that have been stored at room temperature for longer than 8 hours.
- Tightly cap and refrigerate specimens at 2 to 8°C if the assay is not completed within 8 hours.
- Freeze samples at or below -20°C if the sample is not assayed within 48 hours.
- Freeze samples only once and mix thoroughly after thawing.

Before placing samples on the system, ensure that samples have the following characteristics:

- Samples are free of fibrin or other particulate matter. Remove particulates by centrifugation at 1000 x g for 15 to 20 minutes.
- Samples are free of bubbles.

Reagents

Store the reagents upright at 2–8°C.

Mix all primary reagent packs by hand before loading them onto the system. Visually inspect the bottom of the reagent pack to ensure that all particles are dispersed and resuspended. For detailed information about preparing the reagents for use, refer to the Operator's Guide.

Reagent Pack	Reagent	Volume	Ingredients	Storage	Stability
ADVIA Centaur BR ReadyPack primary reagent pack	Lite Reagent	2.5 mL/ reagent pack	monoclonal mouse anti-CA 27.29 antibody (~1.2 µg/mL) labeled with acridinium ester in buffered saline with preservatives	2–8°C	until the expiration date on the pack label. For onboard stability, refer to *Onboard Stability and Calibration Interval.*
	Solid Phase	12.5 mL/ reagent pack	human CA 27.29 (~0.72 U/mL) covalently coupled to paramagnetic particles in buffer with preservatives	2–8°C	until the expiration date on the pack label. For onboard stability, refer to *Onboard Stability and Calibration Interval.*
ADVIA Centaur BR PRE ReadyPack ancillary reagent pack	Pretreatment Reagent	10.0 mL/ reagent pack	sodium hydroxide (0.24N)	2–8°C	until the expiration date on the pack label or 28 consecutive days after accessing the ancillary reagent pack
ADVIA Centaur M-DIL 1 ReadyPack ancillary reagent pack	Multi-Diluent 1	25.0 mL/ reagent pack	equine serum with sodium azide (0.1%) and preservatives	2–8°C	until the expiration date on the pack label or 28 consecutive days after accessing the ancillary reagent pack

R36/38 **Irritant!** Irritating to eyes and skin. In case of contact with eyes, rinse immediately with plenty of water and seek medical advice. Avoid contact with skin and eyes.
S26
S24/25 **Contains:** sodium hydroxide; Pretreatment Reagent

CAUTION! POTENTIAL BIOHAZARD: Contains human source material. While each human serum or plasma donor unit used in the manufacture of this product was tested by FDA-approved methods and found nonreactive for hepatitis B surface antigen (HBsAg), antibody to hepatitis C (HCV), and antibody to HIV-1/2, all products manufactured using human source material should be handled as potentially infectious. Because no test method can offer complete assurance that hepatitis B or C viruses, HIV, or other infectious agents are absent, these products should be handled according to established good laboratory practices.[9-11]

CAUTION: This device contains material of animal origin and should be handled as a potential carrier and transmitter of disease.

NOTE: Sodium azide can react with copper and lead plumbing to form explosive metal azides. On disposal, flush reagents with a large volume of water to prevent the buildup of azides, if disposal into a drain is in compliance with federal, state, and local requirements.

For *In Vitro* Diagnostic Use.

Loading Reagents

Ensure that the system has sufficient primary and ancillary reagent packs. For detailed information about preparing the system, refer to the system operating instructions or to the online help system.

Mix all primary reagent packs by hand before loading them onto the system. Visually inspect the bottom of the reagent pack to ensure that all particles are dispersed and resuspended. For detailed information about preparing the reagents for use, refer to the Operator's Guide.

Load the primary reagent packs in the primary reagent area. You can use the arrows on the end label as a placement guide. However, left, center, and right placement of the primary reagent packs is not required, because the ADVIA Centaur CP System has only one reagent probe. The system automatically mixes the primary reagent packs to maintain homogeneous suspension of the reagents. Load the BR Pretreatment Reagent ReadyPack reagent pack in the ancillary reagent area. For detailed information about loading reagents, refer to the system operating instructions or to the online help system.

If automatic dilution of a sample is required, load ADVIA Centaur Multi-Diluent 1 in the ancillary reagent area.

Onboard Stability and Calibration Interval

Onboard Stability	Calibration Interval
28 days	7 days

The ADVIA Centaur CP BR assay requires a two-point calibration:

- when changing lot numbers of primary reagent packs
- when replacing system components
- when quality control results are repeatedly out of range

NOTE:

- Discard the primary reagent packs at the end of the onboard stability interval.
- Do not use reagents beyond the expiration date.

Master Curve Calibration

The ADVIA Centaur CP BR assay requires a Master Curve calibration when using a new lot number of Lite Reagent and Solid Phase. For each new lot number of Lite Reagent and Solid Phase, use the barcode reader or keyboard to enter the Master Curve values on the system. The Master Curve card contains the Master Curve values. For detailed information about entering calibration values, refer to the system operating instructions or to the online help system.

Quality Control

For detailed information about entering quality control values, refer to the system operating instructions or to the online help system.

To monitor system performance and chart trends, as a minimum requirement, assay two levels of quality control material on each day that samples are analyzed. Assay quality control samples when performing a two-point calibration. Treat all quality control samples the same as patient samples.

Refer to the quality control product insert for the suggested Expected Values. If the quality control results do not fall within the Expected Values or within the laboratory's established values, do not report results. Take the following actions:

- Verify that the materials are not expired.

- Verify that required maintenance was performed.
- Verify that the assay was performed according to the instructions for use.
- Rerun the assay with fresh quality control samples.
- If necessary, contact your local technical support provider or distributor for assistance.

Sample Volume

This assay requires 25 µL of sample for a single determination. This volume does not include the unusable volume in the sample container or the additional volume required when performing duplicates or other tests on the same sample. Sample predilution is not required. Refer to *Dilutions* for information about samples with values above the assay range. For detailed information about determining the minimum required volume, refer to the system operating instructions or to the online help system.

Assay Procedure

For detailed procedural information, refer to the system operating instructions or to the online help system.

Procedural Notes

Calculations

For detailed information about how the system calculates results, refer to the system operating instructions or to the online help system.

The system reports serum CA 27.29 results in U/mL.

Dilutions

- Dilute and retest serum samples with CA 27.29 levels greater than 450 U/mL to obtain accurate results.
- The system can automatically dilute serum samples, or you can prepare dilutions manually.
- For automatic dilutions, ensure that ADVIA Centaur Multi-Diluent 1 is loaded and set the system parameters as follows:

  Dilution point: ≤ 450 U/mL

  Dilution factor: 10, 20

  For detailed information about automatic dilutions, refer to the system operating instructions or to the online help system.
- Manually dilute the patient samples when patient results exceed the linearity of the assay using automatic dilution, or when laboratory protocol requires manual dilution.
- Use Multi-Diluent 1 to manually dilute patient samples, and then load the diluted sample in the sample rack, replacing the undiluted sample.
- Ensure that results are mathematically corrected for dilution. If a dilution factor is entered when scheduling the test, the system automatically calculates the result.

Disposal

Dispose of hazardous and biologically contaminated materials according to the practices of your institution. Discard all materials in a safe and acceptable manner and in compliance with all federal, state, and local requirements.

Limitations

NOTE: Do not interpret levels of CA 27.29 as absolute evidence of the presence or the absence of malignant disease. Before treatment, patients with confirmed breast carcinoma frequently have levels of CA 27.29 within the range observed in healthy individuals. Additionally, elevated levels of CA 27.29 can be observed in patients with nonmalignant diseases. Measurements of CA 27.29 should always be used in conjunction with other diagnostic procedures, including information from the patient's clinical evaluation.

WARNING: Do not use the ADVIA Centaur CP BR assay as a screening test or for diagnosis. Normal levels of CA 27.29 do not always preclude the presence of disease.

Heterophilic antibodies in human serum can react with reagent immunoglobulins, interfering with *in vitro* immunoassays.[12] Patients routinely exposed to animals or to animal serum products can be prone to this interference and anomalous values may be observed. Additional information may be required.

Exercise caution when interpreting ADVIA Centaur CP BR levels during pregnancy.[13]

The concentration of CA 27.29 in a given specimen determined with assays from different manufacturers can vary because of differences in assay methods, calibration, and reagent specificity. CA 27.29 determined with different manufacturers' assays will vary depending on the method of standardization and antibody specificity. Therefore, it is important to use assay-specific values to evaluate quality control results.

Endogenous interferents, such as high concentrations of hemoglobin, lipids, bilirubin and total protein, had no effect beyond the limits of random within-run variations. Mean recoveries were within 5% of the control level for all interferents tested.

Substance	Amount	% Recovery
Conjugated Bilirubin	20 mg/dL	99.6
Unconjugated Bilirubin	20 mg/dL	100.0
Triglycerides	3000 mg/dL	101.6
Hemoglobin	500 mg/dL	104.3
Total Protein	12 g/dL	100.0

Endogenous interfering substances were determined with the ADVIA Centaur BR assay.

Expected Results

The analytical performance of the ACS:180® BR assay was evaluated using a panel of 103 samples from patients with clinically diagnosed breast cancer. All samples were analyzed using the ACS:180 BR assay and another commercially available method that also measures CA 27.29. A correlation of the two assays was performed by linear regression analysis. The correlation coefficient was 0.96 with a slope of 1.045 and an intercept of 7.6.

During the clinical trial to establish the performance characteristics of the ACS:180 BR assay, serum samples from 314 apparently healthy female blood donors were tested. The women were over the age of 18 years and approximately 50% were post-menopausal. The Upper Limit of Normal (ULN) for this group, defined as the 99th percentile of the observed results, was established at 38.6 U/mL. Additional data were generated on a panel of samples from patients with various diseases and conditions, as shown in the following table. These data indicate the percentage of samples with levels of CA 27.29 above the ULN.

Sample Category	N	% of Patients with levels of CA 27.29 > 38.6 U/mL (ULN)
Normals	314	1
Metastatic breast cancer	97	81
Benign breast disease	129	3
Malignant disease		
Stomach	29	7
Colon	43	26
Lung	47	43
Pancreas	45	47
Ovarian	50	56
Liver	20	60
Prostate	34	18
Uterus	30	13
Pregnancy	49	2
Lactating women	37	11
Cirrhosis	25	24
Endometriosis	24	8
Chronic Hepatitis	48	10
Ovarian Cyst	50	6
Renal Impairment	20	15

As with all *in vitro* diagnostic assays, each laboratory should determine its own reference range(s) for the diagnostic evaluation of patient results.[14] The expected results were determined with the ACS:180 BR assay. The results were confirmed for the ADVIA Centaur CP BR assay. Refer to *Method Comparison*.

Clinical Trial Results

Monitoring Stage II or Stage III Breast Cancer Patients for Disease Recurrence

This ACS:180 BR assay clinical trial was comprised of specimens from 162 patients who were enrolled in a multi-center prospective study. These patients were previously treated for Stage II or Stage III breast cancer and had no evidence of disease (NED) at the time of study entry (at least 1 year post-surgery). Patients were monitored over the length of the study (18 to 24 months) by determining the CA 27.29 levels in serial blood specimens drawn at each visit with their clinician. All patients included in the ACS:180 BR clinical study were lymph node positive at time of surgery, and had at least three serial bleeds after study enrollment. Specimen testing was performed in parallel using the ACS:180 BR assay and another commercially available method that measures CA 27.29.

Sensitivity, specificity, and predictive values (PPV and NPV) of the ACS:180 BR assay as an aid in monitoring for the recurrence of breast cancer were calculated against disease recurrence as defined by clinical outcome. Of the 162 patients included in the study, 25 showed clinical evidence of disease recurrence. Breast cancer recurrence was established using clinical symptoms, and/or general or specific imaging techniques; for example, x-ray, mammogram, magnetic resonance imaging, computerized tomography, ultrasound, bone scan, or liver scan. The utility of the ACS:180 BR assay as an aid for the detection of breast cancer recurrence was analyzed under two scenarios:

- Using any single ACS:180 BR result greater than the ULN (38.6 U/mL) prior to disease recurrence.
- Using two consecutive ACS:180 BR results greater than the ULN (38.6 U/mL) prior to disease recurrence.

Assay results above the ULN must have occurred prior to, or at the same time as, the clinical diagnosis of recurrence in order to be considered predictive of disease recurrence. Statistical analyses showed that the ACS:180 BR assay performance at the testing sites was not statistically different, so the combined performance data from all patients are shown in the following table:

Assay Concordance with Disease Recurrence

Performance Parameter	Estimate* Using One Elevated Value	Estimate* Using Two Consecutive Elevated Values
Sensitivity	60% (39 – 79)	48% (28 69)
Specificity	93% (87 – 96)	98% (94 – 100)
PPV	60% (39 79)	80% (52 – 96)
NPV	93% (87 - 96)	91% (85 95)

* Numbers in parentheses represent the 95% confidence intervals.

In this clinical trial, results from the commercially available comparator assay, using one elevated value, showed that sensitivity ranged from 58% to 62% at the two sites, specificity ranged from 53% to 97%, PPV ranged from 23% to 73%, and NPV ranged from 84% to 94%. Using two elevated values, the sensitivity ranged from 38% to 42%, specificity ranged from 86% to 100%, PPV ranged from 42% to 100%, and NPV ranged from 86% to 92%.

The positive and negative predictive values vary depending on the prevalence of disease recurrence. The following table contains the ACS:180 BR expected positive and negative predictive values for a range of realistic prevalences for the recurrence of disease. These expected values were based on the combined assay performance data presented in the preceeding table and the mean prevalence rate of disease recurrence of 15% at the two testing sites.

Expected Predictive Values at Various Prevalences of Disease Recurrence Using One or Two Consecutive Assay Values Greater Than the Upper Limit of Normal

	Using One Elevated Value		Using Two Consecutive Elevated Values	
Prevalence of Disease Recurrence	PPV	NPV	PPV	NPV
10%	49%	95%	73%	94%
15%	60%	93%	81%	91%
20%	68%	90%	86%	88%
25%	74%	87%	89%	85%
30%	79%	84%	91%	81%

Management of Patients with Metastatic Disease for Progression or Regression of Disease in Response to Therapy

This clinical trial was a multi-center prospective study of 97 breast cancer patients with metastatic disease. All patients received treatment during the study. Patients were enrolled at six sites and all ACS:180 BR testing was performed at three laboratories not associated with the patient enrollment sites.

The clinical sensitivity and specificity of the ACS:180 BR assay in relation to changing disease status in metastatic breast cancer patients were determined using a 20% increase in assay levels as an indication of progressing disease. In addition, the positive predictive value, the percentage of patients with increases above 20% who had clinically progressing disease was calculated. Calculations were based on the 79 patients who had assay levels above the ULN. Patients were considered to have completed the trial at the time of diagnosis of progressing or regressing disease. Patients with stable disease were followed anywhere from 2 to 7 months. The following tables summarize the study results:

Concordance of Changes in Clinical Status and Changes in CA 27.29 Antigen Level among 79 Patients

	Disease Status	
Change in Assay Levels	Progression (number of patients)	Regression/Stable (number of patients)
≥ 20% Increase	33	10
< 20% Increase	12	24

ACS:180 BR Assay Concordance with Clinical Diagnosis in Metastatic Breast Cancer Patients

	Estimate*
Sensitivity to Change in Disease Status	73% (58 – 85%)
Specificity to Change in Disease Status	71% (53 – 85%)
Positive Predictive Value to Change in Disease Status	77% (61 – 88%)
Negative Predictive Value to Change in Disease Status	67% (49 – 81%)

* Values in parentheses represent the 95% confidence intervals.

The positive and negative predictive values (PPV and NPV) to change in disease status depend on the underlying prevalence of disease progression. The PPV and NPV values listed in the table above, were calculated using the prevalence of disease progression (57%) which was

observed in the clinical trial. The following table lists the positive and negative predictive values for other hypothetical prevalences of disease progression:

Prevalence of Disease Progession	PPV	NPV
25%	45.4%	88.8%
35%	57.3%	83.1%
45%	67.1%	76.4%
55%	75.3%	68.4%
65%	82.2%	58.8%
75%	88.2%	46.9%

Performance Characteristics

Specificity

There are no known cross-reactants for CA 27.29. The potential interference of chemotherapeutic agents, therapeutic drugs, and related tumor marker antigens was tested by adding these substances to five serum pools containing CA 27.29 ranging from 5.1 to 445.4 U/mL. The therapeutic drugs were spiked into patient serum pools and then diluted to a final concentration 10 times (or less depending on the solubility of the drug) the peak concentration normally found in serum immediately after infusion. The level of CA 27.29 in each of these pools was then determined and normalized to the level without the respective drugs or antigens.

Substance	Mean % Recovery	Substance	Mean % Recovery
Acetaminophen (10X)	96.3	Granisetron HCl (10X)	99.9
Cimetidine (10X)	100.9	Lorazepam (10X)	98.0
Ciprofloxacin (10X)	100.1	Megestrol acetate (5X)	105.2
Cyclophosphamide (1X)	96.2	Methotrexate (10X)	105.8
Codeine (10X)	96.9	Morphine (10X)	95.6
Dexamethasone (10X)	100.2	Ondansetron (10X)	93.3
Diphenhydramine HCl (10X)	101.8	Paclitaxel (2X)	101.7
Doxorubicin (10X)	95.9	Prochlorperazine (10X)	96.4
Etoposide (2X)	99.5	Tamoxifen (10X)	96.6
5-Fluorouracil (10X)	104.2	Vinorelbine tartrate (10X)	104.9

Antigen	Amount	Mean % Recovery
Carcinoembryonic antigen (CEA)	30 ng/mL	103.8
Ovarian Cancer antigen (CA 125)	300 U/mL	105.9
GI Cancer antigen (CA 19-9)	300 U/mL	103.6

Interference was determined with the ACS:180 BR assay according to CLSI Document EP7-A2.[15]

Analytical Sensitivity and Assay Range

The ADVIA Centaur CP BR assay measures CA 27.29 concentrations up to 450 U/mL with a minimum detectable concentration (analytical sensitivity) of 3.5 U/mL. Analytical sensitivity is defined as the concentration of CA 27.29 that corresponds to the RLUs that are two standard deviations less than the mean RLUs of replicate determinations of the BR zero standard. This response is an estimate of the minimum detectable concentration with 95% confidence.

Method Comparison

For 598 samples in the range of 4.31 to 448.9 U/mL, the relationship of the ADVIA Centaur CP BR assay to the ADVIA Centaur BR assay is described by the following equation:

ADVIA Centaur CP BR = 0.986 (ADVIA Centaur BR) + 0.87 U/mL

Correlation coefficient (r) = 0.993

For 143 samples in the range of 4.42 to 342.6 U/mL, the relationship of the ADVIA Centaur CP BR assay to the ACS:180 BR assay is described by the following equation:

ADVIA Centaur CP BR = 1.03 (ACS:180 BR) – 3.31 U/mL

Correlation coefficient (r) = 0.995

Dilution Recovery

Five human serum samples in the range of 288.7 to 407.5 U/mL of CA 27.29 were diluted 1:2, 1:4, 1:8, and 1:16 with Multi-Diluent 1 and assayed for recovery and parallelism. The recoveries ranged from 78.4% to 125.8% with a mean of 107.5%.

Sample	Dilution	Observed (U/mL)	Expected (U/mL)	Recovery %
1	—	367.9		
	1:2	196.8	184.0	107.0
	1:4	99.27	91.98	107.9
	1:8	54.20	45.99	117.9
	1:16	24.67	22.99	107.3
	Mean			110.0
2	—	288.7		
	1:2	137.2	144.3	95.0
	1:4	74.11	72.17	102.7
	1:8	37.82	36.08	104.8
	1:16	14.14	18.04	78.4
	Mean			95.2
3		407.5		
	1:2	225.2	203.8	110.5
	1:4	110.2	101.9	108.1
	1:8	60.75	50.94	119.3
	1:16	25.10	25.47	98.6
	Mean			109.1
4	—	394.1		
	1:2	221.0	197.1	112.1
	1:4	110.5	98.53	112.2
	1:8	61.98	49.26	125.8
	1:16	26.98	24.63	109.5
	Mean			114.9
5	—	364.6		
	1:2	195.7	182.3	107.3
	1:4	98.50	91.16	108.1
	1:8	54.94	45.58	120.5
	1:16	22.30	22.79	97.8
	Mean			108.4
Mean				**107.5**

Spiking Recovery

Varying amounts of CA 27.29 were added to six serum samples with endogenous levels of CA 27.29 ranging from 11.89 to 31.36 U/mL. The amount of CA 27.29 that was added varied from 29.94 to 460.29 U/mL. When compared to the expected value, the measured (recovered) values of CA 27.29 averaged 98.6% with a range of 87.5 to 128.9%.

Sample	Amount Added (U/mL)	Observed (U/mL)	Recovery %
1		11.89	
	29.94	40.54	95.7
	56.41	68.06	99.6
	90.91	99.29	96.1
	154.6	161.7	96.9
	299.9	314.4	100.9
	Mean		97.8
2	—	11.93	
	29.94	40.48	95.4
	56.41	66.11	96.0
	90.91	104.16	101.5
	154.6	165.4	99.3
	299.9	315.2	101.2
	Mean		98.7
3	—	22.06	
	29.94	52.35	101.2
	56.41	79.87	102.5
	90.91	113.71	100.8
	154.6	176.1	99.7
	299.9	333.4	103.8
	Mean		101.6

Sample	Amount Added (U/mL)	Observed (U/mL)	Recovery %
4		19.19	
	29.94	45.72	88.6
	56.41	91.92	128.9
	90.91	107.26	96.9
	154.6	170.1	97.6
	299.9	315.2	98.7
	Mean		102.2
5	—	31.36	
	29.94	58.33	90.1
	56.41	84.80	94.7
	90.91	120.12	97.6
	154.6	179.8	96.0
	299.9	328.8	99.2
	Mean		95.5
6	—	12.79	
	29.94	38.99	87.5
	56.41	69.03	99.7
	90.91	100.99	97.0
	154.58	162.0	96.5
	299.9	308.4	98.6
	460.3	458.1	96.7
	Mean		96.0
Mean			**98.6**

Spiking Recovery testing was previously determined on the ACS:180 BR assay.

Precision

Four samples were assayed 2 times per day, in 20 runs, over a 10-day period on 2 systems (n = 160 for each sample). The following results were obtained:

Mean (U/mL)	Within-run % CV	Run-to-run % CV	Total % CV
31.45	4.0	6.9	8.0
42.69	3.8	5.8	6.9
99.6	1.8	4.0	4.4
126.9	2.4	2.3	3.3

Traceability of Standardization

The ADVIA Centaur CP BR assay is traceable to an internal standard manufactured using highly purified CA 27.29.

Evaluating Results

The following is recommended when you observe poor reproducibility of CA 27.29 values at low levels or if you are not satisfied with assay performance:

- Ensure that the assay reagent and calibrator lot numbers and expiration dates match those entered in the system.
- Ensure that the calibrators, quality control materials, and assay reagents were prepared according to the recommended procedures.
- Ensure that the recommended sample collection and handling procedures were followed.
- Ensure that the recommended system cleaning procedures were followed.
- Visually check the probe and tubing for obstructions, leaks, and deformities such as pinched or crimped tubing.
- Take further corrective action following established laboratory procedures.
- Calibrate the system using new assay reagents, calibrators, and quality control samples.
- If necessary, contact your local technical support provider or distributor for assistance.

References

1. Breast Cancer Facts and Figures, American Cancer Society, 1995.
2. Smart CR, Byrne C, Smith RA, et al. Twenty year follow-up of the breast cancers diagnosed during the breast cancer detection demonstration project. CA, a Cancer Journal for Clinicians, 1997, 47:134-149.
3. Reddish MA, Helbrecht N, Almeida AF, et al. Epitope mapping of MAb B27.29 within the peptide core for the malignant breast carcinoma-associated mucin antigen coded for by the human MUC-1 gene. J Tumor Marker Oncol. 1992, 7:19-27.
4. Abbate I, Correale M, Musci MD, and Dragone D. Monoclonal antibody B27.29 against mucinous breast cancer associated antigen CA 27.29 in breast cancer. Br Cancer Res and Treatment 1991, 19(2):123.
5. Dnistrain AM, Schwartz MK, Greenberg EJ, Smith CA, Schwartz DC, Maimonis P. Evaluation of a breast cancer antigen assayed on the Ciba Corning ACS:180 Automated Chemiluminescence System. 1996, J Tumor Marker Oncol. 11(3):5-10.
6. Bon GG, von Mensdorff-Pouilly S, Kenemans P, van Kamp GJ, et al. Clinical and technical evaluation of ACS BR serum assay of MUC-1 gene-derived glycoprotein in breast cancer, and comparison with CA 15-3 assays. Clin Chem, 1997, 43(4):585-593.
7. Chan DW, Beveridge RA, Muss H, et al. Use of Truquant BR Radioimmunoassay for early detection of breast cancer recurrence in patients with Stage II and Stage III disease. J Clin Oncol 1997, 15(6):2322-2328.
8. Clinical and Laboratory Standards Institute (formerly NCCLS). *Procedures for the Handling and Processing of Blood Specimens; Approved Guideline - Third Edition.* Wayne, PA: Clinical and Laboratory Standards Institute; 2004. NCCLS Document H18-A3.
9. Centers for Disease Control. 1988. Update: Universal precautions for prevention of transmission of human immunodeficiency virus, hepatitis B virus and other bloodborne pathogens in healthcare settings. MMWR, 37:377–82, 387–8.
10. Clinical and Laboratory Standards Institute (formerly NCCLS). *Protection of Laboratory Workers From Occupationally Acquired Infections; Approved Guideline - Third Edition.* Wayne, PA: Clinical and Laboratory Standards Institute; 2005. NCCLS Document M29-A3.
11. Federal Occupational Safety and Health Administration, Bloodborne Pathogens Standard, 29 CFR 1910.1030.
12. Boscato LM, Stuart MC. Heterophilic antibodies: a problem for all immunoassays. Clin Chem 1988;34:27–33.
13. Bombardieri E, Pizzichetta M, Veronesi P, et al. CA 15-3 determination in patients with breast cancer: clinical utility for the detection of distant metastases. Eur J Cancer 1993;29A(1):144–6.
14. Clinical and Laboratory Standards Institute (formerly NCCLS). *How to Define and Determine Reference Intervals in the Clinical Laboratory; Approved Guideline - Second Edition.* Wayne, PA: Clinical and Laboratory Standards Institute; 2000. NCCLS Document C28-A2.
15. Clinical and Laboratory Standards Institute (formerly NCCLS). *Interference Testing in Clinical Chemistry; Approved Guideline - Second Edition.* Wayne, PA: Clinical and Laboratory Standards Institute; 2005. NCCLS document EP7-A2.

ADVIA Centaur, ReadyPack, and ACS:180 are trademarks of Siemens Medical Solutions Diagnostics.

© 2007 Siemens Medical Solutions Diagnostics. All rights reserved.

US Pats 4,745,181; 4,918,192; 4,960,716; 5,110,932; 5,609,822; 5,788,928

Origin: US

Siemens Medical Solutions Diagnostics
Tarrytown, NY 10591-5097 USA

EC REP Siemens Medical Solutions Diagnostics
Europe Limited
Chapel Lane, Swords, Co. Dublin, Ireland

Siemens Medical Solutions
Diagnostics Pty Ltd
ABN 65 007 436 651
885 Mountain Highway
Bayswater Victoria 3153
Australia

Siemens Medical Solutions Diagnostics
3-20-14 Higashi-Gotanda, Shinagawa
Tokyo, 141-8641, Japan

DEPARTMENT OF HEALTH AND HUMAN SERVICES

Public Health Service
Food and Drug Administration
2098 Gaither Road
Rockville, Maryland 20850

August 30, 2007

Carol Bianca
Siemens Medical Solutions Diagnostics
511 Benedict Ave.
Tarrytown, NY 10591-5097 US

Re: k971418/A007
Received: August 10, 2007

Categorization Notification

Regulations codified at 42 CFR 493.17 et. seq., implementing the Clinical Laboratory Improvement Amendments of 1988, require the Secretary to provide for the categorization of specific clinical laboratory test systems by the level of complexity. Based upon these regulations, the following commercially marketed test system or assay for the analyte is categorized below:

Test System/Analyte (s) : (SEE ATTACHMENT)

This complexity categorization is effective as of the date of this notification and will be reported on FDA's home page http://www.fda.gov/cdrh/clia. This categorization information may be provided to the user of the commercially marketed test system or assay as specified for the analyte indicated. It will also be announced in a Federal Register Notice, which will provide opportunity for comment on the decision. FDA reserves the right to reevaluate and recategorize this test based upon the comments received in response to the Federal Register Notice.

If you change the test system name or your company's name or if a distributor's name replaces your name, you must request another categorization by sending in the revised labeling along with a letter to FDA referencing the document number above.

If you have any questions regarding this complexity categorization, please contact Courtney Harper at 240-276-0694.

Sincerely yours,

Steven Gutman

Steven I. Gutman, M.D., M.B.A.
Director
Office of *In Vitro* Diagnostic Device
Evaluation and Safety
Center for Devices and Radiological Health

ATTACHMENT

Document Number : k971418/A007

Test System : ADVIA Centaur CP
Analyte : Carcinoembryonic Antigen (CEA)
Complexity : MODERATE

CLIA Routing Slip

Document No : k971418/A007

Division: DCTD
Branch: CTXB

Applicant: Siemens Medical Solutions Diagnostics
Trade Name: Chiron diagnostics automated chemiluminescence system (asc) centaur analyzer

DMC Date Received: August 10, 2007
Division Date Received: August 10, 2007

Categorization Information

CLIA Reviewer: Rufina Carlos [RXC]
Date Review Completed: August 29, 2007

Date Branch Concurred: August 29, 2007
Date Coordinator Concurred:
Effective Date:

AUG 3 0 2007

Test Systems/Analytes/Grading

(See Attachment)

ATTACHMENT

Document Number : k971418/A007

Test System : ADVIA Centaur CP
Analyte : Carcinoembryonic Antigen (CEA)
Complexity : MODERATE [11]
Knowledge [2]; Training and Experience [2]; Reagents Preparation [1];
Operational Steps [1]; Quality Control [1];
Troubleshooting and Maintenance [2]; Interpretation and Judgment [2]
Rationale : CHEM-001

DEPARTMENT OF HEALTH & HUMAN SERVICES Public Health Service
Food and Drug Administration

Memorandum

Date: 8/10/07

From: DMC (HFZ-401)

Subject: Premarket Notification Number(s): K971418/A7

To: Division Director: IM ~~CH/DCTD~~ DIHD

The attached information has been received by the 510(k) DMC on the above referenced 510(k) submission(s). Since a final decision has been rendered, this record is officially closed.

Please review the attached document and return it to the DMC, with one of the statements checked below.

_____Information does not change the status of the 510(k); no other action required by the DMC; please add to image file. (Prepare K-25) THIS DOES NOT APPLY TO TRANSFER OF OWNERSHIP. PLEASE BRING ANY TRANSFER OF OWNERSHIP TO POS.

_____Additional information requires a new 510(k); however, the information submitted is incomplete; (Noitify company to submit a new 510(k);[Prepare the K30 Letter on the LAN]

mine ✓ No response necessary (e.g., hard copy of fax for the truthful and accuracy statement, 510(k) statement, change of address, phone number, or fax number).

CLIA CATEGORIZATION refers to laboratory test system devices reviewed by the Division of Clinical Laboratory Devices (HFZ-440

✓ Information requires a **CLIA CATEGORIZATION**; the complexity may remain the same as the original 510(k) or may change as a result of the additional information (Prepare a CAT letter)

_____Additional information requires a **CLIA CATEGORIZATION**; however, the information submitted is incomplete; (call or fax firm)

_____No response necessary

This information should be returned to the DMC within 10 working days from the date of this memorandum.

Reviewed by: RCarlos

Date: 8/29/07

5

SIEMENS

August 22, 2007

Mr. James Callaghan, OIVD
Document Mail Center
Center for Devices and Radiological Health
U.S. Food and Drug Administratiion
9200 Corporate Blvd. (HFZ-401)
Rockville, MD 20850

Dear Mr. Callaghan,

Re: FDA Phone Request of 22Aug07 for Official Correspondent of CLIA Categorization ADVIA Centaur CP requests

This letter is to inform the FDA that I am the official contact for the requests for CLIA categorization submitted to FDA by Seimens Medical Solutions Diagnostics starting from July 9, 2007.

The requests submitted are for previously cleared ADVIA Centaur Assays that have been applied to the ADVIA Centaur CP, a new member of the ADVIA Centaur analyzer family, in accordance with the Reagent Replacement and Instrument Family Policy.

I am sorry for the inconvenience this has created for the FDA.

Official Correspondent:
Carol A. Bianca
Senior Manager, Regulatory Affairs
Siemens Medical Solutions Diagnostics
511 Benedict Avenue
Tarrytown, NY 10591
Phone: 914 524-2531
Fax: 914 524-2500
Email: carol.bianca@siemens.com

Thank You and Best Regards

Carol A Bianca

Carol A. Bianca
Senior Manager, Regulatory Affairs
Siemens Medical Solutions Diagnostics

K971418/A7

August 3, 2007

Document Mail Center
Center for Devices and Radiological Health
U.S Food and Drug Administration
9200 Corporate Blvd. (HFZ-401)
Rockville, MD 20850

Re: 510(k) For CLIA categorization only.

IVD assays requiring 510(k) clearance currently on the ADVIA Centaur were migrated to the ADVIA Centaur CP instrument platform following the Replacement Reagent and Instrument Family Policy Guidance Document. Siemens Medical Solutions Diagnostics is requesting CLIA categorization for the ADVIA Centaur CP assay for Carcinoembryonic Antigen (CEA) that migrated from the ADVIA Centaur. Attached are the two hard copies of the Package Inserts (IFU). The 510(k) clearance is K971418.

Sincerely, Carol Bianca

Carol Bianca
Siemens Medical Solutions Diagnostics
Senior Manager, Regulatory Affairs
Phone (914) 524-2531
FAX (914) 524-2500
e-mail: carol.bianca@siemens.com

139

CEA

CE

Assay Summary

Sample Type	***Serum***
Sample Volume	***50 µL***
Calibrator	***D***
Sensitivity and Assay Range	***0.5 – 100 ng/mL (µg/L)***

Contents

REF	Contents	Number of Tests
09788458 (110762)	5 ReadyPack® primary reagent packs containing ADVIA Centaur® CEA Lite Reagent and Solid Phase ADVIA Centaur and ADVIA Centaur CP CEA Master Curve cards	500
or		
00937450 (110761)	1 ReadyPack primary reagent pack containing ADVIA Centaur CEA Lite Reagent and Solid Phase ADVIA Centaur and ADVIA Centaur CP CEA Master Curve cards	100

For a definition of symbols used in product labeling, please refer to the *Operator's Guide*.

Intended Use

For *in vitro* diagnostic use in the quantitative measurement of carcinoembryonic antigen (CEA) in serum to aid in the management of cancer patients in whom changing concentrations of CEA are observed using the ADVIA Centaur CP System.

WARNING: The concentration of CEA in a given specimen, as determined by assays from different manufacturers, can vary due to differences in assay methods and reagent specificity. The results reported by the laboratory to the physician must include the identity of the CEA assay used. Values obtained with different assay methods cannot be used interchangeably. If, in the course of monitoring a patient, the assay method used for determining serial CEA levels is changed, the laboratory must perform additional serial testing to confirm baseline values.

United States federal law restricts this device to sale and distribution by or on the order of a physician, or to a clinical laboratory; and use is restricted to, by, or on the order of a physician.

Materials Required But Not Provided

REF	Description	Contents
00133564 (672183)	Calibrator D	6 vials of low calibrator CAL L 6 vials of high calibrator CAL H
or		
04956492 (672173)	Calibrator D	2 vials of low calibrator CAL L 2 vials of high calibrator CAL H

Optional Reagents

REF	Description	Contents
07584944 (110322)	ADVIA Centaur CEA Diluent DIL	2 ReadyPack ancillary reagent packs containing 5 mL/pack
01989969 (672255)	CEA Diluent DIL	10 mL/vial
07642456 (986000)	Ligand Plus 1, 2, 3 quality control material	5 x 5 mL CONTROL 1 5 x 5 mL CONTROL 2 5 x 5 mL CONTROL 3
07377973 (986400)	Ligand Plus 1, 2, 3 barcode labels	60/level
03835942 (976700)	Tumor Marker Plus 1, 2 quality control material	3 x 2 mL CONTROL 1 3 x 2 mL CONTROL 2
09500144 (114925)	Tumor Marker Plus 1, 2 barcode labels	60/level
02444664 (672427)	CEA Master Curve Material	6 x 1 mL

Summary and Explanation of the Test

Carcinoembryonic antigen is a glycoprotein normally found in embryonic entodermal epithelium. In the mid 1960s, Gold and Freedman isolated CEA from extracts of malignant tissue.[1,2] CEA belongs to a group of tumor markers referred to as oncofetal proteins. Increased serum CEA levels have been detected in persons with primary colorectal cancer[1,2] and in patients with other malignancies including gastrointestinal tract, breast, lung, ovarian, prostatic, liver, and pancreatic cancers.[1-5] Elevated serum CEA levels have also been detected in patients with nonmalignant disease, especially patients who are older or who are smokers.[5,6] CEA levels are not useful in screening the general population for undetected cancers. However, CEA levels provide important information about patient prognosis, recurrence of tumors after surgical removal, and effectiveness of therapy.[1-6]

Serial CEA levels are useful in monitoring the course of disease. CEA levels generally fall to normal or near normal levels within 1 to 4 months after surgical removal of cancerous tissue. A rise in CEA levels may be the first indication of recurrence, and may precede physical signs and symptoms.[2,6,7] Serial CEA levels are also useful in assessing the effectiveness of chemotherapy or radiation treatment. A sustained rise in CEA levels can indicate ineffective therapy or possible metastasis.[1-5, 7]

CEA is a useful tool for monitoring and managing cancer therapy, and provides the clinician with additional information about patient prognosis.

Assay Principle

The ADVIA Centaur CP CEA assay is a two-site sandwich immunoassay using direct chemiluminometric technology, which uses constant amounts of two antibodies. The first antibody, in the Lite Reagent, is a purified polyclonal rabbit anti-CEA antibody labeled with acridinium ester. The second antibody, in the Solid Phase, is a monoclonal mouse anti-CEA antibody covalently coupled to paramagnetic particles.

The system automatically performs the following steps:

- dispenses 50 µL of sample into a cuvette
- dispenses 50 µL of Lite Reagent and 250 µL of Solid Phase and incubates for 9.7 minutes at 37°C
- separates, aspirates, and washes the cuvettes with Wash 1

- dispenses 300 µL each of Acid Reagent (R1) and Base Reagent (R2) to initiate the chemiluminescent reaction
- reports results according to the selected option, as described in the system operating instructions or in the online help system

Specimen Collection and Handling

Serum is the recommended sample type for this assay.

Plasma samples should not be used because their performance in this assay has not been determined.

The following recommendations for handling and storing blood samples are furnished by the Clinical and Laboratory Standards Institute (CLSI, formerly NCCLS):[8]

- Collect all blood samples observing universal precautions for venipuncture.
- Allow samples to clot adequately before centrifugation.
- Keep tubes stoppered and upright at all times.
- Do not use samples that have been stored at room temperature for longer than 8 hours.
- Tightly cap and refrigerate specimens at 2 to 8°C if the assay is not completed within 8 hours.
- Freeze samples at or below -20°C if the sample is not assayed within 48 hours.
- Freeze samples only once and mix thoroughly after thawing.

Before placing samples on the system ensure that:

- Samples are free of fibrin or other particulate matter. Remove particulates by centrifugation at 1000 x g for 15 to 20 minutes.
- Samples are free of bubbles.

Reagents

Store the reagents upright at 2–8°C.
Mix all primary reagent packs by hand before loading them onto the system. Visually inspect the bottom of the reagent pack to ensure that all particles are dispersed and resuspended. For detailed information about preparing the reagents for use, refer to the *Operator's Guide*.

Reagent Pack	Reagent	Volume	Ingredients	Storage	Stability
ADVIA Centaur CEA ReadyPack primary reagent pack	Lite Reagent	5.0 mL/ reagent pack	polyclonal rabbit anti-CEA antibody (~400 ng/mL) labeled with acridinium ester in phosphate buffered saline with protein stabilizers, sodium azide (0.12%), and preservatives	2–8°C	until the expiration date on the pack label. For onboard stability, refer to *Onboard Stability and Calibration Interval.*
	Solid Phase	25.0 mL/ reagent pack	monoclonal mouse anti-CEA antibody (~120 µg/mL) covalently coupled to paramagnetic particles in phosphate buffered saline with protein stabilizers, sodium azide (0.11%), and preservatives	2–8°C	until the expiration date on the pack label. For onboard stability, refer to *Onboard Stability and Calibration Interval.*
ADVIA Centaur CEA [DIL] ReadyPack ancillary reagent pack	CEA Diluent	5.0 mL/ reagent pack	bicine buffer, gelatin, and BSA with preservatives and sodium azide (0.1%)	2–8°C	until the expiration date on the pack label or 28 consecutive days after accessing the ancillary reagent pack

10

R22 S28 **Harmful!** Harmful if swallowed. After contact with skin, wash immediately with plenty of soap and water. **Contains:** sodium azide; Lite Reagent, Solid Phase

CAUTION: This device contains material of animal origin and should be handled as a potential carrier and transmitter of disease.

NOTE: Sodium azide can react with copper and lead plumbing to form explosive metal azides. On disposal, flush reagents with a large volume of water to prevent the buildup of azides, if disposal into drain is in compliance with federal, state, and local requirements.

For *In Vitro* Diagnostic Use.

Loading Reagents

Ensure that the system has sufficient primary and ancillary reagent packs. For detailed information about preparing the system, refer to the system operating instructions or to the online help system.

Use this procedure to mix ADVIA Centaur CEA primary reagent packs that are unpierced.

CAUTION: Do not use this procedure for pierced ADVIA Centaur CEA reagent packs. Discard pierced ADVIA Centaur CEA reagent packs that have been removed from the system.

1. Hold the reagent pack firmly with thumb on one side and fingers on the other side. Shake vigorously for 15 seconds, using a back and forth motion.

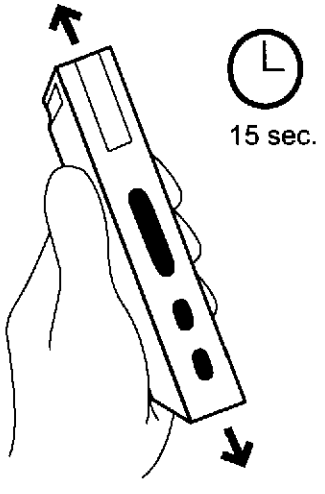

2. Hold the reagent pack firmly at one end, with film side up, and tap sharply on a bench top five times to reduce foaming caused by shaking.

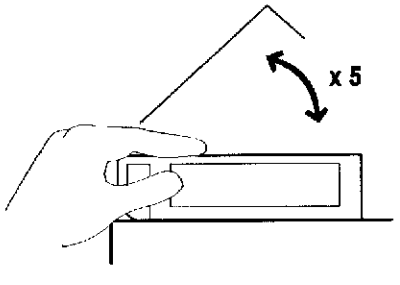

Visually inspect the bottom of the reagent pack to ensure that all particles are dispersed and resuspended.

Load the unpierced primary reagent packs in the primary reagent area. The arrows on the end label can be used as a placement guide. However, left, center, and right placement of the primary reagent packs is not required because there is only one reagent probe on the ADVIA Centaur CP System. The system automatically mixes the primary reagent packs to maintain homogeneous suspension of the reagents. For detailed information about loading reagents, refer to the system operating instructions or to the online help system.

If automatic dilution of a sample is required, load ADVIA Centaur CEA Diluent in the ancillary reagent area.

Onboard Stability and Calibration Interval

Onboard Stability	Calibration Interval
28 days	14 days

Additionally, the ADVIA Centaur CP CEA assay requires a two-point calibration:

- when changing lot numbers of primary reagent packs
- when replacing system components
- when quality control results are repeatedly out of range

NOTE:

- Discard the primary reagent packs at the end of the onboard stability interval.
- Do not use reagents beyond the expiration date.

Master Curve Calibration

The ADVIA Centaur CP CEA assay requires a Master Curve calibration when using a new lot number of Lite Reagent and Solid Phase. For each new lot number of Lite Reagent and Solid Phase, use the barcode reader or keyboard to enter the Master Curve values on the system. The Master Curve card contains the Master Curve values. For detailed information about entering calibration values, refer to the system operating instructions or to the online help system.

Quality Control

For detailed information about entering quality control values, refer to the system operating instructions or to the online help system.

To monitor system performance and chart trends, as a minimum requirement, two levels of quality control material should be assayed on each day that samples are analyzed. Quality control samples should also be assayed when performing a two-point calibration. Treat all quality control samples the same as patient samples.

For quality control of the ADVIA Centaur CP CEA assay, use Ligand Plus, Tumor Marker Plus, or an equivalent quality control material. Refer to the quality control product insert for the suggested Expected Values. If the quality control results do not fall within the Expected Values or within the laboratory's established values, do not report results. Take the following actions:

- Verify that the materials are not expired.
- Verify that required maintenance was performed.
- Verify that the assay was performed according to the instructions for use.
- Rerun the assay with fresh quality control samples.
- If necessary, contact your local technical support provider or distributor for assistance.

Sample Volume

This assay requires 50 µL of sample for a single determination. This volume does not include the unusable volume in the sample container or the additional volume required when performing duplicates or other tests on the same sample. For detailed information about determining the minimum required volume, refer to the system operating instructions or to the online help system.

NOTE: The sample volume required to perform onboard dilution differs from the sample volume required to perform a single determination. Refer to the following information for the sample volume required to perform onboard dilutions:

Dilution	Sample Volume (µL)
1:5	40
1:10, 1:50, 1:100	20

Assay Procedure

For detailed procedural information, refer to the system operating instructions or to the online help system.

Procedural Notes

Calculations

For detailed information about how the system calculates results, refer to the system operating instructions or to the online help system.

The system reports serum CEA results in ng/mL (common units) or µg/L (SI units), depending on the units defined when setting up the assay. The conversion formula is 1 ng/mL = 1 µg/L.

Dilutions

- Serum samples with CEA levels greater than 100 ng/mL (µg/L) must be diluted and retested to obtain accurate results.
- Patient samples can be automatically diluted by the system or prepared manually.
- For automatic dilutions, ensure that ADVIA Centaur CEA Diluent is loaded and set the system parameters as follows:

  Dilution point: ≤ 100 ng/mL (µg/L)

  Dilution factor: 5, 10, 50, 100

  For detailed information about automatic dilutions, refer to the system operating instructions or to the online help system.
- Manually dilute the patient samples when patient results exceed the linearity of the assay using automatic dilution, or when laboratory protocol requires manual dilution.
- Use CEA Diluent to manually dilute patient samples, and then load the diluted sample in the sample rack, replacing the undiluted sample.
- Ensure that results are mathematically corrected for dilution. If a dilution factor is entered when scheduling the test, the system automatically calculates the result.

High Dose Hook Effect

Patient samples with high CEA levels can cause a paradoxical decrease in the RLUs (high dose hook effect). In this assay, patient samples with CEA levels as high as 100,000 ng/mL (µg/L) will assay greater than 100 ng/mL (µg/L).

Disposal

Dispose of hazardous and biologically contaminated materials according to the practices of your institution. Discard all materials in a safe and acceptable manner and in compliance with all federal, state, and local requirements.

Limitations

NOTE: Do not interpret levels of CEA as absolute evidence of the presence or the absence of malignant disease. Measurements of CEA should always be used in conjunction with other diagnostic procedures, including information from the patient's clinical evaluation.

The concentration of CEA in a given specimen determined with assays from different manufacturers can vary due to differences in assay methods, calibration, and reagent specificity. CEA determined with different manufacturers' assays will vary depending on the method of standardization and antibody specificity.

WARNING: Do not use the ADVIA Centaur CP CEA immunoassay as a screening test for diagnosis.

Heterophilic antibodies in human serum can react with reagent immunoglobulins, interfering with *in vitro* immunoassays.[9] Patients routinely exposed to animals or to animal serum products can be prone to this interference and anomalous values may be observed. Additional information may be required for diagnosis.

Serum specimens that are . . .	Demonstrate ≤ 5% change in results up to . . .
hemolyzed	500 mg/dL of hemoglobin
lipemic	1000 mg/dL of triglycerides
icteric	20 mg/dL of bilirubin

Interference testing was determined according to CLSI Document EP7-A2.[10]

Expected Results

The expected results for the ACS:180® CEA assay were previously established. Data was obtained as shown in the following table. Serum samples from healthy subjects and patients with various malignant diseases were analyzed. The cancer patients included in this study represented a variety of disease states from active, progressive malignancy to no clinical evidence of disease. The frequency of positive CEA results was significantly lower in patients with no evidence of active disease compared to those with active disease.

		% Distribution of CEA (ng/mL) (µg/L)				
Clinical Condition	N	0-2.5	2.6-5.0	5.1-10.0	10.1-20	> 20.0
Healthy Subject						
Nonsmokers	225	98.2	1.8	0	0	0
Smokers	150	87.3	8.0	4.7	0	0
Cancerous Diseases						
Colorectal	250	37.6	10.8	7.2	6.4	38.0
Lung	158	46.2	15.8	10.8	7.0	20.2
Breast	221	68.3	14.9	7.7	2.3	6.8
Gastric	35	60.0	17.1	8.6	5.7	8.6
Ovarian	35	82.8	11.4	2.9	2.9	0
Pancreatic	43	44.2	20.9	16.3	7.0	11.6
Liver	6	50.0	16.7	0	33.3	0
Lymphoproliferative	15	80.0	20.0	0	0	0
Other†	41	75.0	10.0	10.0	5.0	0

Clinical Condition	N	% Distribution of CEA (ng/mL) (µg/L) 0-2.5	2.6-5.0	5.1-10.0	10.1-20	> 20.0
Nonmalignant Diseases						
Cirrhosis	53	41.5	13.2	32.1	13.2	0
Other benign liver	5	40.0	20.0	0	40.0	0
Ulcerative colitis	11	90.9	9.1	0	0	0
Benign polyps	23	65.2	21.8	13.0	0	0
Colon and intestinal	15	66.7	20.0	0	13.3	0
Gastrointestinal	21	76.2	14.2	0	4.8	4.8
Breast	53	96.2	0	1.9	0	1.9
Kidney and bladder	12	83.4	8.3	0	8.3	0
Lung	29	69.0	24.1	6.9	0	0
Other‡	117	86.3	8.5	4.3	0.9	0

† Other cancers includes bladder, prostate, esophagus, head and neck, sarcoma, and kidney.

‡ Other includes benign uterine, cervical and vaginal, benign ovary, and benign male genital as well as other benign conditions.

These results were confirmed for the ADVIA Centaur CP CEA assay by analyzing 192 samples in the range of 0.5 to 85.2 ng/mL (µg/L). Refer to *Method Comparison*.

As with all *in vitro* diagnostic assays, each laboratory should determine its own reference range(s) for the diagnostic evaluation of patient results.[11]

Performance Characteristics

Specificity

The potential interference of NCA (normal cross-reacting antigen) and NCA2 was tested by adding these antigens to serum pools containing CEA. The level of CEA was then determined.

Cross-reactant	CEA value without cross-reactant (ng/mL) (µg/L)	CEA value with cross-reactant (ng/mL) (µg/L)
NCA (500 ng/mL)	2.5	2.5
	23.3	21.8
	71.2	66.1
NCA2 (100 ng/mL)	2.5	2.5
	23.3	22.9
	71.2	62.0

NCA and NCA2 showed minimal interference with the recovery of CEA from the serum samples. Average recovery is greater than 95%.

Interference by Chemotherapeutic Agents

The potential interference of chemotherapeutic agents was tested by adding these agents to serum pools containing CEA. The level of CEA in each of these pools was then determined and normalized to the level without the respective drugs.

Substance	Amount Added (µg/mL)	Mean % Recovery (Spike/control x 100)
Vincristine	0.70	100.4
Vinblastine	1.20	99.2
Cisplatinum	1.50	97.9
Tamoxifen	133	98.9
Cyclophosphamide	3300	96.9
5-Fluorouracil	360	96.9
Adriamycin	100	96.9

Substance	Amount Added (µg/mL)	Mean % Recovery (Spike/control x 100)
Folinic Acid	60	98.4
Mitomycin C	60	96.6
Methotrexate	4500	98.7
Bleomycin	1300	100.9

Interference testing was previously determined for the ACS:180 CEA assay.

Sensitivity and Assay Range

The ADVIA Centaur CP CEA assay measures CEA concentrations up to 100 ng/mL (µg/L) with a minimum detectable concentration (sensitivity) of 0.5 ng/mL (µg/L). The sensitivity was determined by diluting low patient specimens with the zero standard. The sensitivity of the assay with a particular patient specimen was taken as the CEA concentration at the point where the dilutions were statistically different from the zero standard and different from the next lower dilution. The assay sensitivity was taken as the average sensitivity determined from diluting six patient specimens.

Method Comparison

For 192 samples in the range of 0.5 to 85.2 ng/mL (µg/L), the relationship between the ADVIA Centaur CP CEA assay and the ACS:180 CEA assay is described by the equation:

ADVIA Centaur CP CEA = 0.99 (ACS:180 CEA) - 0.05 ng/mL

Correlation coefficient (r) = 0.99

For 196 samples in the range of 0.6 to 92.9 ng/mL (µg/L), the relationship between the ADVIA Centaur CP CEA assay and the ADVIA Centaur CEA assay is described by the equation:

ADVIA Centaur CP CEA = 0.96 (ADVIA Centaur CEA) + 0.20 ng/mL

Correlation coefficient (r) = 0.99

Dilution Recovery

Six serum samples in the range of 56.4 to 65.5 ng/mL (µg/L) of CEA were diluted 1:2, 1:4, 1:8, and 1:16 with CEA Diluent and assayed for recovery and parallelism. The recoveries ranged from 93.7% to 115.5% with a mean of 106.4%.

Sample	Dilution	Observed (ng/mL) (µg/L)	Expected (ng/mL) (µg/L)	Recovery %
1	—	64.9		
	1:2	34.5	32.4	106.2
	1:4	15.7	16.2	96.5
	1:8	7.9	8.1	97.4
	1:16	3.8	4.1	93.7
	Mean			98.5
2	—	56.4		
	1:2	29.8	28.2	105.7
	1:4	15.1	14.1	106.8
	1:8	7.4	7.1	105.2
	1:16	3.7	3.5	106.0
	Mean			105.9
3	—	61.2		
	1:2	32.4	30.6	105.8
	1:4	17.1	15.3	111.6
	1:8	8.8	7.6	115.5
	1:16	4.2	3.8	110.7
	Mean			110.9
4	—	57.5		
	1:2	30.5	28.7	106.0
	1:4	14.9	14.4	103.5
	1:8	8.1	7.2	112.9
	1:16	3.6	3.6	99.2
	Mean			105.4
5	—	65.5		
	1:2	35.3	32.7	107.8
	1:4	18.1	16.4	110.8
	1:8	9.3	8.2	113.6
	1:16	4.7	4.1	114.5
	Mean			111.7
6	—	61.5		
	1:2	34.0	30.8	110.6
	1:4	15.5	15.4	100.7
	1:8	8.4	7.7	108.8
	1:16	4.0	3.8	103.0
	Mean			105.8
Mean				**106.4**

Spiking Recovery

Varying amounts of CEA were added to seven serum samples with endogenous CEA levels ranging from 0 to 2.2 ng/mL (µg/L). The amount of CEA that was added varied from 4.8 to 67.3 ng/mL (µg/L). When compared to the expected value, the measured (recovered) values of CEA averaged 93.3% with a range of 80.2% to 106.4%.

Sample	Amount Added (ng/mL) (µg/L)	Observed (ng/mL) (µg/L)	Recovery %
1	—	0	
	4.8	4.6	95.8
	9.6	9.2	95.8
	23.5	20.8	88.5
	45.9	43.5	94.8
	67.3	59.6	88.6
	Mean		92.7
2	—	0	
	4.8	4.9	102.1
	9.6	8.9	92.7
	23.5	25.0	106.4
	45.9	47.9	104.4
	67.3	65.6	97.5
	Mean		100.6
3	—	0	
	4.8	3.9	81.3
	9.6	7.7	80.2
	23.5	19.0	80.9
	45.9	39.1	85.2
	67.3	56.6	84.1
	Mean		82.3
4	—	2.1	
	4.8	6.5	91.7
	9.6	10.6	88.5
	23.5	23.0	88.9
	45.9	45.9	95.4
	67.3	63.9	91.8
	Mean		91.3
5	—	0	
	4.8	4.4	91.7
	9.6	8.8	91.7
	23.5	21.1	89.8
	45.9	44.9	97.8
	67.3	63.4	94.2
	Mean		93.0
6	—	2.2	
	4.8	7.1	102.1
	9.6	11.7	99.0
	23.5	24.5	94.9
	45.9	48.2	100.2
	67.3	65.7	94.4
	Mean		98.1
7	—	0	
	4.8	4.5	93.8
	9.6	9.1	94.8
	23.5	23.2	98.7
	45.9	44.2	96.3
	67.3	62.9	93.5
	Mean		95.4
Mean			**93.3**

Spiking recovery testing was previously determined for the ACS:180 CEA Assay.

Precision

Precision was evaluated according to the CLSI protocol EP5-A2.[12] According to this protocol, the assay was run 2 times per day, for 10 days, using 1 reagent lot, on 5 instruments. The instrument was calibrated on the first run of day one. Assay results were calculated using the two-point calibration. The following results were obtained:

Mean (ng/mL) (µg/L)	Within-run CV(%)	Between run CV(%)	Total CV(%)
3.1	7.6	3.9	8.5
13.7	6.0	3.0	6.7
33.9	6.2	2.7	6.8

Traceability of Standardization

The ADVIA Centaur CP CEA assay is traceable to an internal standard manufactured using highly purified material. Assigned values of calibrators and ranges of Tumor Marker Plus and Ligand Plus controls are traceable to this standardization.

Evaluating Results

The following is recommended when you observe poor reproducibility of CEA values at low levels or if you are not satisfied with assay performance:

- Ensure that the assay reagent and calibrator lot numbers and expiration dates match those entered in the system.
- Ensure that the calibrators, quality control materials, and assay reagents were prepared according to the recommended procedures.
- Ensure that the recommended sample collection and handling procedures were followed.
- Ensure that the recommended system cleaning procedures were followed.
- Visually check the probe and tubing for obstructions, leaks, and deformities such as pinched or crimped tubing.
- Take further corrective action following established laboratory procedures.
- Calibrate the system using new assay reagents, calibrators, and quality control samples.
- Contact Siemens Medical Solutions Diagnostics for technical assistance.

Technical Assistance

For customer support, please contact your local technical support provider or distributor.

References

1. Statland BE, Winkel P. Neoplasia. In:Kaplan LA, Pesc AJ, editors. Clinical chemistry; theory, analysis, and correlation. 2nd ed. St. Louis: CV Mosby, 1989. p.734–5.
2. Sikorska H, Shuster J, Gold P. Clinical applications of carcinoembryonic antigen. Cancer Detection and Prevention 1988;12:321–55.
3. Lahousen M, Stettner H, Pickel H, et al. The predictive value of a combination of tumor markers in monitoring patients with ovarian cancer. Cancer 1987;60:2228–32.
4. Go VLW, Zamcheck N. The role of tumor markers in the management of colorectal cancer. Cancer 1982;50:2618–23.
5. McNeely MDD. Gastrointestinal function and digestive disease. In: Kaplan LA, Pesce AJ, editors. Clinical chemistry; theory, analysis, and correlation. 2nd ed. St. Louis: CV Mosby, 1989. p.411–2.

6. Fletcher RH. Carcinoembryonic Antigen. Annals of Internal Medicine 1986;104:66–73.
7. Minton J, Chevinsky AH. CEA directed second-look surgery for colon and rectal cancer. Annales Chirurgiae et Gynecologiae 1989;78:32–7.
8. Clinical and Laboratory Standards Institute (formerly NCCLS). *Procedures for the Handling and Processing of Blood Specimens; Approved Guideline - Third Edition.* Wayne, PA: Clinical and Laboratory Standards Institute; 2004. NCCLS Document H18-A3.
9. Boscato LM, Stuart MC. Heterophilic antibodies: a problem for all immunoassays. Clin Chem 1988;34:27–33.
10. Clinical and Laboratory Standards Institute (formerly NCCLS). *Interference Testing in Clinical Chemistry; Approved Guideline - Second Edition.* Wayne, PA: Clinical and Laboratory Standards Institute; 2005. NCCLS document EP7-A2.
11. Clinical and Laboratory Standards Institute (formerly NCCLS). *How to Define and Determine Reference Intervals in the Clinical Laboratory; Approved Guideline - Second Edition.* Wayne, PA: Clinical and Laboratory Standards Institute; 2000. NCCLS Document C28-A2.
12. Clinical and Laboratory Standards Institute (formerly NCCLS). *Evaluation of Precision Performance of Quantitative Measurement Methods; Approved Guideline - Second Edition.* Wayne, PA: Clinical and Laboratory Standards Institute; 2004. NCCLS Document EP5-A2.

ADVIA Centaur, ReadyPack, and ACS:180 are trademarks of Siemens Medical Solutions Diagnostics.

© 2007 Siemens Medical Solutions Diagnostics. All rights reserved.

US Pats 4,745,181; 4,918,192; 5,110,932; 5,609,822; 5,788,928

Origin: US

Siemens Medical Solutions Diagnostics
Tarrytown, NY 10591-5097 USA

EC REP Siemens Medical Solutions Diagnostics
Europe Limited
Chapel Lane, Swords, Co. Dublin, Ireland

Siemens Medical Solutions
Diagnostics Pty Ltd
ABN 65 007 436 651
885 Mountain Highway
Bayswater Victoria 3153
Australia

Siemens Medical Solutions Diagnostics
3-20-14 Higashi-Gotanda, Shinagawa
Tokyo, 141-8641, Japan

CEA

CE

Assay Summary

Sample Type	***Serum***
Sample Volume	***50 µL***
Calibrator	***D***
Sensitivity and Assay Range	***0.5 – 100 ng/mL (µg/L)***

Contents

REF	Contents	Number of Tests
09788458 (110762)	5 ReadyPack® primary reagent packs containing ADVIA Centaur® CEA Lite Reagent and Solid Phase ADVIA Centaur and ADVIA Centaur CP CEA Master Curve cards	500
or		
00937450 (110761)	1 ReadyPack primary reagent pack containing ADVIA Centaur CEA Lite Reagent and Solid Phase ADVIA Centaur and ADVIA Centaur CP CEA Master Curve cards	100

For a definition of symbols used in product labeling, please refer to the *Operator's Guide*.

Intended Use

For *in vitro* diagnostic use in the quantitative measurement of carcinoembryonic antigen (CEA) in serum to aid in the management of cancer patients in whom changing concentrations of CEA are observed using the ADVIA Centaur CP System.

WARNING: The concentration of CEA in a given specimen, as determined by assays from different manufacturers, can vary due to differences in assay methods and reagent specificity. The results reported by the laboratory to the physician must include the identity of the CEA assay used. Values obtained with different assay methods cannot be used interchangeably. If, in the course of monitoring a patient, the assay method used for determining serial CEA levels is changed, the laboratory must perform additional serial testing to confirm baseline values.

United States federal law restricts this device to sale and distribution by or on the order of a physician, or to a clinical laboratory; and use is restricted to, by, or on the order of a physician.

Materials Required But Not Provided

REF	Description	Contents
00133564	Calibrator D	6 vials of low calibrator CAL L
(672183)		6 vials of high calibrator CAL H
or		
04956492	Calibrator D	2 vials of low calibrator CAL L
(672173)		2 vials of high calibrator CAL H

Optional Reagents

REF	Description	Contents
07584944 (110322)	ADVIA Centaur CEA Diluent DIL	2 ReadyPack ancillary reagent packs containing 5 mL/pack
01989969 (672255)	CEA Diluent DIL	10 mL/vial
07642456 (986000)	Ligand Plus 1, 2, 3 quality control material	5 x 5 mL CONTROL 1 5 x 5 mL CONTROL 2 5 x 5 mL CONTROL 3
07377973 (986400)	Ligand Plus 1, 2, 3 barcode labels	60/level
03835942 (976700)	Tumor Marker Plus 1, 2 quality control material	3 x 2 mL CONTROL 1 3 x 2 mL CONTROL 2
09500144 (114925)	Tumor Marker Plus 1, 2 barcode labels	60/level
02444664 (672427)	CEA Master Curve Material	6 x 1 mL

Summary and Explanation of the Test

Carcinoembryonic antigen is a glycoprotein normally found in embryonic entodermal epithelium. In the mid 1960s, Gold and Freedman isolated CEA from extracts of malignant tissue.[1,2] CEA belongs to a group of tumor markers referred to as oncofetal proteins. Increased serum CEA levels have been detected in persons with primary colorectal cancer[1,2] and in patients with other malignancies including gastrointestinal tract, breast, lung, ovarian, prostatic, liver, and pancreatic cancers.[1-5] Elevated serum CEA levels have also been detected in patients with nonmalignant disease, especially patients who are older or who are smokers.[5,6] CEA levels are not useful in screening the general population for undetected cancers. However, CEA levels provide important information about patient prognosis, recurrence of tumors after surgical removal, and effectiveness of therapy.[1-6]

Serial CEA levels are useful in monitoring the course of disease. CEA levels generally fall to normal or near normal levels within 1 to 4 months after surgical removal of cancerous tissue. A rise in CEA levels may be the first indication of recurrence, and may precede physical signs and symptoms.[2,6,7] Serial CEA levels are also useful in assessing the effectiveness of chemotherapy or radiation treatment. A sustained rise in CEA levels can indicate ineffective therapy or possible metastasis.[1-5, 7]

CEA is a useful tool for monitoring and managing cancer therapy, and provides the clinician with additional information about patient prognosis.

Assay Principle

The ADVIA Centaur CP CEA assay is a two-site sandwich immunoassay using direct chemiluminometric technology, which uses constant amounts of two antibodies. The first antibody, in the Lite Reagent, is a purified polyclonal rabbit anti-CEA antibody labeled with acridinium ester. The second antibody, in the Solid Phase, is a monoclonal mouse anti-CEA antibody covalently coupled to paramagnetic particles.

The system automatically performs the following steps:

- dispenses 50 µL of sample into a cuvette
- dispenses 50 µL of Lite Reagent and 250 µL of Solid Phase and incubates for 9.7 minutes at 37°C
- separates, aspirates, and washes the cuvettes with Wash 1

- dispenses 300 µL each of Acid Reagent (R1) and Base Reagent (R2) to initiate the chemiluminescent reaction
- reports results according to the selected option, as described in the system operating instructions or in the online help system

Specimen Collection and Handling

Serum is the recommended sample type for this assay.

Plasma samples should not be used because their performance in this assay has not been determined.

The following recommendations for handling and storing blood samples are furnished by the Clinical and Laboratory Standards Institute (CLSI, formerly NCCLS):[8]

- Collect all blood samples observing universal precautions for venipuncture.
- Allow samples to clot adequately before centrifugation.
- Keep tubes stoppered and upright at all times.
- Do not use samples that have been stored at room temperature for longer than 8 hours.
- Tightly cap and refrigerate specimens at 2 to 8°C if the assay is not completed within 8 hours.
- Freeze samples at or below -20°C if the sample is not assayed within 48 hours.
- Freeze samples only once and mix thoroughly after thawing.

Before placing samples on the system ensure that:

- Samples are free of fibrin or other particulate matter. Remove particulates by centrifugation at 1000 x g for 15 to 20 minutes.
- Samples are free of bubbles.

Reagents

UP

Store the reagents upright at 2–8°C.
Mix all primary reagent packs by hand before loading them onto the system. Visually inspect the bottom of the reagent pack to ensure that all particles are dispersed and resuspended. For detailed information about preparing the reagents for use, refer to the *Operator's Guide*.

Reagent Pack	Reagent	Volume	Ingredients	Storage	Stability
ADVIA Centaur CEA ReadyPack primary reagent pack	Lite Reagent	5.0 mL/ reagent pack	polyclonal rabbit anti-CEA antibody (~400 ng/mL) labeled with acridinium ester in phosphate buffered saline with protein stabilizers, sodium azide (0.12%), and preservatives	2–8°C	until the expiration date on the pack label. For onboard stability, refer to *Onboard Stability and Calibration Interval.*
	Solid Phase	25.0 mL/ reagent pack	monoclonal mouse anti-CEA antibody (~120 µg/mL) covalently coupled to paramagnetic particles in phosphate buffered saline with protein stabilizers, sodium azide (0.11%), and preservatives	2–8°C	until the expiration date on the pack label. For onboard stability, refer to *Onboard Stability and Calibration Interval.*
ADVIA Centaur CEA DIL ReadyPack ancillary reagent pack	CEA Diluent	5.0 mL/ reagent pack	bicine buffer, gelatin, and BSA with preservatives and sodium azide (0.1%)	2–8°C	until the expiration date on the pack label or 28 consecutive days after accessing the ancillary reagent pack

24

R22 S28 **Harmful!** Harmful if swallowed. After contact with skin, wash immediately with plenty of soap and water. **Contains:** sodium azide; Lite Reagent, Solid Phase

CAUTION: This device contains material of animal origin and should be handled as a potential carrier and transmitter of disease.

NOTE: Sodium azide can react with copper and lead plumbing to form explosive metal azides. On disposal, flush reagents with a large volume of water to prevent the buildup of azides, if disposal into drain is in compliance with federal, state, and local requirements.

For *In Vitro* Diagnostic Use.

Loading Reagents

Ensure that the system has sufficient primary and ancillary reagent packs. For detailed information about preparing the system, refer to the system operating instructions or to the online help system.

Use this procedure to mix ADVIA Centaur CEA primary reagent packs that are unpierced.

CAUTION: Do not use this procedure for pierced ADVIA Centaur CEA reagent packs. Discard pierced ADVIA Centaur CEA reagent packs that have been removed from the system.

1. Hold the reagent pack firmly with thumb on one side and fingers on the other side. Shake vigorously for 15 seconds, using a back and forth motion.

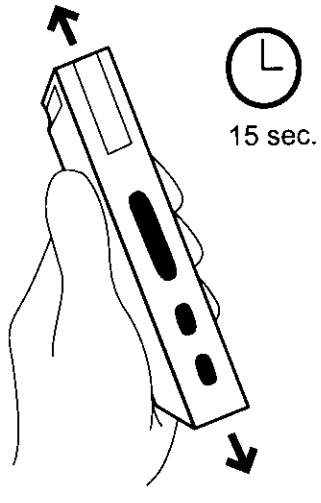

2. Hold the reagent pack firmly at one end, with film side up, and tap sharply on a bench top five times to reduce foaming caused by shaking.

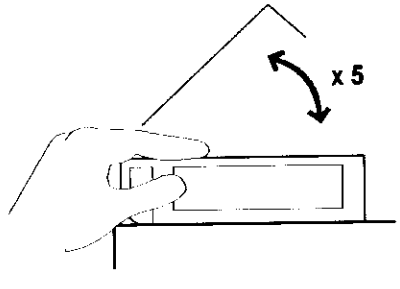

Visually inspect the bottom of the reagent pack to ensure that all particles are dispersed and resuspended.

Load the unpierced primary reagent packs in the primary reagent area. The arrows on the end label can be used as a placement guide. However, left, center, and right placement of the primary reagent packs is not required because there is only one reagent probe on the ADVIA Centaur CP System. The system automatically mixes the primary reagent packs to maintain homogeneous suspension of the reagents. For detailed information about loading reagents, refer to the system operating instructions or to the online help system.

If automatic dilution of a sample is required, load ADVIA Centaur CEA Diluent in the ancillary reagent area.

Onboard Stability and Calibration Interval

Onboard Stability	Calibration Interval
28 days	14 days

Additionally, the ADVIA Centaur CP CEA assay requires a two-point calibration:

- when changing lot numbers of primary reagent packs
- when replacing system components
- when quality control results are repeatedly out of range

NOTE:

- Discard the primary reagent packs at the end of the onboard stability interval.
- Do not use reagents beyond the expiration date.

Master Curve Calibration

The ADVIA Centaur CP CEA assay requires a Master Curve calibration when using a new lot number of Lite Reagent and Solid Phase. For each new lot number of Lite Reagent and Solid Phase, use the barcode reader or keyboard to enter the Master Curve values on the system. The Master Curve card contains the Master Curve values. For detailed information about entering calibration values, refer to the system operating instructions or to the online help system.

Quality Control

For detailed information about entering quality control values, refer to the system operating instructions or to the online help system.

To monitor system performance and chart trends, as a minimum requirement, two levels of quality control material should be assayed on each day that samples are analyzed. Quality control samples should also be assayed when performing a two-point calibration. Treat all quality control samples the same as patient samples.

For quality control of the ADVIA Centaur CP CEA assay, use Ligand Plus, Tumor Marker Plus, or an equivalent quality control material. Refer to the quality control product insert for the suggested Expected Values. If the quality control results do not fall within the Expected Values or within the laboratory's established values, do not report results. Take the following actions:

- Verify that the materials are not expired.
- Verify that required maintenance was performed.
- Verify that the assay was performed according to the instructions for use.
- Rerun the assay with fresh quality control samples.
- If necessary, contact your local technical support provider or distributor for assistance.

Sample Volume

This assay requires 50 µL of sample for a single determination. This volume does not include the unusable volume in the sample container or the additional volume required when performing duplicates or other tests on the same sample. For detailed information about determining the minimum required volume, refer to the system operating instructions or to the online help system.

NOTE: The sample volume required to perform onboard dilution differs from the sample volume required to perform a single determination. Refer to the following information for the sample volume required to perform onboard dilutions:

Dilution	Sample Volume (µL)
1:5	40
1:10, 1:50, 1:100	20

Assay Procedure

For detailed procedural information, refer to the system operating instructions or to the online help system.

Procedural Notes

Calculations

For detailed information about how the system calculates results, refer to the system operating instructions or to the online help system.

The system reports serum CEA results in ng/mL (common units) or µg/L (SI units), depending on the units defined when setting up the assay. The conversion formula is 1 ng/mL = 1 µg/L.

Dilutions

- Serum samples with CEA levels greater than 100 ng/mL (µg/L) must be diluted and retested to obtain accurate results.
- Patient samples can be automatically diluted by the system or prepared manually.
- For automatic dilutions, ensure that ADVIA Centaur CEA Diluent is loaded and set the system parameters as follows:

  Dilution point: ≤ 100 ng/mL (µg/L)

  Dilution factor: 5, 10, 50, 100

  For detailed information about automatic dilutions, refer to the system operating instructions or to the online help system.
- Manually dilute the patient samples when patient results exceed the linearity of the assay using automatic dilution, or when laboratory protocol requires manual dilution.
- Use CEA Diluent to manually dilute patient samples, and then load the diluted sample in the sample rack, replacing the undiluted sample.
- Ensure that results are mathematically corrected for dilution. If a dilution factor is entered when scheduling the test, the system automatically calculates the result.

High Dose Hook Effect

Patient samples with high CEA levels can cause a paradoxical decrease in the RLUs (high dose hook effect). In this assay, patient samples with CEA levels as high as 100,000 ng/mL (µg/L) will assay greater than 100 ng/mL (µg/L).

Disposal

Dispose of hazardous and biologically contaminated materials according to the practices of your institution. Discard all materials in a safe and acceptable manner and in compliance with all federal, state, and local requirements.

Limitations

NOTE: Do not interpret levels of CEA as absolute evidence of the presence or the absence of malignant disease. Measurements of CEA should always be used in conjunction with other diagnostic procedures, including information from the patient's clinical evaluation.

The concentration of CEA in a given specimen determined with assays from different manufacturers can vary due to differences in assay methods, calibration, and reagent specificity. CEA determined with different manufacturers' assays will vary depending on the method of standardization and antibody specificity.

WARNING: Do not use the ADVIA Centaur CP CEA immunoassay as a screening test for diagnosis.

Heterophilic antibodies in human serum can react with reagent immunoglobulins, interfering with *in vitro* immunoassays.[9] Patients routinely exposed to animals or to animal serum products can be prone to this interference and anomalous values may be observed. Additional information may be required for diagnosis.

Serum specimens that are . . .	Demonstrate ≤ 5% change in results up to . . .
hemolyzed	500 mg/dL of hemoglobin
lipemic	1000 mg/dL of triglycerides
icteric	20 mg/dL of bilirubin

Interference testing was determined according to CLSI Document EP7-A2.[10]

Expected Results

The expected results for the ACS:180® CEA assay were previously established. Data was obtained as shown in the following table. Serum samples from healthy subjects and patients with various malignant diseases were analyzed. The cancer patients included in this study represented a variety of disease states from active, progressive malignancy to no clinical evidence of disease. The frequency of positive CEA results was significantly lower in patients with no evidence of active disease compared to those with active disease.

		% Distribution of CEA (ng/mL) (µg/L)				
Clinical Condition	N	0-2.5	2.6-5.0	5.1-10.0	10.1-20	> 20.0
Healthy Subject						
Nonsmokers	225	98.2	1.8	0	0	0
Smokers	150	87.3	8.0	4.7	0	0
Cancerous Diseases						
Colorectal	250	37.6	10.8	7.2	6.4	38.0
Lung	158	46.2	15.8	10.8	7.0	20.2
Breast	221	68.3	14.9	7.7	2.3	6.8
Gastric	35	60.0	17.1	8.6	5.7	8.6
Ovarian	35	82.8	11.4	2.9	2.9	0
Pancreatic	43	44.2	20.9	16.3	7.0	11.6
Liver	6	50.0	16.7	0	33.3	0
Lymphoproliferative	15	80.0	20.0	0	0	0
Other†	41	75.0	10.0	10.0	5.0	0

Clinical Condition	N	% Distribution of CEA (ng/mL) (µg/L) 0-2.5	2.6-5.0	5.1-10.0	10.1-20	> 20.0
Nonmalignant Diseases						
Cirrhosis	53	41.5	13.2	32.1	13.2	0
Other benign liver	5	40.0	20.0	0	40.0	0
Ulcerative colitis	11	90.9	9.1	0	0	0
Benign polyps	23	65.2	21.8	13.0	0	0
Colon and intestinal	15	66.7	20.0	0	13.3	0
Gastrointestinal	21	76.2	14.2	0	4.8	4.8
Breast	53	96.2	0	1.9	0	1.9
Kidney and bladder	12	83.4	8.3	0	8.3	0
Lung	29	69.0	24.1	6.9	0	0
Other‡	117	86.3	8.5	4.3	0.9	0

† Other cancers includes bladder, prostate, esophagus, head and neck, sarcoma, and kidney.

‡ Other includes benign uterine, cervical and vaginal, benign ovary, and benign male genital as well as other benign conditions.

These results were confirmed for the ADVIA Centaur CP CEA assay by analyzing 192 samples in the range of 0.5 to 85.2 ng/mL (µg/L). Refer to *Method Comparison*.

As with all *in vitro* diagnostic assays, each laboratory should determine its own reference range(s) for the diagnostic evaluation of patient results.[11]

Performance Characteristics

Specificity

The potential interference of NCA (normal cross-reacting antigen) and NCA2 was tested by adding these antigens to serum pools containing CEA. The level of CEA was then determined.

Cross-reactant	CEA value without cross-reactant (ng/mL) (µg/L)	CEA value with cross-reactant (ng/mL) (µg/L)
NCA (500 ng/mL)	2.5	2.5
	23.3	21.8
	71.2	66.1
NCA2 (100 ng/mL)	2.5	2.5
	23.3	22.9
	71.2	62.0

NCA and NCA2 showed minimal interference with the recovery of CEA from the serum samples. Average recovery is greater than 95%.

Interference by Chemotherapeutic Agents

The potential interference of chemotherapeutic agents was tested by adding these agents to serum pools containing CEA. The level of CEA in each of these pools was then determined and normalized to the level without the respective drugs.

Substance	Amount Added (µg/mL)	Mean % Recovery (Spike/control x 100)
Vincristine	0.70	100.4
Vinblastine	1.20	99.2
Cisplatinum	1.50	97.9
Tamoxifen	133	98.9
Cyclophosphamide	3300	96.9
5-Fluorouracil	360	96.9
Adriamycin	100	96.9

Substance	Amount Added (µg/mL)	Mean % Recovery (Spike/control x 100)
Folinic Acid	60	98.4
Mitomycin C	60	96.6
Methotrexate	4500	98.7
Bleomycin	1300	100.9

Interference testing was previously determined for the ACS:180 CEA assay.

Sensitivity and Assay Range

The ADVIA Centaur CP CEA assay measures CEA concentrations up to 100 ng/mL (µg/L) with a minimum detectable concentration (sensitivity) of 0.5 ng/mL (µg/L). The sensitivity was determined by diluting low patient specimens with the zero standard. The sensitivity of the assay with a particular patient specimen was taken as the CEA concentration at the point where the dilutions were statistically different from the zero standard and different from the next lower dilution. The assay sensitivity was taken as the average sensitivity determined from diluting six patient specimens.

Method Comparison

For 192 samples in the range of 0.5 to 85.2 ng/mL (µg/L), the relationship between the ADVIA Centaur CP CEA assay and the ACS:180 CEA assay is described by the equation:

ADVIA Centaur CP CEA = 0.99 (ACS:180 CEA) - 0.05 ng/mL

Correlation coefficient (r) = 0.99

For 196 samples in the range of 0.6 to 92.9 ng/mL (µg/L), the relationship between the ADVIA Centaur CP CEA assay and the ADVIA Centaur CEA assay is described by the equation:

ADVIA Centaur CP CEA = 0.96 (ADVIA Centaur CEA) + 0.20 ng/mL

Correlation coefficient (r) = 0.99

Dilution Recovery

Six serum samples in the range of 56.4 to 65.5 ng/mL (µg/L) of CEA were diluted 1:2, 1:4, 1:8, and 1:16 with CEA Diluent and assayed for recovery and parallelism. The recoveries ranged from 93.7% to 115.5% with a mean of 106.4%.

Sample	Dilution	Observed (ng/mL) (µg/L)	Expected (ng/mL) (µg/L)	Recovery %
1	—	64.9		
	1:2	34.5	32.4	106.2
	1:4	15.7	16.2	96.5
	1:8	7.9	8.1	97.4
	1:16	3.8	4.1	93.7
	Mean			98.5
2	—	56.4		
	1:2	29.8	28.2	105.7
	1:4	15.1	14.1	106.8
	1:8	7.4	7.1	105.2
	1:16	3.7	3.5	106.0
	Mean			105.9
3	—	61.2		
	1:2	32.4	30.6	105.8
	1:4	17.1	15.3	111.6
	1:8	8.8	7.6	115.5
	1:16	4.2	3.8	110.7
	Mean			110.9
4	—	57.5		
	1:2	30.5	28.7	106.0
	1:4	14.9	14.4	103.5
	1:8	8.1	7.2	112.9
	1:16	3.6	3.6	99.2
	Mean			105.4
5	—	65.5		
	1:2	35.3	32.7	107.8
	1:4	18.1	16.4	110.8
	1:8	9.3	8.2	113.6
	1:16	4.7	4.1	114.5
	Mean			111.7
6	—	61.5		
	1:2	34.0	30.8	110.6
	1:4	15.5	15.4	100.7
	1:8	8.4	7.7	108.8
	1:16	4.0	3.8	103.0
	Mean			105.8
Mean				**106.4**

Spiking Recovery

Varying amounts of CEA were added to seven serum samples with endogenous CEA levels ranging from 0 to 2.2 ng/mL (µg/L). The amount of CEA that was added varied from 4.8 to 67.3 ng/mL (µg/L). When compared to the expected value, the measured (recovered) values of CEA averaged 93.3% with a range of 80.2% to 106.4%.

Sample	Amount Added (ng/mL) (µg/L)	Observed (ng/mL) (µg/L)	Recovery %
1	—	0	
	4.8	4.6	95.8
	9.6	9.2	95.8
	23.5	20.8	88.5
	45.9	43.5	94.8
	67.3	59.6	88.6
	Mean		92.7
2	—	0	
	4.8	4.9	102.1
	9.6	8.9	92.7
	23.5	25.0	106.4
	45.9	47.9	104.4
	67.3	65.6	97.5
	Mean		100.6
3	—	0	
	4.8	3.9	81.3
	9.6	7.7	80.2
	23.5	19.0	80.9
	45.9	39.1	85.2
	67.3	56.6	84.1
	Mean		82.3
4	—	2.1	
	4.8	6.5	91.7
	9.6	10.6	88.5
	23.5	23.0	88.9
	45.9	45.9	95.4
	67.3	63.9	91.8
	Mean		91.3
5	—	0	
	4.8	4.4	91.7
	9.6	8.8	91.7
	23.5	21.1	89.8
	45.9	44.9	97.8
	67.3	63.4	94.2
	Mean		93.0
6	—	2.2	
	4.8	7.1	102.1
	9.6	11.7	99.0
	23.5	24.5	94.9
	45.9	48.2	100.2
	67.3	65.7	94.4
	Mean		98.1
7	—	0	
	4.8	4.5	93.8
	9.6	9.1	94.8
	23.5	23.2	98.7
	45.9	44.2	96.3
	67.3	62.9	93.5
	Mean		95.4
Mean			**93.3**

Spiking recovery testing was previously determined for the ACS:180 CEA Assay.

Precision

Precision was evaluated according to the CLSI protocol EP5-A2.[12] According to this protocol, the assay was run 2 times per day, for 10 days, using 1 reagent lot, on 5 instruments. The instrument was calibrated on the first run of day one. Assay results were calculated using the two-point calibration. The following results were obtained:

Mean (ng/mL) (µg/L)	Within-run CV(%)	Between run CV(%)	Total CV(%)
3.1	7.6	3.9	8.5
13.7	6.0	3.0	6.7
33.9	6.2	2.7	6.8

Traceability of Standardization

The ADVIA Centaur CP CEA assay is traceable to an internal standard manufactured using highly purified material. Assigned values of calibrators and ranges of Tumor Marker Plus and Ligand Plus controls are traceable to this standardization.

Evaluating Results

The following is recommended when you observe poor reproducibility of CEA values at low levels or if you are not satisfied with assay performance:

- Ensure that the assay reagent and calibrator lot numbers and expiration dates match those entered in the system.
- Ensure that the calibrators, quality control materials, and assay reagents were prepared according to the recommended procedures.
- Ensure that the recommended sample collection and handling procedures were followed.
- Ensure that the recommended system cleaning procedures were followed.
- Visually check the probe and tubing for obstructions, leaks, and deformities such as pinched or crimped tubing.
- Take further corrective action following established laboratory procedures.
- Calibrate the system using new assay reagents, calibrators, and quality control samples.
- Contact Siemens Medical Solutions Diagnostics for technical assistance.

Technical Assistance

For customer support, please contact your local technical support provider or distributor.

References

1. Statland BE, Winkel P. Neoplasia. In:Kaplan LA, Pesc AJ, editors. Clinical chemistry; theory, analysis, and correlation. 2nd ed. St. Louis: CV Mosby, 1989. p.734–5.
2. Sikorska H, Shuster J, Gold P. Clinical applications of carcinoembryonic antigen. Cancer Detection and Prevention 1988;12:321–55.
3. Lahousen M, Stettner H, Pickel H, et al. The predictive value of a combination of tumor markers in monitoring patients with ovarian cancer. Cancer 1987;60:2228–32.
4. Go VLW, Zamcheck N. The role of tumor markers in the management of colorectal cancer. Cancer 1982;50:2618–23.
5. McNeely MDD. Gastrointestinal function and digestive disease. In: Kaplan LA, Pesce AJ, editors. Clinical chemistry; theory, analysis, and correlation. 2nd ed. St. Louis: CV Mosby, 1989. p.411–2.

6. Fletcher RH. Carcinoembryonic Antigen. Annals of Internal Medicine 1986;104:66–73.
7. Minton J, Chevinsky AH. CEA directed second-look surgery for colon and rectal cancer. Annales Chirurgiae et Gynecologiae 1989;78:32–7.
8. Clinical and Laboratory Standards Institute (formerly NCCLS). *Procedures for the Handling and Processing of Blood Specimens; Approved Guideline - Third Edition.* Wayne, PA: Clinical and Laboratory Standards Institute; 2004. NCCLS Document H18-A3.
9. Boscato LM, Stuart MC. Heterophilic antibodies: a problem for all immunoassays. Clin Chem 1988;34:27–33.
10. Clinical and Laboratory Standards Institute (formerly NCCLS). *Interference Testing in Clinical Chemistry; Approved Guideline - Second Edition.* Wayne, PA: Clinical and Laboratory Standards Institute; 2005. NCCLS document EP7-A2.
11. Clinical and Laboratory Standards Institute (formerly NCCLS). *How to Define and Determine Reference Intervals in the Clinical Laboratory; Approved Guideline - Second Edition.* Wayne, PA: Clinical and Laboratory Standards Institute; 2000. NCCLS Document C28-A2.
12. Clinical and Laboratory Standards Institute (formerly NCCLS). *Evaluation of Precision Performance of Quantitative Measurement Methods; Approved Guideline - Second Edition.* Wayne, PA: Clinical and Laboratory Standards Institute; 2004. NCCLS Document EP5-A2.

ADVIA Centaur, ReadyPack, and ACS:180 are trademarks of Siemens Medical Solutions Diagnostics.

© 2007 Siemens Medical Solutions Diagnostics. All rights reserved.

US Pats 4,745,181; 4,918,192; 5,110,932; 5,609,822; 5,788,928

Origin: US

Siemens Medical Solutions Diagnostics
Tarrytown, NY 10591-5097 USA

EC REP Siemens Medical Solutions Diagnostics
Europe Limited
Chapel Lane, Swords, Co. Dublin, Ireland

Siemens Medical Solutions
Diagnostics Pty Ltd
ABN 65 007 436 651
885 Mountain Highway
Bayswater Victoria 3153
Australia

Siemens Medical Solutions Diagnostics
3-20-14 Higashi-Gotanda, Shinagawa
Tokyo, 141-8641, Japan

Ferritin (FER)

CE

Assay Summary

Sample Type	***Serum, Heparinized Plasma, EDTA Plasma***
Sample Volume	***25 µL***
Calibrator	***C***
Sensitivity and Assay Range	***0.5 – 1650 ng/mL (1.1 – 3630 pmol/L)***

Contents

REF	Contents	Number of Tests
00495776 (110746)	5 ReadyPack® primary reagent packs containing ADVIA Centaur® FER Lite Reagent and Solid Phase ADVIA Centaur and ADVIA Centaur CP FER Master Curve cards	250
or		
07875728 (110745)	1 ReadyPack primary reagent pack containing ADVIA Centaur FER Lite Reagent and Solid Phase ADVIA Centaur and ADVIA Centaur CP FER Master Curve cards	50

For a definition of symbols used in product labeling, please refer to the *Operator's Guide.*

Intended Use

For *in vitro* diagnostic use in the quantitative determination of ferritin in serum or plasma using the ADVIA Centaur CP System, to aid in the diagnosis of iron deficiency anemia and iron overload.

Materials Required But Not Provided

REF	Description	Contents
06567787 (672182)	Calibrator C	6 vials of low calibrator CAL L 6 vials of high calibrator CAL H
or		
03439230 (672172)	Calibrator C	2 vials of low calibrator CAL L 2 vials of high calibrator CAL H

Optional Reagents

REF	Description	Contents
07907174 (110313)	ADVIA Centaur Multi-Diluent 1 M-DIL 1	6 ReadyPack ancillary reagent packs containing 25 mL/pack
or		
07293184 (110312)	ADVIA Centaur Multi-Diluent 1 M-DIL 1	2 ReadyPack ancillary reagent packs containing 25 mL/pack
09348792 (672177)	Multi-Diluent 1 M-DIL 1	50 mL/vial
07642456 (986000)	Ligand Plus 1, 2, 3 quality control material	5 x 5 mL CONTROL 1 5 x 5 mL CONTROL 2 5 x 5 mL CONTROL 3
07377973 (986400)	Ligand Plus 1, 2, 3 barcode labels	60/level

REF	Description	Contents
05238305 (672416)	FER Master Curve Material	8 x 1 mL

Summary and Explanation of the Test

Ferritin is a compound composed of iron molecules bound to apoferritin, a protein shell. Stored iron represents about 25% of total iron in the body, and most of this iron is stored as ferritin.[1] Ferritin is found in many body cells, but especially those in the liver, spleen, bone marrow, and in reticuloendothelial cells.[2]

Ferritin plays a significant role in the absorption, storage, and release of iron. As the storage form of iron, ferritin remains in the body tissues until it is needed for erythropoiesis. When needed, the iron molecules are released from the apoferritin shell and bind to transferrin, the circulating plasma protein that transports iron to the erythropoietic cells.[3]

Although dietary iron is poorly absorbed, the body conserves its iron stores carefully, reabsorbing most of the iron released from the breakdown of red blood cells. As a result, the body normally loses only 1 to 2 mg of iron per day, which is generally restored by the iron absorbed in the small intestine from dietary sources.[1]

Ferritin is found in serum in low concentrations and is directly proportional to the body's iron stores.[1] Serum ferritin concentration, when analyzed with other factors such as serum iron, iron-binding capacity, and tissue iron stores, is valuable in the diagnosis of iron-deficiency anemias, anemias of chronic infection, and conditions such as thalassemia and hemochromatosis that are associated with iron overload. Measurement of serum ferritin is particularly valuable in distinguishing iron-deficiency anemias caused by low iron stores from those resulting from inadequate iron utilization.[1]

Assay Principle

The ADVIA Centaur CP Ferritin assay is a two-site sandwich immunoassay using direct chemiluminometric technology, which uses constant amounts of two anti-ferritin antibodies. The first antibody, in the Lite Reagent, is a polyclonal goat anti-ferritin antibody labeled with acridinium ester. The second antibody, in the Solid Phase, is a monoclonal mouse anti-ferritin antibody, which is covalently coupled to paramagnetic particles.

The system automatically performs the following steps:

- dispenses 25 µL of sample into a cuvette
- dispenses 100 µL of Lite Reagent and 450 µL of Solid Phase and incubates for 9.7 minutes at 37°C
- separates, aspirates, and washes the cuvettes with Wash 1
- dispenses 300 µL each of Acid Reagent (R1) and Base Reagent (R2) to initiate the chemiluminescent reaction
- reports results according to the selected option, as described in the system operating instructions or in the online help system

A direct relationship exists between the amount of ferritin present in the patient sample and the amount of relative light units (RLUs) detected by the system.

Specimen Collection and Handling

Serum, heparinized plasma, or EDTA plasma are the recommended sample types for this assay.

Evaluation of plasma samples showed an average 2% difference in observed values compared to serum samples.

The following recommendations for handling and storing blood samples are furnished by the National Committee for Clinical Laboratory Standards (NCCLS):[4]

- Collect all blood samples observing universal precautions for venipuncture.
- Allow samples to clot adequately before centrifugation.
- Keep tubes stoppered and upright at all times.
- Do not use samples that have been stored at room temperature for longer than 8 hours.
- Tightly cap and refrigerate specimens at 2 to 8°C if the assay is not completed within 8 hours.
- Freeze samples at or below -20°C if the sample is not assayed within 48 hours.
- Freeze samples only once and mix thoroughly after thawing.

Before placing samples on the system ensure that:

- Samples are free of fibrin or other particulate matter.
- Samples are free of bubbles.

Reagents

UP

Store the reagents upright at 2–8°C.
Mix all primary reagent packs by hand before loading them onto the system. Visually inspect the bottom of the reagent pack to ensure that all particles are dispersed and resuspended. For detailed information about preparing the reagents for use, refer to the *Operator's Guide*.

Reagent Pack	Reagent	Volume	Ingredients	Storage	Stability
ADVIA Centaur FER ReadyPack primary reagent pack	Lite Reagent	5.0 mL/ reagent pack	polyclonal goat anti-ferritin antibody (~0.64 µg/mL) labeled with acridinium ester in HEPES buffer with protein stabilizers, sodium azide (< 0.1%), and preservatives	2–8°C	until the expiration date on the pack label. For onboard stability, refer to *Onboard Stability and Calibration Interval.*
	Solid Phase	22.5 mL/ reagent pack	monoclonal mouse anti-ferritin antibody (~32.2 µg/mL) covalently coupled to paramagnetic particles in sodium barbital buffer with protein stabilizers, sodium azide (< 0.1%), and preservatives	2–8°C	until the expiration date on the pack label. For onboard stability, refer to *Onboard Stability and Calibration Interval.*
ADVIA Centaur M-DIL 1 ReadyPack ancillary reagent pack	Multi-Diluent 1	25.0 mL/ reagent pack	equine serum with sodium azide (0.1%) and preservatives	2–8°C	until the expiration date on the pack label or 28 consecutive days after accessing the ancillary reagent pack

CAUTION: This device contains material of animal origin and should be handled as a potential carrier and transmitter of disease.

NOTE: Sodium azide can react with copper and lead plumbing to form explosive metal azides. On disposal, flush reagents with a large volume of water to prevent the buildup of azides, if disposal into a drain is in compliance with federal, state, and local requirements.

For *In Vitro* Diagnostic Use.

Loading Reagents

Ensure that the system has sufficient primary and ancillary reagent packs. For detailed information about preparing the system, refer to the system operating instructions or to the online help system.

Mix all primary reagent packs by hand before loading them onto the system. Visually inspect the bottom of the reagent pack to ensure that all particles are dispersed and resuspended. For detailed information about preparing the reagents for use, refer to the *Operator's Guide*.

Load the primary reagent packs in the primary reagent area. The arrows on the end label can be used as a placement guide. However left, center, and right placement of the primary reagent packs is not required because there is only one reagent probe on the ADVIA Centaur CP System. The system automatically mixes the primary reagent packs to maintain homogeneous suspension of the reagents. For detailed information about loading reagents, refer to the system operating instructions or to the online help system.

If automatic dilution of a sample is required, load ADVIA Centaur Multi-Diluent 1 in the ancillary reagent area.

Onboard Stability and Calibration Interval

Onboard Stability	Calibration Interval
28 days	28 days

Additionally, the ADVIA Centaur CP Ferritin assay requires a two-point calibration:

- when changing lot numbers of primary reagent packs
- when replacing system components
- when quality control results are repeatedly out of range

NOTE:

- Discard the primary reagent packs at the end of the onboard stability interval.
- Do not use reagents beyond the expiration date.

Master Curve Calibration

The ADVIA Centaur CP Ferritin assay requires a Master Curve calibration when using a new lot number of Lite Reagent and Solid Phase. For each new lot number of Lite Reagent and Solid Phase, use the barcode reader or keyboard to enter the Master Curve values on the system. The Master Curve card contains the Master Curve values. For detailed information about entering calibration values, refer to the system operating instructions or to the online help system.

Quality Control

For detailed information about entering quality control values, refer to the system operating instructions or to the online help system.

To monitor system performance and chart trends, as a minimum requirement, two levels of quality control material should be assayed on each day that samples are analyzed. Quality control samples should also be assayed when performing a two-point calibration. Treat all quality control samples the same as patient samples.

For quality control of the ADVIA Centaur CP Ferritin assay, use Ligand Plus or an equivalent quality control material. Refer to the quality control product insert for the suggested Expected Values. If the quality control results do not fall within the Expected Values or within the laboratory's established values, do not report results. Take the following actions:

- Verify that the materials are not expired.
- Verify that required maintenance was performed.
- Verify that the assay was performed according to the instructions for use.
- Rerun the assay with fresh quality control samples.
- If necessary, contact your local technical support provider or distributor for assistance.

Sample Volume

This assay requires 25 µL of sample for a single determination. This volume does not include the unusable volume in the sample container or the additional volume required when performing duplicates or other tests on the same sample. For detailed information about determining the minimum required volume, refer to the system operating instructions or to the online help system.

NOTE: The sample volume required to perform onboard dilution differs from the sample volume required to perform a single determination. Refer to the following information for the sample volume required to perform onboard dilutions:

Dilution	Sample Volume (µL)
1:2	100
1:5	40
1:10	20

Assay Procedure

For detailed procedural information, refer to the system operating instructions or to the online help system.

Procedural Notes

Calculations

For detailed information about how the system calculates results, refer to the system operating instructions or to the online help system.

The system reports serum ferritin results in ng/mL (common units) or pmol/L (SI units), depending on the units defined when setting up the assay. The conversion formula is 1 ng/mL = 2.20 pmol/L.

Dilutions

- Samples with ferritin levels greater than 1650 ng/mL (3630 pmol/L) must be diluted and retested to obtain accurate results.
- Patient samples can be automatically diluted by the system or prepared manually.

- For automatic dilutions, ensure that ADVIA Centaur Multi-Diluent 1 is loaded and set the system parameters as follows:

  Dilution point: ≤ 1650 ng/mL (3630 pmol/L)

  Dilution factor: 2, 5, 10

  For detailed information about automatic dilutions, refer to the system operating instructions or to the online help system.
- Manually dilute the patient samples when patient results exceed the linearity of the assay using automatic dilution, or when laboratory protocol requires manual dilution.
- Use Multi-Diluent 1 to manually dilute patient samples, and then load the diluted sample in the sample rack, replacing the undiluted sample.
- Ensure that results are mathematically corrected for dilution. If a dilution factor is entered when scheduling the test, the system automatically calculates the result.

High Dose Hook Effect

Patient samples with high ferritin levels can cause a paradoxical decrease in the RLUs (high dose hook effect). In this assay, patient samples with ferritin levels as high as 80,000 ng/mL (176,000 pmol/L) will assay greater than 1650 ng/mL (3630 pmol/L).

Disposal

Dispose of hazardous or biologically contaminated materials according to the practices of your institution. Discard all materials in a safe and acceptable manner, and in compliance with all federal, state, and local requirements.

Limitations

Serum ferritin values are elevated in the presence of the following conditions and do not reflect actual body iron stores:[1,5]

- inflammation
- significant tissue destruction
- liver disease
- malignancies such as acute leukemia and Hodgkin's disease
- therapy with iron supplements

Heterophilic antibodies in human serum can react with reagent immunoglobulins, interfering with *in vitro* immunoassays.[6] Patients routinely exposed to animals or to animal serum products can be prone to this interference and anomalous values may be observed. Additional information may be required for diagnosis.

Serum specimens that are . . .	Have an insignificant effect on the assay up to . . .
hemolyzed*	900 mg/dL of hemoglobin
lipemic	2000 mg/dL of triglycerides
icteric	60 mg/dL of bilirubin

* Avoid assaying grossly hemolyzed samples because the release of intracellular ferritin can cause elevated results.

Interference testing was determined according to NCCLS Document EP7-A.[7]

Expected Results

The expected results for the ACS:180® Ferritin assay were previously established. In clinical studies, the following values for apparently healthy male and female subjects with normal liver function enzyme tests, bilirubin, and serum iron tests, were determined:

		Mean		95th Percentile Range	
Category	N	(ng/mL)	(pmol/L)	(ng/mL)	(pmol/L)
Normal Males	142	94	207	22–322	48–708
Normal Females	134	46	101	10–291	22–640

The following values for patients with several diagnosed conditions were determined:

		Mean		Total Observed Range	
Category	N	(ng/mL)	(pmol/L)	(ng/mL)	(pmol/L)
Iron Deficiency	60	11.6	26	0.68–34.5	1.5–76
Other Anemias	7	610.8	1344	13.0–1390.8	29–3060
Iron Overload	44	1899.6	4178	334.6–8573.0	736–18,861
Renal Dialysis	31	312.3	687	31.3–1321.2	68.9–2907
Chronic Liver Disease	34	1967.1	4328	7.9–12,826.0	17–28,217

These results were confirmed for the ADVIA Centaur CP Ferritin assay by analyzing 229 serum samples in the range of 2.39 to 1507.8 ng/mL (5.26 to 3317.2 pmol/L). Refer to *Method Comparison*.

As with all *in vitro* diagnostic assays, each laboratory should determine its own reference range(s) for the diagnostic evaluation of patient results.[8]

Performance Characteristics

Specificity

The cross-reactivity of the assay with human liver ferritin was determined by adding different levels of crystalline liver ferritin to four samples containing endogenous ferritin. The ferritin level in the samples was then determined.

Sample	1	2	3	4
Endogenous Ferritin Value (ng/mL)	55.3	116.3	431.8	747.3
Liver Ferritin Added (ng/mL)	262.0	262.0	262.0	262.0
Expected Value (ng/mL)	317.3	378.3	693.8	1009.3
Observed Value (ng/mL)	319.0	375.2	731.4	1034.9
% Recovery*	101	99	114	109

* Mean % recovery or cross-reactivity is 105.8%.

Interference testing was previously determined for the ACS:180 Ferritin assay.

Sensitivity and Assay Range

The ADVIA Centaur Ferritin CP assay measures ferritin concentrations up to 1650 ng/mL (3630 pmol/L) with a minimum detectable concentration (analytical sensitivity) of 0.5 ng/mL (1.1 pmol/L). Analytical sensitivity is defined as the concentration of ferritin that corresponds to the RLUs that are two standard deviations greater than the mean RLUs of 20 replicate determinations of the Ferritin zero standard.

Method Comparison

For 229 serum samples in the range of 2.39 to 1507.8 ng/mL (5.26 to 3317.2 pmol/L), the relationship between the ADVIA Centaur CP Ferritin assay and the ACS:180 Ferritin assay is described by the equation:

ADVIA Centaur CP Ferritin = 0.98 (ACS:180 Ferritin) + 4.69 ng/mL

Correlation coefficient (r) = 0.995

For 231 serum samples in the range of 1.43 to 1501.8 ng/mL (3.15 to 3304 pmol/L), the relationship between the ADVIA Centaur CP Ferritin assay and the ADVIA Centaur Ferritin assay is described by the equation:

ADVIA Centaur CP Ferritin = 1.00 (ADVIA Centaur Ferritin) - 1.84 ng/mL

Correlation coefficient (r) = 0.992

Dilution Recovery

Three human serum samples in the range of 311.5 to 957.2 ng/mL (685.4 to 2106 pmol/L) of ferritin were diluted 1:2, 1:4, 1:8, and 1:16 with Multi-Diluent 1 and assayed for recovery and parallelism. The recoveries ranged from 99% to 116% with a mean of 105.7%.

Sample	Dilution	Observed (ng/mL)	Expected (ng/mL)	Observed (pmol/L)	Expected (pmol/L)	Recovery %
1	—	311.5		685.3		
	1:2	156.9	155.8	345.2	342.8	100.7
	1:4	80.24	77.90	176.5	171.4	103.0
	1:8	43.53	38.94	95.8	85.7	111.8
	1:16	22.62	19.47	49.8	42.8	116.2
	Mean					107.9
2	—	487.0		1071.4		
	1:2	241.8	243.5	532.0	535.7	99.3
	1:4	126.3	121.8	277.9	268.0	103.7
	1:8	66.7	60.88	146.7	133.9	109.6
	1:16	33.3	30.44	73.3	67.0	109.4
	Mean					105.5
3	—	957.2		2105.8		
	1:2	494.5	478.6	1087.9	1052.9	103.3
	1:4	245.9	239.3	541.0	526.5	102.8
	1:8	126.5	119.7	278.3	263.3	105.7
	1:16	62.1	59.8	136.6	131.6	103.8
	Mean					103.9
Mean						**105.7**

Spiking Recovery

Varying amounts of ferritin were added to five samples with endogenous ferritin levels of 40.6 to 415.5 ng/mL (89.3 to 914.1 pmol/L). The recoveries ranged from 87.6% to 110% with a mean of 95.5%.

Sample	Amount Added (ng/mL)	Observed (ng/mL)	Amount Added (pmol/L)	Observed (pmol/L)	Recovery %
1	—	40.6	—	89.3	
	48.3	97.8	106.3	215.2	110.0
	181.2	219.1	398.6	482.0	98.8
	358.2	378.8	788.0	833.4	95.0
	712.4	751.8	1567.3	1654.0	99.8
	Mean				100.9
2	—	99.7	—	219.3	
	53.4	154.7	117.5	340.3	101.1
	186.2	265.4	409.6	583.9	92.8
	363.3	412.8	799.3	908.2	89.2
	717.5	769.1	1578.5	1692.0	94.1
	Mean				94.3
3	—	201.1	—	442.4	
	63.2	263.0	139.0	578.6	99.5
	196.0	347.7	431.2	764.9	87.6
	373.1	523.0	820.8	1150.6	91.1
	727.3	874.4	1600.1	1923.7	94.2
	Mean				93.1
4	—	270.6	—	595.3	
	70.4	339.8	154.9	747.6	99.7
	203.2	425.8	447.0	936.8	89.9
	380.3	617.1	836.7	1357.6	94.8
	734.5	902.7	1615.9	1985.9	89.8
	Mean				93.6
5	—	415.5	—	914.1	
	85.3	508.8	187.7	1119.4	101.6
	218.1	607.1	479.8	1335.6	95.8
	395.2	760.6	869.4	1673.3	93.8
	749.3	1062.0	1648.5	2336.4	91.2
	Mean				95.6
Mean					**95.5**

Spiking recovery testing was previously determined for the ACS:180 Ferritin Assay.

Precision

Precision was evaluated according to the NCCLS protocol EP5-A2.[9] According to this protocol, the assay was tested daily, for 5 to 20 days, using multiple reagent lots, on multiple systems across multiple sites. The system was calibrated immediately prior to the first test of day one. Assay results were calculated using the two-point calibration. The following results were obtained:

Mean (ng/mL)	Mean (pmol/L)	Within-run CV(%)	Between run CV(%)	Total CV(%)
58.0	127.7	4.0	3.6	5.3
150.5	331.1	3.6	3.9	5.3
336.4	740.1	3.9	4.2	5.8

Standardization

The ADVIA Centaur CP Ferritin assay standardization is traceable to World Health Organization 2nd International Standard (WHO 94/572). A comparison using 12 samples gave the following relationship:

$$\text{WHO} = 0.93\ (\text{ADVIA Centaur CP Ferritin}) + 3.48\ \text{ng/mL},\ r = 0.9998$$

Assigned values for calibrators and ranges of Ligand Plus controls are traceable to this standardization.

Technical Assistance

For customer support, please contact your local technical support provider or distributor.

References

1. Miale JB. Laboratory medicine: hematology. St. Louis: CV Mosby, 1982. p.388–415.
2. Schreiber WE. Iron, porphyrin, and bilirubin metabolism. In: Kaplan LA, Pesce AJ, editors. Clinical chemistry: theory, analysis, and correlation. 2nd ed. St. Louis: CV Mosby, 1989. p.496–511.
3. Vander AJ, Sherman JH, Luciano DS. Human physiology: the mechanisms of body function. New York: McGraw-Hill Inc., 1985. p.475.
4. National Committee for Clinical Laboratory Standards. Procedures for the handling and processing of blood specimens; approved guideline-third edition. NCCLS Document H18-A3; Wayne (PA): NCCLS; 2004.
5. Franco CD. Ferritin. In: Kaplan LA, Pesce AJ, editors. Methods in clinical chemistry. 2nd ed. St. Louis: CV Mosby, 1987. p.1240–2.
6. Boscato LM, Stuart MC. Heterophilic antibodies: a problem for all immunoassays. Clin Chem 1988;34:27–33.
7. National Committee for Clinical Laboratory Standards. Interference testing in clinical chemistry; approved guideline. NCCLS Document EP7-A. Wayne (PA):NCCLS; 2002.
8. National Committee for Clinical Laboratory Standards. How to define and determine reference intervals in the clinical laboratory; approved guideline-second edition. NCCLS Document C28-A2. Wayne (PA): NCCLS; 2000.
9. National Committee for Clinical Laboratory Standards. Evaluation of precision performance of clinical chemistry devices; approved guideline-second edition. NCCLS Document EP5-A2. Wayne (PA):NCCLS; 2004.

ADVIA Centaur, ReadyPack, and ACS:180 are trademarks of Siemens Medical Solutions Diagnostics.

© 2007 Siemens Medical Solutions Diagnostics. All rights reserved.

US Pats 4,745,181; 4,918,192; 5,110,932; 5,609,822; 5,788,928

Origin: US

Siemens Medical Solutions Diagnostics
Tarrytown, NY 10591-5097 USA

EC REP Siemens Medical Solutions Diagnostics
Europe Limited
Chapel Lane, Swords, Co. Dublin, Ireland

Siemens Medical Solutions
Diagnostics Pty Ltd
ABN 65 007 436 651
885 Mountain Highway
Bayswater Victoria 3153
Australia

Siemens Medical Solutions Diagnostics
3-20-14 Higashi-Gotanda, Shinagawa
Tokyo, 141-8641, Japan

TSH

CE

Assay Summary

Sample Type	***Serum***
Sample Volume	***200 µL***
Calibrator	***B***
Sensitivity and Assay Range	***0.010 – 150 µIU/mL (mIU/L)***

Contents

REF	Contents	Number of Tests
08700387 (110734)	5 ReadyPack® primary reagent packs containing ADVIA Centaur® TSH Lite Reagent and Solid Phase ADVIA Centaur and ADVIA Centaur CP TSH Master Curve cards	500
or		
04911359 (110732)	1 ReadyPack primary reagent pack containing ADVIA Centaur TSH Lite Reagent and Solid Phase ADVIA Centaur and ADVIA Centaur CP TSH Master Curve cards	100

For a definition of symbols used in product labeling, please refer to the *Operator's Guide*.

Intended Use

For *in vitro* diagnostic use in the quantitative determination of thyroid-stimulating hormone (TSH, thyrotropin) in serum using the ADVIA Centaur CP System.

Materials Required But Not Provided

REF	Description	Contents
00652707	Calibrator B	6 vials of low calibrator CAL L 6 vials of high calibrator CAL H
or		
00649625	Calibrator B	2 vials of low calibrator CAL L 2 vials of high calibrator CAL H
01137199 (112351)	ADVIA Centaur Wash 1 WASH 1	2 x 1500 mL/pack

Optional Reagents

REF	Description	Contents
07907174 (110313)	ADVIA Centaur Multi-Diluent 1 M-DIL 1	6 ReadyPack ancillary reagent packs containing 25 mL/pack
or		
07293184 (110312)	ADVIA Centaur Multi-Diluent 1 M-DIL 1	2 ReadyPack ancillary reagent packs containing 25 mL/pack
09348792 (672177)	Multi-Diluent 1 M-DIL 1	50 mL/vial
07642456 (986000)	Ligand Plus 1, 2, 3 quality control material	5 x 5 mL CONTROL 1 5 x 5 mL CONTROL 2 5 x 5 mL CONTROL 3

18

REF	Description	Contents
07377973 (986400)	Ligand Plus 1, 2, 3 barcode labels	60/level
07554832 (672422)	TSH Master Curve Material	10 x 2 mL

Summary and Explanation of the Test

Thyroid-stimulating hormone is a glycoprotein with two non-covalently bound subunits. The alpha subunit is similar to those of follicle-stimulating hormone (FSH), human chorionic gonadotropin (hCG), and luteinizing hormone (LH).[1-4]

The beta subunit of TSH is unique, which results in the specific biochemical and immunological properties of this hormone.

TSH is synthesized and secreted by the anterior pituitary in response to a negative feedback mechanism involving concentrations of FT_3 (free T_3) and FT_4 (free T_4). Additionally, the hypothalamic tripeptide, thyrotropin-releasing hormone (TRH), directly stimulates TSH production.

TSH interacts with specific cell receptors on the thyroid cell surface and exerts two main actions. The first action is to stimulate cell reproduction and hypertrophy. Secondly, TSH stimulates the thyroid gland to synthesize and secrete T_3 and T_4.

The ability to quantitate circulating levels of TSH is important in evaluating thyroid function. It is especially useful in the differential diagnosis of primary (thyroid) from secondary (pituitary) and tertiary (hypothalamus) hypothyroidism. In primary hypothyroidism, TSH levels are significantly elevated, while in secondary and tertiary hypothyroidism, TSH levels are low.

TRH stimulation differentiates secondary and tertiary hypothyroidism by observing the change in patient TSH levels. Typically, the TSH response to TRH stimulation is absent in cases of secondary hypothyroidism, and normal to exaggerated in tertiary hypothyroidism.

Historically, TRH stimulation has been used to confirm primary hyperthyroidism, indicated by elevated T_3 and T_4 levels and low or undetectable TSH levels. TSH assays with increased sensitivity and specificity provide a primary diagnostic tool to differentiate hyperthyroid from euthyroid patients.

Assay Principle

The ADVIA Centaur CP TSH assay is a two-site sandwich immunoassay using direct chemiluminometric technology, which uses constant amounts of two antibodies. The first antibody, in the Lite Reagent, is a monoclonal mouse anti-TSH antibody labeled with acridinium ester. The second antibody, in the Solid Phase, is a polyclonal sheep anti-TSH antibody which is covalently coupled to paramagnetic particles.

The system automatically performs the following steps:

- dispenses 200 µL of sample into a cuvette
- dispenses 50 µL of Lite Reagent and 225 µL of Solid Phase and incubates for 9.7 minutes at 37°C
- separates, aspirates, and washes the cuvettes with Wash 1
- dispenses 300 µL each of Acid Reagent (R1) and Base Reagent (R2) to initiate the chemiluminescent reaction
- reports results according to the selected option, as described in the system operating instructions or in the online help system

A direct relationship exists between the amount of TSH present in the patient sample and the amount of relative light units (RLUs) detected by the system.

Specimen Collection and Handling

Serum is the recommended sample type for this assay.

The following recommendations for handling and storing blood samples are furnished by the National Committee for Clinical Laboratory Standards (NCCLS):[5]

- Collect all blood samples observing universal precautions for venipuncture.
- Allow samples to clot adequately before centrifugation.
- Keep tubes stoppered and upright at all times.
- Do not use samples that have been stored at room temperature for longer than 8 hours.
- Tightly cap and refrigerate specimens at 2 to 8°C if the assay is not completed within 8 hours.
- Freeze samples at or below -20°C if the sample is not assayed within 48 hours.
- Freeze samples only once and mix thoroughly after thawing.

Before placing samples on the system ensure that:

- Samples are free of fibrin or other particulate matter.
- Samples are free of bubbles.

Reagents

Store the reagents upright at 2–8°C.
Mix all primary reagent packs by hand before loading them onto the system. Visually inspect the bottom of the reagent pack to ensure that all particles are dispersed and resuspended. For detailed information about preparing the reagents for use, refer to the *Operator's Guide*.

Reagent Pack	Reagent	Volume	Ingredients	Storage	Stability
ADVIA Centaur TSH ReadyPack primary reagent pack	Lite Reagent	5.0 mL/ reagent pack	monoclonal mouse anti-TSH antibody (~333 ng/mL) labeled with acridinium ester in phosphate buffered saline with sodium azide (< 0.1%) and preservatives	2–8°C	until the expiration date on the pack label. For onboard stability, refer to *Onboard Stability and Calibration Interval.*
	Solid Phase	22.5 mL/ reagent pack	polyclonal sheep anti-TSH antibody (~43 µg/mL) covalently coupled to paramagnetic particles in phosphate buffered saline with protein stabilizers, sodium azide (0.11%), and preservatives	2–8°C	until the expiration date on the pack label. For onboard stability, refer to *Onboard Stability and Calibration Interval.*
ADVIA Centaur M-DIL 1 ReadyPack ancillary reagent pack	Multi-Diluent 1	25.0 mL/ reagent pack	equine serum with sodium azide (0.1%) and preservatives	2–8°C	until the expiration date on the pack label or 28 consecutive days after accessing the ancillary reagent pack

R22 S28 **Harmful!** Harmful if swallowed. After contact with skin, wash immediately with plenty of soap and water. **Contains:** sodium azide; Solid Phase

CAUTION: This device contains material of animal origin and should be handled as a potential carrier and transmitter of disease.

NOTE: Sodium azide can react with copper and lead plumbing to form explosive metal azides. On disposal, flush reagents with a large volume of water to prevent the buildup of azides, if disposal into a drain is in compliance with federal, state, and local requirements.

20

For *In Vitro* Diagnostic Use.

Loading Reagents

Ensure that the system has sufficient primary and ancillary reagent packs. For detailed information about preparing the system, refer to the system operating instructions or to the online help system.

Mix all primary reagent packs by hand before loading them onto the system. Visually inspect the bottom of the reagent pack to ensure that all particles are dispersed and resuspended. For detailed information about preparing the reagents for use, refer to the *Operator's Guide*.

Load the primary reagent packs in the primary reagent area. The arrows on the end label can be used as a placement guide. However left, center, and right placement of the primary reagent packs is not required because there is only one reagent probe on the ADVIA Centaur CP System. The system automatically mixes the primary reagent packs to maintain homogeneous suspension of the reagents. For detailed information about loading reagents, refer to the system operating instructions or to the online help system.

If automatic dilution of a sample is required, load ADVIA Centaur Multi-Diluent 1 in the ancillary reagent area.

Onboard Stability and Calibration Interval

Onboard Stability	Calibration Interval
21 days	28 days

Additionally, the ADVIA Centaur CP TSH assay requires a two-point calibration:

- when changing lot numbers of primary reagent packs
- when replacing system components
- when quality control results are repeatedly out of range

NOTE:

- Discard the primary reagent packs at the end of the onboard stability interval.
- Do not use reagents beyond the expiration date.

Master Curve Calibration

The ADVIA Centaur CP TSH assay requires a Master Curve calibration when using a new lot number of Lite Reagent and Solid Phase. For each new lot number of Lite Reagent and Solid Phase, use the barcode reader or keyboard to enter the Master Curve values on the system. The Master Curve card contains the Master Curve values. For detailed information about entering calibration values, refer to the system operating instructions or to the online help system.

Quality Control

For detailed information about entering quality control values, refer to the system operating instructions or to the online help system.

To monitor system performance and chart trends, as a minimum requirement, two levels of quality control material should be assayed on each day that samples are analyzed. Quality control samples should also be assayed when performing a two-point calibration. Treat all quality control samples the same as patient samples.

For quality control of the ADVIA Centaur CP TSH assay, use Ligand Plus or an equivalent quality control material. Refer to the quality control product insert for the suggested Expected Values. If the quality control results do not fall within the Expected Values or within the laboratory's established values, do not report results. Take the following actions:

- Verify that the materials are not expired.
- Verify that required maintenance was performed.
- Verify that the assay was performed according to the instructions for use.
- Rerun the assay with fresh quality control samples.
- If necessary, contact your local technical support provider or distributor for assistance.

Sample Volume

This assay requires 200 µL of sample for a single determination. This volume does not include the unusable volume in the sample container or the additional volume required when performing duplicates or other tests on the same sample. For detailed information about determining the minimum required volume, refer to the system operating instructions or to the online help system.

Assay Procedure

For detailed procedural information, refer to the system operating instructions or to the online help system.

Procedural Notes

Calculations

For detailed information about how the system calculates results, refer to the system operating instructions or to the online help system.

The system reports serum TSH results in µIU/mL (common units) or mIU/L (SI units), depending on the units defined when setting up the assay. The conversion formula is 1 µIU/mL = 1 mIU/L.

Dilutions

- Serum samples with TSH levels greater than 150 µIU/mL (mIU/L) must be diluted and retested to obtain accurate results.
- Patient samples can be automatically diluted by the system or prepared manually.
- For automatic dilutions, ensure that ADVIA Centaur Multi-Diluent 1 is loaded and set the system parameters as follows:

  Dilution point: ≤ 150 µIU/mL (mIU/L)

  Dilution factor: 2, 5

  For detailed information about automatic dilutions, refer to the system operating instructions or to the online help system.
- Manually dilute the patient samples when patient results exceed the linearity of the assay using automatic dilution, or when laboratory protocol requires manual dilution.
- Use Multi-Diluent 1 to manually dilute patient samples, and then load the diluted sample in the sample rack, replacing the undiluted sample.

- Ensure that results are mathematically corrected for dilution. If a dilution factor is entered when scheduling the test, the system automatically calculates the result.

High Dose Hook Effect

Patient samples with high TSH levels can cause a paradoxical decrease in the RLUs (high dose hook effect). In this assay, patient samples with TSH levels as high as 2000 µIU/mL (mIU/L) will assay greater than 150 µIU/mL (mIU/L).

Disposal

Dispose of hazardous or biologically contaminated materials according to the practices of your institution. Discard all materials in a safe and acceptable manner, and in compliance with all federal, state, and local requirements.

Limitations

Heterophilic antibodies in human serum can react with reagent immunoglobulins, interfering with *in vitro* immunoassays.[6] Patients routinely exposed to animals or to animal serum products can be prone to this interference and anomalous values may be observed. Additional information may be required for diagnosis.

Serum specimens that are . . .	Have an insignificant effect on the assay up to . . .
hemolyzed	500 mg/dL of hemoglobin
lipemic	1000 mg/dL of triglycerides
icteric	40 mg/dL of bilirubin

Interference testing was determined according to NCCLS Document EP7-A.[7]

Expected Results

The expected results for the ACS:180® TSH assay were previously established. Data was obtained on 261 patients in the following categories: euthyroid (174), hypothyroid (39), and hyperthyroid (48). Based on a cumulative distribution analysis of this data, the following reference ranges were established:

Clinical Condition	TSH Range (µIU/mL) (mIU/L)
Euthyroid	0.35–5.50
Hyperthyroid	less than 0.35
Hypothyroid	greater than 5.50

These results were confirmed for the ADVIA Centaur CP TSH assay by analyzing 206 samples in the range of 0.01 to 141.43 µIU/mL (mIU/L). Refer to *Method Comparison*.

As with all *in vitro* diagnostic assays, each laboratory should determine its own reference range(s) for the diagnostic evaluation of patient results.[8]

Performance Characteristics

Specificity

The cross-reactivity of the assay with LH, FSH, and hCG was determined by adding these hormones to human sera containing TSH. The level of TSH in the human sera was then determined.

Cross-reactant	TSH Value without cross-reactant (µIU/mL) (mIU/L)	TSH Value with cross-reactant (µIU/mL) (mIU/L)
LH; 200 mIU/mL	0.36	0.35
	5.39	5.12
	20.82	19.79
FSH; 200 mIU/mL	0.35	0.33
	5.12	4.99
	20.44	21.11
hCG; 200,000 mIU/mL	0.40	0.41
	5.43	5.23
	21.86	20.67

Interference testing was previously determined for the ACS:180 TSH assay.

Sensitivity and Assay Range

The ADVIA Centaur CP TSH assay measures TSH concentrations up to 150 µIU/mL (mIU/L) with a minimum detectable concentration (analytical sensitivity) of 0.010 µIU/mL (mIU/L). Analytical sensitivity is defined as the concentration of TSH that corresponds to the RLUs that are two standard deviations greater than the mean RLUs of 20 replicate determinations of the TSH zero standard.

Method Comparison

For 202 samples in the range of 0.01 to 141.43 µIU/mL (mIU/L), the relationship between the ADVIA Centaur CP TSH assay and the ACS:180 TSH assay is described by the equation:

ADVIA Centaur CP TSH = 0.97 (ACS:180 TSH) + 0.00 µIU/mL

Correlation coefficient (r) = 0.995

Passing & Bablok method comparison statistics:

	Coefficient	95% CI
Intercept	0.00	-0.02 to 0.01
Slope	0.97	0.96 to 0.99

For 206 samples in the range of 0.01 to 143.78 µIU/mL (mIU/L), the relationship between the ADVIA Centaur CP TSH assay and the ADVIA Centaur TSH assay is described by the equation:

ADVIA Centaur CP TSH = 0.97 (ADVIA Centaur TSH) + 0.01 µIU/mL

Correlation coefficient (r) = 0.994

Passing & Bablok method comparison statistics:

	Coefficient	95% CI
Intercept	0.01	0.00 to 0.01
Slope	0.97	0.96 to 0.98

Dilution Recovery

Five human serum samples in the range of 82.81 to 145.04 µIU/mL (mIU/L) of TSH were diluted 1:2, 1:4, 1:8, and 1:16 with Multi-Diluent 1 and assayed for recovery and parallelism. The recoveries ranged from 87.0% to 103.0% with a mean of 95.5%.

Sample	Dilution	Observed (µIU/mL) (mIU/L)	Expected (µIU/mL) (mIU/L)	Recovery %
1	—	92.41		
	1:2	46.44	46.21	100.5
	1:4	22.79	23.10	98.6
	1:8	11.48	11.55	99.4
	1:16	5.46	5.78	94.5
	Mean			98.3
2	—	104.70		
	1:2	52.96	52.35	101.2
	1:4	25.68	26.18	98.1
	1:8	12.68	13.09	96.9
	1:16	6.06	6.54	92.6
	Mean			97.2
3	—	82.81		
	1:2	42.65	41.41	103.0
	1:4	20.27	20.70	97.9
	1:8	10.17	10.35	98.3
	1:16	4.94	5.18	95.4
	Mean			98.7
4	—	145.04		
	1:2	65.51	72.52	90.3
	1:4	34.24	36.26	94.4
	1:8	17.31	18.13	95.5
	1:16	8.78	9.07	96.9
	Mean			94.3
5	—	120.4		
	1:2	58.3	60.19	96.9
	1:4	29.3	30.09	97.4
	1:8	14.1	15.05	93.6
	1:16	7.1	7.52	94.0
	Mean			95.5
6	—	142.76		
	1:2	64.21	71.38	90.0
	1:4	32.15	35.69	90.1
	1:8	16.07	17.85	90.1
	1:16	7.76	8.92	87.0
	Mean			89.3
Mean				**95.5**

Spiking Recovery

Varying amounts of TSH were added to four samples with endogenous TSH levels of 0.06 to 0.76 µIU/mL (mIU/L). The recoveries ranged from 83.3% to 116.4% with a mean of 96.7%.

Sample	Amount Added (µIU/mL) (mIU/L)	Observed (µIU/mL) (mIU/L)	Recovery %
1	—	0.06	
	5.17	6.08	116.4
	10.35	10.45	100.4
	20.69	19.86	95.7
	51.74	47.10	90.9
	93.13	95.93	102.9
	155.22	129.31	83.3
	Mean		98.3
2	—	0.76	
	5.17	6.05	102.3
	10.35	10.27	91.9
	20.69	18.84	87.4
	51.74	47.64	90.6
	93.13	91.18	97.1
	155.22	132.56	84.9
	Mean		92.4
3	—	0.07	
	5.17	5.25	100.2
	10.35	10.13	97.2
	20.69	20.62	99.3
	51.74	48.93	94.4
	93.13	93.20	100.0
	155.22	138.77	89.4
	Mean		96.8
4	—	0.33	
	5.17	5.77	105.2
	10.35	11.08	103.9
	20.69	20.29	96.5
	51.74	52.75	101.3
	93.13	89.24	95.5
	155.22	146.08	93.9
	Mean		99.4
Mean			**96.7**

Spiking recovery testing was previously determined for the ADVIA Centaur TSH Assay.

Precision

Precision was evaluated according to the NCCLS protocol EP5-A2.[9] According to this protocol, the assay was tested daily, for 5 to 20 days, using multiple reagent lots, on multiple systems across multiple sites. The system was calibrated immediately prior to the first test of day one. Assay results were calculated using the two-point calibration. The following results were obtained:

Mean (µIU/mL) (mIU/L)	Within-run CV(%)	Between run CV(%)	Total CV(%)
0.68	4.8	4.4	6.5
4.61	3.9	3.1	5.0
17.35	3.1	4.2	5.2

Standardization

The ADVIA Centaur CP TSH assay standardization is traceable to World Health Organization (WHO) 3rd International Standard for human TSH (IRP 81/565). A comparison over the full assay range gave the following correlation:

$$\text{ADVIA Centaur CP TSH} = 0.95\ (\text{WHO}) + 0.51\ \text{IU/mL}$$

$$r = 1.00$$

Assigned values for calibrators and ranges of Ligand Plus controls are traceable to this standardization.

Technical Assistance

For customer support, please contact your local technical support provider or distributor.

References

1. Chen IW, Sperling MI. Thyroxine. In: Kaplan LA, Pesce AJ, editors. Clinical chemistry: theory, analysis, and correlation. 2nd ed. St. Louis: CV Mosby, 1989. p.956–9.
2. Fernandez-Ulloa M, Maxon HR. Thyroid. In: Kaplan LA, Pesce AJ, editors. Clinical chemistry: theory, analysis, and correlation. 2nd ed. St. Louis: CV Mosby, 1989. p.620–37.
3. Watts NB, Keffer JH. Practical endocrine diagnosis. 3rd ed. Philadelphia: Lea and Febiger, 1982. p.1–27, 77–96.
4. Chattoraj SC, Watts NB. Endocrinology. In: Tietz NW, editor. Fundamentals of clinical chemistry. 3rd ed. Philadelphia: WB Saunders, 1987. p.550–1.
5. National Committee for Clinical Laboratory Standards. Procedures for the handling and processing of blood specimens; approved guideline-third edition. NCCLS Document H18-A3; Wayne (PA): NCCLS; 2004.
6. Boscato LM, Stuart MC. Heterophilic antibodies: a problem for all immunoassays. Clin Chem. 1988;34:27–33.
7. National Committee for Clinical Laboratory Standards. Interference testing in clinical chemistry; approved guideline. NCCLS Document EP7-A. Wayne (PA):NCCLS; 2002.
8. National Committee for Clinical Laboratory Standards. How to define and determine reference intervals in the clinical laboratory; approved guideline-second edition. NCCLS Document C28-A2. Wayne (PA): NCCLS; 2000.
9. National Committee for Clinical Laboratory Standards. Evaluation of precision performance of clinical chemistry devices; approved guideline-second edition. NCCLS Document EP5-A2. Wayne (PA):NCCLS; 2004.

ADVIA Centaur, ReadyPack, and ACS:180 are trademarks of Siemens Medical Solutions Diagnostics.

© 2007 Siemens Medical Solutions Diagnostics. All rights reserved.

US Pats 4,745,181; 4,918,192; 5,110,932; 5,609,822; 5,788,928

Origin: US

Siemens Medical Solutions Diagnostics
Tarrytown, NY 10591-5097 USA

EC REP Siemens Medical Solutions Diagnostics
Europe Limited
Chapel Lane, Swords, Co. Dublin, Ireland

Siemens Medical Solutions
Diagnostics Pty Ltd
ABN 65 007 436 651
885 Mountain Highway
Bayswater Victoria 3153
Australia

Siemens Medical Solutions Diagnostics
3-20-14 Higashi-Gotanda, Shinagawa
Tokyo, 141-8641, Japan

T4

CE

Assay Summary

Sample Type	***Serum***
Sample Volume	***25 µL***
Calibrator	***A***
Sensitivity and Assay Range	***0.3 – 30 µg/dL (3.9 – 387 nmol/L)***

Contents

REF	Contents	Number of Tests
09236439 (110736)	5 ReadyPack® primary reagent packs containing ADVIA Centaur® T4 Lite Reagent and Solid Phase ADVIA Centaur and ADVIA Centaur CP T4 Master Curve cards	500
or		
08074354 (110735)	1 ReadyPack primary reagent pack containing ADVIA Centaur T4 Lite Reagent and Solid Phase ADVIA Centaur and ADVIA Centaur CP T4 Master Curve cards	100

For a definition of symbols used in product labeling, please refer to the *Operator's Guide.*

Intended Use

For *in vitro* diagnostic use in the quantitative determination of thyroxine (T_4) in serum using the ADVIA Centaur CP System.

Materials Required But Not Provided

REF	Description	Contents
03147078	Calibrator A	6 vials of low calibrator CAL L
(672180)		6 vials of high calibrator CAL H
or		
08860910	Calibrator A	2 vials of low calibrator CAL L
(672170)		2 vials of high calibrator CAL H
01514596 (110329)	ADVIA Centaur T3/T4/VB12 Ancillary Reagent ANC	6 ReadyPack ancillary reagent packs containing 25 mL/pack
or		
03644012 (110328)	ADVIA Centaur T3/T4/VB12 Ancillary Reagent ANC	2 ReadyPack ancillary reagent packs containing 25 mL/pack

Optional Reagents

REF	Description	Contents
04889086 (672202)	T4 Diluent DIL	10 mL/vial
07642456 (986000)	Ligand Plus 1, 2, 3 quality control material	5 x 5 mL CONTROL 1 5 x 5 mL CONTROL 2 5 x 5 mL CONTROL 3
07377973 (986400)	Ligand Plus 1, 2, 3 barcode labels	60/level
01463266 (672420)	T4 Master Curve Material	6 x 1 mL

Summary and Explanation of the Test

Thyroxine (3,5,3',5'-L-tetraiodothyronine, T_4) is a hormone synthesized and secreted by the thyroid gland, and plays an important role in regulating metabolism. T_4 is secreted into the circulation in response to the pituitary hormone TSH (thyroid stimulating hormone). The secretion of T_4 is regulated by a negative feedback mechanism involving the thyroid gland, hypothalamus, and pituitary gland.[1,3]

In the circulation 99.95% of T_4 is reversibly bound to transport proteins, primarily thyroxine binding globulin (TBG) and to a lesser extent albumin and prealbumin. Unbound or free T_4 is metabolically active and bound T_4 is metabolically inactive, acting as a reserve.[3,4]

TBG concentrations remain reasonably constant in healthy individuals. However, pregnancy, excess estrogens, androgens, anabolic steroids, and glucocorticoids are known to alter TBG levels and may cause false thyroid values for thyroid function tests. Altered T_4 levels in these situations may not accurately reflect thyroid status.[1-4]

Primary malfunction of the thyroid gland may result in excessive (hyper) or below normal (hypo) release of T_4 or T_3. In addition, as thyroid function is directly affected by TSH, malfunction of the pituitary or the hypothalamus influences the thyroid gland activity. Disease in any portion of the thyroid-pituitary-hypothalamus system may influence the levels of T_4 and T_3 in the blood.

Assay Principle

The ADVIA Centaur CP T4 assay is a competitive immunoassay using direct chemiluminescent technology. T_4 in the patient sample competes with T_4, which is covalently coupled to paramagnetic particles in the Solid Phase, for a limited amount of acridinium ester-labeled monoclonal mouse anti-T_4 antibody in the Lite Reagent.

The system automatically performs the following steps:

- dispenses 25 µL of sample and 50 µL of T3/T4/VB12 Ancillary Reagent into a cuvette and incubates for 4.7 minutes at 37°C
- dispenses 250 µL of Solid Phase and 100 µL of Lite Reagent and incubates for 9.7 minutes at 37°C
- separates, aspirates, and washes the cuvettes with Wash 1
- dispenses 300 µL each of Acid Reagent (R1) and Base Reagent (R2) to initiate the chemiluminescent reaction
- reports results according to the selected option, as described in the system operating instructions or in the online help system

An inverse relationship exists between the amount of T_4 present in the patient sample and the amount of relative light units (RLUs) detected by the system.

Specimen Collection and Handling

Serum is the recommended sample type for this assay.

The following recommendations for handling and storing blood samples are furnished by the National Committee for Clinical Laboratory Standards (NCCLS):[5]

- Collect all blood samples observing universal precautions for venipuncture.
- Allow samples to clot adequately before centrifugation.
- Keep tubes stoppered and upright at all times.
- Do not use samples that have been stored at room temperature for longer than 8 hours.
- Tightly cap and refrigerate specimens at 2 to 8°C if the assay is not completed within 8 hours.
- Freeze samples at or below -20°C if the sample is not assayed within 48 hours.
- Freeze samples only once and mix thoroughly after thawing.

Before placing samples on the system ensure that:

- Samples are free of fibrin or other particulate matter.
- Samples are free of bubbles.

Reagents

UP Store the reagents upright at 2–8°C.
Mix all primary reagent packs by hand before loading them onto the system. Visually inspect the bottom of the reagent pack to ensure that all particles are dispersed and resuspended. For detailed information about preparing the reagents for use, refer to the *Operator's Guide*.

Reagent Pack	Reagent	Volume	Ingredients	Storage	Stability
ADVIA Centaur T4 ReadyPack primary reagent pack	Lite Reagent	10.0 mL/ reagent pack	monoclonal mouse anti-T_4 antibody (~1 µg/mL) labeled with acridinium ester in sodium barbital buffer with protein stabilizers, ANS, EDTA, and sodium azide (0.1%)	2–8°C	until the expiration date on the pack label. For onboard stability, refer to *Onboard Stability and Calibration Interval.*
	Solid Phase	25.0 mL/ reagent pack	T_4 (~0.2 µg/mL) covalently coupled to paramagnetic particles in sodium barbital buffer with protein stabilizers, ANS, EDTA, and sodium azide (0.1%)	2–8°C	until the expiration date on the pack label. For onboard stability, refer to *Onboard Stability and Calibration Interval.*
ADVIA Centaur T3/T4/VB12 ANC ReadyPack ancillary reagent pack	T3/T4/VB12 Ancillary Reagent	25.0 mL/ reagent pack	0.4N sodium hydroxide	2–8°C	until the expiration date on the pack label or 14 consecutive days after accessing the ancillary reagent pack
T4 DIL	T4 Diluent	10 mL/ vial	human plasma and sodium azide (0.1 %)	2-8°C	until expiration date on the vial label

R22 S28 **Harmful!** Harmful if swallowed. After contact with skin, wash immediately with plenty of soap and water. **Contains:** sodium azide; Lite Reagent, Solid Phase

R36/38 S26 S37/39 **Irritant!** Irritating to eyes and skin. In case of contact with eyes, rinse immediately with plenty of water and seek medical advice. Wear suitable gloves and eye/face protection. **Contains:** sodium hydroxide; Ancillary Reagent

CAUTION! POTENTIAL BIOHAZARD: Contains human source material. While each human serum or plasma donor unit used in the manufacture of this product was tested by FDA-approved methods and found nonreactive for hepatitis B surface antigen (HBsAg), antibody to hepatitis C (HCV), and antibody to HIV-1/2, all products manufactured using human source material should be handled as potentially infectious. Because no test method can offer complete assurance that hepatitis B or C viruses, HIV, or other infectious agents are absent, these products should be handled according to established good laboratory practices.[6-8]

CAUTION: This device contains material of animal origin and should be handled as a potential carrier and transmitter of disease.

NOTE: Sodium azide can react with copper and lead plumbing to form explosive metal azides. On disposal, flush reagents with a large volume of water to prevent the buildup of azides, if disposal into a drain is in compliance with federal, state, and local requirements.

For *In Vitro* Diagnostic Use.

Loading Reagents

Ensure that the system has sufficient primary and ancillary reagent packs. For detailed information about preparing the system, refer to the system operating instructions or to the online help system.

Mix all primary reagent packs by hand before loading them onto the system. Visually inspect the bottom of the reagent pack to ensure that all particles are dispersed and resuspended. For detailed information about preparing the reagents for use, refer to the *Operator's Guide*.

Load the primary reagent packs in the primary reagent area. The arrows on the end label can be used as a placement guide. However left, center, and right placement of the primary reagent packs is not required because there is only one reagent probe on the ADVIA Centaur CP System. The system automatically mixes the primary reagent packs to maintain homogeneous suspension of the reagents. Load the T3/T4/VB12 Ancillary Reagent ReadyPack reagent pack in the ancillary reagent area. For detailed information about loading reagents, refer to the system operating instructions or to the online help system.

Onboard Stability and Calibration Interval

Perform a calibration every time you load a fresh primary reagent pack.

Onboard Stability	Calibration Interval
28 days	4 days

Additionally, the ADVIA Centaur CP T4 assay requires a two-point calibration:

- when changing lot numbers of primary reagent packs
- when replacing system components
- when quality control results are repeatedly out of range

NOTE:

- Discard the primary reagent pack at the end of the onboard stability interval.
- Do not use reagents beyond the expiration date.

Master Curve Calibration

The ADVIA Centaur CP T4 assay requires a Master Curve calibration when using a new lot number of Lite Reagent and Solid Phase. For each new lot number of Lite Reagent and Solid Phase, use the barcode reader or keyboard to enter the Master Curve values on the system. The Master Curve card contains the Master Curve values. For detailed information about entering Master Curve values, refer to the system operating instructions or to the online help system.

Quality Control

For detailed information about entering quality control values, refer to the system operating instructions or to the online help system.

To monitor system performance and chart trends, as a minimum requirement, two levels of quality control material should be assayed on each day that samples are analyzed. Quality control samples should also be assayed when performing a two-point calibration. Treat all quality control samples the same as patient samples.

For quality control of the ADVIA Centaur CP T4 assay, use Ligand Plus or an equivalent quality control material. Refer to the quality control product insert for the suggested Expected Values. If the quality control results do not fall within the Expected Values or within the laboratory's established values, do not report results. Take the following actions:

- Verify that the materials are not expired.
- Verify that required maintenance was performed.
- Verify that the assay was performed according to the instructions for use.
- Rerun the assay with fresh quality control samples.
- If necessary, contact your local technical support provider or distributor for assistance.

Sample Volume

This assay requires 25 µL of sample for a single determination. This volume does not include the unusable volume in the sample container or the additional volume required when performing duplicates or other tests on the same sample. For detailed information about determining the minimum required volume, refer to the system operating instructions or to the online help system.

Assay Procedure

For detailed procedural information, refer to the system operating instructions or to the online help system.

Procedural Notes

Calculations

For detailed information about how the system calculates results, refer to the system operating instructions or to the online help system.

The system reports T_4 results in µg/dL (common units) or nmol/L (SI units), depending on the units defined when setting up the assay. The conversion formula is 1 µg/dL = 12.9 nmol/L.

Dilutions

- Serum samples with T_4 levels greater than 30 µg/dL (387 nmol/L) must be diluted and retested to obtain accurate results.
- The system does not run onboard dilutions for the ADVIA Centaur CP T4 assay. Use T4 Diluent to dilute samples. Prepare manual dilutions.
- If dilution is required, use T4 Diluent to manually dilute patient samples, and then load the diluted sample on the sample tray, replacing the undiluted sample.
- Ensure that results are mathematically corrected for dilution. If a dilution factor is entered when scheduling the test, the system automatically calculates the result.

Disposal

Dispose of hazardous or biologically contaminated materials according to the practices of your institution. Discard all materials in a safe and acceptable manner, and in compliance with all federal, state, and local requirements.

Limitations

The anticonvulsant drug phenytoin may interfere with total and free T_4 levels due to competition for TBG binding sites.

Heterophilic antibodies in human serum can react with reagent immunoglobulins, interfering with in vitro immunoassays.[9] Patients routinely exposed to animals or to animal serum products can be prone to this interference and anomalous values can be observed. Additional information may be required for diagnosis.

Serum specimens that are . . .	Have an insignificant effect on the assay up to . . .
hemolyzed	500 mg/dL of hemoglobin
lipemic	1000 mg/dL of triglyceride
icteric	20 mg/dL of bilirubin

Interference testing was determined according to NCCLS Document EP7-A.[10]

Expected Results

The expected results for the ACS:180® T4 assay were previously established. Data was obtained on serum samples from 150 apparently healthy individuals. Ninety-five percent of the T_4 values for these individuals fell in the range of 4.5 to 10.9 µg/dL (58.1 to 140.6 nmol/L), with a mean of 7.0 µg/dL (90.3 nmol/L) and overall range of 3.2 to 12.6 µg/dL (41.3 to 162.5 nmol/L).

These results were confirmed for the ADVIA Centaur CP T4 assay by analyzing 251 samples in the range of 0.51 to 20.36 µg/dL (6.58 to 262.60 nmol/L). Refer to *Method Comparison*.

In addition, samples from a number of diagnosed hypothyroid, hyperthyroid, pregnant euthyroid, and sick euthyroid patients were included in the study.* The means and ranges of these populations were as follows:

Category	N	Mean (µg/dL)	95th Percentile (µg/dL)	Mean (nmol/L)	95th Percentile (nmol/L)
Hypothyroid	48	2.9	0.0–5.5	37.4	0.0–71.0
Hyperthyroid	44	14.1	10.8–19.1	181.9	139.3–246.4
Pregnant Euthyroid	22	8.5	6.4–10.7	109.6	82.6–138.0
Sick Euthyroid	26	5.3	1.9–13.3	68.4	24.5–171.6

* Data on file at Siemens Medical Solutions Diagnostics, available upon request.

As with all *in vitro* diagnostic assays, each laboratory should determine its own reference range(s) for the diagnostic evaluation of patient results.[11]

Performance Characteristics

Specificity

The cross-reactivity of the assay with a substance can be expressed as the ratio of

- the amount of T_4 required to displace 50% of the T4 Solid Phase from the labeled anti-T_4, and

35

- the amount of the cross-reactant to give the same 50% displacement

Cross-reactant	% Cross-reactivity
Monoiodotyrosine	< 0.03
Diiodotyrosine	< 0.03
3,5-Diiodo-L-thyronine	< 0.03
D-Triiodothyronine	0.40
L-Triiodothyronine	1.2
D-Thyroxine	57.7
Reverse Triiodothyronine	2.7

The following substances were added to serum samples containing different levels of T_4. When tested against the appropriate control, the percent change was noted. The table below shows the mean percent change for each set of samples with T_4 values in the range of 4.94 to 18.65 µg/dL (63.7 to 240.6 nmol/L).

Substance	Amount Added (mg/dL)	% Change
Propylthiouracil	4.0	–3.3
Methimazole	0.4	+0.5
Phenylbutazone	15.0	+4.0
Phenytoin	20.0	–0.5
Sodium salicylate	50.0	+1.8
Aspirin	50.0	+1.5

Interference testing was previously determined for the ACS:180 T4 assay.

Sensitivity and Assay Range

The ADVIA Centaur CP T4 assay measures T4 concentrations up to 30 µg/dL (387 nmol/L) with a minimum detectable concentration (analytical sensitivity) of 0.3 µg/dL (3.9 nmol/L). Analytical sensitivity is defined as the concentration of T4 that corresponds to the RLUs that are two standard deviations less than the mean RLUs of 20 replicate determinations of the T4 zero standard.

Method Comparison

For 251 samples in the range of 0.51 to 20.36 µg/dL (6.58 to 262.60 nmol/L), the relationship between the ADVIA Centaur CP T4 assay and the ACS:180 T4 assay is described by the equation:

ADVIA Centaur CP T4 = 1.02 (ACS:180 T4) - 0.06 µg/dL

Correlation coefficient (r) = 0.977

For 268 samples in the range of 0.49 to 19.92 µg/dL (6.32 to 256.97 nmol/L), the relationship between the ADVIA Centaur CP T4 assay and the ADVIA Centaur T4 assay is described by the equation:

ADVIA Centaur CP T4 = 1.01 (ADVIA Centaur T4) - 0.34 µg/dL

Correlation coefficient (r) = 0.986

Dilution Recovery

Five human serum samples in the range of 25.24 to 29.34 µg/dL (325.6 to 378.5 nmol/L) of T_4 were diluted 1:2, 1:4, and 1:8 with T4 Diluent and assayed for recovery and parallelism. The recoveries ranged from 88.8% to 104.9% with a mean of 98.6%.

Sample	Dilution	Observed (µg/dL)	Expected (µg/dL)	Observed (nmol/L)	Expected (nmol/L)	Recovery %
1	—	26.45		341.21		
	1:2	13.54	13.23	174.67	170.60	102.4
	1:4	6.52	6.61	84.11	85.30	98.6
	1:8	3.10	3.31	39.99	42.65	93.8
	Mean					98.2
2	—	29.34		378.49		
	1:2	15.10	14.67	194.79	189.24	102.9
	1:4	7.21	7.34	93.01	94.62	98.3
	1:8	3.64	3.67	46.96	47.31	99.3
	Mean					100.2
3	—	25.77		332.43		
	1:2	12.85	12.89	165.77	166.22	99.7
	1:4	6.00	6.44	77.40	83.11	93.1
	1:8	2.86	3.22	36.89	41.55	88.8
	Mean					93.9
4	—	27.10		349.59		
	1:2	13.91	13.55	179.44	174.80	102.7
	1:4	6.61	6.78	85.27	87.40	97.6
	1:8	3.18	3.39	41.02	43.70	93.9
	Mean					98.0
5	—	25.24		325.60		
	1:2	13.24	12.62	170.80	162.80	104.9
	1:4	6.33	6.31	81.66	81.40	100.3
	1:8	3.06	3.16	39.47	40.70	97.0
	Mean					100.7
6	—	25.48		328.69		
	1:2	12.97	12.74	167.31	164.35	101.8
	1:4	6.33	6.37	81.66	82.17	99.4
	1:8	2.90	3.19	37.41	41.09	91.1
	Mean					100.6
Mean						**98.6**

Spiking Recovery

Varying amounts of T_4 were added to six samples with endogenous T_4 levels of 0 to 6.5 µg/dL (0 to 83.9 nmol/L). The recoveries ranged from 92.0% to 112.5% with a mean of 102.6%.

Sample	Amount Added (µg/dL)	Observed (µg/dL)	Amount Added (nmol/L)	Observed (nmol/L)	Recovery %
1	—	2.1	—	27.1	
	5	7.6	64.5	98.0	110.0
	10	11.5	129.0	148.4	94.0
	15	18.2	193.5	234.8	107.3
	20	21.7	258.0	279.9	98.0
	Mean				102.3
2	—	2.8	—	36.1	
	5	7.7	64.5	99.3	98.0
	10	12.4	129.0	160.0	96.0
	15	16.7	193.5	215.4	92.7
	20	22.7	258.0	292.8	99.5
	Mean				96.5
3	—	4.1	—	52.9	
	5	8.7	64.5	112.2	92.0
	10	13.9	129.0	179.3	98.0
	15	18.5	193.5	238.7	96.0
	20	24.9	258.0	321.2	104.0
	Mean				97.5
4	—	5.9	—	76.1	
	5	11.1	64.5	143.2	104.0
	10	16.6	129.0	214.1	107.0
	15	21.9	193.5	282.5	106.7
	20	28.4	258.0	366.4	112.5
	Mean				107.5
5	—	6.5	—	83.9	
	5	11.7	64.5	150.9	104.0
	10	16.9	129.0	218.0	104.0
	15	22.4	193.5	289.0	106.0
	20	28.3	258.0	365.1	109.0
	Mean				105.8
6	—	0.0	—	0.0	
	5	5.3	64.5	68.4	106.0
	10	10.4	129.0	134.2	104.0
	15	16.0	193.5	206.4	106.7
	20	21.5	258.0	277.4	107.5
	Mean				106.0
Mean					**102.6**

Spiking recovery testing was previously determined for the ADVIA Centaur T4 Assay.

Precision

Precision was evaluated according to the NCCLS protocol EP5-A2.[12] According to this protocol, the assay was tested daily, for 5 to 20 days, using multiple reagent lots, on multiple systems across multiple sites. The system was calibrated immediately prior to the first test of day one. Assay results were calculated using the two-point calibration. The following results were obtained:

Mean (µg/dL)	Mean (nmol/L)	With-in run CV(%)	Between run CV(%)	Total CV(%)
4.91	63.3	2.7	5.6	6.3
9.17	118.2	2.4	4.7	5.3
15.57	200.9	1.9	4.1	4.5

Traceability of Standardization

The ADVIA Centaur CP T4 assay is traceable to an internal standard manufactured using U.S.P. (United States Pharmacopeia) material. Assigned values for calibrators and ranges of Ligand Plus controls are traceable to this standardization.

Technical Assistance

For customer support, please contact your local technical support provider or distributor.

References

1. Chen IW, Sperling MI. Thyroxine. In: Kaplan LA, Pesce AJ, editors. Clinical chemistry: theory, analysis, and correlation. 2nd ed. St. Louis: CV Mosby, 1989. p.956–9.
2. Fernandez-Ulloa M, Maxon HR. Thyroid. In: Kaplan LA, Pesce AJ, editors. Clinical chemistry: theory, analysis, and correlation. 2nd ed. St. Louis: CV Mosby, 1989. p.620–38.
3. Watts NB, Keffer JH. Practical endocrine diagnosis. 3rd ed. Philadelphia: Lea and Febiger, 1982. p.1–27, 77–96.
4. Chattoraj SC, Watts NB. Endocrinology. In: Tietz NW, editor. Fundamentals of clinical chemistry. 3rd ed. Philadelphia: WB Saunders, 1987. p.584–92.
5. National Committee for Clinical Laboratory Standards. Procedures for the handling and processing of blood specimens; approved guideline-third edition. NCCLS Document H18-A3; Wayne (PA): NCCLS; 2004.
6. Centers for Disease Control. 1988. Update: Universal precautions for prevention of transmission of human immunodeficiency virus, hepatitis B virus and other bloodborne pathogens in healthcare settings. MMWR, 37:377–82, 387–8.
7. National Committee for Clinical Laboratory Standards. Protection of laboratory workers from occupationally acquired infections; approved guideline-second edition. NCCLS Document M29-A2. Wayne (PA): NCCLS; 2004.
8. Federal Occupational Safety and Health Administration, Bloodborne Pathogens Standard, 29 CFR 1910.1030.
9. Boscato LM, Stuart MC. Heterophilic antibodies: a problem for all immunoassays. Clin Chem. 1988;34:27–33.
10. National Committee for Clinical Laboratory Standards. Interference testing in clinical chemistry; approved guideline. NCCLS Document EP7-A. Wayne (PA):NCCLS; 2002.
11. National Committee for Clinical Laboratory Standards. How to define and determine reference intervals in the clinical laboratory; approved guideline-second edition. NCCLS Document C28-A2. Wayne (PA): NCCLS; 2000.
12. National Committee for Clinical Laboratory Standards. Evaluation of precision performance of clinical chemistry devices; approved guideline-second edition. NCCLS Document EP5-A2. Wayne (PA):NCCLS; 2004.

ADVIA Centaur, ReadyPack, and ACS:180 are trademarks of Siemens Medical Solutions Diagnostics.

© 2007 Siemens Medical Solutions Diagnostics. All rights reserved.

US Pats 4,745,181; 4,918,192; 5,110,932; 5,609,822; 5,788,928

Origin: US

Siemens Medical Solutions Diagnostics
Tarrytown, NY 10591-5097 USA

EC REP Siemens Medical Solutions Diagnostics
Europe Limited
Chapel Lane, Swords, Co. Dublin, Ireland

Siemens Medical Solutions
Diagnostics Pty Ltd
ABN 65 007 436 651
885 Mountain Highway
Bayswater Victoria 3153
Australia

Siemens Medical Solutions Diagnostics
3-20-14 Higashi-Gotanda, Shinagawa
Tokyo, 141-8641, Japan

DEPARTMENT OF HEALTH AND HUMAN SERVICES

Public Health Service
Food and Drug Administration
2098 Gaither Road
Rockville, Maryland 20850

September 5, 2007

Carol Bianca
Siemens Medical Solutions Diagnostics
511 Benedict Ave.
Tarrytown, NY 10591-5097 US

Re: k971418/A009
Received: August 10, 2007

Categorization Notification

Regulations codified at 42 CFR 493.17 et. seq., implementing the Clinical Laboratory Improvement Amendments of 1988, require the Secretary to provide for the categorization of specific clinical laboratory test systems by the level of complexity. Based upon these regulations, the following commercially marketed test system or assay for the analyte is categorized below:

Test System/Analyte (s) : (SEE ATTACHMENT)

This complexity categorization is effective as of the date of this notification and will be reported on FDA's home page http://www.fda.gov/cdrh/clia. This categorization information may be provided to the user of the commercially marketed test system or assay as specified for the analyte indicated. It will also be announced in a Federal Register Notice, which will provide opportunity for comment on the decision. FDA reserves the right to reevaluate and recategorize this test based upon the comments received in response to the Federal Register Notice.

If you change the test system name or your company's name or if a distributor's name replaces your name, you must request another categorization by sending in the revised labeling along with a letter to FDA referencing the document number above.

If you have any questions regarding this complexity categorization, please contact Courtney Harper at 240-276-0694.

Sincerely yours,

Steven Gutman

Steven I. Gutman, M.D., M.B.A.
Director
Office of *In Vitro* Diagnostic Device
Evaluation and Safety
Center for Devices and Radiological Health

ATTACHMENT

Document Number : k971418/A009

Test System: Siemans ADVIA Centaur CP
Analyte : Ferritin
Complexity : MODERATE

Test System: Siemans ADVIA Centaur CP
Analyte : Thyroid Stimulating Hormone (TSH)
Complexity : MODERATE

Test System: Siemans ADVIA Centaur CP
Analyte : Thyroxine (T4)
Complexity : MODERATE

CLIA Routing Slip

Document No : k971418/A009

Division: DCTD
Branch: CTXB

Applicant: Siemens Medical Solutions Diagnostics
Trade Name: Chiron diagnostics automated chemiluminescence system (asc) centaur analyzer

DMC Date Received: August 10, 2007
Division Date Received: August 10, 2007

Categorization Information

CLIA Reviewer: James Callaghan [JVC]
Date Review Completed: August 28, 2007
Date Branch Concurred: 8-31-07 (EB)
Date Coordinator Concurred:
Effective Date:

Test Systems/Analytes/Grading

(See Attachment)

ATTACHMENT

Document Number : k971418/A009

Test System : Siemans ADVIA Centaur CP
Analyte : Ferritin
Complexity : MODERATE [11]
Knowledge [2]; Training and Experience [2]; Reagents Preparation [1];
Operational Steps [1]; Quality Control [1];
Troubleshooting and Maintenance [2]; Interpretation and Judgment [2]
Rationale : CHEM-001

Test System : Siemans ADVIA Centaur CP
Analyte : Thyroid Stimulating Hormone (TSH)
Complexity : MODERATE [11]
Knowledge [2]; Training and Experience [2]; Reagents Preparation [1];
Operational Steps [1]; Quality Control [1];
Troubleshooting and Maintenance [2]; Interpretation and Judgment [2]
Rationale : CHEM-001

Test System : Siemans ADVIA Centaur CP
Analyte : Thyroxine (T4)
Complexity : MODERATE [11]
Knowledge [2]; Training and Experience [2]; Reagents Preparation [1];
Operational Steps [1]; Quality Control [1];
Troubleshooting and Maintenance [2]; Interpretation and Judgment [2]
Rationale : CHEM-001

DEPARTMENT OF HEALTH & HUMAN SERVICES

Public Health Service
Food and Drug Administration

Memorandum

Date: 8/13/07

From: DMC (HFZ-401)

Subject: Premarket Notification Number(s): K971418 /A9

To: Division Director: CH/DCD

The attached information has been received by the 510(k) DMC on the above referenced 510(k) submission(s). Since a final decision has been rendered, this record is officially closed.

Please review the attached document and return it to the DMC, with one of the statements checked below.

_____Information does not change the status of the 510(k); no other action required by the DMC; please add to image file. (Prepare K-25) THIS DOES NOT APPLY TO TRANSFER OF OWNERSHIP. PLEASE BRING ANY TRANSFER OF OWNERSHIP TO POS.

_____Additional information requires a new 510(k); however, the information submitted is incomplete; (Noitify company to submit a new 510(k);[Prepare the K30 Letter on the LAN]

✓ No response necessary (e.g., hard copy of fax for the truthful and accuracy statement, 510(k) statement, change of address, phone number, or fax number).

CLIA CATEGORIZATION refers to laboratory test system devices reviewed by the Division of Clinical Laboratory Devices (HFZ-440

✓ Information requires a **CLIA CATEGORIZATION**; the complexity may remain the same as the original 510(k) or may change as a result of the additional information (Prepare a CAT letter)

____Additional information requires a **CLIA CATEGORIZATION**; however, the information submitted is incomplete; (call or fax firm)

_____No response necessary

This information should be returned to the DMC within 10 working days from the date of this memorandum.

Reviewed by: _____

Date: _____

DMC 915

SIEMENS

August 22, 2007

Mr. James Callaghan, OIVD
Document Mail Center
Center for Devices and Radiological Health
U.S. Food and Drug Administratiion
9200 Corporate Blvd. (HFZ-401)
Rockville, MD 20850

Dear Mr. Callaghan,

Re: FDA Phone Request of 22Aug07 for Official Correspondent of CLIA Categorization ADVIA Centaur CP requests

This letter is to inform the FDA that I am the official contact for the requests for CLIA categorization submitted to FDA by Seimens Medical Solutions Diagnostics starting from July 9, 2007.

The requests submitted are for previously cleared ADVIA Centaur Assays that have been applied to the ADVIA Centaur CP, a new member of the ADVIA Centaur analyzer family, in accordance with the Reagent Replacement and Instrument Family Policy.

I am sorry for the inconvenience this has created for the FDA.

Official Correspondent:
Carol A. Bianca
Senior Manager, Regulatory Affairs
Siemens Medical Solutions Diagnostics
511 Benedict Avenue
Tarrytown, NY 10591
Phone: 914 524-2531
Fax: 914 524-2500
Email: carol.bianca@siemens.com

Thank You and Best Regards

Carol A Bianca

Carol A. Bianca
Senior Manager, Regulatory Affairs
Siemens Medical Solutions Diagnostics

K971418/A9

August 7, 2007

Document Mail Center
Center for Devices and Radiological Health
U.S Food and Drug Administration
9200 Corporate Blvd. (HFZ-401)
Rockville, MD 20850

Re: 510(k) For CLIA categorization only.

IVD assays requiring 510(k) clearance currently on the ADVIA Centaur were migrated to the ADVIA Centaur CP instrument platform following the Replacement Reagent and Instrument Family Policy Guidance Document. Siemens Medical Solutions Diagnostics is requesting CLIA categorization for the ADVIA Centaur CP assay for Ferritin (FER) that migrated from the ADVIA Centaur. Attached are the two hard copies of the Package Inserts (IFU). The 510(k) clearance is K971418 .

Sincerely,

Carol Bianca
Siemens Medical Solutions Diagnostics
Senior Manager, Regulatory Affairs
Phone (914) 524-2531
FAX (914) 524-2500
email: carol.bianca@siemens.com

K38

DEPARTMENT OF HEALTH & HUMAN SERVICES

Public Health Service

Food and Drug Administration
2098 Gaither Road
Rockville MD 20850

CH

APR 3 1998

William J. Pignato
Director of Regulatory Affairs
Chiron Diagnostics
63 North Street
Medfield, Massachusetts 02052-1688

Re: K971418
Chiron Diagnostics ACS Systems and Immunoassays
Dated: March 12, 1998
Received: March 16, 1998

Dear Mr. Pignato:

We have reviewed the information dated March 12, 1998, regarding the 510(k) notification K971418 previously submitted for the device referenced above. Based solely on the information that you have provided, it does not appear that you have significantly changed or modified the design, components, method of manufacture, or intended use of the device referenced above (see 21 CFR 807.81(a)(3)). It is, however, your responsibility to determine if the change or modification to the device or its labeling could significantly affect the device's safety or effectiveness and thus require submission of a new 510(k). The information you have supplied regarding the application of the same ACS:180 reagents (FT4, FT3, T3, T4, TSH, TSH-3, T Uptake, Total hCG, LH, FSH, Progesterone and Estradiol-6) to the ACS:Centaur in according with the FDA Guidance: "Data for Commercialization of Original Equipment Manufacturer, Secondary and Generic Reagents for Automated Analyzers", will be added to the file.

Sincerely yours,

Alfred Montgomery, D.V.M.
Acting Branch Chief, Clinical Chemistry, Toxicology, and Hematology Branch
Division of Clinical Laboratory Devices
Office of Device Evaluation
Center for Devices and Radiological Health

DCLD 510(K) ROUTE SLIP

K971418/A2 ADD-TO

510(k) No.: ~~K140810M5~~	Reviewer: CCB	Keywords:
Applicant: Chiron Diag.	Assigned: 3/19	1. SRP
Date Rec'd: 3/16	Received: 3-19	2. OEM
		3. Analyzer-Centaur
Branch: CLCB		4.

Division Last Action:

Date:	Action:	Initials:	Logout Date:
3/19	LR	D	
3/25	K.25	CCB	
3/31/98	PT	KNG	
3/31/98	letterproof	CCB	
3-31-98	[illegible]	[illegible]	

DEPARTMENT OF HEALTH & HUMAN SERVICES

Public Health Service
Food And Drug Administration

Memorandum

Date: 3/17/98

From: Document Mail Center (HFZ-401)

Subject: Premarket Notification Number(s): K971418 / A2

To: Division Director: CH DCLD

The attached information has been received by the 510(k) Document Mail Center (DMC), on the above referenced 510(k) submission(s). Since a final decision has been rendered, this record is officially closed.

Please review the attached document and return it to the DMC, with one of the statements checked below. Feel free to note any additional comments below.

Thank you for your cooperation.

✓ Information does not change status of the 510(k); no other action required by the DMC; please add to the image file. [THE DIVISION SHOULD PREPARE A CONFIRMATION LETTER - AN EXAMPLE IS AVAILABLE ON THE LAN (K25). THIS DOES NOT APPLY TO TRANSFER OF OWNERSHIP. PLEASE BRING ANY TRANSFER OF OWNERSHIP TO POS.]

_____ Additional information requires a new 510(k) however the information submitted is incomplete. Notify the company to submit a new 510(k). [THE DIVISION SHOULD PREPARE THE (K30) LETTER ON THE LAN.]

_____ Additional information requires a new 510(k); please process. [THIS INFORMATION WILL BE MADE INTO A NEW 510(k)].

_____ No response necessary (e.g., hard copy of fax for the truthful and accuracy statement or 510(k) statement).

This information should be returned to the DMC within 10 working days from the date of this memorandum.

Reviewed by: Carol C. Benson - Received 3-19-98

Date: 3-25-98

13

~~K940810~~
K971418/A2

CHIRON | DIAGNOSTICS

Chiron Diagnostics Corporation
63 North Street
Medfield, Massachusetts 02052-1688
508.359.7711 Fax 508.359.3599

March 12, 1998

FDA/CDRH/OSE/DMC
98 MAR 13 09
19 MAR 98 13 02

U.S. Food and Drug Administration
Center for Devices and Radiological Heath
Document Mail Center (HFZ-401)
9200 Corporate Blvd.
Rockville, MD 20650

Re: Chrion Diagnostics ACS Systems and Immunoassays

Data for Commercialization of Original Equipment Manufacturer, Secondary and Generic Reagents for Automated Analyzers

Chiron Diagnostics is submitting the required information in accordance with the FDA Guidance: "Data for Commercialization of Original Equipment Manufacturer, Secondary and Generic Reagents for Automated Analyzers". Chiron plans to place in use the same assays currently cleared by FDA on its a ACS:180 analyzers for use on its ACS: Centaur analyzer. A chart of the comparison of features for the ACS: Centaur vs. ACS:180 is enclosed.

K971418

The first list of reagents currently approved for use on the ACS:180 and intended for use on the Centaur are following thyroid and reproductive immunoassays:

- ACS FT4 K961510
- ACS FT3 K940482
- ACS T3 K923646
- ACS T4 K905532
- ACS TSH K910981
- ACS TSH-3 K951796
- ACS T Uptake K970539
- ACS Total hCG K925277
- ACS LH K962041
- ACS FSH K904649
- ACS Progesterone K932955
- ACS Estradiol-6 K954697

ACS: 180 Systems DC# K902336/K940810 (K940810)

There are no changes in the formulation or design of the assays intended for use on both systems. Additionally, the placement of the these reagent on the ACS Centaur have been reviewed in accordance with "Deciding When to Submit a 5109k) for a

SK-30

1

Change to an Existing Device". The review determined that there were no changes requiring a new 510(k).

Testing of assays on the ACS Centaur was conducted in accordance with the enclosed Performance Study Protocol submitted on September 19, 1996 and subsequently accepted for the file by FDA. In conducting the reagent performance studies, some non-significant changes were made in the protocol having no impact on the quality of the review. These include:

(b)(4) Testing

[redacted]

We trust this information meets the requirements of Guidance.

If there are any questions, please contact me.

Sincerely

William J. Pignato
Director of Regulatory Affairs
(508) 359-3825
(508) 359-3885

Feature	ACS:180	ACS:Centaur
QC Software	• Stored control results • L-J plotting • Statistical enhancements • Compatibility with CCD QC Reporting	• same
Specimens	• Serum or plasma, sample cups or primary tubes may be used • Dilutions allowed on a per-assay basis • Capability of Dilution of Samples Requiring Pretreatment	• same
Reagents	• Reagent volume reporting • Reagent inventory tracks bottle usage	• same
Calibrators	• 6 to 10 point stored calibration for each reagent • 2 point user run calibration • Calibrators checked with barcode • Calibrator lot numbers stored and displayed	• same
Controls	• Low, mid, and high constituent controls • Capability to dilute controls	• same
Physical	• Bench Model; 23Hx23Dx58L • 250lbs • <1200watts • Ambient temp 18-30C	• Floor Model; 60Hx42Dx58L • 1200 lbs. • <2000 watts • Ambient temp 18-30C
Other User Interface Features	• Stat interrupt capability • Improved cleaning with Extended Operation Module • Improved User Interface for scheduling batch runs, report options, easy-to-use maintenance • Complete reporting of system status and logging of system events • Tracking on-board reagent usage • Support for foreign languages • Barcode extended to 128, 2 of 5 • On-Line Information System • System test extended to include slope and offset, dilution and overrange condition •	• same
Other Performance Features	• Throughput: 180 tests/hr • Time to First Result: 15 minutes • On-board supplies for 200 tests	• Throughput: 240 tests/hr • Time to First Result: 15 min, 30 min, or 60 min depending upon assay protocol • On-board supplies for 1000 tests

Instrum. . Comparison
ACS:Centaur and ACS:180

Feature	ACS:180	ACS:Centaur
Principle of Operation	• Chemiluminescence using magnetic-particle solid phase and chemiluminescent label	• same
Optical System	• PMT used in photon counting mode	• same
Temperature Control	• Reactions are controlled at 37°C	*Reactions* • Reactions controlled at 37°C *Reagent Storage* • On-board refrigeration

Dispense System	*Sample & Reagent Probes*
	• Automated pipetting of samples and reagents
	• Precision syringes (sample and reagent)
	• Fluid sensing on sample and reagent probes
	• Clog detection mechanism to alert operator to clogged sample probe
		• *Sample Probe* - same, plus
		  • disposable probe tips
		• *Reagent Probes* - same, plus
		  • fluid monitoring during aspiration

Sample and Reagent Handling	*Sample Handling* • Sample carousel with 34 outer positions and 26 inner positions • Sample tray inserts for other size sample tubes *Reagent Handling* • Reagent carousel with 26 positions (13 pairs in usual configuration)	*Sample Handling* • Sample tubes, 5 tubes per rack up to 180 samples *Reagent Handling* • Assay Reagents: Reagent compartment with 30 positions • Ancillary Reagents: Reagent compartment with 15 positions
Test Processing	• Random Access and Batch	• same

Assay Protocols	• approximately 8 minutes	• same, plus
		  • 18 minute incubation, single step
		  • 8-18 minute incubation, two step
		  • 18-18 minute incubation, two step

Human Interface / Data Output	• 9" CRT
	• External printers
	• Serial bi-directional LIS Interface
	• Audible (adjustable) beeper
	• Computer LIS Interface
		• same, plus
		  • 17" Color Monitor with Graphical User Interface
		  • External Modem for Remote Diagnostics Interface

Human Interface / Data Input	• 101 key keyboard • Hand-held barcode reader • Stationary barcode scanners for id of patient samples and reagents • Computer LIS Interface	• same
Human Interface / Data Analysis	• Automated data reduction • Assay-specific data reduction	• same

CIBA·CORNING

Ciba Corning Diagnostics Corp.
53 North Street
Medfield, MA 02052-1688
Telephone 508-359-7711

September 19, 1996

FDA/CDRH/ODE/DHC
1996 SEP 23 PM 3:13

U.S. Food and Drug Administration
Center for Devices and Radiological Health
Office of Device and Evaluation
Document Mail Center (HFZ-401)
9200 Corporate Blvd.
Rockville, MD 20850

Re: Performance Study Protocol for ACS:180® and 180 Plus
Document Controls # K902336 and K940810

In accordance with the Division of Clinical Laboratory Devices Guidance "Data Required for Commercialization of Primary, Secondary, and Generic Reagents for Automated Analyzers", we are submitting for the ACS:180® and ACS:180 Plus file a copy of the "Performance Study Protocol" as outline in the subject Guidance.

The previously cleared ACS systems are automated analyzers that are manufactured by Ciba Corning Diagnostics Corp. (A Chiron Company), the original equipment manufacturer (0EM). The currently approved reagents which are manufactured by or for Ciba Corning are considered Primary reagents that are dedicated for use solely on the ACS systems.

For any subsequent models of the same system, reagent performance studies will be conducted and documented for the reagents intended for the new models. The protocol which follows the requirements set forth in Table I of the Guidance is presented in the attachment.

Any new analytes not previously approved will require submission of an original 510(k). Any approved assay that is modified will be review to determined if the change(s) significantly affects the safety and effectiveness of the device. Changes will be reviewed and referenced to the FDA Guidance "Deciding when to submit a 510(k) for a Change in to an Existing Device", Draft #2 August 1, 1995.

If you have any question, please feel free to contact me.

Sincerely

William J. Pignato
Director of Regulatory Affairs
(508) 359-3825
(508) 359-3885 FAX
william.pignato@cibadiag.com

8

(b)(4) Performance Study Protocol

(b)(4) Performance Study Protocol

(b)(4) Performance Study Protocol

(b)(4) Performance Study Protocol

(b)(4) Performance Study Protocol

(b)(4) Performance Study Protocol

(b)(4) Performance Study Protocol

(b)(4) Performance Study Protocol

(b)(4) Performance Study Protocol

(b)(4) Performance Study Protocol

(b)(4) Performance Study Protocol

(b)(4) Performance Study Protocol

(b)(4) Performance Study Protocol

(b)(4) Performance Study Protocol

DEPARTMENT OF HEALTH AND HUMAN SERVICES Public Health Service

U.S. Food and Drug Administration
Center for Devices and Radiological Health
Document Mail Center - WO66-G609
10903 New Hampshire Ave.
Silver Spring, MD 20993-0002

August 2, 2011

Siemens Medical Solutions Diagnostics
c/o Sandra D. White, Regulatory Technical Specialist
333 Coney Street
East Walpole, MA 02032-1516 US

Document No: k971418/A012
Re: k003291 , k003412 , k010050 , k012183 , k012357 , k012777 , k013272 , k013406 , k013959 , k020217 , k020828 , k024017 , k031038 , k031393 , k053020 , k904649 , k904714 , k905532 , k910198 , k910981 , k911121 , k913646 , k925277 , k931213 , k932955 , k934562 , k951059 , k951796 , k953020 , k953021 , k955873 , k962559 , k964765 , k970386 , k970539 , k970546 , k971418 , k974029 , k974325 , k981478 , k982680 , k991692 , k992157 , k993571
Received: April 26, 2011

Categorization Notification

Regulations codified at 42 CFR 493.17 et. seq., implementing the Clinical Laboratory Improvement Amendments of 1988, require the Secretary to provide for the categorization of specific clinical laboratory test systems by the level of complexity. Based upon these regulations, the following commercially marketed test system or assay for the analyte is categorized below:

Test System/Analyte (s) : (SEE ATTACHMENT)

This complexity categorization is effective as of the date of this notification and will be reported on FDA's home page http://www.fda.gov/cdrh/clia. This categorization information may be provided to the user of the commercially marketed test system or assay as specified for the analyte indicated. It will also be announced in a Federal Register Notice, which will provide opportunity for comment on the decision. FDA reserves the right to reevaluate and recategorize this test based upon the comments received in response to the Federal Register Notice.

If you change the test system name or your company's name or if a distributor's name replaces your name, you must request another categorization by sending in the revised labeling along with a letter to FDA referencing the document number above.

If you have any questions regarding this complexity categorization, please contact Zhihao Peter Qiu at 301-796-6655.

Sincerely yours,

Alberto Gutierrez, Ph.D.
Director
Office of *In Vitro* Diagnostic Device
Evaluation and Safety
Center for Devices and Radiological Health

Document Number : k003291

Test System: SIEMENS ADVIA Centaur
Analyte : Anti-Thyroid Peroxidase (TPO) Antibodies
Complexity : MODERATE

Document Number : k003412

Test System: SIEMENS ADVIA Centaur
Analyte : Rubella Antibodies
Complexity : MODERATE

Document Number : k010050

Test System: SIEMENS ADVIA Centaur
Analyte : Folate (Folic Acid)
Complexity : MODERATE

Document Number : k012183

Test System: SIEMENS ADVIA Centaur
Analyte : Toxoplasma Gondii Antibodies
Complexity : MODERATE

Document Number : k012357

Test System: SIEMENS ADVIA Centaur
Analyte : Cancer Antigen 15-3 (CA 15-3)
Complexity : MODERATE

Document Number : k012777

Test System: SIEMENS ADVIA Centaur
Analyte : Anti-Thyroglobulin Antibodies
Complexity : MODERATE

Document Number : k013272

Test System: SIEMENS ADVIA Centaur
Analyte : Theophylline
Complexity : MODERATE

Document Number : k013406

Test System: SIEMENS ADVIA Centaur
Analyte : Homocysteine
Complexity : MODERATE

Document Number : k013959

Test System: SIEMENS ADVIA Centaur
Analyte : Valproic Acid
Complexity : MODERATE

Document Number : k020217

Test System: SIEMENS ADVIA Centaur
Analyte : Parathyroid Hormone - Mid-molecule (PTH-M)
Complexity : MODERATE

Document Number : k020828

Test System: SIEMENS ADVIA Centaur
Analyte : Cancer Antigen 125 (CA 125)
Complexity : MODERATE

Document Number : k024017

Test System: SIEMENS ADVIA Centaur
Analyte : HER-2/NEU GENE
Complexity : MODERATE

Document Number : k031038

Test System: SIEMENS ADVIA Centaur
Analyte : B-Type Natriuretic Peptide (BNP)
Complexity : MODERATE

Document Number : k031393

Test System: SIEMENS ADVIA Centaur
Analyte : CA 19-9
Complexity : MODERATE

Document Number : k053020

Test System: SIEMENS ADVIA Centaur
Analyte : Troponin-I (Cardiac)
Complexity : MODERATE

Document Number : k904649

Test System: SIEMENS ADVIA Centaur
Analyte : Follicle Stimulating Hormone (FSH)
Complexity : MODERATE

Document Number : k904714

Test System: SIEMENS ADVIA Centaur
Analyte : Prolactin
Complexity : MODERATE

Document Number : k905532

Test System: SIEMENS ADVIA Centaur
Analyte : Thyroxine (T4)
Complexity : MODERATE

Document Number : k910198

Test System: SIEMENS ADVIA Centaur
Analyte : Luteinizing Hormone (LH)
Complexity : MODERATE

Document Number : k910981

Test System: SIEMENS ADVIA Centaur
Analyte : Thyroid Stimulating Hormone (TSH)
Complexity : MODERATE

Document Number : k911121

Test System: SIEMENS ADVIA Centaur
Analyte : Creatine Kinase MB Fraction (CKMB)
Complexity : MODERATE

Document Number : k913646

Test System: SIEMENS ADVIA Centaur
Analyte : Triiodothyronine (T3)
Complexity : MODERATE

Document Number : k925277

Test System: SIEMENS ADVIA Centaur
Analyte : hCG, Total, Serum, Quantitative
Complexity : MODERATE

Document Number : k931213

Test System: SIEMENS ADVIA Centaur
Analyte : Digoxin
Complexity : MODERATE

Document Number : k932955

Test System: SIEMENS ADVIA Centaur
Analyte : Progesterone
Complexity : MODERATE

Document Number : k934562

Test System: SIEMENS ADVIA Centaur
Analyte : Testosterone
Complexity : MODERATE

Document Number : k951059

Test System: SIEMENS ADVIA Centaur
Analyte : Vancomycin
Complexity : MODERATE

Document Number : k951796

Test System: SIEMENS ADVIA Centaur
Analyte : Thyroid Stimulating Hormone (TSH) Third Generation
Complexity : MODERATE

Document Number : k953020

Test System: SIEMENS ADVIA Centaur
Analyte : Gentamicin
Complexity : MODERATE

Document Number : k953021

Test System: SIEMENS ADVIA Centaur
Analyte : Phenobarbital
Complexity : MODERATE

Document Number : k955873

Test System: SIEMENS ADVIA Centaur
Analyte : Phenytoin
Complexity : MODERATE

Document Number : k962559

Test System: SIEMENS ADVIA Centaur
Analyte : Cortisol
Complexity : MODERATE

Document Number : k964765

Test System: SIEMENS ADVIA Centaur
Analyte : Carbamazepine
Complexity : MODERATE

Document Number : k970386

Test System: SIEMENS ADVIA Centaur
Analyte : Estradiol
Complexity : MODERATE

Document Number : k970539

Test System: SIEMENS ADVIA Centaur
Analyte : T Uptake (TU)
Complexity : MODERATE

Document Number : k970546

Test System: SIEMENS ADVIA Centaur
Analyte : Digitoxin
Complexity : MODERATE

Document Number : k971418

Test System: SIEMENS ADVIA Centaur
Analyte : Cortisol, Urine (Direct Procedure)
Complexity : MODERATE

Test System: SIEMENS ADVIA Centaur
Analyte : Cortisol, Urine (Extraction Procedure)
Complexity : HIGH

Test System: SIEMENS ADVIA Centaur
Analyte : Folate, Red Blood Cell (RBC Folate)
Complexity : HIGH

Document Number : k974029

Test System: SIEMENS ADVIA Centaur
Analyte : Tobramycin
Complexity : MODERATE

Document Number : k974325

Test System: SIEMENS ADVIA Centaur
Analyte : Myoglobin
Complexity : MODERATE

Document Number : k981478

Test System: SIEMENS ADVIA Centaur
Analyte : Carcinoembryonic Antigen (CEA)
Complexity : MODERATE

Document Number : k982680

Test System: SIEMENS ADVIA Centaur
Analyte : CANCER ANTIGEN 27.29 (CA 27.29)
Complexity : MODERATE

Document Number : k991692

Test System: SIEMENS ADVIA Centaur
Analyte : Triiodothyronine, Free (FT3)
Complexity : MODERATE

Document Number : k992157

Test System: SIEMENS ADVIA Centaur
Analyte : Ferritin
Complexity : MODERATE

Document Number : k993571

Test System: SIEMENS ADVIA Centaur
Analyte : Vitamin B12
Complexity : MODERATE

CLIA Routing Slip

Document No : k971418/A012

Re : k003291 , k003412 , k010050 , k012183 , k012357 , k012777 , k013272 , k013406 , k013959 , k020217 , k020828 , k024017 , k031038 , k031393 , k053020 , k904649 , k904714 , k905532 , k910198 , k910981 , k911121 , k913646 , k925277 , k931213 , k932955 , k934562 , k951059 , k951796 , k953020 , k953021 , k955873 , k962559 , k964765 , k970386 , k970539 , k970546 , k971418 , k974029 , k974325 , k981478 , k982680 , k991692 , k992157 , k993571

Division: DCTD
Branch: CTXB

Applicant: Siemens Medical Solutions Diagnostics
Contact Name: Sandra D. White, Regulatory Technical Specialist
Contact Address: 333 Coney Street, East Walpole, MA 02032-1516 US
Contact Phone(s): (508) 660-4553
Contact Fax(es): (508) 660-4591
Contact Email: Sandra.White@siemens.com
Trade Name: Chiron diagnostics automated chemiluminescence system (asc) centaur analyzer

DMC Date Received: April 26, 2011
Division Date Received: April 27, 2011

Categorization Information

CLIA Reviewer: James Callaghan [JVC]
Date Review Completed: August 1, 2011

Date Branch Concurred: August 1, 2011 8/1/11
Date Coordinator Concurred: gmcB
Effective Date: 8-2-11

Test Systems/Analytes/Grading

(See Attachment)

Document Number : k003291

Test System: SIEMENS ADVIA Centaur
Analyte : Anti-Thyroid Peroxidase (TPO) Antibodies
Complexity : MODERATE [11]
Knowledge [2]; Training and Experience [2]; Reagents Preparation [1];
Operational Steps [1]; Quality Control [1];
Troubleshooting and Maintenance [2]; Interpretation and Judgment [2]
Rationale : CHEM-001

Document Number : k003412

Test System: SIEMENS ADVIA Centaur
Analyte : Rubella Antibodies
Complexity : MODERATE [11]
Knowledge [2]; Training and Experience [2]; Reagents Preparation [1];
Operational Steps [1]; Quality Control [1];
Troubleshooting and Maintenance [2]; Interpretation and Judgment [2]
Rationale : CHEM-001

Document Number : k010050

Test System: SIEMENS ADVIA Centaur
Analyte : Folate (Folic Acid)
Complexity : MODERATE [11]
Knowledge [2]; Training and Experience [2]; Reagents Preparation [1];
Operational Steps [1]; Quality Control [1];
Troubleshooting and Maintenance [2]; Interpretation and Judgment [2]
Rationale : CHEM-001

Document Number : k012183

Test System: SIEMENS ADVIA Centaur
Analyte : Toxoplasma Gondii Antibodies
Complexity : MODERATE [11]
Knowledge [2]; Training and Experience [2]; Reagents Preparation [1];
Operational Steps [1]; Quality Control [1];
Troubleshooting and Maintenance [2]; Interpretation and Judgment [2]
Rationale : CHEM-001

Document Number : k012357

Test System: SIEMENS ADVIA Centaur
Analyte : Cancer Antigen 15-3 (CA 15-3)
Complexity : MODERATE [11]
Knowledge [2]; Training and Experience [2]; Reagents Preparation [1];
Operational Steps [1]; Quality Control [1];
Troubleshooting and Maintenance [2]; Interpretation and Judgment [2]
Rationale : CHEM-001

Document Number : k012777

Test System: SIEMENS ADVIA Centaur
Analyte : Anti-Thyroglobulin Antibodies
Complexity : MODERATE [11]
Knowledge [2]; Training and Experience [2]; Reagents Preparation [1];
Operational Steps [1]; Quality Control [1];
Troubleshooting and Maintenance [2]; Interpretation and Judgment [2]
Rationale : CHEM-001

Document Number : k013272

Test System: SIEMENS ADVIA Centaur
Analyte : Theophylline
Complexity : MODERATE [11]
Knowledge [2]; Training and Experience [2]; Reagents Preparation [1];
Operational Steps [1]; Quality Control [1];
Troubleshooting and Maintenance [2]; Interpretation and Judgment [2]
Rationale : CHEM-001

Document Number : k013406

Test System: SIEMENS ADVIA Centaur
Analyte : Homocysteine
Complexity : MODERATE [11]
Knowledge [2]; Training and Experience [2]; Reagents Preparation [1];
Operational Steps [1]; Quality Control [1];
Troubleshooting and Maintenance [2]; Interpretation and Judgment [2]
Rationale : CHEM-001

Document Number : k013959

Test System: SIEMENS ADVIA Centaur
Analyte : Valproic Acid
Complexity : MODERATE [11]
Knowledge [2]; Training and Experience [2]; Reagents Preparation [1];
Operational Steps [1]; Quality Control [1];
Troubleshooting and Maintenance [2]; Interpretation and Judgment [2]
Rationale : CHEM-001

Document Number : k020217

Test System: SIEMENS ADVIA Centaur
Analyte : Parathyroid Hormone - Mid-molecule (PTH-M)
Complexity : MODERATE [11]
Knowledge [2]; Training and Experience [2]; Reagents Preparation [1];
Operational Steps [1]; Quality Control [1];
Troubleshooting and Maintenance [2]; Interpretation and Judgment [2]
Rationale : CHEM-001

Document Number : k020828

Test System: SIEMENS ADVIA Centaur
Analyte : Cancer Antigen 125 (CA 125)
Complexity : MODERATE [11]
Knowledge [2]; Training and Experience [2]; Reagents Preparation [1];
Operational Steps [1]; Quality Control [1];
Troubleshooting and Maintenance [2]; Interpretation and Judgment [2]
Rationale : CHEM-001

Document Number : k024017

Test System: SIEMENS ADVIA Centaur
Analyte : HER-2/NEU GENE
Complexity : MODERATE [11]
Knowledge [2]; Training and Experience [2]; Reagents Preparation [1];
Operational Steps [1]; Quality Control [1];
Troubleshooting and Maintenance [2]; Interpretation and Judgment [2]
Rationale : CHEM-001

Document Number : k031038

Test System: SIEMENS ADVIA Centaur
Analyte : B-Type Natriuretic Peptide (BNP)
Complexity : MODERATE [11]
Knowledge [2]; Training and Experience [2]; Reagents Preparation [1];
Operational Steps [1]; Quality Control [1];
Troubleshooting and Maintenance [2]; Interpretation and Judgment [2]
Rationale : CHEM-001

Document Number : k031393

Test System: SIEMENS ADVIA Centaur
Analyte : CA 19-9
Complexity : MODERATE [11]
Knowledge [2]; Training and Experience [2]; Reagents Preparation [1];
Operational Steps [1]; Quality Control [1];
Troubleshooting and Maintenance [2]; Interpretation and Judgment [2]
Rationale : CHEM-001

Document Number : k053020

Test System: SIEMENS ADVIA Centaur
Analyte : Troponin-I (Cardiac)
Complexity : MODERATE [11]
Knowledge [2]; Training and Experience [2]; Reagents Preparation [1];
Operational Steps [1]; Quality Control [1];
Troubleshooting and Maintenance [2]; Interpretation and Judgment [2]
Rationale : CHEM-001

Document Number : k904649

Test System: SIEMENS ADVIA Centaur
Analyte : Follicle Stimulating Hormone (FSH)
Complexity : MODERATE [11]
Knowledge [2]; Training and Experience [2]; Reagents Preparation [1];
Operational Steps [1]; Quality Control [1];
Troubleshooting and Maintenance [2]; Interpretation and Judgment [2]
Rationale : CHEM-001

Document Number : k904714

Test System: SIEMENS ADVIA Centaur
Analyte : Prolactin
Complexity : MODERATE [11]
Knowledge [2]; Training and Experience [2]; Reagents Preparation [1];
Operational Steps [1]; Quality Control [1];
Troubleshooting and Maintenance [2]; Interpretation and Judgment [2]
Rationale : CHEM-001

Document Number : k905532

Test System: SIEMENS ADVIA Centaur
Analyte : Thyroxine (T4)
Complexity : MODERATE [11]
Knowledge [2]; Training and Experience [2]; Reagents Preparation [1];
Operational Steps [1]; Quality Control [1];
Troubleshooting and Maintenance [2]; Interpretation and Judgment [2]
Rationale : CHEM-001

Document Number : k910198

Test System: SIEMENS ADVIA Centaur
Analyte : Luteinizing Hormone (LH)
Complexity : MODERATE [11]
Knowledge [2]; Training and Experience [2]; Reagents Preparation [1];
Operational Steps [1]; Quality Control [1];
Troubleshooting and Maintenance [2]; Interpretation and Judgment [2]
Rationale : CHEM-001

Document Number : k910981

Test System: SIEMENS ADVIA Centaur
Analyte : Thyroid Stimulating Hormone (TSH)
Complexity : MODERATE [11]
Knowledge [2]; Training and Experience [2]; Reagents Preparation [1];
Operational Steps [1]; Quality Control [1];
Troubleshooting and Maintenance [2]; Interpretation and Judgment [2]
Rationale : CHEM-001

Document Number : k911121

Test System: SIEMENS ADVIA Centaur
Analyte : Creatine Kinase MB Fraction (CKMB)
Complexity : MODERATE [11]
Knowledge [2]; Training and Experience [2]; Reagents Preparation [1];
Operational Steps [1]; Quality Control [1];
Troubleshooting and Maintenance [2]; Interpretation and Judgment [2]
Rationale : CHEM-001

Document Number : k913646

Test System: SIEMENS ADVIA Centaur
Analyte : Triiodothyronine (T3)
Complexity : MODERATE [11]
Knowledge [2]; Training and Experience [2]; Reagents Preparation [1];
Operational Steps [1]; Quality Control [1];
Troubleshooting and Maintenance [2]; Interpretation and Judgment [2]
Rationale : CHEM-001

Document Number : k925277

Test System: SIEMENS ADVIA Centaur
Analyte : hCG, Total, Serum, Quantitative
Complexity : MODERATE [11]
Knowledge [2]; Training and Experience [2]; Reagents Preparation [1];
Operational Steps [1]; Quality Control [1];
Troubleshooting and Maintenance [2]; Interpretation and Judgment [2]
Rationale : CHEM-001

Document Number : k931213

Test System: SIEMENS ADVIA Centaur
Analyte : Digoxin
Complexity : MODERATE [11]
Knowledge [2]; Training and Experience [2]; Reagents Preparation [1];
Operational Steps [1]; Quality Control [1];
Troubleshooting and Maintenance [2]; Interpretation and Judgment [2]
Rationale : CHEM-001

Document Number : k932955

Test System: SIEMENS ADVIA Centaur
Analyte : Progesterone
Complexity : MODERATE [11]
Knowledge [2]; Training and Experience [2]; Reagents Preparation [1];
Operational Steps [1]; Quality Control [1];
Troubleshooting and Maintenance [2]; Interpretation and Judgment [2]
Rationale : CHEM-001

Document Number : k934562

Test System: SIEMENS ADVIA Centaur
Analyte : Testosterone
Complexity : MODERATE [11]
Knowledge [2]; Training and Experience [2]; Reagents Preparation [1];
Operational Steps [1]; Quality Control [1];
Troubleshooting and Maintenance [2]; Interpretation and Judgment [2]
Rationale : CHEM-001

Document Number : k951059

Test System: SIEMENS ADVIA Centaur
Analyte : Vancomycin
Complexity : MODERATE [11]
Knowledge [2]; Training and Experience [2]; Reagents Preparation [1];
Operational Steps [1]; Quality Control [1];
Troubleshooting and Maintenance [2]; Interpretation and Judgment [2]
Rationale : CHEM-001

Document Number : k951796

Test System: SIEMENS ADVIA Centaur
Analyte : Thyroid Stimulating Hormone (TSH) Third Generation
Complexity : MODERATE [11]
Knowledge [2]; Training and Experience [2]; Reagents Preparation [1];
Operational Steps [1]; Quality Control [1];
Troubleshooting and Maintenance [2]; Interpretation and Judgment [2]
Rationale : CHEM-001

Document Number : k953020

Test System : SIEMENS ADVIA Centaur
Analyte : Gentamicin
Complexity : MODERATE [11]
Knowledge [2]; Training and Experience [2]; Reagents Preparation [1];
Operational Steps [1]; Quality Control [1];
Troubleshooting and Maintenance [2]; Interpretation and Judgment [2]
Rationale : CHEM-001

Document Number : k953021

Test System : SIEMENS ADVIA Centaur
Analyte : Phenobarbital
Complexity : MODERATE [11]
Knowledge [2]; Training and Experience [2]; Reagents Preparation [1];
Operational Steps [1]; Quality Control [1];
Troubleshooting and Maintenance [2]; Interpretation and Judgment [2]
Rationale : CHEM-001

Document Number : k955873

Test System : SIEMENS ADVIA Centaur
Analyte : Phenytoin
Complexity : MODERATE [11]
Knowledge [2]; Training and Experience [2]; Reagents Preparation [1];
Operational Steps [1]; Quality Control [1];
Troubleshooting and Maintenance [2]; Interpretation and Judgment [2]
Rationale : CHEM-001

Document Number : k962559

Test System : SIEMENS ADVIA Centaur
Analyte : Cortisol
Complexity : MODERATE [11]
Knowledge [2]; Training and Experience [2]; Reagents Preparation [1];
Operational Steps [1]; Quality Control [1];
Troubleshooting and Maintenance [2]; Interpretation and Judgment [2]
Rationale : CHEM-001

Document Number : k964765

Test System: SIEMENS ADVIA Centaur
Analyte : Carbamazepine
Complexity : MODERATE [11]
Knowledge [2]; Training and Experience [2]; Reagents Preparation [1];
Operational Steps [1]; Quality Control [1];
Troubleshooting and Maintenance [2]; Interpretation and Judgment [2]
Rationale : CHEM-001

Document Number : k970386

Test System: SIEMENS ADVIA Centaur
Analyte : Estradiol
Complexity : MODERATE [11]
Knowledge [2]; Training and Experience [2]; Reagents Preparation [1];
Operational Steps [1]; Quality Control [1];
Troubleshooting and Maintenance [2]; Interpretation and Judgment [2]
Rationale : CHEM-001

Document Number : k970539

Test System: SIEMENS ADVIA Centaur
Analyte : T Uptake (TU)
Complexity : MODERATE [11]
Knowledge [2]; Training and Experience [2]; Reagents Preparation [1];
Operational Steps [1]; Quality Control [1];
Troubleshooting and Maintenance [2]; Interpretation and Judgment [2]
Rationale : CHEM-001

Document Number : k970546

Test System: SIEMENS ADVIA Centaur
Analyte : Digitoxin
Complexity : MODERATE [11]
Knowledge [2]; Training and Experience [2]; Reagents Preparation [1];
Operational Steps [1]; Quality Control [1];
Troubleshooting and Maintenance [2]; Interpretation and Judgment [2]
Rationale : CHEM-001

Document Number : k971418

Test System: SIEMENS ADVIA Centaur
Analyte : Cortisol, Urine (Direct Procedure)
Complexity : MODERATE [11]
Knowledge [2]; Training and Experience [2]; Reagents Preparation [1];
Operational Steps [1]; Quality Control [1];
Troubleshooting and Maintenance [2]; Interpretation and Judgment [2]
Rationale : CHEM-001

Test System: SIEMENS ADVIA Centaur
Analyte : Cortisol, Urine (Extraction Procedure)
Complexity : HIGH [15]
Knowledge [2]; Training and Experience [3]; Reagents Preparation [2];
Operational Steps [2]; Quality Control [1];
Troubleshooting and Maintenance [2]; Interpretation and Judgment [3]
Rationale : CHEM-107

Test System: SIEMENS ADVIA Centaur
Analyte : Folate, Red Blood Cell (RBC-Folate)
Complexity : HIGH [14]
Knowledge [2]; Training and Experience [2]; Reagents Preparation [1];
Operational Steps [3]; Quality Control [1];
Troubleshooting and Maintenance [2]; Interpretation and Judgment [3]
Rationale : CHEM-138

FDA Tracking System

Document Number : k974029

Test System: SIEMENS ADVIA Centaur
Analyte : Tobramycin
Complexity : MODERATE [11]
Knowledge [2]; Training and Experience [2]; Reagents Preparation [1];
Operational Steps [1]; Quality Control [1];
Troubleshooting and Maintenance [2]; Interpretation and Judgment [2]
Rationale : CHEM-001

Document Number : k974325

Test System: SIEMENS ADVIA Centaur
Analyte : Myoglobin
Complexity : MODERATE [11]
Knowledge [2]; Training and Experience [2]; Reagents Preparation [1];
Operational Steps [1]; Quality Control [1];
Troubleshooting and Maintenance [2]; Interpretation and Judgment [2]
Rationale : CHEM-001

Document Number : k981478

Test System: SIEMENS ADVIA Centaur
Analyte : Carcinoembryonic Antigen (CEA)
Complexity : MODERATE [11]
Knowledge [2]; Training and Experience [2]; Reagents Preparation [1];
Operational Steps [1]; Quality Control [1];
Troubleshooting and Maintenance [2]; Interpretation and Judgment [2]
Rationale : CHEM-001

Document Number : k982680

Test System: SIEMENS ADVIA Centaur
Analyte : CANCER ANTIGEN 27.29 (CA 27.29)
Complexity : MODERATE [11]
Knowledge [2]; Training and Experience [2]; Reagents Preparation [1];
Operational Steps [1]; Quality Control [1];
Troubleshooting and Maintenance [2]; Interpretation and Judgment [2]
Rationale : CHEM-001

Document Number : k991692

Test System: SIEMENS ADVIA Centaur
Analyte : Triiodothyronine, Free (FT3)
Complexity : MODERATE [11]
Knowledge [2]; Training and Experience [2]; Reagents Preparation [1];
Operational Steps [1]; Quality Control [1];
Troubleshooting and Maintenance [2]; Interpretation and Judgment [2]
Rationale : CHEM-001

Document Number : k992157

Test System: SIEMENS ADVIA Centaur
Analyte : Ferritin
Complexity : MODERATE [11]
Knowledge [2]; Training and Experience [2]; Reagents Preparation [1];
Operational Steps [1]; Quality Control [1];
Troubleshooting and Maintenance [2]; Interpretation and Judgment [2]
Rationale : CHEM-001

Document Number : k993571

Test System: SIEMENS ADVIA Centaur
Analyte : Vitamin B12
Complexity : MODERATE [11]
Knowledge [2]; Training and Experience [2]; Reagents Preparation [1];
Operational Steps [1]; Quality Control [1];
Troubleshooting and Maintenance [2]; Interpretation and Judgment [2]
Rationale : CHEM-001

CDRH
Center Tracking System

DEPARTMENT OF HEALTH & HUMAN SERVICES

Public Health Services
Food and Drug Administration

Memorandum

Date:

From: DMC (HFZ-401)

Subject: Premarket Notification Number(s): K971418/A12

To: Division Director: CH/DCTC

The attached information has been received by the 510(k) DMC on the above referenced 510(k) submission(s). Since a final decision has been rendered, this record is officially closed.

Please review the attached document and return it to the DMC, with one of the statements checked below.

X Information does not change the status of the 510(k); no other action required by the DMC; please add to image file. (Prepare K-25) THIS DOES NOT APPLY TO TRANSFER OF OWNERSHIP. PLEASE BRING ANY TRANSFER OF OWNERSHIP TO POS.

_____ Additional information requires a new 510(k); however, the information submitted is incomplete; (Notify company to submit a new 510(k); [Prepare the K30 Letter on the LAN]

_____ No response necessary (e.g., hard copy of fax for the truthful and accuracy statement, 510(k) statement, change of address, phone number, or fax number).

CLIA CATEGORIZATION refers to laboratory test system devices reviewed by the Division of Clinical Laboratory Devices (HFZ-440

X Information requires a **CLIA CATEGORIZATION**; the complexity may remain the same as the original 510(k) or may change as a result of the additional information (Prepare a CAT letter)

_____ Additional information requires a **CLIA CATEGORIZATION**; however, the information submitted is incomplete; (call or fax firm)

_____ No response necessary

This information should be returned to the DMC within 10 working days from the date of this Memorandum.

Reviewed by: _____

Date: _____

K971418/A12

SIEMENS

April 15, 2011

U.S. Food and Drug Administration
Center for Devices and Radiological Health
Document Mail Center - WO66-G609
10903 New Hampshire Avenue
Silver Spring, MD 20993-0002

FDA CDRH DMC
APR 26 2011
Received

Re: CLIA CATEGORIZATION ADD TO FILE for k971418

Dear Sir/Madam:

Siemens Healthcare Diagnostics is seeking a **CLIA Categorization Add-to-File Request** for the attached list of 510(k) analytes that have been validated on the ADVIA Centaur analyzer. Siemens Healthcare Diagnostics would like to update these analytes in your CLIA database to accurately reflect the Siemens name change (from formerly Bayer and Chiron Diagnostics to Siemens).

As per email correspondence with Mr. Jim Callaghan, Center for Devices and Radiological Health (CDRH), please find attached:

- Alphabetical list of analytes
- One (1) hard copy of the Package Insert (IFU) for each analyte.

The 510(k) clearance number for the ADVIA Centaur instrument is **k971418**.

To the best of my knowledge, the data and information submitted in this premarket notification are truthful and accurate, and no material fact has been omitted (as required by 21 CFR 807.87).

Sincerely yours,

Sandra D. White

Sandra D. White, MS, RAC
Sr. Regulatory Technical Specialist

Siemens Healthcare Diagnostics Inc.
333 Coney Street,
East Walpole, MA 02032-1516
Phone: +1 508.660.4553
Fax: +1 508.660.4591
sandra.white@siemens.com

K32

24

White, Sandr. . USA)

From: Callaghan, Jim [James.Callaghan@fda.hhs.gov]
Sent: Monday, February 07, 2011 6:46 AM
To: White, Sandra (H USA)
Subject: RE: ADVIA Centaur Systems CLIA Categorization

I think you know this but I have been told to remind you PMAs should come separately and the PIs have the name of the instrument.

Jim

From: Callaghan, Jim
Sent: Tuesday, January 25, 2011 10:41 AM
To: 'White, Sandra (H USA)'
Subject: RE: ADVIA Centaur Systems CLIA Categorization

I haven't had a chance to speak to Management yet, due to availability, but it think they will want an add-to file. Please send in an add-to for k971418. Please make sure the cover letter clearly indicates it is an add-to for k971418 for the analytes that have been validated on the Centaur listed in your spreadsheet including 510(k) numbers has you have below. Include Siemens Package Inserts for all the assays and the title page of the Siemens Centaur analyzer as you want it listed in the database. Also incudes electron copies that we can copy from to speed things up.

Jim

From: Callaghan, Jim
Sent: Friday, January 21, 2011 12:16 PM
To: 'White, Sandra (H USA)'
Subject: RE: ADVIA Centaur Systems CLIA Categorization

OK, I forgot about Chiron. I will talk to management on the best way to handle this. I should be able to get back to you early next week.

Jim

25

From: White, Sandra (H USA) [mailto:sandra.white@siemens.com]
Sent: Friday, January 21, 2011 11:50 AM
To: Callaghan, Jim
Subject: RE: ADVIA Centaur Systems CLIA Categorization
Importance: High

Dear Mr. Callaghan,

Please find below the additional analytes that were CLIA Categorized and listed in

your Database under former Bayer/Chiron Diagnostics:

TEST SYSTEM: SIEMENS ADVIA CENTAUR

Document Number	Analyte Name	Test System Name	Date Effective	Complexity
P030029	ADVIA Centaur Anti-HBs	Bayer ADVIA Centaur	5/22/2006	Moderate
K982680	ADVIA Centaur BR (CA 27.29)	Chiron Diag ACS:Centaur	4/24/1998	Moderate
K981478	ADVIA Centaur CEA	Chiron Diag ACS:Centaur	4/24/1998	Moderate
K911121	ADVIA Centaur CKMB	Chiron Diag ACS:Centaur	4/24/1998	Moderate
K962559	ADVIA Centaur Cortisol	Chiron Diag ACS:Centaur	4/24/1998	Moderate
K971418	ADVIA Centaur Cortisol Urine (Direct Procedure)	Chiron Diag ACS:Centaur	4/24/1998	Moderate
K971418	ADVIA Centaur Cortisol Urine (Extraction Procedure)	Chiron Diag ACS:Centaur	4/24/1998	High
K931213	ADVIA Centaur Digoxin	Chiron Diag ACS:Centaur	4/24/1998	Moderate
K970386	ADVIA Centaur Estradiol-6	Bayer ADVIA Centaur	11/3/2003	Moderate
K992157	ADVIA Centaur Ferritin	Chiron Diag ACS:Centaur	4/24/1998	Moderate
K904649	ADVIA Centaur FSH	Chiron Diag ACS:Centaur	4/24/1998	Moderate
K991692	ADVIA Centaur FT3	Chiron Diag ACS:Centaur	4/24/1998	Moderate
P040018	ADVIA Centaur HAV IgM	Bayer ADVIA Centaur	5/22/2006	Moderate
P040017	ADVIA Centaur HAV Total	Bayer ADVIA Centaur	5/22/2006	Moderate
P030040	ADVIA Centaur HBc IgM	Bayer ADVIA Centaur	5/22/2006	Moderate
P040004	ADVIA Centaur HBc Total	Bayer ADVIA Centaur	5/22/2006	Moderate
P030049	ADVIA Centaur HBsAg and Confirmatory	Bayer ADVIA Centaur	5/22/2006	Moderate
P030056	ADVIA Centaur HCV	Bayer ADVIA Centaur	5/22/2006	Moderate
K910198	ADVIA Centaur LH	Chiron Diag ACS:Centaur	4/24/1998	Moderate
K932955	ADVIA Centaur Progesterone	Chiron Diag ACS:Centaur	4/24/1998	Moderate
K913646	ADVIA Centaur T3	Chiron Diag ACS:Centaur	4/24/1998	Moderate
K905532	ADVIA Centaur T4	Chiron Diag ACS:Centaur	4/24/1998	Moderate
K934562	ADVIA Centaur Testosterone	Chiron Diag ACS:Centaur	4/24/1998	Moderate
K925277	ADVIA Centaur Total hCG	Chiron Diag ACS:Centaur	4/24/1998	Moderate
K951796	ADVIA Centaur TSH-3	Chiron Diag ACS:Centaur	4/24/1998	Moderate
K970539	ADVIA Centaur T-Uptake	Chiron Diag ACS:Centaur	4/24/1998	Moderate
K993571	ADVIA Centaur VB12	Chiron Diag ACS:Centaur	4/24/1998	Moderate

TEST SYSTEM: SIEMENS ADVIA CENTAUR CP

Document Number	Analyte Name	Test System Name	Date Effective	Complexity
P930036	ADVIA Centaur AFP	Bayer ADVIA Centaur CP	10/13/2005	High
P990055	ADVIA Centaur cPSA	Bayer ADVIA Centaur CP	10/13/2005	Moderate
P950021	ADVIA Centaur PSA	Bayer ADVIA Centaur CP	11/9/2005	Moderate

Thanks again for your help!

Sincerely,
Sandra White

From: Callaghan, Jim [mailto:James.Callaghan@fda.hhs.gov]
Sent: Friday, January 21, 2011 9:33 AM
To: White, Sandra (H USA)
Subject: RE: ADVIA Centaur Systems CLIA Categorization

The below are all the analytes that are on the BAYER ADVIA:CENTAUR. Are there more? Let me know and I will discuss with Management to see the best way to proceed.

Jim

DOCUMENT_NUMBER	TEST_SYSTEM_NAME	ANALYTE_NAME	COMPLEXITY	DATE_EFFECTIVE
K020806	BAYER ADVIA:CENTAUR	Alpha-Fetoprotein - Tumor Marker	MODERATE	2002/04/12 00:00:00.000
K012777	BAYER ADVIA:CENTAUR	Anti-Thyroglobulin Antibodies	MODERATE	2001/10/18 00:00:00.000
K003291	BAYER ADVIA:CENTAUR	Anti-Thyroid Peroxidase (TPO) Antibodies	MODERATE	2000/12/06 00:00:00.000
K031038	BAYER ADVIA:CENTAUR	B-Type Natriuretic Peptide (BNP)	MODERATE	2003/06/23 00:00:00.000
K040425	BAYER ADVIA:CENTAUR	B-Type Natriuretic Peptide (BNP)	MODERATE	2004/06/22 00:00:00.000
K031393	BAYER ADVIA:CENTAUR	CA 19-9	MODERATE	2003/06/24 00:00:00.000
K020828	BAYER ADVIA:CENTAUR	Cancer Antigen 125 (CA 125)	MODERATE	2002/09/18 00:00:00.000
K012357	BAYER ADVIA:CENTAUR	Cancer Antigen 15-3 (CA 15-3)	MODERATE	2002/03/07 00:00:00.000
K964765	BAYER ADVIA:CENTAUR	Carbamazepine	MODERATE	2001/11/29 00:00:00.000
K970546	BAYER ADVIA:CENTAUR	Digitoxin	MODERATE	2001/11/29 00:00:00.000
X030005	BAYER ADVIA:CENTAUR	Estradiol	MODERATE	2003/11/03 00:00:00.000
K010050	BAYER ADVIA:CENTAUR	Folate (Folic Acid)	MODERATE	2001/02/27 00:00:00.000
K953020	BAYER ADVIA:CENTAUR	Gentamicin	MODERATE	2001/02/05 00:00:00.000
K024017	BAYER ADVIA:CENTAUR	HER-2/NEU GENE	MODERATE	2003/02/10 00:00:00.000
K013406	BAYER ADVIA:CENTAUR	Homocysteine	MODERATE	2001/12/18 00:00:00.000
K974325	BAYER ADVIA:CENTAUR	Myoglobin	MODERATE	2001/01/17 00:00:00.000
K020217	BAYER ADVIA:CENTAUR	Parathyroid Hormone - Intact	MODERATE	2002/03/18 00:00:00.000
K953021	BAYER ADVIA:CENTAUR	Phenobarbital	MODERATE	2001/02/12 00:00:00.000
K955873	BAYER ADVIA: CENTAUR	Phenytoin	MODERATE	2001/07/03 00:00:00.000
K904714	BAYER ADVIA:CENTAUR	Prolactin	MODERATE	2001/01/17 00:00:00.000
K994221	BAYER ADVIA:CENTAUR	Prostatic Specific Antigen (PSA)	MODERATE	2000/04/20 00:00:00.000
P950021	BAYER ADVIA:CENTAUR	Prostatic Specific Antigen (PSA)	MODERATE	2001/03/15 00:00:00.000
P990055	BAYER ADVIA:CENTAUR	Prostatic Specific Antigen, Complexed (Cpsa)	MODERATE	2002/12/12 00:00:00.000
K003412	BAYER ADVIA CENTAUR	Rubella Antibodies	MODERATE	2003/05/23 00:00:00.000
K010668	BAYER ADVIA CENTAUR	Rubella Antibodies	MODERATE	2002/12/18 00:00:00.000
K013272	BAYER ADVIA:CENTAUR	Theophylline	MODERATE	2001/11/06 00:00:00.000
K974029	BAYER ADVIA:CENTAUR	Tobramycin	MODERATE	2001/02/13 00:00:00.000
K010755	BAYER ADVIA:CENTAUR	Toxoplasma Gondii Antibodies	MODERATE	2001/08/31 00:00:00.000
K012183	BAYER ADVIA:CENTAUR	Toxoplasma Gondii Antibodies	MODERATE	2001/09/10 00:00:00.000
K053020	BAYER ADVIA CENTAUR	Troponin-I (Cardiac)	MODERATE	2005/12/30 00:00:00.000
K013959	BAYER ADVIA:CENTAUR	Valproic Acid	MODERATE	2002/02/07 00:00:00.000
K951059	BAYER ADVIA:CENTAUR	Vancomycin	MODERATE	2002/01/03 00:00:00.000
P930036	BAYER ADVIA:CENTAUR	Alpha-Fetoprotein - Amniotic Fluid	HIGH	2002/03/22 00:00:00.000

27

From: White, Sandra (H USA) [mailto:sandra.white@siemens.com]
Sent: Friday, January 21, 2011 7:55 AM
To: Callaghan, Jim
Cc: Velasco, Paula
Subject: RE: ADVIA Centaur Systems CLIA Categorization
Importance: High

Dear Mr. Callaghan,

Thank you for your quick response.

The analytes were CLIA categorized on two analyzers namely:
1). The ADVIA Centaur XP
2). The ADVIA Centaur CP

The same analytes should also be categorized on a third analyzer
3). The ADVIA Centaur

Categorizations in your CLIA database for the ADVIA Centaur analyzer for the same analytes are listed under former Bayer/Chiron Diagnostics (not Siemens). Therefore, Siemens is requesting CLIA Categorization for the Alphabetical list of analytes for the name change from Bayer/Chiron to Siemens on the ADVIA Centaur analyzer.

Thank you for your help!

Sincerely,
Sandra White

Sandra White, MS, RAC
Regulatory Affairs/Quality Systems
Siemens Healthcare Diagnostics Inc.
333 Coney Street
E. Walpole, MA 02032
Ph: 508-660-4553
Fx: 508-660-4591
Email: sandra.white@siemens.com
www.siemens.com/diagnostics

From: Callaghan, Jim [mailto:James.Callaghan@fda.hhs.gov]
Sent: Thursday, January 20, 2011 2:13 PM
To: White, Sandra (H USA)
Cc: Velasco, Paula
Subject: RE: ADVIA Centaur Systems CLIA Categorization

Sandra

I was mistaken, Paula is coordinating some other CLIA submission.

Attached is a list of all ADVIA Centaur CLIA categorization that have been fully process. I do not have the attachment you refer to for some reason. Please let me know what analytes are still pending.

Thanks

Jim

28

From: Callaghan, Jim
Sent: Thursday, January 20, 2011 11:46 AM
To: 'White, Sandra (H USA)'
Cc: Velasco, Paula
Subject: RE: ADVIA Centaur Systems CLIA Categorization

Sandra

I believe Paula has been coordinating these efforts. I have the Dimension product line in my que to process.

Jim

From: White, Sandra (H USA) [mailto:sandra.white@siemens.com]
Sent: Thursday, January 20, 2011 9:59 AM
To: Callaghan, Jim
Subject: RE: ADVIA Centaur Systems CLIA Categorization
Importance: High

Dear Mr. Callaghan,

As a follow-up to the e-mail below, I recently queried FDA's CLIA Database for Categorization status on the ADVIA Centaur Systems. There are still a number of analytes in your database that reference former Bayer (instead of Siemens) on the ADVIA Centaur analyzer. The Alphabetical list and other documentation that I forwarded to you [and that I sent to your Document Mail Center] for the ADVIA Centaur XP and ADVIA Centaur CP analyzers are applicable to the ADVIA Centaur analyzer.

Question: Can Siemens get CLIA Categorization for the Alphabetical list of analytes that I forwarded to you (in the e-mail below) for the name change from Bayer to Siemens on the ADVIA Centaur analyzer or will I need to send a separate request?

Your help is greatly appreciated.

Sincerely,
Sandra White

Sandra White, MS, RAC
Regulatory Affairs/Quality Systems
Siemens Healthcare Diagnostics Inc.
333 Coney Street
E. Walpole, MA 02032
Ph: 508-660-4553
Fx: 508-660-4591
Email: sandra.white@siemens.com
www.siemens.com/diagnostics

From: Callaghan, Jim [mailto:james.callaghan@fda.hhs.gov]
Sent: Thursday, August 21, 2008 8:35 AM
To: White, Sandra (MED US)
Subject: RE: ADVIA Centaur Systems CLIA Categorization

Thank you this should help a lot.

Jim

From: White, Sandra (MED US) [mailto:sandra.white@siemens.com]
Sent: Wednesday, August 20, 2008 3:44 PM
To: Callaghan, Jim
Subject: ADVIA Centaur Systems CLIA Categorization

Dear Mr. Callaghan,

Below is a summary of our discussion on August 19, 2008 at 3:45 p.m.

- FDA would like Siemens to provide an electronic copy of the Alphabetical List of Analytes for CLIA Categorization request on the ADVIA Centaur Systems [submitted in February].
- FDA would like Siemens to remove the PMA assays that are currently on the list as these should be filed in a separate request [or with the PMA Supplement]

Please find attached the Alphabetical list of analytes and the associated 510(k) numbers for the ADVIA Centaur Systems. It is my understanding that laboratory tests systems that do not produce a test result such as Calibrators are not categorized and that FDA would like Exempt Analytes filed in separate requests. Therefore, in addition to the PMA assays, I also removed C-peptide Calibrator (K021532), Insulin Calibrator (K021535) and Estradiol-6 [Exempt analyte] from the list.

Siemens will send a separate Categorization request for each Exempt analyte [Insulin, C-Peptide and Estradiol-6).

Please let me know if there is anything else you need.

Thank you,
Sandra White

Sandra White, MS
Regulatory Affairs
Siemens Healthcare Diagnostics
333 Coney Street
E. Walpole, MA 02032
Ph: 508-660-4553
Fx: 508-660-4591
Email: sandra.white@siemens.com

This message and any included attachments are from Siemens Medical Solutions

and are intended only for the addressee(s).
The information contained herein may include trade secrets or privileged or otherwise confidential information. Unauthorized review, forwarding, printing, copying, distributing, or using such information is strictly prohibited and may be unlawful. If you received this message in error, or have reason to believe you are not authorized to receive it, please promptly delete this message and notify the sender by e-mail with a copy to Central.SecurityOffice@siemens.com

Thank you

SIEMENS

Alphabetical List of Analytes Validated for use on ADVIA Centaur Analyzer

Test System Name: SIEMENS ADVIA Centaur

Document Number	Analyte Name	Test System Name	Date Effective	Complexity
K012777	ADVIA Centaur Anti-Tg ✓	Bayer ADVIA Centaur	10/18/2001	Moderate
K003291	ADVIA Centaur Anti-TPO ✓	Bayer ADVIA Centaur	12/6/2000	Moderate
K031038	ADVIA Centaur BNP ✓	Bayer ADVIA Centaur	6/22/2004	Moderate
K040425	ADVIA Centaur BNP	Bayer ADVIA Centaur	6/22/2004	Moderate
K982680	ADVIA Centaur BR ✓	Chiron Diag ACS:Centaur	4/24/1998	Moderate
K020828	ADVIA Centaur CA 125 II	Bayer ADVIA Centaur	9/18/2002	Moderate
K012357	ADVIA Centaur CA 15-3 ✓	Bayer ADVIA Centaur	3/7/2002	Moderate
K031393	ADVIA Centaur CA 19-9 ✓	Bayer ADVIA Centaur	6/24/2003	Moderate
K964765	ADVIA Centaur Carbamazepine ✓	Bayer ADVIA Centaur	11/29/2001	Moderate
K981478	ADVIA Centaur CEA ✓	Chiron Diag ACS:Centaur	4/24/1998	Moderate
K911121	ADVIA Centaur CKMB ✓	Chiron Diag ACS:Centaur	4/24/1998	Moderate
K962559	ADVIA Centaur Cortisol ✓	Chiron Diag ACS:Centaur	4/24/1998	Moderate
K971418	ADVIA Centaur Cortisol Urine (Direct Procedure) ✓	Chiron Diag ACS:Centaur	4/24/1998	Moderate
K971418	ADVIA Centaur Cortisol Urine (Extraction Procedure) ✓	Chiron Diag ACS:Centaur	4/24/1998	High
K970546	ADVIA Centaur Digitoxin ✓	Bayer ADVIA Centaur	11/29/2001	Moderate
K931213	ADVIA Centaur Digoxin ✓	Chiron Diag ACS:Centaur	4/24/1998	Moderate
K970386	ADVIA Centaur Estradiol-6 ✓	Bayer ADVIA Centaur	11/3/2003	Moderate
X030005	ADVIA Centaur Estradiol-6 III	Bayer ADVIA Centaur	11/3/2003	Moderate
K992157	ADVIA Centaur Ferritin ✓	Chiron Diag ACS:Centaur	4/24/1998	Moderate
K010050	ADVIA Centaur Folate ✓	Bayer ADVIA Centaur	2/27/2001	High
K904649	ADVIA Centaur FSH ✓	Chiron Diag ACS:Centaur	4/24/1998	Moderate
K991692	ADVIA Centaur FT3 ✓	Chiron Diag ACS:Centaur	4/24/1998	Moderate
K953020	ADVIA Centaur Gentamicin ✓	Bayer ADVIA Centaur	2/5/2001	Moderate
K013406	ADVIA Centaur HCY ✓	Bayer ADVIA Centaur	11/21/2002	Moderate
K024017	ADVIA Centaur Her-2/neu ✓	Bayer ADVIA Centaur	2/10/2003	Moderate
K020217	ADVIA Centaur iPTH ✓	Bayer ADVIA Centaur	6/6/2002	Moderate
K910198	ADVIA Centaur LH ✓	Chiron Diag ACS:Centaur	4/24/1998	Moderate
K974325	ADVIA Centaur Myoglobin (MYO) ✓	Bayer ADVIA Centaur	1/17/2001	Moderate
K953021	ADVIA Centaur Phenobarbital ✓	Bayer ADVIA Centaur	2/12/2001	Moderate

32

SIEMENS

Alphabetical List of Analytes Validated for use on ADVIA Centaur Analyzer

Test System Name: SIEMENS ADVIA Centaur

Document Number	Analyte Name	Test System Name	Date Effective	Complexity
K955873	ADVIA Centaur Phenytoin ✓	Bayer ADVIA Centaur	7/3/2001	Moderate
K932955	ADVIA Centaur Progesterone ✓	Chiron Diag ACS:Centaur	4/24/1998	Moderate
K904714	ADVIA Centaur Prolactin ✓	Bayer ADVIA Centaur	1/17/2001	Moderate
K003412	ADVIA Centaur Rubella G ✓	Bayer ADVIA Centaur	5/23/2003	Moderate
K010668	ADVIA Centaur Rubella M	Bayer ADVIA Centaur	12/18/2002	Moderate
K913646	ADVIA Centaur T3 ✓	Chiron Diag ACS:Centaur	4/24/1998	Moderate
K905532	ADVIA Centaur T4 ✓	Chiron Diag ACS:Centaur	4/24/1998	Moderate
K934562	ADVIA Centaur Testosterone ✓	Chiron Diag ACS:Centaur	4/24/1998	Moderate
K013272	ADVIA Centaur Theophylline 2 ✓	Bayer ADVIA Centaur	11/6/2001	Moderate
K053020	ADVIA Centaur TnI-Ultra™ ✓	Bayer ADVIA Centaur	12/30/2005	Moderate
K974029	ADVIA Centaur Tobramycin ✓	Bayer ADVIA Centaur	2/13/2001	Moderate
K925277	ADVIA Centaur Total hCG ✓	Chiron Diag ACS:Centaur	4/24/1998	Moderate
K012183	ADVIA Centaur Toxoplasma G ✓	Bayer ADVIA Centaur	9/10/2001	Moderate
K010755	ADVIA Centaur Toxoplasma M	Bayer ADVIA Centaur	9/4/2001	Moderate
K910981	ADVIA Centaur TSH ✓	Chiron Diag ACS:Centaur	4/24/1998	Moderate
K951796	ADVIA Centaur TSH-3 ✓	Chiron Diag ACS:Centaur	4/24/1998	Moderate
K951796	ADVIA Centaur TSH-3 Ultra 500T	Chiron Diag ACS:Centaur	4/24/1998	Moderate
K970539	ADVIA Centaur T-Uptake ✓	Chiron Diag ACS:Centaur	4/24/1998	Moderate
K013959	ADVIA Centaur Valproic Acid ✓	Bayer ADVIA Centaur	2/7/2002	Moderate
K951059	ADVIA Centaur Vancomycin ✓	Bayer ADVIA Centaur	1/3/2002	Moderate
K993571	ADVIA Centaur VB12 ✓	Chiron Diag ACS:Centaur	4/24/1998	Moderate

23

anti-Tg (aTG)

CE

Assay for the Detection of Autoantibodies against Thyroglobulin

Assay Summary

Sample Type	***Serum, EDTA Plasma***
Sample Volume	***40 µL***
Calibrator	***1***
Sensitivity and Assay Range	***10 – 500 U/mL***

Contents

REF	Contents	Number of Tests
01978428 (125748)	5 ReadyPack® primary reagent packs containing ADVIA Centaur® aTG Lite Reagent and Solid Phase ADVIA Centaur aTG Master Curve card	500
or		
05674636 (125747)	1 ReadyPack primary reagent packs containing ADVIA Centaur aTG Lite Reagent and Solid Phase ADVIA Centaur aTG Master Curve card	100

For a definition of symbols used in product labeling, please refer to *Understanding the Symbols* in Appendix D.

Intended Use

For *in vitro* diagnostic use in the quantitative determination of autoantibodies against thyroglobulin in serum or EDTA plasma using the ADVIA Centaur and ADVIA Centaur XP systems. This assay is intended to be used as an aid in the diagnosis of Hashimoto's and Graves' diseases which are autoimmune diseases affecting the thyroid gland.

Materials Required But Not Provided

REF	Description	Contents
09135152	Calibrator 1	2 vials of low calibrator CAL L
(127657)		2 vials of high calibrator CAL H

Optional Reagents

REF	Description	Contents
07656295 (128281)	ADVIA Centaur aTG Diluent DIL	6 ReadyPack ancillary reagent packs containing 5 mL/pack
09348261 (128280)	ADVIA Centaur aTG Diluent DIL	2 ReadyPack ancillary reagent packs containing 5 mL/pack
00994179 (127636)	aTG Diluent DIL	10 mL/vial
125501	aTG Master Curve Material	6 x 1 mL
04188444 (127664)	aTG 1, 2 quality control material	3 x 2 mL CONTROL 1 3 x 2 mL CONTROL 2

Summary and Explanation of the Test

Thyroglobulin (Tg) is a large, heterogeneous glycoprotein (MW 660,000) found in the follicular cells of the thyroid. Thyroglobulin plays an important role in the biosynthesis of thyroid hormones, T_3 and T_4. In the thyroid follicular cells, thyroid peroxidase catalyzes the iodination of tyrosyl groups within thyroglobulin. Iodinated thyroglobulin is stored in the colloid of the follicle and serves as a storage reservoir for T_3 and T_4. When the thyroid gland is stimulated, thyroglobulin is degraded and the thyroid hormones, T_3 and T_4, are released into the bloodstream.[1,2,3]

The measurement of autoantibodies against thyroglobulin is useful in identifying patients with autoimmune thyroid disease. Levels of anti-Tg antibodies are increased in 80 to 100% of patients with Hashimoto's or chronic thyroiditis, 60 to 70% of patients with Graves' disease, and in 10 to 20% of patients with subacute thyroiditis. Because of the heterogeneity of thyroglobulin, anti-thyroglobulin antibodies have been detected in other disease states, in elderly patients and also in clinically normal, euthyroid patients. Anti-Tg antibodies have been detected in patients with idiopathic Addision's disease and in some patients with Type I diabetes mellitus.[2,4,5]

Assay Principle

The ADVIA Centaur anti-Tg assay is a competitive immunoassay using direct, chemiluminescent technology. Autoantibody against thyroglobulin in the patient sample competes with polyclonal human anti-Tg antibody bound to polyclonal goat anti-human antibody covalently coupled to paramagnetic particles in the Solid Phase for a limited amount acridinium ester-labeled human thyroglobulin in the Lite Reagent.

The system automatically performs the following steps:

- dispenses 40 µL of sample into a cuvette
- dispenses 100 µL of Lite Reagent and incubates for 2.5 minutes at 37°C
- dispenses 200 µL of Solid Phase and incubates for 5.0 minutes at 37°C
- separates, aspirates, and washes the cuvettes with reagent water[6]
- dispenses 300 µL each of Acid Reagent and Base Reagent to initiate the chemiluminescent reaction
- reports results according to the selected option, as described in the system operating instructions or in the online help system

An inverse relationship exists between the amount of anti-Tg present in the patient sample and the amount of relative light units (RLUs) detected by the system.

Specimen Collection and Handling

Serum or EDTA plasma are the recommended sample types for this assay.

The following recommendations for handling and storing blood samples are furnished by the Clinical and Laboratory Standards Institute (CLSI, formerly NCCLS):[7]

- Collect all blood samples observing universal precautions for venipuncture.
- Allow samples to clot adequately before centrifugation.
- Centrifuge samples at ≥ 1000 x g for 15 to 20 minutes.
- Keep tubes stoppered and upright at all times.
- Do not use samples that have been stored at room temperature for longer than 8 hours.
- Separate serum or plasma from the red blood cells before storage at 2 to 8°C or -20°C.

35

- Tightly cap and refrigerate specimens at 2 to 8°C if the assay is not completed within 8 hours.
- Freeze samples at or below -20°C if the sample is not assayed within 48 hours.
- Freeze samples only once and mix thoroughly after thawing.

Before placing samples on the system ensure that:

- Samples are free of fibrin or other particulate matter. Remove particulates by centrifugation at ≥ 1000 x g for 15 to 20 minutes.
- Samples are free of bubbles.

Reagents

Store the reagents upright at 2–8°C.
Mix all primary reagent packs by hand before loading them onto the system. Visually inspect the bottom of the reagent pack to ensure that all particles are dispersed and resuspended. For detailed information about preparing the reagents for use, refer to Appendix C, *Handling Reagents*.

Reagent Pack	Reagent	Volume	Ingredients	Storage	Stability
ADVIA Centaur aTG ReadyPack primary reagent pack	Lite Reagent	10.0 mL/ reagent pack	human thyroglobulin (~0.38 µg/mL) labeled with acridinium ester in buffer with BSA, sodium azide (< 0.1%), protein stabilizers, and preservatives	2–8°C	until the expiration date on the pack label. For onboard stability, refer to *Onboard Stability and Calibration Interval.*
	Solid Phase	20.0 mL/ reagent pack	polyclonal human anti-Tg antibody (~1.98 µg/mL) bound to polyclonal goat anti-human antibody (~49.5 µg/mL) covalently coupled to paramagnetic particles in buffer with BSA, sodium azide (< 0.1%), and preservatives	2–8°C	until the expiration date on the pack label. For onboard stability, refer to *Onboard Stability and Calibration Interval.*
ADVIA Centaur aTG DIL ReadyPack ancillary reagent pack	anti-Tg Diluent	5.0 mL/ reagent pack	human plasma with sodium azide (< 0.1%) and preservatives	2–8°C	until the expiration date on the pack label or 14 consecutive days after accessing the ancillary reagent pack

NOTE: Sodium azide can react with copper and lead plumbing to form explosive metal azides. On disposal, flush reagents with a large volume of water to prevent the buildup of azides, if disposal into a drain is in compliance with federal, state, and local requirements.

CAUTION! POTENTIAL BIOHAZARD: Contains human source material. While each human serum or plasma donor unit used in the manufacture of this product was tested by FDA-approved methods and found nonreactive for hepatitis B surface antigen (HBsAg), antibody to hepatitis C (HCV), and antibody to HIV-1/2, all products manufactured using human source material should be handled as potentially infectious. Because no test method can offer complete assurance that hepatitis B or C viruses, HIV, or other infectious agents are absent, these products should be handled according to established good laboratory practices.[8-10]

CAUTION: This device contains material of animal origin and should be handled as a potential carrier and transmitter of disease.

For *In Vitro* Diagnostic Use.

Loading Reagents

Ensure that the system has sufficient primary and ancillary reagent packs. For detailed information about preparing the system, refer to the system operating instructions or to the online help system.

Mix all primary reagent packs by hand before loading them onto the system. Visually inspect the bottom of the reagent pack to ensure that all particles are dispersed and resuspended. For detailed information about preparing the reagents for use, refer to Appendix C, *Handling Reagents*.

Load the ReadyPack reagent packs in the primary reagent area using the arrows as a placement guide. The system automatically mixes the primary reagent packs to maintain homogeneous suspension of the reagents. For detailed information about loading reagents, refer to the system operating instructions or to the online help system.

If automatic dilution of a sample is required, load ADVIA Centaur anti-Tg Diluent in the ancillary reagent entry.

Onboard Stability and Calibration Interval

Onboard Stability	Calibration Interval
28 days	14 days

Additionally, the ADVIA Centaur anti-Tg assay requires a two-point calibration:

- when changing lot numbers of primary reagent packs
- when replacing system components
- when quality control results are repeatedly out of range

NOTE:

- Discard the primary reagent packs at the end of the onboard stability interval.
- Do not use reagents beyond the expiration date.

Master Curve Calibration

The ADVIA Centaur anti-Tg assay requires a Master Curve calibration when using a new lot number of Lite Reagent and Solid Phase. For each new lot number of Lite Reagent and Solid Phase, use the barcode reader or keyboard to enter the Master Curve values on the system. The Master Curve card contains the Master Curve values. For detailed information about entering calibration values, refer to the system operating instructions or to the online help system.

Quality Control

For detailed information about entering quality control values, refer to the system operating instructions or to the online help system.

To monitor system performance and chart trends, as a minimum requirement, two levels of quality control material should be assayed on each day that samples are analyzed. Quality control samples should also be assayed when performing a two-point calibration. Treat all quality control samples the same as patient samples.

For quality control of the ADVIA Centaur anti-Tg assay, use anti-Tg Control or an equivalent quality control material. Refer to the quality control product insert for the suggested Expected Values. If the quality control results do not fall within the Expected Values or within the laboratory's established values, do not report results. Take the following actions:

- Verify that the materials are not expired.

- Verify that required maintenance was performed.
- Verify that the assay was performed according to the instructions for use.
- Rerun the assay with fresh quality control samples.
- If necessary, contact your local technical support provider or distributor for assistance.

Sample Volume

This assay requires 40 µL of sample for a single determination. This volume does not include the unusable volume in the sample container or the additional volume required when performing duplicates or other tests on the same sample. For detailed information about determining the minimum required volume, refer to *Sample Volume Requirements* in the *ADVIA Centaur Reference Manual.*

Assay Procedure

For detailed procedural information, refer to the system operating instructions or to the online help system.

Procedural Notes

Calculations

For detailed information about how the system calculates results, refer to the system operating instructions or to the online help system.

The system reports anti-Tg results in U/mL.

- Dilutions
- Patient samples with anti-Tg levels greater than 500 U/mL must be diluted and retested to obtain accurate results.
- Due to the nature of antibody assays, samples may not dilute in a linear manner.
- Patient samples can be automatically diluted by the system or prepared manually.
- For automatic dilutions, ensure that ADVIA Centaur anti-Tg Diluent is loaded and set the system parameters as follows:

  Dilution point: ≤ 500 U/mL

  Dilution factor: 5

  For detailed information about automatic dilutions, refer to the system operating instructions or to the online help system.
- Manually dilute the patient samples when patient results exceed the linearity of the assay using automatic dilution, or when laboratory protocol requires manual dilution.
- Use anti-Tg Diluent to manually dilute patient samples, and then load the diluted sample in the sample rack, replacing the undiluted sample.
- Ensure that results are mathematically corrected for dilution. If a dilution factor is entered when scheduling the test, the system automatically calculates the result.

Disposal

Dispose of hazardous and biologically contaminated materials according to the practices of your institution. Discard all materials in a safe and acceptable manner and in compliance with all federal, state, and local requirements.

Limitations

Heterophilic antibodies in human serum can react with reagent immunoglobulins, interfering with *in vitro* immunoassays.[11] Patients routinely exposed to animals or to animal serum products can be prone to this interference and anomalous values may be observed. Additional information may be required for diagnosis.

Performance of this assay has not been established with neonatal specimens.

Serum specimens that are . . .	Demonstrate ≤ 5% change in results up to . . .
hemolyzed	100 mg/dL of hemoglobin
lipemic	1000 mg/dL of triglycerides
icteric	40 mg/dL of bilirubin
proteinemic	12 g/dL of protein

Expected Results

581 patients in the following categories were analyzed using the ACS:180® anti-Tg reagents. A value of 60 U/mL has been established as a cut-off to differentiate between anti-Tg positive and anti-Tg negative.

Sample Category	N	Median (U/mL)	Mean (U/mL)	% > 60 U/mL
Euthyroid	293	10	22	10
Hashimoto's Disease	189	95	104	70
Grave's Disease	99	21	69	39

These results were confirmed for the ADVIA Centaur anti-Tg assay. Refer to *Method Comparison.*

As with all *in vitro* diagnostic assays, each laboratory should determine its own reference range(s) for the diagnostic evaluation of patient results.[12]

Performance Characteristic

Specificity

The cross-reactivity of the ADVIA Centaur anti-Tg assay was determined by spiking serum samples with the following compounds at the indicated levels. These compounds did not have a significant effect on the anti-Tg measurement.

Compound	Amount Added	% Crossreactivity
Thyroglobulin	19,000 ng/mL	-0.41
T_3 antibodies	550 µg/mL	-1.16
T_4 antibodies	1010 µg/mL	-0.51

Interference testing was determined according to CLSI Document EP7-A2.[13]

Sensitivity and Assay Range

The ADVIA Centaur anti-Tg assay measures anti-Tg concentrations up to 500 U/mL with a minimum detectable concentration of 10 U/mL. Analytical sensitivity is defined as the concentration of anti-Tg that corresponds to the RLUs that are two standard deviations less than the mean RLUs of 20 replicate determinations of the anti-Tg zero standard.

Functional Sensitivity

The functional sensitivity of the ADVIA Centaur anti-Tg assay, defined as the concentration at which the total CV is ≤ 20%, is 30 U/mL. The mean functional sensitivity of this assay was determined over a period of 2 days using 1 reagent lot by testing multiple normal patient samples across 4 instruments. Values less than 30 U/mL should be reported as < 30 U/mL.

Method Comparison

For 255 serum samples in the range of 10 to 499 U/mL, the relationship between the ADVIA Centaur anti-Tg assay and the ACS:180 anti-Tg assay is described by the equation:

ADVIA Centaur anti-Tg = 1.03 (ACS:180 anti-Tg) + 2.29 U/mL

Correlation coefficient (r) = 0.98

The diagnostic concordance between the two assays is 98.0% (250/255). The following results were obtained:

Category	ACS:180 Positive	ACS:180 Negative
ADVIA Centaur Positive	110	4
ADVIA Centaur Negative	1	140

Dilution Recovery

Five human serum samples in the range of 260 to 507 U/mL of anti-Tg were serially diluted 1:2, 1:4, and 1:8 with anti-Tg Diluent and assayed for recovery and parallelism. The recoveries ranged from 82.7% to 110.0% with a mean of 95.1%.

Sample	Dilution	Observed (U/mL)	Expected (U/mL)	Recovery %
1	—	260		
	1:2	120	130	92.3
	1:4	64	65	98.5
	1:8	29	33	87.9
	Mean			92.9
2	—	349		
	1:2	165	175	94.3
	1:4	86	87	98.8
	1:8	41	44	93.2
	Mean			95.4
3	—	271		
	1:2	123	136	90.4
	1:4	69	68	101.5
	1:8	35	34	102.9
	Mean			98.3
4	—	319		
	1:2	148	160	92.5
	1:4	80	80	100.0
	1:8	44	40	110.0
	Mean			100.8
5	—	507		
	1:2	219	254	86.2
	1:4	105	127	82.7
	1:8	60	63	95.2
	Mean			88.0
Mean				**95.1**

Spiking Recovery

Varying amounts of anti-Tg were added to 5 serum sample with endogenous anti-Tg levels of 15 to 53 U/mL. The amount of anti-Tg that was added varied from 138 to 405 U/mL. When compared to the expected value, the measured (recovered) values of anti-Tg averaged 94.7% with a range of 87.3% to 102.3%.

Sample	Amount Added (U/mL)	Observed (U/mL)	Expected (U/mL)	Recovery %
1	—	28		
	138	145	166	87.3
	332	344	360	95.5
	405	407	433	94.0
	Mean			92.3
2	—	15		
	138	135	153	88.2
	332	334	347	96.3
	405	418	420	99.5
	Mean			94.7
3	—	53		
	138	172	191	90.1
	332	361	385	93.8
	405	442	458	96.5
	Mean			93.5
4	—	25		
	138	146	163	89.6
	332	348	357	97.5
	405	440	430	102.3
	Mean			96.5
5	—	47		
	138	170	185	91.9
	332	376	379	99.2
	405	447	452	98.9
	Mean			96.7
Mean				**94.7**

Precision

Three samples were assayed 6 times in 15 runs, on at least 6 systems (n = 90 for each sample). The following results were obtained:

Mean anti-Tg (U/mL)	Within-run % CV	Run-to-run % CV	Total % CV
71	5.8	2.1	6.2
170	3.7	1.2	3.9
344	3.4	5.7	6.6

Standardization

The ADVIA Centaur anti-Tg assay standardization is maintained with internal standard manufactured using human autoantibodies against thyroglobulin. The ADVIA Centaur anti-TG standardization is traceable to World Health Organization (WHO) Reference Preparation MRC 65/93. The theoretical WHO International units (IU/mL) average 2.8-fold higher compared to Siemens Healthcare Diagnostics standardization over the range tested (60–375 U/mL). Assigned calibrator doses and ranges for quality control material are traceable to this standardization.

41

Technical Assistance

For customer support, please contact your local technical support provider or distributor.

www.siemens.com/diagnostics

References

1. Feldt-Ramussen U. Analytical and clinical performance goals for testing autoantibodies to thyroperoxidase, thyroglobulin, and thyrotropin receptor. Clin Chem 1996;42:160-163.
2. Torréns J, Burch H. Serum thyroglobulin measurement: utility in clinical practice. The Endocrinologist 1996;6:125-144.
3. Lucas M, Fernández-Ulloa, M. Thyroid. In Kaplan LA, Pesce AJ. Clinical chemistry: theory, analysis, correlation. St. Louis, CV Mosby, 1996;868-872.
4. Rose NR, Burek CL. Autoantibodies to thyroglobulin in health and disease. Appl Biochem Biotechnology 2000;83:245-51.
5. Kasagi K, Kousaka T, et al. Clinical significance of measurements of antithyroid antibodies in the diagnosis of Hashimoto's thyroiditis: comparison with histological findings. Thyroid 1996;6:445-449.
6. Reagent Water Technical Bulletin. Siemens Healthcare Diagnostics, 107060.
7. Clinical and Laboratory Standards Institute (formerly NCCLS). *Procedures for the Handling and Processing of Blood Specimens; Approved Guideline - Third Edition.* Wayne, PA: Clinical and Laboratory Standards Institute; 2004. NCCLS Document H18-A3.
8. Centers for Disease Control. 1988. Update: Universal precautions for prevention of transmission of human immunodeficiency virus, hepatitis B virus and other bloodborne pathogens in healthcare settings. MMWR, 37:377–382, 387, 388.
9. Clinical and Laboratory Standards Institute (formerly NCCLS). *Protection of Laboratory Workers From Occupationally Acquired Infections; Approved Guideline - Third Edition.* Wayne, PA: Clinical and Laboratory Standards Institute; 2005. CLSI Document M29-A3.
10. Federal Occupational Safety and Health Administration, Bloodborne Pathogens Standard, 29 CFR 1910.1030.
11. Boscato LM, Stuart MC. Heterophilic antibodies: a problem for all immunoassays. Clin Chem 1988;34:27–33.
12. Clinical and Laboratory Standards Institute (formerly NCCLS). *How to Define and Determine Reference Intervals in the Clinical Laboratory; Approved Guideline - Second Edition.* Wayne, PA: Clinical and Laboratory Standards Institute; 2000. NCCLS Document C28-A2.
13. Clinical and Laboratory Standards Institute (formerly NCCLS). *Interference Testing in Clinical Chemistry; Approved Guideline - Second Edition.* Wayne, PA: Clinical and Laboratory Standards Institute; 2005. CLSI document EP7-A2.

ADVIA Centaur, ReadyPack, and ACS:180 are trademarks of Siemens Healthcare Diagnostics.

© 2008 Siemens Healthcare Diagnostics Inc. All rights reserved.

US Pats 4,918,192; 5,110,932; 5,609,822; 5,788,928

Origin: US

Siemens Healthcare Diagnostics Inc.
Tarrytown, NY 10591-5097 USA

EC REP Siemens Healthcare Diagnostics Ltd.
Sir William Siemens Sq.
Frimley, Camberley, UK GU16 8QD

Siemens Healthcare
Diagnostics Pty Ltd
885 Mountain Highway
Bayswater Victoria 3153
Australia

シーメンスヘルスケア・
ダイアグノスティクス株式会社
東京都品川区東五反田 3－20－14
Siemens Healthcare Diagnostics
輸入

anti-TPO (aTPO)

CE

Assay for the Detection of Autoantibodies against Thyroid Peroxidase

Assay Summary

Sample Type	***Serum, Heparinized Plasma, EDTA Plasma***
Sample Volume	***30 µL***
Calibrator	***O***
Sensitivity and Assay Range	***15 – 1300 U/mL***

Contents

REF	Contents	Number of Tests
05481536 (125746)	5 ReadyPack® primary reagent packs containing ADVIA Centaur® aTPO Lite Reagent and Solid Phase ADVIA Centaur aTPO Master Curve card	500
or		
05577649 (125745)	1 ReadyPack primary reagent packs containing ADVIA Centaur aTPO Lite Reagent and Solid Phase ADVIA Centaur aTPO Master Curve card	100

For a definition of symbols used in product labeling, please refer to *Understanding the Symbols* in Appendix D.

Intended Use

For *in vitro* diagnostic use in the quantitative determination of autoantibodies against thyroid peroxidase in serum or plasma using the ADVIA Centaur and ADVIA Centaur XP systems.

Materials Required But Not Provided

REF	Description	Contents
08916444 (125738)	Calibrator O	6 vials of low calibrator CAL L 6 vials of high calibrator CAL H
or		
09749681 (125737)	Calibrator O	2 vials of low calibrator CAL L 2 vials of high calibrator CAL H

Optional Reagents

REF	Description	Contents
06819158 (125734)	ADVIA Centaur aTPO Diluent DIL	6 ReadyPack ancillary reagent packs containing 5 mL/pack
or		
06975850 (125733)	ADVIA Centaur aTPO Diluent DIL	2 ReadyPack ancillary reagent packs containing 5 mL/pack
06527033 (125744)	aTPO Diluent DIL	10 mL/vial
125494	aTPO Master Curve Material	6 x 1 mL
05140658 (126076)	aTPO 1, 2 quality control material	3 x 2 mL CONTROL 1 3 x 2 mL CONTROL 2

Summary and Explanation of the Test

Thyroid peroxidase (TPO) is a membrane bound glycosylated heme-containing protein found in the apical membrane of the thyroid follicular cells. TPO, the major component of a large protein known as thyroid microsomal antigen, catalyzes the iodination of the tyrosyl groups in thyroglobulin resulting in the synthesis of thyroid hormones, T_3 and T_4.[1] Autoimmume thyroid disease is characterized by the presence of autoantibodies against TPO.

The measurement of autoantibodies against thyroid peroxidase is useful in identifying patients with autoimmune thyroid disease. Levels of anti-TPO antibodies are increased in greater than 90% of patients with active autoimmune thyroiditis. Anti-TPO antibodies activate complement and are thought to be significantly involved in thyroid dysfunction and the pathogenesis of hypothyroidism.[1] In patients with autoimmune thyroid disease, anti-TPO antibodies are present in nearly all patients with Hashimoto's thyroiditis and in greater than 70% of patients with Graves' disease. Anti-TPO antibodies are also present in patients with atropic thyroiditis and primary myxedema. Low levels of anti-TPO antibodies can be detected in healthy individuals with normal thyroid function. The clinical significance of this has not been determined.[2,3]

Levels of anti-TPO antibodies are increased in women with postpartum thyroiditis. This condition occurs in 5% to 9% of postpartum women. The diagnosis of postpartum thyroiditis is based on the observation of abnormal thyroid function in a postpartum female with a positive anti-TPO antibody level. Although postpartum thyroiditis is associated with anti-TPO antibodies, 50% of anti-TPO positive women do not develop thyroid dysfunction.[4] The measurement of anti-TPO antibodies can be useful in diagnosing maternal Graves' disease or Hashimoto's thyroiditis.[5]

Assay Principle

The ADVIA Centaur anti-TPO assay is a competitive immunoassay using chemiluminescent technology. Autoantibody against thyroid peroxidase in the patient sample competes with monoclonal mouse anti-TPO antibody covalently coupled to paramagnetic particles in the Solid Phase for a limited amount of human TPO complexed with acridinium ester-labeled monoclonal mouse anti-TPO antibody in the Lite Reagent.

The system automatically performs the following steps:

- dispenses 30 µL of sample into a cuvette
- dispenses 100 µL of Lite Reagent and incubates for 2.5 minutes at 37°C
- dispenses 200 µL of Solid Phase and incubates for 5.0 minutes at 37°C
- separates, aspirates, and washes the cuvettes with reagent water[6]
- dispenses 300 µL each of Acid Reagent and Base Reagent to initiate the chemiluminescent reaction
- reports results according to the selected option, as described in the system operating instructions or in the online help system

An inverse relationship exists between the amount of anti-TPO present in the patient sample and the amount of relative light units (RLUs) detected by the system.

Specimen Collection and Handling

Serum, heparinized plasma, or EDTA plasma are the recommended sample types for this assay.

The following recommendations for handling and storing blood samples are furnished by the Clinical and Laboratory Standards Institute (CLSI, formerly NCCLS):[7]

- Collect all blood samples observing universal precautions for venipuncture.
- Allow samples to clot adequately before centrifugation.
- Centrifuge samples at ≥ 1000 x g for 15 to 20 minutes.
- Keep tubes stoppered and upright at all times.
- Do not use samples that have been stored at room temperature for longer than 8 hours.
- Separate serum or plasma from the red blood cells before storage at 2° to 8°C or -20°C.
- Tightly cap and refrigerate specimens at 2° to 8°C if the assay is not completed within 8 hours..
- Freeze samples at or below -20°C if the sample is not assayed within 48 hours.
- Freeze samples only once and mix thoroughly after thawing.

Before placing samples on the system ensure that:

- Samples are free of fibrin or other particulate matter. Remove particulates by centrifugation at ≥ 1000 x g for 15 to 20 minutes.
- Samples are free of bubbles.

Reagents

Store the reagents upright at 2–8°C.
Mix all primary reagent packs by hand before loading them onto the system. Visually inspect the bottom of the reagent pack to ensure that all particles are dispersed and resuspended. For detailed information about preparing the reagents for use, refer to Appendix C, *Handling Reagents*.

Reagent Pack	Reagent	Volume	Ingredients	Storage	Stability
ADVIA Centaur aTPO ReadyPack primary reagent pack	Lite Reagent	10.0 mL/ reagent pack	human TPO (~200 ng/mL) complexed with acridinium ester-labeled monoclonal mouse anti-TPO antibody (~60 ng/mL) in phosphate buffer with BSA and preservatives	2–8°C	until the expiration date on the pack label. For onboard stability, refer to *Onboard Stability and Calibration Interval.*
	Solid Phase	20.0 mL/ reagent pack	monoclonal mouse anti-TPO antibody (~21 µg/mL) covalently coupled to paramagnetic particles in phosphate buffer with BSA and preservatives	2–8°C	until the expiration date on the pack label. For onboard stability, refer to *Onboard Stability and Calibration Interval.*
ADVIA Centaur aTPO [DIL] ReadyPack ancillary reagent pack	anti-TPO Diluent	5.0 mL/ reagent pack	human plasma with sodium azide (< 0.1%) and preservatives	2–8°C	until the expiration date on the pack label or 28 consecutive days after accessing the ancillary reagent pack

CAUTION! POTENTIAL BIOHAZARD: Contains human source material. While each human serum or plasma donor unit used in the manufacture of this product was tested by FDA-approved methods and found nonreactive for hepatitis B surface antigen (HBsAg), antibody to hepatitis C (HCV), and antibody to HIV-1/2, all products manufactured using human source material should be handled as potentially infectious. Because no test method can offer complete assurance that hepatitis B or C viruses, HIV, or other infectious agents are absent, these products should be handled according to established good laboratory practices.[8-10]

CAUTION: This device contains material of animal origin and should be handled as a potential carrier and transmitter of disease.

NOTE: Sodium azide can react with copper and lead plumbing to form explosive metal azides. On disposal, flush reagents with a large volume of water to prevent the buildup of azides, if disposal into a drain is in compliance with federal, state, and local requirements.

For *In Vitro* Diagnostic Use.

Loading Reagents

Ensure that the system has sufficient primary and ancillary reagent packs. For detailed information about preparing the system, refer to the system operating instructions or to the online help system.

Mix all primary reagent packs by hand before loading them onto the system. Visually inspect the bottom of the reagent pack to ensure that all particles are dispersed and resuspended. For detailed information about preparing the reagents for use, refer to Appendix C, *Handling Reagents*.

Load the ReadyPack reagent packs in the primary reagent area using the arrows as a placement guide. The system automatically mixes the primary reagent packs to maintain homogeneous suspension of the reagents. For detailed information about loading reagents, refer to the system operating instructions or to the online help system.

If automatic dilution of a sample is required, load ADVIA Centaur anti-TPO Diluent in the ancillary reagent entry.

Onboard Stability and Calibration Interval

Onboard Stability	Calibration Interval
28 days	14 days

Additionally, the ADVIA Centaur anti-TPO assay requires a two-point calibration:

- when changing lot numbers of primary reagent packs
- when replacing system components
- when quality control results are repeatedly out of range

NOTE:

- Discard the primary reagent packs at the end of the onboard stability interval.
- Do not use reagents beyond the expiration date.

Master Curve Calibration

The ADVIA Centaur anti-TPO assay requires a Master Curve calibration when using a new lot number of Lite Reagent and Solid Phase. For each new lot number of Lite Reagent and Solid Phase, use the barcode reader or keyboard to enter the Master Curve values on the system. The Master Curve card contains the Master Curve values. For detailed information about entering calibration values, refer to the system operating instructions or to the online help system.

Quality Control

For detailed information about entering quality control values, refer to the system operating instructions or to the online help system.

To monitor system performance and chart trends, as a minimum requirement, two levels of quality control material should be assayed on each day that samples are analyzed. Quality control samples should also be assayed when performing a two-point calibration. Treat all quality control samples the same as patient samples.

For quality control of the ADVIA Centaur anti-TPO assay, use anti-TPO controls or an equivalent quality control material. Refer to the quality control product insert for the suggested Expected Values. If the quality control results do not fall within the Expected Values or within the laboratory's established values, do not report results. Take the following actions:

- Verify that the materials are not expired.
- Verify that required maintenance was performed.
- Verify that the assay was performed according to the instructions for use.
- Rerun the assay with fresh quality control samples.
- If necessary, contact your local technical support provider or distributor for assistance.

Sample Volume

This assay requires 30 µL of sample for a single determination. This volume does not include the unusable volume in the sample container or the additional volume required when performing duplicates or other tests on the same sample. For detailed information about determining the minimum required volume, refer to *Sample Volume Requirements* in the *ADVIA Centaur Reference Manual.*

Assay Procedure

For detailed procedural information, refer to the system operating instructions or to the online help system.

Procedural Notes

Calculations

For detailed information about how the system calculates results, refer to the system operating instructions or to the online help system.

The system reports anti-TPO results in U/mL.

Dilutions

- Samples with anti-TPO levels greater than 1300 U/mL must be diluted and retested to obtain accurate results.
- Due to the nature of antibody assays, samples may not dilute in a linear manner.
- Patient samples can be automatically diluted by the system or prepared manually.

- For automatic dilutions, ensure that ADVIA Centaur anti-TPO Diluent is loaded and set the system parameters as follows:

  Dilution point: ≤ 1300 U/mL

  Dilution factor: 5, 10

  For detailed information about automatic dilutions, refer to the system operating instructions or to the online help system.
- Manually dilute the patient samples when patient results exceed the linearity of the assay using automatic dilution, or when laboratory protocol requires manual dilution.
- Use anti-TPO Diluent to manually dilute patient samples, and then load the diluted sample in the sample rack, replacing the undiluted sample.
- Ensure that results are mathematically corrected for dilution. If a dilution factor is entered when scheduling the test, the system automatically calculates the result.

Disposal

Dispose of hazardous and biologically contaminated materials according to the practices of your institution. Discard all materials in a safe and acceptable manner and in compliance with all federal, state, and local requirements.

Limitations

Heterophilic antibodies in human serum can react with reagent immunoglobulins, interfering with *in vitro* immunoassays.[11] Patients routinely exposed to animals or to animal serum products can be prone to this interference and anomalous values may be observed. Additional information may be required for diagnosis.

Performance of this assay has not been established with neonatal specimens.

Serum specimens that are . . .	Demonstrate ≤ 5% change in results up to . . .
hemolyzed	500 mg/dL of hemoglobin
lipemic	1000 mg/dL of lipid
icteric	40 mg/dL of bilirubin
proteinemic	12 g/dL of protein

Expected Results

531 patients in the following categories were analyzed using the ACS:180® anti-TPO reagents. A value of 60 U/mL has been established as a cut-off to differentiate between anti-TPO positive and anti-TPO negative.

Sample Category	N	Median (U/mL)	Mean (U/mL)	% > 60 U/mL
Euthyroid	254	< 15	78	11
Hashimoto's Disease	183	1136	1166	95
Graves' Disease	94	839	839	69

These results were confirmed for the ADVIA Centaur anti-TPO assay. Refer to *Method Comparison*.

As with all *in vitro* diagnostic assays, each laboratory should determine its own reference range(s) for the diagnostic evaluation of patient results.[12]

Performance Characteristic

Specificity

The cross-reactivity of the ADVIA Centaur anti-TPO assay was determined by spiking serum samples with the compounds listed below at the indicated levels. These compounds did not have a significant effect on the anti-TPO measurement.

Compound	Amount Added	% Cross-reactivity
Thyroglobulin	19,000 ng/mL	ND*
T4 antibodies	1.01 mg/mL	ND
T3 antibodies	0.55 mg/mL	ND
Human anti-TG antibodies	2000 U/mL	ND

* ND = Not Detectable.

Interference testing was determined according to CLSI Document EP7-A2.[13]

Analytical Sensitivity and Assay Range

The ADVIA Centaur anti-TPO assay measures anti-TPO concentrations up to 1300 U/mL with a minimum detectable concentration of 15 U/mL. Analytical sensitivity is defined as the concentration of anti-TPO that corresponds to the RLUs that are two standard deviations less than the mean RLUs of 20 replicate determinations of the anti-TPO zero standard.

Functional Sensitivity

The functional sensitivity of the ADVIA Centaur anti-TPO assay, defined as the concentration at which the total CV is ≤ 20%, is 25 U/mL. The mean functional sensitivity of this assay was determined over a period of 4 days using 3 reagent lots by testing multiple normal patient samples across 2 instruments. Values less than 25 U/mL should be reported as < 25 U/mL.

Method Comparison

For 114 serum samples in the range of < 15 to 1300 U/mL, the relationship between the ADVIA Centaur anti-TPO assay and the ACS:180 anti-TPO assay is described by the equation:

ADVIA Centaur anti-TPO = 0.97 (ACS:180 anti-TPO) - 1.0664 U/mL

Correlation coefficient (r) = 0.99

The diagnostic concordance between the two assays is 100% (114/114). The following results were obtained:

Category	ACS:180 Positive	ACS:180 Negative
ADVIA Centaur Positive	114	0
ADVIA Centaur Negative	0	114

Dilution Recovery

Five human serum samples in the range of 584 to 1088 U/mL of anti-TPO were serially diluted 1:2, 1:4, and 1:8 with anti-TPO Diluent and assayed for recovery and parallelism. The recoveries ranged from 83.7% to 136.2% with a mean of 103.5%.

Sample	Dilution	Observed (U/mL)	Expected (U/mL)	Recovery %
1	—	793		
	1:2	376	397	94.7
	1:4	186	198	93.9
	1:8	101	99	102.0
	Mean			96.9
2	—	1088		
	1:2	456	544	83.7
	1:4	259	272	95.1
	1:8	143	136	104.8
	Mean			94.5
3	—	584		
	1:2	292	292	100.0
	1:4	151	146	103.2
	1:8	81	73	110.5
	Mean			104.6
4	—	649		
	1:2	303	325	93.4
	1:4	171	162	105.6
	1:8	91	81	111.8
	Mean			103.6
5	—	1038		
	1:2	535	519	103.1
	1:4	296	260	113.8
	1:8	177	130	136.2
	Mean			117.7
Mean				**103.5**

Spiking Recovery

Varying amounts of anti-TPO were added to four serum sample with endogenous anti-TPO levels of < 15 to 227 U/mL. The amount of anti-TPO that was added varied from 289 to 578 U/mL. When compared to the expected value, the measured (recovered) values of anti-TPO averaged 101.5% with a range of 93.3% to 115.1%

Sample	Amount added (U/mL)	Observed (U/mL)	Expected (U/mL)	Recovery %
1	—	< 15		
	289	272	292	94.1
	578	539	581	93.3
	Mean			93.7
2	—	51		
	289	328	340	95.8
	578	616	629	97.8
	Mean			96.8
3	—	71		
	289	372	360	104.2
	578	701	649	109.0
	Mean			106.6
4	—	227		
	289	523	516	102.4
	578	892	805	115.1
	Mean			108.8
Mean				**101.5**

Precision

Two samples were assayed in replicates of 6 in 24 runs on at least 4 systems (n = 144 for each sample), using 7 reagent lots. The following results were obtained:

Mean anti-TPO (U/mL)	Within-run % CV	Run-to-run % CV	Total % CV
70.8	6.8	3.4	7.6
458.5	1.3	2.8	3.1

Standardization

The ADVIA Centaur anti-TPO assay standardization is maintained with internal standard manufactured using human autoantibodies against thyroid peroxidase. The ADVIA Centaur anti-TPO standardization is traceable to the World Health Organization (WHO) Reference Preparation MRC 66/387. The Siemens Healthcare Diagnostics standardization (U/mL) average 3-fold higher compared to theoretical WHO International units over the range of 50 to 800 U/mL. Assigned calibrator values and ranges for quality control material are traceable to this standardization.

Technical Assistance

For customer support, please contact your local technical support provider or distributor.

www.siemens.com/diagnostics

52

References

1. Kaczur V, Vereb Gy, Molnar I, et al. Effect of anti-thyroid peroxidase (TPO) antibodies on TPO activity measured by chemiluminescence assay. Clin Chem 1997;43:1392-1396.
2. Kraiem Z. The measurement of antithyroid auto antibodies in the diagnosis and management of thyroid autoimmune disease. Clinical Reviews in Allergy and Immunology 1998;16:219-225.
3. Feldt-Ramussen U. Analytical and clinical performance goals for testing autoantibodies to thyroperoxidase, thyroglobulin , and thyrotropin receptor. Clin Chem 1996;42:160-163.
4. Lazarus J.H. Clinical manifestations of postpartum thyroid disease. Thyroid 1999;July:9(7):685-9.
5. Fantz C, Dagogo-Jack S, et al. Thyroid function during pregnancy. Clin Chem 1999;45:2250-2258.
6. Reagent Water Technical Bulletin. Siemens Healthcare Diagnostics, 107060.
7. Clinical and Laboratory Standards Institute (formerly NCCLS). Procedures for the handling and processing of blood specimens; approved guideline - third edition. Wayne, PA: Clinical and Laboratory Standards Institute; 2004. NCCLS Document H18-A3.
8. Centers for Disease Control. 1988. Update:Universal precautions for prevention of transmission of human immunodeficiency virus, hepatitis B virus and other bloodborne pathogens in healthcare settings. MMWR, 37:377-382, 387, 388.
9. Clinical and Laboratory Standards Institute (formerly NCCLS). Protection of laboratory workers from occupationally acquired infections; approved guideline - third edition. Wayne, PA: Clinical and Laboratory Standards Institute; 2005. NCCLS Document M29-A3.
10. Federal Occupational Safety and Health Administration, Bloodborne Pathogens Standard, 29 CFR 1910.1030.
11. Boscato LM, Stuart MC. Heterophilic antibodies: a problem for all immunoassays. Clin Chem 1988; 34:27-33.
12. Clinical and Laboratory Standards Institute (formerly NCCLS). How to define and determine reference intervals in the clinical laboratory; approved guideline - second edition. Wayne, PA: Clinical and Laboratory Standards Institute; 2000. NCCLS Document C28-A2.
13. Clinical and Laboratory Standards Institute (formerly NCCLS). Interference testing in clinical chemistry; approved guideline - second edition. Wayne, PA: Clinical and Laboratory Standards Institute; 2005. NCCLS Document EP7-A2.

ADVIA Centaur, ReadyPack, and ACS:180 are trademarks of Siemens Healthcare Diagnostics.

© 2008 Siemens Healthcare Diagnostics Inc. All rights reserved.

US Pats 4,918,192; 5,110,932; 5,609,822; 5,788,928

Origin: US

Siemens Healthcare Diagnostics Inc.
Tarrytown, NY 10591-5097 USA

EC REP Siemens Healthcare Diagnostics Ltd.
Sir William Siemens Sq.
Frimley, Camberley, UK GU16 8QD

Siemens Healthcare
Diagnostics Pty Ltd
885 Mountain Highway
Bayswater Victoria 3153
Australia

シーメンスヘルスケア・
ダイアグノスティクス株式会社
東京都品川区東五反田 3－20－14
Siemens Healthcare Diagnostics
輸入

BNP

CE

Assay Summary

Sample Type	***EDTA Plasma***
Sample Volume	***100 µL***
Calibrator	***BNP***
Sensitivity and Assay Range	***< 2.0–5000 pg/mL (< 0.58–1445 pmol/L)***

Contents

REF	*Contents*	*Number of Tests*
02816634	5 ReadyPack® primary reagent packs containing ADVIA Centaur® BNP Lite Reagent and Solid Phase	500
	ADVIA Centaur BNP Master Curve card	
or		
02816138	1 ReadyPack primary reagent pack containing ADVIA Centaur BNP Lite Reagent and Solid Phase	
	ADVIA Centaur BNP Master Curve card	100

For a definition of symbols used in product labeling, refer to *Understanding the Symbols* in Appendix D.

Intended Use

For *in vitro* diagnostic use in the quantitative determination of B-type Natriuretic Peptide (BNP) in human plasma using the ADVIA Centaur and ADVIA Centaur XP systems. This assay is indicated for the measurement of plasma BNP as an aid in the diagnosis and assessment of the severity of heart failure. In patients with acute coronary syndromes (ACS), this test, in conjunction with other known risk factors, can also be used to predict survival as well as to predict the likelihood of future heart failure. This assay is not intended for use on any other system.

Materials Required but Not Provided

REF	*Description*	*Contents*
02817266	BNP Calibrator	2 vials of low calibrator CAL L
		2 vials of high calibrator CAL H
01137199 (112351)	ADVIA Centaur Wash 1 WASH 1	2 x 1500 mL/pack
or		
03773025	ADVIA Centaur Wash 1 WASH 1 *	2 x 2500 mL/pack

* For use with systems with 2500 mL capacity

Optional Reagents

REF	Description	Contents
07907174 (110313)	ADVIA Centaur Multi-Diluent 1 [M-DIL 1]	6 ReadyPack ancillary reagent packs containing 25 mL/pack
or		
07293184 (110312)	ADVIA Centaur Multi-Diluent 1 [M-DIL 1]	2 ReadyPack ancillary reagent packs containing 25 mL/pack
09348792 (672177)	Multi-Diluent 1 [M-DIL 1]	50 mL/vial
02817045	BNP 1,2,3 quality control material	3 x 2 mL Level 1 [CONTROL 1] 3 x 2 mL Level 2 [CONTROL 2] 3 x 2 mL Level 3 [CONTROL 3]
02815905	BNP Master Curve Material	5 x 1 mL

Summary and Explanation of the Test

Heart failure is an important clinical syndrome which compromises left ventricular systolic or diastolic function or a combination of both. Heart failure occurs when the heart is unable to pump blood at a rate sufficient for metabolic requirements. Its most common causes are coronary artery disease, hypertension, valvular heart diseases and cardiomyopathies. Accurate and early diagnosis is important since effective therapeutic interventions (e.g., angiotensin converting enzyme inhibitors, beta-blockers) are available, which improve both morbidity and mortality. Based on clinical signs and symptoms, the severity of heart failure is classified into four classes of increasing disease progression according to the New York Heart Association classification (NYHA class I–IV).[1,2]

The natriuretic peptide system is a family of structurally similar but genetically distinct peptides, which include atrial natriuretic peptide (ANP) and B-type natriuretic peptide (BNP) of myocardial cell origin and C-type natriuretic peptide (CNP) of endothelial cell origin. These peptides are characterized by a common 17 amino acid ring structure with a disulfide bond between two cysteine residues.[3-5] The cardiac natriuretic peptides are the naturally occurring antagonists of the renin-angiotensin-aldosterone system and of the sympathetic nervous system. They promote natriuresis and diuresis, act as vasodilators, and exert antimitogenic effects on cardiovascular tissues.[6] ANP and BNP are secreted by the heart in response to hemodynamic stress. Increased levels of BNP are produced mainly in response to left ventricular wall stretch and volume overload. ANP and BNP are expressed predominantly in the atria and ventricles, respectively, and are important in regulation of blood pressure, electrolyte and volume homeostasis.[6-10]

The cardiac natriuretic peptide system is activated to its highest degree in ventricular dysfunction and has an important role in maintaining the compensated state of asymptomatic heart failure and delaying disease progression. BNP is synthesized within the cardiomyocyte as a preprohormone (preproBNP) of 134 amino acids, from which a prehormone (proBNP) of 108 amino acids and a signal peptide of 26 amino acids is derived. The proBNP precursor protein is then cleaved into a physiologically active 32 amino acid C-terminal peptide (BNP 77–108; BNP) and a 76 amino acid N-terminal prohormone fragment (NT-proBNP 1–76). Studies indicate that the proBNP protein precursor is cleaved either within or on the surface of cardiomyocytes, and that both NT-proBNP (1–76) and physiologically active C-terminal BNP molecule (77–108) are released into the bloodstream.[11-13] The ADVIA Centaur BNP assay measures only the physiologically active BNP molecule (77–108) and utilizes monoclonal antibodies specific to its C-terminal portion and ring structure.

Several studies indicate that BNP can be used for a wide range of clinical applications; including diagnosis, monitoring and prognosis.[3,4,11,12,14-16] The circulating levels of BNP increase with decreasing left ventricular function and increasing clinical severity of heart failure, according to the NYHA classification, which makes it an appropriate test for diagnosis and staging of heart failure.[17-27] Other studies have demonstrated that an increased level of circulating BNP correlates with higher incidence of cardiac events and mortality in patients with heart failure[28-31] and Acute Coronary Syndromes,[32-33] and supports utilization of BNP as a marker for patient prognosis. The Thrombolysis in Myocardial Infarction 23 (ENTIRE-TIMI 23) Sub-Study evaluated the prognostic performance of the ADVIA Centaur BNP method assessed at the time of initial presentation in a well-characterized cohort of patients enrolled in the Enoxaparin and tenecteplase (TNK-tPA) with or without GPIIb/IIIa Inhibitor as Reperfusion Strategy in ST Elevation Myocardial Infarction (STEMI).[34] Plasma BNP was measured retrospectively in 438 STEMI patients who had an episode of ischemic discomfort of at least 30 minutes duration within the prior 6 hours. This study found that BNP levels greater than 80 pg/mL at presentation were associated with a substantially higher risk of death within the 30-day follow-up period. There are also indications that BNP can be used to provide an index to modulate treatment of patients with heart failure.[16,17,35,36]

It has been reported that patients with acute decompensated heart failure who are candidates for nesiritide (recombinant BNP) infusion should have a baseline BNP measurement taken prior to initiation of therapy. Measurements taken during infusion are reflective of the dose of nesiritide.[37] Because of the short half-life of BNP (20 minutes), measurements taken 2 hours after the cessation of treatment again reflect the level of endogenous BNP. It has also been reported that following infusion, endogenous BNP levels return to baseline by 1–2 hours and continue to drop at 6 hours to about 80% of preinfusion levels, suggesting a resetting of the neuro-hormonal axis and improvement in ventricular wall tension as a result of treatment.[38] The ADVIA Centaur BNP assay is not approved for nesiritide monitoring.

Assay Principle

The ADVIA Centaur BNP assay is a fully automated two-site sandwich immunoassay using direct chemiluminescent technology, which uses constant amounts of two monoclonal antibodies. The first antibody, in the Lite Reagent, is an acridinium ester labeled monoclonal mouse anti-human BNP $F(ab')_2$ fragment specific to the ring structure of BNP. The second antibody, in the Solid Phase, is a biotinylated monoclonal mouse anti-human antibody specific to the C-terminal portion of BNP, which is coupled to streptavidin magnetic particles.

The system automatically performs the following actions:

- Dispenses 100 µL of sample into a cuvette.
- Dispenses 100 µL of Lite Reagent and incubates for 5 minutes at 37°C.
- Dispenses 200 µL of Solid Phase and incubates for 2.5 minutes at 37°C.
- Separates, aspirates and washes the cuvettes with Wash 1 Reagent.
- Dispenses 300 µL each of Acid Reagent and Base Reagent to initiate the chemiluminescent reaction.
- Reports results according to the selected option, as described in the system operating instructions or in the online help system.

A direct relationship exists between the amount of BNP present in the patient sample and the amount of relative light units (RLUs) detected by the system.

Specimen Collection and Handling

EDTA plasma is the recommended sample type for this assay. Plastic blood collection tubes are recommended for sample collection, as BNP is unstable in glass containers. Use of glass tubes and transfer pipettes affects accurate quantitation of BNP.[39,40]

- Collect blood samples in EDTA collection tubes and mix gently.
- The average percentage of BNP recovery in uncentrifuged whole blood after 24 hour storage at 2° to 8°C or room temperature was 96%. For optimal recovery of BNP values, it is suggested that samples be tested within 24 hours.
- After centrifugation, store separated plasma samples at 2° to 8°C until testing.
- The average percentage of BNP recovery in EDTA plasma after 24 hours storage at 2° to 8°C was 91%. It is recommended not to store EDTA-plasma at room temperature. For optimal recovery of BNP values, it is suggested that plasma samples be tested within 24 hours. If plasma samples are not tested within 24 hours, store samples in plastic tubes and freeze at or below -20°C in non-frostfree freezers.
- Samples may undergo up to 4 freeze/thaw cycles without degradation. Samples are stable up to 9 months when stored frozen at or below -20°C.
- Mix samples thoroughly after thawing and store at 2° to 8°C until use. Samples should be tested within 8 hours after thawing.

The following recommendations for handling and storing blood samples are furnished by the Clinical and Laboratory Standards Institute (CLSI, formerly NCCLS):[41]

- Collect all blood samples observing universal precautions for venipuncture.
- Keep tubes stoppered and upright at all times.

Before placing samples on the system, ensure that samples have the following characteristics:

- Samples are free of fibrin or other particulate matter. Remove particulates by centrifugation at 1000 x g for 15 to 20 minutes.
- Samples are free of bubbles.

Reagents

UP

Store the reagents upright at 2–8°C.
Mix all primary reagent packs by hand before loading them onto the system. Visually inspect the bottom of the reagent pack to ensure that all particles are dispersed and resuspended. For detailed information about preparing the reagents for use, refer to Appendix C, *Handling Reagents*.

Reagent Pack	Reagent	Volume	Ingredients	Storage	Stability
ADVIA Centaur BNP ReadyPack primary reagent pack	Lite Reagent	10.5 mL/ reagent pack	monoclonal mouse anti-human BNP F(ab')2 fragment antibody (~ 0.50 µg/mL) labeled with acridinium ester in buffer with bovine gamma globulin, mouse gamma globulin and preservatives	2–8°C	until the expiration date on the pack label. For onboard stability, refer to *Onboard Stability and Calibration Interval.*
	Solid Phase	21 mL/ reagent pack	monoclonal mouse anti-human BNP antibody (~6.0 µg/mL) in bovine gamma globulin, mouse gamma globulin and preservatives	2–8°C	until the expiration date on the pack label. For onboard stability, refer to *Onboard Stability and Calibration Interval.*
ADVIA Centaur M-DIL 1 ReadyPack ancillary reagent pack	Multi-Diluent 1	25 mL/ reagent pack	equine serum with sodium azide (0.1%) and preservatives	2–8°C	until the expiration date on the pack label or 28 consecutive days after accessing the ancillary reagent pack

R22 **HARMFUL!** Harmful if swallowed. After contact with skin, wash
S28 immediately with plenty of soap and water. **CONTAINS:** sodium azide; multi-diluent 1.

CAUTION: This device contains material of animal origin and should be handled as a potential carrier and transmitter of disease.

NOTE: Sodium azide can react with copper and lead plumbing to form explosive metal azides. On disposal, flush reagents with a large volume of water to prevent the buildup of azides, if disposal into a drain is in compliance with federal, state, and local requirements.

For *in vitro* diagnostic use.

Loading Reagents

Ensure that the system has sufficient primary and ancillary reagent packs. For detailed information about preparing the system, refer to the system operating instructions or to the online help system.

Mix all primary reagent packs by hand before loading them onto the system. Visually inspect the bottom of the reagent pack to ensure that all particles are dispersed and resuspended. For detailed information about preparing the reagents for use, refer to Appendix C, *Handling Reagents*.

Load the ReadyPack reagent packs in the primary reagent area using the arrows as a placement guide. The system automatically mixes the primary reagent packs to maintain homogeneous suspension of the reagents. For detailed information about loading reagents, refer to the system operating instructions or to the online help system.

If automatic dilution of a sample is required, load ADVIA Centaur Multi-Diluent 1 in the ancillary reagent entry.

Onboard Stability and Calibration Interval

Onboard Stability	Calibration Interval
41.6 days	42 days

Additionally, the ADVIA Centaur BNP assay requires a two-point calibration:

- when changing lot numbers of primary reagent packs
- when replacing system components
- when quality control results are repeatedly out of range

NOTE:

- Discard the primary reagent packs at the end of the onboard stability interval.
- Do not use reagents beyond the expiration date.

Master Curve Calibration

The ADVIA Centaur BNP assay requires a Master Curve calibration when using a new lot number of Lite Reagent and Solid Phase. For each new lot number of Lite Reagent and Solid Phase, use the barcode reader or keyboard to enter the Master Curve values on the system. The Master Curve card contains the Master Curve values. For detailed information about entering calibration values, refer to the system operating instructions or to the online help system.

Quality Control

For detailed information about entering quality control values, refer to the system operating instructions or to the online help system.

To monitor system performance and chart trends, as a minimum requirement, quality control samples should be assayed on each day that samples are analyzed. Quality control samples should also be assayed when performing a two-point calibration. Treat all quality control samples the same as patient samples.

For quality control of the ADVIA Centaur BNP assay, use the Siemens Healthcare Diagnostics BNP 1,2,3 QC material or an equivalent quality control material. Refer to the quality control product insert for the suggested Expected Values.

If the quality control results do not fall within the Expected Values or within the laboratory's established values, do not report results. Take the following actions:

- Verify that the materials are not expired.
- Verify that required maintenance was performed.
- Verify that the assay was performed according to the instructions for use.
- Rerun the assay with fresh quality control samples.
- If necessary, contact your local technical support provider or distributor for assistance.

Sample Volume

This assay requires 100 µL of sample for a single determination. This volume does not include the unusable volume in the sample container or the additional volume required when performing duplicates or other tests on the same sample. Refer to *Dilutions* for information about samples with values above the assay range. For detailed information about determining the minimum required volume, refer to *Sample Volume Requirements* in the *ADVIA Centaur Reference Manual.*

NOTE: The sample volume required to perform onboard dilution differs from the sample volume required to perform a single determination. Refer to the following information for the sample volume required to perform onboard dilutions:

Dilution	Sample Volume (µL)
1:2	150
1:5	60
1:10	30

Assay Procedure

For detailed procedural information, refer to the system operating instructions or to the online help system.

Procedural Notes

Calculations

For detailed information about how the system calculates results, refer to the system operating instructions or to the online help system.

The system reports BNP results in pg/mL (common units) or pmol/L (SI units), depending on the units defined when setting up the assay. The conversion formula is 1 pg/mL = 0.289 pmol/L.

Dilutions

- Samples with levels of BNP greater than 5000 pg/mL (1445 pmol/L) must be diluted and retested to obtain accurate results.
- Patient samples can be automatically diluted by the system or prepared manually.
- For automatic dilutions, ensure that ADVIA Centaur Multi-Diluent 1 is loaded and set the system parameters as follows:

  Dilution point: ≤ 5000 pg/mL (≤ 1445 pmol/L)

  Dilution factor: 2, 5, 10

  For detailed information about automatic dilutions, refer to the system operating instructions or to the online help system.
- Manually dilute patient samples when patient results exceed the linearity of the assay using automatic dilution, or when laboratory protocol requires manual dilution.

  NOTE: For manual dilution, time from dilution to measurement is important in obtaining optimum dilution recovery. Diluted patient samples must be assayed within 30 minutes of dilution in order to achieve accurate dilution recovery. To achieve optimal dilution recovery, it is suggested that manual dilutions be prepared and immediately processed via the STAT queue.
- Use Multi-Diluent 1 to manually dilute patient samples, and then load the diluted sample in the sample rack, replacing the undiluted sample.
- Ensure that results are mathematically corrected for dilution. If a dilution factor is entered when scheduling the test, the system automatically calculates the result.

High-Dose Hook Effect

Human plasma spiked to BNP levels up to 100,000 pg/mL (28,900 pmol/L) do not demonstrate a paradoxical decrease in the RLUs (high-dose hook effect).

Disposal

Dispose of hazardous and biologically contaminated materials according to the practices of your institution. Discard all materials in a safe and acceptable manner and in compliance with all federal, state, and local requirements.

Limitations

This test has been evaluated with plasma using EDTA as the anticoagulant. Serum, sodium citrate, lithium heparin, and sodium fluoride sample tubes have also been tested and are not recommended.

The results of the ADVIA Centaur BNP assay should always be assessed in conjunction with the patient's medical history, clinical evaluation and other diagnostic procedures.

Siemens ADVIA Centaur BNP test results should not be used interchangeably with other manufacturers' BNP assays, nor should Siemens ADVIA Centaur BNP test results be used interchangeably with NT-proBNP assay results.

Heterophilic antibodies in human serum can react with reagent immunoglobulins, interfering with *in vitro* immunoassays.[42] Patients routinely exposed to animals or to animal serum products can be prone to this interference and anomalous values may be observed. Additional information may be required for diagnosis.

Specimens that are . . .	Demonstrate ≤ 5% change in results up to . . .
lipemic	800 mg/dL of triglycerides
	1000 mg/dL of cholesterol
uremic	200 mg/dL of urea
	2.5 mg/dL of creatinine
icteric	25 mg/dL of unconjugated bilirubin

Specimens that are . . .	Demonstrate ≤ 7% change in results up to . . .
icteric	25 mg/dL of conjugated bilirubin
proteinemic	5.3 g/dL of human IgG

Specimens that are . . .	Demonstrate ≤ 10% change in results up to . . .
hemolyzed	100 mg/dL of hemoglobin

The following drugs were added to a human plasma-based sample at two times the maximum therapeutic dosage and evaluated for potential interference in the ADVIA Centaur BNP assay. The results demonstrated a ≤ 10% interference from each drug at the following concentrations.

Drug	Drug Concentration	Drug	Drug Concentration
Acetaminophen	12 µg/mL	Indomethacin	16 µg/mL
Acetylsalicylic acid	200 µg/mL	Isosorbide dinitrate	4 µg/mL
Allopurinol	240 µg/mL	Lisinopril	16 µg/mL
Amiodarone	20 µg/mL	Lovastatin	16 µg/mL
Ampicillin	200 µg/mL	L-thyroxine	46 pg/mL
Ascorbic Acid	24 µg/mL	Methyldopa	100 µg/mL
Amlodipine Besylate	4 µg/mL	Milrinone lactate	2.4 µg/mL
Atenolol	40 µg/mL	Nicotine	1.6 µg/mL
Atorvastatin	32 µg/mL	Nicotinic Acid	40 µg/mL
Biotin	30 ng/mL	Nifedipine	36 µg/mL
Caffeine	30 µg/mL	Nitrofurantoin	40 µg/mL
Captopril	40 µg/mL	Nitroglycerin	0.16 µg/mL
Chloramphenicol	50 µg/mL	Oxazepam	12 µg/mL
Clopidogrel Bisulfate	30 µg/mL	Oxytetracycline	100 µg/mL
Creatinine	110 µg/mL	Phenobarbital	40 µg/mL
Cyclosporine	40 µg/mL	Phenytoin	40 µg/mL
Diclofenac	60 µg/mL	Probenecid	200 µg/mL
Digitoxin	60 ng/mL	Procainamide	20 µg/mL
Digoxin	4 ng/mL	Propranolol	64 µg/mL
Diltiazem	120 µg/mL	Quinidine	20 µg/mL
Dipyridamole	30 µg/mL	Simvastatin	32 µg/mL
Dopamine HCl	116 pg/mL	Spironolactone	40 µg/mL
Enalapril Maleate	16 µg/mL	Sulfamethoxazole	320 µg/mL
Erythromycin	100 µg/mL	Theophylline	40 µg/mL
Furosemide	16 µg/mL	Trimethoprim	64 µg/mL
Heparin	8 U/mL	Verapamil	96 µg/mL
Hydralazine	20 µg/mL	Warfarin	4 µg/mL
Hydrochlorothiazide	20 µg/mL		

Expected Results

BNP concentrations in the Reference Group are shown in the tables below. The decision threshold for diagnosing heart failure was determined based on the BNP level at the 95th percentile of the Reference Group. The most appropriate decision threshold for determining heart failure apparent from these distributions is 100 pg/mL. This BNP value translates into a general specificity of the test of greater than 97%.

The decision threshold for predicting survival and future heart failure in patients with acute coronary syndromes is 80 pg/mL.

As with all *in vitro* diagnostic assays, each laboratory should determine its own reference range(s) for the diagnostic evaluation of patient results.[43]

Reference Group

To establish the expected results for the ADVIA Centaur BNP assay, the circulating BNP concentration was determined from 1521 individuals without heart failure (785 women and 736 men). This population included apparently healthy individuals and individuals with hypertension, diabetes, renal insufficiency, and chronic obstructive pulmonary disease. The descriptive statistics for BNP concentrations in the population without heart failure are shown in the following tables. These values are representative of the results obtained from clinical studies. Published research indicates that BNP levels increase with age in the general population with the highest values seen in individuals greater than 75 years of age.[44] In this subgroup of patients, age needs to be taken into consideration for accurate interpretation of test results.

Reference Group: All

		Age Group				
	All	*< 45 years*	*45–54 years*	*55–64 years*	*65–74 years*	*75 + years*
Mean, pg/mL	23.2	11.9	15.6	19.5	28.3	60.3
SD, pg/mL	32.5	12.9	15.9	22.6	25.4	73.0
Median, pg/mL	14.4	8.6	10.4	13.8	22.1	43.7
95th Percentile, pg/mL	70.8	33.3	46.7	53.2	72.3	176
% < 100 pg/mL	97.4	99.7	99.7	98.8	97.0	85.5
Minimum, pg/mL	< 2	< 2	< 2	< 2	< 2	< 2
Maximum, pg/mL	576	128	119	286	164	576
N	1521	317	291	403	365	145

Reference Group: Males

		Age Group				
	All	*< 45 years*	*45–54 years*	*55–64 years*	*65–74 years*	*75 + years*
Mean, pg/mL	17.9	9.1	11.2	14.5	25.8	41.9
SD, pg/mL	22.9	9.4	11.8	13.9	25.1	48.8
Median, pg/mL	11.3	5.9	7.6	11.9	17.8	26.1
95th Percentile, pg/mL	54.3	29.4	32.8	38.8	67.6	121
% < 100 pg/mL	98.6	100	100	99.5	96.8	94.6
Minimum, pg/mL	< 2	< 2	< 2	< 2	< 2	< 2
Maximum, pg/mL	250	56.6	88.9	132	151	250
N	736	129	140	223	188	56

Reference Group: Females

		Age Group				
	All	< 45 years	45–54 years	55–64 years	65–74 years	75 + years
Mean, pg/mL	28.1	13.8	19.8	25.6	31.0	71.9
SD, pg/mL	38.8	14.6	18.0	29.0	25.5	82.9
Median, pg/mL	18.5	10.4	14.8	19.4	25.7	54.3
95th Percentile, pg/mL	86.1	35.9	56.7	75.5	72.9	167
% < 100 pg/mL	96.3	99.5	99.3	97.8	97.1	79.8
Minimum, pg/mL	< 2	< 2	< 2	< 2	< 2	< 2
Maximum, pg/mL	576	128	119	286	164	576
N	785	188	151	180	177	89

Patients with Heart Failure

To establish the expected results for the ADVIA Centaur BNP assay in individuals with heart failure, plasma samples were obtained from 722 patients diagnosed with heart failure (264 women and 458 men). The descriptive statistics for BNP concentrations in patients with heart failure are presented in the following tables. These values are representative of the results obtained from clinical studies. In addition, laboratories should be aware of their respective institution's current practice for the evaluation of heart failure.

Heart Failure Population: All

		NYHA Functional Class			
	All	NYHA I	NYHA II	NYHA III	NYHA IV
Mean, pg/mL	505	178	270	525	1134
SD, pg/mL	711	347	402	576	1141
Median, pg/mL	262	64.3	130	355	843
5th percentile, pg/mL	10.8	1.6	5.4	21.1	109
95th percentile, pg/mL	1873	772	999	1696	3157
% ≥ 100 pg/mL	72.6	43.1	58.7	82.0	95.8
Minimum, pg/mL	< 2	< 2	< 2	< 2	4.0
Maximum, pg/mL	6989	2310	3107	4052	6989
N	722	72	242	289	119

Heart Failure Population: Males

		NYHA Functional Class			
	All	NYHA I	NYHA II	NYHA III	NYHA IV
Mean, pg/mL	518	121	308	542	1214
SD, pg/mL	726	135	475	588	1200
Median, pg/mL	245	77.7	135	339	950
5th percentile, pg/mL	10.7	3.9	4.4	23.2	71.5
95th percentile, pg/mL	1946	400	1280	1852	3157
% ≥ 100 pg/mL	72.9	44.7	61.3	81.4	93.9
Minimum, pg/mL	< 2	< 2	< 2	< 2	33.7
Maximum, pg/mL	6989	552	3107	3503	6989
N	458	47	150	194	66

Heart Failure Population: Females

		NYHA Functional Class			
	All	*NYHA I*	*NYHA II*	*NYHA III*	*NYHA IV*
Mean, pg/mL	482	285	207	492	1034
SD, pg/mL	687	551	228	556	1068
Median, pg/mL	291	62.5	117	355	779
5th percentile, pg/mL	11.0	0	9.5	15.9	115
95th percentile, pg/mL	1575	1447	552	1518	2970
% ≥ 100 pg/mL	72.0	40.0	54.3	83.2	98.1
Minimum, pg/mL	< 2	< 2	< 2	4.8	4.0
Maximum, pg/mL	5845	2310	1231	4052	5845
N	264	25	92	94	53

These results show that there is a relationship between the severity of the clinical signs and symptoms of heart failure and the median BNP concentrations of each NYHA functional class. The proportional increase in BNP concentration is greater than 2 fold as heart failure severity increases from Class I to II, II to III, and III to IV. Siemens BNP test results should not be used interchangeably with other manufacturers' BNP assays, nor should Siemens BNP test results be used interchangeably with NT-proBNP assay results.

Interpretation of the Results

The Receiver Operator Curve (ROC) compares clinical sensitivity and specificity at various decision thresholds. The ROC analysis for the ADVIA Centaur BNP assay is presented in the following figure. The AUC for the ADVIA Centaur BNP assay is 0.919 with a 95% confidence interval (CI) of 0.904 to 0.934.

Receiver Operator Curve
Reference Group (n = 1521) vs. Heart Failure Population (n = 722)

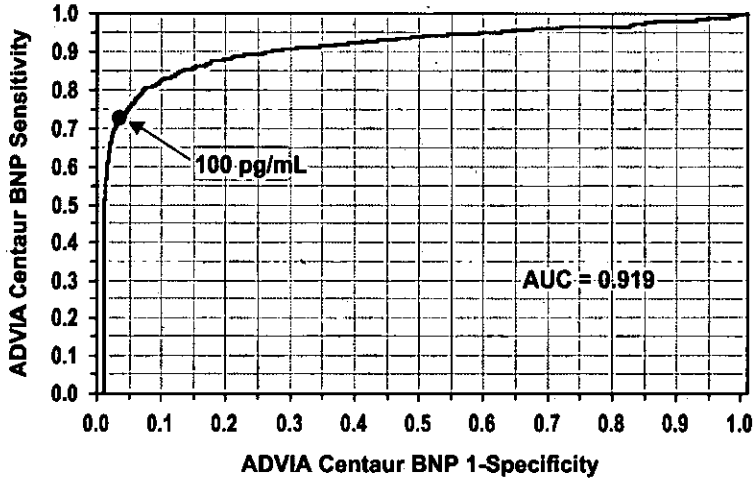

A box and whiskers plot for the clinical study population is also presented below, with a horizontal dashed line representing the suggested decision threshold of 100 pg/mL.

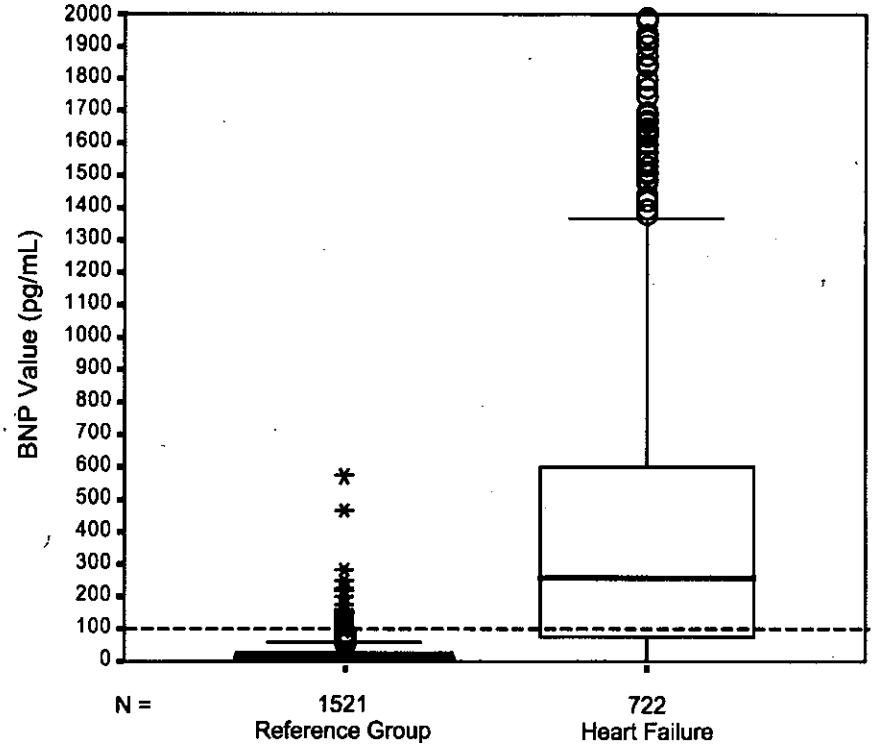

The clinical sensitivity and specificity of the ADVIA Centaur BNP assay using a decision threshold of 100 pg/mL for various age groups within each gender are presented in the following tables.

Clinical Sensitivity and Specificity vs. Age and Gender

Males

	Age Group				
	< 45 years	*45–54 years*	*55–64 years*	*65–74 years*	*75 + years*
% Sensitivity	58.7% (37/63)	49.2% (31/63)	69.9% (86/123)	83.7% (87/104)	88.6% (93/105)
95% Confidence Interval	40.4–71.0	36.4–62.1	61.0–77.9	75.1–90.2	80.9–93.9
% Specificity	100% (129/129)	100% (140/140)	99.5% (222/223)	96.8% (182/188)	94.6% (53/56)
95% Confidence Interval	97.2–100	97.4–100	97.6–100	93.2–98.8	85.1–98.9

Females

	Age Group				
	< 45 years	*45–54 years*	*55–64 years*	*65–74 years*	*75 + years*
% Sensitivity	45.5% (10/22)	56.3% (18/32)	60.4% (29/48)	68.9% (31/45)	87.2% (102/117)
95% Confidence Interval	24.4–67.8	37.7–73.7	45.3–74.2	53.4–81.8	79.7–92.6
% Specificity	99.5% (187/188)	99.3% (150/151)	97.8% (176/180)	97.2% (172/177)	79.8% (71/89)
95% Confidence Interval	97.1–100	96.4–100	94.4–99.4	93.5–99.0	69.9–87.6

Prognostic Utility in Patients with Acute Coronary Syndromes

Two independent retrospective studies have demonstrated the prognostic utility of BNP in patients with ACS. In the first study, BNP was assayed on 438 patients with myocardial infarction (MI) from the ENTIRE-TIMI 23 multi-national trial.[45] The baseline BNP level was significantly higher in patients who died within 30 days (n=15, 89 pg/mL; 25th–75th, 40–192 pg/mL) compared to survivors (n = 423, 15 pg/mL; 25th–75th, 8.8–32 pg/mL, p<0.0001). BNP levels greater than 80 pg/mL were associated with a substantially higher risk of death through 30 days of follow-up (17.4% vs. 1.8%, p<0.0001). The odds ratio for death within 30 days for patients with BNP levels greater than 80 pg/mL was 11.5. The odds ratio for death within 30 days for patients with BNP levels greater than 80 pg/mL, adjusted for age, history of hypertension, and prior angina, was 8.3 with a 95% confidence interval of 2.7 to 25.8. Patients with elevated BNP levels also had an increased risk of composite end points for death and heart failure combined (23.9% vs. 5.1%, p<0.0001). The odds ratio for death or heart failure within 30 days for patients with BNP levels greater than 80 pg/mL was 5.8. The odds ratio for death or heart failure within 30 days for patients with BNP levels greater than 80 pg/mL, adjusted for age, history of heart failure, history of hypertension, and prior angina, was 3.6 with a 95% confidence interval of 1.5 to 8.8. Elevated levels of BNP at initial presentation are associated with an increased risk of mortality in patients with MI.[34]

Another study was performed on 2525 patients with acute coronary syndromes. Patients with a BNP level of more than 80 pg/ml were significantly more likely to die, have a new recurrent infarction, or have new or progressive heart failure than those with a level of 80 pg/ml or less. After adjustment for other independent predictors of the long-term risk of death, a BNP level of more than 80 pg/ml remained significantly associated with an increased 10-month mortality rate (P= 0.04). [32]

Method Comparison

For 949 samples in the range of 0 to 1290 pg/mL (0 to 372.8 pmol/L), the relationship between the ADVIA Centaur BNP assay and the predicate device is described by the Passing & Bablok regression equation:

ADVIA Centaur BNP = 0.74 (Predicate Device) - 0.60 pg/mL

Correlation coefficient (r) = 0.90

Passing & Bablok method comparison statistics:

	Coefficient	*95% CI*
Intercept	-0.60	-2.97–1.55
Slope	0.74	0.72–0.77

Analytical Comparison and Clinical Agreement

A paired comparison was performed at 2 clinical trial sites to assess the relationship of the ADVIA Centaur BNP assay to the predicate device. A total of 167 patients with heart failure (HF; clinical diagnoses of Class I–IV) and 20 individuals without heart failure (non-HF) were compared for both analytical and clinical agreement at a decision threshold of 100 pg/mL.

Analytical Comparison: ADVIA Centaur vs. Predicate Device

		Predicate Device		
		≥ 100 pg/mL	*< 100 pg/mL*	*Total*
ADVIA Centaur	*≥ 100 pg/mL*	145	4	149
	< 100 pg/mL	6	32	38
	Total	151	36	187

	Estimate	*95% Confidence Interval*
% Analytical Agreement	94.7% (177/187)	90.4–97.4%

Clinical Agreement: ADVIA Centaur BNP

		Clinical Status		
		HF	Non-HF	Total
ADVIA Centaur	≥ 100 pg/mL	146	3	149
	< 100 pg/mL	21	17	38
	Total	167	20	187

	Estimate	95% Confidence Interval
% Clinical Agreement	87.2% (163/187)	81.5–91.6%
% Sensitivity	87.4% (146/167)	81.4–92.0%
% Specificity	85.0% (17/20)	62.1–96.8%

Clinical Agreement: Predicate Device

		Clinical Status		
		HF	Non-HF	Total
Predicate Device	≥ 100 pg/mL	146	5	151
	< 100 pg/mL	21	15	36
	Total	167	20	187

	Estimate	95% Confidence Interval
% Clinical Agreement	86.1% (161/187)	80.3–90.7%
% Sensitivity	87.4% (146/167)	81.4–92.0%
% Specificity	75.0% (15/20)	50.9–91.3%

Age-Matched Analysis

An age-matched analysis of the clinical data was performed with the following common age distribution in the groups of individuals with and without heart failure.

Individuals less than 45 years old comprise 9% of the total number of observations, individuals 45 to 54 years old comprise 11% of the total, individuals 55 to 64 years old comprise 22% of the total, individuals 65 to 74 years old comprise 26% of the total, and individuals 75 years and older comprise 32% of the total. This age distribution reflects the prevalence of heart failure within the age groups, according to data published by the American Heart Association in the *2000 Heart and Stroke Statistical Update*, and also reflects the age structure of the United States population, according to data published by the National Center for Health Statistics in *Health, United States, 2000*. The resulting area under the ROC curve is 0.906 with a 95% confidence interval of 0.886 to 0.927. The AUC is not significantly different from the AUC described previously (0.919).

Performance Characteristics

Specificity

The ADVIA Centaur BNP assay shows high specificity for BNP. Cross-reactivity was determined by spiking each of the following compounds into a plasma sample with known BNP concentration.

$$\% \text{ cross-reactivity} = \frac{(\text{concentration of spiked sample} - \text{concentration of unspiked sample})}{(\text{concentration of compound added})} \times 100$$

Compound	Concentration Added	% Cross-reactivity
Alpha-ANP (1-28)	1000 pg/mL	ND*
NT-proBNP (1-21)	1000 pg/mL	ND
NT-proBNP (1-46)	1000 pg/mL	ND
NT-proBNP (1-76)	1000 pg/mL	ND
NT-proBNP (22-46)	1000 pg/mL	ND
NT-proBNP (47-76)	1000 pg/mL	ND
CNP (7-28)	1000 pg/mL	ND
DNP	1000 pg/mL	ND
VNP	1000 pg/mL	ND
Adrenomedullin	1000 pg/mL	ND
Aldosterone	1000 ng/mL	ND
Angiotensin I	600 pg/mL	ND
Angiotensin II	600 pg/mL	ND
Angiotensin III	1000 pg/mL	ND
Arg-Vasopressin	1000 pg/mL	ND
Renin	50 ng/mL	ND
Urodilatin	1000 pg/mL	ND

* ND = Not Detectable

Interference testing was determined according to CLSI Document EP7-A2.[46]

Analytical Sensitivity and Assay Range

The ADVIA Centaur BNP assay measures BNP concentrations up to 5000 pg/mL (1445 pmol/L) with a minimum detectable concentration (analytical sensitivity) of < 2.0 pg/mL (0.58 pmol/L). Analytical sensitivity is defined as the concentration of BNP that corresponds to the RLUs that are two standard deviations more than the mean RLUs of 20 replicate determinations of the BNP zero standard. This response is an estimate of the minimum detectable concentration with 95% confidence.

Functional Sensitivity

The functional sensitivity is defined as the lowest BNP concentration determined at a coefficient of variation of 20%. The ADVIA Centaur BNP assay functional sensitivity was determined to be 2.5 pg/mL (0.72 pmol/L).

The Total % CV profile in the assay range of 0–500 pg/mL is shown in the following figure:

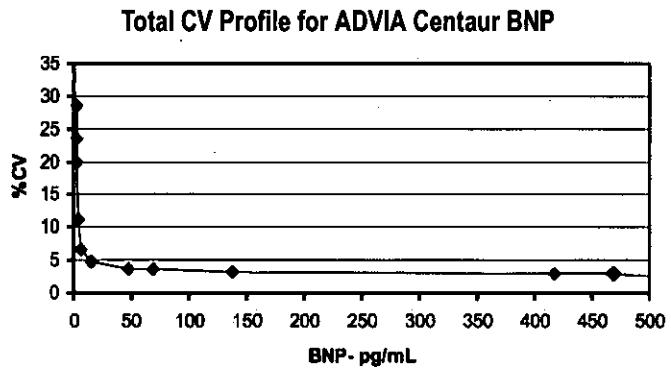

Dilution Recovery

Five human plasma samples in the range of 1480 to 4426 pg/mL (428 to 1279 pmol/L) of BNP were diluted on-board 1:2, 1:5, and 1:10 with Multi-Diluent 1 and assayed for recovery and parallelism. The recoveries ranged from 87% to 106% with a mean of 97%.

Sample	Dilution	Observed (pg/mL)	Expected (pg/mL)	Observed (pmol/L)	Expected (pmol/L)	Recovery %
1	—	4426	4426	1279	1279	
	1:2	2258	2213	653	640	102
	1:5	793	885	229	256	90
	1:10	383	443	110	128	87
	Mean					93
2	—	3729	3729	1078	1078	
	1:2	1880	1864	543	539	101
	1:5	698	746	202	216	94
	1:10	345	373	100	108	93
	Mean					96
3	—	4319	4319	1248	1248	
	1:2	2296	2159	664	624	106
	1:5	861	864	249	250	100
	1:10	412	432	119	125	95
	Mean					100
4	—	2074	2074	599	599	
	1:2	1037	1037	300	300	100
	1:5	379	415	110	120	91
	1:10	194	207	56.1	59.8	94
	Mean					95
5	—	1480	1480	428	428	
	1:2	744	740	215	214	101
	1:5	283	296	81.8	85.5	96
	1:10	150	148	43.4	42.8	101
	Mean					99
Mean						**97**

Linearity

Patient samples with high BNP concentrations were mixed in various proportions with patient samples containing low levels of BNP ranging from 6.5 to 190 pg/mL (1.9 to 55.0 pmol/L). The samples with high BNP concentrations varied from 252 to 1116 pg/mL (72.8 to 322 pmol/L). When compared to the expected value, the measured (recovered) values of BNP averaged 103% with a range of 93 to 113%.

Sample (ratio high/low)	BNP Added (pg/mL)	Observed (pg/mL)	Expected (pg/mL)	BNP Added (pmol/L)	Observed (pmol/L)	Expected (pmol/L)	% Recovery
1							
Neat		74.2	74.2		21.4	21.4	
(1:3)	76.6	141	151	22.1	40.6	43.6	93
(1:1)	153	222	227	44.3	64.1	65.7	98
(3:1)	230	287	304	66.4	82.9	87.8	94
Neat		380	380		110	110	
	Mean						95
2							
Neat		13.8	13.8		4.0	4.0	
(1:3)	59.5	81.5	73.3	17.2	23.5	21.2	111
(1:1)	118.9	150	133	34.4	43.2	38.3	113
(3:1)	178.3	201	192	51.5	58.2	55.5	105
Neat		252	252		72.7	72.7	
	Mean						110
3							
Neat		49.8	49.8		14.4	14.4	
(1:3)	80.2	133	130	23.2	38.6	37.6	103
(1:1)	160	225	210	46.4	65.0	60.8	107
(3:1)	241	286	290	69.5	82.6	83.9	98
Neat		377	371		107	107	
	Mean						103
4		190	190		55.0	55	
(1:3)	78.1	270	268	22.6	77.9	77.5	100
(1:1)	156	344	346	45.1	99.3	100	99
(3:1)	234	437	424	67.6	126	123	103
		502	502		145	145	
	Mean						101
5							
Neat		6.5	6.5		1.9	1.9	
(1:3)	277	309	284	80.2	89.3	82.1	109
(1:1)	555	606	561	160	175	162	108
(3:1)	833	866	839	241	250	242	103
Neat		1116	1116		323	323	
	Mean						107
Mean							**103**

Precision

Six samples were assayed 4 times, in 20 runs, on 2 systems (n = 160 for each sample), over a period of 20 days. The following results were obtained:

Mean (pg/mL)	Mean (pmol/L)	Within-run % CV	Run-to-run % CV	Total % CV
29.4	8.5	4.3	1.9	4.7
48.5	14	2.5	2.1	3.5
410	119	1.8	1.9	2.8
458	132	2.0	1.5	2.8
1452	420	2.0	0.5	2.3
1736	502	2.1	1.7	2.9

Standardization

The ADVIA Centaur BNP assay is traceable to an internal standard manufactured using synthetic human BNP (amino acid 77–108). Assigned calibrator doses and ranges for quality control material are traceable to this standardization.

The ADVIA Centaur BNP value assignment was adjusted based on a decision threshold that provides both high assay specificity (> 95%) and also is above the upper confidence interval of the 95th percentile of the reference population without heart failure. At 100 pg/mL, based on the outcome of clinical trials, this decision threshold exceeds both criteria with a clinical specificity of 97.4%. In clinically confirmed heart failure, 72.6% of the patients had elevations greater than 100 pg/mL.

Technical Assistance

For customer support, contact your local technical support provider or distributor.

www.siemens.com/diagnostics

References

1. Remme WJ, Swedberg K. Task Force Report: guidelines for the diagnosis and treatment of chronic heart failure. Eur Heart J 2001;22:1527-60.
2. Hunt SA, Baker DW, Chin MH, Cinquegrani MP, Feldman AM, Francis GS, Ganiats TG, Goldstein S, Gregoratos G, Jessup ML, Noble RJ, Packer M, Silver MA, Stevenson LW, Gibbons RJ, Antman EM, Alpert JS, Faxon DP, Fuster V, Jacobs AK, Hiratzka LF, Russell RO, Smith SC Jr. ACC/AHA guidelines for the evaluation and management of chronic heart failure in the adult: executive summary. A report of the American College of Cardiology/American Heart Association Task Force on Practice Guidelines. J Am Coll Cardiol. 2001;38:2101-13.
3. Stein BC, Levin RI. Natriuretic peptides: physiology, therapeutic potential, and risk stratification in ischemic heart disease. Am Heart J 1998;135:914-23.
4. Sagnella GA. Measurement and significance of circulating natriuretic peptides in cardiovascular disease. Clin Science 1998;95:519-29.
5. Suzuki T, Yamazaki T, Yazaki Y. The role of natriuretic peptides in the cardiovascular system. Cardiovasc Res 2001;51:489-94.
6. Levin ER, Gardner DG, Samson WK. Natriuretic peptides. N Engl J Med 1998;339:321-8.
7. Wilkins M, Redondo J, Brown L. The natriuretic peptide family. The Lancet 1997;349:1307-10.
8. Dickstein K. Natriuretic peptides in detection of heart failure. The Lancet 1998;35:3-4.
9. Chen HH, Burnett JC Jr. The natriuretic peptides in heart failure: diagnostic and therapeutic potentials. Proc Assoc Am Physicians 1999;111:406-16.
10. Hirata Y, Matsumoto A, Aoyagi T, Ymaoki K, Kumoro I, Suzuki T, Ashida T, Sugiyama T, Hada Y, Kuwajima I, Nishinaga M, Akioka H, Nakajima O, Nagai R, Yazaki Y. Measurement of plasma brain natriuretic peptide level as a guide for cardiac overload. Cardiovascular Res 2001;51:585-91.
11. Mair J, Hammerer-Lercher, Puschendorf B. The impact of cardiac natriuretic peptide determination on the diagnosis and management of heart failure. Clin Chem Lab Med 2001;39:571-88.

12. Clerico A, Del Ry S, Giannessi D. Measurement of cardiac natriuretic hormones (atrial natriuretic peptide, brain natriuretic peptide, and related peptides) in clinical practice: the need for a new generation of immunoassay methods. Clin Chem 2000;46:1529-34.
13. Yan W, Wu F, Morser J, Wu Q. Corin, a transmembrane cardiac serine protease, acts as a pro-atrial natriuretic peptide-converting enzyme. Proc Natl Acad Sci USA 2000;97:8525-9.
14. Kelly R, Struthers A. Are natriuretic peptides clinically useful as markers of heart failure? Ann Clin Biochem 2001;38:94-102.
15. Daly C, Fox K, Henein M. Natriuretic peptides in the diagnosis of heart disease – first amongst equals? Intl J Cardiol 2002;84:107-113.
16. Tabbibizar R, Maisel A. The impact of B-type natriuretic peptide levels on the diagnoses and management of congestive heart failure. Curr Op Cardiol 2002;17:340-45.
17. Lee SC, Stevens TL, Sandberg SM, Heublein BM, Nelson SM, Jougasaki M, Redfield MM, Burnett JC Jr. The potential of brain natriuretic peptide as a biomarker for New York Heart Association class during the outpatient treatment of heart failure. J Cardiac Failure 2002;8:149-54.
18. Lubien E, DeMaria A, Krishnaswamy P, Clopton P, Koon J, Kazanegra R, Gardetto N, Wanner E, Maisel AS. Utility of B-natriuretic peptide in detecting diastolic dysfunction: comparison with doppler velocity recordings. Circulation 2002;105:595-601.
19. Fisher Y, Filzmaier K, Stiegler H, Graf J, Fuhs S, Franke A, Janssens U, Gressner AM. Evaluation of a new, rapid bedside test for quantitative determination of B-type natriuretic peptide. Clin Chem 2001;47:591-4.
20. Maisel AS, Krishnaswamy P, Nowak RM, McCord J, Hollander JE, Duc P, Omland T, Storrow AB, Abraham WT, Wu AHB, Clopton P, Steg PG, Westheim A, Wold Knudsen C, Perez A, Kazanegra R, Herrmann H, McCullough PA. Rapid measurement of B-type natriuretic peptide in the emergency diagnosis of heart failure. New Engl J Med. 2002;347:161-7.
21. Dao Q, Krishnaswamy P, Kazanegra R, Harrison A, Amirnovin R, Lenert L, Clopton P, Alberto J, Hlavin P, Maisel AS. Utility of B-type natriuretic peptide in the diagnosis of congestive heart failure in an urgent-care setting. J Am Col Cardiol 2001;37:379-85.
22. Morrison LK, Harrison A, Krishnaswamy P, Kazanegra R, Clopton P, Maisel AS. Utility of a rapid B-type natriuretic peptide assay in differentiating congestive heart failure from lung disease in patients presenting with dyspnea. J Am Col Cardiol 2002;39;202-9.
23. McCullough PA, Nowak RM, McCord J, Hollander JE, Herrmann H, Steg PG, Duc P, Westheim A, Omland T, Wold Knudsen C, Storrow AB, Abraham WT, Lamba S, Wu AHB, Perez A, Clopton P, Krishnaswamy P, Kazanegra R, Maisel AS. B-type natriuretic peptide and clinical judgment in emergency diagnosis of heart failure: analysis from the breathing not properly (BNP) multinational study. Circulation 2002;106:416-22.
24. Wieczorek SJ, Wu AHB, Christenson R, Krishnaswamy P, Gottlieb S, Rosano T, Hager D, Gradetto N, Chiu A, Bailly KR, Maisel AS. A rapid B-type natriuretic peptide assay accurately diagnoses left ventricular dysfunction and heart failure: a multicenter evaluation. Am Heart J 2002;144:834-9.
25. Maisel AS, Koon J, Krishnaswamy P, Kazanegra R, Clopton P, Gradetto N, Morrisey NC, Chiu A, DeMaria A. Utility of B-natriuretic peptide as a rapid, point-of-care test for screening patients undergoing echocardiography to determine left ventricular dysfunction. Am Heart J 2001;141:367-74.
26. Valli N, Georges A, Corcuff JB, Barat JL, Bordenave L. Assessment of brain natriuretic peptide in patients with suspected heart failure: comparison with radionuclide ventriculography data. Clin Chim Acta 2001;306:19-26.
27. McDonagh TA, Robb SD, Murdoch DR, Morton JJ, Ford I, Morrison CE, Tunstall-Pedoe H, McMurray JJV, Dargie HJ. Biochemical detection of left-ventricular systolic dysfunction. The Lancet 1998;351:9-13.
28. Berger R, Huelsman M, Strecker K, Bojic A, Moser P, Stanek B, Pacher R. B-type natriuretic peptide predicts sudden death in patients with chronic heart failure. Circulation 2002;105:2392-97.
29. Koglin J, Pehlivanli S, Schwaiblmair M, Vogeser M, Cremer P, von Scheidt W. Role of brain natriuretic peptide in risk stratification of patients with congestive heart failure. J Am Coll Cardiol 2001;38:1934-41.
30. Cheng V, Kazanagra R, Garcia A, Lenert L, Krishnaswamy P, Gardetto N, Clopton P, Maisel A. A rapid bedside test for B-type natriuretic peptide predicts treatment outcomes in patients admitted for decompensated heart failure: a pilot study. J Am Coll Cardiol 2001;37:386-91.
31. Stanek B, Frey B, Hulsmann M, Berger R, Sturm B, Strametz-Juranek J, Bergler-Klein J, Moser P, Bjic A, Hartter E, Pacher R. Prognostic evaluation of neurohumoral plasma levels before and during beta-blocker therapy in advanced left ventricular dysfunction. J Am Coll Cardiol 2001;38:436-42.
32. DeLemos JA, Morrow DA, Bentley JH, Omland T, Sabatine MS, McCabe CH, Hall C, Cannon CP, Braunwald E. The prognostic value of B-type natriuretic peptide in patients with acute coronary syndromes. N Engl J Med 2001;345:1014-21.
33. Omland T, Aakvaag A, Bonarjee VVS, Caidahl K, Lie RT, Nilsen DWT, Sundsfjord JA, Dickstein K. Plasma brain natriuretic peptide as an indicator of left ventricular systolic function and long-term survival after acute myocardial infarction. Circulation 1996;93:1963-69.
34. Mega JL, Morrow DA, deLemos JA, Sabatine MS, Murphy SA, Rifai N, Gibson CM, Antman EM; Braunwald E. BNP at Presentation and Prognosis in Patients with ST-Elevation Myocardial Infarction: An ENTIRE-TIMI 23 Substudy. J Am Coll Cardiol. 2004;44:335-9.

35. Richards AM, Lainchbury JG, Nicholls MG, Troughton RW, Yandel TG. BNP in hormone-guided treatment of heart failure. Trends Endocrinol Metab 2002;13:151-5.
36. Johnson W, Omland T, Hall C, Lucas C, Myking OL, Collins C, Pfeffer M, Rouleau JL, Stevenson LW. Neurohormonal activation rapidly decreases after intravenous therapy with diuretics and vasodilators for class IV heart failure. J Am Coll Cardiol 2002;39:1623-9.
37. Burger AJ, Horton DP, LeJemtel T, et al. Effect of nesiritide (B-type natriuretic peptide) and dobutamine on ventricular arrhythmias in the treatment of patients with acutely decompensated congestive heart failure: the PRECEDENT study. Am Heart J 2002;144:1102-08.
38. Maisel AS, Cremo R, Gardetto N. et al. The effects of nesiritide on levels of B type natriuretic peptide (BNP) in patients admitted for decompensated heart failure [Abstr]. Circulation (Suppl II) 2002;106:II-565.
39. Shimizu H., Aono K., Masuta K., et al. Stability of brain natriuretic peptide (BNP) in human blood samples. Clinica Chim Acta 1999;285:169-72.
40. Shimizu H, Aono K, Masuta K, Asada H, Misaki A, Teraoka H. Degradation of human brain natriuretic peptide (BNP) by contact activation of blood coagulation system. Clin Chim Acta 2001;305:181-6.
41. Clinical and Laboratory Standards Institute (formerly NCCLS). *Procedures for the Handling and Processing of Blood Specimens; Approved Guideline - Third Edition.* Wayne, PA: Clinical and Laboratory Standards Institute; 2004. NCCLS Document H18-A3.
42. Boscato LM, Stuart MC. Heterophilic antibodies: a problem for all immunoassays. Clin Chem 1988;34:27–33.
43. Clinical and Laboratory Standards Institute (formerly NCCLS). *How to Define and Determine Reference Intervals in the Clinical Laboratory; Approved Guideline - Second Edition.* Wayne, PA: Clinical and Laboratory Standards Institute; 2000. NCCLS Document C28-A2.
44. Redfield MM, Rodheffer RJ, Jacobsen SJ, Mahnoney DW, Bailey KR, Burnett JC. Plasma brain natriuretic peptide concentration: impact of age and gender. J Am Coll Cardiol 2002;40:976-82.
45. TIMI Study Group. The thrombolysis in myocardial infarction (TIMI) trial; Phase I findings. New Engl J Med 1985;312:932-936.
46. Clinical and Laboratory Standards Institute (formerly NCCLS). *Interference Testing in Clinical Chemistry; Approved Guideline - Second Edition.* Wayne, PA: Clinical and Laboratory Standards Institute; 2005. NCCLS document EP7-A2.

ADVIA Centaur and ReadyPack are trademarks of Siemens Healthcare Diagnostics.

© 2008 Siemens Healthcare Diagnostics Inc. All rights reserved.

US Pats 5,609,822; 5,788,928; 5,656,426; 5,114,923

Origin: US

Siemens Healthcare Diagnostics Inc.
Tarrytown, NY 10591-5097 USA

EC REP Siemens Healthcare Diagnostics Ltd.
Sir William Siemens Sq.
Frimley, Camberley, UK GU16 8QD

Siemens Healthcare
Diagnostics Pty Ltd
885 Mountain Highway
Bayswater Victoria 3153
Australia

シーメンスヘルスケア・
ダイアグノスティクス株式会社
東京都品川区東五反田 3−20−14
Siemens Healthcare Diagnostics
輸入

BR

Assay for CA 27.29

Assay Summary

Sample Type	*Serum*
Sample Volume	*25 µL*
Calibrator	*G*
Sensitivity and Assay Range	*3.5–450 U/mL*

Contents

REF	Contents	Number of Tests
03896216 (116735)	5 ReadyPack® primary reagent packs containing ADVIA Centaur® BR Lite Reagent and Solid Phase ADVIA Centaur BR Master Curve card	250
or		
02419937 (116734)	1 ReadyPack primary reagent pack containing ADVIA Centaur BR Lite Reagent and Solid Phase ADVIA Centaur BR Master Curve card	50

For a definition of symbols used in product labeling, refer to *Understanding the Symbols* in Appendix D of the Assay Guide.

Intended Use

The ADVIA Centaur BR assay is an *in vitro* diagnostic test for the quantitative serial determination of cancer antigen CA 27.29 in human serum using the ADVIA Centaur and ADVIA Centaur XP systems. The test is intended for use as an aid in monitoring patients previously treated for Stage II or Stage III breast cancer. Serial testing for CA 27.29 in the serum of patients who are clinically free of disease should be used in conjunction with other clinical methods used for the early detection of cancer recurrence. The test is also intended for use as an aid in the management of breast cancer patients with metastatic disease by monitoring the progression or regression of disease in response to treatment.

WARNING: The concentration of CA 27.29 in a given specimen, as determined by assays from different manufacturers, can vary because of differences in assay methods and reagent specificity. The results reported by the laboratory to the physician must include the identity of the assay for CA 27.29 used. Values obtained with different assay methods cannot be used interchangeably. If, in the course of monitoring a patient, the assay method used for determining serial levels of CA 27.29 is changed, the laboratory must perform additional serial testing to confirm baseline values.

United States federal law restricts this device to sale and distribution by or on the order of a physician, or to a clinical laboratory; and use is restricted to, by, or on the order of a physician

Materials Required but Not Provided

REF	Description	Contents
02034474 (112777)	Calibrator G	6 vials of low calibrator CAL L
		6 vials of high calibrator CAL H
or		
06354201 (112776)	Calibrator G	2 vials of low calibrator CAL L
		2 vials of high calibrator CAL H
06288756 (116746)	ADVIA Centaur BR Pretreatment Reagent PRE	2 ReadyPack ancillary reagent packs containing 10.0 mL/pack
03395373	Ancillary Probe Wash 1 APW 1	2 ReadyPack ancillary reagent packs containing 25 mL per pack

Optional Reagents

REF	Description	Contents
07907174 (110313)	ADVIA Centaur Multi-Diluent 1 M-DIL 1	6 ReadyPack ancillary reagent packs containing 25 mL/pack
or		
07293184 (110312)	ADVIA Centaur Multi-Diluent 1 M-DIL 1	2 ReadyPack ancillary reagent packs containing 25 mL/pack
09348792 (672177)	Multi-Diluent 1 M-DIL 1	50 mL/vial
04554629 (112771)	BR Master Curve Material	7 x 1 mL

Summary and Explanation of the Test

Breast cancer is the most common cancer among women in the United States. There will be an estimated 184,600 new cases of this disease and 44,700 deaths expected in 1997.[1] While most newly diagnosed cases of breast cancer present with only local disease, where the 5 year survival rate is 96%, 42% are diagnosed with disease outside the breast.[2] For these women, the 5 year survival rate is 76% for those with regional disease and only 20% for those with distant metastases.[3] The vast majority of breast cancer deaths are from advanced, disseminated disease. Although many therapeutic modalities exist for the treatment of metastatic disease, most breast cancers usually become refractory to specific drugs and require second and third line regimens. A circulating tumor marker, such as CA 27.29, which can monitor response to therapy and can indicate disease status is a valuable tool in the management of these patients.

CA 27.29 is a highly polymorphic glycoprotein belonging to the mucin family and is the product of the MUC-1 gene.[4] It is most useful using serial measurements to monitor both the course of disease and response to therapy because of the direct correlation of changing levels of CA 27.29 with clinical status.[5,6] In patients with known metastases, a reduction in levels of this marker indicates a good response to treatment, while increasing levels indicate resistance to therapy and progressive disease and justify further clinical evaluation and regular monitoring.[7] It has also recently been shown that an elevation of CA 27.29 levels above the upper limit of normal in patients with no clinical evidence of disease is an early indicator of recurrence.[8] An elevated serum CA 27.29 level in patients in remission of Stage II or III breast cancer provided a positive predictive value of 83.3% for recurrent disease, with an average lead time of 5.3 months before recurrence was clinically established.[8]

Assay Principle

The ADVIA Centaur BR assay is a fully automated, competitive immunoassay using direct, chemiluminescent technology. The Lite Reagent is composed of a monoclonal mouse antibody specific for CA 27.29, labeled with acridinium ester. The antibody used in the assay, MAb B27.29, binds to a peptide epitope in the tandem repeat region of the MUC-1 gene product. The Solid Phase is composed of purified CA 27.29, which is covalently coupled to paramagnetic particles. After onboard pretreatment, the sample is incubated with both Lite Reagent and Solid Phase simultaneously for 7.5 minutes.

The system automatically performs the following actions:

- dispenses 25 µL of sample and 50 µL of Pretreatment Reagent into a cuvette
- dispenses 50 µL of Lite Reagent and 250 µL of Solid Phase and incubates for 7.5 minutes at 37°C
- separates, aspirates, and washes the cuvettes with reagent water[9]
- dispenses 300 µL each of Acid Reagent and Base Reagent to initiate the chemiluminescent reaction
- reports results according to the selected option, as described in the system operating instructions or in the online help system

An inverse relationship exists between the amount of CA 27.29 present in the patient sample and the amount of relative light units (RLUs) detected by the system.

Specimen Collection and Handling

Serum is the recommended sample type for this assay.

Plasma samples should not be used because their performance in this assay has not been determined.

The following recommendations for handling and storing blood samples are furnished by the Clinical and Laboratory Standards Institute (CLSI, formerly NCCLS):[10]

- Collect all blood samples observing universal precautions for venipuncture.
- Allow samples to clot adequately before centrifugation.
- Keep tubes stoppered and upright at all times.
- Do not use samples that have been stored at room temperature for longer than 8 hours.
- Tightly cap and refrigerate specimens at 2° to 8°C if the assay is not completed within 8 hours.
- Freeze samples at or below -20°C if the sample is not assayed within 48 hours.
- Freeze samples only once and mix thoroughly after thawing.

Before placing samples on the system, ensure that samples have the following characteristics:

- Samples are free of fibrin or other particulate matter. Remove particulates by centrifugation at 1000 x g for 15 to 20 minutes.
- Samples are free of bubbles.

Reagents

Store the reagents upright at 2–8°C.
Mix all primary reagent packs by hand before loading them onto the system. Visually inspect the bottom of the reagent pack to ensure that all particles are dispersed and resuspended. For detailed information about preparing the reagents for use, refer to Appendix C, Handling Reagents.

Reagent Pack	Reagent	Volume	Ingredients	Storage	Stability
ADVIA Centaur BR ReadyPack primary reagent pack	Lite Reagent	2.5 mL/ reagent pack	monoclonal mouse anti-CA 27.29 antibody (~1.2 µg/mL) labeled with acridinium ester in buffered saline with preservatives	2–8°C	until the expiration date on the pack label. For onboard stability, refer to *Onboard Stability and Calibration Interval.*
	Solid Phase	12.5 mL/ reagent pack	human CA 27.29 (~0.72 U/mL) covalently coupled to paramagnetic particles in buffer with preservatives	2–8°C	until the expiration date on the pack label. For onboard stability, refer to *Onboard Stability and Calibration Interval.*
ADVIA Centaur BR Pretreatment PRE ReadyPack ancillary reagent pack	Pretreatment Reagent	10.0 mL/ reagent pack	sodium hydroxide (0.24N)	2–8°C	until the expiration date on the pack label or 28 consecutive days after accessing the ancillary reagent pack
ADVIA Centaur M-DIL 1 ReadyPack ancillary reagent pack	Multi-Diluent 1	25.0 mL/ reagent pack	equine serum with sodium azide (0.1%) and preservatives	2–8°C	until the expiration date on the pack label or 28 consecutive days after accessing the ancillary reagent pack
ADVIA Centaur APW 1 ReadyPack ancillary reagent pack*	Probe Wash	25.0 mL/ reagent pack	0.4 N sodium hydroxide	2–8°C	until the expiration date on the pack label or 14 consecutive days after accessing the ancillary reagent pack

R36/38 S24/25 S26 **Irritant!** Irritating to eyes and skin. Avoid contact with skin and eyes. In case of contact with eyes, rinse immediately with plenty of water and seek medical advice. **Contains:** sodium hydroxide; Pretreatment Reagent

CAUTION! POTENTIAL BIOHAZARD: Contains human source material. While each human serum or plasma donor unit used in the manufacture of this product was tested by FDA-approved methods and found nonreactive for hepatitis B surface antigen (HBsAg), antibody to hepatitis C (HCV), and antibody to HIV-1/2, all products manufactured using human source material should be handled as potentially infectious. Because no test method can offer complete assurance that hepatitis B or C viruses, HIV, or other infectious agents are absent, these products should be handled according to established good laboratory practices.[11-13]

CAUTION: This device contains material of animal origin and should be handled as a potential carrier and transmitter of disease.

NOTE: Sodium azide can react with copper and lead plumbing to form explosive metal azides. On disposal, flush reagents with a large volume of water to prevent the buildup of azides, if disposal into a drain is in compliance with federal, state, and local requirements.

For *in vitro* diagnostic use.

Loading Reagents

Ensure that the system has sufficient primary and ancillary reagent packs. For detailed information about preparing the system, refer to the system operating instructions or to the online help system.

NOTE: Mix all primary reagent packs by hand before loading them onto the system. Visually inspect the bottom of the reagent pack to ensure that all particles are dispersed and resuspended. For detailed information about preparing the reagents for use, refer to Appendix C, *Handling Reagents*.

Load the ReadyPack reagent packs in the primary reagent area using the arrows as a placement guide. The system automatically mixes the primary reagent packs to maintain homogeneous suspension of the reagents. Load the BR Pretreatment Reagent ReadyPack reagent pack in the ancillary reagent entry. For detailed information about loading reagents, refer to the system operating instructions or to the online help system.

If automatic dilution of a sample is required, load ADVIA Centaur Multi-Diluent 1 in the ancillary reagent entry.

Onboard Stability and Calibration Interval

You can run the ADVIA Centaur BR assay using either the high or low volume usage option. If you use the low volume usage option, you must modify the test definition parameters for the assay. Refer to the ADVIA Centaur Reference Manual or to the online help system for instructions on modifying the Primary Reagent Stability option to USE BEYOND.

- High volume usage = use of more than one primary reagent pack within the Onboard Stability period indicated in the table for High Volume Usage.
- Low volume usage = use of less than one primary reagent pack within the Onboard Stability period indicated in the table for High Volume Usage.

High Volume Usage

NOTE:

- Discard the primary reagent packs at the end of the High Volume Usage onboard stability interval.
- Do not use reagents beyond the expiration date.

Onboard Stability	Calibration Interval
7 days	7 days

Additionally, the ADVIA Centaur BR assay requires a two-point calibration when:

- changing lot numbers of primary reagent packs.
- replacing system components.
- quality control results are repeatedly out of range.

Low Volume Usage

NOTE:

- For low volume usage, load and run only one primary reagent pack on the system at a time.
- Perform a calibration every time a fresh primary reagent pack is loaded on the system.
- Discard the primary reagent pack at the end of the Low Volume Usage onboard stability.
- When the Primary Reagent Stability option is set to USE BEYOND, the system displays a 'Verify Stability' flag when the reagent exceeds the defined onboard stability.
- Do not use reagents beyond the expiration date.

Onboard Stability	Calibration Interval
28 days	7 days

Additionally, the ADVIA Centaur BR assay requires a two-point calibration when:

- changing lot numbers of primary reagent packs.
- replacing system components.
- quality control results are repeatedly out of range.

Master Curve Calibration

The ADVIA Centaur BR assay requires a Master Curve calibration when using a new lot number of Lite Reagent and Solid Phase. For each new lot number of Lite Reagent and Solid Phase, use the barcode reader or keyboard to enter the Master Curve values on the system. The Master Curve card contains the Master Curve values. For detailed information about entering calibration values, refer to the system operating instructions or to the online help system.

Quality Control

For detailed information about entering quality control values, refer to the system operating instructions or to the online help system.

To monitor system performance and chart trends, as a minimum requirement, two levels of quality control material should be assayed on each day that samples are analyzed. Quality control samples should also be assayed when performing a two-point calibration. Treat all quality control samples the same as patient samples.

Siemens Healthcare Diagnostics recommends the use of commercially available quality control materials with at least 2 levels (low and high). A satisfactory level of performance is achieved when the analyte values obtained are within the Acceptable Control Range for the system or within your range, as determined by an appropriate internal laboratory quality control scheme.

If the quality control results do not fall within the Expected Values or within the laboratory's established values, do not report results. Take the following actions:

- Verify that the materials are not expired.
- Verify that required maintenance was performed.
- Verify that the assay was performed according to the instructions for use.
- Rerun the assay with fresh quality control samples.
- If necessary, contact your local technical support provider or distributor for assistance.

Sample Volume

This assay requires 25 µL of sample for a single determination. This volume does not include the unusable volume in the sample container or the additional volume required when performing duplicates or other tests on the same sample. Sample predilution is not required. Refer to *Dilutions* for information about samples with values above the assay range. For detailed information about determining the minimum required volume, refer to *Sample Volume Requirements* in the *ADVIA Centaur Reference Manual.*

Assay Procedure

For detailed procedural information, refer to the system operating instructions or to the online help system.

Procedural Notes

Calculations

For detailed information about how the system calculates results, refer to the system operating instructions or to the online help system.

The system reports serum CA 27.29 results in U/mL.

Dilutions

- Serum samples with levels of CA 27.29 greater than 450 U/mL must be diluted and retested to obtain accurate results.
- Patient samples can be automatically diluted by the system or prepared manually.
- For automatic dilutions, ensure that ADVIA Centaur Multi-Diluent 1 is loaded and set the system parameters as follows:

  Dilution point: ≤ 450 U/mL

  Dilution factor: 10, 20

  For detailed information about automatic dilutions, refer to the system operating instructions or to the online help system.
- Manually dilute the patient samples when patient results exceed the linearity of the assay using automatic dilution, or when laboratory protocol requires manual dilution.
- Use Multi-Diluent 1 to manually dilute patient samples, and then load the diluted sample in the sample rack, replacing the undiluted sample.
- Ensure that results are mathematically corrected for dilution. If a dilution factor is entered when scheduling the test, the system automatically calculates the result.

Disposal

Dispose of hazardous and biologically contaminated materials according to the practices of your institution. Discard all materials in a safe and acceptable manner and in compliance with all federal, state, and local requirements.

Limitations

NOTE: Do not interpret levels of CA 27.29 as absolute evidence of the presence or the absence of malignant disease. Before treatment, patients with confirmed breast carcinoma frequently have levels of CA 27.29 within the range observed in healthy individuals. Additionally, elevated levels of CA 27.29 can be observed in patients with nonmalignant diseases. Measurements of CA 27.29 should always be used in conjunction with other diagnostic procedures, including information from the patient's clinical evaluation.

WARNING: Do not use the ADVIA Centaur BR assay as a screening test or for diagnosis. Normal levels of CA 27.29 do not always preclude the presence of disease.

Heterophilic antibodies in human serum can react with reagent immunoglobulins, interfering with *in vitro* immunoassays.[14] Patients routinely exposed to animals or to animal serum products can be prone to this interference and anomalous values may be observed. Additional information may be required.

Exercise caution when interpreting ADVIA Centaur BR levels during pregnancy.[15]

The concentration of CA 27.29 in a given specimen determined with assays from different manufacturers can vary because of differences in assay methods, calibration, and reagent specificity. CA 27.29 determined with different manufacturers' assays will vary depending on the method of standardization and antibody specificity. Therefore, it is important to use assay-specific values to evaluate quality control results.

Endogenous interferents, such as high concentrations of hemoglobin, lipids, bilirubin and total protein, had no effect beyond the limits of random within-run variations. Mean recoveries were within 5% of the control level for all interferents tested.

Substance	Amount	% Recovery
Conjugated Bilirubin	20 mg/dL	99.6
Unconjugated Bilirubin	20 mg/dL	100.0
Triglycerides	3000 mg/dL	101.6
Hemoglobin	500 mg/dL	104.3
Total Protein	12 g/dL	100.0

Expected Results

The analytical performance of the ACS:180® BR assay was evaluated using a panel of 103 samples from patients with clinically diagnosed breast cancer. All samples were analyzed using the ACS:180 BR assay and another commercially available method that also measures CA 27.29. A correlation of the two assays was performed by linear regression analysis. The correlation coefficient was 0.96 with a slope of 1.045 and an intercept of 7.6.

During the clinical trial to establish the performance characteristics of the ACS:180 BR assay, serum samples from 314 apparently healthy female blood donors were tested. The women were over the age of 18 years and approximately 50% were post-menopausal. The Upper Limit of Normal (ULN) for this group, defined as the 99th percentile of the observed results, was established at 38.6 U/mL. Additional data were generated on a panel of samples from patients with various diseases and conditions, as shown in the following table. These data indicate the percentage of samples with levels of CA 27.29 above the ULN.

Sample Category	N	% of Patients with levels of CA 27.29 > 38.6 U/mL (ULN)
Normals	314	1
Metastatic breast cancer	97	81
Benign breast disease	129	3
Malignant disease		
Stomach	29	7
Colon	43	26

Sample Category	N	% of Patients with levels of CA 27.29 > 38.6 U/mL (ULN)
Lung	47	43
Pancreas	45	47
Ovarian	50	56
Liver	20	60
Prostate	34	18
Uterus	30	13
Pregnancy	49	2
Lactating women	37	11
Cirrhosis	25	24
Endometriosis	24	8
Chronic Hepatitis	48	10
Ovarian Cyst	50	6
Renal Impairment	20	15

As with all *in vitro* diagnostic assays, each laboratory should determine its own reference range(s) for the diagnostic evaluation of patient results.[16]

Clinical Trial Results

Monitoring Stage II or Stage III Breast Cancer Patients for Disease Recurrence

This ACS:180 BR assay clinical trial was comprised of specimens from 162 patients who were enrolled in a multi-center prospective study. These patients were previously treated for Stage II or Stage III breast cancer and had no evidence of disease (NED) at the time of study entry (at least 1 year post-surgery). Patients were monitored over the length of the study (18 to 24 months) by determining the CA 27.29 levels in serial blood specimens drawn at each visit with their clinician. All patients included in the ACS:180 BR clinical study were lymph node positive at time of surgery, and had at least three serial bleeds after study enrollment. Specimen testing was performed in parallel using the ACS:180 BR assay and another commercially available method that measures CA 27.29.

Sensitivity, specificity, and predictive values (PPV and NPV) of the ACS:180 BR assay as an aid in monitoring for the recurrence of breast cancer were calculated against disease recurrence as defined by clinical outcome. Of the 162 patients included in the study, 25 showed clinical evidence of disease recurrence. Breast cancer recurrence was established using clinical symptoms, and/or general or specific imaging techniques; for example, x-ray, mammogram, magnetic resonance imaging, computerized tomography, ultrasound, bone scan, or liver scan. The utility of the ACS:180 BR assay as an aid for the detection of breast cancer recurrence was analyzed under two scenarios:

- Using any single ACS:180 BR result greater than the ULN (38.6 U/mL) prior to disease recurrence.
- Using two consecutive ACS:180 BR results greater than the ULN (38.6 U/mL) prior to disease recurrence.

Assay results above the ULN must have occurred prior to, or at the same time as, the clinical diagnosis of recurrence in order to be considered predictive of disease recurrence. Statistical analyses showed that the ACS:180 BR assay performance at the testing sites was not statistically different, so the combined performance data from all patients are shown in the following table:

Assay Concordance with Disease Recurrence

Performance Parameter	*Estimate* Using One Elevated Value*	*Estimate* Using Two Consecutive Elevated Values*
Sensitivity	60% (39–79)	48% (28–69)
Specificity	93% (87–96)	98% (94–100)
PPV	60% (39–79)	80% (52–96)
NPV	93% (87–96)	91% (85–95)

* Numbers in parentheses represent the 95% confidence intervals.

In this clinical trial, results from the commercially available comparator assay, using one elevated value, showed that sensitivity ranged from 58% to 62% at the two sites, specificity ranged from 53% to 97%, PPV ranged from 23% to 73%, and NPV ranged from 84% to 94%. Using two elevated values, the sensitivity ranged from 38% to 42%, specificity ranged from 86% to 100%, PPV ranged from 42% to 100%, and NPV ranged from 86% to 92%.

The positive and negative predictive values vary depending on the prevalence of disease recurrence. The following table contains the ACS:180 BR expected positive and negative predictive values for a range of realistic prevalences for the recurrence of disease. These expected values were based on the combined assay performance data presented in the preceeding table and the mean prevalence rate of disease recurrence of 15% at the two testing sites.

Expected Predictive Values at Various Prevalences of Disease Recurrence Using One or Two Consecutive Assay Values Greater Than the Upper Limit of Normal

	Using One Elevated Value		*Using Two Consecutive Elevated Values*	
Prevalence of Disease Recurrence	*PPV*	*NPV*	*PPV*	*NPV*
10%	49%	95%	73%	94%
15%	60%	93%	81%	91%
20%	68%	90%	86%	88%
25%	74%	87%	89%	85%
30%	79%	84%	91%	81%

Management of Patients with Metastatic Disease for Progression or Regression of Disease in Response to Therapy

This clinical trial was a multi-center prospective study of 97 breast cancer patients with metastatic disease. All patients received treatment during the study. Patients were enrolled at six sites and all ACS:180 BR testing was performed at three laboratories not associated with the patient enrollment sites.

The clinical sensitivity and specificity of the ACS:180 BR assay in relation to changing disease status in metastatic breast cancer patients were determined using a 20% increase in assay levels as an indication of progressing disease. In addition, the positive predictive value, the percentage of patients with increases above 20% who had clinically progressing disease was calculated. Calculations were based on the 79 patients who had assay levels above the ULN. Patients were considered to have completed the trial at the time of diagnosis of progressing or regressing disease. Patients with stable disease were followed anywhere from 2 to 7 months. The following tables summarize the study results:

Concordance of Changes in Clinical Status and Changes in CA 27.29 Antigen Level among 79 Patients

	Disease Status	
Change in Assay Levels	*Progression (number of patients)*	*Regression/Stable (number of patients)*
≥ 20% Increase	33	10
< 20% Increase	12	24

ACS:180 BR Assay Concordance with Clinical Diagnosis in Metastatic Breast Cancer Patients

	*Estimate**
Sensitivity to Change in Disease Status	73% (58–85%)
Specificity to Change in Disease Status	71% (53–85%)
Positive Predictive Value to Change in Disease Status	77% (61–88%)
Negative Predictive Value to Change in Disease Status	67% (49–81%)

* Values in parentheses represent the 95% confidence intervals.

The positive and negative predictive values (PPV and NPV) to change in disease status depend on the underlying prevalence of disease progression. The PPV and NPV values listed in the table above, were calculated using the prevalence of disease progression (57%) which was

observed in the clinical trial. The following table lists the positive and negative predictive values for other hypothetical prevalences of disease progression:

Prevalence of Disease Progession	PPV	NPV
25%	45.4%	88.8%
35%	57.3%	83.1%
45%	67.1%	76.4%
55%	75.3%	68.4%
65%	82.2%	58.8%
75%	88.2%	46.9%

Performance Characteristics

Specificity

There are no known cross-reactants for CA 27.29. The potential interference of chemotherapeutic agents, therapeutic drugs, and related tumor marker antigens was tested using the ACS:180 BR assay by adding these substances to five serum pools containing CA 27.29 ranging from 5.1 to 445.4 U/mL. The therapeutic drugs were spiked into patient serum pools and then diluted to a final concentration 10 times (or less depending on the solubility of the drug) the peak concentration normally found in serum immediately after infusion. The level of CA 27.29 in each of these pools was then determined and normalized to the level without the respective drugs or antigens.

Substance	Mean % Recovery	Substance	Mean % Recovery
Acetaminophen (10X)	96.3	Granisetron HCl (10X)	99.9
Cimetidine (40X)	100.9	Lorazepam (10X)	98.0
Ciprofloxacin (10X)	100.1	Megestrol acetate (5X)	105.2
Cyclophosphamide (1X)	96.2	Methotrexate (10X)	105.8
Codeine (10X)	96.9	Morphine (10X)	95.6
Dexamethasone (10X)	100.2	Ondansetron (10X)	93.3
Diphenhydramine HCl (10X)	101.8	Paclitaxel (2X)	101.7
Doxorubicin (10X)	95.9	Prochlorperazine (10X)	96.4
Etoposide (2X)	99.5	Tamoxifen (10X)	96.6
5-Fluorouracil (10X)	104.2	Vinorelbine tartrate (10X)	104.9

Antigen	Amount	Mean % Recovery
Carcinoembryonic antigen (CEA)	30 ng/mL	103.8
Ovarian Cancer antigen (CA 125)	300 U/mL	105.9
GI Cancer antigen (CA 19-9)	300 U/mL	103.6

Interference testing was determined according to CLSI Document EP7-A2.[17]

Analytical Sensitivity and Assay Range

The ADVIA Centaur BR assay measures CA 27.29 concentrations up to 450 U/mL with a minimum detectable concentration (analytical sensitivity) of 3.5 U/mL. Analytical sensitivity is defined as the concentration of CA 27.29 that corresponds to the RLUs that are two standard deviations less than the mean RLUs of replicate determinations of the BR zero standard. This response is an estimate of the minimum detectable concentration with 95% confidence.

Method Comparison

For 225 samples in the range of 6.54 to 448.94 U/mL, the relationship of the ADVIA Centaur BR assay to the ACS:180 BR assay is described by the following equation:

ADVIA Centaur BR = 1.00 (ACS:180 BR) - 0.94 U/mL

Correlation coefficient (r) = 0.99

Dilution Recovery

Ten human serum samples in the range of 326.04 to 416.17 U/mL of CA 27.29 were diluted 1:2, 1:4, 1:8, and 1:16 with Multi-Diluent 1 and assayed for recovery and parallelism. The recoveries ranged from 81.3% to 109.0% with a mean of 99.6%.

Sample	Dilution	Observed (U/mL)	Expected (U/mL)	Recovery %
1	—	416.17		
	1:2	212.26	208.09	102.0
	1:4	106.58	104.04	102.4
	1:8	51.63	52.02	99.3
	1:16	26.52	26.01	102.0
	Mean			101.4
2	—	386.62		
	1:2	183.88	193.31	95.1
	1:4	90.08	96.66	93.2
	1:8	44.37	48.33	91.8
	1:16	19.65	24.16	81.3
	Mean			90.4
3	—	326.04		
	1:2	164.81	163.02	101.1
	1:4	81.19	81.51	99.6
	1:8	40.56	40.76	99.5
	1:16	19.63	20.38	96.3
	Mean			99.1
4	—	398.40		
	1:2	204.16	199.20	102.5
	1:4	100.49	99.60	100.9
	1:8	49.28	49.80	99.0
	1:16	23.21	24.90	93.2
	Mean			98.9
5	—	368.97		
	1:2	195.18	184.48	105.8
	1:4	100.54	92.24	109.0
	1:8	49.96	46.12	108.3
	1:16	22.30	23.06	96.7
	Mean			105.0
6	—	369.10		
	1:2	193.61	184.55	104.9
	1:4	94.98	92.27	102.9
	1:8	48.61	46.14	105.4
	1:16	20.98	23.07	90.9
	Mean			101.0
7	—	359.79		
	1:2	187.44	179.90	104.2
	1:4	91.34	89.95	101.5
	1:8	44.11	44.97	98.1
	1:16	22.14	22.49	98.4
	Mean			100.6
8	—	383.10		
	1:2	198.88	191.55	103.8
	1:4	97.15	95.78	101.4
	1:8	49.91	47.89	104.2
	1:16	22.65	23.94	94.6
	Mean			101.0

Sample	Dilution	Observed (U/mL)	Expected (U/mL)	Recovery %
9	—	396.14		
	1:2	199.04	198.07	100.5
	1:4	96.94	99.03	97.9
	1:8	48.20	49.52	97.3
	1:16	24.19	24.76	97.7
	Mean			98.4
10	—	380.70		
	1:2	191.23	190.35	100.5
	1:4	97.82	95.17	102.8
	1:8	46.97	47.59	98.7
	1:16	23.74	23.79	99.8
	Mean			100.5
Mean				**99.6**

Spiking Recovery

Varying amounts of CA 27.29 were added to six serum samples with endogenous levels of CA 27.29 ranging from 11.89 to 31.36 U/mL and tested in the ACS:180 BR assay. The amount of CA 27.29 that was added varied from 29.94 to 460.29 U/mL. When compared to the expected value, the measured (recovered) values of CA 27.29 averaged 98.6% with a range of 87.5 to 128.9%.

Sample	Amount Added (U/mL)	Observed (U/mL)	Recovery %
1	—	11.89	
	29.94	40.54	95.7
	56.41	68.06	99.6
	90.91	99.29	96.1
	154.58	161.69	96.9
	299.85	314.37	100.9
	Mean		97.8
2	—	11.93	
	29.94	40.48	95.4
	56.41	66.11	96.0
	90.91	104.16	101.5
	154.58	165.44	99.3
	299.85	315.23	101.2
	Mean		98.7
3	—	22.06	
	29.94	52.35	101.2
	56.41	79.87	102.5
	90.91	113.71	100.8
	154.58	176.10	99.7
	299.85	333.37	103.8
	Mean		101.6
4	—	19.19	
	29.94	45.72	88.6
	56.41	91.92	128.9
	90.91	107.26	96.9
	154.58	170.11	97.6
	299.85	315.23	98.7
	Mean		102.2

Sample	Amount Added (U/mL)	Observed (U/mL)	Recovery %
5	—	31.36	
	29.94	58.33	90.1
	56.41	84.80	94.7
	90.91	120.12	97.6
	154.58	179.80	96.0
	299.85	328.84	99.2
	Mean		95.5
6	—	12.79	
	29.94	38.99	87.5
	56.41	69.03	99.7
	90.91	100.99	97.0
	154.58	162.03	96.5
	299.85	308.39	98.6
	460.29	458.07	96.7
	Mean		96.0
Mean			**98.6**

Precision (Reproducibility)

Four samples were assayed 6 times, in 12 runs, on 6 systems (n = 72 for each sample), over a period of 4 days. The following results were obtained:

Mean (U/mL)	Within-run % CV	Run-to-run % CV	Total % CV
30.5	5.2	5.5	7.6
88.2	1.9	2.1	2.8
136.7	1.7	1.5	2.3
350.3	1.4	3.8	4.1

Standardization

The ADVIA Centaur BR assay is traceable to an internal standard manufactured using highly purified CA 27.29. Assigned values for calibrators are traceable to this standardization.

Evaluating Results

The following is recommended when you observe poor reproducibility of CA 27.29 values at low levels or if you are not satisfied with assay performance:

- Ensure that the assay reagent and calibrator lot numbers and expiration dates match those entered in the system.
- Ensure that the calibrators, quality control materials, and assay reagents were prepared according to the recommended procedures.
- Ensure that the recommended sample collection and handling procedures were followed.
- Ensure that the recommended system cleaning procedures were followed.
- Ensure that Type II reagent water was used when operating the system.[9]
- Visually check the probe and tubing for obstructions, leaks, and deformities such as pinched or crimped tubing.
- Take further corrective action following established laboratory procedures.
- Calibrate the system using new assay reagents, calibrators, and quality control samples.
- Contact your local technical support provider or distributor for technical assistance.

Technical Assistance

For customer support, contact your local technical support provider or distributor.

www.siemens.com/diagnostics

References

1. Cancer Facts and Figures, American Cancer Society, 1997.
2. Breast Cancer Facts and Figures, American Cancer Society, 1995.
3. Smart CR, Byrne C, Smith RA, et al. Twenty year follow-up of the breast cancers diagnosed during the breast cancer detection demonstration project. CA, a Cancer Journal for Clinicians, 1997, 47:134-149.
4. Reddish MA, Helbrecht N, Almeida AF, et al. Epitope mapping of MAb B27.29 within the peptide core for the malignant breast varcinoma-associated mucin antigen coded for by the human MUC-1 gene. J Tumor Marker Oncol. 1992, 7:19-27.
5. Abbate I, Correale M, Musci MD, and Dragone D. Monoclonal antibody B27.29 against mucinous breast cancer associated antigen CA 27.29 in breast cancer. Br Cancer Res and Treatment 1991, 19(2):123.
6. Dnistrain AM, Schwartz MK, Greenberg EJ, Smith CA, Schwartz DC, Maimonis P. Evaluation of a breast cancer antigen assayed on the Ciba Corning ACS:180 Automated Chemiluminescence System. 1996, J Tumor Marker Oncol. 11(3):5-10.
7. Bon GG, von Mensdorff-Pouilly S, Kenemans P, van Kamp GJ, et al. Clinical and technical evaluation of ACS BR serum assay of MUC-1 gene-derived glycoprotein in breast cancer, and comparison with CA 15-3 assays. Clin Chem, 1997, 43(4):585-593.
8. Chan DW, Beveridge RA, Muss H, et al. Use of Truquant BR Radioimmunoassay for early detection of breast cancer recurrence in patients with Stage II and Stage III disease. J Clin Oncol 1997, 15(6):2322-2328.
9. Reagent Water Technical Bulletin. Siemens Healthcare Diagnostics, 107060.
10. Clinical and Laboratory Standards Institute (formerly NCCLS). *Procedures for the Handling and Processing of Blood Specimens; Approved Guideline - Third Edition.* Wayne, PA: Clinical and Laboratory Standards Institute; 2004. NCCLS Document H18-A3.
11. Centers for Disease Control. 1988. Update: Universal precautions for prevention of transmission of human immunodeficiency virus, hepatitis B virus and other bloodborne pathogens in healthcare settings. MMWR, 37:377–82, 387–8.
12. Clinical and Laboratory Standards Institute (formerly NCCLS). *Protection of Laboratory Workers From Occupationally Acquired Infections; Approved Guideline - Third Edition.* Wayne, PA: Clinical and Laboratory Standards Institute; 2005. NCCLS Document M29-A3.
13. Federal Occupational Safety and Health Administration, Bloodborne Pathogens Standard, 29 CFR 1910.1030.
14. Boscato LM, Stuart MC. Heterophilic antibodies: a problem for all immunoassays. Clin Chem 1988;34:27–33.
15. Bombardieri E, Pizzichetta M, Veronesi P, et al. CA 15-3 determination in patients with breast cancer: clinical utility for the detection of distant metastases. Eur J Cancer 1993;29A(1):144–6.
16. Clinical and Laboratory Standards Institute (formerly NCCLS). *How to Define and Determine Reference Intervals in the Clinical Laboratory; Approved Guideline - Second Edition.* Wayne, PA: Clinical and Laboratory Standards Institute; 2000. NCCLS Document C28-A2.
17. Clinical and Laboratory Standards Institute (formerly NCCLS). *Interference Testing in Clinical Chemistry; Approved Guideline - Second Edition.* Wayne, PA: Clinical and Laboratory Standards Institute; 2005. NCCLS document EP7-A2.

ADVIA Centaur, ReadyPack, and ACS:180 are trademarks of Siemens Healthcare Diagnostics.

© 2008 Siemens Healthcare Diagnostics Inc. All rights reserved.

US Pats 5,110,932; 5,609,822; 5,788,928

Origin: US

Siemens Healthcare Diagnostics Inc.
Tarrytown, NY 10591-5097 USA

EC REP Siemens Healthcare Diagnostics Ltd.
Sir William Siemens Sq.
Frimley, Camberley, UK GU16 8QD

Siemens Healthcare
Diagnostics Pty Ltd
885 Mountain Highway
Bayswater Victoria 3153
Australia

シーメンスヘルスケア・
ダイアグノスティクス株式会社
東京都品川区東五反田 3－20－14
Siemens Healthcare Diagnostics
輸入

CA 125II

CE

Assay Summary

Sample Type	**Serum**
Sample Volume	**50 µL**
Calibrator	**CA 125II**
Sensitivity and Assay Range	**2–600 U/mL**

Contents

REF	Contents	Number of Tests
01678114 (128533)	5 ReadyPack® primary reagent packs containing ADVIA Centaur® CA 125II Lite Reagent and Solid Phase ADVIA Centaur CA 125II Master Curve card	500
or		
09427226 (128532)	1 ReadyPack primary reagent pack containing ADVIA Centaur CA 125II Lite Reagent and Solid Phase ADVIA Centaur CA 125II Master Curve card	100

For a definition of symbols used in product labeling, refer to *Understanding the Symbols* in Appendix D.

Intended Use

For *in vitro* diagnostic use in the quantitative, serial determination of CA 125 in human serum and to aid in the management of patients with ovarian carcinoma using the ADVIA Centaur® and ADVIA Centaur XP systems. The test is intended for use as an aid in monitoring patients previously treated for ovarian cancer. Serial testing for CA 125 in the serum of patients who are clinically free of disease should be used in conjunction with other clinical methods used for the early detection of cancer recurrence. The test is also intended for use as an aid in the management of ovarian cancer patients with metastatic disease by monitoring the progression or regression of disease in response to treatment. It is recommended that the ADVIA Centaur CA 125 II assay be used under the order of a physician trained and experienced in the management of gynecological cancers. This assay is not intended for screening or diagnosis of ovarian cancer or for use on any other system.

WARNING: The concentration of CA 125 in a given specimen, as determined by assays from different manufacturers, can vary due to differences in assay methods and reagent specificity. The results reported by the laboratory to the physician must include the identity of the assay for CA 125 used. Values obtained with different assay methods cannot be used interchangeably. If, in the course of monitoring a patient, the assay method used for determining serial levels of CA 125 is changed, the laboratory must perform additional testing to confirm baseline values. The ADVIA Centaur CA 125 II assay is based on the OC 125 and M11 antibodies available through agreement with Fujirebio Diagnostics, Inc. Assays using antibodies other than OC 125 and M11 may give different results.

Materials Required But Not Provided

REF	Description	Contents
02462395 (128537)	CA 125II Calibrator	6 vials of low calibrator CAL L 6 vials of high calibrator CAL H
or		
09750760 (128536)	CA 125II Calibrator	2 vials of low calibrator CAL L 2 vials of high calibrator CAL H

Optional Reagents

REF	Description	Contents
07907174 (110313)	ADVIA Centaur Multi-Diluent 1 [M-DIL 1]	6 ReadyPack ancillary reagent packs containing 25 mL/pack
or		
07293184 (110312)	ADVIA Centaur Multi-Diluent 1 [M-DIL 1]	2 ReadyPack ancillary reagent packs containing 25 mL/pack
09348792 (672177)	Multi-Diluent 1 [M-DIL 1]	50 mL/vial
128530	CA 125II Master Curve Material	8 x 1 mL

Summary and Explanation of the Test

CA 125 is identified as a 200 to 1000 kDa mucin-like glycoprotein.[1,2] CA 125 is a surface antigen associated with nonmucinous epithelial ovarian cancer.[1-3] The protein is sloughed or secreted from the surface of the ovarian cancer cells into the serum or ascites.[4] The antigen reacts to a murine monoclonal antibody, OC 125, that was originally developed by immunizing mice with cells from ovarian cancer cell line OVCA 433.[3,4] Second-generation assays for CA 125 utilize both the OC 125 and M11 epitopes yielding an improved assay range.[5-7]

CA 125 is a useful tumor marker for evaluating therapy and monitoring disease status in patients under treatment for ovarian cancer. Post-operatively, the level of CA 125 correlates with tumor bulk and is a prognostic indicator of clinical outcome.[2,8-11] It has been reported that patients with levels exceeding 35 U/mL have the highest risk for clinical recurrence.[9,12]

It has been reported in the literature that prior to a second-look laparotomy, a patient with levels of CA 125 greater than 35 U/mL is very likely to have tumor present at the surgery or to have a future recurrence.[12] However, a level of CA 125 less than 35 U/mL prior to a second-look operation is not definitive evidence that the patient is free from residual tumor.[11,13] Levels of CA 125 measured after a second-look operation provide strong indications of clinical outcome.[9]

Measured serially, the levels of CA 125 correspond with disease progression or regression.[9] The rate of change in CA 125 is also highly prognostic. A rapid decrease in the level of CA 125 indicates a positive response to treatment.[3,9,10] Elevated levels of CA 125 after the third course of primary chemotherapy are predictive of poor outcome.[14]

As a diagnostic tool, the level of CA 125 alone is not sufficient to determine the presence or extent of disease. Preoperative levels of CA 125 in patients with malignant pelvic masses provide no information regarding the histologic grade or diameter of the tumor mass.[3,10] In postmenopausal women, however, the level of CA 125 in combination with ultrasonography may distinguish benign from malignant pelvic masses.[15,16]

Patients with certain benign conditions, such as hepatic cirrhosis, acute pancreatitis, endometriosis, pelvic inflammatory disease, menstruation, and first trimester pregnancy, have shown elevated levels of CA 125.[1,14,17,18] Elevated levels are found in 1 to 2% of healthy donors.[1,9]

Assay Principle

The ADVIA Centaur CA 125 II assay is a two-site sandwich immunoassay using direct chemiluminometric technology, which uses two monoclonal mouse antibodies specific for CA 125. The first antibody is directed toward the M11 antigenic domain, and is labeled with acridinium ester. The second antibody is directed toward the OC 125 antigenic domain and is labeled with fluorescein. The immunocomplex formed with CA 125 is captured with monoclonal mouse anti-fluorescein antibody coupled to paramagnetic particles in the Solid Phase.

The system automatically performs the following steps:

- dispenses 50 µL of sample into a cuvette
- dispenses 100 µL of Lite Reagent and incubates for 7.5 minutes at 37°C
- dispenses 250 µL of Solid Phase and incubates for 20 minutes at 37°C
- separates, aspirates, and washes the cuvettes with reagent water[19]
- dispenses 300 µL each of Acid Reagent and Base Reagent to initiate the chemiluminescent reaction
- reports results according to the selected option, as described in the system operating instructions or in the online help system

A direct relationship exists between the amount of CA 125 present in the patient sample and the amount of relative light units (RLUs) detected by the system.

Specimen Collection and Handling

Serum is the recommended sample type for this assay.

Plasma samples should not be used because their performance in this assay has not been determined.

The following recommendations for handling and storing blood samples are furnished by the National Committee for Clinical Laboratory Standards:[20]

- Collect all blood samples observing universal precautions for venipuncture.
- Allow samples to clot adequately before centrifugation.
- Keep tubes stoppered and upright at all times.
- Do not use samples that have been stored at room temperature for longer than 8 hours.
- Tightly cap and refrigerate specimens at 2 to 8°C if the assay is not completed within 8 hours.
- Freeze samples at or below -20°C if the sample is not assayed within 24 hours. Mix thoroughly after thawing.

Before placing samples on the system ensure that:

- Samples are free of fibrin or other particulate matter. Remove particulates by centrifugation at 1000 x g for 15 to 20 minutes.
- Samples are free of bubbles.

Reagents

Store the reagents upright at 2–8°C.
Mix all primary reagent packs by hand before loading them onto the system. Visually inspect the bottom of the reagent pack to ensure that all particles are dispersed and resuspended. For detailed information about preparing the reagents for use, refer to Appendix C, *Handling Reagents*.

Reagent Pack	Reagent	Volume	Ingredients	Storage	Stability
ADVIA Centaur CA 125II ReadyPack primary reagent pack	Lite Reagent	10.0 mL/ reagent pack	monoclonal mouse anti-M11 antibody (~0.15 µg/mL) labeled with acridinium ester and monoclonal mouse anti-OC 125 (~1.0 µg/mL) labeled with fluorescein in phosphate buffer with bovine serum albumin and preservatives	2–8°C	until the expiration date on the pack label. For onboard stability, refer to *Onboard Stability and Calibration Interval.*
	Solid Phase	25.0 mL/ reagent pack	monoclonal mouse anti-fluorescein antibody (~30 µg/mL) coupled to paramagnetic particles in phosphate buffer with bovine serum albumin and preservatives	2–8°C	until the expiration date on the pack label. For onboard stability, refer to *Onboard Stability and Calibration Interval.*
ADVIA Centaur M-DIL 1 ReadyPack ancillary reagent pack	Multi-Diluent 1	25.0 mL/ reagent pack	equine serum with sodium azide (0.1%) and preservatives	2–8°C	until the expiration date on the pack label or 28 consecutive days after accessing the ancillary reagent pack

NOTE: Sodium azide can react with copper and lead plumbing to form explosive metal azides. On disposal, flush reagents with a large volume of water to prevent the buildup of azides, if disposal into a drain is in compliance with federal, state, and local requirements.

CAUTION: This device contains material of animal origin and should be handled as a potential carrier and transmitter of disease.

For *in vitro* diagnostic use.

Loading Reagents

Ensure that the system has sufficient primary and ancillary reagent packs. For detailed information about preparing the system, refer to the system operating instructions or to the online help system.

Mix all primary reagent packs by hand before loading them onto the system. Visually inspect the bottom of the reagent pack to ensure that all particles are dispersed and resuspended. For detailed information about preparing the reagents for use, refer to Appendix C, *Handling Reagents*.

Load the ReadyPack reagent packs in the primary reagent area using the arrows as a placement guide. The system automatically mixes the primary reagent packs to maintain homogeneous suspension of the reagents. For detailed information about loading reagents, refer to the system operating instructions or to the online help system.

If automatic dilution of a sample is required, load ADVIA Centaur Multi-Diluent 1 in the ancillary reagent entry.

Onboard Stability and Calibration Interval

Onboard Stability	Calibration Interval
28 days	28 days

Additionally, the ADVIA Centaur CA 125 II assay requires a two-point calibration:

- when changing lot numbers of primary reagent packs
- when replacing system components
- when quality control results are repeatedly out of range

CAUTION:

- Discard the primary reagent packs at the end of the onboard stability interval.
- Do not use reagents beyond the expiration date.

Master Curve Calibration

The ADVIA Centaur CA 125 II assay requires a Master Curve calibration when using a new lot number of Lite Reagent and Solid Phase. For each new lot number of Lite Reagent and Solid Phase, use the barcode reader or keyboard to enter the Master Curve values on the system. The Master Curve card contains the Master Curve values. For detailed information about entering calibration values, refer to the system operating instructions or to the online help system.

Quality Control

For detailed information about entering quality control values, refer to the system operating instructions or to the online help system.

To monitor system performance and chart trends, as a minimum requirement, two levels of quality control material should be assayed on each day that samples are analyzed. Quality control samples should also be assayed when performing a two-point calibration. Treat all quality control samples the same as patient samples.

Siemens Healthcare Diagnostics recommends the use of commercially available quality control materials with at least 2 levels (low and high). A satisfactory level of performance is achieved when the analyte values obtained are within the Acceptable Control Range for the system or within your range, as determined by an appropriate internal laboratory quality control scheme.

If the quality control results do not fall within the Expected Values or within the laboratory's established values, do not report results. Take the following actions:

- Verify that the materials are not expired.
- Verify that required maintenance was performed.
- Verify that the assay was performed according to the instructions for use.
- Rerun the assay with fresh quality control samples.
- If necessary, contact your local technical support provider or distributor for assistance.

Sample Volume

This assay requires 50 µL of sample for a single determination. This volume does not include the unusable volume in the sample container or the additional volume required when performing duplicates or other tests on the same sample. For detailed information about determining the minimum required volume, refer to *Sample Volume Requirements* in the *ADVIA Centaur Reference Manual.*

Assay Procedure

For detailed procedural information, refer to the system operating instructions or to the online help system.

Procedural Notes

Calculations

For detailed information about how the system calculates results, refer to the system operating instructions or to the online help system.

The system reports serum CA 125 results in U/mL.

Dilutions

- Serum samples with CA125 levels greater than 600 U/mL must be diluted and retested to obtain accurate results.
- Patient samples can be automatically diluted by the system or prepared manually.
- For automatic dilutions, ensure that ADVIA Centaur Multi-Diluent 1 is loaded and set the system parameters as follows:

  Dilution point: ≤ 600 U/mL

  Dilution factor: 10, 20

  For detailed information about automatic dilutions, refer to the system operating instructions or to the online help system.
- Manually dilute the patient samples when patient results exceed the linearity of the assay using automatic dilution, or when laboratory protocol requires manual dilution.
- Use Multi-Diluent 1 to manually dilute patient samples, and then load the diluted sample in the sample rack, replacing the undiluted sample.
- Ensure that results are mathematically corrected for dilution. If a dilution factor is entered when scheduling the test, the system automatically calculates the result.

High Dose Hook Effect

Patient samples with high CA 125 levels can cause a paradoxical decrease in the RLUs (high dose hook effect). In this assay, CA 125 levels as high as 70,000 U/mL will assay greater than 600 U/mL.

Disposal

Dispose of hazardous and biologically contaminated materials according to the practices of your institution. Discard all materials in a safe and acceptable manner and in compliance with all federal, state, and local requirements.

Limitations

NOTE: Do not interpret levels of CA 125 as absolute evidence of the presence or the absence of malignant disease. Before treatment, patients with confirmed ovarian carcinoma frequently have levels of CA 125 within the range observed in healthy individuals. Elevated levels of CA 125 can be observed in patients with nonmalignant diseases. Measurements of CA 125 should always be used in conjunction with other diagnostic procedures, including information from the patient's clinical evaluation.

The concentration of CA 125 in a given specimen determined with assays from different manufacturers can vary due to differences in assay methods, calibration, and reagent specificity. CA 125 determined with different manufacturers' assays will vary depending on the method of standardization and antibody specificity.

CA 125 II assay testing is not recommended as a screening procedure to diagnose cancer in the general population.

Heterophilic antibodies in human serum can react with reagent immunoglobulins, interfering with *in vitro* immunoassays.[21] Patients routinely exposed to animals or to animal serum products can be prone to this interference and anomalous values may be observed. Additional information may be required for diagnosis.

Evidence suggests that patients undergoing retinal fluorescein angiography can retain amounts of fluorescein in the body for up to 36 to 48 hours post-treatment. In the cases of patients with renal insufficiency, including many diabetics, retention could be much longer. Such samples can produce either falsely elevated or falsely depressed values when tested with this assay, and should not be tested.[22]

The concentration of CA 125 in a given specimen determined with assays from different manufacturers can vary because of differences in assay methods, calibration, and reagent specificity. CA 125 determined with different manufacturers' assays will vary depending on the method of standardization and antibody specificity. Therefore, it is important to use assay-specific values to evaluate quality control results.

Endogenous interferents, such as high concentrations of hemoglobin, lipids, bilirubin and total protein, had no effect beyond the limits of random within-run variations. Mean recoveries were within 8% of the control level for all interferents tested.

Substance	Amount	% Recovery
Conjugated Bilirubin	20 mg/dL	93
Unconjugated Bilirubin	20 mg/dL	102
Triglycerides	900 mg/dL	94
Hemoglobin	1000 mg/dL	99
Albumin	6.5 g/dL	98
Cholesterol	500 mg/dL	108

Expected Results

ADVIA Centaur CA 125 II assay results were obtained on 239 apparently healthy women. In this study, 1% of the women had CA 125 levels greater than 35 U/mL. The median age of the women was 48 years of age (range: 17 to 79 years). The Upper Limit of Normal (ULN) for this group, defined as the 97.5th percentile of the observed results, was established at 30.2 U/mL.

Additional data was generated on patient samples, as shown in the following table:

Sample Category	N	% of Patients with levels of CA 125 > 35 U/mL
Normals		
Premenopausal women	100	2
Postmenopausal women	99	0
Pregnancy	15	13.3
Benign disease		
Cervical displasia	20	20
Endometriosis	10	10
Uterine fibroids	10	20
Ovarian cysts	10	0
Pelvic inflammatory disease	10	0
Polycystic ovaries	10	40
Malignant disease		
Active Ovarian	116	79.3
Breast	34	32
Lymphoma	10	0
Colorectal	10	50
Lung	10	10
Prostate	10	0

As with all *in vitro* diagnostic assays, each laboratory should determine its own reference range(s) for the diagnostic evaluation of patient results.[23]

Monitoring Disease and Therapy

A retrospective clinical study was conducted to evaluate ADVIA Centaur CA 125 II values in 44 ovarian cancer patients during the course of disease and therapy. The study group included patients who responded to therapy, experienced disease progression, exhibited stable persistent disease, and demonstrated no evidence of disease (NED). A 30% or greater increase in CA 125 II value, with a final value greater than 35 U/mL, was considered an indication of disease progression. A 30% or greater decrease was considered an indication of response. The table below summarizes the results of the clinical study.

ADVIA Centaur Longitudinal Patient Evaluation Results Ovarian Cancer Patients Only

Correspondence (Parallels Clinical Course)	N	Percentage
Increasing CA 125 II with progression	23	52
Decreasing CA 125 II with response	6	14
Stable disease or no evidence of disease with no change in CA 125II values	5	11
Total paralleling clinical course	34	77
No correspondence (total) (Does not parallel clinical course)	10	23

The following table shows the correspondence of ADVIA Centaur CA 125 II changes to changes in the clinical status of the patient. The sensitivity of longitudinal measurements using the ADVIA Centaur CA 125 II method was 93.5%.

Monitoring Ovarian Cancer Patients

Clinical Status	ADVIA Centaur CA 125 II Change	No Change	Total
Change	29	8	37
No Change	2	5	7
Total	31	13	44

		95% CI
Sensitivity	93.5%	78.6% to 99.2%
Specificity	38.5%	13.9% to 68.4%

A representative profile of a monitored ovarian cancer patient is shown in the figure below. Results for both the ADVIA Centaur CA 125 II assay and Immuno 1 CA 125 II assay are shown.

Ovarian Cancer Patient

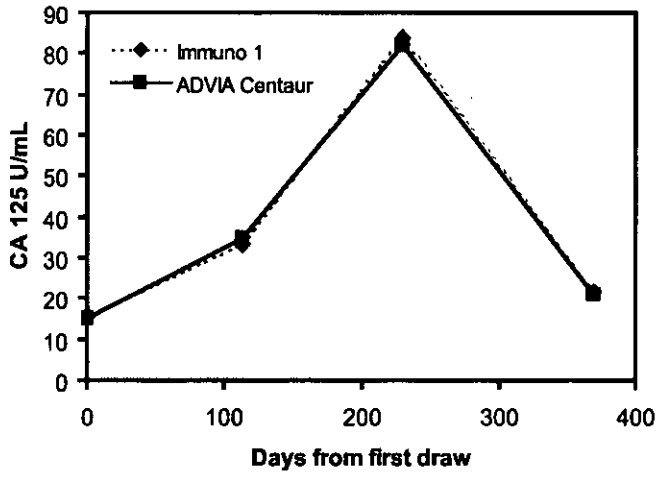

Performance Characteristics

Specificity

There are no known cross-reactants for CA 125.

The potential interference of chemotherapeutic agents, therapeutic drugs, and tumor marker antigens was tested by adding these substances to serum pools containing 35 U/mL CA 125. The level of CA 125 in each of these pools was then determined and percent recovery relative to the pool without the potential interference was calculated.

Substance	Amount Added (µg/mL)	Mean % Recovery (Spike/control x 100)
5-Fluorouracil	1	101
Cis-Platinum	175	95
Cyclophosphamide (Cytoxan)	800	97
Diethylstilbesterol	25	100
Doxorubicin (Adriamycin)	50	104
Etoposide	10	102

98

Substance	Amount Added (µg/mL)	Mean % Recovery (Spike/control x 100)
Flutamide	10	99
Megesterol acetate	10	99
Mitomycin	75	101
Methotrexate	450	97
Tamoxifen	60	101
Vincristine	1.5	99

Interference testing was determined according to CLSI Document EP7-A2.[24]

Analytical Sensitivity and Assay Range

The ADVIA Centaur CA 125 II assay measures concentrations of CA 125 up to 600 U/mL with a minimum detectable concentration (analytical sensitivity) of 2 U/mL. Analytical sensitivity is defined as the concentration of CA 125 that corresponds to the RLUs that are two standard deviations greater than the mean RLUs of replicate determinations of the CA 125 II zero standard. This response is an estimate of the minimal detectable concentration with 95% confidence.

Method Comparison

For 227 samples in the range of 2.3 to 452.9 U/mL, the relationship of the ADVIA Centaur CA 125 II assay to the Bayer Immuno 1® CA 125 II assay is described by the following equation:

ADVIA Centaur CA 125 II = 1.025 (Bayer Immuno 1) + 1.14 U/mL

Correlation coefficient (r) = 0.992

Dilution Recovery

A total of 6 samples with concentrations of CA 125 in the range of 472.6 to 795.8 U/mL were diluted 1:2, 1:4, 1:8, and 1:16 with Multi-Diluent 1 and assayed for recovery and parallelism. The recoveries ranged from 85.3 to 112.5% with a mean of 98.5%.

Sample	Dilution	Observed (U/mL)	Expected (U/mL)	Recovery %
1	—	640.2		
	1:2	340.1	320.1	106.2
	1:4	160.7	160.0	100.4
	1:8	80.1	80.0	100.1
	1:16	40.0	40.0	99.9
	Mean			101.7
2	—	795.8		
	1:2	425.7	397.9	107.0
	1:4	216.5	199.0	108.8
	1:8	109.5	99.5	110.0
	1:16	56.0	49.7	112.5
	Mean			109.6
3	—	511.1		
	1:2	238.8	255.6	93.4
	1:4	118.0	127.8	92.3
	1:8	59.6	63.9	93.4
	1:16	30.6	31.9	95.7
	Mean			93.7

Sample	Dilution	Observed (U/mL)	Expected (U/mL)	Recovery %
4	—	612.1		
	1:2	314.4	306.1	102.7
	1:4	148.0	153.0	96.7
	1:8	70.6	76.5	92.2
	1:16	36.8	38.3	96.2
	Mean			97.0
5	—	472.6		
	1:2	227.8	236.3	96.4
	1:4	121.6	118.1	102.9
	1:8	59.3	59.1	100.4
	1:16	30.7	29.5	103.9
	Mean			100.9
6	—	497.8		
	1:2	219.2	248.9	88.1
	1:4	110.4	124.5	88.7
	1:8	56.2	62.2	90.4
	1:16	26.5	31.1	85.3
	Mean			88.1
Mean				**98.5**

Spiking Recovery

Various amounts of CA 125 were added to 6 serum samples with endogenous CA 125 levels ranging from 6.6 to 20.6 U/mL. The recoveries ranged from 84.9 to 104.4% with a mean of 95.0%.

Sample	Amount Added (U/mL)	Observed (U/mL)	Recovery %
1	—	20.6	
	492	473.3	96.1
	270	235.1	87.2
	135	126.8	93.8
	67	62.2	92.6
	37	31.1	84.9
	Mean		90.9
2	—	6.6	
	492	504.5	102.5
	270	263.8	97.9
	135	140.6	104.1
	67	70.0	104.4
	37	35.6	97.3
	Mean		101.2
3	—	10.8	
	492	471.2	95.7
	270	259.8	96.4
	135	132.5	98.0
	67	66.5	99.1
	37	34.6	94.5
	Mean		96.7

Sample	Amount Added (U/mL)	Observed (U/mL)	Recovery %
4	—	14.0	
	492	430.5	87.4
	270	233.0	86.5
	135	123.4	91.3
	67	61.3	91.3
	37	30.6	83.7
	Mean		88.0
5	—	9.1	
	492	463.5	94.1
	270	250.4	92.9
	135	131.5	97.2
	67	65.3	97.4
	37	34.0	93.0
	Mean		94.9
6	—	9.3	
	492	470.4	95.6
	270	266.1	98.7
	135	132.7	98.2
	67	69.4	103.5
	37	34.8	95.1
	Mean		98.2
Mean			**95.0**

Precision

A total of 5 samples were assayed 4 times with 2 lots of reagents on 2 systems in each of 10 days (n = 160 for each sample). The following table contains a summary of the results that were obtained:

Mean (U/mL)	Within-run % CV	Run-to-run % CV	Total % CV
32.9	3.8	2.4	4.5
158.0	3.7	1.9	4.3
37.9	3.9	1.2	4.6
134.8	3.7	2.2	4.5
438.5	4.3	2.5	5.2

Standardization

The ADVIA Centaur CA 125 II assay is traceable to an internal standard manufactured using highly purified material. Assigned values for calibrators are traceable to this standardization. Currently there is no reference standard for this assay.

Evaluating Results

The following is recommended if you are not satisfied with assay performance:

- Ensure that the assay reagent and calibrator lot numbers and expiration dates match those entered in the system.
- Ensure that the calibrators, quality control materials, and assay reagents were prepared according to the recommended procedures.
- Ensure that the recommended sample collection and handling procedures were followed.
- Ensure that the recommended system cleaning procedures were followed.

101

- Ensure that Type II reagent water was used when operating the system.[19]
- Visually check the probe and tubing for obstructions, leaks, and deformities such as pinched or crimped tubing.
- Take further corrective action following established laboratory procedures.
- Calibrate the system using new assay reagents, calibrators, and quality control samples.
- If necessary, contact your local technical support provider or distributor for assistance.

Technical Assistance

For customer support, please contact your local technical support provider or distributor.

www.siemens.com/diagnostics

References

1. Mackey SE, Creasman WT. Ovarian cancer screening. J Clin Oncol 1995;13(3):783–93.
2. Schwartz MK. Cancer markers. In: DeVita VT, Hellman S, Rosenberg SA, editors. Cancer: principles and practice of oncology. Philadelphia: JB Lippincott Company, 1993. p.534.
3. Lavin PT, Knapp RC, Malkasian G, et al. CA 125 for the monitoring of ovarian carcinoma during primary therapy. Obstet Gynecol 1987;69(2):223–7.
4. O'Brien TJ, Hardin JW, Bannon GA, et al. CA 125 antigen in human amniotic fluid and fetal membranes. Am J Obstet Gynecol 1986;155(1):50–5.
5. Kenemans P, Verstraeten AA, et al. The second generation CA 125 assays. Ann Med 1995;27:107–13.
6. Bonfrer JMG, Baan AW, et al. Technical evaluation of three second generation CA 125 assays. Eur J Clin Chem Clin Biochem 1994;32:201–7.
7. Kenemans P, van Kamp GJ, et al. Heterologous double-determinant immunoradiometric assay CA 125 II: reliable second-generation immunoassay for determining CA 125 in serum. Clin Chem 1993;39:2509–13.
8. Parker D, Bradley C, Bogle SM, et al. Serum albumin and CA 125 are powerful predictors of survival in epithelial cancer. Br J Obstet Gynaecol 1994;101:888–93.
9. Niloff JM, Knapp RC, Lavin PT, et al. The CA 125 assay as a predictor of clinical recurrence in epithelial ovarian cancer. Am J Obstet Gynecol 1986;155(1):56–60.
10. Sevelda P, Schemper M, Spona J. CA 125 as an independent prognostic factor for survival in patients with epithelial ovarian cancer. Am J Obstet Gynecol 1989;161(5):1213–6.
11. Berek JS, Knapp RC, Malkasian GD, et al. CA 125 serum levels correlated with second-look operations among ovarian cancer patients. Obstet Gynecol 1986;67(5):685–9.
12. Niloff JM, Bast RC, Schaetzl EM, et al. Predictive value of CA 125 antigen levels in second-look procedures for ovarian cancer. Am J Obstet Gynecol 1985;151(7):981–6.
13. Helzlsouer KJ, Bush TL, Alberg AJ, et al. Prospective study of serum CA 125 levels as markers of ovarian cancer. JAMA 1993;269(9):1123–6.
14. Mogensen, O. Prognostic value of CA 125 in advanced ovarian cancer. Gynecol Oncol 1992;44:207–12.
15. Malkasisan GD, Knapp RC, Lavin PT, et al. Preoperative evaluation of serum CA 125 levels in premenopausal and postmenopausal patients with pelvic masses: discrimination of benign from malignant disease. Am J Obstet Gynecol 1988;159(2):341–6.
16. Chou C-Y, Chang CH, Yao B-L, et al. Color doppler ultrasonograph and serum CA 125 in the differentiation of benign and malignant ovarian tumors. J Clin Ultrasound 1994;22:491–6.
17. Cannistra SA. Cancer of the ovary. N Engl J Med 1993;329(21):1550–9.
18. Bast RC, Klug TL, St. John E, et al. A radioimmunoassay using a monoclonal antibody to monitor the course of epithelial ovarian cancer. N Engl J Med 1983;309(15):883–7.
19. Reagent Water Technical Bulletin. Siemens Healthcare Diagnostics, 107060.
20. Clinical and Laboratory Standards Institute (formerly NCCLS). *Procedures for the Handling and Processing of Blood Specimens; Approved Guideline - Third Edition.* Wayne, PA: Clinical and Laboratory Standards Institute; 2004. NCCLS Document H18-A3.
21. Boscato LM, Stuart MC. Heterophilic antibodies: a problem for all immunoassays. Clin Chem 1988;34:27–33.
22. Inloes R, Clark, D and Drobnies A: Interference of fluorescein, used in retinal angiography with certain clinical laboratory tests. Clin Chem 1987, 33:2126-2127.

23. Clinical and Laboratory Standards Institute (formerly NCCLS). *How to Define and Determine Reference Intervals in the Clinical Laboratory; Approved Guideline - Second Edition.* Wayne, PA: Clinical and Laboratory Standards Institute; 2000. NCCLS Document C28-A2.
24. Clinical and Laboratory Standards Institute (formerly NCCLS). *Interference Testing in Clinical Chemistry; Approved Guideline - Second Edition.* Wayne, PA: Clinical and Laboratory Standards Institute; 2005. CLSI document EP7-A2.

ADVIA Centaur and ReadyPack are trademarks of Siemens Healthcare Diagnostics.

Bayer Immuno 1 is a trademark of Siemens Healthcare Diagnostics.

CA 125II is a trademark of Fujirebio Diagnostics, Inc.

© 2008 Siemens Healthcare Diagnostics Inc. All rights reserved.

US Pats 5,110,932; 5,655,426; 5,609,822; 5,788,928

Origin: US

Siemens Healthcare Diagnostics Inc.
Tarrytown, NY 10591-5097 USA

EC REP Siemens Healthcare Diagnostics Ltd.
Sir William Siemens Sq.
Frimley, Camberley, UK GU16 8QD

Siemens Healthcare
Diagnostics Pty Ltd
885 Mountain Highway
Bayswater Victoria 3153
Australia

シーメンスヘルスケア・
ダイアグノスティクス株式会社
東京都品川区東五反田 3－20－14
Siemens Healthcare Diagnostics

CA 15-3®

CE

Assay Summary

Sample Type	**Serum**
Sample Volume	**20 µL**
Calibrator	**CA 15-3**
Sensitivity and Assay Range	**0.50 – 200 U/mL**

Contents

REF	Contents	Number of Tests
00128609 (128535)	5 ReadyPack® primary reagent packs containing ADVIA Centaur® CA 15-3® Lite Reagent, Solid Phase, and Conjugate Reagent ADVIA Centaur CA 15-3 Master Curve card	500
or		
08126338 (128534)	1 ReadyPack primary reagent pack containing ADVIA Centaur CA 15-3 Lite Reagent, Solid Phase, and Conjugate Reagent ADVIA Centaur CA 15-3 Master Curve card	100

For a definition of symbols used in product labeling, please refer to *Understanding the Symbols* in Appendix D.

Intended Use

The ADVIA Centaur CA 15-3 assay is an *in vitro* diagnostic test for the quantitative serial determination of cancer antigen CA 15-3 in human serum using the ADVIA Centaur and ADVIA Centaur XP systems. When used in conjunction with other clinical and diagnostic procedures, serial testing with the ADVIA Centaur CA 15-3 assay is useful for monitoring the course of disease and therapy in metastatic breast cancer patients, and for detection of recurrence in previously treated Stage II, with greater than two positive lymph nodes, or Stage III breast cancer patients. This assay is not intended for use on any other system.

WARNING: The concentration of CA 15-3 in a given specimen, as determined by assays from different manufacturers, can vary because of differences in assay methods and reagent specificity. The results reported by the laboratory to the physician must include the identity of the assay for CA 15-3 used. Values obtained with different assay methods cannot be used interchangeably. If, in the course of monitoring a patient, the assay method used for determining serial levels of CA 15-3 is changed, the laboratory must perform additional serial testing to confirm baseline values. The ADVIA Centaur CA 15-3 assay is based on the DF3 and 115D8 antibodies available through agreement with Fujirebio Diagnostics®, Inc.

United States federal law restricts this device to sale and distribution by or on the order of a physician, or to a clinical laboratory, and use is restricted to, by, or on the order of a physician.

Materials Required But Not Provided

REF	Description	Contents
03698546 (128539)	CA 15-3 Calibrator	6 vials of low calibrator CAL L 6 vials of high calibrator CAL H
or		
09311368 (128538)	CA 15-3 Calibrator	2 vials of low calibrator CAL L 2 vials of high calibrator CAL H

104

REF	Description	Contents
01137100 (112351)	ADVIA Centaur Wash 1 [WASH 1]	2 x 1500 mL/pack
or		
03773025	ADVIA Centaur Wash 1 [WASH 1] * *for use with systems with 2500 mL capacity	2 x 2500 mL/pack

Optional Reagents

REF	Description	Contents
07907174 (110313)	ADVIA Centaur Multi-Diluent 1 [M-DIL 1]	6 ReadyPack ancillary reagent packs containing 25 mL/pack
or		
07293184 (110312)	ADVIA Centaur Multi-Diluent 1 [M-DIL 1]	2 ReadyPack ancillary reagent packs containing 25 mL/pack
09348792 (672177)	Multi-Diluent 1 [M-DIL 1]	50 mL/vial
128531	CA 15-3 Master Curve Material	7 x 1 mL

Summary and Explanation of the Test

CA 15-3 is a highly polymorphic glycoprotein belonging to the mucin family and is the product of the MUC-1 gene.[1] Metastatic breast cancer is usually associated with circulating cancer-related antigens such as CA 15-3. In industrialized nations one in ten women can expect to be diagnosed with breast cancer at some point in her lifetime.[2] In the United States, it is estimated that there will be 193,700 new cases of this disease and 40,600 deaths in 2001.[3] While most newly diagnosed cases of breast cancer present with only local disease, where the 5 year survival rate is 96%, 42% are diagnosed with disease outside the breast.[4] For these women, the 5 year survival rate is 76% for those with regional disease and only 20% for those with distant metastases.[5] The vast majority of breast cancer deaths are from advanced, disseminated disease. Although many therapeutic modalities exist for the treatment of metastatic disease, most breast cancers usually become refractory to specific drugs and require second and third line regimens. A circulating tumor marker, such as CA 15-3, which can monitor response to therapy and can indicate disease status is a valuable tool in the management of these patients. It can be used for serial measurements to monitor both the course of disease and response to therapy because of the direct correlation of changing levels of CA 15-3 with clinical status.[6,7] In patients with known metastases, a reduction in levels of this marker indicates a good response to treatment, while increasing levels indicate resistance to therapy and progressive disease and justify further clinical evaluation and regular monitoring.[8] It has also recently been shown that an elevation of CA 15-3 levels above the upper limit of normal in patients with no clinical evidence of disease is an early indicator of recurrence. In a population of Stage II and III breast cancer patients in remission (n = 166) in which 15.7% demonstrated recurrent disease, an elevated serum CA 15-3 level provided a positive predictive value of 83.3% and a negative predictive value of 92.6% for recurrent disease. In this study, the average lead time from the first elevation of CA 15-3 was 5.3 months before recurrence was clinically established.[9]

Assay Principle

The ADVIA Centaur CA 15-3 assay is a fully automated, two-step sandwich immunoassay using direct, chemiluminescent technology. The Lite Reagent is composed of the monoclonal mouse antibody, DF3, specific for CA 15-3, labeled with acridinium ester. The Conjugate Reagent is composed of the monoclonal mouse antibody 115D8, specific for CA 15-3, labeled with fluorescein. The Solid Phase is composed of purified monoclonal mouse capture antibody, which is covalently coupled to paramagnetic particles. The sample is incubated with both Conjugate Reagent and Solid Phase simultaneously for 20 minutes. After incubation, the immuno-complex is washed and the Lite Reagent is added, incubated for an additional 20 minutes and then washed again. This two-step protocol eliminates high-dose hook effect in this assay.

The system automatically performs the following steps:

- dispenses 20 µL of sample into a cuvette
- dispenses 50 µL of Conjuate Reagent and 250 µL of Solid Phase and incubates for 20 minutes at 37°C
- washes with Wash 1
- resuspends with 250 µL of Wash 1
- dispenses 50 µL of Lite Reagent and incubates for 20 minutes at 37°C
- separates, aspirates and washes the cuvettes with Wash 1
- dispenses 300 µL each of Acid Reagent and Base Reagent to initiate the chemiluminescent reaction
- reports results according to the selected option, as described in the system operating instructions or in the online help system

A direct relationship exists between the amount of CA 15-3 present in the patient sample and the amount of relative light units (RLUs) detected by the system.

Specimen Collection and Handling

Serum is the recommended sample type for this assay.

Plasma samples should not be used because their performance in this assay has not been determined.

The following recommendations for handling and storing blood samples are furnished by the National Committee for Clinical Laboratory Standards:[10]

- Collect all blood samples observing universal precautions for venipuncture.
- Allow samples to clot adequately before centrifugation.
- Keep tubes stoppered and upright at all times.
- Do not use samples that have been stored at room temperature for longer than 8 hours.
- Tightly cap and refrigerate specimens at 2 to 8°C if the assay is not completed within 8 hours.
- Freeze samples at or below -20°C if the sample is not assayed within 24 hours. Mix thoroughly after thawing.

Before placing samples on the system ensure that:

- Samples are free of fibrin or other particulate matter. Remove particulates by centrifugation at 1000 x g for 15 to 20 minutes.
- Samples are free of bubbles.

106

Reagents

Store the reagents upright at 2–8°C.
Mix all primary reagent packs by hand before loading them onto the system. Visually inspect the bottom of the reagent pack to ensure that all particles are dispersed and resuspended. For detailed information about preparing the reagents for use, refer to Appendix C, *Handling Reagents*.

Reagent Pack	Reagent	Volume	Ingredients	Storage	Stability
ADVIA Centaur CA 15-3 ReadyPack primary reagent pack	Lite Reagent	5.0 mL/ reagent pack	monoclonal mouse anti-DF3 antibody (~ 2.0 µg/mL) labeled with acridinium ester in buffered saline with bovine serum albumin, sodium azide (< 0.1%), and preservatives	2–8°C	until the expiration date on the pack label. For onboard stability, refer to *Onboard Stability and Calibration Interval.*
	Solid Phase	25.0 mL/ reagent pack	monoclonal mouse capture antibody (~30 µg/mL) covalently coupled to paramagnetic particles in buffer with bovine serum albumin, sodium azide (< 0.1%), preservatives	2–8°C	until the expiration date on the pack label. For onboard stability, refer to *Onboard Stability and Calibration Interval.*
	Conjugate Reagent	5.0 mL/ reagent pack	monoclonal mouse anti-115D8 antibody (~12.5 µg/mL) labeled with a thiocarbamate of fluorescein in buffered saline with bovine serum albumin and preservatives	2–8°C	until the expiration date on the pack label. For onboard stability, refer to *Onboard Stability and Calibration Interval.*
ADVIA Centaur WASH 1 *	Wash 1	1500 mL/ pack	phosphate buffered saline with sodium azide (< 0.1%) and surfactant	2–25°C	until the expiration date on the vial or onboard – 1 month
ADVIA Centaur WASH 1 *	Wash 1	2500 mL/ pack	phosphate buffered saline with sodium azide (< 0.1%) and surfactant	2–25°C	until the expiration date on the vial or onboard – 1 month
ADVIA Centaur M-DIL 1 ReadyPack ancillary reagent pack	Multi-Diluent 1	25.0 mL/ reagent pack	equine serum with sodium azide (0.1%) and preservatives	2–8°C	until the expiration date on the pack label or 28 consecutive days after accessing the ancillary reagent pack

* See *Materials Required But Not Provided*

CAUTION: This device contains material of animal origin and should be handled as a potential carrier and transmitter of disease.

NOTE: Sodium azide can react with copper and lead plumbing to form explosive metal azides. On disposal, flush reagents with a large volume of water to prevent the buildup of azides, if disposal into a drain is in compliance with federal, state, and local requirements.

For *In Vitro* Diagnostic Use.

Loading Reagents

Ensure that the system has sufficient primary and ancillary reagent packs. For detailed information about preparing the system, refer to the system operating instructions or to the online help system.

Mix all primary reagent packs by hand before loading them onto the system. Visually inspect the bottom of the reagent pack to ensure that all particles are dispersed and resuspended. For detailed information about preparing the reagents for use, refer to Appendix C, *Handling Reagents*.

Load the ReadyPack reagent packs in the primary reagent area using the arrows as a placement guide. The system automatically mixes the primary reagent packs to maintain homogeneous suspension of the reagents. For detailed information about loading reagents, refer to the system operating instructions or to the online help system.

If automatic dilution of a sample is required, load ADVIA Centaur Multi-Diluent 1 in the ancillary reagent entry.

Onboard Stability and Calibration Interval

Onboard Stability	Calibration Interval
28 days	28 days

Additionally, the ADVIA Centaur CA 15-3 assay requires a two-point calibration:

- when changing lot numbers of primary reagent packs
- when replacing system components
- when quality control results are repeatedly out of range

NOTE:

- Discard the primary reagent packs at the end of the onboard stability interval.
- Do not use reagents beyond the expiration date.

Master Curve Calibration

The ADVIA Centaur CA 15-3 assay requires a Master Curve calibration when using a new lot number of Lite Reagent, Solid Phase, and Conjugate Reagent. For each new lot, use the barcode reader or keyboard to enter the Master Curve values on the system. The Master Curve card contains the Master Curve values. For detailed information about entering calibration values, refer to the system operating instructions or to the online help system.

Quality Control

For detailed information about entering quality control values, refer to the system operating instructions or to the online help system.

To monitor system performance and chart trends, as a minimum requirement, two levels of quality control material should be assayed on each day that samples are analyzed. Quality control samples should also be assayed when performing a two-point calibration. Treat all quality control samples the same as patient samples.

Siemens Healthcare Diagnostics recommends the use of commercially available quality control materials with at least 2 levels (low and high). A satisfactory level of performance is achieved when the analyte values obtained are within the Acceptable Control Range for the system or within your range, as determined by an appropriate internal laboratory quality control scheme.

If the quality control results do not fall within the Expected Values or within the laboratory's established values, do not report results. Take the following actions:

- Verify that the materials are not expired.
- Verify that required maintenance was performed.
- Verify that the assay was performed according to the instructions for use.

- Rerun the assay with fresh quality control samples.
- If necessary, contact your local technical support provider or distributor for assistance.

Sample Volume

This assay requires 20 µL of sample for a single determination. This volume does not include the unusable volume in the sample container or the additional volume required when performing duplicates or other tests on the same sample. Sample predilution is not required. Refer to *Dilutions* for information about samples with values above the assay range. For detailed information about determining the minimum required volume, refer to *Sample Volume Requirements* in the *ADVIA Centaur Reference Manual.*

Assay Procedure

For detailed procedural information, refer to the system operating instructions or to the online help system.

Procedural Notes

Calculations

For detailed information about how the system calculates results, refer to the system operating instructions or to the online help system.

The system reports serum CA 15-3 results in U/mL.

Dilutions

- Serum samples with levels of CA 15-3 greater than 200 U/mL must be diluted and retested to obtain accurate results.
- Patient samples can be automatically diluted by the system or prepared manually.
- For automatic dilutions, ensure that ADVIA Centaur Multi-Diluent 1 is loaded and set the system parameters as follows:

  Dilution point: ≤ 200 U/mL

  Dilution factor: 5, 10, 20

  For detailed information about automatic dilutions, refer to the system operating instructions or to the online help system.
- Manually dilute patient samples greater than 4000 U/mL, when patient results exceed those values obtained by automatic dilution, or when laboratory protocol requires manual dilution.
- Use Multi-Diluent 1 to manually dilute patient samples, and then load the diluted sample in the sample rack, replacing the undiluted sample.
- Ensure that results are mathematically corrected for dilution. If a dilution factor is entered when scheduling the test, the system automatically calculates the result.

Disposal

Dispose of hazardous and biologically contaminated materials according to the practices of your institution. Discard all materials in a safe and acceptable manner and in compliance with all federal, state, and local requirements.

Limitations

NOTE: Do not interpret levels of CA 15-3 as absolute evidence of the presence or the absence of malignant disease. Before treatment, patients with confirmed breast carcinoma frequently have levels of CA 15-3 within the range observed in healthy individuals. Additionally, elevated levels of CA 15-3 can be observed in patients with nonmalignant diseases. Measurements of CA 15-3 should always be used in conjunction with other diagnostic procedures, including information from the patient's clinical evaluation.

WARNING: Do not use the ADVIA Centaur CA 15-3 assay as a screening test or for diagnosis. Normal levels of CA 15-3 do not always preclude the presence of disease.

Heterophilic antibodies in human serum can react with reagent immunoglobulins, interfering with *in vitro* immunoassays.[11] Patients routinely exposed to animals or to animal serum products can be prone to this interference and anomalous values may be observed. Additional information may be required for diagnosis.

Evidence suggests that patients undergoing retinal fluorescein angiography can retain amounts of fluorescein in the body for up to 36 to 48 hours post-treatment. In the cases of patients with renal insufficiency, including many diabetics, retention could be much longer. Such samples can produce either falsely elevated or falsely depressed values when tested with this assay, and should not be tested.[12]

Exercise caution when interpreting ADVIA Centaur CA 15-3 levels during pregnancy.[13]

The concentration of CA 15-3 in a given specimen determined with assays from different manufacturers can vary because of differences in assay methods, calibration, and reagent specificity. CA 15-3 determined with different manufacturers' assays will vary depending on the method of standardization and antibody specificity. Therefore, it is important to use assay-specific values to evaluate quality control results.

Endogenous interferents, such as high concentrations of hemoglobin, lipids, bilirubin and total protein, had no effect beyond the limits of random within-run variations. Mean recoveries were within 5% of the control level for all interferents tested.

Substance	Amount Added	% Recovery
Conjugated Bilirubin	25 mg/dL	95.3
Triglycerides	900 mg/dL	106.2
Hemoglobin	1000 mg/dL	96.9
Total Protein	6.5 g/dL	101.0

Expected Results

To establish the performance characteristics of the ADVIA Centaur CA 15-3 assay, serum samples from 399 apparently healthy females were tested. The women were over the age of 18 years. The Upper Limit of Normal (ULN) for this group, defined as the 99th percentile of the observed results, was established at 32.4 U/mL.

As with all *in vitro* diagnostic assays, each laboratory should determine its own reference range(s) for the diagnostic evaluation of patient results.[14]

Additional data were generated on a panel of samples from patients with various diseases and conditions, as shown in the following table. These data indicate the percentage of samples with levels of CA 15-3 above the upper limit of normal.

Distribution of ADVIA Centaur CA 15-3 Assay Values

		ADVIA Centaur CA 15-3 Values (U/mL)			
Patient Population	**N**	**0 –32.4 (%)**	**> 32.4 –60 (%)**	**> 60 –100 (%)**	**> 100 (%)**
Healthy Females					
< 50 years	200	99.5	0.5	0	0
> 50 years	199	98	1.5	0.5	0
Total	399	99	0.8	0.2	0
Female Subjects: Malignant Diseases					
Breast					
Stage I	20	90	10	0	0
Stage II	22	95.5	0	0	4.5
Stage III	18	77.8	11.1	11.1	0
Stage IV	20	25	30	10	35
Cervix/Uterus	8	37.5	37.5	0	25
Colorectal	7	100	0	0	0
Liver	6	100	0	0	0
Lung	5	80	0	0	20
Ovary	6	66.7	16.7	16.7	0
Pancreas	8	62.5	12.5	12.5	12.5
Female Subjects: Non-malignant Breast Diseases	40	100	0	0	0

Thirty-four (34) Stage II and III breast cancer patients who were clinically free of disease following surgery and 20 Stage IV breast cancer patients were evaluated using longitudinal measurements of serum samples. The Stage II and III breast cancer patients included patients who subsequently developed disease recurrence and patients who had no disease recurrence over the course of follow-up. For each pair of serial measurements, an increase of equal to or greater than 21% was considered to indicate progression or recurrence, and a change of less than 21% was considered to indicate a lack of progression or lack of recurrence. The following two tables shows the overall correspondence of the serial CA 15-3 change when the ADVIA Centaur CA 15-3 assay values are compared to changes in disease status.

Monitoring Stage II and III Breast Cancer Patients for Recurrence: Serial Trends of ADVIA Centaur CA 15-3 Assay Results Compared to Disease Status

	ADVIA Centaur CA 15-3 Number of Patients	
Diagnosis	**> 21%**	**≤ 21%**
Recurrence	11	6
Lack of Recurrence	0	17
Total	11	23

Sensitivity = 64.7% (11/17) (95% CI 38.3% – 85.8%)
Specificity = 100% (17/17) (95% CI 80.5% – 100.0%)

Monitoring Stage IV Breast Cancer Patients for Changes in Disease Status: Serial Trends of ADVIA Centaur CA 15-3 Assay Results Compared to Disease Status

	ADVIA Centaur CA 15-3 Number of Patients	
Diagnosis	**> 21%**	**≤ 21%**
Progression	5	2
Lack of Progression	7	6
Total	12	8

Sensitivity = 71.4% (5/7) (95% CI 29.0% – 96.3%)
Specificity = 46.2% (6/13) (95% CI 19.2% – 74.9%)

Performance Characteristics

Specificity

There are no known cross-reactants for CA 15-3. The potential interference of chemotherapeutic agents was tested by adding these substances to a serum pool containing 37 U/mL of CA 15-3. The chemotherapeutic agents were spiked into this serum pool to a final concentration listed in parenthesis. These spiked pools were assayed for CA 15-3 and percent recovery to the unspiked pool was calculated.

Substance	Mean % Recovery	Substance	Mean % Recovery
Cis-Platinum (175 µg/mL)	97.5	Herceptin (400 µg/mL)	92.0
Cyclophosphamide (800 µg/mL)	99.0	Mitomycin C (75 µg/mL)	98.1
Diethylstilbesterolm (25 µg/mL)	100.7	Megestrol acetate (10 µg/mL)	99.8
Doxorubicin HCl (50 µg/mL)	97.5	Methotrexate (450 µg/mL)	104.1
Etoposide (10 µg/mL)	96.0	Tamoxifen (60 µg/mL)	99.7
5-Fluorouracil (1 µg/mL)	99.8	Vincristine (1.5 µg/mL)	97.0
Flutamide (10 µg/mL)	100.6		

Interference testing was determined according to NCCLS Document EP7-P.[15]

Analytical Sensitivity and Assay Range

The ADVIA Centaur CA 15-3 assay measures CA 15-3 concentrations up to 200 U/mL with a minimum detectable concentration (analytical sensitivity) of 0.50 U/mL. Analytical sensitivity is defined as the concentration of CA 15-3 that corresponds to the RLUs that are two standard deviations more than the mean RLUs of replicate determinations of the CA 15-3 zero standard. This response is an estimate of the minimum detectable concentration with 95% confidence.

Method Comparison

For 128 samples in the range of 4.0 to 186.0 U/mL, the relationship of the ADVIA Centaur CA 15-3 assay to the Bayer Immuno 1® CA 15-3 assay is described by the following equation (calculated using Deming Regression):

ADVIA Centaur CA 15-3 = 1.018 (Bayer Immuno 1) – 4.0 U/mL

Dilution Recovery

Four human serum samples in the range of 76.1 to 205.5 U/mL of CA 15-3 were diluted 1:2, 1:4, 1:8, and 1:16 with Multi-Diluent 1 and assayed for recovery and parallelism. The recoveries ranged from 87.0 to 104.8% with a mean of 98.5%.

Sample	Dilution	Observed (U/mL)	Expected (U/mL)	Recovery %
1	—	76.1		
	1:2	39.9	38.0	104.8
	1:4	19.3	19.0	101.2
	1:8	8.8	9.5	92.2
	1:16	4.4	4.8	92.6
	Mean			97.7
2	—	96.0		
	1:2	50.0	48.0	104.1
	1:4	25.0	24.0	104.2
	1:8	10.9	12.0	91.0
	1:16	5.2	6.0	87.0
	Mean			96.6

112

Sample	Dilution	Observed (U/mL)	Expected (U/mL)	Recovery %
3	—	117.9		
	1:2	60.1	58.9	102.0
	1:4	30.0	29.5	102.0
	1:8	15.1	14.7	102.0
	1:16	6.9	7.4	94.0
	Mean			100.0
4	—	205.5		
	1:2	101.5	102.8	99.0
	1:4	52.6	51.4	102.0
	1:8	25.4	25.7	99.0
	1:16	12.6	12.9	98.0
	Mean			99.5
Mean				**98.5**

Spiking Recovery

Varying amounts of CA 15-3 were added to four serum samples with endogenous levels of CA 15-3 ranging from 7.5 to 27.5 U/mL. The amount of CA 15-3 that was added varied from 40 to 150 U/mL. When compared to the expected value, the measured (recovered) values of CA 15-3 averaged 93.6% with a range of 89.5 to 101.6%.

Sample	Amount Added (U/mL)	Observed (U/mL)	Recovery %
1	—	7.5	
	40.0	43.3	89.5
	150.0	144.4	91.3
	Mean		90.4
2	—	25.0	
	40.0	61.3	90.6
	150.0	163.1	92.1
	Mean		91.4
3	—	18.9	
	40.0	59.6	101.6
	150.0	164.9	97.3
	Mean		99.5
4	—	27.5	
	40.0	66.1	96.3
	150.0	162.7	90.1
	Mean		93.2
Mean			93.6

Precision (Reproducibility)

Eight samples were assayed 3 times, in 10 runs, on 1 system (n = 30 for each sample), over a period of 5 days. The total % CV had a range of 3.0 to 4.3%. The within-run % CV was under 3.7% for all samples. The following table is a summary of the results.

Mean (U/mL)	Within-run % CV	Within-day % CV	Total % CV
13.0	3.7	0.0	4.3
18.4	3.6	1.5	4.0
21.9	2.4	2.2	3.2
34.5	2.8	1.6	3.2
35.9	3.2	2.2	4.0
45.5	3.1	0.0	4.1
94.9	3.2	2.1	3.8
185.7	2.8	0.8	3.0

Traceability of Standardization

The ADVIA Centaur CA 15-3 assay is traceable to an internal standard manufactured using highly purified material. Currently there is no reference standard for this assay. Assigned values for calibrators are traceable to this standardization.

Evaluating Results

The following is recommended when you observe poor reproducibility of CA 15-3 values at low levels or if you are not satisfied with assay performance:

- Ensure that the assay reagent and calibrator lot numbers and expiration dates match those entered in the system.
- Ensure that the calibrators, quality control materials, and assay reagents were prepared according to the recommended procedures.
- Ensure that the recommended sample collection and handling procedures were followed.
- Ensure that the recommended system cleaning procedures were followed.
- Ensure that Type II reagent water was used when operating the system.[16]
- Ensure that Wash 1 was used when operating the system.
- Visually check the probe and tubing for obstructions, leaks, and deformities such as pinched or crimped tubing.
- Take further corrective action following established laboratory procedures.
- Calibrate the system using new assay reagents, calibrators, and quality control samples.
- If necessary, contact your local technical support provider or distributor for assistance.

Technical Assistance

For customer support, contact your local technical support provider or distributor.

www.siemens.com/diagnostics

114

References

1. Reddish MA, Helbrecht N, Almeida AF, et al. Epitope mapping of MAb B27.29 within the peptide core for the malignant breast varcinoma-associated mucin antigen coded for by the human MUC-1 gene. J Tumor Marker Oncol. 1992, 7:19-27.
2. Venture Planning Group, 1996.
3. Cancer Facts and Figures, American Cancer Society, 2001.
4. Breast Cancer Facts and Figures, American Cancer Society, 1995.
5. Smart CR, Byrne C, Smith RA, et al. Twenty year follow-up of the breast cancers diagnosed during the breast cancer detection demonstration project. CA, a Cancer Journal for Clinicians, 1997, 47:134-149.
6. Abbate I, Correale M, Musci MD, and Dragone D. Monoclonal antibody B27.29 against mucinous breast cancer associated antigen CA 27.29 in breast cancer. Br Cancer Res and Treatment 1991, 19(2):123.
7. Dinistrain AM, Schwartz MK, Greenberg EJ, Smith CA, Schwartz DC, Maimonis P. Evaluation of a breast cancer antigen assayed on the Ciba Corning ACS:180 Automated Chemiluminescence System. 1996, J Tumor Marker Oncol. 11(3):5-10.
8. Bon GG, von Mensdorff-Pouilly S, Kenemans P, van Kamp GJ, et al. Clinical and technical evaluation of ACS BR serum assay of MUC-1 gene-derived glycoprotein in breast cancer, and comparison with CA 15-3 assays. Clin Chem, 1997, 43(4):585-593.
9. Chan DW, Beveridge RA, Muss H, et al. Use of Truquant BR Radioimmunoassay for early detection of breast cancer recurrence in patients with Stage II and Stage III disease. J Clin Oncol 1997, 15(6):2322-2328.
10. National Committee for Clinical Laboratory Standards. Procedures for the handling and processing of blood specimens; second edition; approved guideline. NCCLS Document H18-A2; Wayne (PA): NCCLS; 1999 Oct. 40p.
11. Boscato LM, Stuart MC. Heterophilic antibodies: a problem for all immunoassays. Clin Chem 1988;34:27–33.
12. Inloes R, Clark, D and Drobnies A: Interference of fluorescein, used in retinal angiography with certain clinical laboratory tests. Clin Chem 1987, 33:2126-2127.
13. Bombardieri E, Pizzichetta M, Veronesi P, et al. CA 15-3 determination in patients with breast cancer: clinical utility for the detection of distant metastases. Eur J Cancer 1993;29A(1):144–6.
14. National Committee for Clinical Laboratory Standards. How to define, determine, and utilize reference intervals in the clinical laboratory; approved guideline. NCCLS Document C28-A. Wayne (PA): NCCLS; 1995 June 59p.
15. National Committee for Clinical Laboratory Standards. Interference testing in clinical chemistry. Proposed Guideline. NCCLS document EP7-P. Wayne (PA):NCCLS;1986.
16. Reagent Water Technical Bulletin. Siemens Healthcare Diagnostics, 107060.

ADVIA Centaur and ReadyPack are trademarks of Siemens Healthcare Diagnostics.

Bayer Immuno 1 is a trademark of Siemens Healthcare Diagnostics.

CA 15-3 is a trademark of Fujirebio Diagnostics, Inc.

© 2008 Siemens Healthcare Diagnostics Inc. All rights reserved.

US Pats 4,948,192; 5,110,932; 5,655,426; 5,609,822; 5,788,928

Origin: US

Siemens Healthcare Diagnostics Inc.
Tarrytown, NY 10591-5097 USA

EC REP Siemens Healthcare Diagnostics Ltd.
Sir William Siemens Sq.
Frimley, Camberley, UK GU16 8QD

Siemens Healthcare
Diagnostics Pty Ltd
885 Mountain Highway
Bayswater Victoria 3153
Australia

シーメンスヘルスケア・
ダイアグノスティクス株式会社
東京都品川区東五反田 3−20−14
Siemens Healthcare Diagnostics
輸入

CA 19-9

Assay Summary

Sample Type	**Serum**
Sample Volume	**75 µL**
Calibrator	**CA 19-9**
Sensitivity and Assay Range	**1.2–700 U/mL**

Contents

REF	Contents	Number of Tests
10491244	5 ReadyPack® primary reagent packs containing ADVIA Centaur® CA 19-9 Lite Reagent and Solid Phase	250
	ADVIA Centaur CA 19-9 Master Curve card	
	2 vials of lyophilized CA 19-9 Low Calibrator CAL L	
	2 vials of lyophilized CA 19-9 High Calibrator CAL H	
	Barcode labels for the calibrators	
	CA 19-9 Calibrator Assigned Value card	
or		
10491379	1 ReadyPack primary reagent pack containing ADVIA Centaur CA 19-9 Lite Reagent and Solid Phase	50
	ADVIA Centaur CA 19-9 Master Curve card	
	1 vial of lyophilized CA 19-9 Low Calibrator CAL L	
	1 vial of lyophilized CA 19-9 High Calibrator CAL H	
	Barcode labels for the calibrators	
	CA 19-9 Calibrator Assigned Value card	

For a definition of symbols used in product labeling, refer to *Understanding the Symbols* in Appendix D.

Intended Use

The ADVIA Centaur CA 19-9 Assay is an *in vitro* immunoassay for the quantitative measurement of the CA 19-9 tumor-associated antigen, in human serum, using the ADVIA Centaur and ADVIA Centaur XP systems. This assay is indicated for the serial measurement of CA 19-9 to aid in the management of patients diagnosed with cancers of the exocrine pancreas. The test is useful as an aid in monitoring of disease status in those patients having confirmed pancreatic cancer who have levels of serum CA 19-9 at some point in their disease process exceeding the median concentration determined for the apparently healthy cohort. CA 19-9 values must be interpreted in conjunction with all other clinical and laboratory data before a medical decision is determined.

WARNING: The concentration of CA 19-9 in a given specimen, as determined by assays from different manufacturers, can vary due to differences in assay methods and reagent specificity. The results reported by the laboratory to the physician must include the identity of the assay for CA 19-9 used. Values obtained with different assay methods cannot be used interchangeably. If, in the course of monitoring a patient, the assay method used for determining serial levels of CA 19-9 is changed, the laboratory must perform additional serial testing to confirm baseline values. The ADVIA Centaur CA 19-9 assay is based on the 1116-NS-19-9 antibody available through agreement with Fujirebio Diagnostics, Inc. Assays using antibodies other than 1116-NS-19-9 may give different results.

Patients must possess the ability to express the Lewis blood group antigen or they will be unable to produce the CA 19-9 antigen even in the presence of proven malignancy. A patient with a positive genotype for the Lewis antigen may produce varying levels of CA 19-9. Phenotyping for the presence of the Lewis blood group antigen may be insufficient to detect true Lewis antigen negative individuals.

United States federal law restricts this device to sale and distribution by or on the order of a physician, or to a clinical laboratory; and use is restricted to, by, or on the order of a physician.

The ADVIA Centaur CA 19-9 assay is not intended for use on any other system.

Materials Required but Not Provided

REF	Description	Contents
01137199 (112351)	ADVIA Centaur Wash 1 [WASH 1]	2 x 1500 mL/pack
or		
03773025	ADVIA Centaur Wash 1 [WASH 1] *	2 x 2500 mL/pack

* for use with systems with 2500 mL capacity

Optional Reagents

REF	Description	Contents
10491972	ADVIA Centaur CA 19-9 Diluent [DIL]	2 ReadyPack ancillary reagent packs containing 5 mL/pack
10491974	ADVIA Centaur CA 19-9 Diluent [DIL]	25 mL/vial
123518	CA 19-9 Master Curve Material	8 x 1 mL

Summary and Explanation of the Test

CA 19-9 is a tumor-associated antigen that is reactive with an antibody that was produced in response to immunization with a human colon cancer cell-line. Although the antibody was derived from a colon cancer cell-line, studies have found assays for CA 19-9 more useful in the diagnosis and management of patients with pancreatic cancer than colon neoplasia.[1,2] CA 19-9 has also been shown to be a more sensitive and specific marker of pancreatic cancer than other serologic markers.[2]

Very little of the CA 19-9 antigen is found in the blood of normal patients or those with benign disorders, but most patients with pancreatic cancer have elevated levels of CA 19-9. Many published studies have shown that patients on various therapeutic regimens with clinically stable or responsive disease had stable or decreasing serum CA 19-9 levels, whereas patients with progressive disease had rising serum levels of CA 19-9.[3-7]

Willet et al. examined CA 19-9 levels in 42 patients who received neo-adjuvant treatment of external beam radiation and 5-fluorouracil.[3] Nine of the 10 patients (90%) with increased CA 19-9 levels after treatment had distant metastases or localized tumor progression. This was in contrast to 6 of 29 patients (21%) who had decreasing CA 19-9 values and who developed distal metastases or local tumor progression. The authors concluded that serum CA 19-9 levels may rise or fall during neo-adjuvant therapy with a falling CA 19-9 indicating disease control in the majority of patients. In a separate study, Bac et al. monitored 21 patients with proven adenocarcinoma of the pancreas treated with chemotherapy.[4] In 14 of the patients (67%), serial measurements of CA 19-9 serum levels were correlated to clinical response by CT and/or ultrasound. Clinically stable disease and progressive disease were accompanied by stable or exponentially rising CA 19-9 levels.

The clinical management of pancreatic cancer is extremely difficult with most pancreatic cancers having metastasized by the time of diagnosis. Treatment consists of surgical intervention, radiation therapy, chemotherapy and palliative care measures as well as nutritional management. Monitoring the progression of disease is critical in the management of this disease. Therefore, the serial monitoring of CA 19-9 levels as an adjunct to imaging and clinical assessment is valuable in the management of pancreatic cancer patients.

Assay Principle

The ADVIA Centaur CA 19-9 assay is a two-step sandwich immunoassay using direct chemiluminometric technology which uses a single monoclonal antibody, 1116-NS-19-9, for both the Solid Phase and Lite Reagent. The antibody is covalently coupled to paramagnetic particles in the Solid Phase and the same clone of antibody is labeled with acridinium ester in the Lite Reagent. The sample and Solid Phase are incubated at 37°C for 7.5 minutes followed by a wash step to remove excess unbound antigens. The Lite Reagent is then reacted with the Solid Phase-bound CA 19-9 antigens for an additional 20-minute incubation. Therefore, the high-dose hook effect is eliminated in this assay.

The system automatically performs the following actions:

- Dispenses 75 µL of sample into a cuvette.
- Dispenses 350 µL of Solid Phase and incubates for 7.5 minutes at 37°C.
- Aspirates, and washes the cuvettes with Wash 1.
- Resuspends in 100 µL of reagent water.[8]
- Dispenses 100 µL of Lite Reagent and incubates for 20 minutes at 37°C.
- Aspirates, and washes the cuvettes with Wash 1 and then with reagent water.[8]
- Dispenses 300 µL each of Acid Reagent and Base Reagent to initiate the chemiluminescent reaction.
- Reports results according to the selected option, as described in the system operating instructions or in the online help system.

A direct relationship exists between the concentration of CA 19-9 present in a patient sample and the amount of relative light units (RLUs) detected by the system.

Specimen Collection and Handling

Serum is the recommended sample type for this assay.

Plasma samples should not be used because their performance in this assay has not been determined.

The following recommendations for handling and storing blood samples are furnished by the Clinical and Laboratory Standards Institute (CLSI, formerly NCCLS):[9]

- Collect all blood samples observing universal precautions for venipuncture.
- Allow samples to clot adequately before centrifugation.
- Keep tubes stoppered and upright at all times.
- Do not use samples that have been stored at room temperature for longer than 8 hours.
- Tightly cap and refrigerate specimens at 2° to 8°C if the assay is not completed within 8 hours.
- Freeze samples at or below -20°C if the sample is not assayed within 48 hours.
- Freeze samples only once and mix thoroughly after thawing.

Before placing samples on the system, ensure that samples have the following characteristics:

- Samples are free of fibrin or other particulate matter. Remove particulates by centrifugation at 1000 x g for 15 to 20 minutes.
- Samples are free of bubbles.

Reagents

Store the reagents upright at 2–8°C.
Mix all primary reagent packs by hand before loading them onto the system. Visually inspect the bottom of the reagent pack to ensure that all particles are dispersed and resuspended. For detailed information about preparing the reagents for use, refer to Appendix C, *Handling Reagents*.

Keep away from sunlight.
Protect reagent packs from all heat and light sources. Reagent packs loaded on the system are protected from light. Store unused reagent packs at 2–8°C away from light sources.

Reagent Pack	Reagent	Volume	Ingredients	Storage	Stability
ADVIA Centaur CA 19-9 ReadyPack primary reagent pack	Lite Reagent	5.0 mL/ reagent pack	monoclonal mouse anti- CA 19-9 antibody (~0.4 µg/mL) labeled with acridinium ester in buffer with protein stabilizers, sodium azide (< 0.1%), and preservatives	2–8°C	Until the expiration date on the pack label. For onboard stability, refer to *Onboard Stability and Calibration Interval.*
	Solid Phase	17.5 mL/ reagent pack	monoclonal mouse anti- CA 19-9 antibody (~0.02 mg/mL) covalently coupled to paramagnetic particles in buffer with protein stabilizers, sodium azide (< 0.1%), and preservatives	2–8°C	Until the expiration date on the pack label. For onboard stability, refer to *Onboard Stability and Calibration Interval.*
CA 19-9 calibrator vials	Calibrators	2.0 mL/ vial	after reconstitution, low or high levels of human-source CA19-9 in fetal bovine serum with sodium azide (< 0.1%), and preservatives	2–8°C	Lyophilized–until the expiration date on the vial label or reconstituted–14 days or onboard–8 hours.
ADVIA Centaur WASH 1 *	Wash 1	1500 mL/ pack	phosphate buffered saline with sodium azide (< 0.1%) and surfactant	2–25°C	Until the expiration date on the vial or onboard – 1 month.

119

Reagent Pack	Reagent	Volume	Ingredients	Storage	Stability
ADVIA Centaur WASH 1 *	Wash 1	2500 mL/ pack	phosphate buffered saline with sodium azide (< 0.1%) and surfactant	2–25°C	Until the expiration date on the vial or onboard – 1 month.
ADVIA Centaur CA 19-9 DIL ReadyPack ancillary reagent pack	CA 19-9 Diluent	5.0 mL/ reagent pack	DISPO buffer with sodium azide (< 0.1%) and preservatives	2–8°C	Until the expiration date on the pack label or 14 consecutive days after accessing the ancillary reagent pack.

* See *Materials Required but Not Provided.*

R22 **R52/53** **HARMFUL!** Harmful if swallowed. Harmful to aquatic organisms, may cause long-term adverse effects in the aquatic environment. **Contains:** sodium azide; Calibrators

CAUTION! POTENTIAL BIOHAZARD: Contains human source material. While each human serum or plasma donor unit used in the manufacture of this product was tested by FDA-approved methods and found nonreactive for hepatitis B surface antigen (HBsAg), antibody to hepatitis C (HCV), and antibody to HIV-1/2, all products manufactured using human source material should be handled as potentially infectious. Because no test method can offer complete assurance that hepatitis B or C viruses, HIV, or other infectious agents are absent, these products should be handled according to established good laboratory practices. [10,11,12]

CAUTION: This device contains material of animal origin and should be handled as a potential carrier and transmitter of disease.

NOTE: Sodium azide can react with copper and lead plumbing to form explosive metal azides. On disposal, flush reagents with a large volume of water to prevent the buildup of azides, if disposal into a drain is in compliance with federal, state, and local requirements.

For *in vitro* diagnostic use.

Loading Reagents

Ensure that the system has sufficient primary and ancillary reagent packs. For detailed information about preparing the system, refer to the system operating instructions or to the online help system.

Mix all primary reagent packs by hand before loading them onto the system. Visually inspect the bottom of the reagent pack to ensure that all particles are dispersed and resuspended. For detailed information about preparing the reagents for use, refer to Appendix C, *Handling Reagents*.

Load the ReadyPack reagent packs in the primary reagent area using the arrows as a placement guide. The system automatically mixes the primary reagent packs to maintain homogeneous suspension of the reagents. For detailed information about loading reagents, refer to the system operating instructions or to the online help system.

If automatic dilution of a sample is required, load ADVIA Centaur CA 19-9 Diluent in the ancillary reagent entry.

NOTE: The CA 19-9 Calibrators provided in this kit are matched to the Solid Phase and Lite Reagent. Do not mix CA 19-9 Calibrator lots with different lots of Solid Phase and Lite Reagent.

Onboard Stability and Calibration Interval

Onboard Stability	Calibration Interval
28 days	28 days

Additionally, the ADVIA Centaur CA 19-9 assay requires a two-point calibration:

- when changing lot numbers of primary reagent packs
- when replacing system components
- when quality control results are repeatedly out of range

NOTE:

- Discard the primary reagent packs at the end of the onboard stability interval.
- Do not use reagents beyond the expiration date.

Effect of Ambient Temperature on Results

CAUTION: The ADVIA Centaur CA 19-9 assay is susceptible to ambient temperature change, which has the potential to affect recoveries of patient samples and controls. The recoveries of patient samples and control materials may change by approximately 4% for each Celsius degree change in ambient temperature.

Quality control results for this assay will reflect any temperature effects on assay results. To ensure optimal assay performance, each laboratory should determine how often quality control material is run based on the ambient temperature conditions for that laboratory. If quality control values are out of range, recalibrate and repeat the assay.

Master Curve Calibration

The ADVIA Centaur CA 19-9 assay requires a Master Curve calibration when using a new lot number of Lite Reagent and Solid Phase. For each new lot number of Lite Reagent and Solid Phase, use the barcode reader or keyboard to enter the Master Curve values on the system. The Master Curve card contains the Master Curve values. For detailed information about entering calibration values, refer to the system operating instructions or to the online help system.

Preparing Calibrators

Prepare calibrators using the following steps:

1. Add 2.0 mL of reagent water[8] into each calibrator vial using a volumetric or precision pipet.
2. Let the calibrators stand for 15 to 20 minutes at room temperature (20° to 30°C) to allow the lyophilized material to dissolve.
3. Gently swirl and invert the vials until homogeneous.

Using Barcode Labels

NOTE: Calibrator barcode labels are lot-number specific. Do not use barcode labels from one lot of calibrators with any other lot of calibrators.

Use the CA 19-9 Calibrator barcode labels to label the Low and High Calibrator sample cups when performing the CA 19-9 assay. Place the barcode label on the sample cup so that the readable characters on the side of the label are vertical on the sample cup.

Quality Control

For detailed information about entering quality control values, refer to the system operating instructions or to the online help system.

To monitor system performance and chart trends, as a minimum requirement, two levels of quality control material should be assayed on each day that samples are analyzed. Quality control samples should also be assayed when performing a two-point calibration. Treat all quality control samples the same as patient samples.

Siemens Healthcare Diagnostics recommends the use of commercially available quality control materials with at least 2 levels (low and high). A satisfactory level of performance is achieved when the analyte values obtained are within the Acceptable Control Range for the system or within your range, as determined by an appropriate internal laboratory quality control scheme.

If the quality control results do not fall within the Expected Values or within the laboratory's established values, do not report results. Take the following actions:

- Verify that the materials are not expired.
- Verify that required maintenance was performed.
- Verify that the assay was performed according to the instructions for use.
- Rerun the assay with fresh quality control samples.
- If necessary, contact your local technical support provider or distributor for assistance.

Sample Volume

This assay requires 75 µL of sample for a single determination. This volume does not include the unusable volume in the sample container or the additional volume required when performing duplicates or other tests on the same sample. For detailed information about determining the minimum required volume, refer to *Sample Volume Requirements* in the *ADVIA Centaur Reference Manual.*

Assay Procedure

For detailed procedural information, refer to the system operating instructions or to the online help system.

Procedural Notes

Calculations

For detailed information about how the system calculates results, refer to the system operating instructions or to the online help system.

The system reports serum CA 19-9 results in U/mL.

Dilutions

The following information pertains to dilutions:

- Serum samples with levels of CA 19-9 greater than 700 U/mL must be diluted and retested to obtain accurate results.
- Patient samples can be automatically diluted by the system or prepared manually.

- For automatic dilutions, ensure that ADVIA Centaur CA 19-9 Diluent is loaded and set the system parameters as follows:

  Dilution point: ≤ 700 U/mL

  Dilution factor: 10, 100, 200

  For detailed information about automatic dilutions, refer to the system operating instructions or to the online help system.
- Manually dilute the patient samples when patient results exceed the linearity of the assay using automatic dilution, or when laboratory protocol requires manual dilution.
- Use ADVIA Centaur CA 19-9 Diluent to manually dilute patient samples, and then load the diluted sample in the sample rack, replacing the undiluted sample.
- Ensure that results are mathematically corrected for dilution. If a dilution factor is entered when scheduling the test, the system automatically calculates the result.

High-Dose Hook Effect

In the ADVIA Centaur CA 19-9 assay, patient samples with levels of CA 19-9 as high as 5,800,000 U/mL do not demonstrate a paradoxical decrease in the relative light units (RLUs).

Disposal

Dispose of hazardous and biologically contaminated materials according to the practices of your institution. Discard all materials in a safe and acceptable manner and in compliance with all federal, state, and local requirements.

Limitations

NOTE: Do not interpret serum levels of CA 19-9 as absolute evidence of the presence or the absence of malignant disease. Before treatment, patients with confirmed GI carcinoma frequently have levels of CA 19-9 within the range observed in healthy individuals. Furthermore, patients known to be genetically negative for the Lewis blood group antigens will be unable to produce the CA 19-9 antigen even in the presence of malignant tissue. Phenotyping for the presence of the Lewis blood group antigen may be insufficient to detect true Lewis antigen negative individuals. Even patients who are genotype positive for the Lewis antigen may produce varying levels of CA 19-9 as the result of gene dosage effect. Additionally, elevated levels of CA 19-9 can be observed in patients with nonmalignant diseases. Measurements of CA 19-9 should always be used in conjunction with other diagnostic procedures, including information from the patient's clinical evaluation.

WARNING: This device is not indicated for screening or the early detection of pancreatic cancer or as a diagnostic tool to confirm the presence or absence of malignant pancreatic disease. Do not predict disease recurrence solely on levels of ADVIA Centaur CA 19-9. Normal levels of ADVIA Centaur CA 19-9 do not always preclude the presence of disease.

The concentration of CA 19-9 in a given specimen determined with assays from different manufacturers can vary because of differences in assay methods, calibration, and reagent specificity. CA 19-9 determined with different manufacturers' assays will vary depending on the method of standardization and antibody specificity. Therefore, it is important to use assay-specific values to evaluate quality control results.

Heterophilic antibodies in human serum can react with reagent immunoglobulins, interfering with *in vitro* immunoassays.[13] Patients routinely exposed to animals or to animal serum products can be prone to this interference and anomalous values may be observed. Additional information may be required for diagnosis.

Endogenous interfering substances, such as high concentrations of hemoglobin, triglycerides, protein (human serum albumin) and bilirubin, have no effect beyond the limits of random within-run variations. Recoveries were within 10% of the control level for all interfering substances tested.

Serum specimens that are . . .	Demonstrate ≤ 10.0% change in results up to . . .
hemolyzed	1200 mg/dL of hemoglobin
lipemic	3500 mg/dL of triglycerides
icteric	60 mg/dL of bilirubin
proteinemic	14 g/dL of protein

Expected Results

To establish the performance characteristics of the ADVIA Centaur CA 19-9 assay, serum samples from 427 apparently healthy subjects, comprised of 203 females and 224 males, were tested. The Upper Limit of Normal (ULN) for this group, defined as the 97.5th percentile of the observed results, was 35 U/mL.

Additional data were generated on the patient populations as shown below. These data show the percent of samples whose levels of CA 19-9 are elevated above the ULN.

Sample Category	N	Median (U/mL)	Mean (U/mL)	% > ULN	Range (U/mL)
Benign Diseases					
GI Tract	99	11.0	13.8	4.0	4.5–51.8
Pancreas	100	13.9	16.7	8.0	3.9–50.6
Chronic Heart Disease/Hypertension	100	10.4	12.5	5.0	3.6–38.8
Urogenital Tract	132	11.4	13.8	4.5	3.1–48.1
Malignant Diseases (Treated)					
Lung/Liver	89	15.1	204.9	25.8	4.4–14,618
Breast/Ovarian/Cervical	87	14.8	53.6	25.3	3.5–863.3
Gall Bladder/Biliary	41	169.3	1681.8	61.0	4.1–23,333
Pancreatic	31	145.6	3466.8	67.7	5.9–56,240
Colorectal	183	22.5	395.8	44.3	2.6–20,049
Other	43	9.2	18.7	9.3	3.5–209.6

As with all diagnostic assays, each laboratory should determine its own reference range(s) for the diagnostic evaluation of patient results.[14]

The clinical utility of ADVIA Centaur CA 19-9 Assay in monitoring the disease status in those patients having confirmed pancreatic cancer was evaluated using retrospective serum samples. CA 19-9 values were measured in 59 patients with histologically confirmed pancreatic cancer. The median total time in the study was 309 days (10 months). These results were separated into groups that either demonstrated CA 19-9 values that paralleled the clinical course of disease, or CA 19-9 values that did not parallel the clinical course of disease. Serial measurements were analyzed on a per-patient basis as well as visit-to-visit basis. For each pair of serial measurements, an increase of greater than 15% on the ADVIA Centaur CA 19-9 was considered to indicate progression, and an increase of less than or equal to 15% was considered to indicate a lack of progression. The following two tables show the overall correspondance of the serial CA 19-9 change with changes in clinical status.

Monitoring of Pancreatic Cancer Patients for Changes in Disease Status: Correspondence of Serial CA 19-9 Changes and Clinical Status (Per-Patient Analysis)

	Change in Disease State		
Change in CA 19-9	**Progression**	**No Progression**	**Total**
> 15% increase	30	17	47
≤ 15% increase	4	8	12
Total	34	25	59

Concordance = (30+8)/59 = 64.4% (95% CI of 54.9–76.3%)

Predictive Value (No Progression) = 8/25 = 32.0% (95% CI of 18.0–53.5%)

Predictive Value (Progression) = 30/34 = 88.2% (95% CI of 76.4–96.7%)

Monitoring of Pancreatic Cancer Patients for Changes in Disease Status: Correspondence of Serial CA 19-9 Changes and Clinical Status (Visit-to-Visit Analysis)

	Change in Disease State		
Change in CA 19-9	**Progression**	**No Progression**	**Total**
> 15% increase	39	27	66
≤ 15% increase	18	47	65
Total	57	74	131

Concordance = (39+47)/131 = 65.7% (95% CI of 54.9–76.3%)

Predictive Value (No Progression) = 47/74 = 63.5% (95% CI of 52.9–77.4%)

Predictive Value (Progression) = 39/57 = 68.4% (95% CI of 56.6–80.1%)

Performance Characteristics

Specificity

There are no known cross-reactants for CA 19-9.

The potential interference of chemotherapeutic agents, therapeutic drugs, and other tumor marker antigens was tested by adding these substances to serum pools containing CA 19-9 ranging from 38.4 to 235 U/mL. The level of CA 19-9 in each of these pools was then determined and normalized to the level without the respective drugs or antigens.

Substance	Amount Added	Mean % Recovery (Spike/control x 100)
Carcinoembryonic antigen (CEA)	1 µg/mL	101.7
PSA	100 ng/mL	98.2
CA 15-3	100 U/mL	103.2
CA 125	1000 U/mL	105.2
Serum alpha-fetoprotein (AFP)	300 ng/mL	98.5
Rheumatoid factor 1	29 U/mL	98.9
Rheumatoid factor 2	29 U/mL	95.7
Rheumatoid factor 3	129 U/mL	102.3
HAMA	1.70E-03 mg/mL	96.2
5-fluorouracil / Adrucil	1 mg/mL	100.8
Acetaminophen /Tylenol	0.2 mg/mL	99.4
Acetylsalicylic acid / aspirin	0.5 mg/mL	99.1
Adriamycin / Doxorubicin-HCL	0.1 mg/mL	101.5
Amethopterin-hydrate, Methotrexate	4.5 mg/mL	108.0
Amikacin / Amikin-sulfate salt	0.15 mg/mL	100.6
Caffeine	0.1 mg/mL	99.2
Cisplatin-dichloride	1 mg/mL	99.2
Cortisol / hydrocortisone disodium salt	1 mg/mL	98.3

Substance	Amount Added	Mean % Recovery (Spike/control x 100)
Coumarin / 3-(a-acetonylbenzyl)-4-hydroxycoumarin, sodium salt	0.14 mg/mL	100.1
Cyclophosphamide / Cytoxan	0.25 mg/mL	101.9
Cyclosporin A	2.97E-06 mg/mL	103.3
Digoxin	5.00E-05 mg/mL	100.7
Gentamycin-sulfate	0.12 mg/mL	105.0
Heparin	500 U/mL	101.7
Levamisole / Tetramisole	50 mg/mL	102.2
Lithium carbonate / Eskalith	0.035 mg/mL	102.7
Mitomycin C	0.06 mg/mL	99.1
Novatrone / mitoxanntrone	0.5 mg/mL	100.9
Oxiliplatin	0.25 mg/mL	105.5
Paclitaxel	3.50E-06 mg/mL	109.4
Phenytoin sodium salt / Dilantin	0.1 mg/mL	98.7
Propanolol-HCL / Inderal	5.00E-03 mg/mL	98.3
Salicylate / salicylic acid-sodium salt	0.5 mg/mL	97.6
Theophylline / Aminophylline	0.25 mg/mL	97.8

Interference testing was determined according to CLSI Document EP7-A2.[15]

Sensitivity and Assay Range

The ADVIA Centaur CA 19-9 assay measures CA 19-9 concentrations up to 700 U/mL with a minimum detectable concentration (analytical sensitivity) of 1.2 U/mL. Analytical sensitivity is defined as the concentration of CA 19-9 that corresponds to the RLUs that are two standard deviations greater than the mean RLUs of 20 replicate determinations of the CA 19-9 zero standard.

Method Comparison

For 360 samples in the range of 1.2 to 700 U/mL, the relationship of the ADVIA Centaur CA 19-9 assay to an alternate CA 19-9 RIA assay is described by the following equation:

ADVIA Centaur CA 19-9 = 0.97 (Fujirebio RIA) + 0.13 U/mL

Correlation coefficient (r) = 0.88

	Coefficient	95% CI
Intercept	0.127	-1.234 to 1.970
Slope	0.972	0.914 to 1.032

Dilution Recovery

Twenty-three human serum samples in the range of 162.6 to 632.2 U/mL of CA 19-9 were diluted 1:2, 1:4, 1:8, and 1:16 with ADVIA Centaur CA 19-9 diluent and assayed for recovery and parallelism. The recoveries ranged from 76.8 to 129.5% with a mean of 102.7%.

Spiking Recovery

Varying amounts of CA 19-9 were added to five serum samples with endogenous levels of CA 19-9 ranging from 36.0 to 355.2 U/mL. The concentration of CA 19-9 added varied from 23.3 to 233 U/mL. When compared to the expected value, the measured (recovered) levels of CA 19-9 averaged 94.7% with a range of 87.7 to 103.2%.

Sample	Amount Added (U/mL)	Observed (U/mL)	Expected (U/mL)	Recovery %
1	—	36.0		
	23.3	61.2	59.3	103.2
	58.3	87.7	94.3	93.0
	116.5	137.4	152.5	90.1
	233.0	240.9	269.0	89.6
	Mean			94.0
2	—	85.2		
	23.3	103.2	108.5	95.1
	58.3	126.0	143.5	87.8
	116.5	178.9	201.7	88.7
	233.0	290.8	318.2	91.4
	Mean			90.7
3	—	144.5		
	23.3	165.7	167.8	98.7
	58.3	179.1	202.7	88.4
	116.5	250.2	261.0	95.9
	233.0	380.3	377.5	100.8
	Mean			95.9
4	—	216.6		
	23.3	232.4	239.9	96.9
	58.3	268.9	274.9	97.8
	116.5	329.1	333.1	98.8
	233.0	437.9	449.6	97.4
	Mean			97.7
5	—	355.2		
	23.3	377.3	378.5	99.7
	58.3	402.4	413.4	97.3
	116.5	448.9	471.7	95.2
	233.0	516.1	588.2	87.7
	Mean			95.0
Mean				**94.7**

Precision

Five samples were assayed 4 times with two separate lots of reagents, in 2 runs per day, on 2 systems, over a period of 10 days (n = 180 for each sample per reagent lot). The total %CV had a range of 5.5 to 14.5%. The within-run %CV was under 11.3% for all samples. The following results were obtained:

Sample	Mean (U/mL)	Within-run SD	Within-run %CV	Total SD	Total %CV
Control 1	7.2	0.81	11.3	1.04	14.5
Human Serum Pool 1	28.1	1.78	6.3	2.61	9.3
Control 2	65.6	3.03	4.6	4.52	6.9
Human Serum Pool 2	172.4	7.45	4.3	9.52	5.5
Human Serum Pool 3	386.7	17.71	4.6	25.88	6.7

Traceability of Standardization

The ADVIA Centaur CA 19-9 assay is traceable to an internal standard manufactured using highly purified material. Assigned values for calibrators are traceable to this standardization.

Evaluating Results

The following is recommended when you observe poor reproducibility of CA 19-9 values at low levels or if you are not satisfied with assay performance:

- Ensure that the assay reagent and calibrator lot numbers and expiration dates match those entered in the system.
- Ensure that the calibrators, quality control materials, and assay reagents were prepared according to the recommended procedures.
- Ensure that the recommended sample collection and handling procedures were followed.
- Ensure that the recommended system cleaning procedures were followed.
- Ensure that Type II reagent water was used when operating the system.[8]
- Ensure that Wash 1 was used when operating the system.
- Visually check the probe and tubing for obstructions, leaks, and deformities such as pinched or crimped tubing.
- Take further corrective action following established laboratory procedures.
- Calibrate the system using new assay reagents, calibrators, and quality control samples.
- Contact your local technical support provider or distributor for technical assistance.

Technical Assistance

For customer support, contact your local technical support provider or distributor.

www.siemens.com/diagnostics

References

1. Steinberg W. The clinical utility of the CA 19-9 tumor-associated antigen. *Am J Gastroenterol* 1990;85(4): 350–5.
2. Pleskow DK, Berger HJ, Gyves J, et al. Evaluation of a serologic marker, CA 19-9, in the diagnosis of pancreatic cancer. *Ann Intern Med* 1989;110(9):704–9.
3. Willett CG, Dayl WJ, Warshaw AL. CA 19-9 is an index of response to neoadjunctive chemoradiation therapy in pancreatic cancer. *Am J Surg* 1996;172:350–352.
4. Bac DJ, Kok TC, van der Gaast A, Splinter TAW. Evaluation of CA19-9 serum levels for monitoring disease activity during chemotherapy of pancreatic adenocarcinoma. *J Cancer Res Clin. Oncol* 1991; 117:263–265.
5. Klapdor R, Seutter E, Lang-Polckow EM, et al. Locoregional/systemic chemotherapy of locally advanced/ metastasized pancreatic cancer with a combination of mitomycin-C and gemcitabine and simultaneous follow-up by imaging methods and tumor markers. *Anticancer Res* 1999; 19: 2459–2469.
6. Heinemann V, Schermuly M-M, Steiber P, et al. CA19-9: A predictor of response in pancreatic cancer treated with gemcitabine and cisplatin. *Anticancer Res* 1999; 19:2433–2436.
7. Androulakis N, Kourousis C, Dimopoulos MA, et al. Treatment of pancreatic cancer with docetaxel and granulocyte colony-stimulating factor: A multicenter phase II study. *J Clin Oncol* 1999; 17:1779–1785.
8. Reagent Water Technical Bulletin. Siemens Healthcare Diagnostics, 107060.
9. Clinical and Laboratory Standards Institute (formerly NCCLS). *Procedures for the Handling and Processing of Blood Specimens; Approved Guideline - Third Edition.* Wayne, PA: Clinical and Laboratory Standards Institute; 2004. NCCLS Document H18-A3.
10. Centers for Disease Control. Update: Universal precautions for prevention of transmission of human immunodeficiency virus, hepatitis B virus and other bloodborne pathogens in healthcare settings. MMWR 1988;37:377–82, 387–8.

11. Clinical and Laboratory Standards Institute (formerly NCCLS). *Protection of Laboratory Workers From Occupationally Acquired Infections; Approved Guideline - Third Edition.* Wayne, PA: Clinical and Laboratory Standards Institute; 2005. NCCLS Document M29-A3.
12. Federal Occupational Safety and Health Administration, Bloodborne Pathogens Standard, 29 CFR 1910.1030.
13. Boscato LM, Stuart MC. Heterophilic antibodies: a problem for all immunoassays. *Clin Chem* 1988;34:27–33.
14. Clinical and Laboratory Standards Institute (formerly NCCLS). *How to Define and Determine Reference Intervals in the Clinical Laboratory; Approved Guideline - Second Edition.* Wayne, PA: Clinical and Laboratory Standards Institute; 2000. NCCLS Document C28-A2.
15. Clinical and Laboratory Standards Institute (formerly NCCLS). *Interference Testing in Clinical Chemistry; Approved Guideline - Second Edition.* Wayne, PA: Clinical and Laboratory Standards Institute; 2005. CLSI document EP7-A2.

ADVIA Centaur and ReadyPack are trademarks of Siemens Healthcare Diagnostics.

CA 19-9 and Fujirebio Diagnostics are trademarks of Fujirebio Diagnostics, Inc.

© 2010 Siemens Healthcare Diagnostics Inc. All rights reserved.

US Pats 5,609,822; 5,656,426; 5,788,928

Origin: US

Siemens Healthcare Diagnostics Inc.
Tarrytown, NY 10591-5097 USA

EC REP **Siemens Healthcare Diagnostics Ltd.**
Sir William Siemens Sq.
Frimley, Camberley, UK GU16 8QD

Siemens Healthcare
Diagnostics Pty Ltd
885 Mountain Highway
Bayswater Victoria 3153
Australia

シーメンスヘルスケア・
ダイアグノスティクス株式会社
東京都品川区東五反田 3－20－14
Siemens Healthcare Diagnostics
輸入

Carbamazepine (CARB)

CE

Assay Summary

Sample Type	**Serum, Heparinized Plasma, EDTA Plasma**
Sample Volume	**15 µL**
Calibrator	**Z**
Sensitivity and Assay Range	**0.25–18 µg/mL (1.06–76.1 µmol/L)**

Contents

REF	Contents	Number of Tests
05163003	5 ReadyPack® primary reagent packs containing ADVIA Centaur® CARB Lite Reagent and Solid Phase ADVIA Centaur CARB Master Curve card	250
or		
05162724	1 ReadyPack primary reagent pack containing ADVIA Centaur CARB Lite Reagent and Solid Phase ADVIA Centaur CARB Master Curve card	50

For a definition of symbols used in product labeling, refer to *Understanding the Symbols* in Appendix D of the Assay Guide.

Intended Use

For *in vitro* diagnostic use in the quantitative determination of carbamazepine in serum or plasma using the ADVIA Centaur and ADVIA Centaur XP systems.

Materials Required but Not Provided

REF	Description	Contents
05165553	Calibrator Z	6 vials of low calibrator CAL L 6 vials of high calibrator CAL H
or		
05165359	Calibrator Z	2 vials of low calibrator CAL L 2 vials of high calibrator CAL H

Optional Reagents

REF	Description	Contents
04311114 (110317)	ADVIA Centaur Multi-Diluent 5 M-DIL 5	2 ReadyPack ancillary reagent packs containing 5 mL/pack
08839946 (570055)	Multi-Diluent 5 M-DIL 5	20 mL/vial
05166886	CARB Master Curve Material	7 x 1 mL

Summary and Explanation of the Test

Carbamazepine is a derivative of iminostilbene that is used alone or with other anti-epileptic drugs to treat tonic-clonic (grand mal), partial, and partial-complex seizures. It is also used to treat trigeminal neuralgia (tic doloureux).[1-4] Carbamazepine is sometimes used to treat bipolar affective disorders in patients for whom lithium is not effective.[1]

The individual response to carbamazepine varies greatly due to differences in absorption and metabolism. Carbamazepine is highly protein bound, 75 to 80%. It has a half-life of 10 to 20 hours during chronic therapy. Concurrent administration of phenytoin or phenobarbital may reduce the half-life to 9 to 10 hours.[1]

Carbamazepine is metabolized by the liver through the hepatic oxidative enzyme system.[1,2] Its active metabolite is carbamazepine 10,11-epoxide, which can also have therapeutic and toxic effects, especially in children.[1-3] Impaired liver function and administration of drugs such as erythromycin, other macrolides, and propoxyphene can increase carbamazepine concentrations.[1] Phenytoin and phenobarbital can decrease carbamazepine concentrations while increasing concentrations of its active metabolite.[1-4]

Carbamazepine has a narrow therapeutic range of 4 to 10 µg/mL (16.9 to 42.3 µmol/L)[4] although patients also receiving other anticonvulsants may experience toxic effects at concentrations as low as 9 µg/mL (38.1 µmol/L). Adverse effects associated with carbamazepine include drowsiness, vertigo, blurred or double vision, ataxia, gastrointestinal reactions, and increase in frequency of seizures.[1-4] Acute intoxication may be manifested by stupor or coma, hyperirritability, convulsions, and respiratory depression.[1]

Therapeutic drug monitoring of carbamazepine helps the physician to establish the therapeutic dose based on individual response to the drug, to adjust dosage to reduce adverse effects while controlling seizures, and to ensure patient compliance with the established regimen.[1,4]

Assay Principle

The ADVIA Centaur Carbamazepine assay is a competitive immunoassay using direct chemiluminescent technology. Carbamazepine in the patient sample competes with an acridinium ester-labeled carbamazepine derivative in the Lite Reagent for a limited amount of monoclonal mouse anti-carbamazepine antibody, which is coupled to paramagnetic particles in the Solid Phase.

The system automatically performs the following actions:

- Dispenses 15 µL of sample into a cuvette.
- Dispenses 100 µL of Lite Reagent and 400 µL Solid Phase and incubates for 7.5 minutes at 37°C.
- Separates, aspirates, and washes the cuvettes with reagent water.[5]
- Dispenses 300 µL each of Acid Reagent and Base Reagent to initiate the chemiluminescent reaction.
- Reports results according to the selected option, as described in the system operating instructions or in the online help system.

An inverse relationship exists between the amount of carbamazepine present in the patient sample and the amount of relative light units (RLUs) detected by the system.

Specimen Collection and Handling

NOTE: Available literature references present conflicting and complex recommendations on the use of gel barrier tubes for therapeutic drug monitoring samples. Each lab should contact their specific tube manufacturer for additional information and recommendations for therapeutic drug monitoring testing with the ADVIA Centaur systems.

Serum, heparinized plasma, or EDTA plasma are the recommended sample types for this assay.

The effects of anticoagulants on the ADVIA Centaur Carbamazepine assay were evaluated using ten matched donor sets of blood drawn into red top serum, heparin, and EDTA collection tubes. Carbamazepine [at 14 µg/mL (59.2 µmol/L)] was added to each sample and the percent recovery was determined. All samples were run in replicates of six. The percent recovery for heparinized plasma samples and EDTA plasma samples was found to be equivalent to serum samples collected into red top serum collection tubes.

The following recommendations for handling and storing blood samples are furnished by the Clinical and Laboratory Standards Institute (CLSI, formerly NCCLS):[6]

- Collect all blood samples observing universal precautions for venipuncture.
- Allow samples to clot adequately before centrifugation.
- Keep tubes stoppered and upright at all times.
- Do not use samples that have been stored at room temperature for longer than 8 hours.
- Tightly cap and refrigerate specimens at 2 to 8°C if the assay is not completed within 8 hours.
- Freeze samples at or below -20°C if the sample is not assayed within 48 hours.
- Freeze samples only once and mix thoroughly after thawing.

Before placing samples on the system, ensure that samples have the following characteristics:

- Samples are free of fibrin or other particulate matter.
- Samples are free of bubbles.

Reagents

UP Store the reagents upright at 2–8°C.
Mix all primary reagent packs by hand before loading them onto the system. Visually inspect the bottom of the reagent pack to ensure that all particles are dispersed and resuspended. For detailed information about preparing the reagents for use, refer to Appendix C, *Handling Reagents*.

Reagent Pack	Reagent	Volume	Ingredients	Storage	Stability
ADVIA Centaur CARB ReadyPack primary reagent pack	Lite Reagent	5.0 mL/ reagent pack	carbamazepine derivative (~0.26 ng/mL) labeled with acridinium ester in buffered saline with sodium azide (< 0.1%) and preservatives	2–8°C	Until the expiration date on the pack label. For onboard stability, refer to *Onboard Stability and Calibration Interval.*
	Solid Phase	20.0 mL/ reagent pack	monoclonal mouse anti-carbamazepine antibody (~15.25 µg/mL) covalently coupled to paramagnetic particles in buffered saline with sodium azide (< 0.1%) and preservatives	2–8°C	Until the expiration date on the pack label. For onboard stability, refer to *Onboard Stability and Calibration Interval.*
ADVIA Centaur M-DIL 5 ReadyPack ancillary reagent pack	Multi-Diluent 5	5.0 mL/ reagent pack	human plasma with sodium azide (< 0.1%)	2–8°C	Until the expiration date on the pack label or 28 consecutive days after accessing the ancillary reagent pack.

NOTE: Sodium azide can react with copper and lead plumbing to form explosive metal azides. On disposal, flush reagents with a large volume of water to prevent the buildup of azides, if disposal into a drain is in compliance with federal, state, and local requirements.

CAUTION! POTENTIAL BIOHAZARD: Contains human source material. While each human serum or plasma donor unit used in the manufacture of this product was tested by FDA-approved methods and found nonreactive for hepatitis B surface antigen (HBsAg), antibody to hepatitis C (HCV), and antibody to HIV-1/2, all products manufactured using human source material should be handled as potentially infectious. Because no test method can offer complete assurance that hepatitis B or C viruses, HIV, or other infectious agents are absent, these products should be handled according to established good laboratory practices.[7-9]

CAUTION: This device contains material of animal origin and should be handled as a potential carrier and transmitter of disease.

For *in vitro* diagnostic use.

Loading Reagents

Ensure that the system has sufficient primary and ancillary reagent packs. For detailed information about preparing the system, refer to the system operating instructions or to the online help system.

Mix all primary reagent packs by hand before loading them onto the system. Visually inspect the bottom of the reagent pack to ensure that all particles are dispersed and resuspended. For detailed information about preparing the reagents for use, refer to Appendix C, *Handling Reagents*.

Load the ReadyPack reagent packs in the primary reagent area using the arrows as a placement guide. The system automatically mixes the primary reagent packs to maintain homogeneous suspension of the reagents. For detailed information about loading reagents, refer to the system operating instructions or to the online help system.

If automatic dilution of a sample is required, load ADVIA Centaur Multi-Diluent 5 in the ancillary reagent entry.

Onboard Stability and Calibration Interval

Onboard Stability	Calibration Interval
28 days	28 days

Additionally, the ADVIA Centaur Carbamazepine assay requires a two-point calibration:

- when changing lot numbers of primary reagent packs
- when replacing system components
- when quality control results are repeatedly out of range

NOTE:

- Discard the primary reagent packs at the end of the onboard stability interval.
- Do not use reagents beyond the expiration date.

Master Curve Calibration

The ADVIA Centaur Carbamazepine assay requires a Master Curve calibration when using a new lot number of Lite Reagent and Solid Phase. For each new lot number of Lite Reagent and Solid Phase, use the barcode reader or keyboard to enter the Master Curve values on the system. The Master Curve card contains the Master Curve values. For detailed information about entering calibration values, refer to the system operating instructions or to the online help system.

Quality Control

For detailed information about entering quality control values, refer to the system operating instructions or to the online help system.

To monitor system performance and chart trends, as a minimum requirement, two levels of quality control material should be assayed on each day that samples are analyzed. Quality control samples should also be assayed when performing a two-point calibration. Treat all quality control samples the same as patient samples.

Siemens Healthcare Diagnostics recommends the use of commercially available quality control materials with at least 2 levels (low and high). A satisfactory level of performance is achieved when the analyte values obtained are within the Acceptable Control Range for the system or within your range, as determined by an appropriate internal laboratory quality control scheme.

If the quality control results do not fall within the Expected Values or within the laboratory's established values, do not report results. Take the following actions:

- Verify that the materials are not expired.
- Verify that required maintenance was performed.
- Verify that the assay was performed according to the instructions for use.
- Rerun the assay with fresh quality control samples.
- If necessary, contact your local technical support provider or distributor for assistance.

Sample Volume

This assay requires 15 µL of sample for a single determination. This volume does not include the unusable volume in the sample container or the additional volume required when performing duplicates or other tests on the same sample. For detailed information about determining the minimum required volume, refer to *Sample Volume Requirements* in the *ADVIA Centaur Reference Manual.*

NOTE: The sample volume required to perform onboard dilution differs from the sample volume required to perform a single determination. Refer to the following information for the sample volume required to perform onboard dilutions:

Dilution	Sample Volume (µL)
1:2	100

Assay Procedure

For detailed procedural information, refer to the system operating instructions or to the online help system.

Procedural Notes

Calculations

For detailed information about how the system calculates results, refer to the system operating instructions or to the online help system.

The system reports carbamazepine results in µg/mL (common units) or µmol/L (SI units), depending on the units defined when setting up the assay. The conversion formula is 1 µg/mL = 4.23 µmol/L.

Dilutions

- Dilute and retest samples with carbamazepine levels greater than 18 µg/mL (76.1 µmol/L) to obtain accurate results.
- Patient samples can be automatically diluted by the system or prepared manually.
- For automatic dilutions, ensure that ADVIA Centaur Multi-Diluent 5 is loaded and set the system parameters as follows:

  Dilution point: ≤ 18 µg/mL (76.1 µmol/L)

  Dilution factor: 2

  For detailed information about automatic dilutions, refer to the system operating instructions or to the online help system.
- Manually dilute the patient samples when patient results exceed the linearity of the assay using automatic dilution, or when laboratory protocol requires manual dilution.
- Use Multi-Diluent 5 to manually dilute patient samples, and then load the diluted sample in the sample rack, replacing the undiluted sample.
- Ensure that results are mathematically corrected for dilution. If a dilution factor is entered when scheduling the test, the system automatically calculates the result.

Disposal

Dispose of hazardous or biologically contaminated materials according to the practices of your institution. Discard all materials in a safe and acceptable manner, and in compliance with all federal, state, and local requirements.

Limitations

Heterophilic antibodies in human serum can react with reagent immunoglobulins, interfering with *in vitro* immunoassays.[10] Patients routinely exposed to animals or to animal serum products can be prone to this interference and anomalous values may be observed. Additional information may be required for diagnosis.

Serum specimens that are . . .	Demonstrate ≤ 5% change in results up to . . .
hemolyzed	500 mg/dL of hemoglobin
lipemic	1000 mg/dL of triglycerides
icteric	20 mg/dL of bilirubin

Expected Results

A therapeutic range of 4 to 10 µg/mL (16.9 to 42.3 µmol/L) has been previously reported for carbamazepine.[4]

As with all therapeutic drug assays, each laboratory should determine the appropriateness of this range for the diagnostic evaluation of patient results.[11]

Performance Characteristics

Specificity

A pooled serum sample with a carbamazepine level of 8 µg/mL (33.8 µmol/L) was spiked with the compounds listed below to concentrations as shown. ADVIA Centaur Carbamazepine assay results from the spiked samples were compared with those of unspiked control samples and the following results were obtained.

$$\% \text{ cross-reactivity} = \frac{(\text{concentration of spiked sample} - \text{concentration of unspiked sample})}{\text{amount of compound spiked}} \times 100$$

Compound	*Amount Added (µg/mL)*	*% Cross-reactivity*
Amitriptyline	1000	0.1
Amobarbital	100	0.4
Carbamazepine 10,11-epoxide	100	7.3
Chlorazepate	10	1.1
Chlordiazepoxide	20	1.1
Chlorpromazine	100	0.1
Cimetidine	100	0.1
Danazol	120	0.3*
Diazepam	20	0.6
10,11-dihydroxy-10,11-dihydro-carbamazepine	100	0.3
9-hydroxymethyl-10-carbamoylacridan	10	3.9
Diltiazem	50	0.1
Ethosuximide	500	0.1
Ethotoin	250	0.1
Felbamate	800	0.1
Fluoxetine	36	0.4
Fluvoxamine	82	0.8
Glutethimide	60	0.1
10-hydroxy-10,11-dihydro-carbamazepine	100	0.6
Imipramine	100	0.1
Isoniazide	70	0.4
Macrolide antibiotics (erythromycin)	200	0.2
Mephenytoin	250	0.1
Mephobarbital	150	0.1
Methsuximide	75	0.2
Nortriptyline	50	0.1
Oxycarbazepine	100	0.2
Phenobarbital	150	0.1
Phenylbutazone	100	0.4
Phenytoin	500	0.1
p-hydroxy phenobarbital	200	0.1
2-phenyl-2-ethylmalonamide (PEMA)	200	0.1
Primidone	200	0.1
Promethazine	50	0.1
Protriptyline	10	4.7
Propoxyphene	10	3.4
Secobarbital	50	0.4
Theophylline	250	0.1
Valproic acid	1000	0.1
Valpromide	500	0.1
Verapamil	10	2.9
Viloxazine	100	0.1
5(-p-hydroxyphenyl)-5-phenylhydantoin	500	0.1
5-ethyl-5-phenylhydantoin	1000	0.1

Interference testing was determined according to CLSI document EP7-A2.[12]

Sensitivity and Assay Range

The ADVIA Centaur Carbamazepine assay measures carbamazepine concentrations to 18 µg/mL (76.1 µmol/L) with a minimum detectable concentration of 0.25 µg/mL (1.06 µmol/L). Sensitivity is defined as the concentration of carbamazepine that corresponds to the RLUs that are two standard deviations less than the mean RLUs of 20 replicate determinations of the Carbamazepine zero standard.

Method Comparison

For 300 samples in the range of 0.87 to 18.00 µg/mL (3.68 to 76.14 µmol/L), the relationship between the ADVIA Centaur Carbamazepine assay and the ACS:180® Carbamazepine assay is described by the equation:

ADVIA Centaur Carbamazepine = 1.01 (ACS:180 Carbamazepine) + 0.01 µg/mL

Correlation coefficient (r) = 0.98

Dilution Recovery

Five human serum samples in the range of 10.96 to 15.26 µg/mL (46.36 to 64.55 µmol/L) of carbamazepine were diluted 1:2, 1:4, 1:8, and 1:16 with Multi-Diluent 5 and assayed for recovery and parallelism. The recoveries ranged from 81.4 to 123.2% with a mean of 101.6%.

Sample	Dilution	Observed (µg/mL)	Expected (µg/mL)	Observed (µmol/L)	Expected (µmol/L)	Recovery %
1	—	10.96		46.36		
	1:2	5.27	5.48	22.29	23.18	96.3
	1:4	2.86	2.74	12.10	11.59	104.3
	1:8	1.69	1.37	7.15	5.80	123.2
	1:16	0.70	0.68	2.96	2.88	102.0
	Mean					106.4
2	—	11.41		48.26		
	1:2	5.72	5.71	24.20	24.15	100.3
	1:4	3.02	2.85	12.77	12.06	105.9
	1:8	1.42	1.43	6.01	6.05	99.5
	1:16	0.58	0.71	2.45	3.00	81.4
	Mean					96.8
3	—	11.86		50.17		
	1:2	5.60	5.93	23.69	25.08	94.4
	1:4	2.97	2.97	12.56	12.56	100.2
	1:8	1.51	1.48	6.39	6.26	101.9
	1:16	0.81	0.74	3.43	3.13	109.7
	Mean					101.6
4	—	12.36		52.28		
	1:2	6.36	6.18	26.90	26.14	103.0
	1:4	3.51	3.09	14.85	13.07	113.5
	1:8	1.66	1.54	7.02	6.51	107.7
	1:16	0.86	0.77	3.64	3.26	111.9
	Mean					109.0
5	—	15.26		64.55		
	1:2	7.38	7.63	31.22	32.27	96.7
	1:4	3.47	3.82	14.68	16.16	90.8
	1:8	1.75	1.91	7.40	8.08	91.8
	1:16	0.92	0.95	3.89	4.02	97.0
	Mean					94.1
Mean						**101.6**

Spiking Recovery

Varying amounts of carbamazepine were added to six carbamazepine-free normal serum samples. The recoveries ranged from 82.5 to 93.1% with a mean of 87.6%.

Sample	Amount Added (µg/mL)	Observed (µg/mL)	Amount Added (µmol/L)	Observed (µmol/L)	Recovery %
1	—	0.07	—	0.30	
	2	1.78	8.46	7.53	85.5
	5	4.39	21.15	18.57	86.4
	10	9.07	42.30	38.37	90.0
	14	12.68	59.22	53.64	90.1
	18	15.61	76.14	66.03	86.3
	Mean				87.7
2	—	0.17	—	0.72	
	2	1.82	8.46	7.70	82.5
	5	4.60	21.15	19.46	88.6
	10	8.49	42.30	35.91	83.2
	14	12.16	59.22	51.44	85.6
	18	15.62	76.14	66.07	85.8
	Mean				85.1
3	—	0.12	—	0.51	
	2	1.87	8.46	7.91	87.5
	5	4.47	21.15	18.91	87.0
	10	8.70	42.30	36.80	85.8
	14	12.21	59.22	51.65	86.4
	18	15.43	76.14	65.27	85.1
	Mean				86.4
4	—	0.00	—	0.00	
	2	1.74	8.46	7.36	87.0
	5	4.51	21.15	19.08	90.2
	10	8.47	42.30	35.83	84.7
	14	12.77	59.22	54.02	91.2
	18	15.63	76.14	66.11	86.8
	Mean				88.0
5	—	0.00	—	0.00	
	2	1.76	8.46	7.44	88.0
	5	4.50	21.15	19.04	90.0
	10	8.92	42.30	37.73	89.2
	14	12.60	59.22	53.30	90.0
	18	16.23	76.14	68.65	90.2
	Mean				89.5
6	—	0.05	—	0.21	
	2	1.70	8.46	7.19	82.5
	5	4.67	21.15	19.75	92.4
	10	8.98	42.30	37.99	89.3
	14	13.08	59.22	55.33	93.1
	18	16.05	76.14	67.89	88.9
	Mean				89.2
Mean					**87.6**

Precision

Four samples were assayed 6 times in 6 assays, on each of 4 systems (n=144 for each sample), over a period of 3 days. The following results were obtained:

Mean (µg/mL)	Mean (µmol/L)	Within-run % CV	Run-to-run % CV	Total % CV
3.28	13.87	6.96	6.05	9.22
5.79	24.49	7.36	3.58	8.18
9.85	41.67	6.55	5.30	8.43
16.61	70.26	7.55	7.96	10.89

Traceability of Standardization

The ADVIA Centaur Carbamazepine assay standardization is traceable to Standard Reference Materials (SRM 1599) from NIST (National Institute of Standards and Technology) using highly purified Carbamazepine. Assigned values for calibrators are traceable to this standardization.

Technical Assistance

For customer support, contact your local technical support provider or distributor.

www.siemens.com/diagnostics

References

1. McNamara JO. Drugs effective in the treatment of the epilepsies. In: GL Hardman, LL Limbird, PB Molinoff, RW Ruddon, Goodman & Gilman's the pharmacological basis of therapeutics, 9th ed. NY: McGraw-Hill, 1996;461–486.
2. Moyer TP, Pippenger CE. Therapeutic Drug Monitoring. In: Burtis CA, Ashwood ER, eds. Tietz textbook of clinical chemistry, 2nd ed. Philadelphia: WB Sanders, 1994;1094–1154.
3. Drug evaluations annual. American Medical Association, 1995;368–378.
4. Troupin A, Ojemann LM, Halpern L, et al. Carbamazepine: a double-blind comparison with phenytoin. Neurology 1977; 27: 511–9.
5. Reagent Water Technical Bulletin. Siemens Healthcare Diagnostics, 107060.
6. Clinical and Laboratory Standards Institute (formerly NCCLS). Procedures for the handling and processing of blood specimens; approved guideline - third edition. Wayne, PA: Clinical and Laboratory Standards Institute; 2004. NCCLS Document H18-A3.
7. Centers for Disease Control. 1988. Update: Universal precautions for prevention of transmission of human immunodeficiency virus, hepatitis B virus and other bloodborne pathogens in healthcare settings. MMWR, 37:377–382, 387, 388.
8. Clinical and Laboratory Standards Institute (formerly NCCLS). Protection of laboratory workers from occupationally acquired infections; approved guideline - third edition. Wayne, PA: Clinical and Laboratory Standards Institute; 2005. NCCLS Document M29-A3.
9. Federal Occupational Safety and Health Administration, Bloodborne Pathogens Standard, 29 CFR 1910.1030.
10. Boscato LM, Stewart MC. Heterophilic antibodies: a problem for all immunoassays. Clin. Chem. 1988;34:27–33.
11. Clinical and Laboratory Standards Institute (formerly NCCLS). How to define and determine reference intervals in the clinical laboratory; approved guideline - second edition. Wayne, PA: Clinical and Laboratory Standards Institute; 2000. NCCLS Document C28-A2.
12. Clinical and Laboratory Standards Institute (formerly NCCLS). Interference testing in clinical chemistry; approved guideline - second edition. Wayne, PA: Clinical and Laboratory Standards Institute; 2005. NCCLS Document EP7-A2.

ADVIA Centaur, ReadyPack, and ACS:180 are trademarks of Siemens Healthcare Diagnostics.

© 2008 Siemens Healthcare Diagnostics Inc. All rights reserved.

US Pats 5,110,932; 5,241,070; 5,538,901; 5,656,426; 5,609,822; 5,788,928

Origin: US

Siemens Healthcare Diagnostics Inc.
Tarrytown, NY 10591-5097 USA

EC REP Siemens Healthcare Diagnostics Ltd.
Sir William Siemens Sq.
Frimley, Camberley, UK GU16 8QD

Siemens Healthcare
Diagnostics Pty Ltd
885 Mountain Highway
Bayswater Victoria 3153
Australia

シーメンスヘルスケア・
ダイアグノスティクス株式会社
東京都品川区東五反田 3－20－14
Siemens Healthcare Diagnostics
輸入

CEA

CE

Assay Summary

Sample Type	***Serum***
Sample Volume	***50 µL***
Calibrator	***D***
Sensitivity and Assay Range	***0.5–100 ng/mL (µg/L)***

Contents

REF	Contents	Number of Tests
09788458 (110762)	5 ReadyPack® primary reagent packs containing ADVIA Centaur® CEA Lite Reagent and Solid Phase ADVIA Centaur CEA Master Curve card	500
or		
00937450 (110761)	1 ReadyPack primary reagent pack containing ADVIA Centaur CEA Lite Reagent and Solid Phase ADVIA Centaur CEA Master Curve card	100

For a definition of symbols used in product labeling, please refer to *Understanding the Symbols* in Appendix D.

Intended Use

For *in vitro* diagnostic use in the quantitative measurement of carcinoembryonic antigen (CEA) in serum to aid in the management of cancer patients in whom changing concentrations of CEA are observed using the ADVIA Centaur and ADVIA Centaur XP systems.

WARNING: The concentration of CEA in a given specimen, as determined by assays from different manufacturers, can vary due to differences in assay methods and reagent specificity. The results reported by the laboratory to the physician must include the identity of the CEA assay used. Values obtained with different assay methods cannot be used interchangeably. If, in the course of monitoring a patient, the assay method used for determining serial CEA levels is changed, the laboratory must perform additional serial testing to confirm baseline values.

United States federal law restricts this device to sale and distribution by or on the order of a physician, or to a clinical laboratory, and use is restricted to, by, or on the order of a physician.

Materials Required But Not Provided

REF	Description	Contents
00133564 (672183)	Calibrator D	6 vials of low calibrator CAL L 6 vials of high calibrator CAL H
or		
04956492 (672173)	Calibrator D	2 vials of low calibrator CAL L 2 vials of high calibrator CAL H

Optional Reagents

REF	Description	Contents
07584944 (110322)	ADVIA Centaur CEA Diluent DIL	2 ReadyPack ancillary reagent packs containing 5 mL/pack
01989969 (672255)	CEA Diluent DIL	10 mL/vial
672427	CEA Master Curve Material	6 x 1 mL

Summary and Explanation of the Test

Carcinoembryonic antigen is a glycoprotein normally found in embryonic entodermal epithelium. In the mid-1960s, Gold and Freedman isolated CEA from extracts of malignant tissue.[1,2] CEA belongs to a group of tumor markers referred to as oncofetal proteins. Increased serum CEA levels have been detected in persons with primary colorectal cancer[1,2] and in patients with other malignancies including gastrointestinal tract, breast, lung, ovarian, prostatic, liver, and pancreatic cancers.[1-5] Elevated serum CEA levels have also been detected in patients with nonmalignant disease, especially patients who are older or who are smokers.[5,6] CEA levels are not useful in screening the general population for undetected cancers. However, CEA levels provide important information about patient prognosis, recurrence of tumors after surgical removal, and effectiveness of therapy.[1-6]

Serial CEA levels are useful in monitoring the course of disease. CEA levels generally fall to normal or near normal levels within 1 to 4 months after surgical removal of cancerous tissue. A rise in CEA levels may be the first indication of recurrence, and may precede physical signs and symptoms.[2,6,7] Serial CEA levels are also useful in assessing the effectiveness of chemotherapy or radiation treatment. A sustained rise in CEA levels can indicate ineffective therapy or possible metastasis.[1-5, 7]

CEA is a useful tool for monitoring and managing cancer therapy, and provides the clinician with additional information about patient prognosis.

Assay Principle

The ADVIA Centaur CEA assay is a two-site sandwich immunoassay using direct chemiluminometric technology, which uses constant amounts of two antibodies. The first antibody, in the Lite Reagent, is a purified polyclonal rabbit anti-CEA antibody labeled with acridinium ester. The second antibody, in the Solid Phase, is a monoclonal mouse anti-CEA antibody covalently coupled to paramagnetic particles.

The system automatically performs the following steps:

- dispenses 50 µL of sample into a cuvette
- dispenses 50 µL of Lite Reagent and 250 µL of Solid Phase and incubates for 7.5 minutes at 37°C
- separates, aspirates, and washes the cuvettes with reagent water[8]
- dispenses 300 µL each of Acid Reagent and Base Reagent to initiate the chemiluminescent reaction
- reports results according to the selected option, as described in the system operating instructions or in the online help system

Specimen Collection and Handling

Serum is the recommended sample type for this assay.

Plasma samples should not be used because their performance in this assay has not been determined.

The following recommendations for handling and storing blood samples are furnished by the Clinical and Laboratory Standards Institute (CLSI, formerly NCCLS):[9]

- Collect all blood samples observing universal precautions for venipuncture.
- Allow samples to clot adequately before centrifugation.
- Keep tubes stoppered and upright at all times.
- Do not use samples that have been stored at room temperature for longer than 8 hours.

- Tightly cap and refrigerate specimens at 2° to 8°C if the assay is not completed within 8 hours.
- Freeze samples at or below -20°C if the sample is not assayed within 48 hours.
- Freeze samples only once and mix thoroughly after thawing.

Before placing samples on the system ensure that:

- Samples are free of fibrin or other particulate matter. Remove particulates by centrifugation at 1000 x g for 15 to 20 minutes.
- Samples are free of bubbles.

Reagents

Store the reagents upright at 2–8°C.
Mix all primary reagent packs by hand before loading them onto the system. Visually inspect the bottom of the reagent pack to ensure that all particles are dispersed and resuspended. For detailed information about preparing the reagents for use, refer to Appendix C, *Handling Reagents*.

Reagent Pack	Reagent	Volume	Ingredients	Storage	Stability
ADVIA Centaur CEA ReadyPack primary reagent pack	Lite Reagent	5.0 mL/ reagent pack	polyclonal rabbit anti-CEA antibody (~400 ng/mL) labeled with acridinium ester in phosphate buffered saline with protein stabilizers, sodium azide (0.12%), and preservatives	2–8°C	until the expiration date on the pack label. For onboard stability, refer to *Onboard Stability and Calibration Interval.*
	Solid Phase	25.0 mL/ reagent pack	monoclonal mouse anti-CEA antibody (~120 µg/mL) covalently coupled to paramagnetic particles in phosphate buffered saline with protein stabilizers, sodium azide (0.11%), and preservatives	2–8°C	until the expiration date on the pack label. For onboard stability, refer to *Onboard Stability and Calibration Interval.*
ADVIA Centaur CEA DIL ReadyPack ancillary reagent pack	CEA Diluent	5.0 mL/ reagent pack	bicine buffer, gelatin, and BSA with preservatives and sodium azide (0.1%)	2–8°C	until the expiration date on the pack label or 28 consecutive days after accessing the ancillary reagent pack

R22 S28 **Harmful!** Harmful if swallowed. After contact with skin, wash immediately with plenty of soap and water. **Contains:** sodium azide; Lite Reagent, Solid Phase

CAUTION: This device contains material of animal origin and should be handled as a potential carrier and transmitter of disease.

NOTE: Sodium azide can react with copper and lead plumbing to form explosive metal azides. On disposal, flush reagents with a large volume of water to prevent the buildup of azides, if disposal into a drain is in compliance with federal, state, and local requirements.

For *in vitro* diagnostic use.

Loading Reagents

Ensure that the system has sufficient primary and ancillary reagent packs. For detailed information about preparing the system, refer to the system operating instructions or to the online help system.

Use this procedure to mix ADVIA Centaur CEA primary reagent packs that are unpierced.

CAUTION: Do not use this procedure for pierced ADVIA Centaur CEA reagent packs. Discard pierced ADVIA Centaur CEA reagent packs that have been removed from the system.

1. Hold the reagent pack firmly with thumb on one side and fingers on the other side. Shake vigorously for 15 seconds, using a back and forth motion.

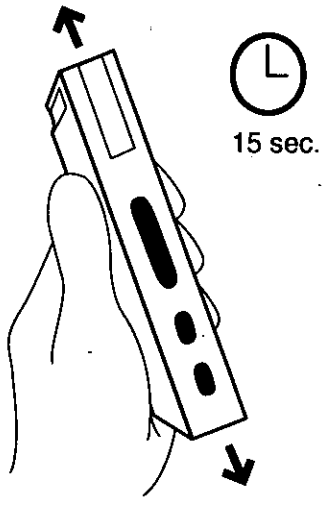

2. Hold the reagent pack firmly at one end, with film side up, and tap sharply on a bench top five times to reduce foaming caused by shaking.

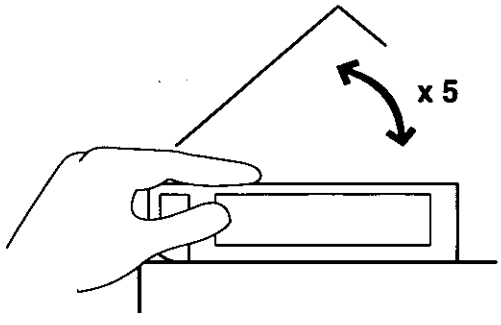

Visually inspect the bottom of the reagent pack to ensure that all particles are dispersed and resuspended.

Load the unpierced ReadyPack reagent packs in the primary reagent area using the arrows as a placement guide. The system automatically mixes the primary reagent packs to maintain homogeneous suspension of the reagents. For detailed information about loading reagents, refer to the system operating instructions or to the online help system.

If automatic dilution of a sample is required, load ADVIA Centaur CEA Diluent in the ancillary reagent entry.

Onboard Stability and Calibration Interval

Onboard Stability	Calibration Interval
14 days	21 days

Additionally, the ADVIA Centaur CEA assay requires a two-point calibration:

- when changing lot numbers of primary reagent packs
- when replacing system components
- when quality control results are repeatedly out of range

CAUTION:

- Discard the primary reagent packs at the end of the onboard stability interval.
- Do not use reagents beyond the expiration date.

Master Curve Calibration

The ADVIA Centaur CEA assay requires a Master Curve calibration when using a new lot number of Lite Reagent and Solid Phase. For each new lot number of Lite Reagent and Solid Phase, use the barcode reader or keyboard to enter the Master Curve values on the system. The Master Curve card contains the Master Curve values. For detailed information about entering calibration values, refer to the system operating instructions or to the online help system.

Quality Control

For detailed information about entering quality control values, refer to the system operating instructions or to the online help system.

To monitor system performance and chart trends, as a minimum requirement, two levels of quality control material should be assayed on each day that samples are analyzed. Quality control samples should also be assayed when performing a two-point calibration. Treat all quality control samples the same as patient samples.

Siemens Healthcare Diagnostics recommends the use of commercially available quality control materials with at least 2 levels (low and high). A satisfactory level of performance is achieved when the analyte values obtained are within the Acceptable Control Range for the system or within your range, as determined by an appropriate internal laboratory quality control scheme.

If the quality control results do not fall within the Expected Values or within the laboratory's established values, do not report results. Take the following actions:

- Verify that the materials are not expired.
- Verify that required maintenance was performed.
- Verify that the assay was performed according to the instructions for use.
- Rerun the assay with fresh quality control samples.
- If necessary, contact your local technical support provider or distributor for assistance.

Sample Volume

This assay requires 50 µL of sample for a single determination. This volume does not include the unusable volume in the sample container or the additional volume required when performing duplicates or other tests on the same sample. For detailed information about determining the minimum required volume, refer to *Sample Volume Requirements* in the *ADVIA Centaur Reference Manual.*

NOTE: The sample volume required to perform onboard dilution differs from the sample volume required to perform a single determination. Refer to the following information for the sample volume required to perform onboard dilutions:

Dilution	Sample Volume (µL)
1:5	40
1:10	40
1:50	40
1:100	40

Assay Procedure

For detailed procedural information, refer to the system operating instructions or to the online help system.

Procedural Notes

Calculations

For detailed information about how the system calculates results, refer to the system operating instructions or to the online help system.

The system reports serum CEA results in ng/mL (mass units) or µg/L (SI units), depending on the units defined when setting up the assay. The conversion formula is 1 ng/mL = 1 µg/L.

Dilutions

- Serum samples with CEA levels greater than 100 ng/mL (µg/L) must be diluted and retested to obtain accurate results.
- Patient samples can be automatically diluted by the system or prepared manually.
- For automatic dilutions, ensure that ADVIA Centaur CEA Diluent is loaded and set the system parameters as follows:

  Dilution point: ≤ 100 ng/mL (µg/L)

  Dilution factor: 5, 10, 50, 100

  For detailed information about automatic dilutions, refer to the system operating instructions or to the online help system.
- Manually dilute the patient samples when patient results exceed the linearity of the assay using automatic dilution, or when laboratory protocol requires manual dilution.
- Use CEA Diluent to manually dilute patient samples, and then load the diluted sample in the sample rack, replacing the undiluted sample.
- Ensure that results are mathematically corrected for dilution. If a dilution factor is entered when scheduling the test, the system automatically calculates the result.

High Dose Hook Effect

Patient samples with high CEA levels can cause a paradoxical decrease in the RLUs (high dose hook effect). In this assay, patient samples with CEA levels as high as 100,000 ng/mL (µg/L) will assay greater than 100 ng/mL (µg/L).

Disposal

Dispose of hazardous and biologically contaminated materials according to the practices of your institution. Discard all materials in a safe and acceptable manner and in compliance with all federal, state, and local requirements.

Limitations

NOTE: Do not interpret levels of CEA as absolute evidence of the presence or the absence of malignant disease. Measurements of CEA should always be used in conjunction with other diagnostic procedures, including information from the patient's clinical evaluation.

The concentration of CEA in a given specimen determined with assays from different manufacturers can vary due to differences in assay methods, calibration, and reagent specificity. CEA determined with different manufacturers' assays will vary depending on the method of standardization and antibody specificity.

WARNING: Do not use the ADVIA Centaur CEA immunoassay as a screening test for diagnosis.

Heterophilic antibodies in human serum can react with reagent immunoglobulins, interfering with *in vitro* immunoassays.[10] Patients routinely exposed to animals or to animal serum products can be prone to this interference and anomalous values may be observed. Additional information may be required for diagnosis.

Serum specimens that are . . .	Demonstrate ≤ 5% change in results up to . . .
hemolyzed	500 mg/dL of hemoglobin
lipemic	1000 mg/dL of triglycerides
icteric	20 mg/dL of bilirubin

Expected Results

The expected results for the ACS:180® CEA assay were previously established. Data was obtained as shown in the following table. Serum samples from healthy subjects and patients with various malignant diseases were analyzed. The cancer patients included in this study represented a variety of disease states from active, progressive malignancy to no clinical evidence of disease. The frequency of positive CEA results was significantly lower in patients with no evidence of active disease compared to those with active disease.

		% Distribution of CEA (ng/mL) (µg/L)				
Clinical Condition	N	0–2.5	2.6–5.0	5.1–10.0	10.1–20	> 20.0
Healthy Subject						
Nonsmokers	225	98.2	1.8	0	0	0
Smokers	150	87.3	8.0	4.7	0	0
Cancerous Diseases						
Colorectal	250	37.6	10.8	7.2	6.4	38.0
Lung	158	46.2	15.8	10.8	7.0	20.2
Breast	221	68.3	14.9	7.7	2.3	6.8
Gastric	35	60.0	17.1	8.6	5.7	8.6
Ovarian	35	82.8	11.4	2.9	2.9	0
Pancreatic	43	44.2	20.9	16.3	7.0	11.6
Liver	6	50.0	16.7	0	33.3	0
Lymphoproliferative	15	80.0	20.0	0	0	0
Other†	41	75.0	10.0	10.0	5.0	0
Nonmalignant Diseases						
Cirrhosis	53	41.5	13.2	32.1	13.2	0
Other benign liver	5	40.0	20.0	0	40.0	0
Ulcerative colitis	11	90.9	9.1	0	0	0
Benign polyps	23	65.2	21.8	13.0	0	0
Colon and intestinal	15	66.7	20.0	0	13.3	0
Gastrointestinal	21	76.2	14.2	0	4.8	4.8
Breast	53	96.2	0	1.9	0	1.9
Kidney and bladder	12	83.4	8.3	0	8.3	0
Lung	29	69.0	24.1	6.9	0	0
Other‡	117	86.3	8.5	4.3	0.9	0

† Other cancers includes bladder, prostate, esophagus, head and neck, sarcoma, and kidney.

‡ Other includes benign uterine, cervical and vaginal, benign ovary, and benign male genital as well as other benign conditions.

These results were confirmed for the ADVIA Centaur CEA assay by analyzing 284 samples in the range of 0.5 to 78.5 ng/mL (µg/L). Refer to *Method Comparison*.

As with all diagnostic assays, each laboratory should determine its own reference range(s) for the diagnostic evaluation of patient results.[11]

Performance Characteristics

Specificity

The potential interference of NCA (normal cross-reacting antigen) and NCA2 was tested by adding these antigens to serum pools containing CEA. The level of CEA was then determined.

Cross-reactant	CEA value without cross-reactant (ng/mL) (µg/L)	CEA value with cross-reactant (ng/mL) (µg/L)
NCA (500 ng/mL)	2.5	2.5
	23.3	21.8
	71.2	66.1
NCA2 (100 ng/mL)	2.5	2.5
	23.3	22.9
	71.2	62.0

NCA and NCA2 showed minimal interference with the recovery of CEA from the serum samples. Average recovery is greater than 95%.

Interference by Chemotherapeutic Agents

The potential interference of chemotherapeutic agents was tested by adding these agents to serum pools containing CEA. The level of CEA in each of these pools was then determined and normalized to the level without the respective drugs.

Substance	Amount Added (µg/mL)	Mean % Recovery (Spike/control x 100)
Vincristine	0.70	100.4
Vinblastine	1.20	99.2
Cisplatinum	1.50	97.9
Tamoxifen	133	98.9
Cyclophosphamide	3300	96.9
5-Fluorouracil	360	96.9
Adriamycin	100	96.9
Folinic Acid	60	98.4
Mitomycin C	60	96.6
Methotrexate	4500	98.7
Bleomycin	1300	100.9

Interference testing was determined according to CLSI Document EP7-A2.[12]

Sensitivity and Assay Range

The ADVIA Centaur CEA assay measures CEA concentrations up to 100 ng/mL (µg/L) with a minimum detectable concentration (sensitivity) of 0.5 ng/mL (µg/L). The sensitivity was determined by diluting low patient specimens with the zero standard. The sensitivity of the assay with a particular patient specimen was taken as the CEA concentration at the point where the dilutions were statistically different from the zero standard and different from the next lower dilution. The assay sensitivity was taken as the average sensitivity determined from diluting seven patient specimens.

Method Comparison

For 284 samples in the range of 0.5 to 78.5 ng/mL (µg/L), the relationship between the ADVIA Centaur CEA assay and the ACS:180 CEA assay is described by the equation:

ADVIA Centaur CEA = 0.97 (ACS:180 CEA) + 0.04 ng/mL

Correlation coefficient (r) = 0.99

Dilution Recovery

Six serum samples in the range of 55.85 to 77.02 ng/mL (µg/L) of CEA were diluted 1:2, 1:4, 1:8, and 1:16 with CEA Diluent and assayed for recovery and parallelism. The recoveries ranged from 79.2% to 110.9% with a mean of 96.8%.

Sample	Dilution	Observed (ng/mL) (µg/L)	Expected (ng/mL) (µg/L)	Recovery %
1	—	55.85		
	1:2	28.36	27.93	101.5
	1:4	13.67	13.96	97.9
	1:8	5.53	6.98	79.2
	1:16	3.00	3.49	86.0
	Mean			91.2
2	—	57.97		
	1:2	28.52	29.98	98.4
	1:4	13.15	14.49	90.7
	1:8	6.42	7.25	88.6
	1:16	3.28	3.62	90.4
	Mean			92.0
3	—	63.68		
	1:2	34.43	31.84	108.1
	1:4	16.25	15.92	102.1
	1:8	8.41	7.96	105.7
	1:16	3.81	3.98	95.8
	Mean			102.9
4	—	77.02		
	1:2	40.43	38.51	105.0
	1:4	18.42	19.25	95.7
	1:8	9.53	9.63	99.0
	1:16	4.83	4.81	100.4
	Mean			100.0
5	—	70.57		
	1:2	39.13	35.29	110.9
	1:4	18.92	17.64	107.2
	1:8	8.27	8.82	93.7
	1:16	4.00	4.41	90.7
	Mean			100.6
6	—	62.74		
	1:2	31.23	31.37	99.6
	1:4	15.26	15.68	97.3
	1:8	7.04	7.84	89.8
	1:16	3.55	3.92	90.6
	Mean			94.3
Mean				**96.8**

Spiking Recovery

Varying amounts of CEA were added to seven serum samples with endogenous CEA levels ranging from 0 to 2.2 ng/mL (µg/L). The amount of CEA that was added varied from 7.0 to 83.0 ng/mL (µg/L). When compared to the expected value, the measured (recovered) values of CEA averaged 100.8% with a range of 75.5% to 135.8%.

Sample	Amount Added (ng/mL) (µg/L)	Observed (ng/mL) (µg/L)	Recovery %
1	—	0.5	
	7.0	6.5	86.6
	13.0	10.2	75.5
	28.0	28.6	100.5
	55.0	53.7	96.8
	83.0	80.5	96.5
	Mean		91.2
2	—	1.6	
	7.0	8.3	97.2
	13.0	16.7	114.7
	28.0	31.3	105.9
	55.0	54.5	96.2
	83.0	81.0	95.8
	Mean		102.0
3	—	0.2	
	7.0	8.5	118.6
	13.0	12.1	91.4
	28.0	31.4	111.3
	55.0	56.1	101.5
	83.0	79.0	94.9
	Mean		103.5
4	—	0.8	
	7.0	7.0	90.0
	13.0	11.1	80.7
	28.0	32.6	113.2
	55.0	56.2	100.8
	83.0	82.0	97.9
	Mean		96.5
5	—	0.6	
	7.0	6.9	91.8
	13.0	18.4	135.8
	28.0	33.1	116.0
	55.0	49.9	89.9
	83.0	104.4	124.9
	Mean		111.7
6	—	0.3	
	7.0	7.0	95.4
	7.0	12.7	95.7
	13.0	31.5	111.2
	28.0	53.3	96.5
	55.0	78.1	93.8
	Mean		98.5
7	—	0.7	
	7.0	7.9	102.2
	13.0	12.2	88.7
	28.0	31.7	110.6
	55.0	60.4	108.5
	83.0	83.6	99.8
	Mean		102.0
Mean			**100.8**

Precision

Four samples were assayed 6 times, in each of 12 runs, on 5 systems, (n = 72 for each sample), over a period of 4 days. The following results were obtained:

Mean (ng/mL) (µg/L)	Within-run % CV	Run-to-run % CV	Total % CV
2.4	3.6	4.1	5.5
14.2	3.3	2.9	4.4
31.5	2.8	4.0	4.8
51.5	2.1	2.7	3.4

Traceability of Standardization

The ADVIA Centaur CEA assay is traceable to an internal standard manufactured using highly purified material. Assigned values for calibrators are traceable to this standardization.

Evaluating Results

The following is recommended when you observe poor reproducibility of CEA values at low levels or if you are not satisfied with assay performance:

- Ensure that the assay reagent and calibrator lot numbers and expiration dates match those entered in the system.
- Ensure that the calibrators, quality control materials, and assay reagents were prepared according to the recommended procedures.
- Ensure that the recommended sample collection and handling procedures were followed.
- Ensure that the recommended system cleaning procedures were followed.
- Ensure that Type II reagent water was used when operating the system.[8]
- Visually check the probe and tubing for obstructions, leaks, and deformities such as pinched or crimped tubing.
- Take further corrective action following established laboratory procedures.
- Calibrate the system using new assay reagents, calibrators, and quality control samples.
- Contact Siemens for technical assistance.

Technical Assistance

For customer support, please contact your local technical support provider or distributor.

www.siemens.com/diagnostics

References

1. Statland BE, Winkel P. Neoplasia. In:Kaplan LA, Pesc AJ, editors. Clinical chemistry; theory, analysis, and correlation. 2nd ed. St. Louis: CV Mosby, 1989. p.734–5.
2. Sikorska H, Shuster J, Gold P. Clinical applications of carcinoembryonic antigen. Cancer Detection and Prevention 1988;12:321–55.
3. Lahousen M, Stettner H, Pickel H, et al. The predictive value of a combination of tumor markers in monitoring patients with ovarian cancer. Cancer 1987;60:2228–32.
4. Go VLW, Zamcheck N. The role of tumor markers in the management of colorectal cancer. Cancer 1982;50:2618–23.
5. McNeely MDD. Gastrointestinal function and digestive disease. In: Kaplan LA, Pesce AJ, editors. Clinical chemistry; theory, analysis, and correlation. 2nd ed. St. Louis: CV Mosby, 1989. p.411–2.
6. Fletcher RH. Carcinoembryonic Antigen. Annals of Internal Medicine 1986;104:66–73.
7. Minton J, Chevinsky AH. CEA directed second-look surgery for colon and rectal cancer. Annales Chirurgiae et Gynecologiae 1989;78:32–7.

8. Reagent Water Technical Bulletin. Siemens Healthcare Diagnostics, 107060.
9. Clinical and Laboratory Standards Institute (formerly NCCLS). *Procedures for the Handling and Processing of Blood Specimens; Approved Guideline - Third Edition.* Wayne, PA: Clinical and Laboratory Standards Institute; 2004. NCCLS Document H18-A3.
10. Boscato LM, Stuart MC. Heterophilic antibodies: a problem for all immunoassays. Clin Chem 1988;34:27–33.
11. Clinical and Laboratory Standards Institute (formerly NCCLS). *How to Define and Determine Reference Intervals in the Clinical Laboratory; Approved Guideline - Second Edition.* Wayne, PA: Clinical and Laboratory Standards Institute; 2000. NCCLS Document C28-A2.
12. Clinical and Laboratory Standards Institute (formerly NCCLS). *Interference Testing in Clinical Chemistry; Approved Guideline - Second Edition.* Wayne, PA: Clinical and Laboratory Standards Institute; 2005. CLSI document EP7-A2.

ADVIA Centaur, ReadyPack, and ACS:180 are trademarks of Siemens Healthcare Diagnostics.

© 2008 Siemens Healthcare Diagnostics Inc. All rights reserved.

US Pats 5,110,932; 5,609,822; 5,788,928

Origin: US

Siemens Healthcare Diagnostics Inc.
Tarrytown, NY 10591-5097 USA

EC REP Siemens Healthcare Diagnostics Ltd.
Sir William Siemens Sq.
Frimley, Camberley, UK GU16 8QD

Siemens Healthcare
Diagnostics Pty Ltd
885 Mountain Highway
Bayswater Victoria 3153
Australia

シーメンスヘルスケア・
ダイアグノスティクス株式会社
東京都品川区東五反田 3－20－14
Siemens Healthcare Diagnostics
輸入

CKMB

CE

Assay Summary

Sample Type	***Serum, Heparinized Plasma***
Sample Volume	***100 µL***
Calibrator	***CKMB***
Sensitivity and Assay Range	***0.18 – 300 ng/mL (0.0023 – 3.75 nmol/L)***

Contents

REF	*Contents*	*Number of Tests*
07516647 (110774)	5 ReadyPack® primary reagent packs containing ADVIA Centaur® CKMB Lite Reagent and Solid Phase ADVIA Centaur CKMB Master Curve card	500
or		
00481201 (110773)	1 ReadyPack primary reagent pack containing ADVIA Centaur CKMB Lite Reagent and Solid Phase ADVIA Centaur CKMB Master Curve card	100

For a definition of symbols used in product labeling, please refer to *Understanding the Symbols* in Appendix D.

Intended Use

For *in vitro* diagnostic use in the quantitative determination of CK-MB in serum or heparinized plasma using the ADVIA Centaur and ADVIA Centaur XP systems.

Materials Required But Not Provided

REF	*Description*	*Contents*
02946856 (672179)	CKMB Calibrator	6 vials of low calibrator CAL L 6 vials of high calibrator CAL H
or		
09318028 (672174)	CKMB Calibrator	2 vials of low calibrator CAL L 2 vials of high calibrator CAL H

Optional Reagents

REF	*Description*	*Contents*
04542396 (110323)	ADVIA Centaur CKMB Diluent DIL	2 ReadyPack ancillary reagent packs containing 5 mL/pack
02116411 (672230)	CKMB Diluent DIL	10 mL/vial
105805	CKMB Master Curve Material	10 x 2 mL

Summary and Explanation of the Test

The enzyme creatine kinase (CK) is a dimer composed of either two B monomers (CK-BB), two M monomers (CK-MM), or the MB hybrid (CK-MB). The isoenzymes have the same molecular weight and catalyze the same reaction, but differ in molecular structure and in their source. CK-MM is found primarily in skeletal muscle and CK-BB originates in the brain tissue and intestinal tract, while the primary source of CK-MB is the myocardium.[1,2]

The quantitation of CK-MB levels in serum is used as an aid in the diagnosis of myocardial injury.[3,4] Elevated CK-MB levels are associated with myocardial cell death and damage due to acute myocardial infarction (AMI).[4] CK-MB levels can be detected as a result of myocardial injury within 3 to 8 hours following the onset of chest pain with peak concentrations being achieved within 12 to 24 hours and usually returning to baseline levels within 24 to 48 hours.[5] CK-MB samples analyzed at the appropriate time intervals can detect this typical rise and fall pattern, which is indicative of myocardial cell damage. Some myocardial infarctions are relatively minor and produce very low quantities of CK-MB. Therefore, it is important to have a sensitive assay that can detect these minor increases in CK-MB levels.

Conditions other than myocardial infarction, especially cardiac surgery[6,7] for coronary bypass, valve replacement, or repair of congenital defects, may cause elevated serum CK-MB levels.[3] However, in these cases, the CK-MB levels do not exhibit the characteristic rise and fall pattern indicative of myocardial infarction.[1] The CK-MB levels of such patients are sometimes monitored to detect myocardial infarction as a complication.[8]

Other conditions may cause elevated CK-MB levels and should be considered when the diagnosis of myocardial infarction is unclear. These conditions include skeletal muscle trauma,[9] dermatomyositis,[10] Duchenne's muscular dystrophy,[11] Reye's syndrome, rhabdomyolysis, drug overdoses, delirium tremens, or chronic alcohol poisoning.

Assay Principle

The ADVIA Centaur CKMB assay is a two-site sandwich immunoassay using direct chemiluminometric technology, which uses constant amounts of two antibodies. The first antibody, in the Lite Reagent, is a monoclonal mouse anti-CK-MB antibody labeled with acridinium ester. The second antibody, in the Solid Phase, is a monoclonal mouse anti-CK-BB antibody, which is covalently coupled to paramagnetic particles.

The system automatically performs the following steps:

- dispenses 100 µL of sample into a cuvette
- dispenses 50 µL of Lite Reagent and incubates for 5.0 minutes at 37°C
- dispenses 225 µL of Solid Phase and incubates for 2.5 minutes at 37°C
- separates, aspirates, and washes the cuvettes with reagent water[12]
- dispenses 300 µL each of Acid Reagent and Base Reagent to initiate the chemiluminescent reaction
- reports results according to the selected option, as described in the system operating instructions or in the online help system

A direct relationship exists between the CK-MB in a sample and the relative light units (RLUs) detected by the system. The ADVIA Centaur CKMB assay measures the immunological activity of CK-MB and reports the concentration in mass units (ng/mL) or SI units (nmol/L).

Specimen Collection and Handling

Serum or heparinized plasma are the recommended sample types for this assay.

Evaluation of heparinized plasma samples may result in up to a +20% bias. It is not recommended that heparinized plasma and serum samples from the same patient be used interchangeably with this assay.

The following recommendations for handling and storing blood samples are furnished by the National Committee for Clinical Laboratory Standards (NCCLS):[13]

- Collect all blood samples observing universal precautions for venipuncture.
- Allow samples to clot adequately before centrifugation.
- Keep tubes stoppered and upright at all times.
- Do not use samples that have been stored at room temperature for longer than 4 hours.
- Tightly cap and refrigerate specimens at 2 to 8°C if the assay is not completed within 4 hours.
- Freeze samples at or below -20°C if the sample is not assayed within 48 hours.
- Freeze samples only once and mix thoroughly after thawing.

Before placing samples on the system ensure that:

- Samples are free of fibrin or other particulate matter.
- Samples are free of bubbles.

Reagents

Store the reagents upright at 2–8°C.
Mix all primary reagent packs by hand before loading them onto the system. Visually inspect the bottom of the reagent pack to ensure that all particles are dispersed and resuspended. For detailed information about preparing the reagents for use, refer to Appendix C, *Handling Reagents*.

Reagent Pack	Reagent	Volume	Ingredients	Storage	Stability
ADVIA Centaur CKMB ReadyPack primary reagent pack	Lite Reagent	5.0 mL/ reagent pack	monoclonal mouse anti-CK-MB antibody (~0.11 µg/mL) labeled with acridinium ester in buffer with sodium azide (0.11%), protein stabilizers, and preservatives	2–8°C	until the expiration date on the pack label. For onboard stability, refer to *Onboard Stability and Calibration Interval.*
	Solid Phase	22.5 mL/ reagent pack	monoclonal mouse anti-CK-BB antibody (~0.06 mg/mL) covalently coupled to paramagnetic particles in buffer with protein stabilizers, sodium azide (0.1%), and preservatives	2–8°C	until the expiration date on the pack label. For onboard stability, refer to *Onboard Stability and Calibration Interval.*
ADVIA Centaur CKMB [ON] ReadyPack ancillary reagent pack	CKMB Diluent	5.0 mL/ reagent pack	equine serum with sodium azide (< 0.1%) and preservatives	2–8°C	until the expiration date on the pack label or 28 consecutive days after accessing the ancillary reagent pack

CAUTION: Sodium azide can react with copper and lead plumbing to form explosive metal azides. On disposal, flush reagents with a large volume of water to prevent the buildup of azides, if disposal into a drain is in compliance with federal, state, and local requirements.

R22 S28 **Harmful!** Harmful if swallowed. After contact with skin, wash immediately with plenty of soap and water. **Contains:** sodium azide; Lite Reagent, Solid Phase

CAUTION: This device contains material of animal origin and should be handled as a potential carrier and transmitter of disease.

For *In Vitro* Diagnostic Use.

Loading Reagents

Ensure that the system has sufficient primary and ancillary reagent packs. For detailed information about preparing the system, refer to the system operating instructions or to the online help system.

CAUTION: Mix all primary reagent packs by hand before loading them onto the system. Visually inspect the bottom of the reagent pack to ensure that all particles are dispersed and resuspended. For detailed information about preparing the reagents for use, refer to Appendix C, *Handling Reagents*.

Load the ReadyPack reagent packs in the primary reagent area using the arrows as a placement guide. The system automatically mixes the primary reagent packs to maintain homogeneous suspension of the reagents. For detailed information about loading reagents, refer to the system operating instructions or to the online help system.

If automatic dilution of a sample is required, load ADVIA Centaur CKMB Diluent in the ancillary reagent entry.

Onboard Stability and Calibration Interval

Onboard Stability	Calibration Interval
28 days	28 days

Additionally, the ADVIA Centaur CKMB assay requires a two-point calibration:

- when changing lot numbers of primary reagent packs
- when replacing system components
- when quality control results are repeatedly out of range

CAUTION:

- Discard the primary reagent packs at the end of the onboard stability interval.
- Do not use reagents beyond the expiration date.

Master Curve Calibration

The ADVIA Centaur CKMB assay requires a Master Curve calibration when using a new lot number of Lite Reagent and Solid Phase. For each new lot number of Lite Reagent and Solid Phase, use the barcode reader or keyboard to enter the Master Curve values on the system. The Master Curve card contains the Master Curve values. For detailed information about entering calibration values, refer to the system operating instructions or to the online help system.

Quality Control

For detailed information about entering quality control values, refer to the system operating instructions or to the online help system.

To monitor system performance and chart trends, as a minimum requirement, two levels of quality control material should be assayed on each day that samples are analyzed. Quality control samples should also be assayed when performing a two-point calibration. Treat all quality control samples the same as patient samples.

Siemens Healthcare Diagnostics recommends the use of commercially available quality control materials with at least 2 levels (low and high). A satisfactory level of performance is achieved when the analyte values obtained are within the Acceptable Control Range for the system or within your range, as determined by an appropriate internal laboratory quality control scheme.

If the quality control results do not fall within the Expected Values or within the laboratory's established values, do not report results. Take the following actions:

- Verify that the materials are not expired.
- Verify that required maintenance was performed.
- Verify that the assay was performed according to the instructions for use.
- Rerun the assay with fresh quality control samples.
- If necessary, contact your local technical support provider or distributor for assistance.

Sample Volume

This assay requires 100 µL of sample for a single determination. This volume does not include the unusable volume in the sample container or the additional volume required when performing duplicates or other tests on the same sample. For detailed information about determining the minimum required volume, refer to *Sample Volume Requirements* in the *ADVIA Centaur Reference Manual.*

Assay Procedure

For detailed procedural information, refer to the system operating instructions or to the online help system.

Procedural Notes

Calculations

For detailed information about how the system calculates results, refer to the system operating instructions or to the online help system.

The system reports serum CK-MB results in ng/mL (mass units) or nmol/L (SI Units), depending on the units defined when setting up the assay. The conversion formula is 1 ng/mL = 0.0125 nmol/L.

Dilutions

- Serum samples with CK-MB levels greater than 300 ng/mL (3.75 nmol/L) must be diluted and retested to obtain accurate results.
- Patient samples can be automatically diluted by the system or prepared manually.

- For automatic dilutions, ensure that ADVIA Centaur CKMB Diluent is loaded and set the system parameters as follows:

  Dilution point: ≤ 300 ng/mL (3.75 nmol/L)

  Dilution factor: 2, 10

  For detailed information about automatic dilutions, refer to the system operating instructions or to the online help system.
- Manually dilute the patient samples when patient results exceed the linearity of the assay using automatic dilution, or when laboratory protocol requires manual dilution.
- Use CKMB Diluent to manually dilute patient samples, and then load the diluted sample in the sample rack, replacing the undiluted sample.
- Ensure that results are mathematically corrected for dilution. If a dilution factor is entered when scheduling the test, the system automatically calculates the result.

High Dose Hook Effect

Patient samples with high CK-MB levels can cause a paradoxical decrease in the RLUs (high dose hook effect). In this assay, patient samples with CK-MB levels as high as 500 ng/mL (6.25 nmol/L) will assay greater than 300 ng/mL (3.75 nmol/L).

Disposal

Dispose of hazardous or biologically contaminated materials according to the practices of your institution. Discard all materials in a safe and acceptable manner, and in compliance with all federal, state, and local requirements.

Limitations

Heterophilic antibodies in human serum can react with reagent immunoglobulins, interfering with *in vitro* immunoassays.[14] Patients routinely exposed to animals or to animal serum products can be prone to this interference and anomalous values may be observed. Additional information may be required for diagnosis.

Serum specimens that are . . .	Have an insignificant effect on the assay up to . . .
hemolyzed	150 mg/dL of hemoglobin
lipemic	1000 mg/dL of triglycerides
icteric	40 mg/dL of bilirubin

Expected Results

The expected results for the ACS:180® CKMB II assay were previously established using serum samples. CK-MB results from 233 apparently healthy individuals gave a median result of 0.78 ng/mL (0.0098 nmol/L).

Serum CK-MB results from 167 hospitalized patients with noncardiac related disorders gave a median result of 1.49 ng/mL (0.0186 nmol/L).

Serum CK-MB results from 42 patients with confirmed myocardial injury ranged up to 144 ng/mL (1.80 nmol/L), with a median result of 25.4 ng/mL (0.3175 nmol/L).

This data was analyzed using Cumulative Distribution analysis, which indicated a CK-MB value of > 5.0 ng/mL (0.0625 nmol/L) is highly suggestive of myocardial infarction. However, using the Relative Index (RI) in addition to the actual CK-MB level can help in differentiating elevated CK-MB from noncardiac and cardiac tissue sources (refer to *Interpretation of Results*).

These results were confimed for the ADVIA Centaur CKMB assay by analyzing 230 serum samples in the range of 0.21 to 268.82 ng/mL (0.00 to 3.36 nmol/L). Refer to *Method Comparison.*

As with all diagnostic assays, each laboratory should determine its own reference range(s) for the diagnostic evaluation of patient results.[15]

Interpretation of Results

Serial sampling at the appropriate time intervals will result in the typical rise and fall pattern of CK-MB levels in patients experiencing myocardial infarction. Elevated CK-MB levels may be related to non-AMI events such as congestive heart failure, strenuous exercise, or trauma. These events should be considered when interpreting CK-MB results. The use of the ratio of CK-MB concentration to total CK concentration can assist in differentiating cardiac and noncardiac sources and is defined as follows:

$$RI = \frac{\text{ADVIA Centaur CKMB (ng/mL)}}{\text{Total CK Activity (U/L)}} \times 100$$

RI is analogous to the % CK-MB calculation obtained by electrophoresis.

Due to differences in testing apparatus for total CK, location, and patient populations, each laboratory should establish its own reference range(s) for the diagnostic evaluation of patient results.

Performance Characteristics

Specificity

The cross-reactivity of the ADVIA Centaur CKMB assay with CK-MM and CK-BB was determined by adding these isoenzymes to samples containing CK-MB. The CK-MB level in the samples was then determined.

	CK-MB value without cross-reactant		CK-MB value with cross-reactant	
Cross-reactant	(ng/mL)	(nmol/L)	(ng/mL)	(nmol/L)
CK-MM; 5000 ng/mL	3.82	0.048	3.86	0.048
	4.32	0.054	4.33	0.054
	3.26	0.041	3.34	0.042
	3.34	0.042	3.43	0.043
	3.76	0.047	3.86	0.048
CK-BB; 1000 ng/mL	3.86	0.048	3.84	0.048
	4.28	0.054	4.27	0.053
	3.30	0.041	3.24	0.041
	3.37	0.042	3.31	0.041
	3.81	0.048	3.79	0.047

Interference testing was determined according to NCCLS Document EP7-P.[16]

Sensitivity and Assay Range

The ADVIA Centaur CKMB assay measures CK-MB concentrations up to 300 ng/mL (3.75 nmol/L) with a minimum detectable concentration (analytical sensitivity) of 0.18 ng/mL (0.0023 nmol/L). Analytical sensitivity is defined as the concentration of CK-MB that corresponds to the RLUs that are two standard deviations greater than the mean RLUs of 20 replicate determinations of the CK-MB zero standard.

Method Comparison

For 230 samples in the range of 0.21 to 268.82 ng/mL (0.00 to 3.36 nmol/L), the relationship between the ADVIA Centaur CKMB assay and the ACS:180 CKMB II assay is described by the equation:

ADVIA Centaur CKMB = 1.03 (ACS:180 CKMB II) – 0.1 ng/mL

Correlation coefficient (r) = 0.99

Dilution Recovery

Four human serum samples in the range of 210.03 to 246.54 ng/mL (2.63 to 3.08 nmol/L) of CK-MB were diluted 1:2, 1:4, 1:8, and 1:16 with CKMB Diluent and assayed for recovery and parallelism. The recoveries ranged from 74.8% to 87.1% with a mean of 80.6%.

Sample	Dilution	Observed (ng/mL)	Expected (ng/mL)	Observed (nmol/L)	Expected (nmol/L)	Recovery %
1	—	246.54		3.08		
	1:2	106.77	123.27	1.33	1.54	86.6
	1:4	51.80	61.63	0.65	0.77	84.1
	1:8	24.39	30.82	0.30	0.39	79.1
	1:16	12.47	15.41	0.16	0.19	81.0
	Mean					82.7
2	—	210.03		2.63		
	1:2	90.06	105.02	1.13	1.31	85.8
	1:4	41.82	52.51	0.52	0.66	79.7
	1:8	20.37	26.25	0.25	0.33	77.6
	1:16	9.81	13.13	0.12	0.16	74.8
	Mean					79.5
3	—	216.59		2.71		
	1:2	94.29	108.30	1.18	1.35	87.1
	1:4	43.44	54.15	0.54	0.68	80.2
	1:8	21.50	27.07	0.27	0.34	79.4
	1:16	10.86	13.54	0.14	0.17	80.2
	Mean					81.7
4	—	227.94		2.85		
	1:2	95.78	113.97	1.20	1.42	84.0
	1:4	44.40	56.98	0.56	0.71	77.9
	1:8	21.60	28.49	0.27	0.36	75.8
	1:16	10.81	14.25	0.14	0.18	75.9
	Mean					78.4
Mean						**80.6**

Spiking Recovery

Varying amounts of CK-MB were added to six samples with endogenous CK-MB levels of 6.84 to 10.42 ng/mL (0.0855 to 0.1303 nmol/L). The recoveries ranged from 89.5% to 111.4% with a mean of 103.1%.

Sample	Amount Added (ng/mL)	Observed (ng/mL)	Amount Added (nmol/L)	Observed (nmol/L)	Recovery %
1	—	7.60	—	0.0950	
	10.22	16.81	0.1278	0.2101	90.1
	43.53	54.21	0.5441	0.6776	107.1
	107.50	126.26	1.3438	1.5783	110.4
	214.74	246.91	2.6843	3.0864	111.4
	471.22	514.93	5.8903	6.4366	107.7
	Mean				105.3
2	—	7.81	—	0.0976	
	10.22	17.79	0.1278	0.2224	97.7
	43.53	52.08	0.5441	0.6510	101.7
	107.50	123.35	1.3438	1.5419	107.5
	214.74	236.84	2.6843	2.9605	106.7
	471.22	480.89	5.8903	6.0111	100.4
	Mean				102.8
3	—	6.95	—	0.0869	
	10.22	16.77	0.1278	0.2096	96.1
	43.53	52.63	0.5441	0.6579	104.9
	107.50	121.54	1.3438	1.5193	106.6
	214.74	235.90	2.6843	2.9488	106.6
	471.22	502.53	5.8903	6.2816	105.2
	Mean				103.9
4	—	7.85	—	0.0981	
	10.82	18.25	0.1353	0.2281	96.1
	44.66	54.33	0.5583	0.6791	104.1
	114.43	127.25	1.4304	1.5906	104.3
	225.98	245.80	2.8248	3.0725	105.3
	507.26	517.33	6.3408	6.4666	100.4
	Mean				102.1
5	—	10.42	—	0.1303	
	10.82	22.18	0.1353	0.2773	108.7
	44.66	58.17	0.5583	0.7271	106.9
	114.43	131.28	1.4304	1.6410	105.6
	225.98	258.44	2.8248	3.2305	109.8
	507.26	531.94	6.3408	6.6493	102.8
	Mean				106.8
6	—	6.84	—	0.0855	
	10.82	16.52	0.1353	0.2065	89.5
	44.66	50.91	0.5583	0.6364	98.7
	114.43	120.90	1.4304	1.5113	99.7
	225.98	237.05	2.8248	2.9631	101.9
	507.26	509.22	6.3408	6.3653	99.0
	Mean				97.8
Mean					**103.1**

Precision

Four samples were assayed 6 times, in each of 24 runs, on 6 systems, (n = 144 for each sample), over a period of 2 days. The following results were obtained:

Mean (ng/mL)	Mean (nmol/L)	Within-run% CV	Run-to-run% CV	Total % CV
3.55	0.0444	2.55	2.96	3.91
28.30	0.3538	2.27	2.89	3.67
80.16	1.0020	2.36	2.81	3.67
114.65	1.4331	2.60	3.55	4.41

Traceability of Standardization

The ADVIA Centaur CKMB assay is traceable to an internal standard manufactured using highly purified material. Assigned values for calibrators are traceable to this standardization.

Technical Assistance

For customer support, please contact your local technical support provider or distributor.

www.siemens.com/diagnostics

References

1. Chapman JF, Silverman LM. Cardiac disease and hypertension. In: Kaplan LA, Pesce AJ, editors. Clinical chemistry: theory, analysis, and correlation. 2nd ed. St. Louis: CV Mosby, 1989. p.415–26.
2. Moss DW, Henderson AR, Kachmar JF. Enzymes. In: Tietz NW, editor. Fundamentals of clinical chemistry. 3rd ed. Philadelphia: WB Saunders, 1987. p.346–421.
3. BLOMACS Study Group. Early diagnosis and exclusion of acute myocardial infarction using biochemical monitoring. Coronary Artery Disease 1995 Apr;6:4.
4. Mair J, Arther DE, Dienstl A, et al. Early detection of acute myocardial infarction by measurement of mass concentration of creatine kinase-MB. Am J Cardiol 1991;68:1545–50.
5. Apple FS. Acute myocardial infarction and coronary reperfusion. Serum cardiac markers for the 1990s. Am J Clin Pathol 1992;97(2):217–26.
6. Abdelmeguid AE, Whitlow PL, Sapp SK, et al. Long-term outcome of transient, uncomplicated in-laboratory coronary artery closure. Circulation 1995;91(11):2733–41.
7. Chapman JF, Silverman LM. Creatine kinase in the diagnosis of myocardial disease. Bull Lab Med (NCMH), 1982;60:1–7.
8. Silverman LM, Chapman JF, Daasch VN. Isoenzymes. In: Kaplan LA, Pesce AJ, editors. Clinical chemistry: theory, analysis, and correlation. 2nd ed. St. Louis: CV Mosby, 1989. p.787–94.
9. Wa AH, Wang XM, Gornet TG, et al. Creatine kinase MB isoforms in patients with skeletal muscle injury: ramifications for early detection of acute myocardial infarction. Clin Chem 1992;38:396–400.
10. Larca LJ, Coppola JT, Honig S. Creatine kinase MB isoenzyme in dermatomyositis: A non cardiac source. Ann Int Med, 1981;94:341–3.
11. Yasmineh WG, Ibrahim GA, Abbasnezhad M, et al. Isoenzyme distribution of creatine kinase and lactate dehydrogenase in serum and skeletal muscle in Duchenne muscular dystrophy, collagen disease, and other muscular disorders. Clin Chem 1978;24:1985–9.
12. Reagent Water Technical Bulletin. Siemens Healthcare Diagnostics, 107060.
13. National Committee for Clinical Laboratory Standards. Procedures for the handling and processing of blood specimens; second edition; approved guideline. NCCLS Document H18-A2; Wayne (PA): NCCLS; 1999 Oct. 40p.
14. Boscato LM, Stuart MC. Heterophilic antibodies: a problem for all immunoassays. Clin Chem 1988;34:27–33.
15. National Committee for Clinical Laboratory Standards. How to define, determine, and utilize reference intervals in the clinical laboratory; approved guideline. NCCLS Document C28-A. Wayne (PA): NCCLS; 1995 June 59p.
16. National Committee for Clinical Laboratory Standards. Interference testing in clinical chemistry. Proposed Guideline. NCCLS document EP7-P. Wayne (PA):NCCLS;1986.

ADVIA Centaur, ReadyPack, and ACS:180 are trademarks of Siemens Healthcare Diagnostics.

© 2008 Siemens Healthcare Diagnostics Inc. All rights reserved.

US Pats 4,745,181; 4,918,192; 5,110,932; 5,609,822; 5,788,928

Origin: US

Siemens Healthcare Diagnostics Inc.
Tarrytown, NY 10591-5097 USA

EC REP Siemens Healthcare Diagnostics Ltd.
Sir William Siemens Sq.
Frimley, Camberley, UK GU16 8QD

Siemens Healthcare
Diagnostics Pty Ltd
885 Mountain Highway
Bayswater Victoria 3153
Australia

シーメンスヘルスケア・
ダイアグノスティクス株式会社
東京都品川区東五反田3－20－14
Siemens Healthcare Diagnostics
輸入

Cortisol (COR)

CE

Assay Summary

Sample Type	***Serum, Urine***
Sample Volume	***20 µL***
Calibrator	***E***
Sensitivity and Assay Range	***0.20–75 µg/dL (5.5–2069 nmol/L)***

Contents

REF	Contents	Number of Tests
04610138	5 ReadyPack® primary reagent packs containing ADVIA Centaur® COR Lite Reagent and Solid Phase ADVIA Centaur COR Master Curve card	250
or		
04610049	1 ReadyPack primary reagent pack containing ADVIA Centaur COR Lite Reagent and Solid Phase ADVIA Centaur COR Master Curve card	50

For a definition of symbols used in product labeling, refer to *Understanding the Symbols* in Appendix D.

Intended Use

For *in vitro* diagnostic use in the quantitative determination of cortisol in serum or urine using the ADVIA Centaur and ADVIA Centaur XP systems.

Materials Required but Not Provided

REF	Description	Contents
04634762	Calibrator E	6 vials of low calibrator CAL L 6 vials of high calibrator CAL H
or		
04634452	Calibrator E	2 vials of low calibrator CAL L 2 vials of high calibrator CAL H

Optional Reagents

REF	Description	Contents
05389133 (110315)	ADVIA Centaur Multi-Diluent 3 M-DIL 3	2 ReadyPack ancillary reagent packs containing 5 mL/pack
06223468 (672192)	Multi-Diluent 3 M-DIL 3	50 mL/vial
04639454	COR Master Curve Material	7 x 1 mL
03071551 570408	Urine Reconstitution Buffer RECON BUF	50mL/vial

Summary and Explanation of the Test

Cortisol is the primary glucocorticoid hormone synthesized and secreted by the adrenal cortex. Cortisol is essential for life, regulating carbohydrate, protein, and lipid metabolism, maintaining normal blood pressure, and inhibiting allergic and inflammatory reactions.[1] Cortisol is synthesized and secreted by the cortex of the adrenal gland under the direction of adrenocorticotropic hormone (ACTH). ACTH is secreted in a circadian pattern by the anterior lobe of the pituitary gland in response to corticotropin releasing hormone (CRH) secretion by the hypothalamus. Increased ACTH levels stimulate cortisol secretion. The increased cortisol levels inhibit CRH secretion, which subsequently inhibits ACTH secretion. This negative feedback mechanism results in decreased cortisol levels.[2]

Circulating cortisol levels follow a diurnal pattern in healthy individuals. Levels are highest in the morning after waking and lowest in the evening. Disorders of the hypothalamic-pituitary-adrenal axis override this diurnal pattern. Decreased cortisol levels are induced by either primary or secondary adrenal insufficiency.[3] Addison's disease is caused by primary adrenal insufficiency due to metabolic errors or destruction of the adrenal cortex. Secondary adrenal insufficiency is caused by pituitary destruction or failure, resulting in loss of ACTH stimulation of the adrenal gland. Cushing's syndrome is caused by increased levels of cortisol due to either primary or secondary adrenal hyperfunction.[4] Causes of primary adrenal hyperfunction are adrenal tumors and nodular adrenal hyperplasia. Secondary adrenal hyperfunction is caused by pituitary overproduction of ACTH or ectopic production of ACTH by a tumor. Increased cortisol levels are induced by pregnancy and by stress due to depression, trauma, surgery, hypoglycemia, alcoholism, uncontrolled diabetes, and starvation.

Due to the diurnal pattern of secretion, an assessment of serum cortisol levels at a single timepoint is of little diagnostic value. Cortisol is often measured in combination with dynamic function testing.[2-4] These tests provide diagnostic tools to determine the etiology of glucocorticoid reserve or excess. The ACTH stimulation test is used to evaluate Addison's disease. The dexamethasone suppression test is used to diagnose Cushing's syndrome or depression due to neuroendocrine disorders.

A 24-hour urinary cortisol measurement is the method of choice in the initial screening for Cushing's syndrome because it provides the best assessment of cortisol production. Urinary cortisol is not subject to the diurnal pattern of secretion and accurately differentiates healthy persons from patients with Cushing's syndrome.[4]

Assay Principle

The ADVIA Centaur Cortisol assay is a competitive immunoassay using direct chemiluminescent technology. Cortisol in the patient sample competes with acridinium ester-labeled cortisol in the Lite Reagent for binding to polyclonal rabbit anti-cortisol antibody in the Solid Phase. The polyclonal rabbit anti-cortisol antibody is bound to monoclonal mouse anti-rabbit antibody, which is covalently coupled to paramagnetic particles in the Solid Phase.

The system automatically performs the following actions:

- Dispenses 20 µL of sample into a cuvette.
- Dispenses 50 µL of Lite Reagent and 250 µL of Solid Phase and incubates for 5.0 minutes at 37°C.
- Separates, aspirates, and washes the cuvettes with reagent water.[5]
- Dispenses 300 µL each of Acid Reagent and Base Reagent to initiate the chemiluminescent reaction.
- Reports results according to the selected option, as described in the system operating instructions or in the online help system.

An inverse relationship exists between the amount of cortisol present in the patient sample and the amount of relative light units (RLUs) detected by the system.

Specimen Collection and Handling

Either serum or urine samples can be used for this assay.

The following recommendations for handling and storing blood samples are furnished by the Clinical and Laboratory Standards Institute (CLSI, formerly NCCLS):[6]

- Collect all blood samples observing universal precautions for venipuncture.
- Allow samples to clot adequately before centrifugation.
- Keep tubes stoppered and upright at all times.
- Do not use samples that have been stored at room temperature for longer than 8 hours.
- Tightly cap and refrigerate specimens at 2° to 8°C if the assay is not completed within 8 hours.
- Freeze samples at or below -20°C if the sample is not assayed within 48 hours.
- Freeze samples only once and mix thoroughly after thawing.

Before placing samples on the system, ensure that samples have the following characteristics:

- Samples are free of fibrin or other particulate matter.
- Samples are free of bubbles.

Direct Urine

- Collect urine into a clean container that has either no preservative or 10 grams of boric acid per liter of urine.
- Tightly cap and refrigerate specimens at 2° to 8°C if the assay is not completed within 8 hours.
- If the assay is not completed within 48 hours, freeze samples at or below -20°C.
- Freeze samples only once and mix thoroughly after thawing. Urine specimens can remain frozen for up to 1 month in non-frost free freezers.

Before placing samples on the system, ensure that samples have the following characteristics:

- Samples are free of particulate matter.
- Samples are free of bubbles.

Urine samples with particulate matter may require centrifugation before use.

Reagents

Store the reagents upright at 2–8°C.
Mix all primary reagent packs by hand before loading them onto the system. Visually inspect the bottom of the reagent pack to ensure that all particles are dispersed and resuspended. For detailed information about preparing the reagents for use, refer to Appendix C, *Handling Reagents*.

Reagent Pack	Reagent	Volume	Ingredients	Storage	Stability
ADVIA Centaur COR ReadyPack primary reagent pack	Lite Reagent	2.5 mL/ reagent pack	cortisol (~1.7 ng/mL) labeled with acridinium ester in buffered saline with sodium salicylate (~50 mg/mL), sodium azide (0.1%) and preservatives	2–8°C	Until the expiration date on the pack label. For onboard stability, refer to *Onboard Stability and Calibration Interval.*
	Solid Phase	12.5 mL/ reagent pack	rabbit anti-cortisol antibody (~1.1 µg/mL) bound to monoclonal mouse anti-rabbit IgG antibody (~56 µg/mL) covalently coupled to paramagnetic particles in buffered saline with sodium azide (0.1%) and preservatives	2–8°C	Until the expiration date on the pack label. For onboard stability, refer to *Onboard Stability and Calibration Interval.*
ADVIA Centaur [AA-CTL] [3] ReadyPack ancillary reagent pack	Multi-Diluent 3	5.0 mL/ reagent pack	human plasma with sodium azide (0.1%)	2–8°C	Until the expiration date on the pack label or 28 consecutive days after accessing the ancillary reagent pack.

R22 S28 **Harmful!** Harmful if swallowed. After contact with skin, wash immediately with plenty of soap and water. **Contains:** sodium azide; Lite Reagent, Solid Phase

CAUTION! POTENTIAL BIOHAZARD: Contains human source material. While each human serum or plasma donor unit used in the manufacture of this product was tested by FDA-approved methods and found nonreactive for hepatitis B surface antigen (HBsAg), antibody to hepatitis C (HCV), and antibody to HIV-1/2, all products manufactured using human source material should be handled as potentially infectious. Because no test method can offer complete assurance that hepatitis B or C viruses, HIV, or other infectious agents are absent, these products should be handled according to established good laboratory practices.[7-9]

CAUTION: This device contains material of animal origin and should be handled as a potential carrier and transmitter of disease.

NOTE: Sodium azide can react with copper and lead plumbing to form explosive metal azides. On disposal, flush reagents with a large volume of water to prevent the buildup of azides, if disposal into a drain is in compliance with federal, state, and local requirements.

For *in vitro* diagnostic use.

Loading Reagents

Ensure that the system has sufficient primary and ancillary reagent packs. For detailed information about preparing the system, refer to the system operating instructions or to the online help system.

Mix all primary reagent packs by hand before loading them onto the system. Visually inspect the bottom of the reagent pack to ensure that all particles are dispersed and resuspended. For detailed information about preparing the reagents for use, refer to Appendix C, *Handling Reagents*.

Load the ReadyPack reagent packs in the primary reagent area using the arrows as a placement guide. The system automatically mixes the primary reagent packs to maintain homogeneous suspension of the reagents. For detailed information about loading reagents, refer to the system operating instructions or to the online help system.

169

If automatic dilution of a sample is required, load ADVIA Centaur Multi-Diluent 3 in the ancillary reagent entry.

Onboard Stability and Calibration Interval

Onboard Stability	Calibration Interval
7 days	10 days

Additionally, the ADVIA Centaur Cortisol assay requires a two-point calibration:

- when changing lot numbers of primary reagent packs
- when replacing system components
- when quality control results are repeatedly out of range

NOTE:

- Discard the primary reagent packs at the end of the onboard stability interval.
- Do not use reagents beyond the expiration date.

Master Curve Calibration

The ADVIA Centaur Cortisol assay requires a Master Curve calibration when using a new lot number of Lite Reagent and Solid Phase. For each new lot number of Lite Reagent and Solid Phase, use the barcode reader or keyboard to enter the Master Curve values on the system. The Master Curve card contains the Master Curve values. For detailed information about entering calibration values, refer to the system operating instructions or to the online help system.

Quality Control

For detailed information about entering quality control values, refer to the system operating instructions or to the online help system.

To monitor system performance and chart trends, as a minimum requirement, assay two levels of quality control material on each day that samples are analyzed. Assay quality control samples when performing a two-point calibration. Treat all quality control samples the same as patient samples.

Siemens Healthcare Diagnostics recommends the use of commercially available quality control materials with at least 2 levels (low and high). A satisfactory level of performance is achieved when the analyte values obtained are within the Acceptable Control Range for the system or within your range, as determined by an appropriate internal laboratory quality control scheme.

If the quality control results do not fall within the Expected Values or within the laboratory's established values, do not report results. Take the following actions:

- Verify that the materials are not expired.
- Verify that required maintenance was performed.
- Verify that the assay was performed according to the instructions for use.
- Rerun the assay with fresh quality control samples.
- If necessary, contact your local technical support provider or distributor for assistance.

Sample Volume

This assay requires 20 µL of sample for a single determination. This volume does not include the unusable volume in the sample container or the additional volume required when performing duplicates or other tests on the same sample. For detailed information about determining the minimum required volume, refer to *Sample Volume Requirements* in the *ADVIA Centaur Reference Manual.*

NOTE: The sample volume required to perform onboard dilution differs from the sample volume required to perform a single determination. Refer to the following information for the sample volume required to perform onboard dilutions:

Dilution	Sample Volume (µL)
1:2	100

Assay Procedure

For detailed procedural information, refer to the system operating instructions or to the online help system.

Procedural Notes

Calculations

For detailed information about how the system calculates results, refer to the system operating instructions or to the online help system.

Serum

The system reports serum cortisol results in µg/dL (common units) or nmol/L (SI units), depending on the units defined when setting up the assay. The conversion formula is 1 µg/dL = 27.59 nmol/L.

Direct Urine

Convert the results of the direct urine sample, provided by the system in µg/dL, to µg/24 hours, using the following equation:

Direct Urinary Cortisol (µg/24 hours) = ADVIA Centaur result (µg/dL) x 10 x V

where V = volume of urine in liters excreted per 24 hours

To convert from µg/24 hours (common units) to nmol/24 hours (SI units), use the following formula:

1 µg/24 hours = 2.76 nmol/24 hours

Dilutions

- Dilute and retest serum samples with cortisol levels greater than 75 µg/dL (2069 nmol/L) to obtain accurate results.
- The system can automatically dilute serum samples, or you can prepare dilutions manually.
- For automatic dilutions, ensure that ADVIA Centaur Multi-Diluent 3 is loaded and set the system parameters as follows:

  Dilution point: ≤ 75 µg/dL (2069 nmol/L)

  Dilution factor: 2

  For detailed information about automatic dilutions, refer to the system operating instructions or to the online help system.

- Manually dilute the patient samples when patient results exceed the linearity of the assay using automatic dilution, or when laboratory protocol requires manual dilution.
- Use Multi-Diluent 3 to manually dilute patient samples, and then load the diluted sample in the sample rack, replacing the undiluted sample.
- Ensure that results are mathematically corrected for dilution. If a dilution factor is entered when scheduling the test, the system automatically calculates the result.

Disposal

Dispose of hazardous or biologically contaminated materials according to the practices of your institution. Discard all materials in a safe and acceptable manner, and in,compliance with all federal, state, and local requirements.

Limitations

Circulating cortisol results from patients receiving Prednisolone or Prednisone (which is converted to Prednisolone *in vivo*) therapy may be falsely elevated. Exercise caution with cortisol determinations for patients undergoing therapy with these and structurally related synthetic corticosteroids.

Heterophilic antibodies in human serum can react with reagent immunoglobulins, interfering with *in vitro* immunoassays.[10] Patients routinely exposed to animals or to animal serum products can be prone to this interference and anomalous values may be observed. Additional information may be required for diagnosis.

Serum specimens that are . . .	Have an insignificant effect on the assay up to . . .
hemolyzed	500 mg/dL of hemoglobin
lipemic	1170 mg/dL of triglycerides
icteric	20 mg/dL of bilirubin

The following substances, at the levels indicated, caused no significant interference in urinary cortisol measurement.

Substance	Concentration
protein	60 mg/dL
sodium chloride	750 mmol/L
urea	350 mmol/L
creatinine	5 mmol/L
glucose	2 mmol/L

The performance of the ADVIA Centaur systems Cortisol assay has not been established with neonatal specimens.

Expected Results

The expected results for the ACS:180® Cortisol assay were previously established. Data was obtained on serum samples from 249 apparently healthy individuals. Based on a central 95% interval, the following reference ranges were established:

Sample Category	N	Cortisol Range (µg/dL)	Cortisol Range (nmol/L)
A.M. serum (7–9 A.M.)	125	4.30–22.40	118.6–618.0
P.M. serum (3–5 P.M.)	124	3.09–16.66	85.30–459.6

These results were confirmed for the ADVIA Centaur Cortisol assay by analyzing 394 serum samples in the range of 0.49 to 58.76 µg/dL (13.52 to 1621.24 nmol/L). Refer to *Method Comparison.*

A study was performed using the ADVIA Centaur system on 105 direct urine samples from apparently healthy males and females. Based on this population, the 95% reference interval for these samples is shown below:

Sample Category	N	Cortisol Range (µg/24 hours)	Cortisol Range (nmol/24 hours)
direct urine	105	20.9–292.3	57.7–806.8

As with all diagnostic assays, each laboratory should determine its own reference range(s) for the diagnostic evaluation of patient results.[11]

Performance Characteristics

Specificity

The ADVIA Centaur Cortisol assay is highly specific for cortisol.

Cross-reactivity by structurally related compounds and pharmaceuticals was determined by spiking each compound into separate human serum samples to a final level of 1000 µg/dL (27,590 nmol/L), unless otherwise noted.

$$\% \text{ cross-reactivity} = \frac{\text{cortisol in spiked sample, µg/dL - cortisol in unspiked sample, µg/dL}}{\text{(concentration of compound added, µg/dL)}} \times 100$$

Compound	% Cross-reactivity	Compound	% Cross-reactivity
Endogenous steroids		***Endogenous steroids***	
Aldosterone	0.3	11ß-hydroxyprogesterone	1.0
Allotetrahydrocortisol (100 µg/dL)	6.5	17α-hydroxyprogesterone	1.2
Androstenedione	ND*	17ß-hydroxypregnanolone	ND
Corticosterone	5.3	11-keto-androsterone	ND
Cortisone (100 µg/dL)	31.1	11-keto-etiocholanolone	1.8
α-cortol	ND	Pregnanetriol	ND
α-cortolone	ND	Pregnenolone	0.5
ß-cortol	ND	Progesterone	ND
ß-cortolone	ND	Spironolactone	ND
Dehydrocorticosterone	1.9	Testosterone	0.2
11-deoxycorticosterone	1.8	Tetrahydrocortisol	ND
11-deoxycortisol (100 µg/dL)	23.3	Tetrahydrocortisone	0.3
21-deoxycortisol (100 µg/dL)	8.1	Tetrahydro-11-deoxycortisol	ND
20α-dihydrocortisol	0.50		
20ß-dihydrocortisol	1.3	***Synthetic steroids***	
20α-dihydrocortisone	0.2	Prednisolone (50 µg/dL)	109
20ß-dihydrocortisone	ND	6-methyl-prednisolone (100 µg/dL)	26.2
11ß-hydroxyandrosterone	ND	Dexamethasone	0.20
6ß-hydroxycortisol	6.8	Prednisone (100 µg/dL)	34.0
11ß-hydroxyetiocholanolone	ND	Canrenone	0.3

* ND = ≤ 0.14

Interference testing was determined according to CLSI Document EP7-A2.[12]

Sensitivity and Assay Range

The ADVIA Centaur Cortisol assay measures serum cortisol concentrations up to 75 µg/dL (2069 nmol/L) with a minimum detectable concentration (analytical sensitivity) of 0.20 µg/dL (5.5 nmol/L). Analytical sensitivity is defined as the concentration of cortisol that corresponds to the RLUs that are two standard deviations less than the mean RLUs of 20 replicate determinations of the Cortisol zero standard.

Method Comparison

For 394 serum samples in the range of 0.49 to 58.76 µg/dL (13.52 to 1621.24 nmol/L), the relationship between the ADVIA Centaur Cortisol assay and the ACS:180 Cortisol assay is described by the equation:

ADVIA Centaur Cortisol = 1.01 (ACS:180 Cortisol) + 0.26 µg/dL

Correlation coefficient (r) = 0.99

For 109 direct urine samples in the range of 18.9 to 307.7 µg/24 hours (52.2 to 849.3 nmol/24 hours), the relationship between the ADVIA Centaur Cortisol assay and the ACS:180 Cortisol assay is described by the equation:

ADVIA Centaur Cortisol = 1.06 (ACS:180 Cortisol) + 0.404 µg/24 hours

Correlation coefficient (r) = 0.99

Dilution Recovery

Five human serum samples in the range of 31.22 to 67.12 µg/dL (861.36 to 1851.84 nmol/L) of cortisol were diluted 1:2, 1:4, 1:8, and 1:16 with Multi-Diluent 3 and assayed for recovery and parallelism. The recoveries ranged from 86.2 to 114.0% with a mean of 101.1%.

Sample	Dilution	Observed (µg/dL)	Expected (µg/dL)	Observed (nmol/L)	Expected (nmol/L)	Recovery %
1	—	67.12		1851.84		
	1:2	35.01	33.56	965.93	925.92	104.3
	1:4	18.23	16.78	502.97	462.96	108.6
	1:8	9.33	8.39	257.41	231.48	111.2
	1:16	4.53	4.20	124.98	115.88	107.9
	Mean					108.0
2	—	45.51		1255.62		
	1:2	21.92	22.75	604.77	627.67	96.4
	1:4	11.22	11.38	309.56	313.97	98.6
	1:8	5.33	5.69	147.05	156.99	93.7
	Mean					96.2
3	—	57.16		1577.04		
	1:2	29.70	28.58	819.42	788.52	103.9
	1:4	14.15	14.29	390.40	394.26	99.0
	1:8	7.46	7.15	205.82	197.27	104.3
	1:16	3.75	3.57	103.46	98.50	105.0
	Mean					103.1
4	—	31.22		861.36		
	1:2	15.19	15.61	419.09	430.68	97.3
	1:4	7.03	7.81	193.96	215.48	90.0
	1:8	3.41	3.90	94.08	107.60	87.4
	1:16	1.68	1.95	46.35	53.80	86.2
	Mean					90.2
5	—	47.50		1310.53		
	1:2	23.43	23.75	646.43	655.26	98.7
	1:4	13.54	11.88	373.57	327.77	114.0
	1:8	6.56	5.94	180.99	163.88	110.4
	1:16	3.22	2.97	88.84	81.94	108.4
	Mean					107.9
Mean						**101.1**

Spiking Recovery

Varying amounts of cortisol were added to 7 samples with endogenous cortisol levels of 4.7 to 9.6 µg/dL (130.2 to 266.0 nmol/L). The recoveries ranged from 84.8 to 113.0% with a mean of 99.4%.

Sample	Amount Added (µg/dL)	Observed (µg/dL)	Amount Added (nmol/L)	Observed (nmol/L)	Recovery %
1	—	7.25	—	200.03	
	5	12.90	137.95	355.91	113.0
	10	17.39	275.90	479.79	101.4
	20	28.54	551.80	787.42	106.5
	50	55.79	1379.50	1539.25	97.1
	60	66.35	1655.40	1830.60	98.5
	Mean				103.3
2	—	4.72	—	130.22	
	5	10.02	137.95	276.45	106.0
	10	14.23	275.90	392.61	95.1
	20	24.69	551.80	681.20	99.9
	50	48.84	1379.50	1347.50	88.2
	60	66.31	1655.40	1829.49	102.7
	Mean				98.4
3	—	9.64	—	265.97	
	5	15.10	137.95	416.61	109.2
	10	19.59	275.90	540.49	99.5
	20	29.00	551.80	800.11	96.8
	50	56.25	1379.50	1551.94	93.2
	60	69.76	1655.40	1924.68	100.2
	Mean				99.8
4	—	8.05	—	222.10	
	5	13.35	137.95	368.33	106.0
	10	17.39	275.90	479.79	93.4
	20	27.54	551.80	759.83	97.5
	50	60.96	1379.50	1681.89	105.8
	60	65.55	1655.40	1808.52	95.8
	Mean				99.7
5	—	7.66	—	211.34	
	5	12.40	137.95	342.12	94.8
	10	17.14	275.90	472.89	94.8
	20	28.23	551.80	778.87	102.9
	50	59.29	1379.50	1635.81	103.3
	60	72.07	1655.40	1988.41	107.4
	Mean				100.6
6	—	6.89	—	190.10	
	5	11.74	137.95	323.91	97.0
	10	16.52	275.90	455.79	96.3
	20	26.69	551.80	736.38	99.0
	50	56.95	1379.50	1571.25	100.1
	60	61.03	1655.40	1683.82	90.2
	Mean				96.5
7	—	7.29	—	201.13	
	5	11.53	137.95	318.11	84.8
	10	17.57	275.90	484.76	102.8
	20	27.69	551.80	763.97	102.0
	50	59.03	1379.50	1628.64	103.5
	60	63.01	1655.40	1738.45	92.9
	Mean				97.2
Mean					**99.4**

Precision

Five samples were assayed 6 times, in each of 24 runs, on 6 systems, (n = 144 for each sample), over a period of 2 days. The following results were obtained:

Mean (µg/dL)	Mean (nmol/L)	Within-run % CV	Run-to-run % CV	Total % CV
3.88	107.05	3.69	5.45	6.58
5.63	155.33	3.09	3.83	4.92
14.17	390.95	2.89	3.07	4.22
27.53	759.55	3.82	1.86	4.25
37.15	1024.97	2.98	3.99	4.98

Traceability of Standardization

The ADVIA Centaur Cortisol assay is standardized using internal standards manufactured analytically which are traceable to gas chromatography-mass spectroscopy (GCMS). Assigned values for calibrators are traceable to this standardization.

Technical Assistance

For customer support, contact your local technical support provider or distributor.

www.siemens.com/diagnostics

References

1. Pudek MR. Adrenal hormones. In: Kaplan LA, Pesce AJ, editors. Clinical chemistry: therapy, analysis, and correlation. St. Louis: CV Mosby, 1989. p.672–81.
2. Whitley RJ, Meikle AW, Watts NB. Endocrinology, part VI: adrenocortical steroids. In: Burtis CA, Ashwood ER, editors. Textbook of clinical chemistry, 2nd ed. Philadelphia: WB Saunders, 1994. p.1808–21.
3. Chodosh LA, Daniels GH. Addison's disease. Endocrinologist 1993;3(3):166–81.
4. Miller J, Crapo L. The biochemical diagnosis of hypercortisolism. Endocrinologist 1994;4(1):7–16.
5. Reagent Water Technical Bulletin. Siemens Healthcare Diagnostics, 107060.
6. Clinical and Laboratory Standards Institute (formerly NCCLS). *Procedures for the Handling and Processing of Blood Specimens; Approved Guideline - Third Edition.* Wayne, PA: Clinical and Laboratory Standards Institute; 2004. NCCLS Document H18-A3.
7. Centers for Disease Control. Update: Universal precautions for prevention of transmission of human immunodeficiency virus, hepatitis B virus and other bloodborne pathogens in healthcare settings. MMWR, 1988;37:377–82, 387–8.
8. Clinical and Laboratory Standards Institute (formerly NCCLS). *Protection of Laboratory Workers From Occupationally Acquired Infections; Approved Guideline - Third Edition.* Wayne, PA: Clinical and Laboratory Standards Institute; 2005. NCCLS Document M29-A3.
9. Federal Occupational Safety and Health Administration. Bloodborne Pathogens Standard. 29 CFR 1910.1030.
10. Boscato LM, Stuart MC. Heterophilic antibodies: a problem for all immunoassays. Clin Chem 1988;34:27–33.
11. Clinical and Laboratory Standards Institute (formerly NCCLS). *How to Define and Determine Reference Intervals in the Clinical Laboratory; Approved Guideline - Second Edition.* Wayne, PA: Clinical and Laboratory Standards Institute; 2000. NCCLS Document C28-A2.
12. Clinical and Laboratory Standards Institute (formerly NCCLS). *Interference Testing in Clinical Chemistry; Approved Guideline - Second Edition.* Wayne, PA: Clinical and Laboratory Standards Institute; 2005. NCCLS document EP7-A2.

ADVIA Centaur, ReadyPack, and ACS:180 are trademarks of Siemens Healthcare Diagnostics.
© 2008 Siemens Healthcare Diagnostics Inc. All rights reserved.
US Pats 5,110,932; 5,241,070; 5,538,901; 5,609,822; 5,656,426; 5,788,928

Origin: US

Siemens Healthcare Diagnostics Inc.
Tarrytown, NY 10591-5097 USA

EC REP Siemens Healthcare Diagnostics Ltd.
Sir William Siemens Sq.
Frimley, Camberley, UK GU16 8QD

Siemens Healthcare
Diagnostics Pty Ltd
885 Mountain Highway
Bayswater Victoria 3153
Australia

シーメンスヘルスケア・
ダイアグノスティクス株式会社
東京都品川区東五反田3−20−14
Siemens Healthcare Diagnostics
輸入

Digitoxin (DGTN)

CE

Assay Summary

Sample Type	***Serum, Heparinized Plasma***
Sample Volume	***10 µL***
Calibrator	***Z***
Sensitivity and Assay Range	***1.5–80 ng/mL (2.0–104.6 nmol/L)***

Contents

REF	Contents	Number of Tests
09046419 (119714)	5 ReadyPack® primary reagent packs containing ADVIA Centaur® DGTN Lite Reagent and Solid Phase ADVIA Centaur DGTN Master Curve card	250
or		
08861968 (118453)	1 ReadyPack primary reagent pack containing ADVIA Centaur DGTN Lite Reagent and Solid Phase ADVIA Centaur DGTN Master Curve card	50

For a definition of symbols used in product labeling, refer to *Understanding the Symbols* in Appendix D.

Intended Use

For *in vitro* diagnostic use in the quantitative determination of digitoxin in serum or plasma using the ADVIA Centaur and ADVIA Centaur XP systems.

The ADVIA Centaur Digitoxin assay was compared with the ACS:180® Digitoxin assay. For 289 samples in the range of 2.74 to 41.90 ng/mL (3.58 to 54.76 nmol/L), the relationship between the ADVIA Centaur Digitoxin assay and the ACS:180 Digitoxin assay is described by the equation:

ADVIA Centaur Digitoxin = 0.98 (ACS:180 Digitoxin) + 0.26 ng/mL

Correlation coefficient (r) = 0.98

Materials Required but Not Provided

REF	Description	Contents
05165553	Calibrator Z	6 vials of low calibrator CAL L 6 vials of high calibrator CAL H
or		
05165359	Calibrator Z	2 vials of low calibrator CAL L 2 vials of high calibrator CAL H

Optional Reagents

REF	Description	Contents
04311114 (110317)	ADVIA Centaur Multi-Diluent 5 M-DIL 5	2 ReadyPack ancillary reagent packs containing 5 mL/pack
08839946 (570055)	Multi-Diluent 5 M-DIL 5	20 mL/vial
109602	DGTN Master Curve Material	6 x 1 mL

Summary and Explanation of the Test

Digitoxin (molecular weight = 764.9 daltons) is a cardiac glycoside drug used to treat congestive heart failure and some cardiac arrhythmias.[1] Digitoxin strengthens the contraction of the cardiac muscle and reduces heart rate by improving cardiac output.

Digitoxin toxicity is a common and serious problem in the clinical setting. Toxic symptoms can be difficult to distinguish from underdosage.[2] There is also wide variability in the way patients metabolize digitoxin, requiring that different dosage requirements be determined for each patient. Plasma half-life can vary from 3 to 16 days.

Generally, levels of approximately 10 to 30 ng/mL (13.1 to 39.2 nmol/L) are seen in patients with an appropriate therapeutic response to digitoxin.[1] Due to differences in antibody specificity, the ADVIA Centaur Digitoxin assay may have less reactivity to some metabolites in certain patient samples. Certain metabolites may or may not be pharmalogically active. Depending on the individual, levels greater than 25 ng/mL (32.7 nmol/L) can be associated with toxic symptoms. In some cases, concentrations greater than the conventional therapeutic range may be required to control certain arrhythmias. Conversely, some people are more sensitive to the drug and show signs of toxicity well below 30 ng/mL (39.2 nmol/L). Because of the relatively narrow therapeutic index for digitoxin, a rapid, precise, and direct method for determining serum digitoxin levels is required.

Routine monitoring of serum digitoxin concentrations is necessary to maintain therapeutic efficacy and avoid toxicity. Serum digitoxin levels combined with other clinical data provide the clinician with useful information to aid in adjusting patient dosage, achieving optimal therapeutic effect, and avoiding useless subtherapeutic or harmful toxic doses.

Assay Principle

The ADVIA Centaur Digitoxin assay is a competitive immunoassay using direct, chemiluminescent technology. Digitoxin in the patient sample competes with digoxin, which is covalently coupled to the paramagnetic particles in the Solid Phase for binding to the acridinium ester-labeled monoclonal mouse anti-digitoxin antibody in the Lite Reagent.

The system automatically performs the following actions:

- Dispenses 10 µL of sample into a cuvette.
- Dispenses 50 µL of Lite Reagent and incubates for 2.5 minutes at 37°C.
- Dispenses 250 µL of Solid Phase and incubates for 5.0 minutes at 37°C.
- Separates, aspirates, and washes the cuvettes with reagent water.[3]
- Dispenses 300 µL each of Acid Reagent and Base Reagent to initiate the chemiluminescent reaction.
- Reports results according to the selected option, as described in the system operating instructions or in the online help system.

An inverse relationship exists between the amount of digitoxin present in the patient sample and the amount of relative light units (RLUs) detected by the system..

Specimen Collection and Handling

NOTE: Available literature references present conflicting and complex recommendations on the use of gel barrier tubes for therapeutic drug monitoring samples. Each lab should contact their specific tube manufacturer for additional information and recommendations for therapeutic drug monitoring testing with the ADVIA Centaur systems.

Serum, heparinized plasma, or EDTA plasma are the recommended sample types for this assay. Samples for digitoxin testing should be drawn immediately before the next dose or no less than 6 hours after dosing.

The effects of anticoagulants on the ADVIA Centaur Digitoxin assay were evaluated using six matched donor sets of blood drawn into red top serum, heparin, and EDTA collection tubes. Digitoxin [(from 44.65 to 48.11 ng/mL) (58.4 to 62.9 nmol/L)] was added to each sample and the percent recovery was determined. All samples were run in replicates of three. The percent recovery for samples collected into heparin, and EDTA collection tubes was found to be 91.3% to 107.1% of the measured concentration of digitoxin for samples collected into red top serum collection tubes.

The following recommendations for handling and storing blood samples are furnished by the Clinical and Laboratory Standards Institute (CLSI, formerly NCCLS):[4]

- Collect all blood samples observing universal precautions for venipuncture.
- Allow samples to clot adequately before centrifugation.
- Keep tubes stoppered and upright at all times.
- Do not use samples that have been stored at room temperature for longer than 8 hours.
- Tightly cap and refrigerate specimens at 2° to 8°C if the assay is not completed within 8 hours.
- Freeze samples at or below -20°C if the sample is not assayed within 48 hours.
- Freeze samples only once and mix thoroughly after thawing.

Before placing samples on the system, ensure that samples have the following characteristics:

- Samples are free of fibrin or other particulate matter.
- Samples are free of bubbles.

Reagents

Store the reagents upright at 2–8°C.
Mix all primary reagent packs by hand before loading them onto the system. Visually inspect the bottom of the reagent pack to ensure that all particles are dispersed and resuspended. For detailed information about preparing the reagents for use, refer to Appendix C, *Handling Reagents*.

Reagent Pack	Reagent	Volume	Ingredients	Storage	Stability
ADVIA Centaur DGTN ReadyPack primary reagent pack	Lite Reagent	2.5 mL/ reagent pack	monoclonal mouse anti-digitoxin antibody (~60 ng/mL) labeled with acridinium ester in buffer with protein stabilizers, sodium azide (< 0.1%), and preservatives	2–8°C	Until the expiration date on the pack label. For onboard stability, refer to *Onboard Stability and Calibration Interval.*
	Solid Phase	12.5 mL/ reagent pack	digoxin (~3.4 µg/mL) covalently coupled to paramagnetic particles in buffer with protein stabilizers, sodium azide (< 0.1%), and preservatives	2–8°C	Until the expiration date on the pack label. For onboard stability, refer to *Onboard Stability and Calibration Interval.*

Reagent Pack	Reagent	Volume	Ingredients	Storage	Stability
ADVIA Centaur M-DIL 5 ReadyPack ancillary reagent pack	Multi-Diluent 5	5.0 mL/ reagent pack	human plasma with sodium azide (< 0.1%)	2–8°C	Until the expiration date on the pack label or 28 consecutive days after accessing the ancillary reagent pack.

CAUTION: Sodium azide can react with copper and lead plumbing to form explosive metal azides. On disposal, flush reagents with a large volume of water to prevent the buildup of azides, if disposal into a drain is in compliance with federal, state, and local requirements.

CAUTION! POTENTIAL BIOHAZARD: Contains human source material. While each human serum or plasma donor unit used in the manufacture of this product was tested by FDA-approved methods and found nonreactive for hepatitis B surface antigen (HBsAg), antibody to hepatitis C (HCV), and antibody to HIV-1/2, all products manufactured using human source material should be handled as potentially infectious. Because no test method can offer complete assurance that hepatitis B or C viruses, HIV, or other infectious agents are absent, these products should be handled according to established good laboratory practices.[5-7]

CAUTION: This device contains material of animal origin and should be handled as a potential carrier and transmitter of disease.

For *in vitro* diagnostic use.

Loading Reagents

Ensure that the system has sufficient primary and ancillary reagent packs. For detailed information about preparing the system, refer to the system operating instructions or to the online help system.

CAUTION: Mix all primary reagent packs by hand before loading them onto the system. Visually inspect the bottom of the reagent pack to ensure that all particles are dispersed and resuspended. For detailed information about preparing the reagents for use, refer to Appendix C, *Handling Reagents*.

Load the ReadyPack reagent packs in the primary reagent area using the arrows as a placement guide. The system automatically mixes the primary reagent packs to maintain homogeneous suspension of the reagents. For detailed information about loading reagents, refer to the system operating instructions or to the online help system.

If automatic dilution of a sample is required, load ADVIA Centaur Multi-Diluent 5 in the ancillary reagent entry.

Onboard Stability and Calibration Interval

The ADVIA Centaur Digitoxin assay can be run using either the high or low volume usage option. If you use the low volume usage option, you will need to modify the test definition parameters for the assay. For detailed information about modifying test definitions, refer to the system operating instructions or to the online help system.

- High volume usage = use of more than one primary reagent pack within the Onboard Stability period indicated in the table for *High Volume Usage*.
- Low volume usage = use of less than one primary reagent pack within the Onboard Stability period indicated in the table for *High Volume Usage*.

High Volume Usage

Onboard Stability	Calibration Interval
7 days	28 days

Additionally, the ADVIA Centaur Digitoxin assay requires a two-point calibration:

- when changing lot numbers of primary reagent packs
- when replacing system components
- when quality control results are repeatedly out of range

CAUTION:

- Discard the primary reagent packs at the end of the *High Volume Usage* onboard stability interval.
- Do not use reagents beyond the expiration date.

Low Volume Usage

NOTE: For low volume usage, load only one primary reagent pack on the system at a time. Perform a calibration every time you load a fresh primary reagent pack.

Onboard Stability	Calibration Interval
28 days	7 days

Additionally, the ADVIA Centaur Digitoxin assay requires a two-point calibration:

- when changing lot numbers of primary reagent packs
- when replacing system components
- when quality control results are repeatedly out of range

CAUTION:

- Discard the primary reagent pack at the end of the *Low Volume Usage* onboard stability interval. When the Primary Reagent Stability option is set to **USE BEYOND**, the system does not display a flag when the reagent exceeds the onboard stability.
- Do not use reagents beyond the expiration date.

Master Curve Calibration

The ADVIA Centaur Digitoxin assay requires a Master Curve calibration when using a new lot number of Lite Reagent and Solid Phase. For each new lot number of Lite Reagent and Solid Phase, use the barcode reader or keyboard to enter the Master Curve values on the system. The Master Curve card contains the Master Curve values. For detailed information about entering calibration values, refer to the system operating instructions or to the online help system.

Quality Control

For detailed information about entering quality control values, refer to the system operating instructions or to the online help system.

To monitor system performance and chart trends, as a minimum requirement, two levels of quality control material should be assayed on each day that samples are analyzed. Quality control samples should also be assayed when performing a two-point calibration. Treat all quality control samples the same as patient samples.

Siemens Healthcare Diagnostics recommends the use of commercially available quality control materials with at least 2 levels (low and high). A satisfactory level of performance is achieved when the analyte values obtained are within the Acceptable Control Range for the system or within your range, as determined by an appropriate internal laboratory quality control scheme.

If the quality control results do not fall within the Expected Values or within the laboratory's established values, do not report results. Take the following actions:

- Verify that the materials are not expired.
- Verify that required maintenance was performed.
- Verify that the assay was performed according to the instructions for use.
- Rerun the assay with fresh quality control samples.
- If necessary, contact your local technical support provider or distributor for assistance.

Sample Volume

This assay requires 10 µL of sample for a single determination. This volume does not include the unusable volume in the sample container or the additional volume required when performing duplicates or other tests on the same sample. For detailed information about determining the minimum required volume, refer to *Sample Volume Requirements* in the *ADVIA Centaur Reference Manual.*

NOTE: The sample volume required to perform onboard dilution differs from the sample volume required to perform a single determination. Refer to the following information for the sample volume required to perform onboard dilutions:

Dilution	Sample Volume (µL)
1:2	100

Assay Procedure

For detailed procedural information, refer to the system operating instructions or to the online help system.

Procedural Notes

Calculations

For detailed information about how the system calculates results, refer to the system operating instructions or to the online help system.

The system reports serum digitoxin results in ng/mL (common units) or nmol/L (SI units), depending on the units defined when setting up the assay. The conversion formula is 1 ng/mL = 1.307 nmol/L.

Dilutions

- Serum samples with digitoxin levels greater than 80 ng/mL (104.6 nmol/L) must be diluted and retested to obtain accurate results. Use Multi-Diluent 5 to dilute samples.
- Patient samples can be automatically diluted by the system or prepared manually.
- For automatic dilutions, ensure that ADVIA Centaur Multi-Diluent 5 is loaded and set the system parameters as follows:

  Dilution point: ≤ 80 ng/mL (104.6 nmol/L)

  Dilution factor: 2

  For detailed information about automatic dilutions, refer to the system operating instructions or to the online help system.
- Manually dilute the patient samples when patient results exceed the linearity of the assay using automatic dilution, or when laboratory protocol requires manual dilution.

- Use Multi-Diluent 5 to manually dilute patient samples, and then load the diluted sample in the sample rack, replacing the undiluted sample.
- Ensure that results are mathematically corrected for dilution. If a dilution factor is entered when scheduling the test, the system automatically calculates the result.

Disposal

Dispose of hazardous or biologically contaminated materials according to the practices of your institution. Discard all materials in a safe and acceptable manner, and in compliance with all federal, state, and local requirements.

Limitations

Heterophilic antibodies in human serum can react with reagent immunoglobulins, interfering with *in vitro* immunoassays.[8] Patients routinely exposed to animals or to animal serum products can be prone to this interference and anomalous values may be observed. Additional information may be required for diagnosis.

Serum specimens that contain 5, 25, and 50 ng/mL (6.5, 32.7, and 65.4 nmol/L) of digitoxin and are . . .	Have an insignificant effect on the assay up to . . .
hemolyzed	500 mg/dL of hemoglobin
lipemic	1000 mg/dL of triglycerides
icteric	20 mg/dL of bilirubin

Expected Results

A therapeutic range of 10 to 30 ng/mL (13.1 to 39.2 nmol/L) has been previously reported for digitoxin.[1] Digitoxin levels must be evaluated in conjunction with the complete clinical profile to provide effective therapy.

The ADVIA Centaur Digitoxin assay utilizes a monoclonal antibody that demonstrates a high specificity to digitoxin. This may result in differences in reported results when compared to other tests due to cross reactivity differences with certain metabolites. Each laboratory should determine the appropriateness of this range for the diagnostic evaluation of patient results.[9]

Performance Characteristics

Specificity

Pooled serum samples at therapeutic digitoxin levels of approximately 20 ng/mL (26.1 nmol/L) were spiked with the compounds listed below to concentrations as shown. ADVIA Centaur Digitoxin assay results from the spiked samples were compared with those of unspiked control samples. Percent cross-reactivity is calculated as:

$$\% \text{ cross-reactivity} = \frac{(\text{concentration of spiked sample} - \text{concentration of unspiked sample})}{\text{concentration of cross-reactant}} \times 100$$

Compound	Amount Added (ng/mL)	% Cross-reactivity
Digoxin	400	< 1.0
Digoxigenin	1000	< 0.1
Digitoxigenin	60	29.4
Digitoxigenin bis-digitoxoside	40	118.9
Digitoxigenin mono-digitoxoside	40	35.0
Lanatoside-A	40	29.4
Ouabain	1000	< 0.1
Aldosterone	1000	< 0.1
Corticosterone	1000	< 0.1
Cortisol	5000	< 0.1

Compound	Amount Added (ng/mL)	% Cross-reactivity
Cortisone	1000	< 0.1
11-Deoxycortisol	1000	< 0.5
Dexamethosone	1000	< 0.1
Estradiol	1000	< 0.5
Estriol	1000	< 0.5
Prednisone	1000	< 0.5
Pregnenolone	1000	< 0.1
Progesterone	1000	< 0.1
Spironolactone	1000	< 0.1
Testosterone	1000	< 0.1
Theophylline	1000	< 0.1

Interference testing was determined according to CLSI Document EP7-A2.[10]

Sensitivity and Assay Range

The ADVIA Centaur Digitoxin assay measures digitoxin concentrations up to 80 ng/mL (104.6 nmol/L) with a minimum detectable concentration (analytical sensitivity) of 1.5 ng/mL (2.0 nmol/L). Analytical sensitivity is defined as the concentration of digitoxin that corresponds to the RLUs that are two standard deviations less than the mean RLUs of 20 replicate determinations of the Digitoxin zero standard.

Method Comparison

For 289 samples in the range of 2.74 to 41.90 ng/mL (3.58 to 54.76 nmol/L), the relationship between the ADVIA Centaur Digitoxin assay and the ACS:180 Digitoxin assay is described by the equation:

ADVIA Centaur Digitoxin = 0.98 (ACS:180 Digitoxin) + 0.26 ng/mL

Correlation coefficient (r) = 0.98

Dilution Recovery

Ten human serum samples in the range of 29.92 to 41.14 ng/mL (39.11 to 53.77 nmol/L) of digitoxin were diluted 1:2, 1:4, and 1:8 with Multi-Diluent 5 and assayed for recovery and parallelism. The recoveries ranged from 79.8% to 120.0% with a mean of 102.1%.

Sample	Dilution	Observed (ng/mL)	Expected (ng/mL)	Observed (nmol/L)	Expected (nmol/L)	Recovery %
1	—	33.24	33.24	43.44	43.44	
	1:2	17.43	16.62	22.78	21.72	104.9
	1:4	9.80	8.31	12.81	10.86	117.9
	1:8	3.95	4.15	5.16	5.42	95.2
	Mean					106.0
2	—	36.30	36.30	47.44	47.44	
	1:2	18.62	18.15	24.34	23.72	102.6
	1:4	8.99	9.07	11.75	11.85	99.0
	1:8	3.62	4.54	4.73	5.93	79.8
	Mean					93.8
3	—	29.92	29.92	39.11	39.11	
	1:2	15.98	14.96	20.89	19.55	106.9
	1:4	8.68	7.48	11.34	9.78	116.1
	1:8	4.49	3.74	5.87	4.89	120.0
	Mean					114.3

Sample	Dilution	Observed (ng/mL)	Expected (ng/mL)	Observed (nmol/L)	Expected (nmol/L)	Recovery %
4	—	40.37	40.37	52.76	52.76	
	1:2	20.71	20.18	27.07	26.38	102.6
	1:4	10.24	10.09	13.38	13.19	101.5
	1:8	5.19	5.05	6.78	6.60	102.8
	Mean					102.3
5	—	34.48	34.48	45.07	45.07	
	1:2	18.43	17.24	24.09	22.53	106.9
	1:4	9.93	8.62	12.98	11.27	115.2
	1:8	3.91	4.31	5.11	5.63	90.8
	Mean					104.3
6	—	31.76	31.76	41.51	41.51	
	1:2	15.06	15.88	19.68	20.76	94.8
	1:4	7.15	7.94	9.35	10.38	90.1
	1:8	3.74	3.97	4.89	5.19	94.3
	Mean					93.1
7	—	41.14	41.14	53.77	53.77	
	1:2	21.94	20.57	28.68	26.88	106.7
	1:4	10.26	10.29	13.41	13.45	99.7
	1:8	4.71	5.14	6.16	6.72	91.6
	Mean					99.3
8	—	39.92	39.92	52.18	52.18	
	1:2	20.57	19.96	26.88	26.09	103.1
	1:4	10.28	9.98	13.44	13.04	103.0
	1:8	5.09	4.99	6.65	6.52	101.9
	Mean					102.7
9	—	30.75	30.75	40.19	40.19	
	1:2	15.30	15.38	20.00	20.10	99.5
	1:4	7.58	7.69	9.91	10.05	98.6
	1:8	4.28	3.84	5.59	5.02	111.3
	Mean					103.1
10	—	34.91	34.91	45.63	45.63	
	1:2	18.45	17.46	24.11	22.82	105.7
	1:4	8.77	8.73	11.46	11.41	100.5
	1:8	4.33	4.36	5.66	5.70	99.2
	Mean					101.8
Mean						**102.1**

Spiking Recovery

Varying amounts of digitoxin were added to three serum samples with endogenous levels of digitoxin ranging from 1.6 to 2.5 ng/mL (2.1 to 3.3 nmol/L). The recoveries ranged from 88.2% to 115.0% with a mean of 97.5%.

Sample	Amount Added (ng/mL)	Observed (ng/mL)	Amount Added (nmol/L)	Observed (nmol/L)	Recovery %
1	—	1.8	—	2.4	
	10	13.3	13.1	17.4	115.0
	25	27.4	32.7	35.8	102.4
	45	47.8	58.8	62.5	102.2
	70	72.5	91.5	94.8	101.0
	Mean				105.2

Sample	Amount Added (ng/mL)	Observed (ng/mL)	Amount Added (nmol/L)	Observed (nmol/L)	Recovery %
2	—	1.6	—	2.1	
	10	10.5	13.1	13.7	89.0
	25	24.6	32.7	32.2	92.0
	45	41.3	58.8	54.0	88.2
	70	63.8	91.5	83.4	88.9
	Mean				89.5
3	—	2.5	—	3.3	
	10	12.7	13.1	16.6	102.0
	25	28.2	32.7	36.9	102.8
	45	45.4	58.8	59.3	95.3
	70	66.0	91.5	86.3	90.7
	Mean				97.7
Mean					**97.5**

Precision

Three samples were assayed 3 to 6 times, in each of 21 runs, on 9 systems, (n = 204 for each sample), over a period of 8 days. The following results were obtained:

Mean (ng/mL)	Mean (nmol/L)	Within-run % CV	Run-to-run % CV	Total % CV
10.37	13.55	4.90	4.40	6.59
22.83	29.84	3.59	2.95	4.64
42.54	55.60	2.40	2.30	3.33

Traceability of Standardization

The ADVIA Centaur Digitoxin assay is traceable to an internal standard manufactured using U.S.P. (United States Pharmacopeia) material. Assigned values for calibrators are traceable to this standardization.

Technical Assistance

For customer support, contact your local technical support provider or distributor.

www.siemens.com/diagnostics

References

1. Moe GK, Farah AE. Digitalis and allied cardiac glycosides. In: Goodman LS, Gilman A, eds. The pharmacological basis of therapeutics (Fifth Edition). New York: Macmillan Publishing Co. 1975; 653–82.
2. McNeely MDD. Making digitalis safer. Drug Ther 1975; 5:222–4.
3. Reagent Water Technical Bulletin. Siemens Healthcare Diagnostics, 107060.
4. Clinical and Laboratory Standards Institute (formerly NCCLS). *Procedures for the Handling and Processing of Blood Specimens; Approved Guideline - Third Edition.* Wayne, PA: Clinical and Laboratory Standards Institute; 2004. NCCLS Document H18-A3.
5. Centers for Disease Control. 1988. Update: Universal precautions for prevention of transmission of human immunodeficiency virus, hepatitis B virus and other bloodborne pathogens in healthcare settings. MMWR, 37:377–382, 387, 388.
6. Clinical and Laboratory Standards Institute (formerly NCCLS). *Protection of Laboratory Workers From Occupationally Acquired Infections; Approved Guideline - Third Edition.* Wayne, PA: Clinical and Laboratory Standards Institute; 2005. NCCLS Document M29-A3.
7. Federal Occupational Safety and Health Administration, Bloodborne Pathogens Standard, 29 CFR 1910.1030.
8. Boscato LM, Stuart MC. Heterophilic antibodies: a problem for all immunoassays. Clin Chem 1988;34:27–33.
9. Clinical and Laboratory Standards Institute (formerly NCCLS). *How to Define and Determine Reference Intervals in the Clinical Laboratory; Approved Guideline - Second Edition.* Wayne, PA: Clinical and Laboratory Standards Institute; 2000. NCCLS Document C28-A2.
10. Clinical and Laboratory Standards Institute (formerly NCCLS). *Interference Testing in Clinical Chemistry; Approved Guideline - Second Edition.* Wayne, PA: Clinical and Laboratory Standards Institute; 2005. NCCLS document EP7-A2.

ADVIA Centaur, ReadyPack, and ACS:180 are trademarks of Siemens Healthcare Diagnostics.

© 2011 Siemens Healthcare Diagnostics. All rights reserved.

US Pats 5,110,932; 5,656,426; 5,609,822; 5,788,928

Origin: US

Siemens Healthcare Diagnostics Inc.
Tarrytown, NY 10591-5097 USA

EC REP Siemens Healthcare Diagnostics Ltd.
Sir William Siemens Sq.
Frimley, Camberley, UK GU16 8QD

Siemens Healthcare
Diagnostics Pty Ltd
885 Mountain Highway
Bayswater Victoria 3153
Australia

シーメンスヘルスケア・
ダイアグノスティクス株式会社
東京都品川区東五反田 3－20－14
Siemens Healthcare Diagnostics
輸入

Digoxin (DIG)

CE

Assay Summary

Sample Type	*Serum*
Sample Volume	*50 µL*
Calibrator	*B*
Sensitivity and Assay Range	*0.1 – 5.0 ng/mL (0.128 – 6.4 nmol/L)*

Contents

REF	Contents	Number of Tests
05207094 (110772)	5 ReadyPack® primary reagent packs containing ADVIA Centaur® DIG Lite Reagent and Solid Phase ADVIA Centaur DIG Master Curve card	250
or		
06794163 (110771)	1 ReadyPack primary reagent pack containing ADVIA Centaur DIG Lite Reagent and Solid Phase ADVIA Centaur DIG Master Curve card	50

For a definition of symbols used in product labeling, please refer to *Understanding the Symbols* in Appendix D.

Intended Use

For *in vitro* diagnostic use in the quantitative determination of digoxin in serum using the ADVIA Centaur and ADVIA Centaur XP systems.

Materials Required But Not Provided

REF	Description	Contents
00652707	Calibrator B	6 vials of low calibrator CAL L 6 vials of high calibrator CAL H
or		
00649625	Calibrator B	2 vials of low calibrator CAL L 2 vials of high calibrator CAL H

Optional Reagents

REF	Description	Contents
08302543 (110316)	ADVIA Centaur Multi-Diluent 4 M-DIL 4	2 ReadyPack ancillary reagent packs containing 5 mL/pack
02210485 (672193)	Multi-Diluent 4 M-DIL 4	10 mL/vial
672426	DIG Master Curve Material	6 x 1 mL

Summary and Explanation of the Test

Digoxin belongs to the class of compounds known as digitalis glycosides, and is the most commonly prescribed drug for congestive heart failure (CHF). Digoxin strengthens the contraction of the cardiac muscle and reduces heart rate by improving cardiac output. In addition, digoxin therapy is also indicated in most cases of atrial fibrillation and atrial flutter whether or not CHF is present.[1]

Therapeutically, digoxin is effective within a narrow serum concentration range. Knowledge of the serum level is important for establishing optimal doses for the patient and for diagnosing digoxin toxicity. Toxic levels can be reached from repeated doses when renal function is impaired because 60 to 90% of digoxin is excreted in the urine unchanged.[1] Other complications that add to digoxin toxicity include:[1-3]

- variation in gastrointestinal absorption
- variation in nonrenal excretion
- an inaccurate history of dosage

Digoxin toxicity is a frequent complication of digoxin therapy. In patients with CHF, symptoms of digoxin toxicity frequently resemble symptoms of CHF itself. In other words, high toxic levels of digoxin often mimic sub-therapeutic levels, thereby complicating therapy.

Some patients require or tolerate doses that are highly toxic for other patients. Patients exhibiting toxic effects are frequently elderly individuals and those with impaired renal function. Therefore, each serum level must be interpreted with the patient's clinical status in mind.

Assay Principle

The ADVIA Centaur Digoxin assay is a competitive immunoassay using direct chemiluminescent technology. Digoxin in the patient sample competes with digitoxin, which is covalently coupled to paramagnetic particles in the Solid Phase for a limited amount of acridinium ester-labeled monoclonal mouse anti-digoxin antibody in the Lite Reagent.

The system automatically performs the following steps:

- dispenses 50 µL of sample into a cuvette
- dispenses 50 µL of Lite Reagent and incubates for 5.0 minutes at 37°C
- dispenses 250 µL of Solid Phase and incubates for 2.5 minutes at 37°C
- separates, aspirates, and washes the cuvettes with reagent water[5]
- dispenses 300 µL each of Acid Reagent and Base Reagent to initiate the chemiluminescent reaction
- reports results according to the selected option, as described in the system operating instructions or in the online help system

An inverse relationship exists between the amount of digoxin present in the patient sample and the amount of relative light units (RLUs) detected by the system.

Specimen Collection and Handling

NOTE: Available literature references present conflicting and complex recommendations on the use of gel barrier tubes for therapeutic drug monitoring samples. Each lab should contact their specific tube manufacturer for additional information and recommendations for therapeutic drug monitoring testing with the ADVIA Centaur systems.

Serum is the recommended sample type for this assay.

The following recommendations for handling and storing blood samples are furnished by the National Committee for Clinical Laboratory Standards (NCCLS):[6]

- Collect all blood samples observing universal precautions for venipuncture.
- Allow samples to clot adequately before centrifugation.
- Keep tubes stoppered and upright at all times.
- Do not use samples that have been stored at room temperature for longer than 8 hours.
- Tightly cap and refrigerate specimens at 2 to 8°C if the assay is not completed within 8 hours.
- Freeze samples at or below -20°C if the sample is not assayed within 48 hours.
- Freeze samples only once and mix thoroughly after thawing.

Before placing samples on the system ensure that:

- Samples are free of fibrin or other particulate matter.
- Samples are free of bubbles.

Reagents

Store the reagents upright at 2–8°C.
Mix all primary reagent packs by hand before loading them onto the system. Visually inspect the bottom of the reagent pack to ensure that all particles are dispersed and resuspended. For detailed information about preparing the reagents for use, refer to Appendix C, *Handling Reagents*.

Reagent Pack	Reagent	Volume	Ingredients	Storage	Stability
ADVIA Centaur DIG ReadyPack primary reagent pack	Lite Reagent	2.5 mL/ reagent pack	monoclonal mouse anti-digoxin antibody (~26.4 ng/mL) labeled with acridinium ester in protein buffered saline with sodium azide (0.11%) and preservatives	2–8°C	until the expiration date on the pack label. For onboard stability, refer to *Onboard Stability and Calibration Interval.*
	Solid Phase	12.5 mL/ reagent pack	digitoxin (~2 ng/mL) covalently coupled to paramagnetic particles in protein buffered saline with sodium azide (0.11%) and preservatives	2–8°C	until the expiration date on the pack label. For onboard stability, refer to *Onboard Stability and Calibration Interval.*
ADVIA Centaur M-DIL 4 ReadyPack ancillary reagent pack	Multi-Diluent 4	5.0 mL/ reagent pack	human defibrinated plasma with sodium azide (0.1%)	2–8°C	until the expiration date on the pack label or 28 consecutive days after accessing the ancillary reagent pack

CAUTION: Sodium azide can react with copper and lead plumbing to form explosive metal azides. On disposal, flush reagents with a large volume of water to prevent the buildup of azides, if disposal into a drain is in compliance with federal, state, and local requirements.

R22 **Harmful!** Harmful if swallowed. After contact with skin, wash immediately with plenty of soap
S28 and water. **Contains:** sodium azide; Lite Reagent, Solid Phase

CAUTION! POTENTIAL BIOHAZARD: Contains human source material. While each human serum or plasma donor unit used in the manufacture of this product was tested by FDA-approved methods and found nonreactive for hepatitis B surface antigen (HBsAg), antibody to hepatitis C (HCV), and antibody to HIV-1/2, all products manufactured using human source material should be handled as potentially infectious. Because no test method can offer complete assurance that hepatitis B or C viruses, HIV, or other infectious agents are absent, these products should be handled according to established good laboratory practices.[7-9]

CAUTION: This device contains material of animal origin and should be handled as a potential carrier and transmitter of disease.

For *In Vitro* Diagnostic Use.

Loading Reagents

Ensure that the system has sufficient primary and ancillary reagent packs. For detailed information about preparing the system, refer to the system operating instructions or to the online help system.

CAUTION: Mix all primary reagent packs by hand before loading them onto the system. Visually inspect the bottom of the reagent pack to ensure that all particles are dispersed and resuspended. For detailed information about preparing the reagents for use, refer to Appendix C, *Handling Reagents*.

Load the ReadyPack reagent packs in the primary reagent area using the arrows as a placement guide. The system automatically mixes the primary reagent packs to maintain homogeneous suspension of the reagents. For detailed information about loading reagents, refer to the system operating instructions or to the online help system.

If automatic dilution of a sample is required, load ADVIA Centaur Multi-Diluent 4 in the ancillary reagent entry.

Onboard Stability and Calibration Interval

The ADVIA Centaur Digoxin assay can be run using either the high or low volume usage option. If you use the low volume usage option, you will need to modify the test definition parameters for the assay. For detailed information about modifying test definitions, refer to the system operating instructions or to the online help system.

- High volume usage = use of more than one primary reagent pack within the Onboard Stability period indicated in the table for *High Volume Usage*.
- Low volume usage = use of less than one primary reagent pack within the Onboard Stability period indicated in the table for *High Volume Usage*.

High Volume Usage

Onboard Stability	Calibration Interval
3 days	28 days

Additionally, the ADVIA Centaur Digoxin assay requires a two-point calibration:

- when changing lot numbers of primary reagent packs
- when replacing system components
- when quality control results are repeatedly out of range

CAUTION:

- Discard the primary reagent packs at the end of the *High Volume Usage* onboard stability interval.
- Do not use reagents beyond the expiration date.

Low Volume Usage

NOTE: For low volume usage, load only one primary reagent pack on the system at a time. Perform a calibration every time you load a fresh primary reagent pack.

Onboard Stability	Calibration Interval
28 days	3 days

Additionally, the ADVIA Centaur Digoxin assay requires a two-point calibration:

- when changing lot numbers of primary reagent packs
- when replacing system components
- when quality control results are repeatedly out of range

CAUTION:

- Discard the primary reagent pack at the end of the *Low Volume Usage* onboard stability interval. When the Primary Reagent Stability option is set to **USE BEYOND**, the system does not display a flag when the reagent exceeds the onboard stability.
- Do not use reagents beyond the expiration date.

Master Curve Calibration

The ADVIA Centaur Digoxin assay requires a Master Curve calibration when using a new lot number of Lite Reagent and Solid Phase. For each new lot number of Lite Reagent and Solid Phase, use the barcode reader or keyboard to enter the Master Curve values on the system. The Master Curve card contains the Master Curve values. For detailed information about entering Master Curve values, refer to the system operating instructions or to the online help system.

Quality Control

For detailed information about entering quality control values, refer to the system operating instructions or to the online help system.

To monitor system performance and chart trends, as a minimum requirement, two levels of quality control material should be assayed on each day that samples are analyzed. Quality control samples should also be assayed when performing a two-point calibration. Treat all quality control samples the same as patient samples.

Siemens Healthcare Diagnostics recommends the use of commercially available quality control materials with at least 2 levels (low and high). A satisfactory level of performance is achieved when the analyte values obtained are within the Acceptable Control Range for the system or within your range, as determined by an appropriate internal laboratory quality control scheme.

If the quality control results do not fall within the Expected Values or within the laboratory's established values, do not report results. Take the following actions:

- Verify that the materials are not expired.
- Verify that required maintenance was performed.
- Verify that the assay was performed according to the instructions for use.
- Rerun the assay with fresh quality control samples.
- If necessary, contact your local technical support provider or distributor for assistance.

Sample Volume

This assay requires 50 µL of sample for a single determination. This volume does not include the unusable volume in the sample container or the additional volume required when performing duplicates or other tests on the same sample. For detailed information about determining the minimum required volume, refer to *Sample Volume Requirements* in the *ADVIA Centaur Reference Manual.*

Assay Procedure

For detailed procedural information, refer to the system operating instructions or to the online help system.

Procedural Notes

Calculations

For detailed information about how the system calculates results, refer to the system operating instructions or to the online help system.

The system reports serum digoxin results in ng/mL (mass units) or nmol/L (SI units), depending on the units defined when setting up the assay. The conversion formula is 1 ng/mL = 1.28 nmol/L.

Dilutions

- Serum samples with digoxin levels greater than 5.0 ng/mL (6.4 nmol/L) must be diluted and retested to obtain accurate results.
- Patient samples can be automatically diluted by the system or prepared manually.
- For automatic dilutions, ensure that ADVIA Centaur Multi-Diluent 4 is loaded and set the system parameters as follows:

  Dilution point: ≤ 5.0 ng/mL (6.4 nmol/L)

  Dilution factor: 2

  For detailed information about automatic dilutions, refer to the system operating instructions or to the online help system.
- Manually dilute the patient samples when patient results exceed the linearity of the assay using automatic dilution, or when laboratory protocol requires manual dilution.
- Use Multi-Diluent 4 to manually dilute patient samples, and then load the diluted sample in the sample rack, replacing the undiluted sample.
- Ensure that results are mathematically corrected for dilution. If a dilution factor is entered when scheduling the test, the system automatically calculates the result.

Disposal

Dispose of hazardous or biologically contaminated materials according to the practices of your institution. Discard all materials in a safe and acceptable manner, and in compliance with all federal, state, and local requirements.

Limitations

Digibind® drug therapy affects digoxin immunoassay results. Interpret digoxin results from patients who have been administered Digibind with caution.

Heterophilic antibodies in human serum can react with reagent immunoglobulins, interfering with *in vitro* immunoassays.[10] Patients routinely exposed to animals or to animal serum products can be prone to this interference and anomalous values may be observed. Additional information may be required for diagnosis.

Serum specimens that are . . .	Have an insignificant effect on the assay up to . . .
hemolyzed	500 mg/dL of hemoglobin
lipemic	1000 mg/dL of triglycerides
icteric	20 mg/dL of bilirubin

Expected Results

A therapeutic range of 0.8 to 2.0 ng/mL (1.024 to 2.56 nmol/L) has been previously reported for digoxin.[11,12]

It is important to point out that the distinction between adequate digitalization and toxicity in patients cannot be made on the basis of digoxin concentration alone. Findings must be interpreted with a knowledge of this limitation.

As with all therapeutic drug assays, each laboratory should determine the appropriateness of this range for the diagnostic evaluation of patient results.[13]

Performance Characteristics

Specificity

The cross-reactivity of the ADVIA Centaur Digoxin assay with a substance can be expressed as the ratio of

- the amount of digoxin required to displace 50% of the maximally bound labeled anti-digoxin from the Solid Phase, and
- the amount of the cross-reactant to give the same 50% displacement.

The amount of digoxin required to give 50% displacement in the ADVIA Centaur Digoxin is 1.3 ng/mL (1.7 nmol/L).

Cross-reactant	% Cross-reactivity
Deslanoside	60
Digoxin	100
Digoxigenin bisdigitoxoside	94
Lanatoside C (Cedelanid-C)	65
α-Acetyl Digoxin	70
Digoxigenin monodigitoxoside	68
β-Methyl Digoxin	68
Digitoxin	< 1
Digoxigenin	< 1.5
Dihydrodigoxin	< 1
Ouabain	< 1

In addition, a single serum sample was spiked with various natural and synthetic steroidal compounds. To determine if these compounds had an effect on the digoxin measurement, the serum sample was spiked with concentrations of at least 10 times the normally encountered physiological level.

The following compounds were tested:

- Aldosterone
- Canrenoic acid
- Cortisol
- Cortisone
- Estradiol
- Desoxycorticosterone
- Prednisolone
- Prednisone
- Progesterone
- Spironolactone
- Testosterone

These compounds did not have a significant effect on the digoxin measurement ($p \geq 0.05$, t-test).

Digoxin-like Immunoreactive Factor Samples

Nondigitalized patient samples from the digoxin-like immunoreactive factor (DLIF) category were evaluated to determine the degree of cross-reactivity with the ADVIA Centaur Digoxin assay.

Category	N	Mean (ng/mL)	Observed Range (ng/mL)	Mean (nmol/L)	Observed Range (nmol/L)
Neonates	25	0.01	0.0–0.06	0.013	0.0–0.07
Liver Disease	42	0.13	0.0–0.27	0.166	0.0–0.34
Renal Failure	42	0.06	0.0–0.22	0.077	0.0–0.2816
Cord	25	0.00	0.0–0.04	0.00	0.0–0.051

Interference testing was determined according to NCCLS Document EP7-P.[14]

Sensitivity and Assay Range

The ADVIA Centaur Digoxin assay measures serum digoxin concentrations up to 5.0 ng/mL (6.4 nmol/L) with a minimum detectable concentration (analytical sensitivity) of 0.1 ng/mL (0.128 nmol/L). Analytical sensitivity is defined as the concentration of digoxin that corresponds to the RLUs that are two standard deviations less than the mean RLUs of 20 replicate determinations of the Digoxin zero standard.

Method Comparison

For 323 samples in the range of 0.17 to 4.60 ng/mL (0.22 to 5.89 nmol/L), the relationship between the ADVIA Centaur Digoxin assay and the ACS:180® Digoxin assay is described by the equation:

ADVIA Centaur Digoxin = 0.99 (ACS:180 Digoxin) + 0.02 ng/mL

Correlation coefficient (r) = 0.99

Dilution Recovery

Five human serum samples in the range of 3.95 to 5.03 ng/mL (5.06 to 6.44 nmol/L) of digoxin were diluted 1:2, 1:4, and 1:8 with Multi-Diluent 4 and assayed for recovery and parallelism. The recoveries ranged from 87.1% to 112.5% with a mean of 102.9%.

Sample	Dilution	Observed (ng/mL)	Expected (ng/mL)	Observed (nmol/L)	Expected (nmol/L)	Recovery %
1	—	3.95		5.06		
	1:2	2.15	1.97	2.75	2.52	109.0
	1:4	1.06	0.99	1.36	1.27	107.8
	1:8	0.46	0.49	0.59	0.63	93.9
	Mean					103.6
2	—	4.34		5.56		
	1:2	2.29	2.17	2.93	2.78	105.3
	1:4	1.21	1.09	1.55	1.40	111.5
	1:8	0.58	0.54	0.74	0.69	107.2
	Mean					108.0
3	—	4.34		5.56		
	1:2	2.18	2.17	2.79	2.78	100.6
	1:4	1.15	1.09	1.47	1.40	105.6
	1:8	0.54	0.54	0.69	0.69	99.1
	Mean					101.8

Sample	Dilution	Observed (ng/mL)	Expected (ng/mL)	Observed (nmol/L)	Expected (nmol/L)	Recovery %
4	—	5.03		6.44		
	1:2	2.34	2.52	3.00	3.23	93.0
	1:4	1.26	1.26	1.61	1.61	99.9
	1:8	0.55	0.63	0.70	0.81	87.1
	Mean					93.3
5	—	4.30		5.50		
	1:2	2.23	2.15	2.85	2.75	103.5
	1:4	1.16	1.08	1.48	1.38	107.9
	1:8	0.60	0.54	0.77	0.69	112.5
	Mean					108.0
Mean						**102.9**

Spiking Recovery

Varying amounts of digoxin were added to five samples with endogenous digoxin levels of less than 0.07 ng/mL (0.09 nmol/L). The recoveries ranged from 90% to 112% with a mean of 99%.

Sample	Amount Added (ng/mL)	Observed (ng/mL)	Amount Added (nmol/L)	Observed (nmol/L)	Recovery %
1	—	0.07	—	0.09	
	1.36	1.32	1.74	1.69	92
	2.37	2.54	3.03	3.25	104
	3.37	3.38	4.31	4.33	98
	4.43	4.35	5.67	5.57	97
	Mean				98
2	—	0.05	—	0.06	
	1.36	1.37	1.74	1.75	97
	2.37	2.70	3.03	3.46	112
	3.37	3.46	4.31	4.43	101
	4.43	4.44	5.67	5.68	99
	Mean				102
3	—	0.06	—	0.08	
	1.36	1.35	1.74	1.73	95
	2.37	2.68	3.03	3.43	111
	3.37	3.47	4.31	4.44	101
	4.43	4.61	5.67	5.90	103
	Mean				103
4	—	0.03	—	0.04	
	1.36	1.29	1.74	1.65	93
	2.37	2.62	3.03	3.35	109
	3.37	3.43	4.31	4.39	101
	4.43	4.39	5.67	5.62	98
	Mean				100
5	—	0.07	—	0.09	
	1.36	1.30	1.74	1.66	90
	3.37	3.27	4.31	4.19	95
	4.43	4.42	5.67	5.66	98
	Mean				94
Mean					**99**

Precision

Six samples were assayed > 3 times, in 20 runs, on 6 systems, (n = 72 for each sample), over a period of 2 days. The following results were obtained:

Mean (ng/mL)	Mean (nmol/L)	Within-run % CV	Run-to-run % CV	Total % CV
0.54	0.69	5.6	7.2	9.2
0.83	1.06	4.0	3.9	5.6
1.75	2.24	2.6	2.0	3.3
2.04	2.61	3.2	1.6	3.6
3.12	3.99	3.2	1.8	3.7
4.68	5.99	3.2	4.4	5.5

Traceability of Standardization

The ADVIA Centaur Digoxin assay is traceable to an internal standard manufactured using U.S.P. (United States Pharmacopeia) material. Assigned values for calibrators are traceable to this standardization.

Technical Assistance

For customer support, please contact your local technical support provider or distributor.

www.siemens.com/diagnostics

References

1. Moe GK, Farah AE. Digitalis and allied cardiac glycosides. In: Gilman AG, Goodman LS, Rall TW, et al., editors. The pharmacological basis of therapeutics. New York: F Macmillan, 1975. p.653–79.
2. Chen IW, Heminger LA. Digoxin and digitoxin. In: Pesce AJ, Kaplan LA, editors. Methods in clinical chemistry. 2nd ed. St. Louis: CV Mosby, 1989. p.897–902.
3. Moyer TP, Pippenger C, Blanke R, et al. Therapeutic drug monitoring. In: Tietz NW, editor. Fundamentals of clinical chemistry. 3rd ed. Philadelphia: WB Saunders, 1987. p.855–6.
4. Chen IW, Heminger LA. Digoxin. In: Pesce AJ, Kaplan LA, editors. Clinical chemistry: theory, analysis, and correlation. 2nd ed. St. Louis: CV Mosby, 1989. p.1352–55.
5. Reagent Water Technical Bulletin. Siemens Healthcare Diagnostics, 107060.
6. National Committee for Clinical Laboratory Standards. Procedures for the handling and processing of blood specimens; second edition; approved guideline. NCCLS Document H18-A2; Wayne (PA): NCCLS; 1999 Oct. 40p.
7. Centers for Disease Control. Update: Universal precautions for prevention of transmission of human immunodeficiency virus, hepatitis B virus and other bloodborne pathogens in healthcare settings. MMWR, 1988;37:377–82, 387–8.
8. National Committee for Clinical Laboratory Standards. Protection of laboratory workers from occupationally acquired infections-second edition; approved guideline. NCCLS Document M29-A2; Wayne (PA): NCCLS; 2001 Dec. 105p.
9. Federal Occupational Safety and Health Administration. Bloodborne Pathogens Standard. 29 CFR 1910.1030.
10. Boscato LM, Stuart MC. Heterophilic antibodies: a problem for all immunoassays. Clin Chem 1988;34:27–33.
11. Taggart AJ, McDevitt DG. Digitalis: Its place in modern therapy. Drugs 1980;20:398–404.
12. Graves SW, Valdes R, Brown BA, et al. Endogenous digoxin-immunoreactive substance in human pregnancies. J Clin Endocrin Metab 1984;58:748-51.
13. National Committee for Clinical Laboratory Standards. How to define, determine, and utilize reference intervals in the clinical laboratory; approved guideline. NCCLS Document C28-A. Wayne (PA): NCCLS; 1995 June 59p.
14. National Committee for Clinical Laboratory Standards. Interference testing in clinical chemistry. Proposed Guideline. NCCLS document EP7-P. Wayne (PA):NCCLS;1986.

ADVIA Centaur, ReadyPack, and ACS:180 are trademarks of Siemens Healthcare Diagnostics.

Digibind is a trademark of Burroughs Wellcome.

© 2008 Siemens Healthcare Diagnostics Inc. All rights reserved.

US Pats 4,745,181; 4,918,192; 5,110,932; 5,609,822; 5,788,928

199

Origin: US

Siemens Healthcare Diagnostics Inc.
Tarrytown, NY 10591-5097 USA

EC REP Siemens Healthcare Diagnostics Ltd.
Sir William Siemens Sq.
Frimley, Camberley, UK GU16 8QD

Siemens Healthcare
Diagnostics Pty Ltd
885 Mountain Highway
Bayswater Victoria 3153
Australia

シーメンスヘルスケア・
ダイアグノスティクス株式会社
東京都品川区東五反田 3－20－14
Siemens Healthcare Diagnostics
輸入

Estradiol-6 III (E_2-6 III)

CE

Assay Summary

Sample Type	*Serum*
Sample Volume	*75 µL*
Calibrator	*6*
Sensitivity and Assay Range	*7.0 – 1000 pg/mL (25.7 – 3670 pmol/L)*

Contents

REF	Contents	Number of Tests
01492657	5 ReadyPack® primary reagent packs containing ADVIA Centaur® E_2-6 III Lite Reagent, Solid Phase and Antibody Reagent ADVIA Centaur E_2-6 III Master Curve card	500
or		
01488773	1 ReadyPack primary reagent packs containing ADVIA Centaur E_2-6 III Lite Reagent, Solid Phase and Antibody Reagent ADVIA Centaur E_2-6 III Master Curve card	100

For a definition of symbols used in product labeling, refer to *Understanding the Symbols* in Appendix D.

Intended Use

For *in vitro* diagnostic use in the quantitative determination of estradiol in serum using ADVIA Centaur and ADVIA Centaur XP systems.

Materials Required But Not Provided

REF	Description	Contents
04013288 (109563)	Calibrator 6	6 vials of low calibrator CAL L 6 vials of high calibrator CAL H
or		
06295949 (109562)	Calibrator 6	2 vials of low calibrator CAL L 2 vials of high calibrator CAL H

Optional Reagents

REF	Description	Contents
02981228 (110320)	ADVIA Centaur Multi-Diluent 9 M-DIL 9	2 ReadyPack ancillary reagent packs containing 5 mL/pack
07044850 (100438)	Multi-Diluent 9 M-DIL 9	20 mL/vial
570093	Estradiol-6 Master Curve Material	6 x 1 mL

Summary and Explanation of the Test

Measuring the circulating levels of estradiol is important for assessing ovarian function and monitoring follicular development for assisted reproduction protocols.[1] In normal, nonpregnant females, estradiol is secreted mainly by the combined function of the theca and granulosa cells of the developing follicle and the corpus luteum.[2] During pregnancy, the placenta is a source of estradiol secretion. Estradiol enters the blood stream where 1 to 3% is non-protein bound, 40% is bound to sex-hormone binding globulin (SHBG), and the remainder is bound to albumin.[3] The primary function of estradiol is to stimulate growth of the female sex organs and development of secondary sexual characteristics.

Estradiol plays an essential role throughout the human menstrual cycle.[2] During the early follicular phase, the estradiol level is relatively constant and low. By day seven, the dominant follicle is established and the estradiol level rises significantly. The elevated estradiol level suppresses the FSH level by negative feedback on the hypothalamus and pituitary gland and triggers a rapid rise of LH. The estradiol level falls significantly as LH reaches its peak. Normally ovulation occurs 10 to 12 hours after the LH peak and 24 to 36 hours after the estradiol peak. During the luteal phase the estradiol level increases, achieving a maximum level about 8 days after ovulation. The elevated estradiol level is involved in the regression of the corpus luteum. Unless fertilization of the ovum takes place, the estradiol level decreases, signaling the start of a new cycle.

Elevated estradiol levels in females may also result from primary or secondary ovarian hyperfunction.[4] Very high estradiol levels are found during the induction of ovulation[1] for assisted reproduction therapy or in pregnancy. Decreased estradiol levels in females may result from either the lack of ovarian synthesis (primary ovarian hypofunction and menopause) or a lesion in the hypothalamus-pituitary axis (secondary ovarian hypofunction). Estradiol levels are normally low in males. Elevated estradiol levels in males may be due to increased aromatization of androgens, resulting in gynecomastia.[4]

Assay Principle

The ADVIA Centaur Estradiol-6 III assay is a competitive immunoassay using direct chemiluminescent technology, that derives its name from the coupling of the estradiol immunogen at the specificity-enhancing sixth position, allowing for the production of a highly specific antibody. This 17β-estradiol-6-antibody allows the ADVIA Centaur Estradiol-6 III assay to be used across a wide range of applications. Estradiol in the patient sample competes with acridinium ester-labeled estradiol in the Lite Reagent for a limited amount of rabbit anti-estradiol antibody in the Antibody Reagent. Rabbit anti-estradiol is captured by mouse anti-rabbit IgG, which is coupled to paramagnetic particles in the Solid Phase.

The system automatically performs the following actions:

- dispenses 75 µL of sample and 50 µL of Antibody Reagent into a cuvette and incubates for 29 minutes at 37°C
- dispenses 50 µL of Lite Reagent and 250 µL of Solid Phase and incubates for 18 minutes at 37°C
- separates, aspirates, and washes the cuvettes with reagent water[5]
- dispenses 300 µL each of Acid Reagent and Base Reagent to initiate the chemiluminescent reaction
- reports results according to the selected option, as described in the system operating instructions or in the online help system

An inverse relationship exists between the amount of estradiol present in the patient sample and the amount of relative light units (RLUs) detected by the system.

Specimen Collection and Handling

Serum is the recommended sample type for this assay.

The following recommendations for handling and storing blood samples are furnished by the Clinical and Laboratory Standards Institute (CLSI, formerly NCCLS):[6]

- Collect all blood samples observing universal precautions for venipuncture.
- Allow samples to clot adequately before centrifugation.
- Keep tubes stoppered and upright at all times.
- Do not use samples that have been stored at room temperature for longer than 8 hours.
- Tightly cap and refrigerate specimens at 2° to 8°C if the assay is not completed within 8 hours.
- Freeze samples at or below -20°C if the sample is not assayed within 48 hours.
- Keep samples frozen for no more than 6 months in non-frost free freezers.
- Freeze samples only once and mix thoroughly after thawing.

Before placing samples on the system, ensure that samples have the following characteristics:

- Samples are free of fibrin or other particulate matter.
- Samples are free of bubbles.

Reagents

Store the reagents upright at 2–8°C.
Mix all primary reagent packs by hand before loading them onto the system. Visually inspect the bottom of the reagent pack to ensure that all particles are dispersed and resuspended. For detailed information about preparing the reagents for use, refer to Appendix C, *Handling Reagents*.

Reagent Pack	Reagent	Volume	Ingredients	Storage	Stability
ADVIA Centaur E_2-6 III ReadyPack primary reagent pack	Lite Reagent	5.0 mL/ reagent pack	estradiol derivative (~2 ng/mL) labeled with acridinium ester in buffered saline with sodium azide (0.1%) and preservatives	2–8°C	Until the expiration date on the pack label. For onboard stability, refer to *Onboard Stability and Calibration Interval.*
	Solid Phase	25.0 mL/ reagent pack	monoclonal mouse anti-rabbit IgG antibody (~50 µg/mL) coupled to paramagnetic particles in buffered saline with sodium azide (0.1%) and preservatives	2–8°C	Until the expiration date on the pack label. For onboard stability, refer to *Onboard Stability and Calibration Interval.*
	Antibody Reagent	5.0 mL/ reagent pack	rabbit anti-estradiol antibody (~0.6 µg/mL) and a steroid releasing agent (~50 ng/mL) in buffered saline with sodium azide (0.1%) and preservatives	2–8°C	Until the expiration date on the pack label. For onboard stability, refer to *Onboard Stability and Calibration Interval.*
ADVIA Centaur M-DIL 9 ReadyPack ancillary reagent pack	Multi-Diluent 9	5.0 mL/ reagent pack	human plasma with sodium azide (0.1%) and preservatives	2–8°C	Until the expiration date on the pack label or 28 consecutive days after accessing the ancillary reagent pack.

R22
S28

HARMFUL! Harmful if swallowed. After contact with skin, wash immediately with plenty of soap and water. **CONTAINS:** sodium azide; Lite Reagent, Solid Phase, Antibody Reagent, Multi-Diluent 9

CAUTION! POTENTIAL BIOHAZARD: Contains human source material. While each human serum or plasma donor unit used in the manufacture of this product was tested by FDA-approved methods and found nonreactive for hepatitis B surface antigen (HBsAg), antibody to hepatitis C (HCV), and antibody to HIV-1/2, all products manufactured using human source material should be handled as potentially infectious. Because no test method can offer complete assurance that hepatitis B or C viruses, HIV, or other infectious agents are absent, these products should be handled according to established good laboratory practices.[7-9]

CAUTION: This device contains material of animal origin and should be handled as a potential carrier and transmitter of disease.

NOTE: Sodium azide can react with copper and lead plumbing to form explosive metal azides. On disposal, flush reagents with a large volume of water to prevent the buildup of azides, if disposal into a drain is in compliance with federal, state, and local requirements.

For *in vitro* diagnostic use.

Loading Reagents

Ensure that the system has sufficient primary and ancillary reagent packs. For detailed information about preparing the system, refer to the system operating instructions or to the online help system.

Mix all primary reagent packs by hand before loading them onto the system. Visually inspect the bottom of the reagent pack to ensure that all particles are dispersed and resuspended. For detailed information about preparing the reagents for use, refer to Appendix C, *Handling Reagents*.

Load the ReadyPack reagent packs in the primary reagent area using the arrows as a placement guide. The system automatically mixes the primary reagent packs to maintain homogeneous suspension of the reagents. For detailed information about loading reagents, refer to the system operating instructions or to the online help system.

If automatic dilution of a sample is required, load ADVIA Centaur Multi-Diluent 9 in the ancillary reagent entry.

Onboard Stability and Calibration Interval

Onboard Stability	Calibration Interval
28 days	28 days

Additionally, the ADVIA Centaur Estradiol-6 III assay requires a two-point calibration:

- when changing lot numbers of primary reagent packs
- when replacing system components
- when quality control results are repeatedly out of range

NOTE:

- Discard the primary reagent packs at the end of the onboard stability interval.
- Do not use reagents beyond the expiration date.

Master Curve Calibration

The ADVIA Centaur Estradiol-6 III assay requires a Master Curve calibration when using a new lot number of Lite Reagent, Solid Phase, and Antibody Reagent. For each new lot number of Lite Reagent, Solid Phase, and Antibody Reagent, use the barcode reader or keyboard to enter the Master Curve values on the system. The Master Curve card contains the Master Curve values. For detailed information about entering Master Curve values, refer to the system operating instructions or to the online help system.

Quality Control

For detailed information about entering quality control values, refer to the system operating instructions or to the online help system.

To monitor system performance and chart trends, as a minimum requirement, two levels of quality control material should be assayed on each day that samples are analyzed. Quality control samples should also be assayed when performing a two-point calibration. Treat all quality control samples the same as patient samples.

Siemens Healthcare Diagnostics recommends the use of commercially available quality control materials with at least 2 levels (low and high). A satisfactory level of performance is achieved when the analyte values obtained are within the Acceptable Control Range for the system or within your range, as determined by an appropriate internal laboratory quality control scheme.

If the quality control results do not fall within the Expected Values or within the laboratory's established values, do not report results. Take the following actions:

- Verify that the materials are not expired.
- Verify that required maintenance was performed.
- Verify that the assay was performed according to the instructions for use.
- Rerun the assay with fresh quality control samples.
- If necessary, contact your local technical support provider or distributor for assistance.

Sample Volume

This assay requires 75 µL of sample for a single determination. This volume does not include the unusable volume in the sample container or the additional volume required when performing duplicates or other tests on the same sample. For detailed information about determining the minimum required volume, refer to *Sample Volume Requirements* in the *ADVIA Centaur Reference Manual.*

NOTE: The sample volume required to perform onboard dilution differs from the sample volume required to perform a single determination. Refer to the following information for the sample volume required to perform onboard dilutions:

Dilution	Sample Volume (µL)
1:2	100
1:5, 1:10	40

Assay Procedure

For detailed procedural information, refer to the system operating instructions or to the online help system.

Procedural Notes

Calculations

For detailed information about how the system calculates results, refer to the system operating instructions or to the online help system.

The system reports serum estradiol results in pg/mL (mass units) or pmol/L (SI units), depending on the units defined when setting up the assay. The conversion formula is 1 pg/mL = 3.67 pmol/L.

Dilutions

- Serum samples with estradiol levels greater than 1000 pg/mL (3670 pmol/L) must be diluted and retested to obtain accurate results.
- Patient samples can be automatically diluted by the system or prepared manually.
- For automatic dilutions, ensure that ADVIA Centaur Multi-Diluent 9 is loaded and set the system parameters as follows:

  Dilution point: ≤ 1000 pg/mL (3670 pmol/L)

  Dilution factor: 2, 5, 10

  For detailed information about automatic dilutions, refer to the system operating instructions or to the online help system.
- Manually dilute the patient samples when patient results exceed the linearity of the assay using automatic dilution, or when laboratory protocol requires manual dilution.
- Use Multi-Diluent 9 to manually dilute patient samples, and then load the diluted sample in the sample rack, replacing the undiluted sample.
- Ensure that results are mathematically corrected for dilution. If a dilution factor is entered when scheduling the test, the system automatically calculates the result.

Disposal

Dispose of hazardous or biologically contaminated materials according to the practices of your institution. Discard all materials in a safe and acceptable manner, and in compliance with all federal, state, and local requirements.

Limitations

The ADVIA Centaur Estradiol-6 III assay can be run in random access with all ADVIA Centaur assays except the ADVIA Centaur Rubella M assay.

Do not include ADVIA Centaur Estradiol-6 III and Rubella M samples in the same worklist. If an Estradiol-6 III test is scheduled after the completion of a Rubella M test, 25 replicates of the Probe 3 Dispense Test should be performed. This procedure is completed within 4 minutes and is necessary to ensure there is no carryover from Rubella M assay reagents.

To perform the Probe 3 Dispense Test, select **System Status**, **Diagnostic Tools**, **Dispense Test**, **Probe 3**, **25** (replicates), **Perform.**

Heterophilic antibodies in human serum can react with reagent immunoglobulins, interfering with *in vitro* immunoassays.[10] Patients routinely exposed to animals or to animal serum products can be prone to this interference and anomalous values may be observed. Additional information may be required for diagnosis.

Serum specimens that are . . .	Demonstrate ≤5% change in results up to . . .
hemolyzed	500 mg/dL of hemoglobin
lipemic	1000 mg/dL of triglycerides
icteric	5 mg/dL of bilirubin

Expected Results

Data was obtained on serum samples from 291 apparently healthy individuals. Based on the inner 95% interval, the following reference ranges were established:

Sample Category		N	Median (pg/mL)	Range (pg/mL)	Median (pmol/L)	Range (pmol/L)
Males		115	20.4	11.6–41.2	74.9	42.6–151.2
Menstruating females (by day in cycle relative to LH peak)		36				
Follicular phase	(–12 to –4 days)		58.4	18.9–246.7	214.3	69.4–905.4
Midcycle	(–3 to +2 days)		160.4	35.5–570.8	588.7	130.3–2094.8
Luteal Phase	(+4 to +12 days)		108.9	22.4–256.0	399.7	82.2–939.5
Postmenopausal females (untreated)		140	14.4	ND*–44.5	52.8	ND–163.3

* ND = Not Detectable

As with all *in vitro* diagnostic assays, each laboratory should determine its own reference range(s) for the diagnostic evaluation of patient results.[11]

Performance Characteristics

Specificity

The ADVIA Centaur Estradiol-6 III assay shows high specificity for estradiol. The following compounds were spiked into a steroid-free diluent and the following results were obtained. Percent change is calculated as:

$$\% \text{ change} = \frac{(\text{concentration of spiked sample})}{\text{amount of compound spiked}} \times 100$$

Compound	Amount Added (pg/mL)	% Change
17 α-estradiol	100,000	0.005
17 β-estradiol 3-β -D-Glucuronide	10,000	0.06
17 β-estradiol 17-β-D-Glucuronide	10,000	ND*
17 β-estradiol 3-β-Sulfate	10,000	ND
17 β-estradiol 3, 17-disulfate	10,000	0.0006
17 β-estradiol 3-benzoate	10,000	40.1
17 β-estradiol 17-propionate	10,000	1.06
17 β-estradiol 17-cypionate	100,000	0.289
17 β-estradiol 17-valerate	100,000	0.590
11-hydroxy-estradiol	100,000	0.100
4-hydroxy-estradiol	100,000	2.200
2-methoxy-estradiol	100,000	0.032
Estrone	50,000	0.56
Estrone-3-Sulfate	100,000	0.0006

Compound	Amount Added (pg/mL)	% Change
Estrone-3-β-D-glucuronide	100,000	ND
2-hydroxy-estrone	100,000	0.005
4-hydroxy-estrone	100,000	0.049
Estriol	50,000	0.246
Estriol-3-sulfate	50,000	ND
Estriol-3-β-D-glucuronide	5,000	0.034
Ethinyl Estradiol	100,000	0.742
Equilin	100,000	0.093
Equilenin	100,000	0.648
Ethisterone	100,000	0.001
Ethinynodiol acetate	100,000	0.002
Dehydroepiandrosterone	10,000,000	0.0001
Dehydroepiandrosterone sulfate	10,000,000	< 0.0001
Progesterone	500,000	0.0004
17-hydroxy-progesterone	100,000	0.0001
Testosterone	100,000	0.004
5-α-dihydrotestosterone	100,000	0.002
Testosterone undecanoate	100,000	0.001
Androstenedione	10,000,000	< 0.0001
Androstenediol	10,000,000	0.0001
Mestanolone	5,000	0.02
Aldosterone	200,000	ND
Cortisol	1,000,000	0.0003
11-deoxycortisol	1,000,000	ND
Norethindrone	100,000	0.004
Norethindrone acetate	50,000	0.003
Danazol	100,000	ND
Digoxin	10,000	0.017
Bromocryptine mesylate	100,000	0.0009
Clomiphene	100,000	ND
Tamoxifen	100,000	0.005
Dexamethasone	1,000,000	0.0004
Diethylstilbestrol	100,000	ND

* ND = Not Detectable

Interference testing was determined according to CLSI Document EP7-A2.[12]

Sensitivity and Assay Range

The ADVIA Centaur Estradiol-6 III assay measures estradiol concentrations up to 1000 pg/mL (3670 pmol/L) with a minimum detectable concentration (sensitivity) of 7.0 pg/mL (25.7 pmol/L). Analytical sensitivity is defined as the concentration of estradiol that corresponds to the RLUs that are two standard deviations less than the mean RLUs of 20 replicate determinations of the Estradiol-6 III zero standard.

The functional sensitivity of the ADVIA Centaur Estradiol-6 III assay is 12.5 pg/mL (45.9 pmol/L). The functional sensitivity was determined using multiple patient and quality control samples in the range of 8.73 to 54.5 pg/mL (32.0 to 200 pmol/L). All samples were assayed in triplicate in each of 6 runs over a period of 8 days (n=18 for each sample).

Method Comparison

For 748 samples in the range of 10.0 to 908.9 pg/mL (36.7 to 3335.7 pmol/L), the relationship between the ADVIA Centaur Estradiol-6 III assay and the ADVIA Centaur Estradiol-6 assay is described by the equation:

ADVIA Centaur Estradiol-6 III = 1.06 (ADVIA Centaur Estradiol-6) – 7.74 pg/mL

Correlation coefficient (r) = 0.986

Dilution Recovery

Five human serum samples in the range of 698.0 to 975.8 pg/mL (2561.7 to 3581.2 pmol/L) of estradiol were diluted 1:2, 1:4, and 1:8 with Multi-Diluent 9 and assayed for recovery and parallelism. The recoveries ranged from 93.1% to 113.5% with a mean of 102.8%.

Sample	Dilution	Observed (pg/mL)	Expected (pg/mL)	Observed (pmol/L)	Expected (pmol/L)	Recovery %
1	—	975.8		3581.2		
	1:2	489.6	487.9	1796.8	1790.6	100.3
	1:4	235.5	243.9	864.3	895.3	96.5
	1:8	126.8	122.0	465.4	447.6	104.0
	Mean					100.3
2	—	733.7		2692.7		
	1:2	359.5	366.8	1319.4	1346.3	98.0
	1:4	187.6	183.4	688.5	673.2	102.3
	1:8	97.7	91.7	358.6	336.6	106.5
	Mean					102.3
3	—	944.3		3465.6		
	1:2	506.4	472.2	1858.5	1732.8	107.2
	1:4	260.5	236.1	956.0	866.4	110.3
	1:8	125.6	118.0	460.9	433.2	106.4
	Mean					108.0
4	—	728.9		2675.1		
	1:2	339.4	364.4	1245.6	1337.5	93.1
	1:4	179.2	182.2	657.7	668.8	98.3
	1:8	102.3	91.1	375.4	334.4	112.3
	Mean					101.2
5	—	698.0		2561.7		
	1:2	325.8	349.0	1195.7	1280.8	93.3
	1:4	173.1	174.5	635.3	640.4	99.2
	1:8	99.0	87.3	363.3	320.2	113.5
	Mean					102.0
Mean						**102.8**

Spiking Recovery

Varying amounts of estradiol were added to six samples with endogenous levels of estradiol ranging from 23.4 to 214.6 pg/mL (85.9 to 787.6 pmol/L). The recoveries ranged from 89.2% to 113.0% with a mean of 101.5%.

Sample	Amount Added (pg/mL)	Observed (pg/mL)	Amount Added (pmol/L)	Observed (pmol/L)	Recovery %
1	—	214.6	—	787.6	
	137.0	357.6	502.8	1312.5	104.0
	275.0	523.3	1009.3	1920.5	112.3
	412.0	658.8	1512.0	2417.8	107.8
	550.0	793.5	2018.5	2912.0	105.2
	Mean				107.4
2	—	82.6	—	303.0	
	137.0	204.7	502.8	751.3	89.2
	275.0	348.4	1009.3	1278.6	96.7
	412.0	522.4	1512.0	1917.1	106.7
	550.0	612.4	2018.5	2247.7	96.3
	Mean				97.2
3	—	95.3	—	349.8	
	137.0	234.8	502.8	861.7	101.8
	275.0	367.3	1009.3	1348.1	98.9
	412.0	485.8	1512.0	1783.0	94.8
	550.0	638.8	2018.5	2344.3	98.8
	Mean				98.6
4	—	23.4	—	85.9	
	150.0	158.2	550.5	580.7	89.9
	300.0	339.9	1101.0	1247.5	105.5
	450.0	442.5	1651.5	1623.8	93.1
	600.0	616.6	2202.0	2263.0	98.9
	Mean				96.8
5	—	84.0	—	308.4	
	150.0	230.6	550.5	846.1	97.7
	300.0	374.7	1101.0	1375.3	96.9
	450.0	557.2	1651.5	2044.8	105.1
	600.0	684.6	2202.0	2512.4	100.1
	Mean				100.0
6	—	164.6	—	604.1	
	150.0	334.1	550.5	1226.1	113.0
	300.0	494.5	1101.0	1814.8	110.0
	450.0	618.6	1651.5	2270.3	100.9
	600.0	829.8	2202.0	3045.4	110.9
	Mean				108.7
Mean					**101.5**

Precision

Five samples were assayed 4 times, in each of 14 runs, (n = 56 for each sample), over a period of 18 days. The following results were obtained:

Mean (pg/mL)	Mean (pmol/L)	Within-run % CV	Run-to-run % CV	Total % CV
56.3	206.6	10.0	6.7	12.0
106.9	392.3	5.3	4.6	7.1
208.9	766.7	6.1	5.1	8.0
565.7	2076.1	9.3	6.6	11.4
590.9	2168.6	11.3	5.0	12.3

Standardization

The ADVIA Centaur Estradiol-6 III assay is standardized using internal standards manufactured analytically which are traceable to gas chromatography–mass spectroscopy (GCMS). The following equation describes the relationship between the estradiol standards and GCMS analysis throughout the range of the assay.

$$\text{ADVIA Centaur Estradiol-6 III} = 0.88\ (\text{GCMS}) + 9.0\ \text{pg/mL},\ r = 0.998$$

Assigned values for calibrators are traceable to this standardization.

Technical Assistance

For customer support, contact your local technical support provider or distributor.

www.siemens.com/diagnostics

References

1. Muse K, Wilson EA. Monitoring ovulation induction: use of biochemical and biophysical parameters. Sem Reproduct Endocrinol 1986;4(3):301–9.
2. Speroff L, Glass RH, Kase NG, editors. Clinical gynecologic endocrinology and infertility. 4th ed. Baltimore: Williams and Wilkins, 1989. p.91–119.
3. Ratcliffe WA, Carter GD, Dowsett M, et al. Estradiol assays: applications and guidelines for the provision of a clinical biochemistry service. Ann Clin Biochem 1988;25:466–83.
4. Kicklighter EJ, Norman RJ. The gonads. In: Kaplan LA, Pesce AJ, editors. Clinical chemistry: theory, analysis, and correlation. 2nd ed. St. Louis: CV Mosby, 1989. p.650–63.
5. Reagent Water Technical Bulletin. Siemens Healthcare Diagnostics, 107060.
6. Clinical and Laboratory Standards Institute (formerly NCCLS). Procedures for the Handling and Processing of Blood Specimens; Approved Guideline - Third Edition. Wayne, PA: Clinical and Laboratory Standards Institute; 2004. NCCLS Document H18-A3.
7. Centers for Disease Control. Update: Universal precautions for prevention of transmission of human immunodeficiency virus, hepatitis B virus and other bloodborne pathogens in healthcare settings. MMWR, 1988;37:377–82, 387–8.
8. Clinical and Laboratory Standards Institute (formerly NCCLS). Protection of Laboratory Workers From Occupationally Acquired Infections; Approved Guideline - Third Edition. Wayne, PA: Clinical and Laboratory Standards Institute; 2005. NCCLS Document M29-A3.
9. Federal Occupational Safety and Health Administration. Bloodborne Pathogens Standard. 29 CFR 1910.1030.
10. Boscato LM, Stuart MC. Heterophilic antibodies: a problem for all immunoassays. Clin Chem 1988;34:27–33.
11. Clinical and Laboratory Standards Institute (formerly NCCLS). How to Define and Determine Reference Intervals in the Clinical Laboratory; Approved Guideline - Second Edition. Wayne, PA: Clinical and Laboratory Standards Institute; 2000. NCCLS Document C28-A2.
12. Clinical and Laboratory Standards Institute (formerly NCCLS). Interference Testing in Clinical Chemistry; Approved Guideline - Second Edition. Wayne, PA: Clinical and Laboratory Standards Institute; 2005. NCCLS document EP7-A2.

ADVIA Centaur and ReadyPack are trademarks of Siemens Healthcare Diagnostics.

© 2008 Siemens Healthcare Diagnostics Inc. All rights reserved.

US Pats 5,110,932; 5,241,070; 5,538,901; 5,609,822; 5,656,426; 5,788,928

Origin: US

Siemens Healthcare Diagnostics Inc.
Tarrytown, NY 10591-5097 USA

EC REP Siemens Healthcare Diagnostics Ltd.
Sir William Siemens Sq.
Frimley, Camberley, UK GU16 8QD

Siemens Healthcare
Diagnostics Pty Ltd
885 Mountain Highway
Bayswater Victoria 3153
Australia

シーメンスヘルスケア・
ダイアグノスティクス株式会社
東京都品川区東五反田 3−20−14
Siemens Healthcare Diagnostics
輸入

213

Ferritin (FER)

CE

Assay Summary

Sample Type	***Serum, Heparinized Plasma, EDTA Plasma***
Sample Volume	***25 µL***
Calibrator	***C***
Sensitivity and Assay Range	***0.5 – 1650 ng/mL (1 – 3630 pmol/L)***

Contents

REF	Contents	Number of Tests
00495776 (110746)	5 ReadyPack® primary reagent packs containing ADVIA Centaur® FER Lite Reagent and Solid Phase ADVIA Centaur FER Master Curve card	250
or		
07875728 (110745)	1 ReadyPack primary reagent pack containing ADVIA Centaur FER Lite Reagent and Solid Phase ADVIA Centaur FER Master Curve card	50

For a definition of symbols used in product labeling, please refer to *Understanding the Symbols* in Appendix D.

Intended Use

For *in vitro* diagnostic use in the quantitative determination of ferritin in serum or plasma using the ADVIA Centaur and ADVIA Centaur XP systems to aid in the diagnosis of iron deficiency anemia and iron overload.

Materials Required But Not Provided

REF	Description	Contents
06567787 (672182)	Calibrator C	6 vials of low calibrator CAL L 6 vials of high calibrator CAL H
or		
03439230 (672172)	Calibrator C	2 vials of low calibrator CAL L 2 vials of high calibrator CAL H

Optional Reagents

REF	Description	Contents
07907174 (110313)	ADVIA Centaur Multi-Diluent 1 M-DIL 1	6 ReadyPack ancillary reagent packs containing 25 mL/pack
or		
07293184 (110312)	ADVIA Centaur Multi-Diluent 1 M-DIL 1	2 ReadyPack ancillary reagent packs containing 25 mL/pack
09348792 (672177)	Multi-Diluent 1 M-DIL 1	50 mL/vial
672416	FER Master Curve Material	8 x 1 mL

Summary and Explanation of the Test

Ferritin is a compound composed of iron molecules bound to apoferritin, a protein shell. Stored iron represents about 25% of total iron in the body, and most of this iron is stored as ferritin.[1] Ferritin is found in many body cells, but especially those in the liver, spleen, bone marrow, and in reticuloendothelial cells.[2]

Ferritin plays a significant role in the absorption, storage, and release of iron. As the storage form of iron, ferritin remains in the body tissues until it is needed for erythropoiesis. When needed, the iron molecules are released from the apoferritin shell and bind to transferrin, the circulating plasma protein that transports iron to the erythropoietic cells.[3]

Although dietary iron is poorly absorbed, the body conserves its iron stores carefully, reabsorbing most of the iron released from the breakdown of red blood cells. As a result, the body normally loses only 1 to 2 mg of iron per day, which is generally restored by the iron absorbed in the small intestine from dietary sources.[1]

Ferritin is found in serum in low concentrations and is directly proportional to the body's iron stores.[1] Serum ferritin concentration, when analyzed with other factors such as serum iron, iron-binding capacity, and tissue iron stores, is valuable in the diagnosis of iron-deficiency anemias, anemias of chronic infection, and conditions such as thalassemia and hemochromatosis that are associated with iron overload. Measurement of serum ferritin is particularly valuable in distinguishing iron-deficiency anemias caused by low iron stores from those resulting from inadequate iron utilization.[1]

Assay Principle

The ADVIA Centaur Ferritin assay is a two-site sandwich immunoassay using direct chemiluminometric technology, which uses constant amounts of two anti-ferritin antibodies. The first antibody, in the Lite Reagent, is a polyclonal goat anti-ferritin antibody labeled with acridinium ester. The second antibody, in the Solid Phase, is a monoclonal mouse anti-ferritin antibody, which is covalently coupled to paramagnetic particles.

The system automatically performs the following steps:

- dispenses 25 µL of sample into a cuvette
- dispenses 100 µL of Lite Reagent and 450 µL of Solid Phase and incubates for 7.5 minutes at 37°C
- separates, aspirates, and washes the cuvettes with reagent water[4]
- dispenses 300 µL each of Acid Reagent and Base Reagent to initiate the chemiluminescent reaction
- reports results according to the selected option, as described in the system operating instructions or in the online help system

A direct relationship exists between the amount of ferritin present in the patient sample and the amount of relative light units (RLUs) detected by the system.

Specimen Collection and Handling

Serum, heparinized plasma, or EDTA plasma are the recommended sample types for this assay.

Evaluation of plasma samples showed an average 5% decrease in observed values compared to serum samples.

The following recommendations for handling and storing blood samples are furnished by the National Committee for Clinical Laboratory Standards (NCCLS):[5]

- Collect all blood samples observing universal precautions for venipuncture.
- Allow samples to clot adequately before centrifugation.
- Keep tubes stoppered and upright at all times.
- Do not use samples that have been stored at room temperature for longer than 8 hours.
- Tightly cap and refrigerate specimens at 2 to 8°C if the assay is not completed within 8 hours.
- Freeze samples at or below -20°C if the sample is not assayed within 48 hours.
- Freeze samples only once and mix thoroughly after thawing.

Before placing samples on the system ensure that:

- Samples are free of fibrin or other particulate matter.
- Samples are free of bubbles.

Reagents

Store the reagents upright at 2–8°C.
Mix all primary reagent packs by hand before loading them onto the system. Visually inspect the bottom of the reagent pack to ensure that all particles are dispersed and resuspended. For detailed information about preparing the reagents for use, refer to Appendix C, *Handling Reagents*.

Reagent Pack	Reagent	Volume	Ingredients	Storage	Stability
ADVIA Centaur FER ReadyPack primary reagent pack	Lite Reagent	5.0 mL/ reagent pack	polyclonal goat anti-ferritin antibody (~0.64 µg/mL) labeled with acridinium ester in HEPES buffer with protein stabilizers, sodium azide (< 0.1%), and preservatives	2–8°C	until the expiration date on the pack label. For onboard stability, refer to *Onboard Stability and Calibration Interval.*
	Solid Phase	22.5 mL/ reagent pack	monoclonal mouse anti-ferritin antibody (~32.2 µg/mL) covalently coupled to paramagnetic particles in sodium barbital buffer with protein stabilizers, sodium azide (< 0.1%), and preservatives	2–8°C	until the expiration date on the pack label. For onboard stability, refer to *Onboard Stability and Calibration Interval.*
ADVIA Centaur [Multi 1] ReadyPack ancillary reagent pack	Multi-Diluent 1	25.0 mL/ reagent pack	equine serum with sodium azide (0.1%) and preservatives	2–8°C	until the expiration date on the pack label or 28 consecutive days after accessing the ancillary reagent pack

CAUTION: Sodium azide can react with copper and lead plumbing to form explosive metal azides. On disposal, flush reagents with a large volume of water to prevent the buildup of azides, if disposal into a drain is in compliance with federal, state, and local requirements.

CAUTION: This device contains material of animal origin and should be handled as a potential carrier and transmitter of disease.

For *In Vitro* Diagnostic Use.

Loading Reagents

Ensure that the system has sufficient primary and ancillary reagent packs. For detailed information about preparing the system, refer to the system operating instructions or to the online help system.

CAUTION: Mix all primary reagent packs by hand before loading them onto the system. Visually inspect the bottom of the reagent pack to ensure that all particles are dispersed and resuspended. For detailed information about preparing the reagents for use, refer to Appendix C, *Handling Reagents*.

Load the ReadyPack reagent packs in the primary reagent area using the arrows as a placement guide. The system automatically mixes the primary reagent packs to maintain homogeneous suspension of the reagents. For detailed information about loading reagents, refer to the system operating instructions or to the online help system.

If automatic dilution of a sample is required, load ADVIA Centaur Multi-Diluent 1 in the ancillary reagent entry.

Onboard Stability and Calibration Interval

Onboard Stability	Calibration Interval
28 days	28 days

Additionally, the ADVIA Centaur Ferritin assay requires a two-point calibration:

- when changing lot numbers of primary reagent packs
- when replacing system components
- when quality control results are repeatedly out of range

CAUTION:

- Discard the primary reagent packs at the end of the onboard stability interval.
- Do not use reagents beyond the expiration date.

Master Curve Calibration

The ADVIA Centaur Ferritin assay requires a Master Curve calibration when using a new lot number of Lite Reagent and Solid Phase. For each new lot number of Lite Reagent and Solid Phase, use the barcode reader or keyboard to enter the Master Curve values on the system. The Master Curve card contains the Master Curve values. For detailed information about entering calibration values, refer to the system operating instructions or to the online help system.

Quality Control

For detailed information about entering quality control values, refer to the system operating instructions or to the online help system.

To monitor system performance and chart trends, as a minimum requirement, two levels of quality control material should be assayed on each day that samples are analyzed. Quality control samples should also be assayed when performing a two-point calibration. Treat all quality control samples the same as patient samples.

Siemens Healthcare Diagnostics recommends the use of commercially available quality control materials with at least 2 levels (low and high). A satisfactory level of performance is achieved when the analyte values obtained are within the Acceptable Control Range for the system or within your range, as determined by an appropriate internal laboratory quality control scheme.

If the quality control results do not fall within the Expected Values or within the laboratory's established values, do not report results. Take the following actions:

- Verify that the materials are not expired.
- Verify that required maintenance was performed.
- Verify that the assay was performed according to the instructions for use.
- Rerun the assay with fresh quality control samples.
- If necessary, contact your local technical support provider or distributor for assistance.

Sample Volume

This assay requires 25 µL of sample for a single determination. This volume does not include the unusable volume in the sample container or the additional volume required when performing duplicates or other tests on the same sample. For detailed information about determining the minimum required volume, refer to *Sample Volume Requirements* in the *ADVIA Centaur Reference Manual.*

NOTE: The sample volume required to perform onboard dilution differs from the sample volume required to perform a single determination. Refer to the following information for the sample volume required to perform onboard dilutions:

Dilution	Sample Volume (µL)
1:2	100
1:5	40
1:10	20

Assay Procedure

For detailed procedural information, refer to the system operating instructions or to the online help system.

Procedural Notes

Calculations

For detailed information about how the system calculates results, refer to the system operating instructions or to the online help system.

The system reports serum ferritin results in ng/mL (mass units) or pmol/L (SI units), depending on the units defined when setting up the assay. The conversion formula is
1 ng/mL = 2.20 pmol/L.

Dilutions

- Samples with ferritin levels greater than 1650 ng/mL (3630 pmol/L) must be diluted and retested to obtain accurate results.
- Patient samples can be automatically diluted by the system or prepared manually.

- For automatic dilutions, ensure that ADVIA Centaur Multi-Diluent 1 is loaded and set the system parameters as follows:

  Dilution point: ≤ 1650 ng/mL (3630 pmol/L)

  Dilution factor: 2, 5, 10

  For detailed information about automatic dilutions, refer to the system operating instructions or to the online help system.
- Manually dilute the patient samples when patient results exceed the linearity of the assay using automatic dilution, or when laboratory protocol requires manual dilution.
- Use Multi-Diluent 1 to manually dilute patient samples, and then load the diluted sample in the sample rack, replacing the undiluted sample.
- Ensure that results are mathematically corrected for dilution. If a dilution factor is entered when scheduling the test, the system automatically calculates the result.

High Dose Hook Effect

Patient samples with high ferritin levels can cause a paradoxical decrease in the RLUs (high dose hook effect). In this assay, patient samples with ferritin levels as high as 80,000 ng/mL (176,000 pmol/L) will assay greater than 1650 ng/mL (3630 pmol/L).

Disposal

Dispose of hazardous or biologically contaminated materials according to the practices of your institution. Discard all materials in a safe and acceptable manner, and in compliance with all federal, state, and local requirements.

Limitations

Serum ferritin values are elevated in the presence of the following conditions and do not reflect actual body iron stores:[1,6]

- inflammation
- significant tissue destruction
- liver disease
- malignancies such as acute leukemia and Hodgkin's disease
- therapy with iron supplements

Heterophilic antibodies in human serum can react with reagent immunoglobulins, interfering with *in vitro* immunoassays.[7] Patients routinely exposed to animals or to animal serum products can be prone to this interference and anomalous values may be observed. Additional information may be required for diagnosis.

Serum specimens that are . . .	Have an insignificant effect on the assay up to . . .
hemolyzed*	900 mg/dL of hemoglobin
lipemic	2000 mg/dL of triglycerides
icteric	60 mg/dL of bilirubin

* Avoid assaying grossly hemolyzed samples because the release of intracellular ferritin can cause elevated results.

Expected Results

The expected results for the ACS:180® Ferritin assay were previously established. In clinical studies, the following values for apparently healthy male and female subjects with normal liver function enzyme tests, bilirubin, and serum iron tests, were determined:

		Mean		95th Percentile Range	
Category	N	(ng/mL)	(pmol/L)	(ng/mL)	(pmol/L)
Normal Males	142	94	207	22–322	48–708
Normal Females	134	46	101	10–291	22–640

The following values for patients with several diagnosed conditions were determined:

		Mean		Total Observed Range	
Category	N	(ng/mL)	(pmol/L)	(ng/mL)	(pmol/L)
Iron Deficiency	60	11.6	26	0.68–34.5	1.5–76
Other Anemias	7	610.8	1344	13.0–1390.8	29–3060
Iron Overload	44	1899.6	4178	334.6–8573.0	736–18,861
Renal Dialysis	31	312.3	687	31.3–1321.2	68.9–2907
Chronic Liver Disease	34	1967.1	4328	7.9–12,826.0	17–28,217

These results were confirmed for the ADVIA Centaur Ferritin assay by analyzing 277 serum samples in the range of 2.6 to 1602 ng/mL (5.7 to 3524.4 pmol/L). Refer to *Method Comparison.*

As with all *in vitro* diagnostic assays, each laboratory should determine its own reference range(s) for the diagnostic evaluation of patient results.[8]

Performance Characteristics

Specificity

The cross-reactivity of the ADVIA Centaur Ferritin assay with human liver ferritin was determined by adding different levels of crystalline liver ferritin to four samples containing endogenous ferritin. The ferritin level in the samples was then determined.

Sample	1	2	3	4
Endogenous Ferritin Value (ng/mL)	55.3	116.3	431.8	747.3
Liver Ferritin Added (ng/mL)	262.0	262.0	262.0	262.0
Expected Value (ng/mL)	317.3	378.3	693.8	1009.3
Observed Value (ng/mL)	319.0	375.2	731.4	1034.9
% Recovery*	101	99	114	109

* Mean % recovery or cross-reactivity is 105.8%.

Interference testing was determined according to NCCLS Document EP7-P.[9]

Sensitivity and Assay Range

The ADVIA Centaur Ferritin assay measures ferritin concentrations up to 1650 ng/mL (3630 pmol/L) with a minimum detectable concentration (analytical sensitivity) of 0.5 ng/mL (1 pmol/L). Analytical sensitivity is defined as the concentration of ferritin that corresponds to the RLUs that are two standard deviations greater than the mean RLUs of 20 replicate determinations of the Ferritin zero standard.

Method Comparison

For 277 serum samples in the range of 2.6 to 1602 ng/mL (5.7 to 3524.4 pmol/L), the relationship between the ADVIA Centaur Ferritin assay and the ACS:180 Ferritin assay is described by the equation:

ADVIA Centaur Ferritin = 0.96 (ACS:180 Ferritin) – 2.58 ng/mL

Correlation coefficient (r) = 0.99

Dilution Recovery

Five human serum samples in the range of 1450 to 1583 ng/mL (3190.0 to 3482.6 pmol/L) of ferritin were diluted 1:2, 1:4, 1:8, and 1:16 with Multi-Diluent 1 and assayed for recovery and parallelism. The recoveries ranged from 82.9% to 113.2% with a mean of 97.0%.

Sample	Dilution	Observed (ng/mL)	Expected (ng/mL)	Observed (pmol/L)	Expected (pmol/L)	Recovery %
1	—	1501		3302.2		
	1:2	700	750.5	1540.0	1651.1	93.3
	1:4	380	375.3	836.0	825.7	101.3
	1:8	190	187.6	418.0	412.7	101.3
	1:16	95	93.8	209.0	206.4	101.3
	Mean					99.3
2	—	1450		3190.0		
	1:2	712	725.0	1566.4	1595.0	98.2
	1:4	331	362.5	728.2	797.5	91.3
	1:8	173	181.3	380.6	398.9	95.4
	1:16	80	90.6	176.0	199.3	88.3
	Mean					93.3
3	—	1384		3044.8		
	1:2	783	692.0	1722.6	1552.4	113.2
	1:4	371	346.0	816.2	761.2	107.2
	1:8	188	173.0	413.6	380.6	108.7
	1:16	96	86.5	211.2	190.3	111.0
	Mean					110.0
4	—	1583		3482.6		
	1:2	725	791.5	1595.0	1741.3	91.6
	1:4	349	395.7	767.8	870.5	88.2
	1:8	175	197.8	385.0	435.2	88.5
	1:16	82	98.9	180.4	217.6	82.9
	Mean					87.8
5	—	1499		3297.8		
	1:2	695	749.5	1529.0	1648.9	92.7
	1:4	363	374.7	798.6	824.3	96.9
	1:8	181	187.4	398.2	412.3	96.6
	1:16	86	93.6	189.2	205.9	91.9
	Mean					94.5
Mean						**97.0**

221

Spiking Recovery

Varying amounts of ferritin were added to five samples with endogenous ferritin levels of 40.6 to 415.5 ng/mL (89.3 to 914.1 pmol/L). The recoveries ranged from 87.6% to 110.0% with a mean of 95.5%.

Sample	Amount Added (ng/mL)	Observed (ng/mL)	Amount Added (pmol/L)	Observed (pmol/L)	Recovery %
1	—	40.6	—	89.3	
	48.3	97.8	106.3	215.2	110.0
	181.2	219.1	398.6	482.0	98.8
	358.2	378.8	788.0	833.4	95.0
	712.4	751.8	1567.3	1654.0	99.8
	Mean				100.9
2	—	99.7	—	219.3	
	53.4	154.7	117.5	340.3	101.1
	186.2	265.4	409.6	583.9	92.8
	363.3	412.8	799.3	908.2	89.2
	717.5	769.1	1578.5	1692.0	94.1
	Mean				94.3
3	—	201.1	—	442.4	
	63.2	263.0	139.0	578.6	99.5
	196.0	347.7	431.2	764.9	87.6
	373.1	523.0	820.8	1150.6	91.1
	727.3	874.4	1600.1	1923.7	94.2
	Mean				93.1
4	—	270.6	—	595.3	
	70.4	339.8	154.9	747.6	99.7
	203.2	425.8	447.0	936.8	89.9
	380.3	617.1	836.7	1357.6	94.8
	734.5	902.7	1615.9	1985.9	89.8
	Mean				93.6
5	—	415.5	—	914.1	
	85.3	508.8	187.7	1119.4	101.6
	218.1	607.1	479.8	1335.6	95.8
	395.2	760.6	869.4	1673.3	93.8
	749.3	1062.0	1648.5	2336.4	91.2
	Mean				95.6
Mean					**95.5**

Precision

Six samples were assayed 6 times, in each of 12 runs, on 3 systems, (n = 72 for each sample), over a period of 2 days. The following results were obtained:

Mean (ng/mL)	Mean (pmol/L)	Within-run % CV	Run-to-run % CV	Total % CV
10.8	23.76	2.6	2.7	3.7
39.6	87.12	2.5	5.4	6.0
65.5	144.10	2.3	4.8	5.3
142.4	313.28	2.1	4.2	4.7
327.2	719.84	2.7	4.0	4.8
929.6	2045.12	3.0	3.7	4.8

Standardization

The ADVIA Centaur Ferritin assay standardization is traceable to World Health Organization 2nd International Standard (WHO 80/578). A comparison using 100 samples gave the following relationship:

$$\text{WHO} = 0.97\ (\text{ADVIA Centaur Ferritin}) - 1.8\ \text{ng/mL},\ r = 0.99$$

Assigned values for calibrators are traceable to this standardization.

Technical Assistance

For customer support, please contact your local technical support provider or distributor.

www.siemens.com/diagnostics

References

1. Miale JB. Laboratory medicine: hematology. St. Louis: CV Mosby, 1982. p.388-415.
2. Schreiber WE. Iron, porphyrin, and bilirubin metabolism. In: Kaplan LA, Pesce AJ, editors. Clinical chemistry: theory, analysis, and correlation. 2nd ed. St. Louis: CV Mosby, 1989. p.496–511.
3. Vander AJ, Sherman JH, Luciano DS. Human physiology: the mechanisms of body function. New York: McGraw-Hill Inc., 1985. p.475.
4. Reagent Water Technical Bulletin. Siemens Healthcare Diagnostics, 107060.
5. National Committee for Clinical Laboratory Standards. Procedures for the handling and processing of blood specimens; second edition; approved guideline. NCCLS Document H18-A2; Wayne (PA): NCCLS; 1999 Oct. 40p.
6. Franco CD. Ferritin. In: Kaplan LA, Pesce AJ, editors. Methods in clinical chemistry. 2nd ed. St. Louis: CV Mosby, 1987. p.1240–2.
7. Boscato LM, Stuart MC. Heterophilic antibodies: a problem for all immunoassays. Clin Chem 1988;34:27–33.
8. National Committee for Clinical Laboratory Standards. How to define, determine, and utilize reference intervals in the clinical laboratory; approved guideline. NCCLS Document C28-A. Wayne (PA): NCCLS; 1995 June 59p.
9. National Committee for Clinical Laboratory Standards. Interference testing in clinical chemistry. Proposed Guideline. NCCLS document EP7-P. Wayne (PA):NCCLS;1986.

ADVIA Centaur, ReadyPack, and ACS:180 are trademarks of Siemens Healthcare Diagnostics.

© 2008 Siemens Healthcare Diagnostics Inc. All rights reserved.

US Pats 4,745,181; 4,918,192; 5,110,932; 5,609,822; 5,788,928

Origin: US

Siemens Healthcare Diagnostics Inc.
Tarrytown, NY 10591-5097 USA

EC REP Siemens Healthcare Diagnostics Ltd.
Sir William Siemens Sq.
Frimley, Camberley, UK GU16 8QD

Siemens Healthcare
Diagnostics Pty Ltd
885 Mountain Highway
Bayswater Victoria 3153
Australia

シーメンスヘルスケア・
ダイアグノスティクス株式会社
東京都品川区東五反田 3－20－14
Siemens Healthcare Diagnostics
輸入

223

Folate (FOL)

CE

Assay Summary

Sample Type	***Serum, Red Blood Cells***
Sample Volume	***150 µL***
Calibrator	***FOL***
Sensitivity and Assay Range	***0.35–24 ng/mL (0.79–54.36 nmol/L)***

Contents

REF	Contents	Number of Tests
06891541 (124838)	5 ReadyPack® primary reagent packs containing ADVIA Centaur® FOL Lite Reagent, Solid Phase, and FOL Binding Protein ADVIA Centaur FOL Master Curve card 2 vials of lyophilized Low FOL Calibrator CAL L 2 vials of lyophilized High FOL Calibrator CAL H Barcode labels for the calibrators Calibrator Assigned Value card	500
or		
06367974 (118551)	1 ReadyPack primary reagent pack containing ADVIA Centaur FOL Lite Reagent, Solid Phase, and FOL Binding Protein ADVIA Centaur FOL Master Curve card 2 vials of lyophilized Low FOL Calibrator CAL L 2 vials of lyophilized High FOL Calibrator CAL H Barcode labels for the calibrators Calibrator Assigned Value card	100

For a definition of symbols used in product labeling, refer to *Understanding the Symbols* in Appendix D of the Assay Guide.

Intended Use

For *in vitro* diagnostic use in the quantitative determination of folate in serum or red blood cells using the ADVIA Centaur and ADVIA Centaur XP systems.

Materials Required but Not Provided

REF	Description	Contents
05171359 (124974)	ADVIA Centaur FOL DTT/Releasing Agent REL (600 tests)	3 vials of DTT 3 vials of Releasing Agent 2 sheet of pack seals 3 empty ReadyPack ancillary reagent packs
03395373	Ancillary Probe Wash 1 APW 1	2 ReadyPack ancillary reagent packs containing 25 mL per pack

Optional Reagents

REF	Description	Contents
07824546 (125500)	ADVIA Centaur FOL Diluent [DIL]	2 ReadyPack ancillary reagent packs containing 10 mL/pack
08651025 (118853)	FOL Diluent [DIL]	50 mL/vial
02343590 (124975)	FOL Ascorbic Acid [ASCORBIC ACID] (lyophilized)/ Ascorbic Acid Diluent [DIL]	4 x 30 mL/vial
120302	FOL Master Curve Material	6 x 1 mL

Summary and Explanation of the Test

Folates are compounds of pteroylglutamic acid (PGA) that function as coenzymes in metabolic reactions involving the transfer of single-carbon units from a donor to a recipient compound. Folate, with vitamin B_{12}, is essential for DNA synthesis, which is required for normal red blood cell maturation.[1] Humans obtain folate from dietary sources including fruits, green and leafy vegetables, yeast, and organ meats.[2] Folate is absorbed through the small intestine and stored in the liver.

Low folate intake, malabsorption as a result of gastrointestinal diseases, pregnancy, and drugs such as phenytoin are causes of folate deficiency.[3] Folate deficiency is also associated with chronic alcoholism.[4] Folate and vitamin B_{12} deficiency impair DNA synthesis, causing macrocytic anemias. These anemias are characterized by abnormal maturation of red blood cell precursors in the bone marrow, the presence of megaloblasts, and decreased red blood cell survival.[1]

Since both folate and vitamin B_{12} deficiency can cause macrocytic anemia, appropriate treatment depends on the differential diagnosis of the deficiency. Serum folate measurement provides an early index of folate status.[2] However, folate is much more concentrated in red blood cells than in serum so the red blood cell folate measurement more closely reflects tissue stores.[4] Red blood cell folate concentration is considered the most reliable indicator of folate status.[2]

Assay Principle

The ADVIA Centaur Folate assay is a competitive immunoassay using direct chemiluminescent technology. Folate in the patient sample competes with acridinium ester-labeled folate in the Lite Reagent for a limited amount of biotin-labeled folate binding protein. Biotin-labeled folate binding protein binds to avidin that is covalently coupled to paramagnetic particles in the Solid Phase. In the ADVIA Centaur Folate assay the sample is pretreated to release the folate from endogenous binding proteins in the sample.

The system automatically performs the following actions:

- Dispenses 150 µL of sample into a cuvette.
- Dispenses 50 µL of DTT/Releasing Agent.
- Dispenses 100 µL of Folate Binding Protein and 200 µL of Solid Phase and incubates for 5.0 minutes at 37°C.
- Dispenses 100 µL of Lite Reagent and incubates for 2.5 minutes at 37°C.
- Separates, aspirates, and washes the cuvettes with reagent water.[5]
- Dispenses 300 µL each of Acid Reagent and Base Reagent to initiate the chemiluminescent reaction.
- Reports results according to the selected option, as described in the system operating instructions or in the online help system.

225

An inverse relationship exists between the amount of folate present in the patient sample and the amount of relative light units (RLUs) detected by the system.

Specimen Collection and Handling

NOTE: Folates are light sensitive. Minimize exposure to light during sample handling and storage.[6]

Serum is the recommended sample type for this assay. EDTA plasma was found to be unstable and is not recommended. Whole blood (heparin or EDTA) is required to measure red cell folate using the ADVIA Centaur Folate assay. Refer to *Collection Tube Comparison*.

The following recommendations for handling and storing blood samples are furnished by the Clinical and Laboratory Standards Institute (CLSI, formerly NCCLS):[7]

- Collect all blood samples observing universal precautions for venipuncture.
- Allow serum samples to clot adequately before centrifugation.
- Keep tubes stoppered and upright at all times.
- Store serum samples at room temperature for no longer than 8 hours.
- Tightly cap and refrigerate specimens at 2° to 8°C if the assay is not completed within 8 hours.
- Freeze serum samples at or below -20°C if the assay is not completed within 48 hours.
- Freeze serum samples only once and mix thoroughly after thawing. Frozen specimens can remain frozen up to 30 days in non-frost free freezers. If serum samples will be stored for longer than 30 days then they must be frozen at or below -80°C.

Before placing samples on the system, ensure that samples have the following characteristics:

- Samples are free of fibrin or other particulate matter.
- Samples are free of bubbles.

If testing is not done within 24 hours for whole blood specimens, determine the hematocrit and freeze the whole blood specimen or hemolysate. Frozen whole blood specimens can be stored at -20°C in a non-frost free freezer for up to 2 months. Sample hemolysates prepared with the reconstituted Folate Ascorbic Acid can be stored at -20°C in a non-frost free freezer for up to 3 months. Freeze specimens only once and mix thoroughly after thawing.

For red blood cell folate determinations, prepare the red blood cell hemolysate as described in *Preparing the Red Blood Cell Hemolysate*.

Preparing the Red Blood Cell Hemolysate

NOTE: Folates are light sensitive. Minimize exposure to light during sample handling and storage.[6]

1. Reconstitute the Folate Ascorbic Acid by adding the contents of one vial of Folate Ascorbic Acid Diluent to the lyophilized Folate Ascorbic Acid.
2. Let the reconstituted mixture stand at room temperature for 15 minutes and mix by inverting the bottle occasionally.
3. Collect the sample in a tube containing heparin or EDTA.
4. Invert the sample several times to mix.
5. Determine and record the hematocrit.
6. Dispense 1.0 mL of reconstituted Folate Ascorbic Acid into a test tube or sample cup.
7. Add 50 µL of the sample into the Folate Ascorbic Acid.

8. Cap and invert the tube several times or vortex gently to mix. Avoid foaming.
9. Let the hemolysate stand protected from light, at room temperature, **for a minimum of 90 minutes, but less than 3 hours.**
10. **Do not mix the hemolysate again before placing the sample on the system.**

NOTE: Do not dilute the RBC hemolysate. Freeze the hemolysate at or below -20°C immediately if testing cannot be completed within 4 hours from the time you finish preparing the hemolysate. Hemolysates can be stored at or below -20°C in a non-frost free freezer for up to 3 months.

If the hemolysate is frozen, thaw the hemolysate and mix it by inverting the tube several times. Let the hemolysate stand for 30 minutes at room temperature before testing. Test the hemolysate within 3 hours after thawing.

For information about running the ADVIA Centaur Folate assay on the system, refer to the system operating instructions or to the online help system.

Reagents

Store the reagents upright at 2–8°C.
Mix all primary reagent packs by hand before loading them onto the system. Visually inspect the bottom of the reagent pack to ensure that all particles are dispersed and resuspended. For detailed information about preparing the reagents for use, refer to Appendix C, *Handling Reagents*.

Reagent Pack	Reagent	Volume	Ingredients	Storage	Stability
ADVIA Centaur FOL ReadyPack primary reagent pack	Lite Reagent	10.0 mL/ reagent pack	folate labeled with acridinium ester (~9.8 ng/mL) in buffer with bovine serum albumin, sodium azide (0.1%), and preservatives	2–8°C	until the expiration date on the pack label. For onboard stability, refer to *Onboard Stability and Calibration Interval.*
	Solid Phase	20.0 mL/ reagent pack	purified avidin (~20 µg/mL) covalently coupled to paramagnetic particles in buffer with human serum albumin and preservatives	2–8°C	until the expiration date on the pack label. For onboard stability, refer to *Onboard Stability and Calibration Interval.*
	Folate Binding Protein	10.0 mL/ reagent pack	purified folate binding protein (~1.0 µg/mL) covalently coupled to biotin in buffer with bovine serum albumin and preservatives	2–8°C	until the expiration date on the pack label. For onboard stability, refer to *Onboard Stability and Calibration Interval.*
FOL DTT/ REL ReadyPack ancillary reagent pack	DTT/Releasing Agent		Refer to *Preparing DTT/ Releasing Agent*	2–8°C	108 hours in an ancillary reagent pack
	DTT	8.0 mL/ vial	dithiothreitol (~95 mg/mL) in liquid form	2–8°C	until the expiration date on the vial label
	Releasing Agent	4.0 mL/ vial	sodium hydroxide (~1.1N)	2–8°C	until the expiration date on the vial label
FOL calibrator vials	Calibrators	3.0 mL/ vial	after reconstitution, low or high levels of N-5-methyl-tetrahydrofolic acid in buffer with human serum albumin with sodium azide (< 0.1%) and preservatives	2–8°C 2–8°C ≤ -20°C	lyophilized–until the expiration date on the vial label or reconstituted–7 days or reconstituted–28 days or onboard–8 hours

Reagent Pack	Reagent	Volume	Ingredients	Storage	Stability
FOL [ASCORBIC ACID]/ FOL Ascorbic Acid [DIL] vials	Folate Ascorbic Acid/Folate Ascorbic Acid Diluent	30.0 mL/ vial	lyophilized ascorbic acid (~0.30 g/vial)/bovine serum albumin in buffer with sodium azide (< 0.1%) and preservatives	2–8°C	until the expiration date on the vial or 30 days reconstituted
ADVIA Centaur FOL [DIL] ReadyPack ancillary reagent pack	Folate Diluent	10.0 mL/ reagent pack	human plasma with sodium azide (< 0.1%) and preservatives	2–8°C	until the expiration date on the pack label or 28 consecutive days after accessing the ancillary reagent pack
ADVIA Centaur [APW] [1] ReadyPack ancillary reagent pack*	Probe Wash	25.0 mL/ reagent pack	0.4 N sodium hydroxide	2–8°C	until the expiration date on the pack label or 14 consecutive days after accessing the ancillary reagent pack

R34, S24/25, S26 S36/37/39 S45 **Corrosive!** Causes burns. Avoid contact with skin and eyes. In case of contact with eyes, rinse immediately with plenty of water and seek medical advice. Wear suitable protective clothing, gloves and eye/face protection. In case of accident or if you feel unwell, seek medical advice immediately (show the label where possible). **Contains:** sodium hydroxide; Releasing Agent

R22 S28 **Harmful!** Harmful if swallowed. After contact with skin, wash immediately with plenty of soap and water. **Contains:** sodium azide; Lite Reagent, Calibrators

CAUTION! POTENTIAL BIOHAZARD: Contains human source material. While each human serum or plasma donor unit used in the manufacture of this product was tested by FDA-approved methods and found nonreactive for hepatitis B surface antigen (HBsAg), antibody to hepatitis C (HCV), and antibody to HIV-1/2, all products manufactured using human source material should be handled as potentially infectious. Because no test method can offer complete assurance that hepatitis B or C viruses, HIV, or other infectious agents are absent, these products should be handled according to established good laboratory practices.[8-10]

CAUTION: This device contains material of animal origin and should be handled as a potential carrier and transmitter of disease.

NOTE: Sodium azide can react with copper and lead plumbing to form explosive metal azides. On disposal, flush reagents with a large volume of water to prevent the buildup of azides, if disposal into a drain is in compliance with federal, state, and local requirements.

For *in vitro* diagnostic use.

Preparing DTT/Releasing Agent

Use this procedure to prepare the DTT/Releasing Agent.

NOTE: Careful preparation of DTT/Releasing Agent is required to obtain accurate and consistent results. The absolute amount of DTT delivered for each test can affect results. The prepared DTT/Releasing Agent must be used within 108 hours after placing in a disposable ancillary reagent pack.

1. Carefully transfer the contents of one vial of Releasing Agent into one vial of DTT. For convenience, the Releasing Agent can be poured or transferred by pipette into the DTT vial. This 12 mL volume is sufficient to perform 200 tests.

   NOTE: This volume of DTT/Releasing Agent is required for each disposable ancillary reagent pack. If you need to perform more than 200 tests, you must prepare additional DTT/Releasing agent as described in step 1 and add the contents to a second disposable ancillary reagent pack. The system will not aspirate more than 200 tests per ancillary reagent pack.

2. Firmly screw the cap on the DTT vial and invert the vial several times to mix.

3. Pour or pipette the entire contents of the DTT vial into the disposable ancillary reagent pack provided.
4. Place a pack seal on the disposable ancillary reagent pack. Ensure that the seal is centered over the opening of the pack, and press firmly on the adhesive portion of the seal.

Using Barcode Labels

DTT/Releasing Agent barcode labels are lot number specific. Do not use barcode labels from one lot of DTT/Releasing Agent with any other lot of DTT/Releasing Agent.

Loading Reagents

Ensure that the system has sufficient primary and ancillary reagent packs. For detailed information about preparing the system, refer to the system operating instructions or to the online help system.

Mix all primary reagent packs by hand before loading them onto the system. Visually inspect the bottom of the reagent pack to ensure that all particles are dispersed and resuspended. For detailed information about preparing the reagents for use, refer to Appendix C, *Handling Reagents*.

Load the ReadyPack reagent packs in the primary reagent area using the arrows as a placement guide. The system automatically mixes the primary reagent packs to maintain homogeneous suspension of the reagents. Load the Folate DTT/Releasing Agent ReadyPack reagent pack in the ancillary reagent entry. For detailed information about loading reagents, refer to the system operating instructions or to the online help system.

If automatic dilution of a sample is required, load ADVIA Centaur Folate Diluent in the ancillary reagent entry.

NOTE: The Folate Calibrators provided in this kit are matched to the Solid Phase and Lite Reagent. Do not mix Folate Calibrator lots with different lots of Solid Phase and Lite Reagent.

Onboard Stability and Calibration Interval

Onboard Stability	Calibration Interval
28 days	7 days

Additionally, the ADVIA Centaur Folate assay requires a two-point calibration:

- when changing lot numbers of primary reagent packs
- when replacing system components
- when quality control results are repeatedly out of range

NOTE:

- Discard the primary reagent packs at the end of the onboard stability interval.
- Do not use reagents beyond the expiration date.

Master Curve Calibration

The ADVIA Centaur Folate assay requires a Master Curve calibration when using a new lot number of Lite Reagent, Solid Phase, and Folate Binding Protein. For each new lot number of Lite Reagent, Solid Phase, and Folate Binding Protein, use the barcode reader or keyboard to enter the Master Curve values on the system. The Master Curve card contains the Master Curve values. For detailed information about entering calibration values, refer to the system operating instructions or to the online help system.

Preparing Calibrators

1. Add 3.0 mL of reagent water[5] into each calibrator vial using a volumetric or precision pipet.
2. Let the calibrators stand for 15 to 20 minutes at room temperature to allow the lyophilized material to dissolve.
3. Gently swirl and invert the vials until homogeneous.

   Aliquots of reconstituted calibrators may be stored at 2° to 8°C or ≤ -20°C. For storage information, refer to *Reagents*.

Using Barcode Labels

Calibrator barcode labels are lot number specific. Do not use barcode labels from one lot of calibrators with any other lot of calibrators.

Use the Folate Calibrator barcode labels to label the Low and High Calibrator sample cups when performing the Folate assay. Place the barcode label on the sample cup so that the readable characters on the side of the label are vertical on the sample cup.

Defining Ratio and Off-System Tests for Red Blood Cell Folate (RBC Folate)

For more information about entering the off-system and ratio test definitions, refer to the system operating instructions or to the online help system.

You may define any name for the off-system test. Ensure that you use the same name in the ratio definition.

1. Enter the off-system test name for hematocrit, for example, HCT or HCRIT.
2. Save the changes.
3. Enter the ratio test name, for example, rbcFOL.
4. Enter the ratio test definition, for example, FOLATE x 2100/HCT using the following variables:

   a = Tests, FOL

   b = Variable, 0

   c = Tests, HCT

   d = Variable, 2100
5. Save the changes.

Quality Control

For detailed information about entering quality control values, refer to the system operating instructions or to the online help system.

To monitor system performance and chart trends, as a minimum requirement, two levels of quality control material should be assayed on each day that samples are analyzed. Quality control samples should also be assayed when performing a two-point calibration. Treat all quality control samples the same as patient samples.

Siemens Healthcare Diagnostics recommends the use of commercially available quality control materials with at least 2 levels (low and high). A satisfactory level of performance is achieved when the analyte values obtained are within the Acceptable Control Range for the system or within your range, as determined by an appropriate internal laboratory quality control scheme.

If the quality control results do not fall within the Expected Values or within the laboratory's established values, do not report results. Take the following actions:

- Verify that the materials are not expired.
- Verify that required maintenance was performed.
- Verify that the assay was performed according to the instructions for use.
- Rerun the assay with fresh quality control samples.
- If necessary, contact your local technical support provider or distributor for assistance.

Sample Volume

This assay requires 150 µL of sample for a single determination. This volume does not include the unusable volume in the sample container or the additional volume required when performing duplicates or other tests on the same sample. For detailed information about determining the minimum required volume, refer to Sample Volume Requirements in the ADVIA Centaur Reference Manual.

Assay Procedure

For detailed procedural information, refer to the system operating instructions or to the online help system.

Procedural Notes

Calculations

For detailed information about how the system calculates results, refer to the system operating instructions or to the online help system.

The system reports serum folate results in ng/mL (common units) or nmol/L (SI units), depending on the units defined when setting up the assay. The conversion formula is 1 ng/mL = 2.265 nmol/L.

Red Blood Cell Folate

Use this procedure to manually calculate RBC folate values, or program the system to calculate RBC folate values as described in the system operating instructions or in the online help system. Refer to *Defining Ratio and Off-System Tests for Red Blood Cell Folate (RBC Folate)*.

1. Multiply the folate result for the hemolysate by 21 (a 1:21 dilution was made when preparing the RBC hemolysate). This value represents the folate concentration of whole blood in ng/mL.
2. Divide this result by the hematocrit, and multiply by 100 to adjust for the hematocrit, which is a percentage.

$$\text{RBC folate (ng/mL)} = \frac{\text{(Folate result for hemolysate, ng/mL)} \times 21}{\text{hematocrit}} \times 100$$

Example:

Hemolysate folate value = 5.7 ng/mL

Hematocrit = 43

$$\text{RBC folate (ng/mL)} = \frac{5.7 \times 21}{43} \times 100 = 278$$

Corrected Red Blood Cell Folate

In most cases the serum folate values are very small compared to red blood cell folate values. However, occasionally serum folate values can be elevated. If the serum folate value is high and the red blood cell folate concentration is low, calculate the corrected RBC folate value according to the following equation:

$$\text{Corrected RBC folate (ng/mL)} = \underset{\text{(ng/mL)}}{\text{RBC folate}} - \underset{\text{(ng/mL)}}{\text{serum folate}} \left[\frac{(100 - \text{hematocrit})}{\text{hematocrit}}\right]$$

Example:

RBC folate = 210 ng/mL

Serum folate = 22 ng/mL

Hematocrit of the patient = 41

$$\text{Corrected RBC folate (ng/mL)} = 210 - 22 \left[\frac{(100 - 41)}{41}\right] = 210 - 32 = 178$$

Dilutions

- Serum samples with folate levels greater than 24 ng/mL (54.36 nmol/L) must be diluted and retested to obtain accurate results.
- Patient samples can be automatically diluted by the system or prepared manually.
- For automatic dilutions, ensure that ADVIA Centaur Folate Diluent is loaded and set the system parameters as follows:

  Dilution point: ≤ 24 ng/mL (54.36 nmol/L)

  Dilution factor: 2, 5

  For detailed information about automatic dilutions, refer to the system operating instructions or to the online help system.
- Manually dilute the patient samples when patient results exceed the linearity of the assay using automatic dilution, or when laboratory protocol requires manual dilution.
- Use Folate Diluent to manually dilute patient samples, and then load the diluted sample in the sample rack, replacing the undiluted sample.
- Ensure that results are mathematically corrected for dilution. If a dilution factor is entered when scheduling the test, the system automatically calculates the result.
- Do not dilute the RBC hemolysate.

Disposal

Dispose of hazardous or biologically contaminated materials according to the practices of your institution. Discard all materials in a safe and acceptable manner, and in compliance with all federal, state, and local requirements.

Limitations

Hemolysis significantly increases folate values due to the high folate concentrations in red blood cells. Methotrexate and leucovorin interfere with folate measurement because these drugs cross-react with folate binding proteins.

Do not pour the calibrators back into the vials after calibration because evaporation could occur, which may affect performance.

Dispose of any calibrator remaining in the sample cups after 8 hours.

Do not refill calibrator sample cups when the contents are depleted. If required, dispense fresh calibrators.

Serum specimens that are . . .	Have an insignificant effect on the assay up to . . .
Lipemic	2000 mg/dL of triglycerides
Icteric	20 mg/dL of bilirubin

Interference testing was determined according to CLSI Document EP7-A2.[11]

Expected Results

To determine the reference range for serum and RBC folate for the ADVIA Centaur Folate assay, data was obtained on 370 and 286 samples, respectively. The normal ranges are the inner 97.5% of the distribution of apparently healthy individuals and the deficient range represent the observed range. For sample results in the indeterminate range [3.38 to 5.38 ng/mL (7.64 to 12.19 nmol/L)], clinical results and other diagnostic protocols should supplement folate results.

Category	N	Median (ng/mL)	Range (ng/mL)	Median (nmol/L)	Range (nmol/L)
Serum folate					
Deficient†	65	1.54	0.35 to 3.37	3.49	0.79 to 7.63
Indeterminate‡			3.38 to 5.38		7.64 to 12.19
Normal	305	12.51	> 5.38	28.34	> 12.19
RBC folate					
Normal	286	425	280 to 791	963	634 to 1792

† Diagnosed by bone and/or peripheral blood smear pathology and other criteria including:

- megaloblastic anemia
- folate deficient diet
- malabsorption
- alcoholism
- Tropical Sprue
- abnormal blood parameters including mean corpuscular volume (MCV), mean corpuscular hemoglobin (MCH), and hematocrit (HCT).

‡ Range between deficient and normal range.

Laboratories should consider these reference ranges as guidelines only. The data was obtained on apparently healthy males and females from the United States. Due to population demographic factors, diet and assay methods, each laboratory should determine its own reference range(s) for the diagnostic evaluation of patient results.[12]

Performance Characteristics

Sensitivity and Assay Range

The ADVIA Centaur Folate assay measures folate concentrations up to 24 ng/mL (54.36 nmol/L) with a minimum detectable concentration (analytical sensitivity) of 0.35 ng/mL (0.79 nmol/L). Analytical sensitivity is defined as the concentration of folate that corresponds to the RLUs that are two standard deviations less than the mean RLUs of 20 replicate determinations of the Folate zero standard.

Method Comparison

For 246 serum samples the relationship between the ADVIA Centaur Folate assay [samples range from 0.46 to 24 ng/mL (1.04 to 54.36 nmol/L)] and an alternate method is described by the equation:

ADVIA Centaur Folate = 1.02 (alternate chemiluminescent method) - 0.40 ng/mL

Correlation coefficient (r) = 0.941

For 313 red blood cell samples in the range of 15.0 to 1855 ng/mL (33.97 to 4202 nmol/L), the relationship between the ADVIA Centaur Folate assay and an alternate method is described by the equation:

ADVIA Centaur RBC Folate = 1.04 (alternate chemilunescent method) + 50.0 ng/mL

Correlation coefficient (r) = 0.911

Dilution Recovery

Five human serum samples in the range of 17.54 to 23.35 ng/mL (39.72 to 52.89 nmol/L) of folate were diluted on-board 1:2 and 1:5 with Folate Diluent and assayed for recovery and parallelism. The recoveries ranged from 93.8% to 108.5% with a mean of 101.0%.

Sample	Dilution	Observed (ng/mL)	Expected (ng/mL)	Observed (nmol/L)	Expected (nmol/L)	Recovery %
1	—	23.35		52.89		
	1:2	11.07	11.67	25.07	26.44	94.9
	1:5	4.38	4.67	9.92	10.58	93.8
	Mean					94.3
2	—	17.54		39.73		
	1:2	9.15	8.77	20.72	19.86	104.3
	1:5	3.70	3.51	8.38	7.95	105.5
	Mean					104.9
3	—	19.98		45.25		
	1:2	10.10	9.99	22.88	22.62	101.1
	1:5	4.19	4.00	9.49	9.05	104.7
	Mean					102.9
4	—	18.45		41.79		
	1:2	9.20	9.22	20.84	20.89	99.8
	1:5	3.48	3.69	7.88	8.36	94.3
	Mean					97.0
5	—	18.68		42.31		
	1:2	10.13	9.34	22.94	21.15	108.5
	1:5	3.86	3.74	8.74	8.46	103.2
	Mean					105.8
Mean						**101.0**

Spiking Recovery

Varying amounts of N-5-methyltetrahydrofolic acid were added to five samples with endogenous folate levels of 3.39 to 6.83 ng/mL (7.68 to 15.47 nmol/L). The recoveries ranged from 81.5% to 115.3% with a mean of 97.2%.

Sample	Amount Added (ng/mL)	Observed (ng/mL)	Amount Added (nmol/L)	Observed (nmol/L)	Recovery %
1	—	6.41	—	14.52	
	1.61	8.03	3.65	18.19	100.6
	3.22	9.55	7.29	21.63	97.5
	6.44	13.57	14.59	30.74	111.2
	9.66	17.55	21.88	39.75	115.3
	12.08	17.49	27.36	39.61	91.7
	Mean				103.3
2	—	3.39	—	7.68	
	4.49	7.11	10.17	16.10	82.8
	8.97	11.49	20.32	26.02	90.3
	13.46	15.41	30.49	34.90	89.3
	17.94	20.63	40.63	46.73	96.1
	Mean				89.6
3	—	6.03	—	13.66	
	4.49	9.69	10.17	21.95	81.5
	8.97	14.72	20.32	33.34	96.9
	13.46	18.45	30.49	41.79	92.3
	17.94	24.00	40.63	54.36	100.2
	Mean				92.7
4	—	5.20	—	11.78	
	4.49	9.55	10.17	21.63	96.9
	8.97	13.62	20.32	30.85	93.9
	13.46	17.87	30.49	40.48	94.1
	17.94	22.33	40.63	50.58	95.5
	Mean				95.1
5	—	6.83	—	15.47	
	4.49	11.83	10.17	26.79	111.4
	8.97	16.32	20.32	36.96	105.8
	13.46	20.06	30.49	45.44	98.3
	Mean				105.2
Mean					**97.2**

Precision

Four serum samples were assayed 9 times in 30 runs, on 6 systems (n = 270 for each sample), over a period of 5 days. The following results were obtained:

Mean (ng/mL)	Mean (nmol/L)	Within-run % CV	Run-to-run % CV	Total % CV
1.70	3.85	7.93	6.11	10.00
5.30	12.00	5.51	5.26	7.61
10.01	22.67	4.54	7.19	8.50
14.95	33.86	6.26	6.36	8.93

Four red blood cell samples were assayed 6 times in 16 runs, on 4 systems with 2 lots of reagents (n = 192 for each sample), over a period of 5 days. The following results were obtained:

Mean (ng/mL)	Mean (nmol/L)	Within-run % CV	Run-to-run % CV	Total % CV
124	281	8.57	5.90	10.40
243	550	5.75	4.86	7.53
429	972	5.14	4.27	6.68
585	1325	6.05	5.07	7.89

Collection Tube Comparison

Red Cell Folate

The red cell folate values from 13 donors were determined for blood collected in both EDTA and heparin tubes. Samples drawn in heparin tubes were on average 10% higher than samples drawn in EDTA tubes.

	EDTA (ng/mL)	EDTA (nmol/L)	Heparin (ng/mL)	Heparin (nmol/L)
Mean	594	1345	652	1477
Range	421 to 1098	954 to 2487	513 to 1179	1162 to 2670

Traceability of Standardization

The ADVIA Centaur Folate assay is traceable to an internal standard manufactured using highly purified material (N-5-methyl tetrahydrofolate). Assigned values for calibrators are traceable to this standardization.

Technical Assistance

For customer support, contact your local technical support provider or distributor.

www.siemens.com/diagnostics

References

1. Miale JB. Laboratory medicine: hematology. St. Louis: CV Mosby, 1982. p.416–40.
2. Brewster MA. Vitamins. In: Kaplan LA, Pesce AJ, editors. Clinical chemistry: theory, analysis, and correlation. 2nd ed. St. Louis: CV Mosby, 1989. p.543–68.
3. Steinkamp RC. Vitamin B12 and folic acid: clinical and pathophysiological considerations. In: Brewster MA, Naito HK, editors. Nutritional elements and clinical biochemistry. New York: Plenum Publishing Corp., 1980. p.169–240.
4. McNeely MD. Folic acid. In: Pesce AJ, Kaplan LA, editors. Methods in clinical chemistry. St. Louis: CV Mosby, 1987. p.539–42.
5. Reagent Water Technical Bulletin. Siemens Healthcare Diagnostics, 107060.
6. Mastropaolo W, Wilson M. Effect of Light on Serum B12 and Folate Stability. Clin Chem 1993;39(5):913.
7. Clinical and Laboratory Standards Institute (formerly NCCLS). *Procedures for the Handling and Processing of Blood Specimens; Approved Guideline - Third Edition.* Wayne, PA: Clinical and Laboratory Standards Institute; 2004. NCCLS Document H18-A3.
8. Centers for Disease Control. Update: Universal precautions for prevention of transmission of human immunodeficiency virus, hepatitis B virus and other bloodborne pathogens in healthcare settings. MMWR, 1988;37:377–82, 387–8.
9. Clinical and Laboratory Standards Institute (formerly NCCLS). *Protection of Laboratory Workers From Occupationally Acquired Infections; Approved Guideline - Third Edition.* Wayne, PA: Clinical and Laboratory Standards Institute; 2005. NCCLS Document M29-A3.
10. Federal Occupational Safety and Health Administration. Bloodborne Pathogens Standard. 29 CFR 1910.1030.

11. Clinical and Laboratory Standards Institute (formerly NCCLS). *Interference Testing in Clinical Chemistry; Approved Guideline - Second Edition.* Wayne, PA: Clinical and Laboratory Standards Institute; 2005. NCCLS document EP7-A2.
12. Clinical and Laboratory Standards Institute (formerly NCCLS). *How to Define and Determine Reference Intervals in the Clinical Laboratory; Approved Guideline - Second Edition.* Wayne, PA: Clinical and Laboratory Standards Institute; 2000. NCCLS Document C28-A2.

ADVIA Centaur and ReadyPack are trademarks of Siemens Healthcare Diagnostics.

© 2008 Siemens Healthcare Diagnostics Inc. All rights reserved.

US Pats 5,110,932; 5,241,070; 5,538,901; 5,609,822; 5,788,928

Origin: US

Siemens Healthcare Diagnostics Inc.
Tarrytown, NY 10591-5097 USA

EC REP Siemens Healthcare Diagnostics Ltd.
Sir William Siemens Sq.
Frimley, Camberley, UK GU16 8QD

Siemens Healthcare
Diagnostics Pty Ltd
885 Mountain Highway
Bayswater Victoria 3153
Australia

シーメンスヘルスケア・
ダイアグノスティクス株式会社
東京都品川区東五反田 3－20－14
Siemens Healthcare Diagnostics
輸入

FSH

CE

Assay Summary

Sample Type	***Serum***
Sample Volume	***100 µL***
Calibrator	***B***
Sensitivity and Assay Range	***0.3 – 200 mIU/mL (IU/L)***

Contents

REF	Contents	Number of Tests
01360521 (110756)	5 ReadyPack® primary reagent packs containing ADVIA Centaur® FSH Lite Reagent and Solid Phase ADVIA Centaur FSH Master Curve card	500
or		
04912924 (110755)	1 ReadyPack primary reagent pack containing ADVIA Centaur FSH Lite Reagent and Solid Phase ADVIA Centaur FSH Master Curve card	100

For a definition of symbols used in product labeling, please refer to *Understanding the Symbols* in Appendix D.

Intended Use

For *in vitro* diagnostic use in the quantitative determination of follicle-stimulating hormone (FSH) in serum using the ADVIA Centaur and ADVIA Centaur XP systems.

Materials Required But Not Provided

REF	Description	Contents
00652707	Calibrator B	6 vials of low calibrator CAL L 6 vials of high calibrator CAL H
or		
00649625	Calibrator B	2 vials of low calibrator CAL L 2 vials of high calibrator CAL H

Optional Reagents

REF	Description	Contents
07907174 (110313)	ADVIA Centaur Multi-Diluent 1 M-DIL 1	6 ReadyPack ancillary reagent packs containing 25 mL/pack
or		
07293184 (110312)	ADVIA Centaur Multi-Diluent 1 M-DIL 1	2 ReadyPack ancillary reagent packs containing 25 mL/pack
672177	Multi-Diluent 1 M-DIL 1	50 mL/vial
672418	FSH Master Curve Material	9 x 1 mL

238

Summary and Explanation of the Test

Follicle-stimulating hormone (FSH) is a glycoprotein hormone with two subunits. The alpha subunit is similar to those of luteinizing hormone (LH), human chorionic gonadotropin (hCG), and thyroid-stimulating hormone (TSH).

The beta subunit is different from those of the other glycoprotein hormones and confers its biochemical specificity.[1]

FSH is secreted by the anterior pituitary in response to gonadotropin-releasing hormone (GnRH) secreted by the hypothalamus.[2] In both males and females, FSH secretion is regulated by a balance of positive and negative feedback mechanisms involving the hypothalamic-pituitary axis, the reproductive organs, and the pituitary and sex steroid hormones.[3,4] FSH and LH play a critical role in maintaining the normal function of the male and female reproductive systems.

The following table shows the target tissues and actions of FSH in females and males:

Category	Target Tissues	Actions
females	ovarian follicles	stimulates follicle development and production of estradiol and other estrogens during the follicular phase of the menstrual cycle[1]
		acts synergistically with LH to cause ovulation[2]
males	Sertoli cells in the seminiferous tubules of the testes	stimulates spermatogenesis

Abnormal FSH levels with corresponding increased or decreased levels of LH, estrogens, progesterone, and testosterone are associated with a number of pathological conditions.[2] Increased FSH levels are associated with menopause and primary ovarian hypofunction in females and primary hypogonadism in males. Decreased FSH levels are associated with primary ovarian hyperfunction in females and primary hypergonadism in males. Normal or decreased FSH levels are associated with polycystic ovary disease in females.

Assay Principle

The ADVIA Centaur FSH assay is a two-site sandwich immunoassay using direct chemiluminometric technology, which uses constant amounts of two antibodies that have specificity for the intact FSH molecule. The first antibody, in the Lite Reagent, is a polyclonal sheep anti-FSH antibody labeled with acridinium ester. The second antibody, in the Solid Phase, is a monoclonal mouse anti-FSH antibody, which is covalently coupled to paramagnetic particles.

The system automatically performs the following steps:

- dispenses 100 µL of sample into a cuvette
- dispenses 50 µL Lite Reagent and incubates for 5.0 minutes at 37°C
- dispenses 225 µL of Solid Phase and incubates for 2.5 minutes at 37°C
- separates, aspirates, and washes the cuvettes with reagent water[5]
- dispenses 300 µL each of Acid Reagent and Base Reagent to initiate the chemiluminescent reaction
- reports results according to the selected option, as described in the system operating instructions or in the online help system

A direct relationship exists between the amount of FSH present in the patient sample and the amount of relative light units (RLUs) detected by the system.

Specimen Collection and Handling

Serum is the recommended sample type for this assay.

The following recommendations for handling and storing blood samples are furnished by the National Committee for Clinical Laboratory Standards (NCCLS):[6]

- Collect all blood samples observing universal precautions for venipuncture.
- Allow samples to clot adequately before centrifugation.
- Keep tubes stoppered and upright at all times.
- Do not use samples that have been stored at room temperature for longer than 8 hours.
- Tightly cap and refrigerate specimens at 2 to 8°C if the assay is not completed within 8 hours.
- Freeze samples at or below -20°C if the sample is not assayed within 48 hours.
- Freeze samples only once and mix thoroughly after thawing.

Before placing samples on the system ensure that:

- Samples are free of fibrin or other particulate matter.
- Samples are free of bubbles.

Reagents

Store the reagents upright at 2–8°C.
Mix all primary reagent packs by hand before loading them onto the system. Visually inspect the bottom of the reagent pack to ensure that all particles are dispersed and resuspended. For detailed information about preparing the reagents for use, refer to Appendix C, *Handling Reagents*.

Reagent Pack	Reagent	Volume	Ingredients	Storage	Stability
ADVIA Centaur FSH ReadyPack primary reagent pack	Lite Reagent	5.0 mL/ reagent pack	polyclonal sheep anti-FSH antibody (~327.2 ng/mL) labeled with acridinium ester in buffer with sodium azide (0.1%) and preservatives	2–8°C	until the expiration date on the pack label. For onboard stability, refer to *Onboard Stability and Calibration Interval.*
	Solid Phase	22.5 mL/ reagent pack	monoclonal mouse anti-FSH antibody (~0.01 mg/mL) covalently coupled to paramagnetic particles in buffer with protein stabilizers, sodium azide (0.1%), and preservatives	2–8°C	until the expiration date on the pack label. For onboard stability, refer to *Onboard Stability and Calibration Interval.*
ADVIA Centaur M-DIL 1 ReadyPack ancillary reagent pack	Multi-Diluent 1	25.0 mL/ reagent pack	equine serum with sodium azide (0.1%) and preservatives	2–8°C	until the expiration date on the pack label or 28 consecutive days after accessing the ancillary reagent pack

CAUTION: Sodium azide can react with copper and lead plumbing to form explosive metal azides. On disposal, flush reagents with a large volume of water to prevent the buildup of azides, if disposal into a drain is in compliance with federal, state, and local requirements.

R22
S28

Harmful! Harmful if swallowed. After contact with skin, wash immediately with plenty of soap and water. **Contains:** sodium azide; Lite Reagent, Solid Phase

CAUTION: This device contains material of animal origin and should be handled as a potential carrier and transmitter of disease.

For *In Vitro* Diagnostic Use.

Loading Reagents

Ensure that the system has sufficient primary and ancillary reagent packs. For detailed information about preparing the system, refer to the system operating instructions or to the online help system.

CAUTION: Mix all primary reagent packs by hand before loading them onto the system. Visually inspect the bottom of the reagent pack to ensure that all particles are dispersed and resuspended. For detailed information about preparing the reagents for use, refer to Appendix C, *Handling Reagents*.

Load the ReadyPack reagent packs in the primary reagent area using the arrows as a placement guide. The system automatically mixes the primary reagent packs to maintain homogeneous suspension of the reagents. For detailed information about loading reagents, refer to the system operating instructions or to the online help system.

If automatic dilution of a sample is required, load ADVIA Centaur Multi-Diluent 1 in the ancillary reagent entry.

Onboard Stability and Calibration Interval

The ADVIA Centaur FSH assay can be run using either the high or low volume usage option. If you use the low volume usage option, you will need to modify the test definition parameters for the assay. For detailed information about modifying test definitions, refer to the system operating instructions or to the online help system.

- High volume usage = use of more than one primary reagent pack within the Onboard Stability period indicated in the table for *High Volume Usage*.
- Low volume usage = use of less than one primary reagent pack within the Onboard Stability period indicated in the table for *High Volume Usage*.

High Volume Usage

Onboard Stability	Calibration Interval
14 days	28 days

Additionally, the ADVIA Centaur FSH assay requires a two-point calibration:

- when changing lot numbers of primary reagent packs
- when replacing system components
- when quality control results are repeatedly out of range

CAUTION:

- Discard the primary reagent packs at the end of the *High Volume Usage* onboard stability interval.
- Do not use reagents beyond the expiration date.

Low Volume Usage

NOTE: For low volume usage, load only one primary reagent pack on the system at a time. Perform a calibration every time you load a fresh primary reagent pack.

Onboard Stability	Calibration Interval
28 days	14 days

241

Additionally, the ADVIA Centaur FSH assay requires a two-point calibration:

- when changing lot numbers of primary reagent packs
- when replacing system components
- when quality control results are repeatedly out of range

CAUTION:

- Discard the primary reagent pack at the end of the *Low Volume Usage* onboard stability interval. When the Primary Reagent Stability option is set to **USE BEYOND**, the system does not display a flag when the reagent exceeds the onboard stability.
- Do not use reagents beyond the expiration date.

Master Curve Calibration

The ADVIA Centaur FSH assay requires a Master Curve calibration when using a new lot number of Lite Reagent and Solid Phase. For each new lot number of Lite Reagent and Solid Phase, use the barcode reader or keyboard to enter the Master Curve values on the system. The Master Curve card contains the Master Curve values. For detailed information about entering Master Curve values, refer to the system operating instructions or to the online help system.

Quality Control

For detailed information about entering quality control values, refer to the system operating instructions or to the online help system.

To monitor system performance and chart trends, as a minimum requirement, two levels of quality control material should be assayed on each day that samples are analyzed. Quality control samples should also be assayed when performing a two-point calibration. Treat all quality control samples the same as patient samples.

Siemens Healthcare Diagnostics recommends the use of commercially available quality control materials with at least 2 levels (low and high). A satisfactory level of performance is achieved when the analyte values obtained are within the Acceptable Control Range for the system or within your range, as determined by an appropriate internal laboratory quality control scheme.

If the quality control results do not fall within the Expected Values or within the laboratory's established values, do not report results. Take the following actions:

- Verify that the materials are not expired.
- Verify that required maintenance was performed.
- Verify that the assay was performed according to the instructions for use.
- Rerun the assay with fresh quality control samples.
- If necessary, contact your local technical support provider or distributor for assistance.

Sample Volume

This assay requires 100 µL of sample for a single determination. This volume does not include the unusable volume in the sample container or the additional volume required when performing duplicates or other tests on the same sample. For detailed information about determining the minimum required volume, refer to *Sample Volume Requirements* in the *ADVIA Centaur Reference Manual.*

Assay Procedure

For detailed procedural information, refer to the system operating instructions or to the online help system.

Procedural Notes

Calculations

For detailed information about how the system calculates results, refer to the system operating instructions or to the online help system.

The system reports serum FSH results in mIU/mL (mass units) or IU/L (SI units), depending on the units defined when setting up the assay. The conversion formula is 1 mIU/mL = 1 IU/L.

Dilutions

- Serum samples with FSH levels greater than 200 mIU/mL (IU/L) must be diluted and retested to obtain accurate results.
- Patient samples can be automatically diluted by the system or prepared manually.
- For automatic dilutions, ensure that ADVIA Centaur Multi-Diluent 1 is loaded and set the system parameters as follows:

  Dilution point: ≤ 200 mIU/mL (IU/L)

  Dilution factor: 2

  For detailed information about automatic dilutions, refer to the system operating instructions or to the online help system.
- Manually dilute the patient samples when patient results exceed the linearity of the assay using automatic dilution, or when laboratory protocol requires manual dilution.
- Use Multi-Diluent 1 to manually dilute patient samples, and then load the diluted sample in the sample rack, replacing the undiluted sample.
- Ensure that results are mathematically corrected for dilution. If a dilution factor is entered when scheduling the test, the system automatically calculates the result.

High Dose Hook Effect

Patient samples with high FSH levels can cause a paradoxical decrease in the RLUs (high dose hook effect). In this assay, patient samples with FSH levels as high as 1000 mIU/mL (IU/L) will assay greater than 200 mIU/mL (IU/L).

Disposal

Dispose of hazardous or biologically contaminated materials according to the practices of your institution. Discard all materials in a safe and acceptable manner, and in compliance with all federal, state, and local requirements.

Limitations

Heterophilic antibodies in human serum can react with reagent immunoglobulins, interfering with in vitro immunoassays.[7] Patients routinely exposed to animals or to animal serum products can be prone to this interference and anomalous values may be observed. Additional information may be required for diagnosis.

Serum specimens that are . . .	Have an insignificant effect on the assay up to . . .
hemolyzed	150 mg/dL of hemoglobin
lipemic	1000 mg/dL of triglycerides
icteric	20 mg/dL of bilirubin

Expected Results

The expected results for the ACS:180® FSH assay were previously established. Data was obtained on serum samples from 524 apparently healthy individuals. Based on a central 95% interval, the following reference ranges were established:

Sample Category	N	Median (mIU/mL) (IU/L)	Range (mIU/mL) (IU/L)
Females			
Normally menstruating			
Follicular Phase	95	5.6	2.5–10.2
Midcycle Peak	49	9.0	3.4–33.4
Luteal Phase	99	2.9	1.5–9.1
Pregnant	92	0.0	< 0.3
Postmenopausal	72	64.3	23.0–116.3
Males			
13–70 years	117	4.5	1.4–18.1

These results were confirmed for the ADVIA Centaur FSH assay by analyzing 288 samples in the range of 0.4 to 175.1 mIU/mL (IU/L). Refer to *Method Comparison.*

As with all diagnostic assays, each laboratory should determine its own reference range(s) for the diagnostic evaluation of patient results.[8]

Performance Characteristics

Specificity

The cross-reactivity of the ADVIA Centaur FSH assay with TSH, LH, hCG, prolactin, and hGH was determined by adding these hormones to serum samples containing FSH. The level of FSH in the samples was then determined.

Cross-reactant	FSH value without cross-reactant (mIU/mL) (IU/L)	FSH value with cross-reactant (mIU/mL) (IU/L)
TSH; 1000 µIU/mL	2.7	3.4
	29.7	30.3
	62.0	63.0
LH; 300 mIU/mL	2.7	2.8
	30.3	29.9
	62.5	64.3
hCG; 200,000 mIU/mL	2.7	4.9
	29.5	31.7
	62.2	65.5
Prolactin; 400 ng/mL	2.8	2.7
	30.2	30.0
	61.9	62.3

Cross-reactant	FSH value without cross-reactant (mIU/mL) (IU/L)	FSH value with cross-reactant (mIU/mL) (IU/L)
hGH; 100 ng/mL	2.7	2.7
	30.5	30.3
	64.5	63.1

Interference testing was determined according to NCCLS Document EP7-P.[9]

Sensitivity and Assay Range

The ADVIA Centaur FSH assay measures FSH concentrations up to 200 mIU/mL (IU/L) with a minimum detectable concentration (analytical sensitivity) of 0.3 mIU/mL (IU/L). Analytical sensitivity is defined as the concentration of FSH that corresponds to the RLUs that are two standard deviations greater than the mean RLUs of 9 replicate determinations of the FSH zero standard.

Method Comparison

For 288 samples in the range of 0.4 to 175.1 mIU/mL (IU/L), the relationship between the ADVIA Centaur FSH assay and the ACS:180 FSH assay is described by the equation:

ADVIA Centaur FSH = 1.02 (ACS:180 FSH) + 0.48 mIU/mL

Correlation coefficient (r) = 0.99

Dilution Recovery

Seven human serum samples in the range of 92.6 to 179.0 mIU/mL (IU/L) of FSH were diluted 1:2, 1:4, 1:8, and 1:16 with Multi-Diluent 1 and assayed for recovery and parallelism. The recoveries ranged from 85.0% to 102.6% with a mean of 91.2%.

Sample	Dilution	Observed (mIU/mL) (IU/L)	Expected (mIU/mL) (IU/L)	Recovery %
1	—	138.0		
	1:2	67.9	69.0	98.4
	1:4	33.4	34.5	96.8
	1:8	15.8	17.2	91.9
	1:16	8.1	8.6	94.2
	Mean			95.3
2	—	172.8		
	1:2	86.4	86.4	100.0
	1:4	41.0	43.2	94.9
	1:8	19.3	21.6	89.4
	1:16	9.5	10.8	88.0
	Mean			93.1
3	—	92.6		
	1:2	43.6	46.3	94.2
	1:4	20.2	23.2	87.1
	1:8	10.4	11.6	89.7
	1:16	4.9	5.8	84.5
	Mean			88.9
4	—	139.6		
	1:2	67.4	69.8	96.6
	1:4	31.5	34.9	90.3
	1:8	15.0	17.5	85.7
	1:16	7.5	8.7	86.2
	Mean			89.7
5	—	179.0		
	1:2	91.8	89.5	102.6
	1:4	41.6	44.8	92.9
	1:8	20.4	22.4	91.1
	1:16	9.7	11.2	86.6
	Mean			93.3

245

Sample	Dilution	Observed (mIU/mL) (IU/L)	Expected (mIU/mL) (IU/L)	Recovery %
6	—	116.4		
	1:2	56.8	58.2	97.6
	1:4	25.0	29.1	85.9
	1:8	12.7	14.6	87.0
	1:16	6.2	7.3	84.9
	Mean			88.9
7	—	134.1		
	1:2	61.1	67.1	91.1
	1:4	30.8	33.5	91.9
	1:8	14.8	16.8	88.1
	1:16	7.2	8.4	85.7
	Mean			89.2
Mean				**91.2**

Spiking Recovery

Varying amounts of FSH were added to five samples with endogenous FSH levels of 1.1 to 7.5 mIU/mL (IU/L). The recoveries ranged from 90.5% to 116.9% with a mean of 103.7%.

Sample	Amount Added (mIU/mL) (IU/L)	Observed (mIU/mL) (IU/L)	Recovery %
1	—	3.1	
	15	18.5	102.7
	39	38.4	90.5
	63	70.4	106.8
	77	83.5	104.4
	116	126.8	106.6
	Mean		102.2
2	—	1.1	
	15	17.1	106.7
	39	37.1	92.3
	63	70.6	110.3
	77	91.1	116.9
	116	126.1	107.8
	Mean		106.8
3	—	7.5	
	15	24.3	112.0
	39	45.4	97.2
	63	78.5	112.7
	77	95.1	113.8
	116	134.7	109.7
	Mean		109.1
4	—	5.1	
	15	20.5	102.7
	39	42.8	96.7
	63	73.8	109.1
	77	83.6	102.0
	116	111.7	91.9
	Mean		100.5
5	—	2.2	
	15	16.8	97.3
	39	39.9	96.7
	63	64.8	99.4
	77	83.9	106.1
	116	117.9	99.7
	Mean		99.8
Mean			**103.7**

Precision

Five samples were assayed 6 times, in each of 12 runs, on 3 systems, (n = 72 for each sample), over a period of 2 days. The following results were obtained:

Mean (mIU/mL) (IU/L)	Within-run % CV	Run-to-run % CV	Total % CV
6.9	2.9	2.7	3.9
12.0	2.1	1.8	2.8
23.4	2.0	1.2	2.4
53.1	2.2	0.3	2.2
144.3	2.7	1.2	2.9

Standardization

The ADVIA Centaur FSH assay standardization is traceable to World Health Organization (WHO) 2nd International Standard for human FSH (IS 94/632). A comparison over the full assay range gave the following correlation:

$$\text{ADVIA Centaur FSH} = 0.91\ (\text{WHO}) - 0.18\ \text{IU/mL}$$

$$r = 0.999$$

Assigned values for calibrators are traceable to this standardization.

Technical Assistance

For customer support, please contact your local technical support provider or distributor.

www.siemens.com/diagnostics

References

1. Kicklighter EJ, Norman RJ. The gonads. In: Kaplan LA, Pesce AJ, editors. Clinical chemistry: theory, analysis, and correlation, 2nd ed. St. Louis: CV Mosby, 1989. p.650–63.
2. Liwnicz BH, Liwnicz RG. The hypothalamopituitary system. In: Kaplan LA, Pesce AJ, editors. Clinical chemistry: theory, analysis, and correlation, 2nd ed. St. Louis: CV Mosby, 1989. p.613–9.
3. Scott MG, Ladenson JH, Green ED, et al. Hormonal evaluation of female infertility and reproductive disorders. Clin Chem 1989;35:620–29.
4. Butt WR, Blunt SM. The role of the laboratory in the investigation of infertility. Ann Clin Biochem 1988;25:601–9.
5. Reagent Water Technical Bulletin. Siemens Healthcare Diagnostics, 107060.
6. National Committee for Clinical Laboratory Standards. Procedures for the handling and processing of blood specimens; second edition; approved guideline. NCCLS Document H18-A2; Wayne (PA): NCCLS; 1999 Oct. 40p.
7. Boscato LM, Stuart MC. Heterophilic antibodies: a problem for all immunoassays. Clin Chem 1988;34:27–33.
8. National Committee for Clinical Laboratory Standards. How to define, determine, and utilize reference intervals in the clinical laboratory; approved guideline. NCCLS Document C28-A. Wayne (PA): NCCLS; 1995 June 59p.
9. National Committee for Clinical Laboratory Standards. Interference testing in clinical chemistry. Proposed Guideline. NCCLS document EP7-P. Wayne (PA):NCCLS;1986.

ADVIA Centaur, ReadyPack, and ACS:180 are trademarks of Siemens Healthcare Diagnostics.

© 2008 Siemens Healthcare Diagnostics Inc. All rights reserved.

US Pats 4,745,181; 4,918,192; 5,110,932; 5,609,822; 5,788,928

Origin: US

Siemens Healthcare Diagnostics Inc.
Tarrytown, NY 10591-5097 USA

EC REP Siemens Healthcare Diagnostics Ltd.
Sir William Siemens Sq.
Frimley, Camberley, UK GU16 8QD

Siemens Healthcare
Diagnostics Pty Ltd
885 Mountain Highway
Bayswater Victoria 3153
Australia

シーメンスヘルスケア・
ダイアグノスティクス株式会社
東京都品川区東五反田 3−20−14
Siemens Healthcare Diagnostics
輸入

SIEMENS

CE

ADVIA Centaur®
ADVIA Centaur® XP
Immunoassay Systems

FT3

Assay Summary

Sample Type	*Serum*
Sample Volume	*50 µL*
Calibrator	*A*
Sensitivity and Assay Range	*0.2 – 20 pg/mL (0.3 – 30.8 pmol/L)*

Contents

REF	Contents	Number of Tests
03154228 (119781)	5 ReadyPack® primary reagent packs containing ADVIA Centaur® FT3 Lite Reagent and Solid Phase ADVIA Centaur and ADVIA Centaur CP FT3 Master Curve Card	250
or		
01131417 (119780)	1 ReadyPack primary reagent pack containing ADVIA Centaur FT3 Lite Reagent and Solid Phase ADVIA Centaur and ADVIA Centaur CP FT3 Master Curve Card	50

Intended Use

For *in vitro* diagnostic use in the quantitative determination of free triiodothyronine (FT_3) in serum using the ADVIA Centaur and ADVIA Centaur XP systems.

Materials Required But Not Provided

REF	Description	Contents
04800735	Calibrator A	6 vials of low calibrator CAL L 6 vials of high calibrator CAL H
or		
04800646	Calibrator A	2 vials of low calibrator CAL L 2 vials of high calibrator CAL H

Optional Reagents

REF	Description	Contents
672425	FT3 Master Curve Material	7 x 1 mL

Summary and Explanation of the Test

Triiodothyronine (3,5,3'-L-triiodothyronine, T_3) is a hormone synthesized and secreted from the thyroid gland, and formed by peripheral deiodination of thyroxine (T_4). T_3 and T_4 are secreted into the circulation in response to thyroid stimulating hormone (TSH) and play an important role in regulating metabolism. The T_3 and T_4 secretion are regulated by a negative feedback mechanism involving the thyroid gland, pituitary gland, and hypothalamus.

In the circulation, 99.7% of T_3 is reversibly bound to transport proteins, primarily thyroxine-binding globulin (TBG) and to a lesser extent albumin and prealbumin.[1] The remaining T_3 does not bind to transport proteins, but is free in the circulation. This unbound fraction of the total T_3 concentration is free triiodothyronine (free T_3, FT_3). Unbound T_3 is metabolically active.[1-3]

Free T_3 levels correlate with T_3 secretion and metabolism. In hypothyroidism and hyperthyroidism, free T_3 levels parallel changes in total T_3 levels.[2] However, measuring free T_3 is useful when altered levels of total T_3 occur due to changes in T_3 binding proteins, especially TBG. TBG levels remain relatively constant in healthy individuals, but certain conditions such as normal pregnancy and steroid therapy can alter these levels. In these conditions, free T_3 levels are unchanged, while total T_3 levels parallel the changes in TBG.

Assay Principle

The ADVIA Centaur FT3 assay is a competitive immunoassay using direct chemiluminescent technology. FT_3 in the sample competes with a T_3 analog, which is covalently coupled to paramagnetic particles in the Solid Phase for a limited amount of a combination of acridinium ester-labeled monoclonal mouse anti-T_3 antibodies in the Lite Reagent.

The system automatically performs the following actions:

- dispenses 50 µL of sample into a cuvette
- dispenses 100 µL of Lite Reagent and incubates for 5.0 minutes at 37°C
- dispenses 450 µL of Solid Phase and incubates for 2.5 minutes at 37°C
- separates, aspirates, and washes the cuvettes with reagent water[4]
- dispenses 300 µL each of Acid Reagent and Base Reagent to initiate the chemiluminescent reaction
- reports results according to the selected option, as described in the system operating instructions or in the online help system

An inverse relationship exists between the amount of FT_3 present in the patient sample and the amount of relative light units (RLUs) detected by the system.

Specimen Collection and Handling

Serum is the recommended sample type for this assay.

The following recommendations for handling and storing blood samples are furnished by the Clinical and Laboratory Standards Institute (CLSI, formerly NCCLS):

- Collect all blood samples observing universal precautions for venipuncture.
- Allow samples to clot adequately before centrifugation.
- Keep tubes stoppered and upright at all times.
- Do not use samples that have been stored at room temperature for longer than 8 hours.
- Tightly cap and refrigerate specimens at 2 to 8°C if the assay is not completed within 8 hours.

251

- Freeze samples at or below -20°C if the sample is not assayed within 48 hours.
- Freeze samples only once and mix thoroughly after thawing.

Before placing samples on the system, ensure that samples have the following characteristics:

- Samples are free of fibrin or other particulate matter.
- Samples are free of bubbles.

Reagents

Store the reagents upright at 2–8°C.
Mix all primary reagent packs by hand before loading them onto the system. Visually inspect the bottom of the reagent pack to ensure that all particles are dispersed and resuspended. For detailed information about preparing the reagents for use, see the system operator's guide.

Reagent Pack	Reagent	Volume	Ingredients	Storage	Stability
ADVIA Centaur FT3 ReadyPack primary reagent pack	Lite Reagent	5.0 mL/ reagent pack	monoclonal mouse anti-T_3 antibodies (~8 ng/mL) labeled with acridinium ester in HEPES buffer with protein stabilizers and sodium azide (0.1%)	2–8°C	until the expiration date on the pack label. For onboard stability, refer to *Onboard Stability and Calibration Interval.*
	Solid Phase	22.5 mL/ reagent pack	T_3 analog (~1.6 µg/mL) covalently coupled to paramagnetic particles in HEPES buffer with sodium azide (0.1%)	2–8°C	until the expiration date on the pack label. For onboard stability, refer to *Onboard Stability and Calibration Interval.*

CAUTION: Sodium azide can react with copper and lead plumbing to form explosive metal azides. On disposal, flush reagents with a large volume of water to prevent the buildup of azides, if disposal into a drain is in compliance with federal, state, and local requirements.

R22
S28

Harmful! Harmful if swallowed. After contact with skin, wash immediately with plenty of soap and water. **Contains:** sodium azide; Lite Reagent, Solid Phase

CAUTION: This device contains material of animal origin and should be handled as a potential carrier and transmitter of disease.

Safety data sheets (MSDS/SDS) available on www.siemens.com/diagnostics.

For *in vitro* diagnostic use.

Loading Reagents

Ensure that the system has sufficient primary and ancillary reagent packs. For detailed information about preparing the system, refer to the system operating instructions or to the online help system.

CAUTION: Mix all primary reagent packs by hand before loading them onto the system. Visually inspect the bottom of the reagent pack to ensure that all particles are dispersed and resuspended. For detailed information about preparing the reagents for use, see the system operator's guide.

Load the ReadyPack reagent packs in the primary reagent area using the arrows as a placement guide. The system automatically mixes the primary reagent packs to maintain homogeneous suspension of the reagents. For detailed information about loading reagents, refer to the system operating instructions or to the online help system.

Onboard Stability and Calibration Interval

Onboard Stability	Calibration Interval
28 days	28 days

Additionally, the ADVIA Centaur FT3 assay requires a two-point calibration:

- when changing lot numbers of primary reagent packs
- when replacing system components
- when quality control results are repeatedly out of range

CAUTION:

- Discard the primary reagent packs at the end of the onboard stability interval.
- Do not use reagents beyond the expiration date.

Master Curve Calibration

The ADVIA Centaur FT3 assay requires a Master Curve calibration when using a new lot number of Lite Reagent and Solid Phase. For each new lot number of Lite Reagent and Solid Phase, use the barcode reader or keyboard to enter the Master Curve values on the system. The Master Curve card contains the Master Curve values. For detailed information about entering calibration values, refer to the system operating instructions or to the online help system.

Quality Control

Follow government regulations or accreditation requirements for quality control frequency.

For detailed information about entering quality control values, refer to the system operating instructions or to the online help system.

To monitor system performance and chart trends, as a minimum requirement, two levels of quality control material should be assayed on each day that samples are analyzed. Quality control samples should also be assayed when performing a two-point calibration. Treat all quality control samples the same as patient samples.

Siemens Healthcare Diagnostics recommends the use of commercially available quality control materials with at least 2 levels (low and high). A satisfactory level of performance is achieved when the analyte values obtained are within the Acceptable Control Range for the system or within your range, as determined by an appropriate internal laboratory quality control scheme.

If the quality control results do not fall within the Expected Values or within the laboratory's established values, do not report results. Take the following actions:

- Verify that the materials are not expired.
- Verify that required maintenance was performed.
- Verify that the assay was performed according to the instructions for use.
- Rerun the assay with fresh quality control samples.
- If necessary, contact your local technical support provider or distributor for assistance.

253

Sample Volume

This assay requires 50 µL of sample for a single determination. This volume does not include the unusable volume in the sample container or the additional volume required when performing duplicates or other tests on the same sample. For detailed information about determining the minimum required volume, refer to *Sample Volume Requirements* in the *ADVIA Centaur Reference Manual.*

Assay Procedure

For detailed procedural information, refer to the system operating instructions or to the online help system.

Procedural Notes

Calculations

For detailed information about how the system calculates results, refer to the system operating instructions or to the online help system.

The system reports FT_3 results in pg/mL (mass units) or pmol/L (SI units) depending on the units defined when setting up the assay. The conversion formula is 1 pg/mL = 1.54 pmol/L.

Disposal

Dispose of hazardous or biologically contaminated materials according to the practices of your institution. Discard all materials in a safe and acceptable manner, and in compliance with all federal, state, and local requirements.

Limitations

Performance of this assay has not been established with neonatal specimens.

Heterophilic antibodies in human serum can react with reagent immunoglobulins, interfering with *in vitro* immunoassays.[6] Patients routinely exposed to animals or to animal serum products can be prone to this interference and anomalous values may be observed. Additional information may be required for diagnosis.

Serum specimens that are . . .	Have an insignificant effect on the assay up to . . .
hemolyzed	500 mg/dL of hemoglobin
lipemic	1000 mg/dL of triglycerides
icteric	20 mg/dL of bilirubin

Expected Results

The reference range for the ACS:180® FT3 assay was previously established. Data was obtained on samples from 594 apparently healthy adult individuals. Ninety-five percent of the FT_3 values for these individuals fell in the range of 2.3 to 4.2 pg/mL (3.5 to 6.5 pmol/L). These results were confirmed for the ADVIA Centaur FT3 assay by analyzing 239 samples in the range of 1.76 to 17.57 pg/mL (2.7 to 27.1 pmol/L). Refer to *Method Comparison.*

As with all *in vitro* diagnostic assays, each laboratory should determine its own reference range(s) for the diagnostic evaluation of patient results.[7]

254

Performance Characteristics

Specificity

The specificity of the ADVIA Centaur FT3 assay was examined in two different ways. The cross-reactivity of the antibody was measured in the absence of serum proteins. This cross-reactivity can be expressed as a ratio of

- the amount of T_3 required to displace 50% of the labeled T_3 analog from anti-T_3, and
- the amount of cross-reacting substance to give the same 50% displacement.

Cross-reactant	% Cross-reactivity
Thyroxine	0.23
Diiodothyronine	1.47
Diiodotyrosine	< 1.0
Monoiodotyrosine	< 1.0
Reverse T3	< 0.8

The following substances were added to T_3 free serum samples, tested against an appropriate control, and the observed change was noted. The observed change is presented in the following table:

Compound	Amount Added	Observed Change (pg/mL)
Phenylbutazone	300 µg/mL	0.040
Propylthiouracil	40 µg/mL	0.043
Methimazole	4 µg/mL	0.029
Sodium salicylate	500 µg/mL	0.069
Diphenylhydantoin	40 µg/mL	0.067
L-3,5-diiodothyronine	50 pg/mL	0.045
Diiodotyrosine	0.8 pg/mL	0.020
Monoiodotyrosine	0.8 pg/mL	0.038
Reverse T3	2000 pg/mL	0.048

Interference testing was determined according to NCCLS Document EP7-P.[8]

Sensitivity and Assay Range

The ADVIA Centaur FT3 assay measures FT_3 concentrations up to 20 pg/mL (30.8 pmol/L) with a minimum detectable concentration (analytical sensitivity) of 0.2 pg/mL (0.3 pmol/L). Analytical sensitivity is defined as the concentration of FT_3 that corresponds to the RLUs that are two standard deviations less than the mean RLUs of 20 replicate determinations of the FT3 zero standard.

Method Comparison

For 239 samples in the range of 1.76 to 17.57 pg/mL (2.7 to 27.1 pmol/L), the relationship between the ADVIA Centaur FT3 assay and the ACS:180 FT3 assay is described by the equation:

ADVIA Centaur FT3 = 0.99 (ACS:180 FT3) + 0.014 pg/mL

Correlation coefficient (r) = 0.99

255

Precision

Three samples were assayed 6 times, in each of 24 runs, on 4 systems. The following results were obtained:

Mean (pg/mL)	Mean (pmol/L)	Within-run % CV	Total % CV
1.9	2.9	3.08	4.05
4.3	6.6	2.35	2.87
9.2	14.2	2.47	2.76

Traceability of Standardization

The ADVIA Centaur FT3 assay is traceable to an internal standard manufactured using U.S.P. (United States Pharmacopeia) material. Assigned values for calibrators are traceable to this standardization.

Technical Assistance

For customer support, contact your local technical support provider or distributor.

www.siemens.com/diagnostics

References

1. Fernandez-Ulloa M, Maxon HR. Thyroid. In: Kaplan LA, Pesce AJ, editors. Clinical chemistry: theory, analysis, and correlation. 2nd ed. St. Louis: CV Mosby, 1989. p.620–38.
2. Watts NB, Keffer JH. Practical endocrine diagnosis. 3rd ed. Philadelphia: Lea and Febiger, 1982. p.1–27, 77–96.
3. Chattoraj SC, Watts NB. Endocrinology. In: Tietz NW, editor. Fundamentals of clinical chemistry. 3rd ed. Philadelphia: WB Saunders, 1987. p.584–92.
4. Reagent Water Technical Bulletin. Siemens Healthcare Diagnostics, 107060.
5. Clinical and Laboratory Standards Institute (formerly NCCLS). *Procedures for the Handling and Processing of Blood Specimens; Approved Guideline - Third Edition.* Wayne, PA: Clinical and Laboratory Standards Institute; 2004. NCCLS Document H18-A3.
6. Boscato LM, Stuart MC. Heterophilic antibodies: a problem for all immunoassays. *Clin Chem.* 1988;34:27–33.
7. Clinical and Laboratory Standards Institute (formerly NCCLS). *How to Define and Determine Reference Intervals in the Clinical Laboratory; Approved Guideline - Second Edition.* Wayne, PA: Clinical and Laboratory Standards Institute; 2000. NCCLS Document C28-A2.
8. Clinical and Laboratory Standards Institute (formerly NCCLS). *Interference Testing in Clinical Chemistry; Approved Guideline - Second Edition.* Wayne, PA: Clinical and Laboratory Standards Institute; 2005. CLSI document EP7-A2.

ADVIA Centaur, ReadyPack, and ACS:180 are trademarks of Siemens Healthcare Diagnostics.

© 2011 Siemens Healthcare Diagnostics. All rights reserved.

US Pats 5,110,932; 5,609,822; 5,788,928

Origin: US

Siemens Healthcare Diagnostics Inc.
Tarrytown, NY 10591-5097 USA

EC REP Siemens Healthcare Diagnostics Ltd.
Sir William Siemens Sq.
Frimley, Camberley, UK GU16 8QD

Siemens Healthcare
Diagnostics Pty Ltd
885 Mountain Highway
Bayswater Victoria 3153
Australia

256

Understanding the Symbols

The following symbols may appear on the product labeling:

Symbol	Definition	Symbol	Definition
IVD	*In vitro* diagnostic medical device	REF	Catalog number
	Manufacturer	EC REP	Authorized Representative in the European Community
CE	CE Mark	CE 0088	CE Mark with identification number of notified body
	Consult instructions for use		Caution! Potential Biohazard
0°C	Do not freeze (> 0°C)	2°C 8°C	Temperature limitation (2–8°C)
2°C	Lower limit of temperature (≥ 2°C)	-10°C	Upper limit of temperature (≤ -10°C)
	Keep away from sunlight		Use by
UP	Store upright		Shake the reagent pack vigorously. Refer to *Loading Reagents* in the assay-specific ADVIA Centaur product instructions for detailed information.
LOT	Batch code	Σ XX	Contains sufficient for (n) tests
2010-01	Date format (year-month)	PRINTED WITH SOY INK	Printed with soy ink
DER GRÜNE PUNKT	Green dot		Recycle

257

Gentamicin (GENT)

CE

Assay Summary

Sample Type	***Serum, Heparinized Plasma, EDTA Plasma***
Sample Volume	***15 µL***
Calibrator	***GENT***
Sensitivity and Assay Range	***0.17–12 µg/mL (0.36–25.1 µmol/L)***

Contents

REF	Contents	Number of Tests
05223979	1 ReadyPack® primary reagent pack containing ADVIA Centaur® GENT Lite Reagent and Solid Phase 2 ReadyPack primary reagent packs containing ADVIA Centaur Probe Wash 2 [PW 2] ADVIA Centaur GENT Master Curve card	50

For a definition of symbols used in product labeling, refer to *Understanding the Symbols* in Appendix D.

Intended Use

For *in vitro* diagnostic use in the quantitative determination of gentamicin in serum or plasma using the ADVIA Centaur and ADVIA Centaur XP systems.

Materials Required but Not Provided

REF	Description	Contents
05226870	GENT Calibrator	6 vials of low calibrator [CAL L] 6 vials of high calibrator [CAL H]
or		
05226110	GENT Calibrator	2 vials of low calibrator [CAL L] 2 vials of high calibrator [CAL H]

Optional Reagents

REF	Description	Contents
08805642 (110318)	ADVIA Centaur Multi-Diluent 7 [M-DIL 7]	2 ReadyPack ancillary reagent packs containing 5 mL/pack
or		
05631465 (570099)	Multi-Diluent 7 [M-DIL 7]	20 mL/vial
05227559	GENT Master Curve Material	6 x 1 mL

258

Summary and Explanation of the Test

Gentamicin is an aminoglycoside antibiotic that is used primarily to treat serious infectious diseases caused by gram-negative bacilli. Gentamicin inhibits the normal process of protein synthesis in certain organisms.[1-5] Gentamicin may be used in combination with other antibiotics to treat serious infections such as central nervous system infections (meningitis), urinary tract, respiratory tract, or gastrointestinal tract infections, and neonatal sepsis.[5] Most Streptococcus and some anaerobic organisms are resistant to gentamicin.[1]

Gentamicin has a narrow therapeutic range in serum of 5 to 10 µg/mL (10.5 to 20.9 µmol/L) for peak levels and 1 to 2 µg/mL (2.1 to 4.2 µmol/L) for trough levels.[2,4] Monitoring a patient's serum gentamicin level is important in preventing drug-related side effects, which may occur when peak serum gentamicin levels exceed 10 to 12 µg/mL (20.9 to 25.1 µmol/L) or when trough gentamicin levels exceed 2 µg/mL (4.2 µmol/L).[1,2,4,6] Because gentamicin shows an affinity for renal tissue and penetrates otoperilymph, excess gentamicin levels can cause renal toxicity and ototoxicity.[1-3,6]

The elimination half-life of gentamicin is relatively short, approximately 2 to 3 hours.[4] Therapeutic drug monitoring helps to ensure therapeutic levels and to minimize toxic accumulation of gentamicin.[4,6] Patients who are most susceptible to the toxic effects of gentamicin usually have impaired renal function, receive high doses, are critically ill neonates[5,7] or undergo prolonged gentamicin therapy.

Assay Principle

The ADVIA Centaur Gentamicin assay is a competitive immunoassay using direct, chemiluminescent technology. Gentamicin in the patient sample competes with acridinium ester-labeled gentamicin derivative in the Lite Reagent for a limited amount of monoclonal mouse anti-gentamicin antibody, which is coupled to paramagnetic particles in the Solid Phase.

The system automatically performs the following actions:

- Dispenses 15 µL of the sample into a cuvette.
- Washes the reagent probe twice with 450 µL of Probe Wash 2, if necessary.
- Dispenses 100 µL of Lite Reagent and 400 µL of Solid Phase and incubates for 7.5 minutes at 37°C.
- Separates, aspirates, and washes the cuvettes with reagent water.[8]
- Dispenses 300 µL each of Acid Reagent and Base Reagent to initiate the chemiluminescent reaction.
- Reports results according to the selected option, as described in the system operating instructions or in the online help system.

An inverse relationship exists between the amount of gentamicin present in the patient sample and the amount of relative light units (RLUs) detected by the system.

Specimen Collection and Handling

NOTE: Available literature references present conflicting and complex recommendations on the use of gel barrier tubes for therapeutic drug monitoring samples. Each lab should contact their specific tube manufacturer for additional information and recommendations for therapeutic drug monitoring testing with the ADVIA Centaur systems.

Serum, heparinized plasma, or EDTA plasma are the recommended sample types for this assay.

Average measured gentamicin concentrations of 10 samples, collected in heparin collection tubes were within 100.8% of measured gentamicin concentrations in control red top serum collection tubes. Ten samples collected in EDTA collection tubes had measured gentamicin concentrations within 103.0% of control red top serum collection tubes.

The following recommendations for handling and storing blood samples are furnished by the Clinical and Laboratory Standards Institute (CLSI, formerly NCCLS):[9]

- Collect all blood samples observing universal precautions for venipuncture.
- Allow samples to clot adequately before centrifugation.
- Keep tubes stoppered and upright at all times.
- Do not use samples that have been stored at room temperature for longer than 8 hours.
- Tightly cap and refrigerate specimens at 2° to 8°C if the assay is not completed within 8 hours.
- Freeze samples at or below -20°C if the sample is not assayed within 48 hours. Frozen specimens can remain frozen for up to 1 month in non frost-free freezers.
- Freeze samples only once and mix thoroughly after thawing.

Before placing samples on the system, ensure that samples have the following characteristics:

- Samples are free of fibrin or other particulate matter.
- Samples are free of bubbles.

Reagents

Store the reagents upright at 2–8°C.
Mix all primary reagent packs by hand before loading them onto the system. Visually inspect the bottom of the reagent pack to ensure that all particles are dispersed and resuspended. For detailed information about preparing the reagents for use, refer to Appendix C, *Handling Reagents*.

Reagent Pack	Reagent	Volume	Ingredients	Storage	Stability
ADVIA Centaur GENT ReadyPack primary reagent pack	Lite Reagent	5.0 mL/ reagent pack	gentamicin derivative labeled with acridinium ester (~0.46 ng/mL) in phosphate buffer with BSA, sodium azide (< 0.1%), and preservatives	2–8°C	Until the expiration date on the pack label. For onboard stability, refer to *Onboard Stability and Calibration Interval.*
	Solid Phase	20.0 mL/ reagent pack	monoclonal mouse anti-gentamicin antibody (~20 µg/mL) covalently coupled to paramagnetic particles in phosphate buffered saline with BSA, sodium azide (< 0.1%), and preservatives	2–8°C	Until the expiration date on the pack label. For onboard stability, refer to *Onboard Stability and Calibration Interval.*
ADVIA Centaur M-DIL 7 ReadyPack ancillary reagent pack	Multi-Diluent 7	5.0 mL/ reagent pack	human serum with sodium azide (< 0.1%)	2–8°C	Until the expiration date on the pack label or 28 consecutive days after accessing the ancillary reagent pack.
ADVIA Centaur PW 2 ReadyPack primary reagent pack	Probe Wash 2	22.5 mL/ reagent pack	0.2N hydrochloric acid	2–8°C	Until the expiration date on the pack label or 28 days onboard.

260

NOTE: Sodium azide can react with copper and lead plumbing to form explosive metal azides. On disposal, flush reagents with a large volume of water to prevent the buildup of azides, if disposal into a drain is in compliance with federal, state, and local requirements.

CAUTION! POTENTIAL BIOHAZARD: Contains human source material. While each human serum or plasma donor unit used in the manufacture of this product was tested by FDA-approved methods and found nonreactive for hepatitis B surface antigen (HBsAg), antibody to hepatitis C (HCV), and antibody to HIV-1/2, all products manufactured using human source material should be handled as potentially infectious. Because no test method can offer complete assurance that hepatitis B or C viruses, HIV, or other infectious agents are absent, these products should be handled according to established good laboratory practices.[10-12]

CAUTION: This device contains material of animal origin and should be handled as a potential carrier and transmitter of disease.

For *in vitro* diagnostic use.

Loading Reagents

Ensure that the system has sufficient primary and ancillary reagent packs. For detailed information about preparing the system, refer to the system operating instructions or to the online help system.

Mix all primary reagent packs by hand before loading them onto the system. Visually inspect the bottom of the reagent pack to ensure that all particles are dispersed and resuspended. For detailed information about preparing the reagents for use, refer to Appendix C, *Handling Reagents*.

Load the ReadyPack reagent pack and one Probe Wash 2 reagent pack in the primary reagent area using the arrows as a placement guide. The system automatically mixes the primary reagent packs to maintain homogeneous suspension of the reagents. For detailed information about loading reagents, refer to the system operating instructions or to the online help system.

If automatic dilution of a sample is required, load ADVIA Centaur Multi-Diluent 7 in the ancillary reagent entry.

Onboard Stability and Calibration Interval

Onboard Stability	Calibration Interval
14 days	28 days

Additionally, the ADVIA Centaur Gentamicin assay requires a two-point calibration:

- when changing lot numbers of primary reagent packs
- when replacing system components
- when quality control results are repeatedly out of range

NOTE:

- Discard the primary reagent packs at the end of the onboard stability interval. Discard the Probe Wash 2 reagent pack after 28 days onboard.
- Do not use reagents beyond the expiration date.

Master Curve Calibration

The ADVIA Centaur Gentamicin assay requires a Master Curve calibration when using a new lot number of Lite Reagent and Solid Phase. For each new lot number of Lite Reagent and Solid Phase, use the barcode reader or keyboard to enter the Master Curve values on the system. The Master Curve card contains the Master Curve values. For detailed information about entering calibration values, refer to the system operating instructions or to the online help system.

Quality Control

For detailed information about entering quality control values, refer to the system operating instructions or to the online help system.

To monitor system performance and chart trends, as a minimum requirement, two levels of quality control material should be assayed on each day that samples are analyzed. Quality control samples should also be assayed when performing a two-point calibration. Treat all quality control samples the same as patient samples.

Siemens Healthcare Diagnostics recommends the use of commercially available quality control materials with at least 2 levels (low and high). A satisfactory level of performance is achieved when the analyte values obtained are within the Acceptable Control Range for the system or within your range, as determined by an appropriate internal laboratory quality control scheme.

If the quality control results do not fall within the Expected Values or within the laboratory's established values, do not report results. Take the following actions:

- Verify that the materials are not expired.
- Verify that required maintenance was performed.
- Verify that the assay was performed according to the instructions for use.
- Rerun the assay with fresh quality control samples.
- If necessary, contact your local technical support provider or distributor for assistance.

Sample Volume

This assay requires 15 µL of sample for a single determination. This volume does not include the unusable volume in the sample container or the additional volume required when performing duplicates or other tests on the same sample. For detailed information about determining the minimum required volume, refer to *Sample Volume Requirements* in the *ADVIA Centaur Reference Manual.*

NOTE: The sample volume required to perform onboard dilution differs from the sample volume required to perform a single determination. Refer to the following information for the sample volume required to perform onboard dilutions:

Dilution	Sample Volume (µL)
1:2	100

Assay Procedure

For detailed procedural information, refer to the system operating instructions or to the online help system.

Procedural Notes

Calculations

For detailed information about how the system calculates results, refer to the system operating instructions or to the online help system.

The system reports gentamicin results in µg/mL (common units) or µmol/L (SI units), depending on the units defined when setting up the assay. The conversion formula is 1 µg/mL = 2.09 µmol/L.

262

Dilutions

- Dilute and retest samples with gentamicin levels greater than 12 µg/mL (25.1 µmol/L) to obtain accurate results.
- Patient samples can be automatically diluted by the system or prepared manually.
- For automatic dilutions, ensure that ADVIA Centaur Multi-Diluent 7 is loaded and set the system parameters as follows:

  Dilution point: ≤ 12 µg/mL (25.1 µmol/L)

  Dilution factor: 2

  For detailed information about automatic dilutions, refer to the system operating instructions or to the online help system.
- Manually dilute the patient samples when patient results exceed the linearity of the assay using automatic dilution, or when laboratory protocol requires manual dilution.
- Use Multi-Diluent 7 to manually dilute patient samples, and then load the diluted sample in the sample rack, replacing the undiluted sample.
- Ensure that results are mathematically corrected for dilution. If a dilution factor is entered when scheduling the test, the system automatically calculates the result.

Disposal

Dispose of hazardous or biologically contaminated materials according to the practices of your institution. Discard all materials in a safe and acceptable manner, and in compliance with all federal, state, and local requirements.

Limitations

Heterophilic antibodies in human serum can react with reagent immunoglobulins, interfering with *in vitro* immunoassays.[13] Patients routinely exposed to animals or to animal serum products can be prone to this interference and anomalous values may be observed. Additional information may be required for diagnosis.

Serum specimens that are . . .	Demonstrate ≤ 5% change in results up to . . .
hemolyzed	250 mg/dL of hemoglobin
lipemic	1000 mg/dL of triglycerides
icteric	10 mg/dL of bilirubin

Expected Results

Therapeutic ranges of 5 to 10 µg/mL (10.5 to 20.9 µmol/L) (peak) and 1 to 2 µg/mL (2.1 to 4.2 µmol/L) (trough) have been previously reported for gentamicin.[2,4]

As with all therapeutic drug assays, each laboratory should determine the appropriateness of this range for the diagnostic evaluation of patient results.[14]

Performance Characteristics

Specificity

Pooled serum samples at therapeutic gentamicin levels were spiked with the compounds listed at the levels indicated. ADVIA Centaur Gentamicin assay results from the spiked samples were compared with those of unspiked control samples. These compounds did not have a significant effect on the ADVIA Centaur Gentamicin measurement ($p > 0.05$, t-test).

Compound	Amount Added (µg/mL)	Compound	Amount Added (µg/mL)
Amikacin	150	Kanamycin B	160
Amphotericin	20	Lincomycin	200
Ampicillin	50	Methicillin	200
Carbenicillin	2000	Methotrexate	4500
Cefamandole nafate	500	Methylprednisolone	200
Cephalexin	180	Neomycin	100
Cephaloglycin	160	Oxytetracycline	40
Cephaloridine	350	Penicillin V	15 U/mL
Cephalosporin C	160	Prednisolone	200
Cephalothin	1000	Rifampin	50
Chloramphenicol	250	Spectinomycin	300
Ciprofloxacin	200	Streptomycin	200
Clindamycin	150	Sulfadiazine	500
Erythromycin	200	Sulfamethoxazole	200

In addition, the following compounds were spiked into patient serum samples without gentamicin and the following results were obtained. Percent change is calculated as:

$$\% \text{ cross-reactivity} = \frac{(\text{concentration of spiked sample} - \text{concentration of unspiked sample})}{\text{amount of compound spiked}} \times 100$$

Compound	Amount Added (µg/mL)	% Cross-reactivity
Netilmicin	10	24.1
Sisomicin	10	24.8

Interference testing was determined according to CLSI Document EP7-A2.[15]

Sensitivity and Assay Range

The ADVIA Centaur Gentamicin assay measures gentamicin concentrations up to 12 µg/mL (25.1 µmol/L) with a minimum detectable concentration of 0.17 µg/mL (0.36 µmol/L). Analytical sensitivity is defined as the concentration of gentamicin that corresponds to the RLUs that are two standard deviations less than the mean RLUs of 20 replicate determinations of the Gentamicin zero standard.

Method Comparison

For 302 samples in the range of 0.35 to 11.11 µg/mL (0.73 to 23.22 µmol/L), the relationship between the ADVIA Centaur Gentamicin assay and the ACS:180® Gentamicin assay is described by the equation:

ADVIA Centaur Gentamicin = 0.95 (ACS:180 Gentamicin) + 0.18 µg/mL

Correlation coefficient (r) = 0.99

264

Dilution Recovery

Five human serum samples in the range of 4.34 to 5.93 µg/mL (9.07 to 12.40 µmol/L) of gentamicin were diluted 1:2, 1:4, and 1:8 with Multi-Diluent 7 and assayed for recovery and parallelism. The recoveries ranged from 90.6% to 112.8% with a mean of 101.4%.

Sample	Dilution	Observed (µg/mL)	Expected (µg/mL)	Observed (µmol/L)	Expected (µmol/L)	Recovery %
1	—	5.59		11.7		
	1:2	2.73	2.79	5.70	5.84	97.6
	1:4	1.35	1.40	2.80	2.92	96.4
	1:8	0.67	0.70	1.40	1.46	95.3
	Mean					96.4
2	—	5.27		11.0		
	1:2	2.52	2.63	5.30	5.50	95.6
	1:4	1.28	1.32	2.70	2.75	97.2
	1:8	0.60	0.66	1.20	1.38	90.6
	Mean					94.5
3	—	4.34		9.10		
	1:2	2.31	2.17	4.80	4.53	106.5
	1:4	1.22	1.08	2.60	2.27	112.8
	1:8	0.57	0.54	1.20	1.13	106.0
	Mean					108.4
4	—	5.93		12.4		
	1:2	3.01	2.96	6.30	6.19	101.6
	1:4	1.43	1.48	3.00	3.10	96.4
	1:8	0.71	0.74	1.50	1.55	95.3
	Mean					97.8
5	—	5.71		11.9		
	1:2	3.17	2.86	6.60	5.97	110.9
	1:4	1.58	1.43	3.30	2.99	110.5
	1:8	0.77	0.71	1.60	1.49	107.8
	Mean					109.7
Mean						**101.4**

Spiking Recovery

Varying amounts of gentamicin were added to five gentamicin-free normal serum samples. The recoveries ranged from 86.3% to 106.6% with a mean of 96.7%.

Sample	Amount Added (µg/mL)	Observed (µg/mL)	Amount Added (µmol/L)	Observed (µmol/L)	Recovery %
1	—	0	—	0	
	1	0.92	2.09	1.92	92.0
	3	2.75	6.27	5.74	91.7
	5	4.52	10.45	9.44	90.4
	7	6.07	14.63	12.68	86.7
	9	7.77	18.81	16.24	86.3
	Mean				89.4
2	—	0	—	0	
	1	1.04	2.09	2.17	104.0
	3	2.83	6.27	5.91	94.3
	5	4.69	10.45	9.80	93.8
	7	6.52	14.63	13.63	93.1
	9	8.33	18.81	17.41	92.6
	Mean				95.6
3	—	0	—	0	
	1	0.92	2.09	1.92	92.0
	3	2.87	6.27	5.99	95.7
	5	4.88	10.45	10.20	97.6
	7	6.62	14.63	13.84	94.6
	9	8.43	18.81	17.62	93.7
	Mean				94.7
4	—	0	—	0	
	1	1.03	2.09	2.15	103.0
	3	3.03	6.27	6.33	101.0
	5	4.82	10.45	10.07	96.4
	7	7.35	14.63	15.36	105.0
	9	9.23	18.81	19.29	102.6
	Mean				101.5
5	—	0	—	0	
	1	1.04	2.09	2.17	104.0
	3	3.00	6.27	6.27	100.0
	5	5.33	10.45	11.14	106.6
	7	7.44	14.63	15.55	106.3
	9	9.11	18.81	19.04	101.2
	Mean				103.6
Mean					**96.7**

Precision

Four samples were assayed 6 times in 26 assays, on 7 systems (n = 156 for each sample), over a period of 3 days. The following results were obtained:

Mean (µg/mL)	Mean (µmol/L)	Within-run % CV	Run-to-Run % CV	Total % CV
1.52	3.2	5.95	1.99	6.27
4.59	9.6	4.13	2.85	5.01
9.20	19.2	6.85	3.75	7.81
11.78	24.6	5.99	4.96	7.78

Traceability of Standardization

The ADVIA Centaur Gentamicin assay is traceable to an internal standard manufactured using U.S.P. (United States Pharmacopeia) material. Assigned values for calibrators are traceable to this standardization.

Technical Assistance

For customer support, contact your local technical support provider or distributor.

www.siemens.com/diagnostics

References

1. Dipersio JR. Toxicology and therapeutic drug monitoring (TDM). In LA Kaplan and AJ Pesce, Clinical chemistry: theory, analysis, and correlation, 2nd edition. St. Louis: CV Mosby, 1989; 1102–1108.
2. Merritt GJ and Slade JB. Influence of hyperbaric oxygen on the pharmacokinetics of single-dose gentamicin in healthy volunteers. Pharmacotherapy 1993;14(4):382–385.
3. El-Sayed YM. Correlation between nephrotoxicity and pharmacokinetic parameters of gentamicin. J Clin Pharm Ther 1994;19:267–271.
4. Porter WH, Moyer TP. Therapeutic Drug Monitoring. In Burtis CA, Ashwood ER, eds. Tietz textbook of clinical chemistry, 2nd ed. Philadelphia: WB Sanders 1994. p. 1130–1133.
5. Physician's GenRx 1994. New York: Data Pharmaceutica Inc., 1994; pp. II-1016–1020.
6. Madaras-Kelly KJ, et al. Comparison of gentamicin pharmacokinetic parameters determined by fluorescence polarization immunoassay and latex agglutination methods. Therapeutic Drug Monitoring 1994;16:395–399.
7. Semchuk W, Borgmann J, and Bowman L. Determination of a gentamicin loading dose in neonates and infants. Therapeutic Drug Monitoring 1993;15:47–51.
8. Reagent Water Technical Bulletin. Siemens Healthcare Diagnostics, 107060.
9. Clinical and Laboratory Standards Institute (formerly NCCLS). Procedures for the handling and processing of blood specimens; approved guideline - third edition. Wayne, PA: Clinical and Laboratory Standards Institute; 2004. NCCLS Document H18-A3.
10. Centers for Disease Control. 1988. Update: Universal precautions for prevention of transmission of human immunodeficiency virus, hepatitis B virus and other bloodborne pathogens in healthcare settings. MMWR, 37:377–382, 387, 388.
11. Clinical and Laboratory Standards Institute (formerly NCCLS). Protection of laboratory workers from occupationally acquired infections; approved guideline - third edition. Wayne, PA: Clinical and Laboratory Standards Institute; 2005. NCCLS Document M29-A3.
12. Federal Occupational Safety and Health Administration, Bloodborne Pathogens Standard, 29 CFR 1910.1030.
13. Boscato LM, Stuart MC. Heterophilic antibodies: a problem for all immunoassays. Clin Chem 1988;34:27–33.
14. Clinical and Laboratory Standards Institute (formerly NCCLS). How to define and determine reference intervals in the clinical laboratory; approved guideline - second edition. Wayne, PA: Clinical and Laboratory Standards Institute; 2000. NCCLS Document C28-A2.
15. Clinical and Laboratory Standards Institute (formerly NCCLS). Interference testing in clinical chemistry; approved guideline - second edition. Wayne, PA: Clinical and Laboratory Standards Institute; 2005. NCCLS Document EP7-A2.

ADVIA Centaur, ReadyPack, and ACS:180 are trademarks of Siemens Healthcare Diagnostics.
© 2008 Siemens Healthcare Diagnostics Inc. All rights reserved.
US Pats 5,110,932; 5,656,426; 5,609,822; 5,788,928

Origin: US

Siemens Healthcare Diagnostics Inc.
Tarrytown, NY 10591-5097 USA

EC REP Siemens Healthcare Diagnostics Ltd.
Sir William Siemens Sq.
Frimley, Camberley, UK GU16 8QD

Siemens Healthcare
Diagnostics Pty Ltd
885 Mountain Highway
Bayswater Victoria 3153
Australia

シーメンスヘルスケア・
ダイアグノスティクス株式会社
東京都品川区東五反田 3－20－14
Siemens Healthcare Diagnostics
輸入

HCY

CE

Assay Summary

Sample Type	***Serum, EDTA Plasma, Lithium Heparinized Plasma***
Sample Volume	***20 µL***
Calibrator	***HCY***
Sensitivity and Assay Range	***< 0.50 – 65 µmol/L***

Contents

REF	Contents	Number of Tests
09087913 (124578)	5 ReadyPack® primary reagent packs containing ADVIA Centaur® HCY Lite Reagent, Solid Phase, and Enzyme Reagent 5 ReadyPack ancillary reagent packs containing ADVIA Centaur HCY Reducing Reagent RDUC ADVIA Centaur HCY Master Curve card	500
or		
05370300 (124577)	1 ReadyPack primary reagent pack containing ADVIA Centaur HCY Lite Reagent, Solid Phase, and Enzyme Reagent 1 ReadyPack ancillary reagent pack containing ADVIA Centaur HCY Reducing Reagent RDUC ADVIA Centaur HCY Master Curve card	100

For a definition of symbols used in product labeling, please refer to *Understanding the Symbols* in Appendix D.

Intended Use

For *in vitro* diagnostic use in the quantitative determination of total homocysteine (HCY) in serum or plasma using the ADVIA Centaur and ADVIA Centaur XP systems. This diagnostic test is designed to quantitatively measure HCY in serum or plasma. Such measurement can aid in the diagnosis and treatment of patients suspected of having homocysteinuria or hyperhomocysteinemia.

WARNING: Patients taking S-adenosyl-methionine may show falsely elevated levels of HCY. Patients taking methotrexate, nicotinic acid, theophylline, nitrous oxide, or L-dopa can have falsely elevated HCY levels. Refer to *Limitations*.

Heterophilic antibodies in human serum can react with reagent immunoglobulins, interfering with *in vitro* immunoassays. Patients routinely exposed to animals or to animal serum products can be prone to this interference and anomalous values may be observed. Additional information may be required for diagnosis. Refer to *Limitations*.

Materials Required But Not Provided

REF	Description	Contents
05530553 (124579)	HCY Calibrator	2 vials of low calibrator CAL L 2 vials of high calibrator CAL H

Optional Reagents

REF	Description	Contents
03302138 (124581)	ADVIA Centaur HCY Diluent DIL	2 ReadyPack ancillary reagent packs containing 10 mL/pack
09877493 (124553)	HCY Diluent DIL	10 mL/vial
124583	HCY Master Curve Material	6 x 1 mL

Summary and Explanation of the Test

Homocysteine (HCY) is a naturally occurring amino acid that is formed from methionine as a product of numerous S-adenosylmethionine-dependent transmethylation reactions. The metabolism of HCY is regulated by three enzymatic pathways, that either convert HCY into cysteine or remethylate it back into methionine.[1] Homocysteine readily forms disulfide bonds and is present in plasma in three forms: free or unbound HCY (1 to 2%), homocysteine-cysteine or homocystine dimers (10 to 20%), or protein bound (> 80%).[2] Total plasma homocysteine (HCY), free and bound, is commonly referred to as either homocysteine or homocyst(e)ine.

If one or more of the HCY metabolic pathways are inhibited due to enzymatic defects or vitamin deficiencies, HCY accumulates, causing an increased HCY level in plasma. Homocysteinuria is a rare group of genetic diseases where a deficiency in one of the HCY regulating enzymes (usually cystathionine β-synthetase) results in high plasma HCY levels and HCY excretion in urine. Individuals who are homozygous for these disorders can have plasma HCY levels exceeding 400 µmol/L. Individuals who are heterozygous for one of the enzyme deficiencies will exhibit hyperhomocysteinemia and have HCY levels between 20 to 40 µmol/L. Homocysteinemia due to enzyme deficiency has an occurrence of 1 per 100 population.[3] Deficiencies in either folic acid, vitamin B_6, or vitamin B_{12} can produce hyperhomocysteinemia. Other studies showed that chronic renal failure is also associated with elevated HCY levels.[4]

A relationship between homocysteinuria and the development of premature arteriosclerotic disease was first observed over 30 years ago.[5] More recently, several clinical and epidemiological studies have indicated that even a moderately elevated plasma HCY level is a predictor for cardiovascular disease.[6,7,8] In one case-control study,[9] plasma HCY for 750 cases of atherosclerotic vascular disease were compared to 800 controls. The relative risk for vascular disease in the top 20% was 2.2 fold compared to the bottom 80%. A dose-dependent effect was noted between HCY level and risk. Homocysteine levels also have been found to correlate to the extent of atherosclerotic plaque in the aorta.[10] Homocysteine can impair the ability to repair vascular endothelial cell injury, and thus promote the development of atherosclerosis.[11] A 5-year prospective study on the combined effect of hyperhomocysteinemia and type-2 diabetes on mortality in 2484 men and women showed that hyperhomocysteinemia is related to mortality independent of other cardiovascular risk factors and appeared to be a stronger (1.9 fold) risk factor for mortality in type-2 diabetic patients than in nondiabetic subjects.[12]

Assay Principle

The ADVIA Centaur HCY assay is a competitive immunoassay using direct, chemiluminescent technology. The different forms of homocysteine in the patient sample are reduced to free HCY by the Reducing Reagent. Free homocysteine is then converted to S-adenosylhomocysteine (SAH) by the Enzyme Reagent. Converted SAH from the patient sample competes with SAH covalently coupled to paramagnetic particles in the Solid Phase for a limited amount of acridinium ester-labeled anti-SAH in the Lite Reagent.

The system automatically performs the following steps:

- dispenses 20 µL of sample into a cuvette
- dispenses 50 µL of Reducing Reagent and incubates for 3.0 minutes at 37°C

- dispenses 50 µL of Enzyme Reagent and incubates for 2.5 minutes at 37°C
- dispenses 250 µL of Solid Phase and incubates for 2.5 minutes at 37°C
- dispenses 100 µL of Lite Reagent and incubates for 2.5 minutes at 37°C
- separates, aspirates, and washes the cuvettes with reagent water[13]
- dispenses 300 µL each of Acid Reagent and Base Reagent to initiate the chemiluminescent reaction
- reports results according to the selected option, as described in the system operating instructions or in the online help system

An inverse relationship exists between the amount of HCY present in the patient sample and the amount of relative light units (RLUs) detected by the system.

Specimen Collection and Handling

HCY increases in serum or plasma when separation from the cells is delayed. This is due to the conversion of methionine to homocysteine by RBC. Plasma is usually recommended to facilitate rapid centrifugation.[14,15] EDTA plasma and lithium heparinized plasma samples are validated for use in this assay. It is not recommended that plasma and serum from the same patient be used interchangeably for this assay.

The following recommendations for handling and storing blood samples are furnished by the National Committee for Clinical Laboratory Standards (NCCLS):[16]

- Collect all blood samples observing universal precautions for venipuncture.
- Allow serum samples to clot adequately before centrifugation.
- Keep tubes stoppered and upright at all times.
- Freeze samples only once and mix thoroughly after thawing.

The following additional recommendations are for handling and storing HCY samples:

- Centrifuge samples and remove serum or plasma from red blood cells as soon as possible to ensure accurate measurement. Samples that cannot be separated soon after collection should be stored on ice until centrifugation.[14,15]
- Do not store samples at room temperature.
- Tightly cap and refrigerate specimens at 2 to 8°C until testing.
- Freeze samples at or below -20°C if the sample is not assayed within 48 hours. Samples may be stored at or below -20°C for up to 13 weeks.

Before placing samples on the system ensure that:

- Samples are free of fibrin or other particulate matter.
- Samples are free of bubbles.

Reagents

Store the reagents upright at 2–8°C.
Mix all primary reagent packs by hand before loading them onto the system. Visually inspect the bottom of the reagent pack to ensure that all particles are dispersed and resuspended. For detailed information about preparing the reagents for use, refer to Appendix C, *Handling Reagents*.

Reagent Pack	Reagent	Volume	Ingredients	Storage	Stability
ADVIA Centaur HCY ReadyPack primary reagent pack	Lite Reagent	10.0 mL/ reagent pack	monoclonal mouse anti-SAH antibody (~0.4 µg/mL) labeled with acridinium ester in phosphate buffer with bovine serum albumin and preservatives	2–8°C	until the expiration date on the pack label. For onboard stability, refer to *Onboard Stability and Calibration Interval.*
	Solid Phase	25.0 mL/ reagent pack	SAH (~2.1 µg/mL) covalently coupled to paramagnetic particles in phosphate buffer with bovine serum albumin and preservatives	2–8°C	until the expiration date on the pack label. For onboard stability, refer to *Onboard Stability and Calibration Interval.*
	Enzyme Reagent	5.0 mL/ reagent pack	bovine derived S-adenosylhomocysteine hydrolase enzyme (~60 mU/mL) in TRIS buffer with preservatives	2–8°C	until the expiration date on the pack label. For onboard stability, refer to *Onboard Stability and Calibration Interval.*
ADVIA Centaur HCY [RDUC] ReadyPack ancillary reagent pack	Reducing Reagent	10.0 mL/ reagent pack	dithiothreitol (~1.5 mg/mL) in citrate buffer with preservatives	2–8°C	until the expiration date on the pack label or 28 consecutive days after accessing the ancillary reagent pack
ADVIA Centaur HCY [DIL] ReadyPack ancillary reagent pack	HCY Diluent	10.0 mL/ reagent pack	phosphate buffer with bovine gamma globulin and preservatives	2–8°C	until the expiration date on the pack label or 41 consecutive days after accessing the ancillary reagent pack

CAUTION: This device contains material of animal origin and should be handled as a potential carrier and transmitter of disease.

For *In Vitro* Diagnostic Use.

Loading Reagents

Ensure that the system has sufficient primary and ancillary reagent packs. For detailed information about preparing the system, refer to the system operating instructions or to the online help system.

CAUTION: Mix all primary reagent packs by hand before loading them onto the system. Visually inspect the bottom of the reagent pack to ensure that all particles are dispersed and resuspended. For detailed information about preparing the reagents for use, refer to Appendix C, *Handling Reagents*.

Load the ReadyPack reagent packs in the primary reagent area using the arrows as a placement guide. The system automatically mixes the primary reagent packs to maintain homogeneous suspension of the reagents. Load the HCY Reducing Reagent ReadyPack reagent pack in the ancillary reagent entry. For detailed information about loading reagents, refer to the system operating instructions or to the online help system.

If automatic dilution of a sample is required, load ADVIA Centaur HCY Diluent in the ancillary reagent entry.

Onboard Stability and Calibration Interval

Onboard Stability	Calibration Interval
28 days	14 days

Additionally, the ADVIA Centaur HCY assay requires a two-point calibration:

- when changing lot numbers of primary reagent packs
- when replacing system components
- when quality control results are repeatedly out of range

CAUTION:

- Discard the primary reagent packs at the end of the onboard stability interval.
- Do not use reagents beyond the expiration date.

Master Curve Calibration

The ADVIA Centaur HCY assay requires a Master Curve calibration when using a new lot number of Lite Reagent, Solid Phase, and Enzyme Reagent. For each new lot number of Lite Reagent, Solid Phase, and Enzyme Reagent, use the barcode reader or keyboard to enter the Master Curve values on the system. The Master Curve card contains the Master Curve values. For detailed information about entering calibration values, refer to the system operating instructions or to the online help system.

Quality Control

For detailed information about entering quality control values, refer to the system operating instructions or to the online help system.

To monitor system performance and chart trends, as a minimum requirement, two levels of quality control material should be assayed on each day that samples are analyzed. Quality control samples should also be assayed when performing a two-point calibration. Treat all quality control samples the same as patient samples.

Siemens Healthcare Diagnostics recommends the use of Bio-Rad Liquichek Homocysteine Control or equivalent commercially available control materials with at least 2 levels (low and high). A satisfactory level of performance is achieved when the analyte values obtained are within the Acceptable Control range for the system or within your range, as determined by an appropriate internal laboratory quality control scheme. If the quality control results do not fall within the Expected Values or within the laboratory's established values, do not report results. Take the following actions:

- Verify that the materials are not expired.
- Verify that required maintenance was performed.
- Verify that the assay was performed according to the instructions for use.
- Rerun the assay with fresh quality control samples.
- If necessary, contact your local technical support provider or distributor for assistance.

Sample Volume

This assay requires 20 µL of sample for a single determination. This volume does not include the unusable volume in the sample container or the additional volume required when performing duplicates or other tests on the same sample. For detailed information about determining the minimum required volume, refer to *Sample Volume Requirements* in the *ADVIA Centaur Reference Manual.*

NOTE: The sample volume required to perform onboard dilution differs from the sample volume required to perform a single determination. Refer to the following information for the sample volume required to perform onboard dilutions:

Dilution	Sample Volume (µL)
1:2	80
1:10	30

Assay Procedure

For detailed procedural information, refer to the system operating instructions or to the online help system.

Procedural Notes

Calculations

For detailed information about how the system calculates results, refer to the system operating instructions or to the online help system.

The system reports HCY results in µmol/L.

Dilutions

- Samples with HCY levels greater than 65 µmol/L must be diluted and retested to obtain accurate results.
- Patient samples can be automatically diluted by the system or prepared manually.
- For automatic dilutions, ensure that ADVIA Centaur HCY Diluent is loaded and set the system parameters as follows:

  Dilution point: ≤ 65 µmol/L

  Dilution factor: 2, 10

  For detailed information about automatic dilutions, refer to the system operating instructions or to the online help system.
- Manually dilute the patient samples when patient results exceed the linearity of the assay using automatic dilution, or when laboratory protocol requires manual dilution.
- Use HCY Diluent to manually dilute patient samples, and then load the diluted sample in the sample rack, replacing the undiluted sample.
- Ensure that results are mathematically corrected for dilution. If a dilution factor is entered when scheduling the test, the system automatically calculates the result.

Disposal

Dispose of hazardous and biologically contaminated materials according to the practices of your institution. Discard all materials in a safe and acceptable manner and in compliance with all federal, state, and local requirements.

Limitations

Evaluation of serum samples resulted in a median 9% increase in observed values compared to EDTA plasma samples. This was obtained from a comparison of values for 62 pairs of EDTA plasma and serum samples ranging from 5.3 to 16.4 µmol/L.

Patients taking methotrexate, nicotinic acid, theophylline, nitrous oxide, or L-dopa can have falsely elevated serum or plasma HCY levels.[7]

S-adenosyl-methionine is an antidepressant that is structurally similar to S-adenosyl-homocysteine. Individuals taking this drug may show falsely elevated levels of HCY. Refer to *Specificity* for the cross-reactivity of S-adenosyl-methionine.

It is not recommended that plasma and serum samples from the same patient be used interchangeably with this assay. Reference ranges should be established for the evaluation of serum or plasma sample types.

Heterophilic antibodies in human serum can react with reagent immunoglobulins, interfering with *in vitro* immunoassays.[17] Patients routinely exposed to animals or to animal serum products can be prone to this interference and anomalous values may be observed. Additional information may be required for diagnosis.

Serum specimens that are . . .	Demonstrate the following changes . . .
hemolyzed	up to 1.4% increase with 1000 mg/dL of hemoglobin
lipemic	up to 2.5% increase with 1300 mg/dL of lipid
icteric	up to 2.8% increase with 25.0 mg/dL of bilirubin
proteinemic	up to 1.4% increase with 6.5 g/dL of protein

Expected Results

Fasting EDTA samples were drawn from 119 healthy donors with no history of heart disease and were tested for their HCY levels using the ADVIA Centaur HCY assay. The donors consisted of 59 women and 60 men, all between the ages of 18 and 61. The mean HCY concentration was determined to be 8.2 µmol/L with a one-tailed 95th percentile range of 3.7 to 13.9 µmol/L.

As with all *in vitro* diagnostic assays, each laboratory should determine its own reference range(s) for the diagnostic evaluation of patient results.[18]

Performance Characteristics

Specificity

The ADVIA Centaur HCY assay shows high specificity for S-adenosyl-homocysteine, the enzymatically converted form of L-homocysteine. The following compounds were added at the concentration indicated to a sample with known HCY concentration. ADVIA Centaur HCY assay results from the spiked samples were compared with those of unspiked control samples. Percent cross-reactivity is calculated as:

$$\% \text{ cross-reactivity} = \frac{(\text{concentration of spiked sample} - \text{concentration of unspiked sample})}{\text{concentration of compound}} \times 100$$

Compound	Amount (µmol/L)	% Cross-reactivity
Adenosine	900	< 0.01
S-adenosyl-L-methionine	80	6.6
L-Cystathionine	500	0.01
L-Cysteine	8000	0.03
L-methionine	800	0.21
Glutathione	500	< 0.01
NAD	1000	0.12
Homocysteine Thiolactone	50	1.3

Interference testing was determined according to NCCLS Document EP7-P.[19]

Sensitivity and Assay Range

The ADVIA Centaur HCY assay measures homocysteine concentrations up to 65 µmol/L with a minimum detectable concentration of ≤ 0.50 µmol/L. Analytical sensitivity is defined as the concentration of HCY that corresponds to the RLUs that are two standard deviations less than the mean RLUs of 30 replicate determinations of the HCY zero standard.

Method Comparison

For 324 patient samples in the range of 5.1 to 44.0 µmol/L, the relationship between the ADVIA Centaur HCY assay and an alternate HCY FPIA assay is described by the equation:

ADVIA Centaur HCY = 1.11 (alternate method) + 0.84 µmol/L

Correlation coefficient (r) = 0.946

For 35 patient samples in the range of 16.1 to 45.4 µmol/L, the relationship between the ADVIA Centaur HCY assay and an alternate HCY HPLC assay is described by the equation:

ADVIA Centaur HCY = 1.12 (alternate method) + 1.89 µmol/L

Correlation coefficient (r) = 0.945

Dilution Recovery

Two samples with HCY concentrations near the upper range of the assay were diluted 1:2 and 1:10 with HCY Diluent and assayed for recovery and parallelism. The recoveries ranged from 87.5% to 101.4% with a mean of 93.8%.

Sample	Dilution	Observed (µmol/L)	Expected (µmol/L)	Recovery %
Serum	—	56.1		
	1:2	28.5	28.1	101.4
	1:10	4.9	5.6	87.5
	Mean			94.5
Plasma	—	64.1		
	1:2	30.7	32.1	95.6
	1:10	5.8	6.4	90.6
	Mean			93.1
Mean				**93.8**

Spiking Recovery

Varying amounts of homocystine were added to one serum sample and one EDTA plasma sample with endogenous HCY levels of 10.4 and 11.3 µmol/L, respectively. The amount of homocystine that was added varied from 12.7 to 50.8 µmol/L. As one homocystine molecule is reduced to two homocysteine molecules, the recovery should be exactly double what is spiked in. When compared to the expected value, the measured (recovered) values of HCY ranged from 94.4 to 104.9 with a mean of 100.5.

Sample	HCY Added (µmol/L)	Observed (µmol/L)	Expected (µmol/L)	Recovery %
Serum	—	10.4		
	12.7	23.9	23.1	103.4
	25.4	36.6	35.8	102.3
	38.1	45.8	48.5	94.4
	50.8	59.2	61.2	96.7
	Mean			99.2

Sample	HCY Added (µmol/L)	Observed (µmol/L)	Expected (µmol/L)	Recovery %
EDTA Plasma	—	11.3		
	12.7	25.3	24.1	104.9
	25.4	37.4	36.8	101.6
	38.1	49.7	49.5	100.4
	50.8	61.8	62.2	99.3
	Mean			101.7
Mean				**100.5**

Precision

Seven samples were assayed 3 times for 20 days, 1 run per day, using a stored calibration. The total number of replicates was 60 for each sample. The following results were obtained:

Mean HCY (µmol/L)	Within-run % CV	Run-to-run % CV	Total % CV
4.9	4.4	5.2	6.8
7.9	4.2	2.6	4.9
9.9	3.7	2.9	4.7
22.2	3.0	1.5	5.4
26.4	2.5	2.5	3.5
43.0	2.6	4.0	4.7
61.6	2.3	3.1	3.9

Standardization

The ADVIA Centaur HCY assay is traceable to an internal standard manufactured using highly purified material. Assigned values of calibrators are traceable to this standardization.

Technical Assistance

For customer support, please contact your local technical support provider or distributor.

www.siemens.com/diagnostics

References

1. Refsum H, Ueland PM, Nygard O, Vollset SE. Homocysteine and cardiovascular disease. Annu Rev Medicine 1998;49:31-62.
2. Langman LJ, Cole DE. Homocysteine: Cholesterol of the 90s? Clinica Chimica Acta 1999;286:63-80.
3. Alpert MA. Homocyst(e)ine, atherosclerosis, and thrombosis. South Med J 1999;92(9): 858-865.
4. Welch GN, Loscalzo J. Homocysteine and atherothrombosis. N Eng J Med 1998;338(15):1042-50.
5. McCully KS. Vascular pathology of homocysteinemia: implications for the pathogenesis of arteriosclerosis. Am J Pathol 1969;56:111-28.
6. Verhoef P, Kok FJ, Kruyssen DA, Schouten EG, Witteman JC, Grobbee DE, Ueland PM, Refsum H. Plasma total homocysteine, B vitamins and risk of coronary atheroscleosis. Arterioscler Throm Vasc Biol 1997;17: 989-95.
7. Malinow MR, Bostom AG, Krauss RM. Homocyst(e)ine, diet, and cardiovascular diseases a statement for healthcare professionals from the Nutrition Committee, American Heart Association. Circulation 1999; 99:178-82.
8. Nygard O, Nordrehaug JE, Refsum H, Ueland PM, Farstad M, Vollset, SE. Plasma homocysteine levels and mortality in patients with coronary artery disease. N Engl J Med 1997;337:230-6.
9. Graham IM, Daly LE, Refsum HM, Robinson K, Brattstrom LE, Ueland PM, Palma-Reis RJ, Boers GH, Sheahan RG, Israelsson B, Uiterwaal CS, Meleady R, McMaster D, Verhoef P, Witteman J, Rubba P, Bellet H, Wautrecht JC, de Valk HW, Sales Luis AC, Parrot-Rouland FM, Tan KS, Higgins I, Garcon D, Andria G, et al. Plasma homocysteine as a risk factor for vascular disease. JAMA 1997;277(22): 1775-81.
10. Konecky N, Malinow MR, Tunick PA, Freedberg RS, Rosenzweig BP, Katz ES, Hess DL, Upson B, Leung B, Perez J, Kronzon I. Correlation between plasma homocyst(e)ine and aortic atherosclerosis. Am Heart J 1997;133:534-40.
11. Wang H, Yoshizumi M, Lai K, Tsai JC, Perrella MA, Haber E, Lee ME. Inhibition of growth and p21 methylation in vascular endothelial cells by homocysteine but not cysteine. J Biol Chem 1997;272(40):25380-385.
12. Hoogeveen EK, Kostense PJ, Jakobs C, Dekker JM, Nijpels G, Heine RJ, Bouter LM, Stehouwer CD. Hyperhomocysteinemia increases risk of death, especially in type-2 diabetes: 5-year follow-up of the Hoorn Study. Circulation 2000;101:1506-1511.
13. Reagent Water Technical Bulletin. Siemens Healthcare Diagnostics, 107060.
14. Still RA, McDowell IF. Clinical implications of plasma homocysteine measurement in cardiovascular disease. JCP 1998;51(3):183-88.
15. Ubbink JB, Vermaak WJ, van der Merwe A, Becker PJ. The effect of blood sample aging and food consumption on plasma total homocysteine levels. Clinica Chimica Acta 1992;207:119-128.
16. National Committee for Clinical Laboratory Standards. Procedures for handling and processing of blood specimens; second edition; approved guideline. NCCLS Document H18-A2; Wayne (PA): NCCLS; 1999 Oct. 40p.
17. Boscato LM, Stuart MC. Heterophilic antibodies: a problem for all immunoassays. Clin Chem 1988;34:27–33.
18. National Committee for Clinical Laboratory Standards. How to define, determine, and utilize reference intervals in the clinical laboratory; approved guideline. NCCLS Document C28-A. Wayne (PA): NCCLS; 1995.
19. National Committee for Clinical Laboratory Standards. Interference testing in clinical chemistry; proposed guideline. NCCLS Document EP7-P. Wayne (PA):NCCLS; 1986.

ADVIA Centaur and ReadyPack are trademarks of Siemens Healthcare Diagnostics.
© 2008 Siemens Healthcare Diagnostics Inc. All rights reserved.
US Pats 4,745,181; 4,918,192; 5,110,932; 5,609,822; 5,788,928

Origin: US

Siemens Healthcare Diagnostics Inc.
Tarrytown, NY 10591-5097 USA

EC REP Siemens Healthcare Diagnostics Ltd.
Sir William Siemens Sq.
Frimley, Camberley, UK GU16 8QD

Siemens Healthcare
Diagnostics Pty Ltd
885 Mountain Highway
Bayswater Victoria 3153
Australia

シーメンスヘルスケア・
ダイアグノスティクス株式会社
東京都品川区東五反田 3－20－14
Siemens Healthcare Diagnostics
輸入

K32

HER-2/*neu* (H2n)

CE

FDA CDRH DMC
APR 2 6 2011
Received

Assay Summary

Sample Type	**Serum**
Sample Volume	**20 µL**
Calibrator	**H2n**
Sensitivity and Assay Range	**0.5 – 350 ng/mL**

Contents

REF	Contents	Number of Tests
00915031	1 ReadyPack® primary reagent pack containing ADVIA Centaur® H2n Lite Reagent, Solid Phase, and Fluorescein Conjugate Reagent ADVIA Centaur H2n Master Curve card	50

For a definition of symbols used in product labeling, please refer to *Understanding the Symbols* in Appendix D.

Intended Use

For *in vitro* diagnostic use in the quantitative determination of the HER-2/*neu* protein in human serum using the ADVIA Centaur and ADVIA Centaur XP systems. HER-2/*neu* values obtained may be used in the follow-up and monitoring of patients with metastatic breast cancer whose initial serum HER-2/*neu* level is greater than 15 ng/mL. HER-2/*neu* values should be used in conjunction with information available from clinical and other diagnostic procedures in the management of breast cancer. The clinical utility of the measurement of HER-2/*neu* in serum as a prognostic indicator for early recurrence and in the management of patients on immunotherapy has not been fully established. This test should be used by or under the order of a physician. This assay is not intended for use on any other system.

Materials Required But Not Provided

REF	Description	Contents
00913551	H2n Calibrator	2 x 2.0 mL low calibrator CAL L 2 x 2.0 mL high calibrator CAL H

Optional Reagents

REF	Description	Contents
07907174 (110313)	ADVIA Centaur Multi-Diluent 1 M-DIL 1	6 ReadyPack ancillary reagent packs containing 25 mL/pack
07293184 (110312)	ADVIA Centaur Multi-Diluent 1 M-DIL 1	2 ReadyPack ancillary reagent packs containing 25 mL/pack
09348792 (672177)	Multi-Diluent 1 M-DIL 1	50 mL/vial
00913276	H2n quality control material	2 x 2.0 mL Control 1 CONTROL 1 2 x 2.0 mL Control 2 CONTROL 2
131217	H2n Master Curve Material	7 x 1 mL

Summary and Explanation of the Test

The HER-2/*neu* oncogene (*erb*B-2) encodes a protein with a molecular weight of 185,000 daltons (p185). This oncogene belongs to a family of cell surface receptors with intracellular tyrosine kinase activity, and is structurally related to the Epidermal Growth Factor Receptor (*erb*B-1). The HER-2/*neu* protein is composed of a cytoplasmic domain, a transmembrane domain, and an extracellular domain (ECD).[1-3] Since the mid-1980s the HER-2/*neu* oncogene and its protein product have been reported to play a role in the development and metastasis of breast cancer.[4,5] The shed ECD has been shown to be a glycoprotein, usually referred to as p105, with a molecular weight ranging from 97 kilodaltons to 115 kilodaltons.[6-8] Numerous reports have shown that ECD is shed in the blood of normal individuals and is elevated in a subset of women with metastatic breast cancer.[9-12] In addition, there are reports that HER-2/*neu* protein is overexpressed in a number of other tumor types of epithelial origin, including lung, hepatocellular, pancreatic, colon, stomach, ovarian, cervical, and bladder cancer.[13-22]

Assay Principle

The ADVIA Centaur HER-2/*neu* assay is a fully automated, two-site sandwich immunoassay using direct, chemiluminescent technology. The Lite Reagent is composed of the monoclonal mouse antibody, TA-1, labeled with acridinium ester. The Fluorescein Conjugate Reagent is composed of the monoclonal mouse antibody, NB-3, labeled with fluorescein. These two monoclonal antibodies are specific for unique epitopes on the ECD of HER-2/*neu*. The Solid Phase is composed of purified anti-fluorescein monoclonal mouse capture antibody, which is covalently coupled to paramagnetic particles. The sample is incubated with Fluorescein Conjugate Reagent and Lite Reagent simultaneously for 5.5 minutes. After this incubation, the Solid Phase is added and the mixture is incubated for an additional 2.75 minutes. After this final incubation, the immuno-complex formed is washed with water prior to initiation of the chemiluminescent reaction.

The system automatically performs the following steps:

- dispenses 20 µL of sample into a cuvette
- dispenses 50 µL of Fluorescein Conjugate Reagent and 50 µL of Lite Reagent simultaneously and incubates for 5.5 minutes at 37°C
- dispenses 250 µL of Solid Phase and incubates for 2.75 minutes at 37°C
- separates, aspirates and washes the cuvettes with Type II reagent water[23]
- dispenses 300 µL each of Acid Reagent and Base Reagent to initiate the chemiluminescent reaction
- reports results according to the selected option, as described in the system operating instructions or in the online help system

A direct relationship exists between the amount of HER-2/*neu* present in the patient sample and the amount of relative light units (RLUs) detected by the system.

Specimen Collection and Handling

Serum is the recommended sample type for this assay.

The following recommendations for handling and storing blood samples are furnished by the National Committee for Clinical Laboratory Standards:[24]

- Collect all blood samples observing universal precautions for venipuncture.
- To prepare sera, allow samples to clot adequately before centrifugation.
- Keep tubes stoppered and upright at all times.

284

- Do not use samples that have been stored at room temperature for longer than 8 hours.
- Tightly cap and refrigerate specimens at 2 to 8°C if the assay is not completed within 8 hours.
- Freeze samples at or below -20°C if the sample is not assayed within 24 hours. Frozen samples should be thawed, mixed thoroughly, and centrifuged before use to ensure consistency of results. Avoid repeated freezing and thawing.

Before placing samples on the system ensure that:

- Samples are free of fibrin or other particulate matter. Remove particulates by centrifugation at 1000 x g for 15 to 20 minutes.
- Samples are free of bubbles.

Reagents

Store the reagents upright at 2–8°C.
Mix all primary reagent packs by hand before loading them onto the system. Visually inspect the bottom of the reagent pack to ensure that all particles are dispersed and resuspended. For detailed information about preparing the reagents for use, refer to Appendix C, *Handling Reagents*.

Protect from sunlight
Protect reagent packs from all light sources. Reagent packs loaded on the system are protected from light. Store unused reagent packs at 2–8°C away from light sources.

Reagent Pack	Reagent	Volume	Ingredients	Storage	Stability
ADVIA Centaur H2n ReadyPack primary reagent pack	Lite Reagent	2.5 mL/ reagent pack	monoclonal mouse anti-human HER-2/*neu* antibody (~1.8 µg/mL) labeled with acridinium ester in phosphate buffer with bovine serum albumin and sodium azide (< 0.1%)	2–8°C	until the expiration date on the pack label. For onboard stability, refer to *Onboard Stability and Calibration Interval.*
	Solid Phase	12.5 mL/ reagent pack	monoclonal mouse anti-fluorescein antibody (~30 µg/mL) coupled to paramagnetic particles in phosphate buffer with bovine serum albumin and sodium azide (< 0.1%)	2–8°C	until the expiration date on the pack label. For onboard stability, refer to *Onboard Stability and Calibration Interval.*
	Fluorescein Conjugate Reagent	2.5 mL/ reagent pack	monoclonal mouse anti-human HER-2/*neu* antibody (~7.0 µg/mL) labeled with fluorescein in PIPES buffer with bovine serum albumin and sodium azide (< 0.1%)	2–8°C	until the expiration date on the pack label. For onboard stability, refer to *Onboard Stability and Calibration Interval.*
ADVIA Centaur M-DIL 1 ReadyPack ancillary reagent pack	Multi-Diluent 1	25.0 mL/ reagent pack	equine serum with sodium azide (0.1%) and preservatives	2–8°C	until the expiration date on the pack label or 28 consecutive days after accessing the ancillary reagent pack

CAUTION: Sodium azide can react with copper and lead plumbing to form explosive metal azides. On disposal, flush reagents with a large volume of water to prevent the build-up of azides, if disposal into a drain is in compliance with federal, state and local requirements.

CAUTION: This device contains material of animal origin and should be handled as a potential carrier and transmitter of disease.

For *In Vitro* Diagnostic Use.

Loading Reagents

Ensure that the system has sufficient primary and ancillary reagent packs. For detailed information about preparing the system, refer to the system operating instructions or to the online help system.

Use this procedure to mix ADVIA Centaur HER-2/*neu* primary reagent packs that are unpierced.

CAUTION: Do not use this procedure for pierced ADVIA Centaur HER-2/*neu* reagent packs. Discard pierced ADVIA Centaur HER-2/*neu* reagent packs that have been removed from the system.

1. Hold the reagent pack firmly with thumb on one side and fingers on the other side. Shake vigorously for 15 seconds, using a back and forth motion.

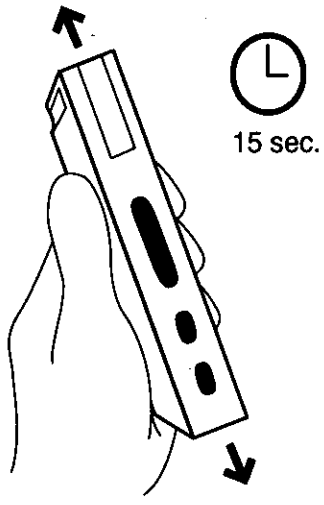

2. Hold the reagent pack firmly at one end, with film side up, and tap sharply on a bench top five times to reduce foaming caused by shaking.

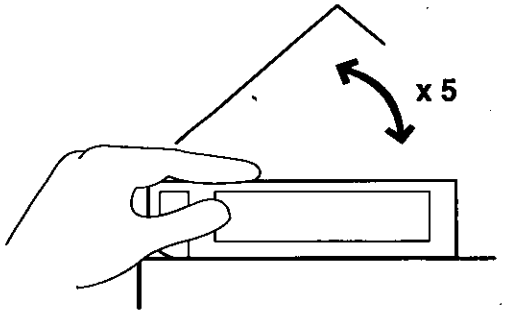

Visually inspect the bottom of the reagent pack to ensure that all particles are dispersed and resuspended.

Load the unpierced ReadyPack reagent packs in the primary reagent area using the arrows as a placement guide. The system automatically mixes the primary reagent packs to maintain homogeneous suspension of the reagents. For detailed information about loading reagents, refer to the system operating instructions or to the online help system.

If automatic dilution of a sample is required, load ADVIA Centaur Multi-Diluent 1 in the ancillary reagent entry.

286

Onboard Stability and Calibration Interval

Onboard Stability	Calibration Interval
41 days	14 days

Additionally, the ADVIA Centaur HER-2/*neu* assay requires a two-point calibration:

- when changing lot numbers of primary reagent packs
- when replacing system components
- when quality control results are repeatedly out of range

CAUTION:

- Discard the primary reagent packs at the end of the onboard stability interval.
- Do not use reagents beyond the expiration date.

Master Curve Calibration

The ADVIA Centaur HER-2/*neu* assay requires a Master Curve calibration when using a new lot number of ReadyPack reagent packs. For each new lot of reagents, use the barcode reader or keyboard to enter the Master Curve values on the system. The Master Curve card contains the Master Curve values. For detailed information about entering calibration values, refer to the system operating instructions or to the online help system.

Quality Control

For detailed information about entering quality control values, refer to the system operating instructions or to the online help system.

To monitor system performance and chart trends, as a minimum requirement, two levels of quality control material should be assayed on each day that samples are analyzed. Quality control samples should also be assayed when performing a two-point calibration. Treat all quality control samples the same as patient samples.

For quality control of the ADVIA Centaur HER-2/*neu* assay, use the HER-2/*neu* or an equivalent quality control material. Refer to the target value sheet for the suggested Expected Values. If the quality control results do not fall within the Expected Values or within the laboratory's established values, do not report results. Take the following actions:

- Verify that the materials are not expired.
- Verify that required maintenance was performed.
- Verify that the assay was performed according to the instructions for use.
- Rerun the assay with fresh quality control samples.
- If necessary, contact your local technical support provider or distributor for assistance.

Sample Volume

This assay requires 20 µL of sample for a single determination. This volume does not include the unusable volume in the sample container or the additional volume required when performing duplicates or other tests on the same sample. For detailed information about determining the minimum required volume, refer to *Sample Volume Requirements* in the *ADVIA Centaur Reference Manual.*

Assay Procedure

For detailed procedural information, refer to the system operating instructions or to the online help system.

Procedural Notes

Calculations

For detailed information about how the system calculates results, refer to the system operating instructions or to the online help system.

Dilutions

- Samples with HER-2/*neu* levels greater than 350 ng/mL must be diluted and retested to obtain accurate results.
- Patient samples can be automatically diluted by the system or prepared manually.
- For automatic dilutions, ensure that ADVIA Centaur Multi-Diluent 1 is loaded and set the system parameters as follows:

  Dilution point: ≤ 350 ng/mL

  Dilution factor: 10, 20

  For detailed information about automatic dilutions, refer to the system operating instructions or to the online help system.
- Manually dilute patient samples when patient results exceed those values obtained by automatic dilution, or when laboratory protocol requires manual dilution.
- Use Multi-Diluent 1 to manually dilute patient samples, and then load the diluted sample in the sample rack, replacing the undiluted sample.
- Ensure that results are mathematically corrected for dilution. If a dilution factor is entered when scheduling the test, the system automatically calculates the result.

High Dose Hook Effect

Patient samples with high HER-2/*neu* levels can cause paradoxical decreases in the relative light units (RLUs). This is known as a high dose hook effect. However, in this assay, HER-2/*neu* levels as high as 20,000 ng/mL will assay greater than 350 ng/mL.

Disposal

Dispose of hazardous or biologically contaminated materials according to the practices of your institution. Discard all materials in a safe and acceptable manner, and in compliance with all federal, state, and local requirements.

Limitations

NOTE: Do not interpret levels of HER-2/*neu* as absolute evidence of the presence or the absence of malignant disease. Before treatment, patients with confirmed breast carcinoma frequently have levels of HER-2/*neu* within the range observed in healthy individuals. Additionally, elevated levels of HER-2/*neu* may be observed in patients with nonmalignant diseases or malignant diseases other than breast cancer. Measurements of HER-2/*neu* should always be used in conjunction with other diagnostic procedures, including information from the patient's clinical evaluation.

WARNING: Do not use the ADVIA Centaur HER-2/*neu* assay as a screening test or for diagnosis. Normal levels of HER-2/*neu* do not preclude the presence of disease.

Heterophilic antibodies in human serum can react with reagent immunoglobulins, interfering with *in vitro* immunoassays.[25] Patients routinely exposed to animals or to animal serum products may develop heterophilic antibodies which may cause interference in immunoassays and, thus, anomalous values may be observed.

288

Evidence suggests that patients undergoing retinal fluorescein angiography can retain amounts of fluorescein in the body for up to 36 to 48 hours post-treatment. In the cases of patients with renal insufficiency, including many diabetics, retention could be much longer. Such samples can produce falsely depressed values when tested with this assay, and should not be evaluated.[26]

Exercise caution when interpreting ADVIA Centaur HER-2/*neu* levels during pregnancy.[27]

Endogenous interfering substances, such as high concentrations of hemoglobin, lipids, and bilirubin, have no effect beyond the limits of random within-run variations. Mean recoveries were within 2% of the control level for all interfering substances tested.

Substance	Amount	% Recovery
Conjugated Bilirubin	25 mg/dL	100.1
Unconjugated Bilirubin	25 mg/dL	101.5
Triglycerides	0.9 g/dL	101.4
Hemoglobin	1.0 g/dL	98.5
Cholesterol	500 mg/dL	100.4

Expected Results

To establish the performance characteristics of the ADVIA Centaur HER-2/*neu* assay, serum samples from 200 apparently healthy females were tested. The Upper Limit of Normal (ULN) for this group, defined as the 95th percentile of the observed results, was 15.2 ng/mL.

As with all *in vitro* diagnostic assays, each laboratory should determine its own reference range(s) for the diagnostic evaluation of patient results.[28]

Figure 1: Distribution of ADVIA Centaur HER-2/*neu* Assay Values for Healthy Females

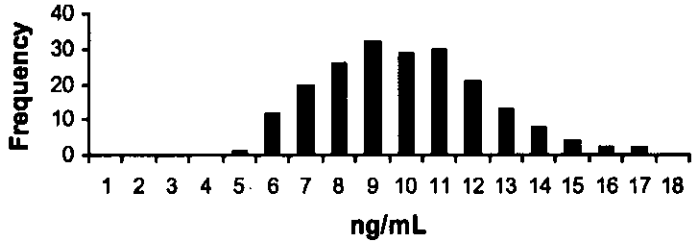

The clinical utility of Bayer Immuno 1® HER-2/*neu* assay, the predicate device for the ADVIA Centaur HER-2/*neu* assay, in monitoring patients with metastatic breast cancer was evaluated using retrospective serum samples from three clinical sites in the United States. HER-2/*neu* values were measured in 60 patients with metastatic breast cancer over a 6–12 month period. These results were then separated into groups that either demonstrated HER-2/*neu* values that paralleled the clinical course of disease, or HER-2/*neu* values that did not parallel the clinical course of disease. Serial measurements were analyzed visit-to-visit. Serial changes in HER-2/*neu* were correlated with changes in clinical status for all patients whose pre-treatment HER-2/*neu* values exceeded 15 ng/mL. For each pair of serial measurements, an increase of equal or greater than 15% was considered to indicate progression, and a change of less than 15% increase was considered to indicate a lack of progression. The following table shows the overall correspondence of the serial HER-2/*neu* change compared to changes in clinical status.

Monitoring Metastatic Breast Cancer Patients for Changes in Disease Status: Correspondence of Serial HER-2/*neu* Changes and Clinical Status

	Bayer Immuno 1 HER-2/neu		
Clinical Status	*Progression*	*Lack of Progression*	*Total*
≥15% increase	66	33	99
<15% increase	45	109	154
Total	111	142	253

Concordance = (109 + 66)/253 = 69.2% (CI 63.3%–74.6%)

Predictive Value (Lack of Progression) = 109/154 = 70.8% (CI 63.2%–77.4%)

Predictive Value (Progression) = 66/99 = 66.7% (CI 56.9%–75.2%)

Profiles of two selected patients with metastatic breast cancer in which longitudinal changes in Bayer Immuno 1 HER-2/*neu* values correlate with changes in disease status are shown in Figures 2 and 3.

Figure 2: Monitoring of a 38-Year Old Stage IV Breast Cancer Patient with the Bayer Immuno 1 HER-2/*neu* Assay

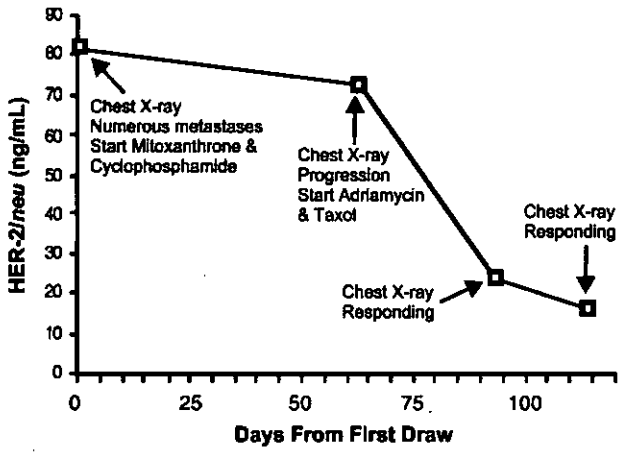

Figure 3: Monitoring of a 74-Year Old Stage IV Breast Cancer Patient with the Bayer Immuno 1 HER-2/*neu* Assay

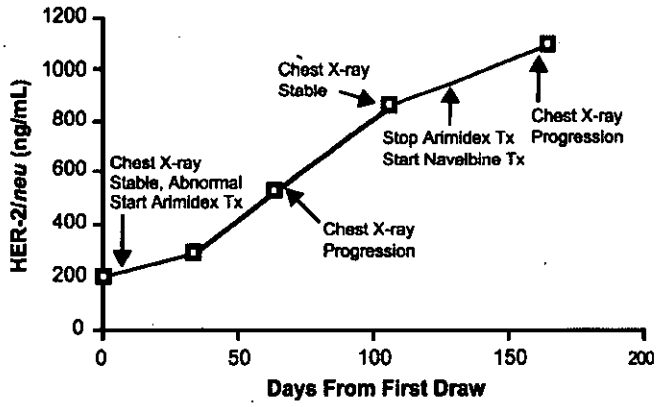

Performance Characteristics

Specificity

The potential interference of therapeutic agents was tested by adding these substances to two serum pools containing approximately 15 ng/mL and 125 ng/mL of HER-2/*neu*. The therapeutic agents were spiked into these serum pools to the final concentration indicated in the following table. These spiked pools were assayed for HER-2/*neu* and the percent recovery to the unspiked pool was calculated.

Substance	Amount Added (µg/mL)	Mean % Recovery
Cis-Platinum	175	99.2
Cyclophosphamide	800	102.2
Diethylstilbesterol	25	99.2
Doxorubicin HCl	50	99.5
Etoposide	10	100.6
5-Fluorouracil	1	102.4
Herceptin	400	100.4
Megestrol acetate	10	99.2
Methotrexate	500	103.5
Mitomycin C	75	102.6
Paclitaxel	50	99.8
Tamoxifen	60	97.1
Vinblastine	1.5	99.7
Vincristine	1.5	99.3

Interference testing was determined according to NCCLS Document EP7-P.[29]

Cross reactivity with human Epidermal Growth Factor Receptor (EGFR or HER-1) at levels up to 10,467 ng/mL was negligible at 0.04%.

Sensitivity and Assay Range

The ADVIA Centaur HER-2/*neu* assay measures HER-2/*neu* concentrations in serum up to 350 ng/mL with a minimum detectable concentration (analytical sensitivity) of 0.5 ng/mL. Analytical sensitivity is defined as the concentration of HER-2/*neu* that corresponds to the RLUs that are two standard deviations more than the mean RLUs of 20 replicate determinations of the HER-2/*neu* zero standard. This response is an estimate of the minimum detectable concentration with 95% confidence.

Method Comparison

For 580 samples in the range of 3.0 to 249 ng/mL the relationship of the ADVIA Centaur HER-2/*neu* assay to Bayer Immuno 1 HER-2/*neu* assay is described by the following equation:

ADVIA Centaur HER-2/*neu* = 1.11 (Bayer Immuno 1) – 1.38 ng/mL

Correlation coefficient (r) = 0.99

Figure 4: Method Comparison for ADVIA Centaur HER-2/*neu* Assay vs. Bayer Immuno 1 HER-2/*neu* Assay

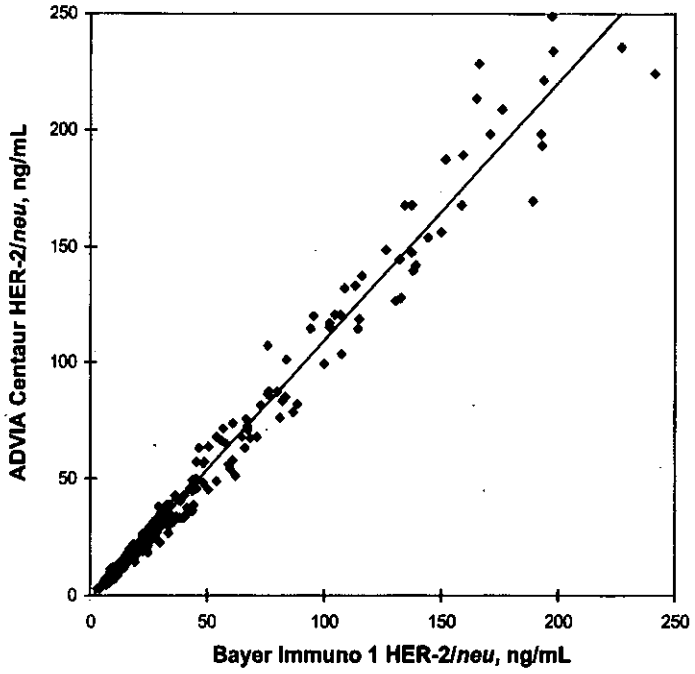

Dilution Recovery

Five samples with concentrations of HER-2/*neu* in the range of 245.1 to 379.3 ng/mL were diluted 1:2, 1:4, 1:8, 1:10, 1:16, and 1:20 with Multi-Diluent 1 and assayed for recovery and parallelism. The recoveries ranged from 84 to 106% with a mean of 96%.

Sample	*Dilution*	*Observed (ng/mL)*	*Expected (ng/mL)*	*Recovery %*
1	—	379.3		
	1:2	190.5	189.6	100
	1:4	93.0	94.8	98
	1:8	44.9	47.4	95
	1:10	36.3	37.9	96
	1:16	21.2	23.7	89
	1:20	17.1	19.0	90
	Mean			95
2	—	303.8		
	1:2	157.3	151.9	104
	1:4	74.5	76.0	98
	1:8	35.5	38.0	93
	1:10	27.4	30.4	90
	1:16	17.8	19.0	94
	1:20	13.2	15.2	87
	Mean			94

Sample	Dilution	Observed (ng/mL)	Expected (ng/mL)	Recovery %
3	—	273.5		
	1:2	145.3	136.7	106
	1:4	67.7	68.4	99
	1:8	34.2	34.2	100
	1:10	26.5	27.3	97
	1:16	15.1	17.1	88
	1:20	12.4	13.7	91
	Mean			97
4	—	272.6		
	1:2	137.4	136.3	101
	1:4	67.8	68.2	100
	1:8	32.9	34.1	96
	1:10	25.8	27.3	95
	1:16	15.7	17.0	92
	1:20	11.5	13.6	84
	Mean			95
5	—	245.1		
	1:2	125.8	122.6	103
	1:4	62.0	61.3	101
	1:8	30.8	30.6	100
	1:10	23.6	24.5	96
	1:16	14.4	15.3	94
	1:20	11.0	12.3	90
	Mean			97
Mean				**96**

Spiking Recovery

Varying amounts of HER-2/*neu* were added to 6 samples with endogenous levels of HER-2/*neu* ranging from 4.7 to 9.0 ng/mL. The amount of HER-2/*neu* that was added varied from 21.9 to 262.5 ng/mL. When compared to the expected value, the measured (recovered) values of HER-2/*neu* averaged 95.3% with a range of 88.7 to 100.9%.

Sample	Amount Added (ng/mL)	Observed (ng/mL)	Expected (ng/mL)	Recovery %
1	—	8.2		
	262.5	246.5	270.7	91.1
	175.0	176.4	183.2	96.3
	87.5	90.1	95.7	94.1
	43.8	50.1	52.0	96.3
	21.9	29.2	30.1	97.0
	Mean			95.0
2	—	4.7		
	262.5	254.6	267.2	95.3
	175.0	171.2	179.7	95.3
	87.5	90.8	92.2	98.5
	43.8	43.0	48.5	88.7
	21.9	26.3	26.6	98.9
	Mean			95.3

293

Sample	Amount Added (ng/mL)	Observed (ng/mL)	Expected (ng/mL)	Recovery %
3	—	9.0		
	262.5	261.7	271.5	96.4
	175.0	175.1	184.0	95.2
	87.5	90.3	96.5	93.6
	43.8	53.3	52.8	100.9
	21.9	29.7	30.9	96.1
	Mean			96.4
4	—	6.9		
	262.5	261.4	269.4	97.0
	175.0	171.4	181.9	94.2
	87.5	88.4	94.4	93.6
	43.8	49.4	50.7	97.4
	21.9	28.0	28.8	97.2
	Mean			95.9
5	—	6.9		
	262.5	245.7	269.4	91.2
	175.0	172.1	181.9	94.6
	87.5	86.6	94.4	91.7
	43.8	46.9	50.7	92.5
	21.9	26.7	28.8	92.7
	Mean			92.5
6	—	7.2		
	262.5	248.7	269.7	92.2
	175.0	181.7	182.2	99.7
	87.5	92.2	94.7	97.4
	43.8	48.5	51.0	95.1
	21.9	28.4	29.1	97.6
	Mean			96.4
Mean				**95.3**

Precision

Six samples were assayed 4 times, in 1 run per day, on 1 system, over a period of 10 days (n = 40 for each sample). The total % CV had a range of 3.2 to 5.7%. The within-run CV was under 5.6% for all samples. The following table is a summary of the results.

Sample	Mean (ng/mL)	Within-run SD	Within-run % CV	Total SD	Total % CV
1–Low Calibrator	10.9	0.61	5.6	0.62	5.7
2–Pooled human serum 1	15.4	0.55	3.6	0.71	4.6
3–Control 1	16.7	0.58	3.5	0.75	4.5
4–Control 2	112.9	3.66	3.2	4.99	4.4
5–High Calibrator	113.4	3.67	3.2	3.67	3.2
6–Pooled human serum 2	141.1	4.21	3.0	6.85	4.9

Standardization

The ADVIA Centaur HER-2/*neu* assay is traceable to an internal standard manufactured using highly purified material. Assigned values for calibrators and ranges of HER-2/*neu* controls are traceable to this standardization. Currently, there is no reference standard for this assay.

Evaluating Results

The following is recommended when poor reproducibility is observed for serum HER-2/*neu* values at low levels or if assay performance is unsatisfactory:

- Ensure that the assay reagent and calibrator lot numbers and expiration dates match those entered in the system.
- Ensure that the calibrators, quality control materials, and assay reagents were prepared according to the recommended procedures.
- Ensure adequate mixing of the primary reagent packs.
- Ensure that the recommended sample collection and handling procedures were followed.
- Ensure that the recommended system cleaning procedures were followed.
- Ensure that Type II reagent water was used when operating the system.[23]
- Visually check the probe and tubing for obstructions, leaks, and deformities such as pinched or crimped tubing.
- Take further corrective action following established laboratory procedures.
- Calibrate the system using new assay reagents, calibrators, and quality control samples.
- Contact Siemens Healthcare Diagnostics for technical assistance.

Technical Assistance

For customer support, please contact your local technical support provider or distributor.

www.siemens.com/diagnostics

References

1. Hayes DF, et al. Elevated circulating c-*neu* oncogene product in patients with breast cancer. Abstract presented at the 12th Annual San Antonio Breast Cancer Symposium (December 8-9. 1989).
2. Carney WP, et al. Detection and quantitation of the human *neu* oncoprotein. J Tumor Marker Oncol 1991; 6:53-72.
3. Zabrecky JR, et al. The extracellular domain of p185/*neu* is released from the surface of human breast carcinoma cells, SK-BR-3. J Biol Chem 1991; 266:1716-1720.
4. Kath R, et al. The *neu*-oncogene product in serum and tissue of patients with breast carcinoma. Ann Oncol 1993; 4:585-590.
5. Isola JJ, et al. Elevated *erb*B-2 oncoprotein levels in preoperative and follow-up serum samples define an aggressive disease course in patients with breast cancer. Cancer 1994; 73:652-658.
6. Kandl H, et al. Soluble c-*erb*B-2 fragment in serum correlates with disease stage and predicts for shortened survival in patients with early-stage and advanced breast cancer. Brit J Cancer 1994; 70:739-742.
7. Leitzel K, et al. Elevated soluble c-*erb*B-2 antigen levels in serum and effusions of a proportion of breast cancer patients. J Clin Oncol 1992; 10:1436-1443.
8. Brandt-Rauf PW, et al. The c-*erb*B-2 protein in oncogenesis: Molecular structure to molecular epidemiology. Crit Rev Oncol 1994; 5:313-329.
9. Watanabe N, et al. Serum c-*erb*B-2 in breast cancer patients. Acta Oncol 1994; 33:901-904.
10. Muss HB, et al. c-*erb*B-2 expression and response to adjuvant therapy in women with node-positive early breast cancer. N Eng J Med 1994; 330:1260-1266.
11. Anderson TI, et al. Detection of c-*erb*B-2 related protein in sera from breast cancer patients. Relationship to ERBB2 gene amplification and c-*erb*B-2 protein overexpression in tumour. Acta Oncol 1995; 34:499-504.
12. Molina R, et al. Utility of c-*erb*B-2 in tissue and in serum in the early diagnosis of recurrence in breast cancer patients: Comparison with carcinoembryonic antigen and CA 15.3. Br J Cancer 1996; 74:1126-1131.
13. Brandt-Rauf PW, et al. Detection of increased amounts of the extracellular domain of the c-*erb*B-2 oncoprotein in serum during pulmonary carcinogenesis in humans. Int J Cancer 1994; 56:383-386.
14. Vogel W, et al. The *neu* oncogene product in serum and tissue of patients with metastatic gastrointestinal carcinomas. J Cancer Res Clin Oncol 1996; 122:118-121.

15. Okada N, et al. Elevated serum c-*erb*B-2 protein levels in patients with pancreatic cancer: Correlation to metastasis and shorter survival. Oncol 1995; 52:392-396.
16. Meden H, et al. Overexpression of the oncogene c-*erb*B-2 (HER-2/*neu*) in ovarian cancer: a new prognostic factor. Euro J Obst, Gyn and Repro Biol 1997; 71:173-179.
17. Luo JC, et al. Serum c-*erb*B-2 oncopeptide in hepatocellular carcinogenesis. Med Sci Res 1993; 21:305-307.
18. Myers RB, et al. Serum levels of *erb*B-2 protein in patients with prostatic adenocarcinoma. Proceedings AACR 1995; 36:645.
19. Wu JT, et al. Detection of the extracellular domain of c-*erb*B-2 oncoprotein in sera from patients with various carcinomas: Correlation with tumor markers. J Clin Lab Anal 1993; 7:31-40.
20. Chariyalertsak S, et al. Comparison of c-*erb*B-2 oncoprotein expression in tissue and serum of patients with stomach cancer. Tumor Biol 1994; 15:294-303.
21. Fajac A, et al. c-*erb*B-2 gene amplification and protein expression in ovarian epithelial tumors: Evaluation of their respective prognostic significance by multivariate analysis. Int J Cancer 1995; 64:146-151.
22. Nakano T, et al. Correlation of cervical carcinoma c-*erb*B-2 oncogene with cell proliferation parameters in patients treated with radiation therapy for cervical carcinoma. Cancer 1997; 79:513-520.
23. Reagent Water Technical Bulletin. Siemens Healthcare Diagnostics, 107060.
24. National Committee for Clinical Laboratory Standards. Procedures for Handling and Processing of Blood Specimens; approved guideline. NCCLS Document H18-A2. Wayne, PA: NCCLS; 1999 Oct. 40p.
25. Boscato LM, Stuart MC. Heterophilic antibodies: a problem for all immunoassays. Clin Chem 1988; 34:27-33.
26. Inloes R, Clark D, Drobnies A. Interference of fluorescein, used in retinal angiography with certain clinical laboratory tests. Clin Chem 1987; 33:2126-2127.
27. Meden H, Mielke S, Schauer A, Kuhn W. Serum levels of the c-*erb*B-2 (HER-2/*neu*) encoded oncoprotein fragment p105 in normal pregnancies. In Vivo 1997; 11(1):51-4.
28. National Committee for Clinical Laboratory Standards. How to define, determine, and utilize reference intervals in the clinical laboratory; approved guideline. NCCLS Document C28-A. Wayne, PA: NCCLS; 1995 June 59p.
29. National Committee for Clinical Laboratory Standards. Interference testing in clinical chemistry. Proposed Guideline. NCCLS Document EP7-P. Wayne, PA: NCCLS; 1986.

ADVIA Centaur and ReadyPack are trademarks of Siemens Healthcare Diagnostics.

Bayer Immuno 1 is a trademark of Siemens Healthcare Diagnostics.

© 2008 Siemens Healthcare Diagnostics Inc. All rights reserved.

US Pats 4,745,181; 5,401,638; 5,609,822; 5,788,928

Origin: US

Siemens Healthcare Diagnostics Inc.
Tarrytown, NY 10591-5097 USA

EC REP Siemens Healthcare Diagnostics Ltd.
Sir William Siemens Sq.
Frimley, Camberley, UK GU16 8QD

Siemens Healthcare
Diagnostics Pty Ltd
885 Mountain Highway
Bayswater Victoria 3153
Australia

シーメンスヘルスケア・
ダイアグノスティクス株式会社
東京都品川区東五反田 3－20－14
Siemens Healthcare Diagnostics
輸入

SIEMENS

ADVIA Centaur®
ADVIA Centaur® XP
Immunoassay Systems

Intact PTH (iPTH)

Assay Summary

Sample Type	**EDTA Plasma, Serum**
Sample Volume	**200 µL**
Calibrator	**iPTH**
Sensitivity and Assay Range	**2.5–1900 pg/mL (0.265–201 pmol/L)**

Contents

REF	Contents	Number of Tests
10492369	5 ReadyPack® primary reagent packs containing ADVIA Centaur® iPTH Lite Reagent and Solid Phase ADVIA Centaur and ADVIA Centaur CP iPTH Master Curve card	500
or		
10492368	1 ReadyPack primary reagent pack containing ADVIA Centaur iPTH Lite Reagent and Solid Phase ADVIA Centaur and ADVIA Centaur CP iPTH Master Curve card	100

Intended Use

For *in vitro* diagnostic use in the quantitative determination of intact parathyroid hormone (PTH) in EDTA plasma or serum using the ADVIA Centaur® and ADVIA Centaur XP systems. This assay is intended to be used to aid in the differential diagnosis of hyperparathyroidism, hypoparathyroidism, or hypercalcemia of malignancy.

Materials Required but Not Provided

REF	Description	Contents
10492387	iPTH Calibrator	6 vials of low calibrator CAL L 6 vials of high calibrator CAL H
or		
10492394	iPTH Calibrator	2 vials of low calibrator CAL L 2 vials of high calibrator CAL H

Optional Reagents

REF	Description	Contents
05699280 (117228)	ADVIA Centaur Multi-Diluent 11 M-DIL 11	2 ReadyPack ancillary reagent packs containing 5 mL/pack
03479704 (111088)	Multi-Diluent 11 M-DIL 11	10 mL/vial
10492378	iPTH 1, 2, 3 quality control material	2 x 1 mL CONTROL 1 2 x 1 mL CONTROL 2 2 x 1 mL CONTROL 3
10492373	iPTH Master Curve Material	7 x 1 mL

Summary and Explanation of the Test

Parathyroid hormone (PTH), produced by the parathyroid gland, is the major circulating factor regulating extracellular calcium concentration. Abnormally low-ionized calcium concentrations trigger the secretion of PTH. The PTH molecules bind to type 1 parathyroid hormone receptors in target tissues and initiate a sequence of reactions resulting in increased extracellular calcium concentrations. PTH stimulates osteoclastic bone resorption resulting in the release of calcium from bone. PTH stimulates transcellular calcium reabsorption from the renal tubules and stimulates the kidney to produce 1,25-dihydroxyvitamin D which acts on the intestines to increase calcium reabsorption.[1,2,3] In most clinical conditions, rising levels of extracellular calcium suppresses PTH secretion through a negative feedback mechanism.[4]

Parathyroid hormone increases the rate of bone metabolism. Depending on the age of the patient, the bones involved, and the concentrations of the hormone in circulation over time, the effect on the bone can be either catabolic or anabolic. Consistently high concentrations of parathyroid hormone generally have a catabolic effect and intermittent, slightly elevated concentrations have an anabolic effect.[2]

The intact PTH peptide (MW~9425) consists of 84 amino acids that are sequenced and designated according to reactivity. The N-terminal or amino-terminal 1-34 region of the intact PTH molecule is biologically active. This region of the molecule contains the amino acid sequence that enables PTH to bind to the parathyroid hormone receptors in target tissues and regulate extracellular calcium concentrations. The middle and carboxy-terminal 35-84 region of the intact PTH molecule is biologically inert but possesses immunological reactivity.[5,6]

The intact PTH molecule undergoes intra- and extra-glandular proteolytic modifications that produce PTH fragments. Circulating PTH is heterogeneous, existing as both the intact PTH and PTH fragments. The PTH peptides have different rates of clearance from the circulation. Intact PTH is cleared by the kidney and liver, and it has a half-life that is less than 4 minutes. The Kupffer cells in the liver are responsible for cleaving the intact molecule into fragments and releasing them into the circulation. Very little, if any, of the amino-terminal PTH fragments are detected in circulation. The middle and carboxy-terminal PTH fragments vary in size, have longer half-lives, and are primarily cleared in the kidney by glomerular filtration. Under normal conditions, there is a greater relative concentration of circulating middle and carboxy-terminal PTH fragments. In renal insufficiency where glomerular filtration is impaired, the concentration of middle and carboxy-terminal PTH fragments is increased. The ratio of the circulating concentrations of intact PTH to middle and carboxy-terminal PTH can vary between individuals, particularly in patients with chronic renal failure.[1,2,5,6]

Quantification of circulating intact PTH assists in the differential diagnosis of hypercalcemia and hypocalcemia. In conjunction with the measurement of ionized calcium, intact PTH evaluations can be used to distinguish between patients with hyperparathyroidism, hypoparathyroidism, or hypercalcemia of malignancy. The diagnosis of primary hyperparathyroidism, a common cause of hypercalcemia, is confirmed by elevated, ionized calcium concentrations and elevated parathyroid hormone concentrations. Intact PTH levels are also used to assess and manage other metabolic bone disorders, including osteoporosis and renal osteodystrophy.[1,2,7,8] The measurement of intact PTH using two-site immunoassays provides a more accurate assessment of parathyroid tissue secretory status, especially in patients with renal impairment.[9]

The clinical utility of parathyroid hormone as a therapeutic agent has been recently investigated. Studies have shown that when slightly elevated concentrations of PTH are administered, the resulting anabolic effect on bones can protect the aging skeleton, promote fracture healing, and restore bone loss in immobilized patients. N-terminal PTH preparations are also being investigated in the treatment and prevention of osteoporosis. These preparations appear to increase bone mass and bone formation without inducing hypercalcemia.[10,11,12]

Assay Principle

The ADVIA Centaur iPTH assay is a two-site sandwich immunoassay using direct chemiluminometric technology, which uses constant amounts of an antihuman PTH antibody in the Lite Reagent and an antihuman PTH antibody in the Solid Phase Reagent. The first antibody is a polyclonal goat antihuman PTH (N-terminal 1–34) antibody labeled with acridinium ester. The second antibody is a biotinylated polyclonal goat antihuman PTH (39–84 region) antibody. Streptavidin in the Solid Phase is covalently coupled to paramagnetic latex particles.

The system automatically performs the following actions:

- Dispenses 200 µL of sample into a cuvette.
- Dispenses 50 µL of Lite Reagent and incubates for 5.0 minutes at 37°C.
- Dispenses 200 µL of Solid Phase and incubates for 2.5 minutes at 37°C.
- Separates, aspirates, and washes the cuvettes with reagent water.[13]
- Dispenses 300 µL each of Acid Reagent and Base Reagent to initiate the chemiluminescent reaction.
- Reports results according to the selected option, as described in the system operating instructions or in the online help system.

A direct relationship exists between the amount of PTH present in the patient sample and the amount of relative light units (RLUs) detected by the system.

Specimen Collection and Handling

EDTA plasma or serum is the recommended sample type for this assay.

The following recommendations for handling and storing blood samples are furnished by the Clinical and Laboratory Standards Institute (CLSI, formerly NCCLS):[14]

- Collect all blood samples observing universal precautions for venipuncture.
- Centrifuge samples at ≥ 1000 x g for 15 to 20 minutes.
- Keep tubes stoppered and upright at all times.
- Freeze samples only once and mix thoroughly after thawing.

299

Before placing samples on the system, ensure that samples have the following characteristics:

- Samples are free of fibrin or other particulate matter.
- Samples are free of bubbles.

Correct handling of patient samples is critical to ensure the integrity of the intact PTH molecule. Intact PTH has been demonstrated to be labile and is susceptible to fragmentation. This instability depends on both time and temperature. Patient sample stability is outlined in the following table:

Temperature	EDTA Plasma Stability	Serum Stability
Room Temperature	8 hours	4 hours
4°C	72 hours	48 hours
-70°C	8 months	Not tested

Reagents

Store the reagents upright at 2–8°C.

Mix all primary reagent packs by hand before loading them onto the system. Visually inspect the bottom of the reagent pack to ensure that all particles are dispersed and resuspended. For detailed information about preparing the reagents for use, see the system operator's guide.

Reagent Pack	Reagent	Volume	Ingredients	Storage	Stability
ADVIA Centaur iPTH ReadyPack primary reagent pack	Lite Reagent	5.0 mL/ reagent pack	acridinium ester-labeled polyclonal goat antihuman PTH (1-34 N-terminal) antibody (~1 µg/mL) in phosphate buffered saline with goat IgG, bovine gamma globulin, bovine serum albumin, and preservatives	2–8°C	Until the expiration date on the pack label. For onboard stability, refer to *Onboard Stability and Calibration Interval.*
	Solid Phase	20.0 mL/ reagent pack	biotinylated polyclonal goat anti-human PTH (39-84 region) antibody (~3 µg/mL) and streptavidin (~0.4 mg/mL) covalently coupled to paramagnetic latex particles in phosphate buffered saline with goat IgG, bovine gamma globulin, bovine serum albumin, and preservatives	2–8°C	Until the expiration date on the pack label. For onboard stability, refer to *Onboard Stability and Calibration Interval.*
ADVIA Centaur M-DIL 11 ReadyPack ancillary reagent pack	Multi-Diluent 11	5.0 mL/ reagent pack	tris buffer with goat serum with protein stabilizers and preservatives	2–8°C	Until the expiration date on the pack label or 28 consecutive days after accessing the ancillary reagent pack.

Safety data sheets (MSDS/SDS) available on www.siemens.com/diagnostics.

CAUTION: This device contains material of animal origin and should be handled as a potential carrier and transmitter of disease.

Dispose of hazardous or biologically contaminated materials according to the practices of your institution. Discard all materials in a safe and acceptable manner, and in compliance with all federal, state, and local requirements.

For *in vitro* diagnostic use.

300

Loading Reagents

Ensure that the system has sufficient primary and ancillary reagent packs. For detailed information about preparing the system, refer to the system operating instructions or to the online help system.

Mix all primary reagent packs by hand before loading them onto the system. Visually inspect the bottom of the reagent pack to ensure that all particles are dispersed and resuspended. For detailed information about preparing the reagents for use, see the system operator's guide.

Load the ReadyPack reagent packs in the primary reagent area using the arrows as a placement guide. The system automatically mixes the primary reagent packs to maintain homogeneous suspension of the reagents. For detailed information about loading reagents, refer to the system operating instructions or to the online help system.

If automatic dilution of a sample is required, load ADVIA Centaur Multi-Diluent 11 in the ancillary reagent entry.

Onboard Stability and Calibration Interval

Onboard Stability	Calibration Interval
28 days	14 days

Additionally, the ADVIA Centaur Intact PTH assay requires a two-point calibration:

- when changing lot numbers of primary reagent packs
- when replacing system components
- when quality control results are repeatedly out of range

NOTE:

- Discard the primary reagent packs at the end of the onboard stability interval.
- Do not use reagents beyond the expiration date.

Master Curve Calibration

The ADVIA Centaur Intact PTH assay requires a Master Curve calibration when using a new lot number of Lite Reagent and Solid Phase. For each new lot number of Lite Reagent and Solid Phase, use the bar-code reader or keyboard to enter the Master Curve values on the system. The Master Curve card contains the Master Curve values. For detailed information about entering calibration values, refer to the system operating instructions or to the online help system.

Quality Control

Follow government regulations or accreditation requirements for quality control frequency.

For detailed information about entering quality control values, refer to the system operating instructions or to the online help system.

To monitor system performance and chart trends, as a minimum requirement, two levels of quality control material should be assayed on each day that samples are analyzed. Quality control samples should also be assayed when performing a two-point calibration. Treat all quality control samples the same as patient samples.

301

Siemens Healthcare Diagnostics recommends the use of iPTH quality control material or equivalent commercially available control materials with at least 2 levels (low and high). A satisfactory level of performance is achieved when the analyte values obtained are within the Acceptable Control range for the system or within your range, as determined by an appropriate internal laboratory quality control scheme.

Taking Corrective Action

If the quality control results do not fall within the Expected Values or within the laboratory's established values, do not report results. Take the following actions:

1. Investigate and determine the cause of the unacceptable control results:
   - Verify that the materials are not expired.
   - Verify that required maintenance was performed.
   - Verify that the assay was performed according to the instructions for use.
   - Rerun the assay with fresh quality control samples.
   - If necessary, contact your local technical support provider or distributor for assistance.
2. When the condition is corrected, retest the controls, and confirm that results are within acceptable limits.
3. Repeat testing of patient samples before reporting results.

Perform corrective actions in accordance with your established laboratory protocol.

Sample Volume

This assay requires 200 µL of sample for a single determination. This volume does not include the unusable volume in the sample container or the additional volume required when performing duplicates or other tests on the same sample. For detailed information about determining the minimum-required volume, refer to *Sample Volume Requirements* in the *ADVIA Centaur Reference Manual.*

NOTE: The sample volume required to perform onboard dilution differs from the sample volume required to perform a single determination. Refer to the following information for the sample volume required to perform onboard dilutions:

Dilution	Sample Volume (µL)
1:5	40

Assay Procedure

For detailed instructions on performing the procedure, refer to the system operating instructions or to the online help system.

Procedural Notes

Calculations

For detailed information about how the system calculates results, refer to the system operating instructions or to the online help system.

The system reports intact PTH results in pg/mL (common units) or pmol/L (SI units), depending on the units defined when setting up the assay. The conversion formula is 1 pg/mL = 0.106 pmol/L.

302

Dilutions

The following information pertains to dilutions:

- Patient samples with intact PTH levels greater than 1900 pg/mL must be diluted and retested to obtain accurate results.
- Patient samples can be automatically diluted by the system or prepared manually.
- For automatic dilutions, ensure that ADVIA Centaur Multi-Diluent 11 is loaded and set the system parameters as follows:

  Dilution point: ≤ 1900 pg/mL

  Dilution factor: 5

  For detailed information about automatic dilutions, refer to the system operating instructions or to the online help system.
- Manually dilute the patient samples when patient results exceed the linearity of the assay using automatic dilution, or when laboratory protocol requires manual dilution.
- Use Multi-Diluent 11 to manually dilute patient samples, and then load the diluted sample in the sample rack, replacing the undiluted sample.
- Ensure that results are mathematically corrected for dilution. If a dilution factor is entered when scheduling the test, the system automatically calculates the result.

High-Dose Hook Effect

Patient samples with high intact PTH levels can cause a paradoxical decrease in the RLUs (high-dose hook effect). In this assay, patient samples with intact PTH levels as high as 100,000 pg/mL (10,600 pmol/L) do not demonstrate a paradoxical decrease in the RLUs (high-dose hook effect).

Limitations

Results should always be interpreted in conjunction with the patient's medical history, clinical presentation, and other findings.

Interpretation of intact PTH values should always take into account serum calcium results and the interrelationship between these two elements in various disorders involving PTH and calcium. It is recommended that the intact PTH results should always be interpreted with caution and with consideration of the overall clinical manifestations even when used in conjunction with calcium values.

It should be noted that some overlap of intact PTH values does exist from patients with various parathyroid disorders.

Measurement of intact PTH is useful in differentiating between hypercalcemia due to hyperparathyroidism and hypercalcemia of malignancy. However, the assay is not intended as, and should not be relied upon as, a diagnostic indicator of malignancy.

It is also extremely important to ensure that patient samples have been handled and stored correctly. Incorrect handling of samples will result in a loss of intact PTH.

The type of specimen used (serum or EDTA plasma) may influence Intact PTH measurements.[15,16] During routine monitoring of iPTH levels, to avoid bias in the results, use the same specimen type throughout the monitoring period.

303

Heterophilic antibodies in human serum can react with reagent immunoglobulins, interfering with *in vitro* immunoassays.[17] Patients routinely exposed to animals or to animal serum products can be prone to this interference and anomalous values may be observed. Additional information may be required for diagnosis.

Specimens that are . . .	Demonstrate ≤ 10% change in results up to . . .
hemolyzed	200 mg/dL of hemoglobin
lipemic	3000 mg/dL of triglycerides
icteric	40 mg/dL of bilirubin
biotin	1000 ng/mL of biotin

Expected Results

Results should always be interpreted in conjunction with the patient's medical history, clinical presentation, and other findings.

The reference range was established on the ACS:180® system. EDTA plasma samples were obtained from 142 apparently healthy individuals whose calcium levels ranged from 8.0 to 10.3 mg/dL. Ninety-five percent of the intact PTH values for these individuals fell in the range of 14 to 72 pg/mL (1.48 to 7.63 pmol/L) with an overall range of 11.1 to 79.5 pg/mL (1.18 to 8.43 pmol/L).

These results were confirmed for the ADVIA Centaur Intact PTH assay. Refer to *Method Comparison*.

As with all *in vitro* diagnostic assays, each laboratory should determine its own reference range(s) for the diagnostic evaluation of patient results.[18]

Performance Characteristics

Specificity

The cross-reactivity of the ADVIA Centaur Intact PTH assay was determined by spiking samples with the PTH fragments and compounds listed below at the indicated levels. There was no significant effect on the intact PTH measurement.

Cross-reactant	Amount Added (pg/mL)	% Cross-reactivity
PTH (1-34) fragment	300	0.74
PTH (39-68) fragment	100,000	0.005
PTH (39-84) fragment	100,000	0.024
PTH (44-68) fragment	100,000	0.007
PTH (53-84) fragment	100,000	0.003
Calcitonin	100,000	0.0004

Interference testing was determined according to CLSI Document EP7-A2.[19]

Sensitivity and Assay Range

The ADVIA Centaur Intact PTH assay measures intact PTH concentrations up to 1900 pg/mL (201 pmol/L) with a minimum detectable concentration (analytical sensitivity) of 2.5 pg/mL (0.265 pmol/L). Analytical sensitivity is defined as the concentration of intact PTH that corresponds to the RLUs that are two standard deviations greater than the mean RLUs of 20 replicate determinations of the Intact PTH zero standard.

304

Method Comparison

For 185 samples in the range of 15.0 to 1908.4 pg/mL (1.58 to 202.3 pmol/L), the relationship between the ADVIA Centaur Intact PTH assay and the ACS:180 Intact PTH assay is described by the equation:

ADVIA Centaur Intact PTH = 0.95 (ACS:180 Intact PTH) + 6.48 pg/mL

Correlation coefficient (r) = 0.99

Dilution Recovery

Five human plasma samples in the range of 1040.2 to 1824.1 pg/mL (110.3 to 193.4 pmol/L) of intact PTH were diluted 1:2, 1:4, and 1:8 with Multi-Diluent 11 and assayed for recovery and parallelism. The recoveries ranged from 91.3 to 116.3% with a mean of 99.8%.

Sample	Dilution	Observed (pg/mL)	Expected (pg/mL)	Observed (pmol/L)	Expected (pmol/L)	Recovery %
1	—	1573.9		166.8		
	1:2	718.2	787.0	76.1	83.4	91.3
	1:4	363.1	393.5	38.5	41.7	92.3
	1:8	192.7	196.7	20.4	20.9	98.0
	Mean					93.9
2	—	1578.8		167.4		
	1:2	743.5	789.4	78.8	83.7	94.2
	1:4	362.0	394.7	38.4	41.9	91.7
	1:8	186.8	197.4	19.8	20.9	94.6
	Mean					93.5
3	—	1155.7		122.5		
	1:2	604.2	577.9	64.1	61.3	104.6
	1:4	314.0	288.9	33.3	30.6	108.7
	1:8	168.1	144.5	17.8	15.3	116.3
	Mean					109.9
4	—	1824.1		193.4		
	1:2	880.1	912.1	93.3	96.7	96.5
	1:4	438.5	456.0	46.5	48.3	96.2
	1:8	219.8	228.0	23.3	24.2	96.4
	Mean					96.4
5	—	1040.2		110.3		
	1:2	525.2	520.1	55.7	55.1	101.0
	1:4	270.4	260.1	28.7	27.6	104.0
	1:8	145.1	130.0	15.4	13.8	111.6
	Mean					105.5
Mean						**99.8**

305

Spiking Recovery

Varying amounts of intact PTH were added to 5 samples with endogenous intact PTH levels of 37.8 to 178.7 pg/mL (4.0 to 19.0 pmol/L). The recoveries ranged from 91.0 to 123.6% with a mean of 105.0%.

Sample	Amount Added (pg/mL)	Observed (pg/mL)	Amount Added (pmol/L)	Observed (pmol/L)	Recovery %
1	—	148.0	—	15.7	
	24	156.6	2.5	16.6	91.0
	50	192.7	5.3	20.4	97.3
	123	278.8	13.0	29.6	102.9
	292	470.9	31.0	49.9	107.0
	796	1031.2	84.4	109.4	109.2
	Mean				101.5
2	—	178.7	—	19.0	
	24	195.2	2.5	20.7	96.3
	50	218.3	5.3	23.1	95.4
	123	318.7	13.0	33.8	105.6
	292	531.1	31.0	56.3	112.8
	796	1142.2	84.4	121.1	117.2
	Mean				105.5
3	—	106.2	—	11.3	
	24	129.9	2.5	13.8	99.8
	50	162.5	5.3	17.2	104.0
	123	245.7	13.0	26.1	107.2
	292	492.3	31.0	52.2	123.6
	796	1053.4	84.4	111.7	116.8
	Mean				110.3
4	—	77.5	—	8.2	
	24	98.1	2.5	10.4	96.7
	50	121.2	5.3	12.9	95.1
	123	191.7	13.0	20.3	95.6
	292	397.6	31.0	42.2	107.6
	796	955.5	84.4	101.3	109.4
	Mean				100.9
5	—	37.8	—	4.0	
	24	60.0	2.5	6.4	97.1
	50	83.0	5.3	8.8	94.5
	123	173.7	13.0	18.4	108.0
	292	398.0	31.0	42.2	120.7
	796	951.9	84.4	100.9	114.2
	Mean				106.9
Mean					**105.0**

306

Precision

Three samples were assayed 12 times, in each of 12 runs, on 3 systems, (n = 144 for each sample), over a period of 4 days. The following results were obtained:

Mean (pg/mL)	Mean (pmol/L)	Within-Run % CV	Run-to-Run % CV	Total % CV
40.4	4.3	5.2	5.8	7.8
223.8	23.7	3.4	1.5	7.0
859.3	91.1	3.5	2.8	4.6

Standardization

The ADVIA Centaur Intact PTH assay standardization is maintained with internal standards manufactured using purified human PTH (1–84). The ADVIA Centaur Intact PTH assay is traceable to World Health Organization (WHO) standard preparation 79/500. The average recovery of WHO material is 73% over the full range of the assay. Assigned values for calibrators are traceable to this standardization.

Technical Assistance

For customer support, contact your local technical support provider or distributor.

www.siemens.com/diagnostics

References

1. Mundy GR, Guise TA. Hormonal control of calcium homeostasis. *Clin Chem* 1999;45:1347–1352.
2. Marx SJ. Hyperparathyroid and hypoparathyroid disorders. *New England Journal of Medicine* 2000;343:1863–1875.
3. Friedman PA. Mechanisms of renal calcium transport. *Exp Nephrol* 2000; 8(6):343–350.
4. Akizawa T, Fukagawa M. Modulation of parathyroid cell function by calcium ion in health and uremia. *Am J Med Sci* 1999;317(6):358–362.
5. Itani O, Tsang RC. Bone disease. In: Kaplan LA, Pesce AJ, Clinical chemistry: theory, analysis, and correlation, 3rd ed. St. Louis: CV Mosby, 1996:534–536.
6. Endres DB, Rude RK. Mineral and bone metabolism. In: Burtis CA, Ashwood, ER, Tietz textbook of clinical chemistry, 2nd ed. Philadelphia:WB Saunders, 1994:1914–1922.
7. Casez JP, Pfammatter R, et al. Diagnostic approach to hypercalcemia: relevance of parathyroid hormone and parathyroid hormone-related protein measurements. *Euro Jour of Int Med* 2001;12(4):344–349.
8. Johnson LR, Doherty G, et al. Evaluation of the performance and clinical impact of a rapid intraoperative parathyroid hormone assay in conjunction with preoperative imaging and concise parathyroidectomy. *Clin Chem* 2001;47:919–925.
9. Lepage R, Roy L, Brossard JH, et al. A non-(1–84) circulating parathyroid hormone (PTH) fragment interferes significantly with intact PTH commercial assay measurements in uremic samples. *Clin Chem* 1998;44:805–809.
10. Bilezikian JP, Silverberg SJ. Parathyroid hormone. Does it have a role in the pathogenesis of osteoporosis? *Clin Lab Med* 2000, 20(3):559–567.
11. Raisz LG. Physiology and pathophysiology of bone remodeling. *Clin Chem* 1999,45:1353–1358.
12. Morley P, Whitfield JF, Willick GE. Parathyroid hormone: an anabolic treatment for osteoporosis. *Current Pharmaceutical Design* 2001, 7(8):671–687.
13. Reagent Water Technical Bulletin. Siemens Healthcare Diagnostics, 107060.
14. Clinical and Laboratory Standards Institute (formerly NCCLS). *Procedures for the Handling and Processing of Blood Specimens; Approved Guideline - Third Edition.* Wayne, PA: Clinical and Laboratory Standards Institute; 2004. NCCLS Document H18-A3.
15. Glendenning P, Laffer LLA, Weber HK, Musk AA, Vasikaran SD. Parathyroid Hormone is More Stable in EDTA Plasma Than in Serum. *Clin Chem* 2002;48:766–767.
16. Teal TK, Wood JL, Stevens PE, Lamb EJ. Stability of Bio-Intact (1-84) Parathyroid Hormone ex Vivo in Serum and EDTA Plasma from Hemodialysis Patients. *Clin Chem* 2004;50:1713–1714.

307

17. Boscato LM, Stuart MC. Heterophilic antibodies: a problem for all immunoassays. *Clin Chem* 1988;34:27–33.
18. Clinical and Laboratory Standards Institute (formerly NCCLS). *How to Define and Determine Reference Intervals in the Clinical Laboratory; Approved Guideline - Second Edition.* Wayne, PA: Clinical and Laboratory Standards Institute; 2000. NCCLS Document C28-A2.
19. Clinical and Laboratory Standards Institute (formerly NCCLS). *Interference Testing in Clinical Chemistry; Approved Guideline - Second Edition.* Wayne, PA: Clinical and Laboratory Standards Institute; 2005. NCCLS document EP7-A2.

ADVIA Centaur, ReadyPack, and ACS:180 are trademarks of Siemens Healthcare Diagnostics.
© 2010 Siemens Healthcare Diagnostics. All rights reserved.
US Pats 5,656,426; 5,609,822; 5,788,928

Origin: US

Siemens Healthcare Diagnostics Inc.
Tarrytown, NY 10591-5097 USA

EC REP Siemens Healthcare Diagnostics Ltd.
Sir William Siemens Sq.
Frimley, Camberley, UK GU16 8QD

Siemens Healthcare
Diagnostics Pty Ltd
885 Mountain Highway
Bayswater Victoria 3153
Australia

シーメンスヘルスケア・
ダイアグノスティクス株式会社
東京都品川区東五反田 3－20－14
Siemens Healthcare Diagnostics
輸入

308

Understanding the Symbols

The following symbols may appear on the product labeling:

Symbol	Definition	Symbol	Definition
IVD	*In vitro* diagnostic medical device	REF	Catalog number
	Manufacturer	EC REP	Authorized Representative in the European Community
CE	CE Mark	CE 0088	CE Mark with identification number of notified body
	Consult instructions for use		Caution! Potential Biohazard
0°C	Do not freeze (> 0°C)	2°C 8°C	Temperature limitation (2–8°C)
2°C	Lower limit of temperature (≥ 2°C)	-10°C	Upper limit of temperature (≤ -10°C)
	Keep away from sunlight		Use by
UP	Store upright		Shake the reagent pack vigorously. Refer to *Loading Reagents* in the assay-specific ADVIA Centaur product instructions for detailed information.
LOT	Batch code	Σ XX	Contains sufficient for (n) tests
2010-01	Date format (year-month)	PRINTED WITH SOY INK	Printed with soy ink
DER GRÜNE PUNKT	Green dot		Recycle

309

310

LH

CE

Assay Summary

Sample Type	***Serum***
Sample Volume	***50 µL***
Calibrator	***B***
Sensitivity and Assay Range	***0.07 – 200 mIU/mL (IU/L)***

Contents

REF	Contents	Number of Tests
02212941 (110754)	5 ReadyPack® primary reagent packs containing ADVIA Centaur® LH Lite Reagent and Solid Phase ADVIA Centaur LH Master Curve card	300
or		
01756298 (110753)	1 ReadyPack primary reagent pack containing ADVIA Centaur LH Lite Reagent and Solid Phase ADVIA Centaur LH Master Curve card	60

For a definition of symbols used in product labeling, please refer to *Understanding the Symbols* in Appendix D.

Intended Use

For *in vitro* diagnostic use in the quantitative determination of luteinizing hormone (LH) in serum using the ADVIA Centaur and ADVIA Centaur XP systems.

Materials Required But Not Provided

REF	Description	Contents
00652707	Calibrator B	6 vials of low calibrator CAL L 6 vials of high calibrator CAL H
or		
00649625	Calibrator B	2 vials of low calibrator CAL L 2 vials of high calibrator CAL H

Optional Reagents

REF	Description	Contents
07907174 (110313)	ADVIA Centaur Multi-Diluent 1 M-DIL 1	6 ReadyPack ancillary reagent packs containing 25 mL/pack
or		
07293184 (110312)	ADVIA Centaur Multi-Diluent 1 M-DIL 1	2 ReadyPack ancillary reagent packs containing 25 mL/pack
672177	Multi-Diluent 1 M-DIL 1	50 mL/vial
106794	LH2 Master Curve Material	10 x 1 mL

Summary and Explanation of the Test

Luteinizing hormone (LH) is a glycoprotein hormone having two subunits. The alpha subunit is similar to those of follicle-stimulating hormone (FSH), human chorionic gonadotropin (hCG), and thyroid-stimulating hormone (TSH). The beta subunit is different from those of the other glycoprotein hormones and confers its biochemical specificity.[1,2]

LH is secreted by the anterior pituitary in response to gonadotropin-releasing hormone (GnRH) secreted by the hypothalamus.[3,4] In males, LH is also called interstitial cell-stimulating hormone (ICSH).[1,2] In both males and females, LH secretion is regulated by a balance of positive and negative feedback mechanisms involving the hypothalamic-pituitary axis, the reproductive organs, and the pituitary and sex steroid hormones.[5-7] LH and the other pituitary gonadotropin, FSH, play a critical role in maintaining the normal function of the male and female reproductive systems.

The following table shows the target tissues and actions of LH in females and males.[1,3,5,6]

Category	Target Tissues	Actions
females	theca cells of the ovarian follicles	• stimulates production of androgens that FSH converts to estradiol during the follicular phase
	graafian follicle	• acts synergistically with FSH to cause ovulation during midcycle peak
	corpus luteum	• stimulates formation of the corpus luteum after ovulation
		• stimulates progesterone secretion during the luteal phase
males	Leydig cells in the interstitial tissue of the testes	• stimulates testosterone secretion

Abnormal LH levels with corresponding increased or decreased levels of FSH, estrogens, progesterone, and testosterone are associated with a number of pathological conditions.[3] Increased LH levels are associated with menopause, primary ovarian hypofunction, and polycystic ovary disease in females and primary hypogonadism in males. Decreased LH levels are associated with primary ovarian hyperfunction in females and primary hypergonadism in males.

Assay Principle

The ADVIA Centaur LH assay is a two-site sandwich immunoassay using direct chemiluminometric technology, which uses constant amounts of two antibodies that have specificity for the beta subunit of the intact LH molecule. The first antibody, in the Lite Reagent, is a monoclonal mouse anti-LH antibody labeled with acridinium ester. The second antibody, in the Solid Phase, is a monoclonal mouse anti-LH antibody, which is covalently coupled to paramagnetic particles.

The system automatically performs the following steps:

- dispenses 50 µL of sample into a cuvette
- dispenses 100 µL of Lite Reagent and incubates for 5.0 minutes at 37°C
- dispenses 400 µL of Solid Phase and incubates for 2.5 minutes at 37°C
- separates, aspirates, and washes the cuvettes with reagent water[8]
- dispenses 300 µL each of Acid Reagent and Base Reagent to initiate the chemiluminescent reaction
- reports results according to the selected option, as described in the system operating instructions or in the online help system

A direct relationship exists between the amount of LH present in the patient sample and the amount of relative light units (RLUs) detected by the system. 312

Specimen Collection and Handling

Serum is the recommended sample type for this assay.

The following recommendations for handling and storing blood samples are furnished by the National Committee for Clinical Laboratory Standards (NCCLS):[9]

- Collect all blood samples observing universal precautions for venipuncture.
- Allow samples to clot adequately before centrifugation.
- Keep tubes stoppered and upright at all times.
- Do not use samples that have been stored at room temperature for longer than 8 hours.
- Tightly cap and refrigerate specimens at 2 to 8°C if the assay is not completed within 8 hours.
- Freeze samples at or below -20°C if the sample is not assayed within 48 hours.
- Freeze samples only once and mix thoroughly after thawing.

Before placing samples on the system ensure that:

- Samples are free of fibrin or other particulate matter.
- Samples are free of bubbles.

Reagents

Store the reagents upright at 2–8°C.
Mix all primary reagent packs by hand before loading them onto the system. Visually inspect the bottom of the reagent pack to ensure that all particles are dispersed and resuspended. For detailed information about preparing the reagents for use, refer to Appendix C, *Handling Reagents*.

Reagent Pack	Reagent	Volume	Ingredients	Storage	Stability
ADVIA Centaur LH ReadyPack primary reagent pack	Lite Reagent	6.0 mL/ reagent pack	monoclonal mouse anti-LH antibody (~0.17 µg/mL) labeled with acridinium ester in buffer with sodium azide (< 0.1%) and preservatives	2–8°C	until the expiration date on the pack label. For onboard stability, refer to *Onboard Stability and Calibration Interval.*
	Solid Phase	24.0 mL/ reagent pack	monoclonal mouse anti-LH antibody (~0.05 mg/mL) covalently coupled to paramagnetic particles in buffer with sodium azide (0.1%) and preservatives	2–8°C	until the expiration date on the pack label. For onboard stability, refer to *Onboard Stability and Calibration Interval.*
ADVIA Centaur M-DIL 1 ReadyPack ancillary reagent pack	Multi-Diluent 1	25.0 mL/ reagent pack	equine serum with sodium azide (0.1%) and preservatives	2–8°C	until the expiration date on the pack label or 28 consecutive days after accessing the ancillary reagent pack

CAUTION: Sodium azide can react with copper and lead plumbing to form explosive metal azides. On disposal, flush reagents with a large volume of water to prevent the buildup of azides, if disposal in a drain is in compliance with federal, state, and local requirements.

R22
S28

Harmful! Harmful if swallowed. After contact with skin, wash immediately with plenty of soap and water. **Contains:** sodium azide; Solid Phase

CAUTION: This device contains material of animal origin and should be handled as a potential carrier and transmitter of disease.

For *In Vitro* Diagnostic Use.

313

Loading Reagents

Ensure that the system has sufficient primary and ancillary reagent packs. For detailed information about preparing the system, refer to the system operating instructions or to the online help system.

CAUTION: Mix all primary reagent packs by hand before loading them onto the system. Visually inspect the bottom of the reagent pack to ensure that all particles are dispersed and resuspended. For detailed information about preparing the reagents for use, refer to Appendix C, *Handling Reagents*.

Load the ReadyPack reagent packs in the primary reagent area using the arrows as a placement guide. The system automatically mixes the primary reagent packs to maintain homogeneous suspension of the reagents. For detailed information about loading reagents, refer to the system operating instructions or to the online help system.

If automatic dilution of a sample is required, load ADVIA Centaur Multi-Diluent 1 in the ancillary reagent entry.

Onboard Stability and Calibration Interval

Onboard Stability	Calibration Interval
28 days	28 days

Additionally, the ADVIA Centaur LH assay requires a two-point calibration:

- when changing lot numbers of primary reagent packs
- when replacing system components
- when quality control results are repeatedly out of range

CAUTION:

- Discard the primary reagent packs at the end of the onboard stability interval.
- Do not use reagents beyond the expiration date.

Master Curve Calibration

The ADVIA Centaur LH assay requires a Master Curve calibration when using a new lot number of Lite Reagent and Solid Phase. For each new lot number of Lite Reagent and Solid Phase, use the barcode reader or keyboard to enter the Master Curve values on the system. The Master Curve card contains the Master Curve values. For detailed information about entering calibration values, refer to the system operating instructions or to the online help system.

Quality Control

For detailed information about entering quality control values, refer to the system operating instructions or to the online help system.

To monitor system performance and chart trends, as a minimum requirement, two levels of quality control material should be assayed on each day that samples are analyzed. Quality control samples should also be assayed when performing a two-point calibration. Treat all quality control samples the same as patient samples.

Siemens Healthcare Diagnostics recommends the use of commercially available quality control materials with at least 2 levels (low and high). A satisfactory level of performance is achieved when the analyte values obtained are within the Acceptable Control Range for the system or within your range, as determined by an appropriate internal laboratory quality control scheme.

314

If the quality control results do not fall within the Expected Values or within the laboratory's established values, do not report results. Take the following actions:

- Verify that the materials are not expired.
- Verify that required maintenance was performed.
- Verify that the assay was performed according to the instructions for use.
- Rerun the assay with fresh quality control samples.
- If necessary, contact your local technical support provider or distributor for assistance.

Sample Volume

This assay requires 50 µL of sample for a single determination. This volume does not include the unusable volume in the sample container or the additional volume required when performing duplicates or other tests on the same sample. For detailed information about determining the minimum required volume, refer to *Sample Volume Requirements* in the *ADVIA Centaur Reference Manual.*

NOTE: The sample volume required to perform onboard dilution differs from the sample volume required to perform a single determination. Refer to the following information for the sample volume required to perform onboard dilutions:

Dilution	Sample Volume (µL)
1:2	100

Assay Procedure

For detailed procedural information, refer to the system operating instructions or to the online help system.

Procedural Notes

Calculations

For detailed information about how the system calculates results, refer to the system operating instructions or to the online help system.

The system reports serum LH results in mIU/mL (mass units) or IU/L (SI units), depending on the units defined when setting up the assay. The conversion formula is 1 mIU/mL = 1 IU/L.

Dilutions

- Serum samples with LH levels greater than 200 mIU/mL (IU/L) must be diluted and retested to obtain accurate results.
- Patient samples can be automatically diluted by the system or prepared manually.
- For automatic dilutions, ensure that ADVIA Centaur Multi-Diluent 1 is loaded and set the system parameters as follows:

  Dilution point: ≤ 200 mIU/mL (IU/L)

  Dilution factor: 2

  For detailed information about automatic dilutions, refer to the system operating instructions or to the online help system.
- Manually dilute the patient samples when patient results exceed the linearity of the assay using automatic dilution, or when laboratory protocol requires manual dilution.
- Use Multi-Diluent 1 to manually dilute patient samples, and then load the diluted sample in the sample rack, replacing the undiluted sample.
- Ensure that results are mathematically corrected for dilution. If a dilution factor is entered when scheduling the test, the system automatically calculates the result.

High Dose Hook Effect

In ADVIA Centaur LH assay, patient samples spiked to LH levels up to 18,000 mIU/mL (IU/L) do not demonstrate a paradoxical decrease in the RLUs (high dose hook effect).

Disposal

Dispose of hazardous or biologically contaminated materials according to the practices of your institution. Discard all materials in a safe and acceptable manner, and in compliance with all federal, state, and local requirements.

Limitations

Administration of gonadotropin-releasing hormone (GnRH), clomiphene citrate, and human menopausal gonadotropin (hMG) to females can result in elevated endogenous LH values, while administration of estrogens or testosterone can result in decreased endogenous LH values. Administration of hMG to males can result in elevated endogenous LH values, while administration of testosterone decreases endogenous LH values.

Heterophilic antibodies in human serum can react with reagent immunoglobulins, interfering with *in vitro* immunoassays.[10] Patients routinely exposed to animals or to animal serum products can be prone to this interference and anomalous values may be observed. Additional information may be required for diagnosis.

Serum specimens that are . . .	Have an insignificant effect on the assay up to . . .
hemolyzed	500 mg/dL of hemoglobin
lipemic	3000 mg/dL of triglycerides
icteric	20 mg/dL of bilirubin

316

Expected Results

The expected results for the ACS:180® LH2 assay were previously established. Data was obtained on serum samples from 528 apparently healthy individuals. Based on a central 95% interval, the following data was generated:

Category	N	Median (mIU/mL) (IU/L)	Range (mIU/mL) (IU/L)
Females			
Normally menstruating			
follicular phase	119	4.4	1.9–12.5
midcycle peak	53	31.3	8.7–76.3
luteal phase	105	2.8	0.5–16.9
Pregnant	49	< 0.1	< 0.1–1.5
Postmenopausal	35	29.7	15.9–54.0
Contraceptives	26	2.7	0.7–5.6
Males			
20–70 years	59	2.8	1.5–9.3
> 70 years	34	8.0	3.1–34.6
Children	48	< 0.1	< 0.1–6.0

These results were confirmed for the ADVIA Centaur LH assay by analyzing 289 samples in the range of 0.3 to 112.9 mIU/mL (IU/L). Refer to *Method Comparison*.

As with all diagnostic assays, each laboratory should determine its own reference range(s) for the diagnostic evaluation of patient results.[11]

Performance Characteristics

Specificity

The cross-reactivity of the ADVIA Centaur LH assay with TSH, β-LH, hCG, β-hCG, FSH, prolactin, and hGH was determined by adding these hormones to samples containing LH. The level of LH in the samples was then determined.

Cross-reactant	LH value without cross-reactant (mIU/mL) (IU/L)	LH value with cross-reactant (mIU/mL) (IU/L)
TSH; 1000 µIU/mL	13.3	13.1
	26.8	27.4
	46.3	47.2
β-LH; 5 ng/mL	8.4	9.6
	20.4	21.6
	39.5	41.4
	71.8	71.1
hCG; 200,000 mIU/mL	13.3	12.6
	26.8	24.5
	46.3	43.4
β-hCG; 10,000 mIU/mL	3.0	2.6
	8.6	7.4
	75.8	68.4
FSH; 200 mIU/mL	13.3	13.5
	26.8	27.4
	46.3	48.2

Cross-reactant	LH value without cross-reactant (mIU/mL) (IU/L)	LH value with cross-reactant (mIU/mL) (IU/L)
Prolactin; 400 ng/mL	13.3	12.8
	26.8	26.5
	46.3	46.4
hGH; 100 ng/mL	13.3	13.6
	26.8	27.1
	46.3	48.3

Interference testing was determined according to NCCLS Document EP7-P.[12]

Sensitivity and Assay Range

The ADVIA Centaur LH assay measures LH concentrations up to 200 mIU/mL (IU/L) with a minimum detectable concentration (analytical sensitivity) of 0.07 mIU/mL (IU/L). Analytical sensitivity is defined as the concentration of LH that corresponds to the RLUs that are two standard deviations greater than the mean RLUs of 20 replicate determinations of the LH zero standard.

Method Comparison

For 289 samples in the range of 0.3 to 112.9 mIU/mL (IU/L), the relationship between the ADVIA Centaur LH assay and the ACS:180 LH2 assay is described by the equation:

ADVIA Centaur LH = 1.01 (ACS:180 LH2) + 0.23 mIU/mL

Correlation coefficient (r) = 0.99

Dilution Recovery

Seven human serum samples in the range of 93.5 to 151.0 mIU/mL (IU/L) were diluted 1:2 and 1:4 with Multi-Diluent 1 and assayed for recovery and parallelism. The recoveries ranged from 80.3% to 100.4% with a mean of 88.3%.

Sample	Dilution	Observed (mIU/mL) (IU/L)	Expected (mIU/mL) (IU/L)	Recovery %
1	—	134.0		
	1:2	66.9	67.0	99.8
	1:4	33.6	33.5	100.4
	Mean			100.1
2	—	121.9		
	1:2	53.9	61.0	88.4
	1:4	25.5	30.5	83.8
	Mean			86.1
3	—	93.5		
	1:2	42.3	46.7	90.4
	1:4	20.5	23.4	87.7
	Mean			89.1
4	—	108.1		
	1:2	47.5	54.0	87.8
	1:4	23.4	27.0	86.8
	Mean			87.3
5	—	151.0		
	1:2	66.3	75.5	87.7
	1:4	30.3	37.8	80.3
	Mean			84.0
6	—	106.8		
	1:2	47.0	53.4	88.0
	1:4	22.9	26.7	85.6
	Mean			86.8

318

Sample	Dilution	Observed (mIU/mL) (IU/L)	Expected (mIU/mL) (IU/L)	Recovery %
7	—	149.9		
	1:2	65.1	75.0	86.9
	1:4	30.9	37.5	82.4
	Mean			84.6
Mean				**88.3**

Spiking Recovery

Varying amounts of LH were added to five samples with endogenous LH levels of 2.2 to 28.3 mIU/mL (IU/L). The recoveries ranged from 97.3% to 115.8% with a mean of 104.6%.

Sample	Amount Added (mIU/mL) (IU/L)	Observed (mIU/mL) (IU/L)	Recovery %
1	—	2.2	
	1.9	4.4	107.6
	5.2	7.6	103.4
	10.5	12.8	100.9
	50.2	51.0	97.3
	94.7	101.6	104.9
	142.3	143.7	99.5
	Mean		102.3
2	—	21.6	
	1.9	23.0	97.8
	5.2	27.5	102.7
	10.5	31.9	99.4
	50.2	74.4	103.6
	94.7	120.2	103.4
	142.3	170.4	104.0
	Mean		101.8
3	—	25.8	
	1.9	28.4	102.5
	5.2	32.8	104.3
	10.5	37.4	103.0
	50.2	83.5	109.9
	94.7	129.9	107.8
	142.3	182.3	108.5
	Mean		106.0
4	—	28.3	
	1.9	31.4	103.9
	5.2	34.7	103.7
	10.5	40.4	104.1
	50.2	82.0	104.5
	94.7	131.6	107.0
	142.3	173.3	101.6
	Mean		104.1
5	—	12.1	
	1.9	14.2	101.4
	5.2	18.0	104.2
	10.5	24.2	107.1
	50.2	70.8	113.6
	94.7	123.7	115.8
	142.3	171.2	110.9
	Mean		108.8
Mean			**104.6**

319

Precision

Six samples were assayed 6 times, in each of 12 runs, on 3 systems, (n = 72 for each sample), over a period of 2 days. The following results were obtained:

Mean (mIU/mL) (IU/L)	Within-run % CV	Run-to-run % CV	Total % CV
4.2	2.3	1.5	2.7
7.4	2.9	2.4	3.8
16.4	2.3	2.9	3.7
21.7	2.9	2.4	3.8
58.4	3.0	2.5	3.8
118.2	2.6	2.3	3.5

Standardization

The ADVIA Centaur LH assay standardization is traceable to World Health Organization (WHO) 2nd International Standard for human LH (IS 80/552). A comparison over the full assay range gave the following correlation:

$$\text{ADVIA Centaur LH} = 1.05\ (\text{WHO}) + 1.02\ \text{IU/mL}$$

$$r = 0.999$$

Assigned values for calibrators are traceable to this standardization.

Technical Assistance

For customer support, please contact your local technical support provider or distributor.

www.siemens.com/diagnostics

References

1. Kicklighter EJ, Norman RJ. The gonads. In: Kaplan LA, Pesce AJ, editors. Clinical chemistry: theory, analysis, and correlation. 2nd ed. St. Louis: CV Mosby, 1989. p.650–63.
2. Burtis CA, Ashwood ER. Gonadotropins (follicle-stimulating hormone, luteinizing hormone). In: Tietz NW, editor. Textbook of clinical chemistry. 2nd ed. Philadelphia: WB Saunders, 1994. p.1679.
3. Liwnicz BH, Liwnicz RG. The hypothalamopituitary system. In: Kaplan LA, Pesce AJ, editors. Clinical chemistry: theory, analysis, and correlation. 2nd ed. St. Louis: CV Mosby, 1989. p.613–9.
4. Nickel KL. The gonads. In: Kaplan LA, Pesce AJ, editors. Clinical chemistry; theory, analysis, correlation. 3rd ed. St. Louis: CV Mosby-Year Book, Inc., 1996. p.894.
5. Scott MG, Ladenson JH, Green ED, et al. Hormonal evaluation of female infertility and reproductive disorders. Clin Chem 1989;35:620–9.
6. Butt WR, Blunt SM. The role of the laboratory in the investigation of infertility. Ann Clin Biochem 1988;25:601–9.
7. Reissman TH, Felberbaum R, Diedrich K, et al. Development and applications of luteinizing hormone-releasing hormone antagonists in the treatment of infertility: an overview. Human Rep 1995;10(8):1974–81.
8. Reagent Water Technical Bulletin. Siemens Healthcare Diagnostics, 107060.
9. National Committee for Clinical Laboratory Standards. Procedures for the handling and processing of blood specimens; second edition; approved guideline. NCCLS Document H18-A2; Wayne (PA): NCCLS; 1999 Oct. 40p.
10. Boscato LM, Stuart MC. Heterophilic antibodies: a problem for all immunoassays. Clin Chem 1988;34:27–33.
11. National Committee for Clinical Laboratory Standards. How to define, determine, and utilize reference intervals in the clinical laboratory; approved guideline. NCCLS Document C28-A. Wayne (PA): NCCLS; 1995 June 59p.
12. National Committee for Clinical Laboratory Standards. Interference testing in clinical chemistry. Proposed Guideline. NCCLS document EP7-P. Wayne (PA):NCCLS;1986.

ADVIA Centaur, ReadyPack, and ACS:180 are trademarks of Siemens Healthcare Diagnostics.

© 2008 Siemens Healthcare Diagnostics Inc. All rights reserved.

US Pats 4,745,181; 4,918,192; 5,110,932; 5,609,822; 5,788,928

320

Origin: US

Siemens Healthcare Diagnostics Inc.
Tarrytown, NY 10591-5097 USA

EC REP Siemens Healthcare Diagnostics Ltd.
Sir William Siemens Sq.
Frimley, Camberley, UK GU16 8QD

Siemens Healthcare
Diagnostics Pty Ltd
885 Mountain Highway
Bayswater Victoria 3153
Australia

シーメンスヘルスケア・
ダイアグノスティクス株式会社
東京都品川区東五反田 3－20－14
Siemens Healthcare Diagnostics
輸入

321

Myoglobin (MYO)

CE

Assay Summary

Sample Type	***Serum, Heparinized Plasma***
Sample Volume	***10 µL***
Calibrator	***U***
Sensitivity and Assay Range	***3 – 1000 ng/mL (µg/L)***

Contents

REF	Contents	Number of Tests
09011232 (117031)	5 ReadyPack® primary reagent packs containing ADVIA Centaur® MYO Lite Reagent and Solid Phase ADVIA Centaur MYO Master Curve card	250
or		
05336153 (117030)	1 ReadyPack primary reagent pack containing ADVIA Centaur MYO Lite Reagent and Solid Phase ADVIA Centaur MYO Master Curve card	50

For a definition of symbols used in product labeling, please refer to *Understanding the Symbols* in Appendix D.

Intended Use

For *in vitro* diagnostic use in the quantitative determination of myoglobin in serum or plasma and as an aid in the diagnosis of acute myocardial infarction using the ADVIA Centaur and ADVIA Centaur XP systems.

Materials Required But Not Provided

REF	Description	Contents
06886505 (111084)	Calibrator U	6 vials of low calibrator CAL L 6 vials of high calibrator CAL H
or		
03684480 (111083)	Calibrator U	2 vials of low calibrator CAL L 2 vials of high calibrator CAL H

Optional Reagents

REF	Description	Contents
05440554 (117227)	ADVIA Centaur Multi-Diluent 10 M-DIL 10	2 ReadyPack ancillary reagent packs containing 5 mL/pack
04302166 (112370)	Multi-Diluent 10 M-DIL 10	10 mL/vial
111543	MYO Master Curve Material	8 x 1 mL

323

Summary and Explanation of the Test

Myoglobin is a 17,800 Dalton intracellular, oxygen-binding, heme protein, found in cardiac and skeletal muscle.[1] Myoglobin is noted for its rapid release into the circulation following tissue injury. Elevated levels of myoglobin can be found in conditions of muscle damage, such as acute and chronic skeletal muscle disease, renal failure, myocarditis, open-heart surgery, and after heavy exercise.[2]

Due to increased public awareness, patients present early to the emergency department after onset of symptoms of myocardial infarction.[2] Administering thrombolytic therapy within the first 6 hours of onset of chest pain is important to the prognosis of these patients and essential for early reperfusion with a positive clinical outcome.[1,3-5] Myoglobin releases into the circulation as early as 2 to 4 hours after cell damage, peaks at between 9 and 12 hours, and returns to normal within 24 to 36 hours.[6,7] In the absence of skeletal muscle trauma, myoglobin has been used as an early indicator of myocardial infarction, and therefore as a rule out indicator.[2]

Myoglobin has a negative predictive value of 99%, which improves the rule out capabilities of the emergency department and helps reduce the number of patients inappropriately admitted to the Coronary Care Units with symptoms atypical of acute myocardial infarction.[8] When used in combination with other cardiac markers such as CK-MB or troponin I, myoglobin is a valuable diagnostic tool to be used in the early evaluation of the potential acute myocardial infarction patient.[9]

Assay Principle

The ADVIA Centaur Myoglobin assay is a two-site sandwich immunoassay using direct chemiluminometric technology, which uses constant amounts of two antibodies. The first antibody, in the Lite Reagent, is a polyclonal goat anti-myoglobin antibody labeled with acridinium ester. The second antibody, in the Solid Phase, is a monoclonal mouse anti-myoglobin antibody, which is covalently coupled to paramagnetic particles.

The system automatically performs the following steps:

- dispenses 10 µL of sample into a cuvette
- dispenses 100 µL of Lite Reagent and incubates for 2.5 minutes at 37°C
- dispenses 200 µL of Solid Phase and incubates for 5.0 minutes at 37°C
- separates, aspirates, and washes the cuvettes with reagent water[10]
- dispenses 300 µL each of Acid Reagent and Base Reagent to initiate the chemiluminescent reaction
- reports results according to the selected option, as described in the system operating instructions or in the online help system

324

A direct relationship exists between the amount of myoglobin present in the patient sample and the amount of relative light units (RLUs) detected by the system.

Specimen Collection and Handling

Serum or heparinized plasma are the recommended sample types for this assay.

The effects of anticoagulants on the ADVIA Centaur Myoglobin assay were evaluated using 20 samples drawn into glass red top, glass SST, plastic SST, glass heparin, and plastic heparin collection tubes. Approximately 500 ng/mL of myoglobin was added to each sample and the percent recovery was determined. The ADVIA Centaur Myoglobin assay does not show a mean change in concentration greater than 5% as a result of the type of blood collection tube. Additionally, 149 plasma (heparinized) and serum sample pairs were assayed for myoglobin with the following results:

plasma myoglobin = 0.96 (serum myoglobin) + 1.73 ng/mL, r = 0.99

It is not recommended that sample types be used interchangeably with this test. The following recommendations for handling and storing blood samples are furnished by the National Committee for Clinical Laboratory Standards (NCCLS):[11]

- Collect all blood samples observing universal precautions for venipuncture.
- Allow samples to clot adequately before centrifugation.
- Keep tubes stoppered and upright at all times.
- Do not use samples that have been stored at room temperature for longer than 8 hours.
- Tightly cap and refrigerate specimens at 2 to 8°C if the assay is not completed within 8 hours.
- Freeze samples at or below -20°C if the sample is not assayed within 48 hours.
- Freeze samples only once and mix thoroughly after thawing.

Before placing samples on the system ensure that:

- Samples are free of fibrin or other particulate matter.
- Samples are free of bubbles.

Reagents

Store the reagents upright at 2–8°C.
Mix all primary reagent packs by hand before loading them onto the system. Visually inspect the bottom of the reagent pack to ensure that all particles are dispersed and resuspended. For detailed information about preparing the reagents for use, refer to Appendix C, *Handling Reagents*.

Reagent Pack	Reagent	Volume	Ingredients	Storage	Stability
ADVIA Centaur MYO ReadyPack primary reagent pack	Lite Reagent	5.0 mL/ reagent pack	polyclonal goat anti-myoglobin antibody (~0.08 µg/mL) labeled with acridinium ester in buffer with sodium azide (< 0.1%) and preservatives	2–8°C	until the expiration date on the pack label. For onboard stability, refer to *Onboard Stability and Calibration Interval.*

325

Reagent Pack	Reagent	Volume	Ingredients	Storage	Stability
	Solid Phase	10.0 mL/ reagent pack	monoclonal mouse anti-myoglobin antibody (~32 µg/mL) covalently coupled to paramagnetic particles in buffer with sodium azide (< 0.1%) and preservatives	2–8°C	until the expiration date on the pack label. For onboard stability, refer to *Onboard Stability and Calibration Interval.*
ADVIA Centaur [M-001] [10] ReadyPack ancillary reagent pack	Multi-Diluent 10	5.0 mL/ reagent pack	tris buffer with protein stabilizers, sodium azide (< 0.1%) and preservatives	2–8°C	until the expiration date on the pack label or 28 consecutive days after accessing the ancillary reagent pack

CAUTION: Sodium azide can react with copper and lead plumbing to form explosive metal azides. On disposal, flush reagents with a large volume of water to prevent the buildup of azides, if disposal into a drain is in compliance with federal, state, and local requirements.

CAUTION: This device contains material of animal origin and should be handled as a potential carrier and transmitter of disease.

For *In Vitro* Diagnostic Use.

Loading Reagents

Ensure that the system has sufficient primary and ancillary reagent packs. For detailed information about preparing the system, refer to the system operating instructions or to the online help system.

CAUTION: Mix all primary reagent packs by hand before loading them onto the system. Visually inspect the bottom of the reagent pack to ensure that all particles are dispersed and resuspended. For detailed information about preparing the reagents for use, refer to Appendix C, *Handling Reagents*.

Load the ReadyPack reagent packs in the primary reagent area using the arrows as a placement guide. The system automatically mixes the primary reagent packs to maintain homogeneous suspension of the reagents. For detailed information about loading reagents, refer to the system operating instructions or to the online help system.

If automatic dilution of a sample is required, load ADVIA Centaur Multi-Diluent 10 in the ancillary reagent entry.

Onboard Stability and Calibration Interval

Onboard Stability	Calibration Interval
28 days	14 days

Additionally, the ADVIA Centaur Myoglobin assay requires a two-point calibration:

- when changing lot numbers of primary reagent packs
- when replacing system components
- when quality control results are repeatedly out of range

CAUTION:

- Discard the primary reagent packs at the end of the onboard stability interval.
- Do not use reagents beyond the expiration date.

326

Master Curve Calibration

The ADVIA Centaur Myoglobin assay requires a Master Curve calibration when using a new lot number of Lite Reagent and Solid Phase. For each new lot number of Lite Reagent and Solid Phase, use the barcode reader or keyboard to enter the Master Curve values on the system. The Master Curve card contains the Master Curve values. For detailed information about entering calibration values, refer to the system operating instructions or to the online help system.

Quality Control

For detailed information about entering quality control values, refer to the system operating instructions or to the online help system.

To monitor system performance and chart trends, as a minimum requirement, two levels of quality control material should be assayed on each day that samples are analyzed. Quality control samples should also be assayed when performing a two-point calibration. Treat all quality control samples the same as patient samples.

Siemens Healthcare Diagnostics recommends the use of commercially available quality control materials with at least 2 levels (low and high). A satisfactory level of performance is achieved when the analyte values obtained are within the Acceptable Control Range for the system or within your range, as determined by an appropriate internal laboratory quality control scheme.

If the quality control results do not fall within the Expected Values or within the laboratory's established values, do not report results. Take the following actions:

- Verify that the materials are not expired.
- Verify that required maintenance was performed.
- Verify that the assay was performed according to the instructions for use.
- Rerun the assay with fresh quality control samples.
- If necessary, contact your local technical support provider or distributor for assistance.

Sample Volume

This assay requires 10 µL of sample for a single determination. This volume does not include the unusable volume in the sample container or the additional volume required when performing duplicates or other tests on the same sample. For detailed information about determining the minimum required volume, refer to *Sample Volume Requirements* in the *ADVIA Centaur Reference Manual.*

NOTE: The sample volume required to perform onboard dilution differs from the sample volume required to perform a single determination. Refer to the following information for the sample volume required to perform onboard dilutions:

Dilution	Sample Volume (µL)
1:2	70
1:10	40
1:20	20

Assay Procedure

For detailed procedural information, refer to the system operating instructions or to the online help system.

327

Procedural Notes

Calculations

For detailed information about how the system calculates results, refer to the system operating instructions or to the online help system.

The system reports serum myoglobin results in ng/mL (mass units) or µg/L (SI units), depending on the units defined when setting up the assay. The conversion formula is 1.0 ng/mL = 1.0 µg/L.

Dilutions

- Serum samples with myoglobin levels greater than 1000 ng/mL (µg/L) must be diluted and retested to obtain accurate results.
- Patient samples can be automatically diluted by the system or prepared manually.
- For automatic dilutions, ensure that ADVIA Centaur Multi-Diluent 10 is loaded and set the system parameters as follows:

  Dilution point: ≤ 1000 ng/mL (µg/L)

  Dilution factor: 2, 10, 20

  For detailed information about automatic dilutions, refer to the system operating instructions or to the online help system.
- Manually dilute the patient samples when patient results exceed the linearity of the assay using automatic dilution, or when laboratory protocol requires manual dilution.
- Use Multi-Diluent 10 to manually dilute patient samples, and then load the diluted sample in the sample rack, replacing the undiluted sample.
- Ensure that results are mathematically corrected for dilution. If a dilution factor is entered when scheduling the test, the system automatically calculates the result.

High Dose Hook Effect

Patient samples with high myoglobin levels can cause a paradoxical decrease in the RLUs (high dose hook effect). In this assay, patient samples with myoglobin levels as high as 200,000 ng/mL (µg/L) will assay greater than 1000 ng/mL (µg/L).

Disposal

Dispose of hazardous or biologically contaminated materials according to the practices of your institution. Discard all materials in a safe and acceptable manner, and in compliance with all federal, state, and local requirements.

Limitations

Heterophilic antibodies in human serum can react with reagent immunoglobulins, interfering with *in vitro* immunoassays.[12] Patients routinely exposed to animals or to animal serum products can be prone to this interference and anomalous values may be observed. Additional information may be required for diagnosis.

Specimens that are . . .	Demonstrate ≤ 5% change in results up to . . .
hemolyzed	1000 mg/dL of hemoglobin
lipemic	1000 mg/dL of triglycerides
icteric	40 mg/dL of conjugated bilirubin
	40 mg/dL of unconjugated bilirubin
proteinemic	12.5 g/dL of protein

Interference testing was determined according to NCCLS Document EP7-P.[13]

Expected Results

The expected results for the ACS:180® Myoglobin assay were previously established. Data was obtained on 723 patients in the following categories: 703 apparently healthy patients and 20 patients, results ranging up to 890.5 ng/mL (µg/L), with confirmed myocardial injury. Based on a cumulative distribution analysis of this data, a myoglobin value of > 110 ng/mL (µg/L) is highly suggestive of myocardial infarct.

Clinical Condition	Myoglobin Median Value (ng/mL) (µg/L)
Apparently healthy	36.4
Confirmed myocardial injury	282.8

These results were confirmed for the ADVIA Centaur Myoglobin assay by analyzing 480 samples in the range of 12.65 to 986.21 ng/mL (µg/L). Refer to *Method Comparison.*

As with all *in vitro* diagnostic assays, each laboratory should determine its own reference range(s) for the diagnostic evaluation of patient results.[14]

Performance Characteristics

Sensitivity and Assay Range

The ADVIA Centaur Myoglobin assay measures myoglobin concentrations up to 1000 ng/mL (µg/L) with a minimum detectable concentration (analytical sensitivity) of 3 ng/mL (µg/L). Analytical sensitivity is defined as the concentration of myoglobin that corresponds to the RLUs that are two standard deviations greater than the mean RLUs of 20 replicate determinations of the Myoglobin zero standard.

Method Comparison

For 480 samples in the range of 12.65 to 986.21 ng/mL (µg/L), the relationship between the ADVIA Centaur Myoglobin assay and the ACS:180 Myoglobin assay is described by the equation:

ADVIA Centaur Myoglobin = 1.02 (ACS:180 Myoglobin) – 1.69 ng/mL

Correlation coefficient (r) = 0.99

329

Dilution Recovery

Four human serum samples in the range of 710.2 to 935.1 ng/mL (µg/L) of myoglobin were diluted 1:2, 1:4, 1:8, 1:16, and 1:32 with Multi-Diluent 10 and assayed for recovery and parallelism. The recoveries ranged from 90.2% to 103.5% with a mean of 97.6%.

Sample	Dilution	Observed (ng/mL) (µg/L)	Expected (ng/mL) (µg/L)	Recovery %
1	—	935.1		
	1:2	465.9	467.5	99.7
	1:4	227.6	233.8	97.4
	1:8	111.3	116.9	95.2
	1:16	55.2	58.4	94.5
	1:32	29.3	29.2	100.4
	Mean			97.4
2	—	710.2		
	1:2	361.2	355.1	101.7
	1:4	176.1	177.6	99.2
	1:8	86.8	88.8	97.8
	1:16	42.5	44.4	95.7
	1:32	20.7	22.2	93.2
	Mean			97.5
3	—	864.1		
	1:2	431.3	432.0	99.8
	1:4	214.7	216.0	99.4
	1:8	108.9	108.0	100.9
	1:16	52.6	54.0	97.5
	1:32	26.9	27.0	99.6
	Mean			99.4
4	—	722.4		
	1:2	373.9	361.2	103.5
	1:4	178.4	180.6	98.8
	1:8	86.4	90.3	95.7
	1:16	41.4	45.2	91.8
	1:32	20.4	22.6	90.2
	Mean			96.0
Mean				**97.6**

Spiking Recovery

Varying amounts of myoglobin were added to four samples with endogenous myoglobin levels of 25.6 to 71.2 ng/mL (µg/L). The recoveries ranged from 91.8% to 110.8% with a mean of 102.4%.

Sample	Amount Added (ng/mL) (µg/L)	Observed (ng/mL) (µg/L)	Expected (ng/mL) (µg/L)	Recovery %
1	—	27.6		
	32	62.1	59.6	107.8
	64	93.7	91.6	103.3
	128	158.3	155.6	102.1
	400	424.8	427.6	99.3
	600	622.5	627.6	99.2
	800	822.5	827.6	99.4
	Mean			101.8

Sample	Amount Added (ng/mL) (µg/L)	Observed (ng/mL) (µg/L)	Expected (ng/mL) (µg/L)	Recovery %
2	—	25.6		
	32	59.2	57.6	105.0
	64	90.8	89.6	101.9
	128	159.8	153.6	104.8
	400	417.5	425.6	98.0
	600	620.3	625.6	99.1
	800	816.1	825.6	98.8
	Mean			101.3
3	—	28.7		
	32	63.7	60.7	109.4
	64	97.4	92.7	107.3
	128	170.5	156.7	110.8
	400	450.4	428.7	105.4
	600	610.8	628.7	97.0
	800	842.5	828.7	101.7
	Mean			105.3
4	—	71.2		
	32	104.7	103.2	104.7
	64	139.5	135.2	106.7
	128	212.6	199.2	110.5
	400	465.1	471.2	98.5
	600	645.9	671.2	95.8
	800	805.3	871.2	91.8
	Mean			101.3
Mean				**102.4**

Precision

Nine samples were assayed 6 times in each of 12 runs, on 4 systems (n = 72 for each sample), over a period of 4 days. The following results were obtained:

Mean (ng/mL) (µg/L)	Within-run% CV	Run-to-run% CV	Total% CV
53.11	2.6	2.8	3.8
63.55	2.7	3.4	4.4
71.87	3.1	3.8	4.9
143.38	2.3	1.3	2.6
223.72	3.4	2.0	2.9
312.94	2.4	1.8	3.0
362.06	2.7	1.1	2.9
455.21	2.5	1.5	2.9
681.65	2.3	2.0	3.0

Traceability of Standardization

The ADVIA Centaur Myoglobin assay is traceable to an internal standard manufactured using highly purified material. Assigned values for calibrators are traceable to this standardization.

Technical Assistance

For customer support, please contact your local technical support provider or distributor.

www.siemens.com/diagnostics

331

References

1. Chapelle JP, Lemache K, El Allaf M, et al. Fast Determination of Myoglobin in Serum Using a New Radial Partition Immunoassay. Clinical Biochemistry 1994;27:423-8.
2. Brogan GX, Friedman S, McCuskey C, et al. Evaluation of a New Rapid Quantitative Immunoassay for Serum Myoglobin Versus CK-MB for Ruling Out Acute Myocardial Infarction in the Emergency Department. Annals of Emergency Medicine 1994;24(4):665-71.
3. Abe J, Yamaguchi T, et al. Myocardial reperfusion can be predicted by myoglobin/creatinine kinase ratio of a single blood sample obtained at the time of admission. Am Heart J 1993;72:639.
4. Ellis A, Saran B. Kinetics of Myoglobin Release and Prediction of Myocardial Myoglobin Depletion After Coronary Artery Reperfusion. Circulation Sept. 1989;80(3):676-88.
5. Ellis A, Little T, Masud A, et al. Patterns of myoglobin release after reperfusion of injured myocardium. Circulation Sept. 1985;72(3):639-47.
6. Bhayana V, Cohoe S, Pellar T, et al. Combination (Multiple) Testing for Myocardial Infarction Using Myoglobin, Creatine Kinase-2 (Mass), and Troponin T. Clinical Biochemistry 1994;27:395-406.
7. Collinson PO, Young LJ, Foo AY, et al. Early Diagnosis of Acute Myocardial Infarction. Ann Clin Biochem 1994;31:301-2.
8. Tucker JF, Collins RA, Anderson AJ, et al. Value of Serial Myoglobin Levels in the Early Diagnosis of Patients Admitted for Acute Myocardial Infarction. Annals of Emergency Medicine 1994;24(4):704-8.
9. Wong S. Strategic Utilization of Cardiac Markers for the Diagnosis of Acute Myocardial Infarction. Ann Clin Lab Sci Jul-Aug 1996;26(4):301-12.
10. Reagent Water Technical Bulletin. Siemens Healthcare Diagnostics, 107060.
11. National Committee for Clinical Laboratory Standards. Procedures for the handling and processing of blood specimens; second edition; approved guideline. NCCLS Document H18-A2; Wayne (PA): NCCLS; 1999 Oct. 40p.
12. Boscato LM, Stuart MC. Heterophilic antibodies: a problem for all immunoassays. Clin Chem 1988;34:27–33.
13. National Committee for Clinical Laboratory Standards. Interference testing in clinical chemistry. Proposed Guideline. NCCLS document EP7-P. Wayne (PA):NCCLS;1986.
14. National Committee for Clinical Laboratory Standards. How to define, determine, and utilize reference intervals in the clinical laboratory. Approved Guideline. NCCLS document C28-A. Wayne (PA):NCCLS; 1995 59p.

ADVIA Centaur, ReadyPack and ACS:180 are trademarks of Siemens Healthcare Diagnostics.

© 2008 Siemens Healthcare Diagnostics Inc. All rights reserved.

US Pats 4,745,181; 4,918,192; 5,110,932; 5,656,426; 5,609,822; 5,788,928

Origin: US

Siemens Healthcare Diagnostics Inc.
Tarrytown, NY 10591-5097 USA

EC REP Siemens Healthcare Diagnostics Ltd.
Sir William Siemens Sq.
Frimley, Camberley, UK GU16 8QD

Siemens Healthcare
Diagnostics Pty Ltd
885 Mountain Highway
Bayswater Victoria 3153
Australia

シーメンスヘルスケア・
ダイアグノスティクス株式会社
東京都品川区東五反田 3－20－14
Siemens Healthcare Diagnostics
輸入

Phenobarbital (PHNB)

CE

Assay Summary

Sample Type	*Serum, Heparinized Plasma, EDTA Plasma*
Sample Volume	*10 µL*
Calibrator	*PHNB*
Sensitivity and Assay Range	*0.4 – 80 µg/mL (1.72 – 344.8 µmol/L)*

Contents

REF	Contents	Number of Tests
05190841	1 ReadyPack® primary reagent pack containing ADVIA Centaur® PHNB Lite Reagent and Solid Phase 1 ReadyPack ancillary reagent packs containing ADVIA Centaur PHNB Releasing Agent [REL] ADVIA Centaur PHNB Master Curve card	50

For a definition of symbols used in product labeling, please refer to *Understanding the Symbols* in Appendix D.

Intended Use

For *in vitro* diagnostic use in the quantitative determination of phenobarbital in serum or plasma using the ADVIA Centaur and ADVIA Centaur XP systems.

Materials Required But Not Provided

REF	Description	Contents
05191007	PHNB Calibrator	6 vials of low calibrator [CAL L] 6 vials of high calibrator [CAL H]
or		
05190965	PHNB Calibrator	2 vials of low calibrator [CAL L] 2 vials of high calibrator [CAL H]

Optional Reagents

REF	Description	Contents
04311114 (110317)	ADVIA Centaur Multi-Diluent 5 [M-DIL 5]	2 ReadyPack ancillary reagent packs containing 5 mL/pack
08839946 (570055)	Multi-Diluent 5 [M-DIL 5]	20 mL/vial
05192011	PHNB Master Curve Material	6 x 1 mL

333

Summary and Explanation of the Test

Phenobarbital is a nonselective central nervous system (CNS) depressant that is used to treat tonic-clonic (grand mal) seizures and is also used, usually with phenytoin, to treat focal (temporal lobe) seizures.[1,2] It is sometimes used as a sedative, a hypnotic, and a pre-anesthesia medication.[2]

Phenobarbital is distributed rapidly to all tissues, but especially to the brain, the kidneys, and the liver. Phenobarbital is considered a long-acting barbiturate. It has a half-life of 53 to 118 hours in adults and 60 to 180 hours in children and newborns.[2] The anticonvulsant drugs phenytoin and valproic acid enhance phenobarbital effects.[1] Monoamine oxidase inhibitors inhibit phenobarbital metabolism and thereby prolong the effects of the drug.[2]

The individual response to phenobarbital varies greatly due to differences in absorption and metabolism. Individuals with increased protein binding of phenobarbital can show decreased response to the drug because the free concentration may fall below the therapeutic range, which is approximately 15 to 40 µg/mL (64.65 to 172.40 µmol/L) for adults.[3] The elderly and debilitated, and individuals with impaired liver or kidney function, may show increased response to phenobarbital, even at therapeutic concentrations.[1,2]

Adverse effects of phenobarbital at therapeutic concentrations include sedation, ataxia, confusion, and dizziness.[1] Phenobarbital is toxic at concentrations above the therapeutic range. The toxic effects of phenobarbital are dose-related and include CNS, cardiovascular, and respiratory depression. Severe phenobarbital intoxication can be fatal.[4]

Therapeutic drug monitoring of serum concentrations of phenobarbital aids the physician in establishing the optimum therapeutic dose that accounts for individual differences in absorption and metabolism. Routine monitoring of phenobarbital concentrations can confirm patient compliance with the established dosing regimen.[1,5]

Phenobarbital also is included routinely in toxicological drug screening. Quantitative measurement of phenobarbital is valuable in such cases because the serum concentrations of the drug correspond closely to its pharmacological effects.[4,6]

Assay Principle

The ADVIA Centaur Phenobarbital assay is a competitive immunoassay using direct chemiluminescent technology. Phenobarbital in the patient sample competes with acridinium ester-labeled phenobarbital in the Lite Reagent for a limited amount of monoclonal mouse anti-phenobarbital antibody, which is covalently coupled to paramagnetic particles in the Solid Phase.

The system automatically performs the following steps:

- dispenses 10 µL of sample and 50 µL of Phenobarbital Releasing Agent into a cuvette
- dispenses 400 µL of Solid Phase and incubates for 5.0 minutes at 37°C
- dispenses 50 µL of Lite Reagent and incubates for 2.5 minutes at 37°C
- separates, aspirates, and washes the cuvettes with reagent water[7]
- dispenses 300 µL each of Acid Reagent and Base Reagent to initiate the chemiluminescent reaction
- reports results according to the selected option, as described in the system operating instructions or in the online help system

An inverse relationship exists between the amount of phenobarbital present in the patient sample and the amount of relative light units (RLUs) detected by the system.

334

Specimen Collection and Handling

NOTE: Available literature references present conflicting and complex recommendations on the use of gel barrier tubes for therapeutic drug monitoring samples. Each lab should contact their specific tube manufacturer for additional information and recommendations for therapeutic drug monitoring testing with the ADVIA Centaur systems.

Serum, heparinized plasma, or EDTA plasma are the recommended sample types for this assay.

Average measured phenobarbital concentrations of samples, [n = 10: range 31 to 35 µg/mL (136.2 to 150.8 µmol/L)] collected in heparin collection tubes, were within 100.1% (range: 96.9% to 109.7%) of measured phenobarbital concentrations in control red top serum collection tubes. Samples (n = 10) collected in EDTA collection tubes had measured phenobarbital concentrations within 100.2% (range: 97.4% to 102.7%) of control red top serum collection tubes.

The following recommendations for handling and storing blood samples are furnished by the Clinical and Laboratory Standards Institute (CLSI, formerly NCCLS):[8]

- Collect all blood samples observing universal precautions for venipuncture.
- Allow samples to clot adequately before centrifugation.
- Keep tubes stoppered and upright at all times.
- Do not use samples that have been stored at room temperature for longer than 8 hours.
- Tightly cap and refrigerate specimens at 2 to 8°C if the assay is not completed within 8 hours.
- Freeze samples at or below -20°C if the sample is not assayed within 48 hours.
- Freeze samples only once and mix thoroughly after thawing.

Before placing samples on the system ensure that:

- Samples are free of fibrin or other particulate matter.
- Samples are free of bubbles.

Reagents

Store the reagents upright at 2–8°C.
Mix all primary reagent packs by hand before loading them onto the system. Visually inspect the bottom of the reagent pack to ensure that all particles are dispersed and resuspended. For detailed information about preparing the reagents for use, refer to Appendix C, *Handling Reagents*.

Reagent Pack	Reagent	Volume	Ingredients	Storage	Stability
ADVIA Centaur PHNB ReadyPack primary reagent pack	Lite Reagent	2.5 mL/ reagent pack	acridinium ester-labeled phenobarbital (~302 pg/mL) in buffer with preservatives	2–8°C	until the expiration date on the pack label. For onboard stability, refer to *Onboard Stability and Calibration Interval.*
	Solid Phase	20.0 mL/ reagent pack	monoclonal mouse anti-phenobarbital antibody (~4 µg/mL) covalently coupled to paramagnetic particles in buffer with preservatives	2–8°C	until the expiration date on the pack label. For onboard stability, refer to *Onboard Stability and Calibration Interval.*
ADVIA Centaur REL ReadyPack ancillary reagent pack	Releasing Agent	25.0 mL/ reagent pack	0.2 M CAPS buffer with preservatives	2–8°C	until the expiration date on the pack label. For onboard stability, refer to *Onboard Stability and Calibration Interval.*
ADVIA Centaur M-DIL 5 ReadyPack ancillary reagent pack	Multi-Diluent 5	5.0 mL/ reagent pack	human plasma with sodium azide (< 0.1%)	2–8°C	until the expiration date on the pack label or 28 consecutive days after accessing the ancillary reagent pack

CAUTION! POTENTIAL BIOHAZARD: Contains human source material. While each human serum or plasma donor unit used in the manufacture of this product was tested by FDA-approved methods and found nonreactive for hepatitis B surface antigen (HBsAg), antibody to hepatitis C (HCV), and antibody to HIV-1/2, all products manufactured using human source material should be handled as potentially infectious. Because no test method can offer complete assurance that hepatitis B or C viruses, HIV, or other infectious agents are absent, these products should be handled according to established good laboratory practices.[9-11]

CAUTION: This device contains material of animal origin and should be handled as a potential carrier and transmitter of disease.

For *In Vitro* Diagnostic Use.

Loading Reagents

Ensure that the system has sufficient primary and ancillary reagent packs. For detailed information about preparing the system, refer to the system operating instructions or to the online help system.

Mix all primary reagent packs by hand before loading them onto the system. Visually inspect the bottom of the reagent pack to ensure that all particles are dispersed and resuspended. For detailed information about preparing the reagents for use, refer to Appendix C, *Handling Reagents*.

Load the ReadyPack reagent packs in the primary reagent area using the arrows as a placement guide. The system automatically mixes the primary reagent packs to maintain homogeneous suspension of the reagents. For detailed information about loading reagents, refer to the system operating instructions or to the online help system.

If automatic dilution of a sample is required, load ADVIA Centaur Multi-Diluent 5 in the ancillary reagent entry.

336

NOTE: The Phenobarbital Releasing Agent provided in this kit is matched to the Solid Phase and Lite Reagent. Do not mix Phenobarbital Releasing Agent lots with different lots of Solid Phase and Lite Reagent.

NOTE: The Phenobarbital Releasing Agent pack contains more volume than required to perform 50 tests. Since the Phenobarbital Releasing Agent is matched to the Solid Phase and Lite Reagent in the ReadyPack primary reagent pack, dis-card the Releasing Agent pack when the ReadyPack primary reagent pack is dis-carded. Do not use beyond the onboard stability.

Onboard Stability and Calibration Interval

Onboard Stability	Calibration Interval
14 days	28 days

Additionally, the ADVIA Centaur Phenobarbital assay requires a two-point calibration:

- when changing lot numbers of primary reagent packs
- when replacing system components
- when quality control results are repeatedly out of range

NOTE:

- Discard the primary reagent packs at the end of the onboard stability interval.
- Do not use reagents beyond the expiration date.

Master Curve Calibration

The ADVIA Centaur Phenobarbital assay requires a Master Curve calibration when using a new lot number of Lite Reagent and Solid Phase. For each new lot number of Lite Reagent and Solid Phase, use the barcode reader or keyboard to enter the Master Curve values on the system. The Master Curve card contains the Master Curve values. For detailed information about entering calibration values, refer to the system operating instructions or to the online help system.

Quality Control

For detailed information about entering quality control values, refer to the system operating instructions or to the online help system.

To monitor system performance and chart trends, as a minimum requirement, two levels of quality control material should be assayed on each day that samples are analyzed. Quality control samples should also be assayed when performing a two-point calibration. Treat all quality control samples the same as patient samples.

Siemens Healthcare Diagnostics recommends the use of commercially available quality control materials with at least 2 levels (low and high). A satisfactory level of performance is achieved when the analyte values obtained are within the Acceptable Control Range for the system or within your range, as determined by an appropriate internal laboratory quality control scheme.

If the quality control results do not fall within the Expected Values or within the laboratory's established values, do not report results. Take the following actions:

- Verify that the materials are not expired.
- Verify that required maintenance was performed.
- Verify that the assay was performed according to the instructions for use.
- Rerun the assay with fresh quality control samples.
- If necessary, contact your local technical support provider or distributor for assistance.

337

Sample Volume

This assay requires 10 µL of sample for a single determination. This volume does not include the unusable volume in the sample container or the additional volume required when performing duplicates or other tests on the same sample. For detailed information about determining the minimum required volume, refer to *Sample Volume Requirements* in the *ADVIA Centaur Reference Manual.*

NOTE: The sample volume required to perform onboard dilution differs from the sample volume required to perform a single determination. Refer to the following information for the sample volume required to perform onboard dilutions:

Dilution	Sample Volume (µL)
1:2	100

Assay Procedure

For detailed procedural information, refer to the system operating instructions or to the online help system.

Procedural Notes

Calculations

For detailed information about how the system calculates results, refer to the system operating instructions or to the online help system.

The system reports phenobarbital results in µg/mL (common units) or µmol/L (SI units), depending on the units defined when setting up the assay. The conversion formula is 1 µg/mL = 4.31 µmol/L.

Dilutions

- Dilute and retest samples with phenobarbital levels greater than 80 µg/mL (344.8 µmol/L) to obtain accurate results.
- Patient samples can be automatically diluted by the system or prepared manually.
- For automatic dilutions, ensure that ADVIA Centaur Multi-Diluent 5 is loaded and set the system parameters as follows:

  Dilution point: ≤ 80 µg/mL (344.8 µmol/L)

  Dilution factor: 2

  For detailed information about automatic dilutions, refer to the system operating instructions or to the online help system.
- Manually dilute the patient samples when patient results exceed the linearity of the assay using automatic dilution, or when laboratory protocol requires manual dilution.
- Use Multi-Diluent 5 to manually dilute patient samples, and then load the diluted sample in the sample rack, replacing the undiluted sample.
- Ensure that results are mathematically corrected for dilution. If a dilution factor is entered when scheduling the test, the system automatically calculates the result.

Disposal

Dispose of hazardous or biologically contaminated materials according to the practices of your institution. Discard all materials in a safe and acceptable manner, and in compliance with all federal, state, and local requirements.

338

Limitations

Heterophilic antibodies in human serum can react with reagent immunoglobulins, interfering with *in vitro* immunoassays.[12] Patients routinely exposed to animals or to animal serum products can be prone to this interference and anomalous values may be observed. Additional information may be required for diagnosis.

Serum specimens that are . . .	Demonstrate ≤ 5% change in results up to . . .
hemolyzed	500 mg/dL of hemoglobin
lipemic	1000 mg/dL of triglycerides
icteric	20 mg/dL of bilirubin

Expected Results

A therapeutic range of 15 to 40 µg/mL (64.65 to 172.40 µmol/L) has been previously reported for phenobarbital.[3]

As with all therapeutic drug assays, each laboratory should determine the appropriateness of this range for the diagnostic evaluation of patient results.[13]

Performance Characteristics

Specificity

Pooled serum samples at therapeutic phenobarbital levels of approximately 20 µg/mL (86.2 µmol/L) were spiked with the compounds listed at the levels indicated. ADVIA Centaur Phenobarbital assay results from the spiked samples were compared with those of unspiked control samples. Percent cross-reactivity is calculated as:

$$\% \text{ cross-reactivity} = \frac{(\text{concentration of spiked sample} - \text{concentration of unspiked sample})}{\text{concentration of unspiked sample}} \times 100$$

Compound	Amount Added (µg/mL)	% Cross-reactivity	Compound	Amount Added (µg/mL)	% Cross-reactivity
Amitriptyline	2.5	1.7	p-Hydroxy-phenobarbital	20	-3.1
Amobarbital	10	6.5	Imipramine	2.5	-1.5
Butabarbital	10	-3.9	Mephenytoin	250	-0.5
Carbamazepine	120	-0.3	Methsuximide	75	-4.6
Carbamazepine-10,11-epoxide	120	-2.7	Pentobarbital	10	0
Chlorazepate	10	1.7	2-Phenyl-2-ethylmalonamide	500	-4.2
Chlorodiazepoxide	20	-1.2	Phenytoin	100	0.4
Chlorpromazine	150	-4.4	Primidone	100	-2.6
Diazepam	50	0.4	Promethazine	10	0.1
Ethosuximide	300	-0.6	Secobarbital	25	4.2
Ethotoin	250	-7.2	Valproic acid	50	0.7
5-Ethyl-5-phenylhydantoin	1000	3.7			

Mephobarbital cross-reacts greater than 100% in the ADVIA Centaur Phenobarbital assay.

In addition, the following compounds were spiked into patient serum samples without phenobarbital and the following results were obtained. Percent cross-reactivity is calculated as:

$$\% \text{ cross-reactivity} = \frac{(\text{concentration of spiked sample} - \text{concentration of unspiked sample})}{\text{amount of compound spiked}} \times 100$$

Compound	Amount Added (µg/mL)	% Cross-reactivity
p-Hydroxyphenobarbital	1000	ND*
Amobarbital	10.0	12.1
Pentobarbital	1000	2.3
Secobarbital	1000	5.8
Butabarbital	1000	2.3

* ND = Not Detectable.

Interference testing was determined according to CLSI Document EP7-A2.[14]

Sensitivity and Assay Range

The ADVIA Centaur Phenobarbital assay measures phenobarbital concentrations up to 80 µg/mL (344.8 µmol/L) with a minimum detectable concentration of 0.4 µg/mL (1.72 µmol/L). Analytical sensitivity is defined as the concentration of phenobarbital that corresponds to the RLUs that are two standard deviations less than the mean RLUs of 20 replicate determinations of the Phenobarbital zero standard.

Method Comparison

For 278 samples in the range of 0.52 to 64.63 µg/mL (2.25 to 278.56 µmol/L), the relationship between the ADVIA Centaur Phenobarbital assay and the ACS:180® Phenobarbital assay is described by the equation:

ADVIA Centaur Phenobarbital = 1.01 (ACS:180 Phenobarbital) + 0.19 µg/mL

Correlation coefficient (r) = 0.98

Dilution Recovery

Six human serum samples in the range of 38.38 to 43.83 µg/mL (165.4 to 188.9 µmol/L) of phenobarbital were diluted 1:2, 1:4, 1:8, and 1:16 with Multi-Diluent 5 and assayed for recovery and parallelism. The recoveries ranged from 87.6% to 106.5% with a mean of 98.3%.

Sample	Dilution	Observed (µg/mL)	Expected (µg/mL)	Observed (µmol/L)	Expected (µmol/L)	Recovery %
1	—	38.38		165.42		
	1:2	18.26	19.19	78.70	82.71	95.2
	1:4	9.04	9.59	38.96	41.33	94.2
	1:8	4.26	4.80	18.36	20.69	88.8
	1:16	2.10	2.40	9.05	10.34	87.6
	Mean					91.4
2	—	39.00		168.09		
	1:2	19.44	19.50	83.79	84.04	99.7
	1:4	9.73	9.75	41.94	42.02	99.8
	1:8	4.99	4.87	21.51	20.99	102.3
	1:16	2.29	2.44	9.87	10.52	93.9
	Mean					98.9
3	—	39.92		172.06		
	1:2	20.32	19.96	87.58	86.03	101.8
	1:4	9.73	9.98	41.94	43.01	97.5
	1:8	5.09	4.99	21.94	21.51	101.9
	1:16	2.55	2.50	10.99	10.77	102.4
	Mean					100.9
4	—	42.21		181.93		
	1:2	21.32	21.11	91.89	90.98	101.0
	1:4	10.24	10.55	44.13	45.47	97.1
	1:8	5.12	5.28	22.07	22.76	97.1
	1:16	2.36	2.64	10.17	11.38	89.6
	Mean					96.2
5	—	43.00		185.33		
	1:2	22.89	21.50	98.66	92.66	106.5
	1:4	11.08	10.75	47.75	46.33	103.1
	1:8	5.43	5.38	23.40	23.19	101.0
	1:16	2.75	2.69	11.85	11.59	102.4
	Mean					103.2
6	—	43.83		188.91		
	1:2	22.15	21.92	95.47	94.48	101.1
	1:4	10.67	10.96	45.99	47.24	97.4
	1:8	5.41	5.48	23.32	23.62	98.7
	1:16	2.72	2.74	11.72	11.81	99.4
	Mean					99.1
Mean						**98.3**

Spiking Recovery

Varying amounts of phenobarbital were added to five drug-free serum samples. The recoveries ranged from 97.1% to 113.2% with a mean of 103.7%.

Sample	Amount Added (µg/mL)	Observed (µg/mL)	Amount Added (µmol/L)	Observed (µmol/L)	Recovery %
1	—		—		
	5	5.42	21.6	23.4	108.4
	10	15.59	64.7	67.2	103.9
	25	29.95	129.3	129.1	99.8
	45	56.59	215.5	244.3	113.2
	70	81.98	323.3	353.3	109.3
	Mean				106.9
2	—		—		
	5	5.12	21.6	22.1	103.8
	10	15.42	64.7	66.5	102.9
	25	31.95	129.3	137.7	100.8
	45	52.54	215.5	226.4	99.1
	70	79.10	323.3	340.9	99.8
	Mean				101.3
3	—		—		
	5	5.27	21.6	21.4	105.4
	10	15.44	64.7	62.5	102.9
	25	31.89	129.3	121.4	106.3
	45	52.62	215.5	219.7	105.2
	70	74.82	323.3	324.5	104.2
	Mean				104.8
4	—		—		
	5	5.18	21.6	19.5	103.6
	10	15.97	64.7	66.5	106.5
	25	30.43	129.3	129.2	101.4
	45	48.56	215.5	223.6	97.1
	70	75.31	323.3	328.9	100.4
	Mean				101.8
5	—		—		
	5	5.28	21.6	22.4	102.8
	10	15.62	64.7	64.6	104.1
	25	32.58	129.3	128.9	108.6
	45	50.49	215.5	222.1	101.0
	70	76.21	323.3	324.1	101.6
	Mean				103.6
Mean					**103.7**

Precision

Four samples were assayed 6 times in 6 assays, on each of 4 systems (n = 144 for each sample), over a period of 3 days. The following results were obtained:

Mean (µg/mL)	Mean (µmol/L)	Within-run % CV	Run-to-Run % CV	Total % CV
11.43	49.26	9.8	6.4	11.6
14.18	61.12	7.0	5.0	8.6
29.80	128.44	6.2	3.7	7.2
54.63	235.46	6.1	2.7	6.7

Traceability of Standardization

The ADVIA Centaur Phenobarbital assay is traceable to an internal standard manufactured using U.S.P. (United States Pharmacopeia) material. Standard reference materials (SRM 900) from NIST (National Institute of Standards and Technology) was evaluated and found to recover on average 100% of target concentration. Assigned values for calibrators are traceable to this standardization.

Technical Assistance

For customer support, please contact your local technical support provider or distributor.

www.siemens.com/diagnostics

References

1. Dichter MA. The epilepsies and convulsive disorders. In: Wilson JD et al, eds.Harrison's principles of internal medicine. New York: McGraw-Hill, 1991; 1968–1977.
2. Physicians GenRx 1994. New York: Data Pharmaceutica Inc., 1994; II-1769–1773.
3. Painter PC, Cope JY, and Smith JL. Appendix. In: Burtis CA, Ashwood ER, eds. Tietz textbook of clinical chemistry, 2nd edition. Philadelphia: Saunders, 1994; 2161–2217.
4. Porter WH, Moyer TP. Clinical toxicology. In: Burtis CA, Ashwood ER, eds.Tietz textbook of clinical chemistry, 2nd edition. Philadelphia: Saunders, 1994; 1155–1235.
5. Moriarty G. Central nervous system. In: Kaplan LA and Pesce AJ, Clinical chemistry: theory, analysis, and correlation, 2nd edition. St. Louis: CV Mosby, 1989; 594–606.
6. Pesce AJ. Barbiturates. In: Kaplan LA and Pesce AJ, Clinical chemistry: theory, analysis, and correlation, 2nd edition. St. Louis: CV Mosby, 1989; 1081–1088.
7. Reagent Water Technical Bulletin. Siemens Healthcare Diagnostics, 107060.
8. Clinical and Laboratory Standards Institute (formerly NCCLS). Procedures for the handling and processing of blood specimens; approved guideline - third edition. Wayne, PA: Clinical and Laboratory Standards Institute; 2004. NCCLS Document H18-A3.
9. Centers for Disease Control. 1988. Update: Universal precautions for prevention of transmission of human immunodeficiency virus, hepatitis B virus and other bloodborne pathogens in healthcare settings. MMWR, 37:377-382, 387, 388.
10. Clinical and Laboratory Standards Institute (formerly NCCLS). Protection of laboratory workers from occupationally acquired infections; approved guideline - third edition. Wayne, PA: Clinical and Laboratory Standards Institute; 2005. NCCLS Document M29-A3.
11. Federal Occupational Safety and Health Administration, Bloodborne Pathogens Standard, 29 CFR 1910.1030.
12. Boscato LM, Stuart MC. Heterophilic antibodies: a problem for all immunoassays. Clin Chem 1988;34:27–33.
13. Clinical and Laboratory Standards Institute (formerly NCCLS). How to define and determine reference intervals in the clinical laboratory; approved guideline - second edition. Wayne, PA: Clinical and Laboratory Standards Institute; 2000. NCCLS Document C28-A2.
14. Clinical and Laboratory Standards Institute (formerly NCCLS). Interference testing in clinical chemistry; approved guideline - second edition. Wayne, PA: Clinical and Laboratory Standards Institute; 2005. NCCLS Document EP7-A2.

ADVIA Centaur, ReadyPack, and ACS:180 are trademarks of Siemens Healthcare Diagnostics.

© 2008 Siemens Healthcare Diagnostics Inc. All rights reserved.

US Pats 4,745,181; 4,918,192; 5,110,932; 5,241,070; 5,538,901; 5,656,426; 5,609,822; 5,788,928

343

Origin: US

Siemens Healthcare Diagnostics Inc.
Tarrytown, NY 10591-5097 USA

EC REP Siemens Healthcare Diagnostics Ltd.
Sir William Siemens Sq.
Frimley, Camberley, UK GU16 8QD

Siemens Healthcare
Diagnostics Pty Ltd
885 Mountain Highway
Bayswater Victoria 3153
Australia

シーメンスヘルスケア・
ダイアグノスティクス株式会社
東京都品川区東五反田3−20−14
Siemens Healthcare Diagnostics
輸入

Phenytoin (PHTN)

CE

Assay Summary

Sample Type	*Serum, Heparinized Plasma, EDTA Plasma*
Sample Volume	*10 µL*
Calibrator	*PHTN*
Sensitivity and Assay Range	*0.5–40 µg/mL (1.98–158.4 µmol/L)*

Contents

REF	Contents	Number of Tests
08765276 (120539)	5 ReadyPack® primary reagent packs containing ADVIA Centaur® PHTN Lite Reagent and Solid Phase ADVIA Centaur PHTN Master Curve card	250
or		
06204560 (120538)	1 ReadyPack primary reagent pack containing ADVIA Centaur PHTN Lite Reagent and Solid Phase ADVIA Centaur PHTN Master Curve card	50

For a definition of symbols used in product labeling, refer to *Understanding the Symbols* in Appendix D.

Intended Use

For *in vitro* diagnostic use in the quantitative determination of phenytoin in serum or plasma using the ADVIA Centaur and ADVIA Centaur XP systems.

Materials Required But Not Provided

REF	Description	Contents
01303587	PHTN Calibrator	6 vials of low calibrator CAL L
(570404)		6 vials of high calibrator CAL H
or		
02709471	PHTN Calibrator	2 vials of low calibrator CAL L
(570403)		2 vials of high calibrator CAL H

Optional Reagents

REF	Description	Contents
04311114 (110317)	ADVIA Centaur Multi-Diluent 5 M-DIL 5	2 ReadyPack ancillary reagent packs containing 5 mL/pack
08839946 (570055)	Multi-Diluent 5 M-DIL 5	20 mL/vial
570402	PHTN Master Curve Material	6 x 1 mL

Summary and Explanation of the Test

Phenytoin is the most widely prescribed anti-convulsant drug. Phenytoin is considered the drug of choice for generalized major motor (grand mal epilepsy) and focal seizures.[1,2] It can also be used to treat elementary partial (focal) or complex partial (psychomotor, temporal lobe) seizures.[1,2] Phenytoin is highly bound to protein in plasma and pharmacologically active in the free, unbound form.[3-6] Approximately 10% of the phenytoin is unbound in individuals with normal albumin levels and normal renal function.[3-6]

Phenytoin demonstrates unusual elimination characteristics that makes estimating the dose/concentration relationship difficult. Significant interindividual differences have been reported in phenytoin absorption, metabolism, and elimination.[7,8] A major metabolic pathway for phenytoin is hydroxylation to para-hydroxyphenylphenyl-hydantoin (HPPH), followed by glucuronidation and elimination in urine.[9,10] When the daily dosage exceeds metabolic capacity, saturation occurs. At this point, the phenytoin serum concentration begins to increase at a much faster rate than the proportionate increase in dose.[4,6] Concentrations above the therapeutic range of 10 to 20 µg/mL (39.6 to 79.2 µmol/L)[11-14] can result in toxic effects, which include nystagmus, ataxia, drowsiness, tremor, confusion, and psychiatric disturbances.[7-10] Dosage versus pharmacological activity for the drug is further complicated by disease states, medication, and patient compliance. Routine monitoring of serum phenytoin concentrations is necessary to maintain therapeutic efficacy and avoid toxicity.

Assay Principle

The ADVIA Centaur Phenytoin assay is a competitive immunoassay using direct chemiluminescent technology. Phenytoin in the patient sample competes with a phenytoin analog, which is covalently coupled to paramagnetic particles in the Solid Phase for binding to a monoclonal mouse anti-phenytoin antibody labeled with acridinium ester in the Lite Reagent.

The system automatically performs the following steps:

- dispenses 10 µL of sample into a cuvette
- dispenses 400 µL of Solid Phase and incubates for 2.5 minutes at 37°C
- dispenses 100 µL of Lite Reagent and incubates for 5.0 minutes at 37°C
- separates, aspirates, and washes the cuvettes with reagent water[15]
- dispenses 300 µL each of Acid Reagent and Base Reagent to initiate the chemiluminescent reaction
- reports results according to the selected option, as described in the system operating instructions or in the online help system

An inverse relationship exists between the amount of phenytoin present in the patient sample and the amount of relative light units (RLUs) detected by the system.

Specimen Collection and Handling

NOTE: Available literature references present conflicting and complex recommendations on the use of gel barrier tubes for therapeutic drug monitoring samples. Each lab should contact their specific tube manufacturer for additional information and recommendations for therapeutic drug monitoring testing with the ADVIA Centaur systems.

Serum, heparinized plasma, or EDTA plasma are the recommended sample types for this assay.

The effects of anticoagulants on the ADVIA Centaur Phenytoin assay were evaluated using 10 matched donor sets of blood drawn into red top serum, glass serum gel separator, heparin, and EDTA collection tubes. Phenytoin [from 8 to 23 µg/mL (31.7 to 91.1 µmol/L)] was added to each sample and the percent recovery was determined. All samples were run in replicates of six. The percent recovery for samples collected into glass serum gel separator tubes, heparin, and EDTA was found to be equivalent to samples collected into red top serum collection tubes.

The following recommendations for handling and storing blood samples are furnished by the Clinical and Laboratory Standards Institute (CLSI, formerly NCCLS):[16]

- Collect all blood samples observing universal precautions for venipuncture.
- Allow samples to clot adequately before centrifugation.
- Keep tubes stoppered and upright at all times.

346

- Do not use samples that have been stored at room temperature for longer than 8 hours.
- Tightly cap and refrigerate specimens at 2° to 8°C if the assay is not completed within 8 hours.
- Freeze samples at or below -20°C if the sample is not assayed within 48 hours.
- Freeze samples only once and mix thoroughly after thawing.
- Frozen specimens can remain frozen up to 1 month in non-frost free freezers.

Before placing samples on the system ensure that:

- Samples are free of fibrin or other particulate matter.
- Samples are free of bubbles.

Reagents

UP

Store the reagents upright at 2–8°C.
Mix all primary reagent packs by hand before loading them onto the system. Visually inspect the bottom of the reagent pack to ensure that all particles are dispersed and resuspended. For detailed information about preparing the reagents for use, refer to Appendix C, *Handling Reagents*.

Reagent Pack	Reagent	Volume	Ingredients	Storage	Stability
ADVIA Centaur PHTN ReadyPack primary reagent pack	Lite Reagent	5.0 mL/ reagent pack	monoclonal mouse anti-phenytoin (~0.04 µg/mL) labeled with acridinium ester in buffer with sodium azide (< 0.1%) and preservatives	2–8°C	until the expiration date on the pack label. For onboard stability, refer to *Onboard Stability and Calibration Interval.*
	Solid Phase	20.0 mL/ reagent pack	phenytoin analog (~0.6 µg/mL) coupled to paramagnetic particles in buffer with sodium azide (< 0.1%) and preservatives	2–8°C	until the expiration date on the pack label. For onboard stability, refer to *Onboard Stability and Calibration Interval.*
ADVIA Centaur M-DIL 5 ReadyPack ancillary reagent pack	Multi-Diluent 5	5.0 mL/ reagent pack	human plasma with sodium azide (< 0.1%)	2–8°C	until the expiration date on the pack label or 28 consecutive days after accessing the ancillary reagent pack

NOTE: Sodium azide can react with copper and lead plumbing to form explosive metal azides. On disposal, flush reagents with a large volume of water to prevent the buildup of azides, if disposal into a drain is in compliance with federal, state, and local requirements.

CAUTION! POTENTIAL BIOHAZARD: Contains human source material. While each human serum or plasma donor unit used in the manufacture of this product was tested by FDA-approved methods and found nonreactive for hepatitis B surface antigen (HBsAg), antibody to hepatitis C (HCV), and antibody to HIV-1/2, all products manufactured using human source material should be handled as potentially infectious. Because no test method can offer complete assurance that hepatitis B or C viruses, HIV, or other infectious agents are absent, these products should be handled according to established good laboratory practices.[17-19]

CAUTION: This device contains material of animal origin and should be handled as a potential carrier and transmitter of disease.

For *in vitro* diagnostic use.

Loading Reagents

Ensure that the system has sufficient primary and ancillary reagent packs. For detailed information about preparing the system, refer to the system operating instructions or to the online help system.

347

Mix all primary reagent packs by hand before loading them onto the system. Visually inspect the bottom of the reagent pack to ensure that all particles are dispersed and resuspended. For detailed information about preparing the reagents for use, refer to Appendix C, *Handling Reagents*.

Load the ReadyPack reagent packs in the primary reagent area using the arrows as a placement guide. The system automatically mixes the primary reagent packs to maintain homogeneous suspension of the reagents. For detailed information about loading reagents, refer to the system operating instructions or to the online help system.

If automatic dilution of a sample is required, load ADVIA Centaur Multi-Diluent 5 in the ancillary reagent entry.

Onboard Stability and Calibration Interval

Onboard Stability	Calibration Interval
28 days	28 days

Additionally, the ADVIA Centaur Phenytoin assay requires a two-point calibration:

- when changing lot numbers of primary reagent packs
- when replacing system components
- when quality control results are repeatedly out of range

NOTE:

- Discard the primary reagent packs at the end of the onboard stability interval.
- Do not use reagents beyond the expiration date.

Master Curve Calibration

The ADVIA Centaur Phenytoin assay requires a Master Curve calibration when using a new lot number of Lite Reagent and Solid Phase. For each new lot number of Lite Reagent and Solid Phase, use the barcode reader or keyboard to enter the Master Curve values on the system. The Master Curve card contains the Master Curve values. For detailed information about entering calibration values, refer to the system operating instructions or to the online help system.

Quality Control

For detailed information about entering quality control values, refer to the system operating instructions or to the online help system.

To monitor system performance and chart trends, as a minimum requirement, two levels of quality control material should be assayed on each day that samples are analyzed. Quality control samples should also be assayed when performing a two-point calibration. Treat all quality control samples the same as patient samples.

Siemens Healthcare Diagnostics recommends the use of commercially available quality control materials with at least 2 levels (low and high). A satisfactory level of performance is achieved when the analyte values obtained are within the Acceptable Control Range for the system or within your range, as determined by an appropriate internal laboratory quality control scheme.

If the quality control results do not fall within the Expected Values or within the laboratory's established values, do not report results. Take the following actions:

- Verify that the materials are not expired.
- Verify that required maintenance was performed.
- Verify that the assay was performed according to the instructions for use.

348

- Rerun the assay with fresh quality control samples.
- If necessary, contact your local technical support provider or distributor for assistance.

Sample Volume

This assay requires 10 µL of sample for a single determination. This volume does not include the unusable volume in the sample container or the additional volume required when performing duplicates or other tests on the same sample. For detailed information about determining the minimum required volume, refer to *Sample Volume Requirements* in the *ADVIA Centaur Reference Manual.*

NOTE: The sample volume required to perform onboard dilution differs from the sample volume required to perform a single determination. Refer to the following information for the sample volume required to perform onboard dilutions:

Dilution	Sample Volume (µL)
1:2	100

Assay Procedure

For detailed procedural information, refer to the system operating instructions or to the online help system.

Procedural Notes

Calculations

For detailed information about how the system calculates results, refer to the system operating instructions or to the online help system.

The system reports phenytoin results in µg/mL (mass units) or µmol/L (SI units), depending on the units defined when setting up the assay. The conversion formula is 1 µg/mL = 3.96 µmol/L.

Dilutions

- Samples with phenytoin levels greater than 40 µg/mL (158.4 µmol/L) must be diluted and retested to obtain accurate results.
- Patient samples can be automatically diluted by the system or prepared manually.
- For automatic dilutions, ensure that ADVIA Centaur Multi-Diluent 5 is loaded and set the system parameters as follows:

  Dilution point: ≤ 40 µg/mL (158.4 µmol/L)

  Dilution factor: 2

  For detailed information about automatic dilutions, refer to the system operating instructions or to the online help system.
- Manually dilute the patient samples when patient results exceed the linearity of the assay using automatic dilution, or when laboratory protocol requires manual dilution.
- Use Multi-Diluent 5 to manually dilute patient samples, and then load the diluted sample in the sample rack, replacing the undiluted sample.
- Ensure that results are mathematically corrected for dilution. If a dilution factor is entered when scheduling the test, the system automatically calculates the result.

349

Disposal

Dispose of hazardous or biologically contaminated materials according to the practices of your institution. Discard all materials in a safe and acceptable manner, and in compliance with all federal, state, and local requirements.

Limitations

This assay has not been validated for newborn testing.

Heterophilic antibodies in human serum can react with reagent immunoglobulins, interfering with *in vitro* immunoassays.[20] Patients routinely exposed to animals or to animal serum products can be prone to this interference and anomalous values may be observed. Additional information may be required for diagnosis.

Serum specimens that are . . .	Demonstrate < 5% change in results up to . . .
hemolyzed	500 mg/dL of hemoglobin
lipemic	1000 mg/dL of triglycerides
icteric	20 mg/dL of bilirubin

Expected Results

A therapeutic range of 10 to 20 µg/mL (39.6 to 79.2 µmol/L) has been previously reported for phenytoin.[11-14]

Above 20 µg/mL (79.2 µmol/L), the frequency and severity of phenytoin toxicity increases in a dose-dependent manner. Patients with renal dysfunction have been reported to have an increased toxicity risk.[21] Samples from patients with renal dysfunction may yield spurious results in less specific phenytoin assays. The ADVIA Centaur Phenytoin assay has been developed to minimize this interference.

As with all therapeutic drug assays, each laboratory should determine the appropriateness of this range for the diagnostic evaluation of patient results.[22]

Performance Characteristics

Specificity

When a patient pool with phenytoin levels of approximately 15 µg/mL (59.4 µmol/L) was spiked with the following compounds, the cross-reactivity was less than or equal to 1% as determined by the following equation:[23, 24]

$$\% \text{ cross-reactivity} = \frac{\text{(concentration of spiked sample - concentration of unspiked sample)}}{\text{concentration of cross-reactant}} \times 100$$

Compound	Amount Added (µg/mL)	Compound	Amount Added (µg/mL)
2-Phenyl-2-ethylmalonamide (PEMA)	200	Glutethimide	60
5-ethyl-5-phenylhydantoin	100	HPPH	100
Amitriptyline	200	Imipramine	2.5
Amobarbital	100	Mephenytoin	250
Barbital	400	Methsuximide	100
Carbamazepine	120	Pentobarbital	100
Carbamazepine-10,11-epoxide	120	Phenobarbital	150

Compound	Amount Added (µg/mL)	Compound	Amount Added (µg/mL)
Chlorazepate	500	p-Hydroxyphenobarbital	200
Chlordiazepoxide	100	Primadone	100
Chlorpromazine	50	Promethazine	10
Diazepam	20	Secobarbital	50
Ethosuximide	300	Valproic acid	500
Ethotoin	250		

Sensitivity and Assay Range

The ADVIA Centaur Phenytoin assay measures phenytoin concentrations up to 40 µg/mL (158.4 µmol/L) with a minimum detectable concentration of 0.5 µg/mL (1.98 µmol/L). Analytical sensitivity is defined as the concentration of phenytoin that corresponds to the RLUs that are two standard deviations less than the mean RLUs of 20 replicate determinations of the Phenytoin zero standard.

Method Comparison

For 320 samples (from adult patients) in the range of 1.19 to 34.25 µg/mL (4.73 to 135.63 µmol/L), the relationship between the ADVIA Centaur Phenytoin assay and the ACS:180® Phenytoin assay is described by the equation:

ADVIA Centaur Phenytoin = 1.02 (ACS:180 Phenytoin) – 0.01 µg/mL

Correlation coefficient (r) = 0.99

Dilution Recovery

Five human serum samples in the range of 21.43 to 31.91 µg/mL (84.86 to 126.36 µmol/L) of phenytoin were diluted 1:2, 1:4, and 1:8 with Multi-Diluent 5 and assayed for recovery and parallelism. The recoveries ranged 99.9% to 108.6% with a mean of 103.6%.

Sample	Dilution	Observed (µg/mL)	Expected (µg/mL)	Observed (µmol/L)	Expected (µmol/L)	Recovery %
1	—	28.68		113.57		
	1:2	14.32	14.34	56.71	56.79	99.9
	1:4	7.22	7.17	28.59	28.39	100.7
	1:8	3.62	3.59	14.34	14.20	101.0
	Mean					100.5
2	—	28.95		114.64		
	1:2	15.20	14.48	60.19	57.32	105.0
	1:4	7.47	7.24	29.58	28.66	103.2
	1:8	3.75	3.62	14.85	14.33	103.6
	Mean					103.9
3	—	21.43		84.86		
	1:2	10.86	10.72	43.01	42.43	101.4
	1:4	5.48	5.36	21.70	21.22	102.3
	1:8	2.81	2.68	11.13	10.61	104.9
	Mean					102.8
4	—	31.91		126.36		
	1:2	16.32	15.96	64.63	63.18	102.3
	1:4	8.58	7.98	33.98	31.59	107.6
	1:8	4.33	3.99	17.15	15.80	108.6
	Mean					106.1

Sample	Dilution	Observed (µg/mL)	Expected (µg/mL)	Observed (µmol/L)	Expected (µmol/L)	Recovery %
5	—	26.76		105.97		
	1:2	14.32	13.38	56.71	52.98	107.0
	1:4	6.91	6.69	27.36	26.49	103.3
	1:8	3.44	3.35	13.62	13.25	102.8
	Mean					104.4
Mean						**103.6**

Spiking Recovery

Varying amounts of phenytoin were added to six serum samples with endogenous levels of phenytoin ranging from < 0.5 to 12.93 µg/mL (< 1.98 to 51.20 µmol/L). The recoveries ranged from 89.6% to 109.4% with a mean of 99.1%.

Sample	Amount Added (µg/mL)	Observed (µg/mL)	Amount Added (µmol/L)	Observed (µmol/L)	Recovery %
1	—	< 0.5	—	< 1.98	
	5.00	5.17	19.80	20.47	103.4
	10.00	10.27	39.60	40.67	102.7
	20.00	19.85	79.20	78.61	99.3
	30.00	30.38	118.80	120.30	101.3
	Mean				101.7
2	—	< 0.5	—	< 1.98	
	5.00	4.54	19.80	17.97	90.8
	10.00	9.78	39.60	38.73	97.8
	20.00	17.92	79.20	70.96	89.6
	30.00	29.12	118.80	115.32	97.1
	Mean				93.9
3	—	< 0.5	—	< 1.98	
	5.00	4.79	19.80	18.97	95.8
	10.00	9.69	39.60	38.37	96.9
	20.00	19.86	79.20	78.64	99.3
	30.00	28.93	118.80	114.56	96.4
	Mean				97.1
4	—	4.20	—	16.63	
	5.00	9.67	19.80	38.29	109.4
	10.00	13.94	39.60	55.20	97.4
	20.00	25.34	79.20	100.34	105.7
	Mean				104.2
5	—	6.81	—	26.97	
	5.00	11.94	19.80	47.28	102.6
	10.00	16.21	39.60	64.19	94.0
	20.00	27.37	79.20	108.38	102.8
	Mean				99.8
6	—	12.93	—	51.20	
	5.00	18.14	19.80	71.83	104.2
	10.00	22.00	39.60	87.12	90.7
	20.00	33.74	79.20	133.61	104.1
	Mean				99.7
Mean					**99.1**

Precision

Three samples were assayed 6 times in 12 assays, on each of 6 systems (n = 72 for each sample), over a period of 5 days. The following results were obtained:

Mean (µg/mL)	Mean (µmol/L)	Within-run % CV	Run-to-run % CV	Total % CV
4.57	18.10	3.97	2.85	4.89
15.05	59.60	2.63	2.42	3.57
22.28	88.23	2.64	2.37	3.55

Traceability of Standardization

The ADVIA Centaur Phenytoin assay is traceable to an internal standard manufactured using highly purified material. Standard reference materials (SRM 900) from NIST (National Institute of Standards and Technology) was evaluated and found to recover on average 100% of target concentration. Assigned values for calibrators are traceable to this standardization.

Technical Assistance

For customer support, contact your local technical support provider or distributor.

www.siemens.com/diagnostics

References

1. Buchthal F, Lennox-Buchthal MA. Diphenylhydantoin: relation of anticonvulsant effect to concentration in serum. In: Woodbury DM, Penry JK, eds. Antiepileptic Drugs. New York: Raven Press, 1972;193–209.
2. Bekele G, Abebe Y, T'Haimanot R. Plasma level distribution, effect and toxicity of anti-epileptic drugs among Ethiopian epileptics. Ethiop Med J 1990;28:23–30.
3. Finn AL, Olanow CW. Phenytoin: therapeutic use and serum concentration monitoring. In: Taylor WJ, Finn AL, eds. Individualizing Drug Therapy: Practical Application of Drug Monitoring, Vol 2. New York: Gross, Townsend, Frank, Inc., 1981;63–85.
4. Porter RJ, Layzer RB. Plasma albumin concentration and diphenylhydantoin binding in man. Arch of Neurol 1975;32:298–303.
5. Rivello JJ, Roe EJ, Epin JI, et al. Timing of maintenance phenytoin therapy after intravenous loading dose. Pediatr Neurol 1991;7(4):262–265.
6. Donovan PJ, Cline D. Phenytoin administration by constant intravenous infusion: selective rates of administration. Ann Emerg Med 1991;20:139–142.
7. Penry JK, Newmark ME. The use of antiepileptic drugs. Ann Intern Med 1979;90:207–18.
8. Stilman N, Masdeu JC. Incidence of seizures with phenytoin toxicity. Neurology 1985;35:1769–1772.
9. Kutt H, Winters W, Kokenge R, McDowell F. Diphenylhydantoin, metabolism, blood levels and toxicity. Arch of Neurol 1964;11:642–8.
10. Naidu S, Moodley J, Botha J. et al. The efficacy of phenytoin in relation to serum levels in severe pre-eclampsia and eclampsia. Br J Obstet Gynaecol 1992;99:881–886.
11. Buchthal F, Svensmark O. Serum concentrations of diphenylhydantoin (phenytoin) and phenobarbital and their relation to therapeutic and toxic effects. Pschiatr Neurol Neurochir 1971;74:117–36.
12. Kutt H. Diphenylhydantoin: relation of plasma levels to clinical control. In: Woodbury DM, Penry JK, eds. Antiepileptic Drugs. New York: Raven Press, 1972;211–8.
13. Naglo A-S, NergÂrdh A, BorÈus LO. Monitoring of phenytoin in epileptic children: value of the single morning sample. J Neurol 1990;237:186–190.
14. Tomson T, Lindbom U, Ekqvist B, et al. Epilepsy and pregnancy: a prospective study of seizure control in relation to free and total plasma concentrations of carbamazepine and phenytoin. Epilepsia 1994;35(1):122–130.
15. Reagent Water Technical Bulletin. Siemens Healthcare Diagnostics, 107060.
16. Clinical and Laboratory Standards Institute (formerly NCCLS). *Procedures for the Handling and Processing of Blood Specimens; Approved Guideline - Third Edition.* Wayne, PA: Clinical and Laboratory Standards Institute; 2004. NCCLS Document H18-A3.
17. Clinical and Laboratory Standards Institute (formerly NCCLS). *Protection of Laboratory Workers From Occupationally Acquired Infections; Approved Guideline - Third Edition.* Wayne, PA: Clinical and Laboratory Standards Institute; 2005. CLSI Document M29-A3.

18. Centers for Disease Control. 1988. Update:Universal precautions for prevention of transmission of human immunodeficiency virus, hepatitis B virus and other bloodborne pathogens in healthcare settings. MMWR 37:377-82, 387-8.
19. Federal Occupational Safety and Health Administration. Bloodborne Pathogens Standard. 29 CFR 1910.1030.
20. Boscato LM, Stuart MC. Heterophilic antibodies: a problem for all immunoassays. Clin Chem 1988;34:27–33.
21. Hyman GA, Sommers SC. The Development of Hodgkins Disease and Lymphoma During Anticonvulsant Therapy. Blood 1966;28:416–427
22. Clinical and Laboratory Standards Institute (formerly NCCLS). *How to Define and Determine Reference Intervals in the Clinical Laboratory; Approved Guideline - Second Edition.* Wayne, PA: Clinical and Laboratory Standards Institute; 2000. NCCLS Document C28-A2.
23. Clinical and Laboratory Standards Institute (formerly NCCLS). *Interference Testing in Clinical Chemistry; Approved Guideline - Second Edition.* Wayne, PA: Clinical and Laboratory Standards Institute; 2005. CLSI document EP7-A2.
24. Holmes EW, Wyngaarden JB. In: Scriver, Beaudet, Sly, Valle, editors. The Metabolic Basis of Inherited Disease I, NY: McGraw Hill, 1989;1089.

ADVIA Centaur, ReadyPack, and ACS:180 are trademarks of Siemens Healthcare Diagnostics.

© 2008 Siemens Healthcare Diagnostics Inc. All rights reserved.

US Pats 5,110,932; 5,609,822; 5,788,928

Origin: US

Siemens Healthcare Diagnostics Inc.
Tarrytown, NY 10591-5097 USA

EC REP Siemens Healthcare Diagnostics Ltd.
Sir William Siemens Sq.
Frimley, Camberley, UK GU16 8QD

Siemens Healthcare
Diagnostics Pty Ltd
885 Mountain Highway
Bayswater Victoria 3153
Australia

シーメンスヘルスケア・
ダイアグノスティクス株式会社
東京都品川区東五反田 3－20－14
Siemens Healthcare Diagnostics
輸入

Progesterone (PRGE)

CE

Assay Summary

Sample Type	*Serum*
Sample Volume	*20 µL*
Calibrator	*E*
Sensitivity and Assay Range	*0.21–60 ng/mL (0.67–190.8 nmol/L)*

Contents

REF	Contents	Number of Tests
01586287 (125362)	5 ReadyPack® primary reagent packss containing ADVIA Centaur® PRGE Lite Reagent and Solid Phase 5 ReadyPack ancillary reagent packs containing ADVIA Centaur PRGE Releasing Agent PRGE [REL] ADVIA Centaur PRGE Master Curve card	250
or		
02382928 (118530)	1 ReadyPack primary reagent pack containing ADVIA Centaur PRGE Lite Reagent and Solid Phase 1 ReadyPack ancillary reagent pack containing ADVIA Centaur PRGE Releasing Agent PRGE [REL] ADVIA Centaur PRGE Master Curve card	50

For a definition of symbols used in product labeling, refer to *Understanding the Symbols* in Appendix D of the Assay Guide.

Intended Use

For *in vitro* diagnostic use in the quantitative determination of progesterone in serum using the ADVIA Centaur and ADVIA Centaur XP systems.

Materials Required but Not Provided

REF	Description	Contents
04634762	Calibrator E	6 vials of low calibrator [CAL L] 6 vials of high calibrator [CAL H]
or		
04634452	Calibrator E	2 vials of low calibrator [CAL L] 2 vials of high calibrator [CAL H]
03395373	Ancillary Probe Wash 1 [APW 1]	2 ReadyPack ancillary reagent packs containing 25 mL per pack

Optional Reagents

REF	Description	Contents
05389133 (110315)	ADVIA Centaur Multi-Diluent 3 [M-DIL 3]	2 ReadyPack ancillary reagent packs containing 5 mL/pack
06223468 (672192)	Multi-Diluent 3 [M-DIL 3]	50 mL/vial
118675	PRGE Master Curve Material	10 x 1 mL

Summary and Explanation of the Test

Progesterone, in conjunction with estrogens, regulates reproductive tract functions during the menstrual cycle. Progesterone is critical in preparing the endometrium for blastocyst implantation and the maintenance of pregnancy. The major sources of progesterone are the corpus luteum and the placenta in women. Minor sources of progesterone are the adrenal cortex in men and women, and the testes in men.

Progesterone levels are low during the follicular phase of the menstrual cycle. After ovulation, progesterone production by the corpus luteum increases rapidly, reaching a maximum concentration 4 to 7 days after ovulation. These levels are maintained for 4 to 6 days then fall to baseline levels, inducing menstruation.[1,2] During pregnancy, progesterone levels rise steadily to their highest levels in the third trimester. Clinical evaluation of progesterone confirms ovulation and normal luteal function in nonpregnant women. Inadequate progesterone production by the corpus luteum may indicate luteal phase deficiency (LPD), which is associated with infertility and early miscarriage.[3,4]

Women using oral contraceptives have suppressed progesterone levels.[5]

Assay Principle

The ADVIA Centaur Progesterone assay is a competitive immunoassay using direct chemiluminescent technology. Progesterone in the patient sample binds to an acridinium ester-labeled mouse monoclonal anti-progesterone antibody in the Lite Reagent. Unbound antibody binds to a progesterone derivative, covalently coupled to paramagnetic particles in the Solid Phase.

The system automatically performs the following actions:

- Dispenses 20 µL of sample and 90 µL of Releasing Agent into a cuvette.
- Dispenses 100 µL of Lite Reagent and incubates for 2.5 minutes at 37°C.
- Dispenses 200 µL of Solid Phase and incubates for 5.0 minutes at 37°C.
- Separates, aspirates, and washes the cuvettes with reagent water.[6]
- Dispenses 300 µL each of Acid Reagent and Base Reagent to initiate the chemiluminescent reaction.
- Reports results according to the selected option, as described in the system operating instructions or in the online help system.

An inverse relationship exists between the amount of progesterone present in the patient sample and the amount of relative light units (RLUs) detected by the system.

Specimen Collection and Handling

Serum is the recommended sample type for this assay.

Studies suggest that storing progesterone samples in separator tubes (SST) can affect progesterone results.[7] Progesterone samples collected in SST tubes should be tested within 24 hours when using the ADVIA Centaur Progesterone assay.

The following recommendations for handling and storing blood samples are furnished by the Clinical and Laboratory Standards Institute (CLSI, formerly NCCLS):[8]

- Collect all blood samples observing universal precautions for venipuncture.
- Allow samples to clot adequately before centrifugation.
- Keep tubes stoppered and upright at all times.
- Do not use samples that have been stored at room temperature for longer than 8 hours.

- Tightly cap and refrigerate specimens at 2° to 8°C if the assay is not completed within 8 hours.
- Freeze samples at or below -20°C if the sample is not assayed within 48 hours.
- Freeze samples only once and mix thoroughly after thawing.

Before placing samples on the system, ensure that samples have the following characteristics:

- Samples are free of fibrin or other particulate matter.
- Samples are free of bubbles.

Reagents

UP

Store the reagents upright at 2–8°C.
Mix all primary reagent packs by hand before loading them onto the system. Visually inspect the bottom of the reagent pack to ensure that all particles are dispersed and resuspended. For detailed information about preparing the reagents for use, refer to Appendix C, *Handling Reagents*.

Reagent Pack	Reagent	Volume	Ingredients	Storage	Stability
ADVIA Centaur PRGE ReadyPack primary reagent pack	Lite Reagent	5.0 mL/ reagent pack	monoclonal mouse anti-progesterone antibody (~20 ng/mL) labeled with acridinium ester in buffered saline with sodium azide (0.1%) and preservatives	2–8°C	Until the expiration date on the pack label. For onboard stability, refer to *Onboard Stability and Calibration Interval.*
	Solid Phase	10.0 mL/ reagent pack	progesterone derivative (~60 ng/mL) covalently coupled to paramagnetic particles in phosphate buffer with sodium azide (0.11%) and preservatives	2–8°C	Until the expiration date on the pack label. For onboard stability, refer to *Onboard Stability and Calibration Interval.*
ADVIA Centaur PRGE REL ReadyPack ancillary reagent pack	Releasing Agent	5.0 mL/ reagent pack	steroid releasing agent (2.2 µg/mL) in buffered saline with sodium azide (0.1%) and preservatives	2–8°C	Until the expiration date on the pack label. For onboard stability, refer to *Onboard Stability and Calibration Interval.*
ADVIA Centaur M-DIL 3 ReadyPack ancillary reagent pack	Multi-Diluent 3	5.0 mL/ reagent pack	human plasma with sodium azide (0.1%)	2–8°C	Until the expiration date on the pack label or 28 consecutive days after accessing the ancillary reagent pack.
ADVIA Centaur APW 1 ReadyPack ancillary reagent pack*	Probe Wash	25.0 mL/ reagent pack	0.4 N sodium hydroxide	2–8°C	Until the expiration date on the pack label or 14 consecutive days after accessing the ancillary reagent pack.

R22 S28 **Harmful!** Harmful if swallowed. After contact with skin, wash immediately with plenty of soap and water. **Contains:** sodium azide; Lite Reagent, Solid Phase, Releasing Agent

CAUTION! POTENTIAL BIOHAZARD: Contains human source material. While each human serum or plasma donor unit used in the manufacture of this product was tested by FDA-approved methods and found nonreactive for hepatitis B surface antigen (HBsAg), antibody to hepatitis C (HCV), and antibody to HIV-1/2, all products manufactured using human source material should be handled as potentially infectious. Because no test method can offer complete assurance that hepatitis B or C viruses, HIV, or other infectious agents are absent, these products should be handled according to established good laboratory practices.[9-11]

CAUTION: This device contains material of animal origin and should be handled as a potential carrier and transmitter of disease.

NOTE: Sodium azide can react with copper and lead plumbing to form explosive metal azides. On disposal, flush reagents with a large volume of water to prevent the buildup of azides, if disposal into a drain is in compliance with federal, state, and local requirements.

For *in vitro* diagnostic use.

Loading Reagents

Ensure that the system has sufficient primary and ancillary reagent packs. For detailed information about preparing the system, refer to the system operating instructions or to the online help system.

CAUTION: Mix all primary reagent packs by hand before loading them onto the system. Visually inspect the bottom of the reagent pack to ensure that all particles are dispersed and resuspended. For detailed information about preparing the reagents for use, refer to Appendix C, *Handling Reagents*.

Load the ReadyPack reagent packs in the primary reagent area using the arrows as a placement guide. The system automatically mixes the primary reagent packs to maintain homogeneous suspension of the reagents. Load the Progesterone Releasing Agent ReadyPack reagent pack in the ancillary reagent entry. For detailed information about loading reagents, refer to the system operating instructions or to the online help system.

If automatic dilution of a sample is required, load ADVIA Centaur Multi-Diluent 3 in the ancillary reagent entry.

CAUTION: The Progesterone Releasing Agent provided in this kit is matched to the Solid Phase and Lite Reagent. Do not mix Progesterone Releasing Agent lots with different lots of Solid Phase and Lite Reagent.

Onboard Stability and Calibration Interval

Onboard Stability	Calibration Interval
28 days	28 days

Additionally, the ADVIA Centaur Progesterone assay requires a two-point calibration:

- when changing lot numbers of primary reagent packs
- when replacing system components
- when quality control results are repeatedly out of range

CAUTION:

- Discard the primary and ancillary reagent packs at the end of the onboard stability interval.
- Do not use reagents beyond the expiration date.

Master Curve Calibration

The ADVIA Centaur Progesterone assay requires a Master Curve calibration when using a new lot number of Lite Reagent and Solid Phase. For each new lot number of Lite Reagent and Solid Phase, use the barcode reader or keyboard to enter the Master Curve values on the system. The Master Curve card contains the Master Curve values. For detailed information about entering calibration values, refer to the system operating instructions or to the online help system.

Quality Control

For detailed information about entering quality control values, refer to the system operating instructions or to the online help system.

To monitor system performance and chart trends, as a minimum requirement, two levels of quality control material should be assayed on each day that samples are analyzed. Quality control samples should also be assayed when performing a two-point calibration. Treat all quality control samples the same as patient samples.

Siemens Healthcare Diagnostics recommends the use of commercially available quality control materials with at least 2 levels (low and high). A satisfactory level of performance is achieved when the analyte values obtained are within the Acceptable Control Range for the system or within your range, as determined by an appropriate internal laboratory quality control scheme.

If the quality control results do not fall within the Expected Values or within the laboratory's established values, do not report results. Take the following actions:

- Verify that the materials are not expired.
- Verify that required maintenance was performed.
- Verify that the assay was performed according to the instructions for use.
- Rerun the assay with fresh quality control samples.
- If necessary, contact your local technical support provider or distributor for assistance.

Sample Volume

This assay requires 20 µL of sample for a single determination. This volume does not include the unusable volume in the sample container or the additional volume required when performing duplicates or other tests on the same sample. For detailed information about determining the minimum required volume, refer to *Sample Volume Requirements* in the *ADVIA Centaur Reference Manual.*

NOTE: The sample volume required to perform onboard dilution differs from the sample volume required to perform a single determination. Refer to the following information for the sample volume required to perform onboard dilutions:

Dilution	Sample Volume (µL)
1:5, 1:10	40

Assay Procedure

For detailed procedural information, refer to the system operating instructions or to the online help system.

Procedural Notes

Calculations

For detailed information about how the system calculates results, refer to the system operating instructions or to the online help system.

The system reports serum progesterone results in ng/mL (common units) or nmol/L (SI units), depending on the units defined when setting up the assay. The conversion formula is 1 ng/mL = 3.18 nmol/L.

Dilutions

The following information pertains to dilutions:

- Serum samples with progesterone levels greater than 60 ng/mL (190.8 nmol/L) must be diluted and retested to obtain accurate results.
- Patient samples can be automatically diluted by the system or prepared manually.

- For automatic dilutions, ensure that ADVIA Centaur Multi-Diluent 3 is loaded and set the system parameters as follows:

  Dilution point: ≤ 60 ng/mL (190.8 nmol/L)

  Dilution factor: 5, 10

  For detailed information about automatic dilutions, refer to the system operating instructions or to the online help system.
- Manually dilute the patient samples when patient results exceed the linearity of the assay using automatic dilution, or when laboratory protocol requires manual dilution.
- Use Multi-Diluent 3 to manually dilute patient samples, and then load the diluted sample in the sample rack, replacing the undiluted sample.
- Ensure that results are mathematically corrected for dilution. If a dilution factor is entered when scheduling the test, the system automatically calculates the result.

Disposal

Dispose of hazardous or biologically contaminated materials according to the practices of your institution. Discard all materials in a safe and acceptable manner, and in compliance with all federal, state, and local requirements.

Limitations

Heterophilic antibodies in human serum can react with reagent immunoglobulins, interfering with *in vitro* immunoassays.[12] Patients routinely exposed to animals or to animal serum products can be prone to this interference and anomalous values may be observed. Additional information may be required for diagnosis.

Serum specimens that are . . .	Have a ≤ 15% effect on the assay up to . . .
lipemic	500 mg/dL of triglicerides
hemolyzed	250 mg/dL of hemoglobin
icteric	20 mg/dL of bilirubin

Expected Results

The expected results for the ACS:180® Progesterone assay were previously established. Data was obtained on serum samples from 307 apparently healthy individuals. Based on a central 95% interval, the following reference ranges were established:

Sample Category	N	Median (ng/mL)	Range (ng/mL)	Median (nmol/L)	Range (nmol/L)
Males	80	0.54	0.28–1.22	1.72	0.89–3.88
Normal females					
follicular phase	47	0.43	ND*–1.40	1.37	ND–4.45
luteal phase	84	12.74	3.34–25.56	40.51	10.62–81.28
mid luteal phase	50	14.82	4.44–28.03	47.13	14.12–89.14
Postmenopausal females	46	0.27	ND–0.73	0.86	ND–2.32

* ND = Not Detectable.

These results were confirmed for the ADVIA Centaur Progesterone assay by analyzing 230 samples in the range of ND to 53.7 ng/mL (ND to 169.2 nmol/L). Refer to *Method Comparison.*

360

In a separate study, progesterone ranges were determined from 118 females in the three trimesters of pregnancy. The observed ranges are shown in the following table:

Sample Category	N	Median (ng/mL)	Range (ng/mL)	Median (nmol/L)	Range (nmol/L)
Pregnant females					
first trimester	40	21.85	11.22–90.00	69.48	35.68–286.2
second trimester	50	41.02	25.55–89.40	130.44	81.25–284.29
third trimester	28	155.00	48.40–422.50	492.90	153.91–1343.55

As with all *in vitro* diagnostic assays, each laboratory should determine its own reference range(s) for the diagnostic evaluation of patient results.[13]

Performance Characteristics

Specificity

The ADVIA Centaur Progesterone assay shows high specificity for progesterone. The following compounds were spiked into Multi-Diluent 3, and the apparent progesterone value was determined. The percent cross-reactivity is the apparent result compared to the amount added.

Compound	Amount Added (ng/mL)	% Cross-reactivity
Cortisol	1000	ND*
11-deoxycorticosterone	1000	0.08
Corticosterone	1000	0.95
Testosterone	1000	ND
Aldosterone	1000	ND
Pregnenolone	1000	0.46
Androstenediol	1000	ND
17α-hydroxyprogesterone	1000	0.31
11-deoxycortisol	1000	ND
Danazol	10,000	ND
Prednisolone	1000	ND
17β-Estradiol	100	ND
Estrone	100	ND
Estriol	100	ND
Clomiphene	100	ND
Bromocryptine	100	ND

* ND = Not Detectable.

Interference testing was determined according to CLSI Document EP7-A2.[14]

Sensitivity and Assay Range

The ADVIA Centaur Progesterone assay measures progesterone concentrations up to 60 ng/mL (190.8 nmol/L) with a minimum detectable concentration (analytical sensitivity) of 0.21 ng/mL (0.67 nmol/L). Analytical sensitivity is defined as the concentration of progesterone that corresponds to the RLUs that are two standard deviations less than the mean RLUs of 24 replicate determinations of the Progesterone zero standard.

Method Comparison

For 230 samples in the range of ND to 53.7 ng/mL (ND to 169.2 nmol/L), the relationship between the ADVIA Centaur Progesterone assay and the ACS:180 Progesterone assay is described by the equation:

ADVIA Centaur Progesterone = 0.97 (ACS:180 Progesterone) - 0.12 ng/mL

Correlation coefficient (r) = 0.99

361

Dilution Recovery

Four human serum samples in the range of 39.0 to 50.8 ng/mL (124.0 to 161.5 nmol/L) of progesterone were diluted 1:2, 1:4, 1:8, and 1:16 with Multi-Diluent 3 and assayed for recovery and parallelism. The recoveries ranged from 97.9 to 118% with a mean of 104%.

Sample	Dilution	Observed (ng/mL)	Expected (ng/mL)	Observed (nmol/L)	Expected (nmol/L)	Recovery %
1	—	48.8		155.2		
	1:2	24.9	24.4	79.2	77.6	102
	1:4	11.9	12.2	37.8	38.8	97.9
	1:8	6.1	6.1	19.5	19.4	101
	1:16	3.1	3.1	10.0	9.7	103
	Mean					101
2	—	39.7		126.2		
	1:2	19.7	19.9	62.6	63.3	99.2
	1:4	10.2	9.94	32.4	31.6	102
	1:8	5.2	5.0	16.7	15.8	106
	1:16	2.8	2.5	8.8	7.9	112
	Mean					105
3	—	39.0		124.0		
	1:2	19.9	19.5	63.3	62.0	102
	1:4	10.3	9.76	32.8	31.0	106
	1:8	5.4	4.9	17.1	15.5	110
	1:16	2.9	2.4	9.2	7.8	118
	Mean					109
4	—	50.8		161.5		
	1:2	25.9	25.4	82.4	80.8	102
	1:4	12.5	12.7	39.8	40.4	98.8
	1:8	6.6	6.4	20.9	20.2	103
	1:16	3.2	3.2	10.3	10.1	102
	Mean					101
Mean						**104**

Spiking Recovery

Varying amounts of progesterone were added to five samples with endogenous progesterone levels of 0.53 to 3.83 ng/mL (1.69 to 12.2 nmol/L). The recoveries ranged from 76 to 109% with a mean of 94%.

Sample	Amount Added (ng/mL)	Observed (ng/mL)	Amount Added (nmol/L)	Observed (nmol/L)	Recovery %
1	—	0.53	—	1.69	
	5.0	4.98	15.9	15.8	89
	15.0	14.8	47.7	47.1	95
	35.0	35.2	111.3	111.9	99
	Mean				94
2	—	3.83	—	12.2	
	5.0	8.50	15.9	27.0	94
	15.0	18.8	47.7	59.8	100
	35.0	37.6	111.3	119.6	97
	Mean				97

Sample	Amount Added (ng/mL)	Observed (ng/mL)	Amount Added (nmol/L)	Observed (nmol/L)	Recovery %
3	—	1.14	—	3.63	
	5.0	5.10	15.9	16.2	79
	15.0	15.0	47.7	47.7	93
	35.0	34.6	111.3	110.0	96
	Mean				89
4	—	0.55	—	1.75	
	5.0	5.99	15.9	19.0	109
	15.0	14.9	47.7	47.4	96
	35.0	32.8	111.3	104.3	92
	Mean				99
5	—	3.10	—	9.9	
	5.0	6.90	15.9	21.9	76
	15.0	17.2	47.7	54.7	94
	35.0	36.7	111.3	116.7	96
	Mean				89
Mean					**94**

Precision

Six samples were assayed 6 times, in each of 10 runs, on 3 systems over a period of 3 days. The following results were obtained:

Mean (ng/mL)	Mean (nmol/L)	Within-run % CV	Run-to-run % CV	Total % CV
1.2	3.8	12.4	2.6	12.7
1.5	4.8	7.2	5.7	9.2
7.2	22.9	3.7	3.9	5.4
11.9	37.8	2.5	3.1	3.9
20.9	66.5	3.2	1.9	3.7
48.7	154.9	2.5	4.2	4.8

Standardization

The ADVIA Centaur Progesterone assay is standardized using internal standards manufactured analytically which are traceable to gas chromatography–mass spectroscopy (GCMS). The following equation describes the relationship between the progesterone standards and GCMS analysis throughout the range of the assay.

$$\text{ADVIA Centaur Progesterone} = 1.10\ (\text{GCMS}) + 0.09\ \text{ng/mL},\ r = 0.99$$

Assigned values for calibrators are traceable to this standardization.

Technical Assistance

For customer support, contact your local technical support provider or distributor.

www.siemens.com/diagnostics

References

1. Chattoraj SC, Watts NB. *Endocrinology.* In: Tietz NW, editor. Fundamentals of clinical chemistry. Philadelphia: WB Saunders, 1987. p.575.
2. Filicori M, Butler JP, Crowley WF Jr. Neuroendocrine regulation of the corpus luteum in the human. *J Clin Invest* 1984;73:1638–47.
3. Goldstein D, Zuckerman H, Harpaz S, et al. Correlation between estradiol and progesterone in cycles with luteal phase deficiency. *Fertil Steril* 1982;37(3):348–54.

4. Mais V, Cetel NS, Muse KN, et al. Hormonal dynamics during luteal-follicular transition. *J Clin Endocrinol Metab* 1987;64:1109–14.
5. Henzel MR. Contraceptive hormones and their clinical use. In: Yen SSC, Jaffe RB, editors. Reproductive endocrinology. Philadelphia: WB Saunders, 1991. p.814.
6. Reagent Water Technical Bulletin. Siemens Healthcare Diagnostics, 107060.
7. Wild D. Laboratory Management, The Immunoassay Handbook, Stockton Press. 1994.
8. Clinical and Laboratory Standards Institute (formerly NCCLS). *Procedures for the Handling and Processing of Blood Specimens; Approved Guideline - Third Edition.* Wayne, PA: Clinical and Laboratory Standards Institute; 2004. NCCLS Document H18-A3.
9. Centers for Disease Control. Update: Universal precautions for prevention of transmission of human immunodeficiency virus, hepatitis B virus and other bloodborne pathogens in healthcare settings. MMWR, 1988;37:377–82, 387–8.
10. Clinical and Laboratory Standards Institute (formerly NCCLS). *Protection of Laboratory Workers From Occupationally Acquired Infections; Approved Guideline - Third Edition.* Wayne, PA: Clinical and Laboratory Standards Institute; 2005. NCCLS Document M29-A3.
11. Federal Occupational Safety and Health Administration. Bloodborne Pathogens Standard. 29 CFR 1910.1030.
12. Boscato LM, Stuart MC. Heterophilic antibodies: a problem for all immunoassays. *Clin Chem* 1988;34:27–33.
13. Clinical and Laboratory Standards Institute (formerly NCCLS). *How to Define and Determine Reference Intervals in the Clinical Laboratory; Approved Guideline - Second Edition.* Wayne, PA: Clinical and Laboratory Standards Institute; 2000. NCCLS Document C28-A2.
14. Clinical and Laboratory Standards Institute (formerly NCCLS). *Interference Testing in Clinical Chemistry; Approved Guideline - Second Edition.* Wayne, PA: Clinical and Laboratory Standards Institute; 2005. NCCLS document EP7-A2.

ADVIA Centaur, ReadyPack, and ACS:180 are trademarks of Siemens Healthcare Diagnostics.

© 2008 Siemens Healthcare Diagnostics. All rights reserved.

US Pats 5,110,932; 5,609,822; 5,788,928

Origin: US

Siemens Healthcare Diagnostics Inc.
Tarrytown, NY 10591-5097 USA

EC REP **Siemens Healthcare Diagnostics Ltd.**
Sir William Siemens Sq.
Frimley, Camberley, UK GU16 8QD

Siemens Healthcare
Diagnostics Pty Ltd
885 Mountain Highway
Bayswater Victoria 3153
Australia

シーメンスヘルスケア・
ダイアグノスティクス株式会社
東京都品川区東五反田3－20－14
Siemens Healthcare Diagnostics
輸入

Prolactin (PRL)

CE

Assay Summary

Sample Type	**Serum**
Sample Volume	**25 µL**
Calibrator	**B**
Sensitivity and Assay Range	**0.3 – 200 ng/mL (6.4 – 4240 µIU/mL)**

Contents

REF	Contents	Number of Tests
09505871 (110758)	5 ReadyPack® primary reagent packs containing ADVIA Centaur® PRL Lite Reagent and Solid Phase ADVIA Centaur PRL Master Curve card	250
or		
03278474 (110757)	1 ReadyPack primary reagent pack containing ADVIA Centaur PRL Lite Reagent and Solid Phase ADVIA Centaur PRL Master Curve card	50

For a definition of symbols used in product labeling, please refer to *Understanding the Symbols* in Appendix D.

Intended Use

For *in vitro* diagnostic use in the quantitative determination of prolactin in serum using the ADVIA Centaur and ADVIA Centaur XP systems.

Materials Required But Not Provided

REF	Description	Contents
00652707	Calibrator B	6 vials of low calibrator CAL L 6 vials of high calibrator CAL H
or		
00649625	Calibrator B	2 vials of low calibrator CAL L 2 vials of high calibrator CAL H

Optional Reagents

REF	Description	Contents
07907174 (110313)	ADVIA Centaur Multi-Diluent 1 M-DIL 1	6 ReadyPack ancillary reagent packs containing 25 mL/pack
or		
07293184 (110312)	ADVIA Centaur Multi-Diluent 1 M-DIL 1	2 ReadyPack ancillary reagent packs containing 25 mL/pack
09348792 (672177)	Multi-Diluent 1 M-DIL 1	50 mL/vial
672430	PRL Master Curve Material	10 x 1 mL

Summary and Explanation of the Test

Prolactin is a single-chain polypeptide hormone secreted by the anterior pituitary[1] under the control of prolactin-inhibiting factors and prolactin-releasing factors. These inhibiting and releasing factors are secreted by the hypothalamus.[2] Prolactin is also synthesized by the placenta and is present in amniotic fluid.

Prolactin initiates and maintains lactation in females.[3] It also plays a role in regulating gonadal function in both males and females. In adults, basal circulating prolactin is present in concentrations up to 30 ng/mL (636 µIU/mL). During pregnancy and postpartum lactation, serum prolactin can increase 10- to 20-fold. Exercise, stress, and sleep also cause transient increases in prolactin levels.

Consistently elevated serum prolactin levels greater than 30 ng/mL (636 µIU/mL) in the absence of pregnancy and postpartum lactation are indicative of hyperprolactinemia, which is the most common hypothalamic-pituitary dysfunction encountered in clinical endocrinology. Hyperprolactinemia often results in galactorrhea, amenorrhea, and infertility in females, and in impotence and hypogonadism in males.[4] Renal failure, hypothyroidism, and prolactin-secreting pituitary adenomas are also common causes of abnormally elevated prolactin levels.[1,5,6]

Assay Principle

The ADVIA Centaur Prolactin assay is a two-site sandwich immunoassay using direct chemiluminometric technology, which uses constant amounts of two antibodies. The first antibody, in the Lite Reagent, is a polyclonal goat anti-prolactin antibody labeled with acridinium ester. The second antibody, in the Solid Phase, is a monoclonal mouse anti-prolactin antibody, which is covalently coupled to paramagnetic particles.

The system automatically performs the following steps:

- dispenses 25 µL of sample into a cuvette
- dispenses 100 µL of Lite Reagent and incubates for 5.0 minutes at 37°C
- dispenses 450 µL of Solid Phase and incubates for 2.5 minutes at 37°C
- separates, aspirates, and washes the cuvettes with reagent water[7]
- dispenses 300 µL each of Acid Reagent and Base Reagent to initiate the chemiluminescent reaction
- reports results according to the selected option, as described in the system operating instructions or in the online help system

A direct relationship exists between the amount of prolactin present in the patient sample and the amount of relative light units (RLUs) detected by the system.

Specimen Collection and Handling

Serum is the recommended sample type for this assay.

The following recommendations for handling and storing blood samples are furnished by the Clinical and Laboratory Standards Institute (CLSI, formerly NCCLS):[8]

- Collect all blood samples observing universal precautions for venipuncture.
- Allow samples to clot adequately before centrifugation.
- Keep tubes stoppered and upright at all times.
- Do not use samples that have been stored at room temperature for longer than 8 hours.
- Tightly cap and refrigerate specimens at 2 to 8°C if the assay is not completed within 8 hours.
- Freeze samples at or below -20°C if the sample is not assayed within 48 hours.
- Freeze samples only once and mix thoroughly after thawing.

Before placing samples on the system ensure that:

- Samples are free of fibrin or other particulate matter.
- Samples are free of bubbles.

366

Reagents

Store the reagents upright at 2–8°C.
Mix all primary reagent packs by hand before loading them onto the system. Visually inspect the bottom of the reagent pack to ensure that all particles are dispersed and resuspended. For detailed information about preparing the reagents for use, refer to Appendix C, *Handling Reagents*.

Reagent Pack	Reagent	Volume	Ingredients	Storage	Stability
ADVIA Centaur PRL ReadyPack primary reagent pack	Lite Reagent	5.0 mL/ reagent pack	polyclonal goat anti-prolactin antibody (~0.16 µg/mL) labeled with acridinium ester in buffer with sodium azide (0.11%) and preservatives	2–8°C	until the expiration date on the pack label. For onboard stability, refer to *Onboard Stability and Calibration Interval.*
	Solid Phase	22.5 mL/ reagent pack	monoclonal mouse anti-prolactin antibody (~3.67 µg/mL) covalently coupled to paramagnetic particles in buffer with protein stabilizers, sodium azide (0.11%), and preservatives	2–8°C	until the expiration date on the pack label. For onboard stability, refer to *Onboard Stability and Calibration Interval.*
ADVIA Centaur M-DIL 1 ReadyPack ancillary reagent pack	Multi-Diluent 1	25.0 mL/ reagent pack	equine serum with sodium azide (0.1%) and preservatives	2–8°C	until the expiration date on the pack label or 28 consecutive days after accessing the ancillary reagent pack

NOTE: Sodium azide can react with copper and lead plumbing to form explosive metal azides. On disposal, flush reagents with a large volume of water to prevent the buildup of azides, if disposal into a drain is in compliance with federal, state, and local requirements.

R22
S28

Harmful! Harmful if swallowed. After contact with skin, wash immediately with plenty of soap and water. **Contains:** sodium azide; Lite Reagent, Solid Phase

CAUTION: This device contains material of animal origin and should be handled as a potential carrier and transmitter of disease.

For *In Vitro* Diagnostic Use.

Loading Reagents

Ensure that the system has sufficient primary and ancillary reagent packs. For detailed information about preparing the system, refer to the system operating instructions or to the online help system.

NOTE: Mix all primary reagent packs by hand before loading them onto the system. Visually inspect the bottom of the reagent pack to ensure that all particles are dispersed and resuspended. For detailed information about preparing the reagents for use, refer to Appendix C, *Handling Reagents*.

Load the ReadyPack reagent packs in the primary reagent area using the arrows as a placement guide. The system automatically mixes the primary reagent packs to maintain homogeneous suspension of the reagents. For detailed information about loading reagents, refer to the system operating instructions or to the online help system.

If automatic dilution of a sample is required, load ADVIA Centaur Multi-Diluent 1 in the ancillary reagent entry.

Onboard Stability and Calibration Interval

Onboard Stability	Calibration Interval
28 days	28 days

Additionally, the ADVIA Centaur Prolactin assay requires a two-point calibration:

- when changing lot numbers of primary reagent packs
- when replacing system components
- when quality control results are repeatedly out of range

NOTE:

- Discard the primary reagent packs at the end of the onboard stability interval.
- Do not use reagents beyond the expiration date.

Master Curve Calibration

The ADVIA Centaur Prolactin assay requires a Master Curve calibration when using a new lot number of Lite Reagent and Solid Phase. For each new lot number of Lite Reagent and Solid Phase, use the barcode reader or keyboard to enter the Master Curve values on the system. The Master Curve card contains the Master Curve values. For detailed information about entering calibration values, refer to the system operating instructions or to the online help system.

Quality Control

For detailed information about entering quality control values, refer to the system operating instructions or to the online help system.

To monitor system performance and chart trends, as a minimum requirement, two levels of quality control material should be assayed on each day that samples are analyzed. Quality control samples should also be assayed when performing a two-point calibration. Treat all quality control samples the same as patient samples.

Siemens Healthcare Diagnostics recommends the use of commercially available quality control materials with at least 2 levels (low and high). A satisfactory level of performance is achieved when the analyte values obtained are within the Acceptable Control Range for the system or within your range, as determined by an appropriate internal laboratory quality control scheme.

If the quality control results do not fall within the Expected Values or within the laboratory's established values, do not report results. Take the following actions:

- Verify that the materials are not expired.
- Verify that required maintenance was performed.
- Verify that the assay was performed according to the instructions for use.
- Rerun the assay with fresh quality control samples.
- If necessary, contact your local technical support provider or distributor for assistance.

368

Sample Volume

This assay requires 25 µL of sample for a single determination. This volume does not include the unusable volume in the sample container or the additional volume required when performing duplicates or other tests on the same sample. For detailed information about determining the minimum required volume, refer to *Sample Volume Requirements* in the *ADVIA Centaur Reference Manual.*

NOTE: The sample volume required to perform onboard dilution differs from the sample volume required to perform a single determination. Refer to the following information for the sample volume required to perform onboard dilutions:

Dilution	Sample Volume (µL)
1:2	100
1:5	40

Assay Procedure

For detailed procedural information, refer to the system operating instructions or to the online help system.

Procedural Notes

Calculations

For detailed information about how the system calculates results, refer to the system operating instructions or to the online help system.

The system reports serum prolactin results in ng/mL (mass units) or µIU/mL (SI units), depending on the units defined when setting up the assay. The conversion formula is 1 ng/mL = 21.2 µIU/mL.

Dilutions

- Serum samples with prolactin levels greater than 200 ng/mL (4240 µIU/mL) must be diluted and retested to obtain accurate results.
- Patient samples can be automatically diluted by the system or prepared manually.
- For automatic dilutions, ensure that ADVIA Centaur Multi-Diluent 1 is loaded and set the system parameters as follows:

  Dilution point: ≤ 200 ng/mL (4240 µIU/mL)

  Dilution factor: 2, 5

  For detailed information about automatic dilutions, refer to the system operating instructions or to the online help system.
- Manually dilute the patient samples when patient results exceed the linearity of the assay using automatic dilution, or when laboratory protocol requires manual dilution.
- Use Multi-Diluent 1 to manually dilute patient samples, and then load the diluted sample in the sample rack, replacing the undiluted sample.
- Ensure that results are mathematically corrected for dilution. If a dilution factor is entered when scheduling the test, the system automatically calculates the result.

High Dose Hook Effect

Patient samples with high prolactin levels can cause a paradoxical decrease in the RLUs (high dose hook effect). In this assay, patient samples with prolactin levels as high as 30,000 ng/mL (636,000 µIU/mL) will assay greater than 200 ng/mL (4240 µIU/mL).

Disposal

Dispose of hazardous or biologically contaminated materials according to the practices of your institution. Discard all materials in a safe and acceptable manner, and in compliance with all federal, state, and local requirements.

Limitations

Pregnancy, lactation, and the administration of oral contraceptives can increase prolactin concentrations.[1]

Heterophilic antibodies in human serum can react with reagent immunoglobulins, interfering with *in vitro* immunoassays.[9] Patients routinely exposed to animals or to animal serum products can be prone to this interference and anomalous values may be observed. Additional information may be required for diagnosis.

Serum specimens that are . . .	Have an insignificant effect on the assay up to . . .
hemolyzed	500 mg/dL of hemoglobin
lipemic	1000 mg/dL of triglycerides
icteric	20 mg/dL of bilirubin

Expected Results

The expected results for the ACS:180® Prolactin assay were previously established. Data was obtained on serum samples from 661 apparently healthy individuals. Based on a central 95% interval, the following reference ranges were established:

Category	N	Mean (ng/mL)	Range (ng/mL)	Mean (µIU/mL)	Range (µIU/mL)
Females					
Nonpregnant	202	9.6	2.8–29.2	204	59–619
Pregnant	216	61.7	9.7–208.5	1308	206–4420
Postmenopausal	104	6.9	1.8–20.3	146	38–430
Males	139	7.0	2.1–17.7	148	45–375

These results were confirmed for the ADVIA Centaur Prolactin assay by analyzing 279 samples in the range of 1.4 to 185.1 ng/mL (29.3 to 3925.0 µIU/mL). Refer to *Method Comparison*.

As with all diagnostic assays, each laboratory should determine its own reference range(s) for the diagnostic evaluation of patient results.[10]

Performance Characteristics

Specificity

The cross-reactivity of the ADVIA Centaur Prolactin assay with TSH, LH, hCG, FSH, hGH, and hPL was determined by adding these hormones to serum samples containing prolactin. The level of prolactin in the samples was then determined.

Cross-reactant	Prolactin value without cross-reactant (ng/mL)	(µIU/mL)	Prolactin value with cross-reactant (ng/mL)	(µIU/mL)
TSH; 1000 µIU/mL	8.16	173	8.55	181
	42.82	908	43.40	920
	109.68	2325	107.30	2275
LH; 250 mIU/mL	8.16	173	8.84	187
	42.82	908	43.13	914
	109.68	2325	104.88	2223
hCG; 200,000 mIU/mL	8.16	173	8.30	176
	42.82	908	40.28	854
	109.68	2325	109.60	2324
FSH; 250 mIU/mL	8.16	173	8.40	178
	42.82	908	42.66	904
	110.08	2325	105.05	2227
hGH; 500 ng/mL	4.51	96	4.56	97
	42.82	908	42.22	895
	109.68	2325	108.22	2294
hPL; 12.5 µg/mL	2.50	53	2.51	53
	35.13	745	36.40	772
	88.67	1880	88.18	1869

Interference testing was determined according to CLSI Document EP7-A2[11]

Sensitivity and Assay Range

The ADVIA Centaur Prolactin assay measures prolactin concentrations up to 200 ng/mL (4240 µIU/mL) with a minimum detectable concentration (analytical sensitivity) of 0.3 ng/mL (6.4 µIU/mL). Analytical sensitivity is defined as the concentration of prolactin that corresponds to the RLUs that are two standard deviations greater than the mean RLUs of 20 replicate determinations of the prolactin zero standard.

Method Comparison

For 279 samples in the range of 1.4 to 185.1 ng/mL (29.3 to 3925.0 µIU/mL), the relationship between the ADVIA Centaur Prolactin assay and the ACS:180 Prolactin assay is described by the equation:

ADVIA Centaur Prolactin = 1.00 (ACS:180 Prolactin) + 0.56 ng/mL

Correlation coefficient (r) = 0.99

Dilution Recovery

Six human serum samples in the range of 158.9 to 178.5 ng/mL (3368.0 to 3784.4 µIU/mL) of prolactin were diluted 1:2, 1:4, 1:8, and 1:16 with Multi-Diluent 1 and assayed for recovery and parallelism. The recoveries ranged from 88.9% to 107.8% with a mean of 97.9%.

Sample	Dilution	Observed (ng/mL)	Expected (ng/mL)	Observed (µIU/mL)	Expected (µIU/mL)	Recovery %
1	—	178.5		3784.4		
	1:2	87.9	89.3	1863.5	1892.1	98.4
	1:4	43.0	44.6	911.6	946.2	96.4
	1:8	20.7	22.3	439.3	473.0	92.8
	1:16	10.1	11.2	213.5	236.6	90.2
	Mean					94.5

Sample	Dilution	Observed (ng/mL)	Expected (ng/mL)	Observed (µIU/mL)	Expected (µIU/mL)	Recovery %
2	—	173.5		3678.0		
	1:2	83.7	86.7	1773.8	1838.9	96.5
	1:4	41.1	43.4	870.9	919.4	94.7
	1:8	19.3	21.7	409.8	459.8	88.9
	1:16	9.4	10.8	198.9	229.8	90.4
	Mean					92.6
3	—	158.9		3368.0		
	1:2	81.7	79.4	1731.0	1683.9	102.9
	1:4	37.4	39.7	792.9	842.1	94.2
	1:8	19.7	19.9	416.8	421.0	99.0
	1:16	9.1	9.9	193.8	210.5	91.9
	Mean					97.0
4	—	159.9		3390.7		
	1:2	78.7	80.0	1667.4	1695.4	98.4
	1:4	39.7	40.0	842.5	847.8	99.3
	1:8	18.3	20.0	387.8	423.8	91.5
	1:16	9.2	10.0	195.7	212.0	92.0
	Mean					95.3
5	—	162.9		3453.7		
	1:2	86.0	81.5	1823.2	1727.0	105.5
	1:4	41.5	40.7	880.7	863.5	102.0
	1:8	22.0	20.4	465.3	431.6	107.8
	1:16	11.0	10.2	233.0	215.8	107.8
	Mean					105.8
6	—	178.0		3772.8		
	1:2	93.6	89.0	1984.5	1886.4	104.6
	1:4	46.9	44.5	993.6	943.2	105.4
	1:8	23.3	22.2	493.8	471.5	105.0
	1:16	10.5	11.1	221.5	235.7	94.6
	Mean					102.4
Mean						**97.9**

Spiking Recovery

Varying amounts of prolactin were added to six samples with endogenous prolactin levels of 4.1 to 15.2 ng/mL (86.9 to 322.2 µIU/mL). The recoveries ranged from 93.6% to 109.3% with a mean of 102.4%.

Sample	Amount Added (ng/mL)	Observed (ng/mL)	Amount Added (µIU/mL)	Observed (µIU/mL)	Recovery %
1	—	4.1	—	86.9	
	51.7	58.9	1096.0	1248.7	105.9
	104.1	112.3	2206.9	2380.8	103.9
	154.0	163.1	3264.8	3457.7	103.2
	Mean				104.3
2	—	6.5	—	137.8	
	51.7	63.0	1096.0	1335.6	109.3
	104.1	113.0	2206.9	2395.6	102.3
	154.0	161.2	3264.8	3417.4	100.5
	Mean				104.0
3	—	5.0	—	104.9	
	51.7	60.9	1096.0	1291.1	108.2
	104.1	114.4	2206.9	2425.3	105.1
	154.0	160.2	3264.8	3396.2	100.8
	Mean				104.7

372

Sample	Amount Added (ng/mL)	Observed (ng/mL)	Amount Added (µIU/mL)	Observed (µIU/mL)	Recovery %
4	—	14.9	—	315.9	
	38.6	56.2	818.3	1191.4	107.0
	77.7	90.1	1647.2	1910.1	96.8
	115.2	132.5	2442.2	2809.0	102.1
	Mean				102.0
5	—	15.2	—	322.2	
	38.6	55.6	818.3	1178.7	104.7
	77.7	87.9	1647.2	1863.5	93.6
	115.2	124.8	2442.2	2645.8	95.1
	Mean				97.8
6	—	10.2	—	216.2	
	38.6	51.1	818.3	1083.3	106.0
	77.7	83.6	1647.2	1772.3	94.5
	115.2	130.9	2442.2	2775.1	104.8
	Mean				101.8
Mean					**102.4**

Precision

Six samples were assayed 6 times, in each of 24 runs, on 3 systems, (n = 144 for each sample), over a period of 2 days. The following results were obtained:

Mean (ng/mL)	Mean (µIU/mL)	Within-run % CV	Run-to-run % CV	Total % CV
3.3	69.9	2.6	4.0	4.8
7.5	158.9	1.9	2.1	2.9
10.2	216.1	2.3	2.0	3.1
26.5	561.5	2.5	5.3	5.9
60.4	1279.9	2.8	3.4	4.4
118	2500.4	4.4	4.9	6.6

Standardization

The ADVIA Centaur Prolactin assay standardization is traceable to World Health Organization (WHO) 3rd IRP for human Prolactin (84/500). A comparison over the full assay range gave the following correlation:

$$\text{ADVIA Centaur PRL} = 1.06\ (\text{WHO}) - 0.6\ \text{IU/mL}$$

$$r = 0.99$$

Assigned values for calibrators are traceable to this standardization.

Technical Assistance

For customer support, please contact your local technical support provider or distributor.

www.siemens.com/diagnostics

References

1. Ashby CD. Prolactin. In: Kaplan LA, Pesce AJ, editors. Methods in clinical chemistry. St. Louis: CV Mosby, 1987. p.258–65.
2. Vander AJ, Sherman JH, Luciano DS. Human physiology: the mechanisms of body function. New York: McGraw-Hill Inc., 1985. p.589–91.
3. Liwnicz BH, Liwnicz RG. The hypothalamopituitary system. In: Kaplan LA, Pesce AJ, editors. Clinical Chemistry: theory, analysis, and correlation. St. Louis: CV Mosby, 1989. p.613–9.
4. Butt WR, Blunt SM. The role of the laboratory in the investigation of infertility. Ann Clin Biochem 1988;25:601–9.
5. Albertsen PC, Chang TSK. Hormone measurements in the assessment of male infertility. J Clin Immunoassay 1983;6(1):51–6.
6. Owens O. Steroidal hormonal evaluation for common gynecological and testicular disorders. In: Kaplan LA, Pesce AJ, editors. Methods in clinical chemistry. St. Louis: CV Mosby, 1987. p.216–7.
7. Reagent Water Technical Bulletin. Siemens Healthcare Diagnostics, 107060.
8. Clinical and Laboratory Standards Institute (formerly NCCLS). Procedures for the Handling and Processing of Blood Specimens; Approved Guideline - Third Edition. Wayne, PA: Clinical and Laboratory Standards Institute; 2004. NCCLS Document H18-A3.
9. Boscato LM, Stuart MC. Heterophilic antibodies: a problem for all immunoassays. Clin Chem 1988;34:27–33.
10. Clinical and Laboratory Standards Institute (formerly NCCLS). How to Define and Determine Reference Intervals in the Clinical Laboratory; Approved Guideline - Second Edition. Wayne, PA: Clinical and Laboratory Standards Institute; 2000. NCCLS Document C28-A2.
11. Clinical and Laboratory Standards Institute (formerly NCCLS). Interference Testing in Clinical Chemistry; Approved Guideline - Second Edition. Wayne, PA: Clinical and Laboratory Standards Institute; 2005. NCCLS document EP7-A2.

ADVIA Centaur, ReadyPack and ACS:180 are trademarks of Siemens Healthcare Diagnostics.

© 2008 Siemens Healthcare Diagnostics Inc. All rights reserved.

US Pats 4,745,181; 4,918,192; 5,110,932; 5,609,822; 5,788,928

Origin: US

Siemens Healthcare Diagnostics Inc.
Tarrytown, NY 10591-5097 USA

EC REP Siemens Healthcare Diagnostics Ltd.
Sir William Siemens Sq.
Frimley, Camberley, UK GU16 8QD

Siemens Healthcare
Diagnostics Pty Ltd
885 Mountain Highway
Bayswater Victoria 3153
Australia

シーメンスヘルスケア・
ダイアグノスティクス株式会社
東京都品川区東五反田3−20−14
Siemens Healthcare Diagnostics
輸入

Rubella G (Rub G)

Assay for the Detection of IgG Antibodies to Rubella Virus

Assay Summary

Sample Type	***Serum, Heparinized Plasma, EDTA Plasma***
Sample Volume	***10 µL***
Calibrator	***Rub G***
Sensitivity and Assay Range	***0.2–500 IU/mL***

Contents

REF	Contents	Number of Tests
08666235 (117710)	1 ReadyPack® primary reagent pack containing ADVIA Centaur® Rub G Lite Reagent and Solid Phase	100
	ADVIA Centaur Rub G Master Curve card	
	1 vial Rub G Low Calibrator CAL L	
	1 vial Rub G High Calibrator CAL H	
	ADVIA Centaur Rub G Calibrator Assigned Value card	

For a definition of symbols used in product labeling, refer to *Understanding the Symbols* in Appendix D.

Intended Use

The ADVIA Centaur Rubella IgG assay is an IgG-antibody capture microparticle direct chemiluminometric *in vitro* diagnostic immunoassay for the quantitative and qualitative detection of IgG antibodies to rubella virus in human serum or plasma (EDTA, heparin) using the ADVIA Centaur and ADVIA Centaur XP systems. This assay is used as an aid in the assessment of immune status to rubella in individuals including women of child-bearing age.

WARNING: The use of the ADVIA Centaur Rubella G assay to diagnose recent infection by testing acute and convalescent samples is not recommended. The calculated values for rubella IgG in a given specimen, as determined by assays from different manufacturers, can vary due to differences in assay methods and reagent specificity. The results reported by the laboratory to the physician must include the identity of the rubella IgG assay used. Values obtained with different assay methods cannot be used interchangeably. The reported IgG level cannot be correlated to an endpoint titer.

Materials Required but Not Provided

REF	Description	Contents
01549403 (117711)	ADVIA Centaur Rub G quality control material	2 x 2.7 mL Negative Control CONTROL -
		2 x 2.7 mL Low Positive Control CONTROL L +
		2 x 2.7 mL High Positive Control CONTROL H +
		Expected Value card

375

Summary and Explanation of the Test

Rubella is a member of the togaviridae family. Primary infections are generally mild, with symptoms such as a mild rash, low-grade fever, and lymphadenopathy. In contrast, primary infections during pregnancy can pass transplacentally to the fetus and can lead to fetal death or congenital rubella syndrome (CRS); the risk of fetal infection is greatest during the first trimester of pregnancy. Babies born with CRS typically exhibit low birth weight, deafness, eye disease, mental retardation, and cardiac abnormalities.

A primary infection induces an IgM and an IgG response. Within 4 to 6 months, IgM levels become undetectable or very low. IgG decreases to low levels, but lasts indefinitely and confers lifelong immunity. A secondary infection exhibits a rising IgG antibody without significant levels of IgM.[1]

Only one serological type of rubella virus is found in the population.[2,3] Since the introduction of the rubella vaccine in the late 1960s, the incidence of CRS has dropped dramatically. However, outbreaks of rubella have still occurred and pose a potential risk to women of childbearing age. Immunity from the vaccination is shown to persist for more than 16 years.[4] An antibody level of 10 IU/mL is thought to be protective.[5]

Assay Principle

The ADVIA Centaur Rubella G assay is a sandwich immunoassay using direct, chemiluminometric technology. The anti-human IgG_{Fc} monoclonal antibody is covalently coupled to paramagnetic particles in the Solid Phase. In the Lite Reagent, the rubella virus antigen is labeled with acridinium ester.

The sample is incubated simultaneously with Solid Phase and Lite Reagent. Antibody-antigen complexes will form if rubella IgG is present in the sample.

The system automatically performs the following actions:

- Dispenses 10 µL of sample into a cuvette.
- Dispenses 200 µL of Solid Phase and 100 µL of Lite Reagent and incubates the mixture for 18 minutes at 37°C.
- Separates the Solid Phase from the mixture and aspirates the unbound reagent.
- Washes the cuvette with reagent water.[6]
- Dispenses 300 µL each of Acid Reagent and Base Reagent to initiate the chemiluminescent reaction.
- Reports results according to the selected option, as described in the system operating instructions or in the online help system.

A direct relationship exists between the amount of rubella IgG activity present in the patient sample and the amount of relative light units (RLUs) detected by the system. A result of reactive (positive) or nonreactive (negative) is determined according to the Clinical and Laboratory Standards Institute (CLSI, formerly NCCLS) suggested cutoff of 10 IU/mL established with the calibrators.[5] Refer to *Interpretation of Results* for a description of the Cutoff Value calculation.

Specimen Collection and Handling

Serum, heparinized plasma, or EDTA plasma are the recommended sample types for this assay. Do not use heat inactivated specimens. Do not use specimens with obvious microbial contamination. The performance of the ADVIA Centaur Rubella G assay has not been established with cadaver specimens or body fluids other than serum or plasma such as saliva, urine, amniotic, or pleural fluids.

- Handle all samples as if capable of transmitting disease.
- Test samples as soon as possible after collecting. Store samples at 2° to 8°C if not tested immediately.
- Store specimens at 2° to 8°C up to 7 days. Specimens may be stored on the clot.
- Freeze samples, devoid of red blood cells, at or below -20°C for longer storage. Do not store in frost-free freezer. When 10 weakly positive samples and 5 negative samples were subject to 5 freeze/thaw cycles, no qualitative differences were observed. Thoroughly mix thawed samples and centrifuge for 10,000 x g for 10 minutes before using.
- Package and label samples for shipment in compliance with applicable federal and international regulations covering the transport of clinical samples and etiological agents. Samples maintained at room temperature up to 2 days or refrigerated up to 7 days demonstrated no qualitative differences. Store samples at 2° to 8°C upon arrival. If shipment is expected to exceed 7 days, ship specimens frozen.

Before placing samples on the system, ensure that samples have the following characteristics:

- Samples are free of fibrin or other particulate matter. Remove particulates by filtration or centrifugation at 1000 x g for 10 to 15 minutes.
- Samples are free of bubbles.

Reagents

Store the reagents upright at 2–8°C.
Mix all primary reagent packs by hand before loading them onto the system. Visually inspect the bottom of the reagent pack to ensure that all particles are dispersed and resuspended. For detailed information about preparing the reagents for use, refer to Appendix C, *Handling Reagents*.

Reagent Pack	Reagent	Volume	Ingredients	Storage	Stability
ADVIA Centaur Rub G ReadyPack primary reagent pack	Lite Reagent	10.0 mL/ reagent pack	inactivated rubella virus antigen (strain HPV 77) (~0.20 µg/mL) labeled with acridinium ester in protein buffer with surfactant and preservatives	2–8°C	Until the expiration date on the pack label. For onboard stability, refer to *Onboard Stability and Calibration Interval.*
	Solid Phase	20.0 mL/ reagent pack	anti-human IgG_{Fc} monoclonal antibody (~0.15 mg/mL) covalently coupled to paramagnetic particles in protein buffer with preservatives	2–8°C	Until the expiration date on the pack label. For onboard stability, refer to *Onboard Stability and Calibration Interval.*
Rub G calibrator vials	Calibrators	1.0 mL/ vial	processed human plasma positive for rubella IgG antibodies with preservatives	2–8°C	Until the expiration date on the vial or onboard–8 hours.
Rub G quality control material vials*	Controls	2.7 mL/ vial	processed human plasma negative and positive for rubella IgG antibodies with preservatives	2–8°C	Until the expiration date on the vial or onboard–8 hours.

* See *Materials Required but Not Provided.*

CAUTION! POTENTIAL BIOHAZARD: Contains human source material. While each human serum or plasma donor unit used in the manufacture of this product was tested by FDA-approved methods and found nonreactive for hepatitis B surface antigen (HBsAg), antibody to hepatitis C (HCV), and antibody to HIV-1/2, all products manufactured using human source material should be handled as potentially infectious. Because no test method can offer complete assurance that hepatitis B or C viruses, HIV, or other infectious agents are absent, these products should be handled according to established good laboratory practices.[7-9]

For *in vitro* diagnostic use.

Loading Reagents

Ensure that the system has sufficient primary reagent packs. For detailed information about preparing the system, refer to the system operating instructions or to the online help system.

Mix all primary reagent packs by hand before loading them onto the system. Visually inspect the bottom of the reagent pack to ensure that all particles are dispersed and resuspended. For detailed information about preparing the reagents for use, refer to Appendix C, *Handling Reagents*.

Load the ReadyPack primary reagent packs in the primary reagent compartment using the arrows on the packs as a placement guide. The system automatically mixes the primary reagent packs to maintain homogeneous suspension of the reagents. For detailed information about loading reagents, refer to the system operating instructions or to the online help system.

NOTE: The Low and High Calibrators provided in this kit are matched to the ReadyPack primary reagent pack. Do not mix calibrator lots with different lots of reagent packs.

Onboard Stability and Calibration Interval

Onboard Stability	Calibration Interval
28 days	14 days

Additionally, the ADVIA Centaur Rubella G assay requires a two-point calibration:

- when changing lot numbers of primary reagent packs
- when replacing system components
- when quality control results are repeatedly out of range

NOTE:

- Discard reagent packs at the end of the onboard stability interval.
- Do not use reagents beyond the expiration date.

Calibration

For detailed information about entering calibration values, refer to the system operating instructions or to the online help system.

Using Bar-code Labels

Calibrator bar-code labels are lot-number specific. Do not use bar-code labels from one lot of calibrators with any other lot of calibrators.

Use the ADVIA Centaur Rubella G Calibrator bar-code labels to identify the Low and High Calibrator sample cups when performing the ADVIA Centaur Rubella G assay. Place the bar-code label on the sample cup so that the readable characters on the side of the label are vertical on the sample cup.

Performing a Calibration

Each lot of calibrators contains a Calibrator Assigned Value card to facilitate entering the calibration values on the system. Enter the values using the bar-code scanner or the keyboard.

Perform the calibration procedure using the following steps:

NOTE: This procedure uses calibrator volumes sufficient to measure each calibrator in duplicate.

1. Schedule the calibrators to the worklist.

2. Label two sample cups with calibrator bar-code labels: one for the low and another for the high.

NOTE: Each drop from the calibrator vial is approximately 50 µL.

3. Gently mix the Low and High Calibrators and dispense at least 4 to 5 drops into the appropriate sample cups.
4. Load the sample cups in a rack.
5. Place the rack in the sample entry queue.
6. Ensure that the assay reagents are loaded.
7. Start the entry queue, if required.

NOTE: Dispose of any calibrator remaining in the sample cups after 8 hours. Do not refill sample cups when the contents are depleted; if required, dispense fresh calibrators.

Quality Control

For quality control of the ADVIA Centaur Rubella G assay, use ADVIA Centaur Rubella G quality control materials. Refer to the Expected Value card for the suggested expected values specific for the lot number of the positive and negative controls.

Using Bar-code Labels

Control bar-code labels are lot-number specific. Do not use bar-code labels from one lot of controls with any other lot of controls.

Use the ADVIA Centaur Rubella G quality control bar-code labels to identify the positive and negative sample cups when performing the ADVIA Centaur Rubella G assay. Place the bar-code label on the sample cup so that the readable characters on the side of the label are vertical on the sample cup.

Performing Quality Control

For detailed information about entering quality control values, refer to the system operating instructions or to the online help system.

To monitor system performance and chart trends, as a minimum requirement, quality control samples should be assayed on each workshift that samples are analyzed. Quality control samples should also be assayed when performing a two-point calibration. Treat all quality control samples the same as patient samples.

Perform the quality control procedure using the following steps:

NOTE: This procedure uses control volumes sufficient to measure each control in duplicate.

1. Schedule the quality control samples to the worklist.
2. Label three sample cups with quality control bar-code labels: one for the low positive, one for the high positive, and another for the negative.

NOTE: Each drop from the control vial is approximately 50 µL.

3. Gently mix the quality control materials and dispense at least 4 to 5 drops into the appropriate sample cups.
4. Load the sample cups in a rack.
5. Place the rack in the sample entry queue.
6. Ensure that the assay reagents are loaded.
7. Start the entry queue, if required.

NOTE: Dispose of any quality control materials remaining in the sample cups after 8 hours. Do not refill sample cups when the contents are depleted; if required, dispense fresh quality control materials.

Taking Corrective Action

If the quality control results do not fall within the Expected Values or within the laboratory's established values, do not report results. Take the following actions:

- Verify that the materials are not expired.
- Verify that required maintenance was performed.
- Verify that the assay was performed according to the instructions for use.
- Rerun the assay with fresh quality control samples.
- If necessary, contact your local technical support provider or distributor for assistance.

Sample Volume

This assay requires 10 µL of sample for a single determination. This volume does not include the unusable volume in the sample container or the additional volume required when performing duplicates or other tests on the same sample. For detailed information about determining the minimum required volume, refer to *Sample Volume Requirements* in the *ADVIA Centaur Reference Manual.*

Assay Procedure

For detailed procedural information, refer to the system operating instructions or to the online help system.

Procedural Notes

Disposal

Dispose of hazardous or biologically contaminated materials according to the practices of your institution. Discard all materials in a safe and acceptable manner, and in compliance with all federal, state, and local requirements.

Interpretation of Results

For detailed information about how the system calculates results, refer to the system operating instructions or to the online help system.

The system reports rubella IgG antibody results in IU/mL and as reactive (positive), equivocal, or nonreactive (negative).

- Samples with a calculated value of less than 5.0 IU/mL are considered negative for IgG antibodies to rubella virus.
- Samples with a calculated value greater than or equal to 5.0 IU/mL and less than or equal to 9.9 IU/mL are considered equivocal for IgG antibodies to rubella virus. Obtain a new specimen and test using the ADVIA Centaur Rubella G assay.
- Samples with a calculated value greater than or equal to 10.0 IU/mL are considered positive for IgG antibodies to rubella virus.
- Sample results are invalid and must be repeated if the controls are out of range.

The 10.0 IU/mL or greater results are considered positive in accordance with the CLSI guidelines and based on the WHO International Standard for Anti-Rubella serum as an indicator of immune status and a breakpoint to detect most seropositive persons.[5] The cutoff for the ADVIA Centaur Rubella IgG assay was verified based on results of Receiver-Operator Characteristics (ROC) Curve and positive/negative predictive values generated from the results of the clinical studies.

Limitations

The following information pertains to limitations of the assay:

- The use of the ADVIA Centaur Rubella G assay to diagnose recent infection by testing acute and convalescent sera samples has not been validated. The ADVIA Centaur Rubella G assay is limited to the detection of IgG antibodies to rubella virus in human serum or plasma (heparinized plasma or EDTA).
- Specimens taken early during the acute phase of infection may not contain detectable levels of IgG antibodies to rubella virus.
- The performance of the ADVIA Centaur Rubella G assay has not been established with cord blood, neonatal specimens, cadaver specimens, or body fluids other than serum or plasma, such as saliva, urine, amniotic, or pleural fluids.
- The performance of the assay has not been established for populations of immunocompromised or immunosuppressed patients.
- Do not use heat inactivated specimens.
- Do not use specimens with obvious microbial contamination.

Serum specimens that are . . .	*Demonstrate ≤ 10% change in results . . .*
hemolyzed	up to 500 mg/dL of hemoglobin
lipemic	up to 1000 mg/dL of triglycerides
icteric	up to 60 mg/dL of conjugated bilirubin up to 40 mg/dL of unconjugated bilirubin
hypo/hyperproteinemia	between 3–12 g/dL of protein

Samples with naturally occurring low protein (2.9 to 3.7 g/dL) and high protein (10.6 to 11.7 g/dL) levels tested using the ADVIA Centaur Rubella G assay yielded the same diagnosis as other assay methods.

For patient samples measuring at or around the cutoff value of 10 to 15 IU/mL, significantly elevated or increasing concentrations of total IgG may change a positive qualitative interpretation to equivocal, or rarely, may result in a negative interpretation.

Expected Values

Among populations, the occurrence of IgG antibody to the rubella virus varies. The level of seropositivity ranges widely.[10-12] Data was obtained on 990 samples from prenatal women and random individuals. Of these samples, 918 (92.7%) were positive, 35 (3.5%) were equivocal, and 37 (3.7%) were negative.

As with all in vitro diagnostic assays, each laboratory should determine its own reference range(s) for the diagnostic evaluation of patient results.[13]

Population	*N*	*Negative*	*Equivocal*	*Positive*
Prenatal women	699	22 (3.1%)	23 (3.3%)	654 (93.6%)
Random individuals	291	15 (5.2%)	12 (4.1%)	264 (90.7%)

381

ADVIA Centaur Rubella IgG – Population Observed Values

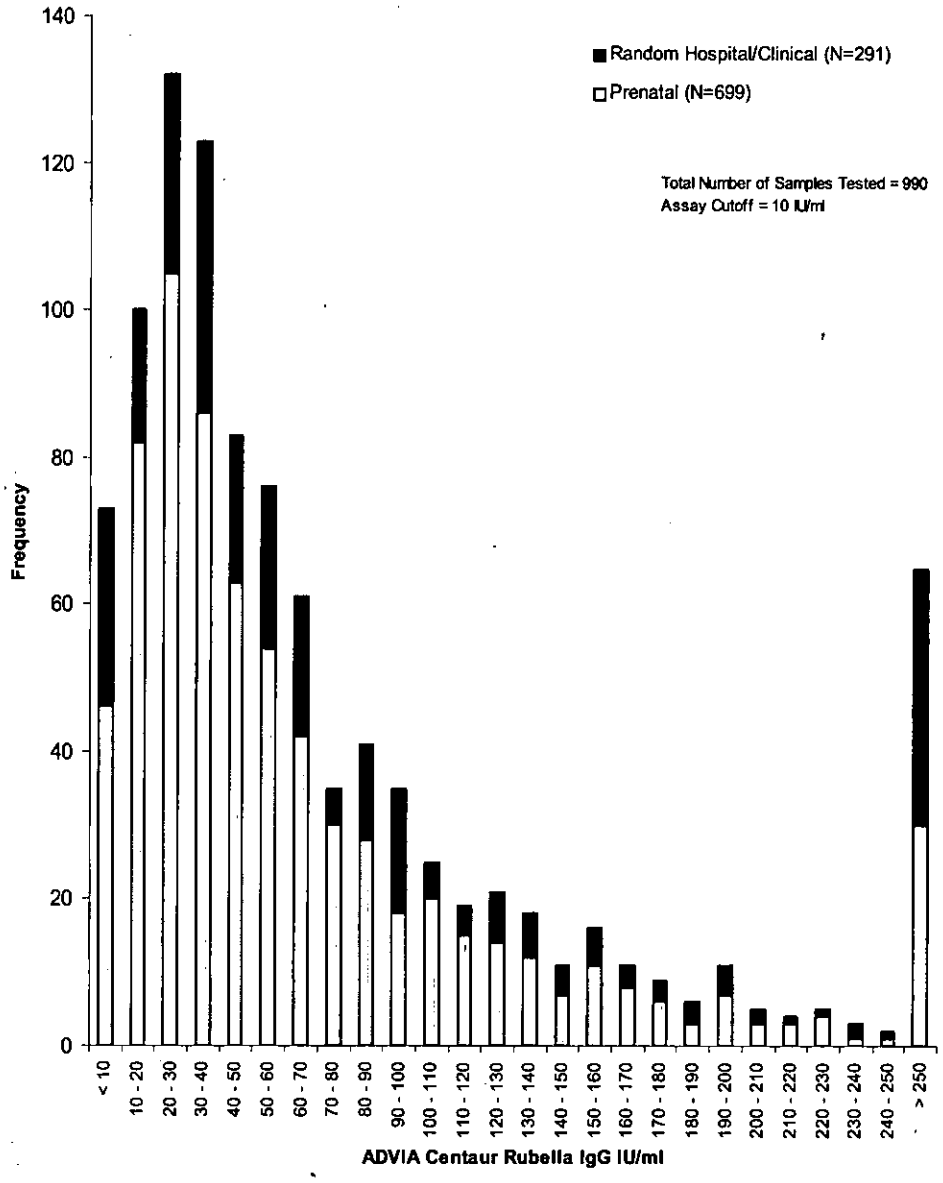

382

Performance Characteristics

Sensitivity and Specificity

Relative Agreement

The presence of rubella IgG antibody in 1337 frozen and fresh specimens was evaluated at three U. S. sites using the ADVIA Centaur Rubella G assay and a commercially available rubella IgG EIA. Prenatal and random hospital and clinical specimens were obtained from the mid-Atlantic and Midwest regions of the United States as well as Canada and Germany. Of the 1337 specimens tested, 43 were equivocal by the ADVIA Centaur Rubella G assay. Discordant results were found on 9 specimens. Further evaluation was performed with the discordant samples using other commercially available tests for rubella IgG.

Relative Sensitivity

Using the alternative method, 1029/1337 tested positive for rubella IgG antibody. Of the specimens that tested positive, 23 were equivocal, 1000 were positive, and 6 were negative using the ADVIA Centaur Rubella G assay. The relative sensitivity was 99.4%.

Relative Specificity

Using the alternative method, 245/1337 tested negative for rubella IgG antibody. Of the specimens that tested negative, 5 were equivocal, 242 were negative, and 3 were positive using the ADVIA Centaur Rubella G assay. The relative specificity was 98.8%.

NOTE: Samples giving equivocal results were not included in the calculation of relative sensitivity, relative specificity, and relative agreement. Please be advised that 'relative' refers to the comparison of this assay's results to that of a similar assay. There was not an attempt to correlate the assay's results with disease presence or absence. No judgment can be made on the comparison assay's accuracy to predict disease.

Relative Sensitivity, Specificity, and Agreement before Resolution of Discordant Samples

Site	N	Relative Sensitivity (%)	Relative Specificity (%)	Relative Agreement (%)
1	645	100 (466/466)	99.4 (152/153)	99.8 (618/619)
2	350	98.9 (269/272)	100 (49/49)	99.1 (318/321)
3	342	98.9 (265/268)	95.4 (41/43)	98.4 (306/311)
Total	1337	99.4 (1000/1006)	98.8 (242/245)	99.3 (1242/1251)

		Predicate Rubella IgG			
		Positive	Equivocal	Negative	Total
ADVIA Centaur Rubella G	Positive	1000	9	3	1012
	Equivocal	23	15	5	43
	Negative	6	34	242	282
	Total	1029	58	250	1337

Relative sensitivity = 99.4% (1000/1006), 95% CI (Confidence Interval) = 98.71–99.78
Relative specificity = 98.8% (242/245), 95% CI = 96.46–99.75
Relative agreement = 99.3% (1242/1251), 95% CI = 98.64–99.67

Consensus Testing

Further analysis of the nine specimens with discordant results was performed using an additional commercially available EIA for rubella IgG. Of the three that were positive by ADVIA Centaur and negative by EIA, one was equivocal and two were positive by consensus. Of the six that were negative by ADVIA Centaur and positive by EIA, one was equivocal, one was positive, and four were negative by consensus.

CDC Panel

A serum panel obtained from the Centers for Disease Control (CDC) was tested using the ADVIA Centaur Rubella G assay. The testing was performed to provide additional information about the performance of the ADVIA Centaur Rubella G assay with a characterized serum panel. This is not an endorsement of the assay by the CDC.

The panel consisted of 82 positive and 18 negative samples. The ADVIA Centaur Rubella G assay correctly identified all (100) panel members.

Precision

Reproducibility of the ADVIA Centaur Rubella G assay was determined as described in CLSI protocol EP5-A2.[14] A sixteen member panel of serum and plasma was assayed two times in two separate daily runs, over a period of 20 days (n = 80). The following results were obtained using one reagent lot and a stored calibration curve:

Panel Member	Sample Type	N	Mean Concentration (IU/mL)	Within-run SD	Within-run % CV	Total† SD	Total† % CV
	Negative Control	80	0.0	0.02	NA*	0.05	NA
	Positive 1 Control	80	27.1	0.45	1.66	0.57	2.12
	Positive 2 Control	80	104.5	2.10	2.54	3.92	3.75
1	Serum	80	0.1	0.03	NA	0.15	NA
2	EDTA	80	0.1	0.03	NA	0.13	NA
3	Heparin	80	0.0	0.02	NA	0.10	NA
4	Sodium citrate	80	0.0	0.02	NA	0.11	NA
5	Serum	80	9.7	0.21	2.18	0.40	4.08
6	EDTA	80	9.4	0.18	1.86	0.31	3.32
7	Heparin	79	9.4	0.22	2.36	0.35	3.74
8	Sodium citrate	80	9.0	0.13	1.44	0.30	3.31
9	Serum	79	11.6	0.18	1.52	0.35	3.05
10	EDTA	80	11.3	0.23	2.08	0.37	3.27
11	Heparin	80	11.4	0.21	1.88	0.63	5.50
12	Sodium citrate	80	10.9	0.22	1.99	0.78	7.16
13	Serum	80	164.8	5.26	3.19	10.00	6.08
14	EDTA	80	180.4	5.04	2.80	11.90	6.62
15	Heparin	80	169.5	4.93	2.91	9.81	5.78
16	Sodium citrate	78	207.5	6.63	3.20	13.50	6.50

* NA = Not Applicable.

† Includes within-run and run-to-run.

System reproducibility was determined by testing a 5 member panel with 3 reagent lots including 5 instruments and 3 sites over multiple days. The panel was assayed 3 times in each of 55 runs. The following results were obtained:

Panel Member	N	Mean Concentration (IU/mL)	Within-run SD	Within-run % CV	Total† SD	Total† % CV
Negative Control	168	0.33	0.04	NA*	0.06	NA
Positive 1 Control	165	19.90	0.31	1.57	1.28	6.41
Positive 2 Control	164	80.24	1.54	1.92	6.47	8.07
1	165	0.57	0.06	NA	0.14	NA
2	165	0.79	0.03	4.76	0.20	24.75
3	165	6.89	0.57	8.32	0.78	11.37
4	165	11.90	0.22	1.88	0.71	6.00
5	165	20.10	0.37	1.86	1.40	6.98

* NA = Not Applicable.

† Includes within-run and run-to-run.

The reproducibility was also calculated for each individual site with each panel member:

Rubella IgG Precision Summary by Site

Panel Member	Site Code	Number of Observations	Mean Concentration (IU/mL)	Within-run SD	Within-run % CV	Total† SD	Total† % CV
Negative Control	1	138	0.38	0.05	NA*	0.07	NA*
Negative Control	2	15	0.10	0.00	NA	0.00	NA
Negative Control	3	15	0.10	0.00	NA	0.00	NA
Positive Control 1	1	135	19.85	0.29	1.5	1.31	6.6
Positive Control 1	2	15	20.97	0.47	2.2	1.19	5.7
Positive Control 1	3	15	19.23	0.28	1.5	1.05	5.5
Positive Control 2	1	134	80.43	1.52	1.9	6.41	8.0
Positive Control 2	2	15	80.96	1.55	1.9	4.46	5.5
Positive Control 2	3	15	77.81	1.72	2.2	8.43	10.8
1	1	135	0.67	0.06	NA	0.15	NA
1	2	15	0.10	0.00	NA	0.00	NA
1	3	15	0.10	0.00	NA	0.00	NA
2	1	135	0.95	0.04	NA	0.22	NA
2	2	15	0.10	0.00	NA	0.00	NA
2	3	15	0.10	0.00	NA	0.00	NA
3	1	135	6.97	0.63	9.0	0.83	11.9
3	2	15	6.80	0.21	3.0	0.57	8.4
3	3	15	6.17	0.16	2.6	0.51	8.2
4	1	135	11.79	0.22	1.8	0.66	5.6
4	2	15	12.92	0.31	2.4	0.90	7.0
4	3	15	11.83	0.18	1.5	0.94	7.9
5	1	135	20.36	0.38	1.9	1.44	7.1
5	2	15	19.19	0.45	2.3	0.95	4.9
5	3	15	18.73	0.23	1.2	1.41	7.5

* NA = Not Applicable.

† Includes within-run and run-to-run.

Evaluation of Potential Interfering Disease States

To further evaluate the specificity of the ADVIA Centaur Rubella G assay, 100 specimens from individuals with the various disease states were tested. The rubella IgG status of the specimens was confirmed using an alternate method. The results are shown in the following table:

Disease State	Rubella IgG Status by Alternate Method	ADVIA Centaur Rubella G Assay Result < 10.0 (IU/mL)	≥ 10.0 (IU/mL)
Cytomegalovirus	Negative	3	0
	Positive	1*	6
Epstein-Barr virus	Negative	0	0
	Positive	0	10
Herpes simplex virus	Negative	3	0
	Positive	1*	6
Influenza vacinees	Negative	0	0
	Positive	0	10
Measles virus	Negative	0	0
	Positive	0	10
Parvovirus B19	Negative	0	0
	Positive	0	10
Syphilis	Negative	1	0
	Positive	1*	8

Disease State	Rubella IgG Status by Alternate Method	ADVIA Centaur Rubella G Assay Result < 10.0 (IU/mL)	≥ 10.0 (IU/mL)
Varicella zoster virus	Negative	1	0
	Positive	0	9
Multiple myeloma	Negative	2	0
	Positive	5†	3
Rheumatoid factor	Negative	0	0
	Positive	0	5
ANA	Negative	1	0
	Positive	1*	3

* Equivocal result on ADVIA Centaur Rubella G assay.

† IgG concentration was greater than 25 mg/mL.

Standardization

The ADVIA Centaur Rubella G assay standardization is traceable to World Health Organization (WHO) 1st International standard for human anti-rubella immunoglobulin (RUBI-1-94). A comparison over the range of 0–50 IU/mL using two lots of reagents gave the following correlation:

$$\text{ADVIA Centaur Rubella G} = 0.96\ (\text{WHO}) + 0.6\ \text{IU/mL}$$
$$r = 0.995$$

Assigned values for calibrators and controls are traceable to this standardization.

Linearity

Seven specimens were serially diluted in serum and plasma. Linear regression demonstrated linearity throughout the range of the assay. A representative sample is shown with slope, y-intercept, correlation coefficient, and 95% confidence limits.

386

ADVIA Centaur Rubella G: Linearity Study
Sample #189 Diluted in Plasma (with 95% Confidence Limits)

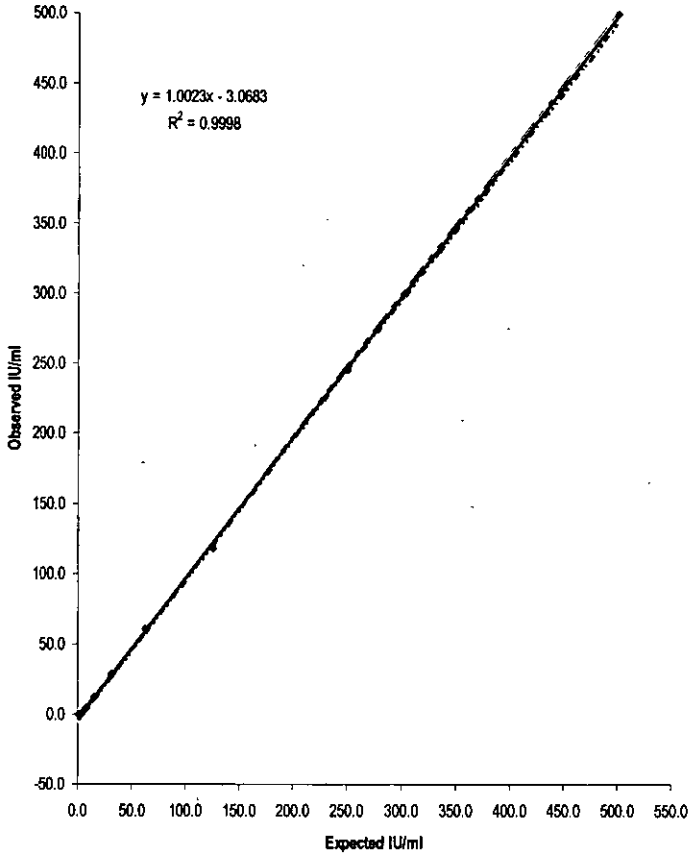

Technical Assistance

For customer support, contact your local technical support provider or distributor.

www.siemens.com/diagnostics

References

1. Armstrong AS, Safford JW, Holbert DN, Mushahra IK. Congenital diseases of microbiological origin. In: The Immunoassay Handbook: Applications. Edited by David Wood. New York: Stockton Press, 1994:499–501.
2. Cordoba P, Grutadauria S, Cuffini C, et al. Different affinity of monoclonal antibodies for conserved neutralizing epitopes on two strains of rubella virus. *Viral Immunity.* 1997;2:103–10.
3. Katow S, Minahara H, Fukushima, Yamaguchi Y. Molecular epidemiology of rubella by nucleotide sequences of the rubella virus E1 gene in three east Asian countries. *J Infect Dis.* 1997;176:602–16.
4. Aboudy Y, Fogel A Barnea B, et al. Subclinical rubella reinfection during pregnancy followed by transmission of virus to the fetus. *J of Infection.* 1997;34:273–6.
5. Clinical and Laboratory Standards Institute (formerly NCCLS). *Detection and Quantitation of Rubella IgG Antibody: Evaluation and Performance Criteria for Multiple Component Test Products, Specimen Handling, and Use of Test Products in the Clinical Laboratory; Approved Guideline.* Wayne, PA: Clinical and Laboratory Standards Institute; 1997. NCCLS document I/LA6-A.
6. Reagent Water Technical Bulletin. Siemens Healthcare Diagnostics, 107060.
7. Centers for Disease Control. Update: Universal precautions for prevention of transmission of human immunodeficiency virus, hepatitis B virus and other bloodborne pathogens in healthcare settings. MMWR 1988;37:377-82, 387-8.
8. Clinical and Laboratory Standards Institute (formerly NCCLS). *Protection of Laboratory Workers From Occupationally Acquired Infections; Approved Guideline - Third Edition.* Wayne, PA: Clinical and Laboratory Standards Institute; 2005. NCCLS Document M29-A3.
9. Federal Occupational Safety and Health Administration, Bloodborne Pathogens Standard, 29 CFR 1910.1030.
10. Lin D-B, Chen C-J. Current seroepidemiology of rubella virus infection among female residents in Taiwan. *J Med Virol.* 1993;41:174–8.
11. Montero MT, Varela Y, Gid G, et al. Serosurveillance of susceptibility to rubella in a Mexican female group. *J Hygiene, Microbiol, and Immunol.* 1992;36:49–54.
12. Kelley PW, Petruccelli BP, Stehr-Green P, et al. The susceptibility of young adult Americans to vaccine-preventable infections. *JAMA.* 1991;266:2724–9.
13. Clinical and Laboratory Standards Institute (formerly NCCLS). *How to Define and Determine Reference Intervals in the Clinical Laboratory; Approved Guideline - Second Edition.* Wayne, PA: Clinical and Laboratory Standards Institute; 2000. NCCLS Document C28-A2.
14. Clinical and Laboratory Standards Institute (formerly NCCLS). *Evaluation of Precision Performance of Quantitative Measurement Methods; Approved Guideline - Second Edition.* Wayne, PA: Clinical and Laboratory Standards Institute; 2004. NCCLS Document EP5-A2.

- ADVIA Centaur and ReadyPack are trademarks of Siemens Healthcare Diagnostics.

© 2010 Siemens Healthcare Diagnostics. All rights reserved.

US Pats 5,609,822; 5,656,426; 5,788,928

Origin: US

Siemens Healthcare Diagnostics Inc.
Tarrytown, NY 10591-5097 USA

EC REP Siemens Healthcare Diagnostics Ltd.
Sir William Siemens Sq.
Frimley, Camberley, UK GU16 8QD

Siemens Healthcare
Diagnostics Pty Ltd
885 Mountain Highway
Bayswater Victoria 3153
Australia

シーメンスヘルスケア・
ダイアグノスティクス株式会社
東京都品川区東五反田 3－20－14
Siemens Healthcare Diagnostics
輸入

388

Rubella M (Rub M)

CE 0088

Assay for the Detection of IgM Antibodies to Rubella Virus

Assay Summary

Sample Type	***Serum, Heparinized Plasma, EDTA Plasma***
Sample Volume	***20 µL***
Calibrator	***Rub M***
Assay Range	***0.0 – 15.00 Index***

Contents

REF	Contents	Number of Tests
02633319 (117733)	1 ReadyPack® primary reagent pack containing ADVIA Centaur® Rub M Lite Reagent and Solid Phase ADVIA Centaur Rub M Master Curve card 1 vial Rub M Low Calibrator [CAL L] 1 vial Rub M High Calibrator [CAL H] ADVIA Centaur Rub M Calibrator Assigned Value card	50

For a definition of symbols used in product labeling, refer to *Understanding the Symbols* in Appendix D.

Intended Use

The ADVIA Centaur and ADVIA Centaur XP Rubella IgM assay is an IgM antibody capture microparticle direct chemiluminometric *in vitro* diagnostic immunoassay for the qualitative detection of IgM antibodies to the rubella virus in serum or plasma (EDTA, heparin) as an aid in the presumptive diagnosis of current or recent infection with rubella.

WARNING: The calculated values for rubella IgM in a given specimen, as determined by assays from different manufacturers, can vary due to differences in assay methods and reagent specificity. The results reported by the laboratory to the physician must include the identity of the rubella IgM assay used. Values obtained with different assay methods cannot be used interchangeably. The reported IgM level cannot be correlated to an endpoint titer.

Materials Required but Not Provided

REF	Description	Contents
01137199 (112351)	ADVIA Centaur Wash 1 [WASH 1]	2 x 1500 mL/pack
or 03773025	ADVIA Centaur Wash 1 [WASH 1] *	2 x 2500 mL/pack
00347629 (117734)	ADVIA Centaur Rub M quality control material	2 x 2.7 mL Negative Control [CONTROL -] 2 x 2.7 mL Positive Control [CONTROL +] Expected Value card
07948423 (110314)	ADVIA Centaur Multi-Diluent 2 [M-DIL 2]	2 ReadyPack ancillary reagent packs containing 10 mL/pack

*for use with systems with 2500 mL capacity

389

Summary and Explanation of the Test

Rubella is a member of the togaviridae family. Primary infections are generally mild, with symptoms such as a mild rash, low-grade fever, and lymphadenopathy. In contrast, primary infections during pregnancy can pass transplacentally to the fetus and can lead to fetal death or congenital rubella syndrome (CRS); the risk of fetal infection is greatest during the first trimester of pregnancy. Babies born with CRS typically exhibit low birth weight, deafness, eye disease, mental retardation, and cardiac abnormalities.

Rubella infections are difficult to diagnose from the appearance and symptoms of the patient alone, so laboratory analyses have become the diagnostic standard. Because of the difficulty of detecting rubella virus in the circulation, rubella infection is usually diagnosed using serological tests. The test results indicate the response of the patient's immune system to the virus.[1] A primary infection of, or vaccination with, rubella almost always induces both an IgM and an IgG response. Within a few months, the IgM usually becomes undetectable, although it may persist for years in some individuals.[2] The IgG may also decrease after its initial rise, but, in most people, remains at a protective level for years. Subsequent re-exposure to rubella can cause a rapid rise in the titer of specific IgG antibodies, but the IgM titer does not usually rise as well. It has been reported that exposure to certain other viruses can result in the appearance in the circulation of measurable amounts of rubella-specific IgM antibodies, but the mechanism behind this is unknown.[3]

Only one serological type of rubella virus is found in the population.[4,5] Since the introduction of the rubella vaccine in the late 1960s, the incidence of CRS has dropped dramatically. However, outbreaks of rubella have still occurred and pose a potential risk to women of childbearing age.

Assay Principle

The ADVIA Centaur Rubella M assay is a sandwich immunoassay using direct, chemiluminometric technology. The anti-human IgM_{Fc} monoclonal antibody is covalently coupled to paramagnetic particles in the Solid Phase. In the Lite Reagent, the rubella virus antigen is labeled with acridinium ester. Antibody-antigen complexes will form if rubella IgM is present in the sample.

The system automatically performs the following actions:

- Dispenses 20 µL of sample and 335 µL of Multi-Diluent 2 into a cuvette.
- Aspirates 20 µL of diluted sample and dispenses it into a cuvette.
- Dispenses 250 µL of Solid Phase and incubates the mixture for 18 minutes at 37°C.
- Separates the Solid Phase from the mixture and aspirates the unbound reagent.
- Washes the cuvette with Wash 1.
- Dispenses 150 µL Lite Reagent and incubates the mixture for 18 minutes at 37°C.
- Separates the Solid Phase from the mixture and aspirates the unbound reagent.
- Washes the cuvette with Wash 1.
- Dispenses 300 µL each of Acid Reagent and Base Reagent to initiate the chemiluminescent reaction.
- Reports results according to the selected option, as described in the system operating instructions or in the online help system.

A direct relationship exists between the amount of rubella IgM activity present in the patient sample and the amount of relative light units (RLUs) detected by the system. A result of reactive (positive) or nonreactive (negative) is determined according to the Cutoff Index Value established with the calibrators. Refer to *Interpretation of Results* for a description of the Cutoff Index Value calculation.

Specimen Collection and Handling

Serum, heparinized plasma, or EDTA plasma are the recommended sample types for this assay. Do not use heat inactivated specimens. Do not use specimens with obvious microbial contamination. The performance of the ADVIA Centaur Rubella M assay has not been established with cadaver specimens or body fluids other than serum or plasma such as saliva, urine, amniotic, or pleural fluids.

- Handle all samples as if capable of transmitting disease.
- Test samples as soon as possible after collecting. Store samples at 2° to 8°C if not tested immediately.
- Store specimens at 2° to 8°C up to 7 days. Specimens may be stored on the clot.
- Freeze samples, devoid of red blood cells, at or below -20°C for longer storage. Do not store in frost-free freezer. When 3 weakly positive samples and 9 negative samples were subject to 5 freeze/thaw cycles, no qualitative differences were observed. Thoroughly mix thawed samples and centrifuge for 10,000 x g for 10 minutes before using.
- Package and label samples for shipment in compliance with applicable federal and international regulations covering the transport of clinical samples and etiological agents. Samples maintained at room temperature up to 2 days or refrigerated up to 7 days demonstrated no qualitative differences. Store samples at 2° to 8°C upon arrival. If shipment is expected to exceed 7 days, ship specimens frozen.

Before placing samples on the system, ensure that samples have the following characteristics:

- Samples are free of fibrin or other particulate matter. Remove particulates by filtration or centrifugation at 1000 x g for 10 to 15 minutes.
- Samples are free of bubbles.

Reagents

UP

Store the reagents upright at 2–8°C.
Mix all primary reagent packs by hand before loading them onto the system. Visually inspect the bottom of the reagent pack to ensure that all particles are dispersed and resuspended. For detailed information about preparing the reagents for use, refer to Appendix C, *Handling Reagents*.

Reagent Pack	Reagent	Volume	Ingredients	Storage	Stability
ADVIA Centaur Rub M ReadyPack primary reagent pack	Lite Reagent	7.5 mL/ reagent pack	inactivated rubella virus antigen (strain HPV 77) (~0.27 µg/mL) labeled with acridinium ester in buffer with preservatives	2–8°C	Until the expiration date on the pack label. For onboard stability, refer to *Onboard Stability and Calibration Interval.*
	Solid Phase	12.5 mL/ reagent pack	anti-human IgMµ monoclonal antibody (~0.14 mg/mL) covalently coupled to paramagnetic particles in buffer with preservatives	2–8°C	Until the expiration date on the pack label. For onboard stability, refer to *Onboard Stability and Calibration Interval.*
Rub M calibrator vials	Calibrators	1.0 mL/ vial	processed human plasma positive for rubella IgM antibodies with preservatives	2–8°C	Until the expiration date on the vial or onboard–8 hours.

391

Reagent Pack	Reagent	Volume	Ingredients	Storage	Stability
ADVIA Centaur M-DIL 2 ReadyPack ancillary reagent pack*	Multi-Diluent 2	10.0 mL/ reagent pack	goat serum with sodium azide (0.1%) and preservatives	2–8°C	Until the expiration date on the pack label or 28 consecutive days after accessing the ancillary reagent pack.
ADVIA Centaur WASH 1 *	Wash 1	1500 mL/ pack	phosphate buffered saline with sodium azide (< 0.1%) and surfactant	2–25°C	Until the expiration date on the vial or onboard–1 month.
ADVIA Centaur WASH 1 *	Wash 1	2500 mL/ pack	phosphate buffered saline with sodium azide (< 0.1%) and surfactant	2–25°C	Until the expiration date on the vial or onboard–1 month.
Rub M quality control material vials*	Controls	2.7 mL/ vial	processed human plasma negative and positive for rubella IgM antibodies with preservatives	2–8°C	Until the expiration date on the vial or onboard–8 hours.

* See *Materials Required but Not Provided*

CAUTION! POTENTIAL BIOHAZARD: Contains human source material. While each human serum or plasma donor unit used in the manufacture of this product was tested by FDA-approved methods and found nonreactive for hepatitis B surface antigen (HBsAg), antibody to hepatitis C (HCV), and antibody to HIV-1/2, all products manufactured using human source material should be handled as potentially infectious. Because no test method can offer complete assurance that hepatitis B or C viruses, HIV, or other infectious agents are absent, these products should be handled according to established good laboratory practices.[6-8]

CAUTION: This device contains material of animal origin and should be handled as a potential carrier and transmitter of disease.

NOTE: Sodium azide can react with copper and lead plumbing to form explosive metal azides. On disposal, flush reagents with a large volume of water to prevent the buildup of azides, if disposal in a drain is in compliance with federal, state, and local requirements.

For *in vitro* diagnostic use.

Loading Reagents

Ensure that the system has sufficient primary reagent packs. For detailed information about preparing the system, refer to the system operating instructions or to the online help system.

Mix all primary reagent packs by hand before loading them onto the system. Visually inspect the bottom of the reagent pack to ensure that all particles are dispersed and resuspended. For detailed information about preparing the reagents for use, refer to Appendix C, *Handling Reagents*.

Load the ReadyPack primary reagent packs in the primary reagent compartment using the arrows on the packs as a placement guide. The system automatically mixes the primary reagent packs to maintain homogeneous suspension of the reagents. Load the Multi-Diluent 2 ancillary reagent pack in the ancillary reagent entry. For detailed information about loading reagents, refer to the system operating instructions or to the online help system.

NOTE: The Low and High Calibrators provided in this kit are matched to the ReadyPack primary reagent pack. Do not mix calibrator lots with different lots of reagent packs.

Onboard Stability and Calibration Interval

Onboard Stability	Calibration Interval
28 days	14 days

Additionally, the ADVIA Centaur Rubella M assay requires a two-point calibration:

- when changing lot numbers of primary reagent packs
- when replacing system components
- when quality control results are repeatedly out of range

NOTE:

- Discard reagent packs at the end of the onboard stability interval.
- Do not use reagents beyond the expiration date.

Calibration

For detailed information about entering calibration values, refer to the system operating instructions or to the online help system.

Using Barcode Labels

Calibrator barcode labels are lot-number specific. Do not use barcode labels from one lot of calibrators with any other lot of calibrators.

Use the ADVIA Centaur Rubella M Calibrator barcode labels to identify the Low and High Calibrator sample cups when performing the ADVIA Centaur Rubella M assay. Place the barcode label on the sample cup so that the readable characters on the side of the label are vertical on the sample cup.

Performing a Calibration

Each lot of calibrators contains a Calibrator Assigned Value card to facilitate entering the calibration values on the system. Enter the values using the barcode scanner or the keyboard.

NOTE: This procedure uses calibrator volumes sufficient to measure each calibrator in duplicate.

1. Schedule the calibrators to the worklist.
2. Label two sample cups with calibrator barcode labels: one for the low and another for the high.

NOTE: Each drop from the calibrator vial is approximately 50 µL.

3. Gently mix the Low and High Calibrators and dispense at least 4 to 5 drops into the appropriate sample cups.
4. Load the sample cups in a rack.
5. Place the rack in the sample entry queue.
6. Ensure that the assay and ancillary reagents are loaded.
7. Start the entry queue, if required.

NOTE: Dispose of any calibrator remaining in the sample cups after 8 hours. Do not refill sample cups when the contents are depleted; if required, dispense fresh calibrators.

Quality Control

For quality control of the ADVIA Centaur Rubella M assay, use ADVIA Centaur Rubella M quality control material. Refer to the Expected Value card for the suggested expected values specific for the lot number of the positive and negative controls.

Using Barcode Labels

Control barcode labels are lot-number specific. Do not use barcode labels from one lot of controls with any other lot of controls.

Use the ADVIA Centaur Rubella M quality control barcode labels to identify the positive and negative sample cups when performing the ADVIA Centaur Rubella M assay. Place the barcode label on the sample cup so that the readable characters on the side of the label are vertical on the sample cup.

Performing Quality Control

For detailed information about entering quality control values, refer to the system operating instructions or to the online help system.

To monitor system performance and chart trends, as a minimum requirement, quality control samples should be assayed on each workshift that samples are analyzed. Quality control samples should also be assayed when performing a two-point calibration. Treat all quality control samples the same as patient samples.

NOTE: This procedure uses control volumes sufficient to measure each control in duplicate.

1. Schedule the quality control samples to the worklist.
2. Label two sample cups with quality control barcode labels: one for the positive and another for the negative.

NOTE: Each drop from the control vial is approximately 50 µL.

3. Gently mix the quality control materials and dispense at least 4 to 5 drops into the appropriate sample cups.
4. Load the sample cups in a rack.
5. Place the rack in the sample entry queue.
6. Ensure that the assay reagents are loaded.
7. Start the entry queue, if required.

NOTE: Dispose of any quality control materials remaining in the sample cups after 8 hours. Do not refill sample cups when the contents are depleted; if required, dispense fresh quality control materials.

Taking Corrective Action

If the quality control results do not fall within the Expected Values or within the laboratory's established values, do not report results. Take the following actions:

- Verify that the materials are not expired.
- Verify that required maintenance was performed.
- Verify that the assay was performed according to the instructions for use.
- Rerun the assay with fresh quality control samples.
- If necessary, contact your local technical support provider or distributor for assistance.

Sample Volume

This assay requires 20 µL of sample for a single determination. This volume does not include the unusable volume in the sample container or the additional volume required when performing duplicates or other tests on the same sample. For detailed information about determining the minimum required volume, refer to *Sample Volume Requirements* in the *ADVIA Centaur Reference Manual.*

Assay Procedure

For detailed procedural information, refer to the system operating instructions or to the online help system.

Procedural Notes

Disposal

Dispose of hazardous or biologically contaminated materials according to the practices of your institution. Discard all materials in a safe and acceptable manner, and in compliance with all federal, state, and local requirements.

Interpretation of Results

For detailed information about how the system calculates results, refer to the system operating instructions or to the online help system.

The system reports rubella IgM antibody results in Index Values and as reactive (positive), equivocal, or nonreactive (negative).

- Samples with a calculated value of less than 0.80 Index Value are considered negative for IgM antibodies to rubella virus.
- Samples with a calculated value greater than or equal to 0.80 Index Value and less than or equal to 0.99 Index Value are considered equivocal and must be repeated. If the results are equivocal again, then a second specimen should be obtained and tested.
- Samples with a calculated value greater than or equal to 1.00 Index Value are considered positive for IgM antibodies to rubella virus.
- The cutoff for the ADVIA Centaur Rubella M assay was verified based on results of Receiver-Operator characteristics (ROC) Curve and positive/negative predictive values generated from the results of the clinical studies.
- Sample results are invalid and must be repeated if the controls are out of range.

Limitations

The following information pertains to limitations of the assay:

- The ADVIA Centaur Rubella M assay is limited to the detection of IgM antibodies to rubella virus in human serum or plasma.
- Specimens taken early during the acute phase of infection may not contain detectable levels of IgM antibody to rubella virus. A negative result for IgM antibodies to rubella virus does not preclude a recent primary infection.
- In the absence of clinical symptoms or known exposure, a diagnosis of a primary rubella infection should not be based on a positive result alone. The specimen should be confirmed using another method before making the diagnosis.

- Do not use heat inactivated specimens.
- Do not use specimens with obvious microbial contamination.
- The performance of the ADVIA Centaur Rubella M assay has not been established with cord blood, neonatal specimens, cadaver specimens, or body fluids other than serum or plasma, such as saliva, urine, amniotic, or pleural fluids.
- The performance of the assay has not been established for populations of immunocompromised or immunosuppressed patients.

Serum specimens that are . . .	*Demonstrate ≤ 10% change in results . . .*
hemolyzed	up to 500 mg/dL of hemoglobin
lipemic	up to 1000 mg/dL of triglycerides
icteric	up to 60 mg/dL of conjugated bilirubin up to 40 mg/dL of unconjugated bilirubin
hypo/hyperproteinemia	between 3–12 g/dL of protein
hypergammaglobulinemia	up to 3 mg/mL of immunoglobulin M

Expected Values

The incidence of IgM antibody to the rubella virus varies among populations. Data was obtained on 950 samples from prenatal women and random individuals. Of these samples, 11 (1.1%) were positive, 12 (1.3%) were equivocal, and 927 (97.6%) were negative.

As with all *in vitro* diagnostic assays, each laboratory should determine its own reference range(s) for the diagnostic evaluation of patient results.[9]

Population	*N*	*Negative*	*Equivocal*	*Positive*
Prenatal women	585	576 (98.4%)	5 (0.9%)	4 (0.7%)
Random individuals	365	351 (96.2%)	7 (1.9%)	7 (1.9%)

396

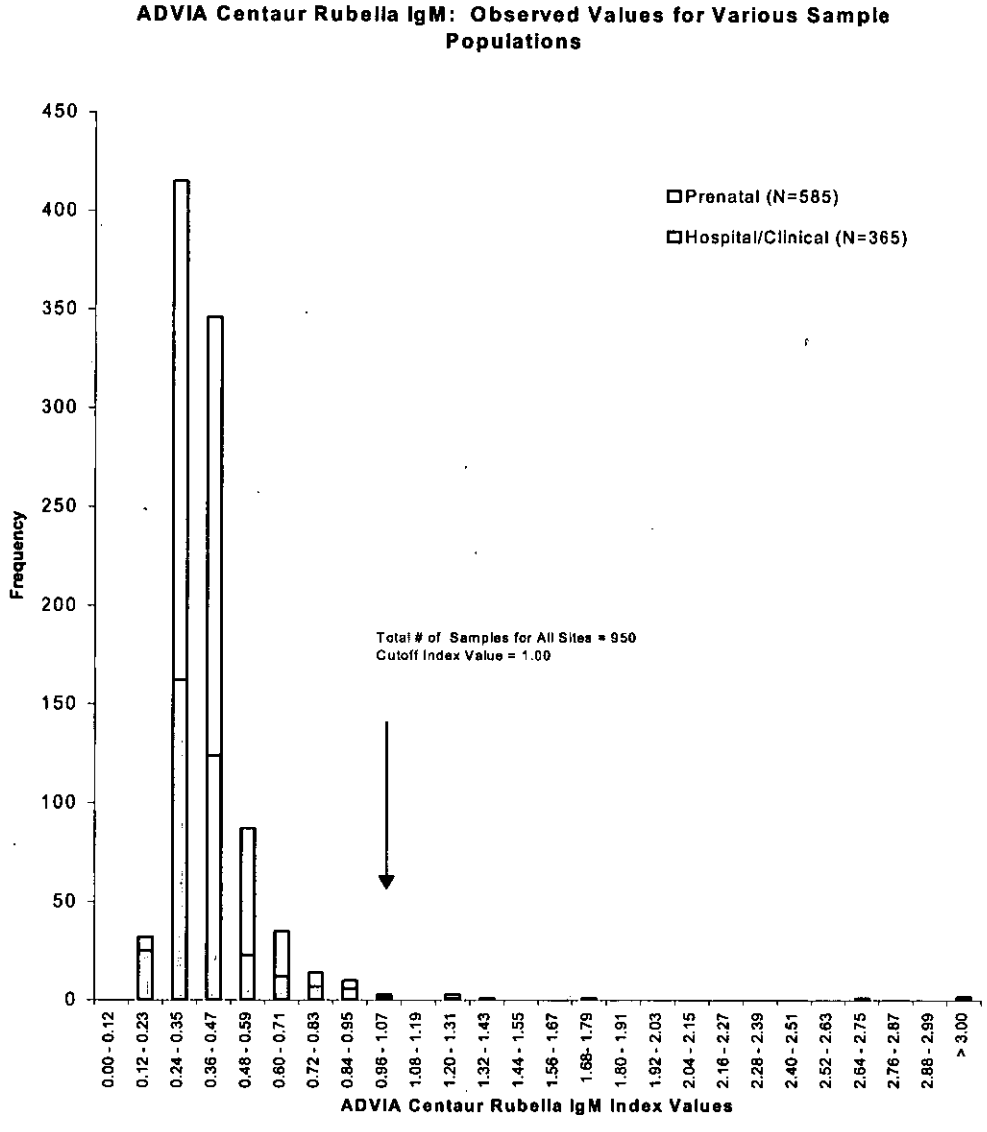

Performance Characteristics

Sensitivity and Specificity

Relative Agreement

The presence of rubella IgM antibody in 1054 frozen and fresh specimens was evaluated at three U.S. sites using the ADVIA Centaur Rubella M assay and a commercially available rubella IgM EIA. Prenatal, random hospital, and clinical specimens were obtained from the mid-Atlantic and Midwest regions of the United States as well as Canada and Germany. Of the 1054 specimens tested, 13 were equivocal by the ADVIA Centaur Rubella M assay. Discordant results were found on 18 specimens. Further testing was done on the discordant samples using other commercially available tests for rubella IgM.

Relative Sensitivity

Using the alternative method, 112/1054 tested positive for rubella IgM antibody. Of the specimens that tested positive, 1 was equivocal, 101 were positive, and 10 were negative using the ADVIA Centaur Rubella M assay. The relative sensitivity was 91.0%.

397

Relative Specificity

Using the alternative method, 932/1054 tested negative for rubella IgM antibody. Of the specimens that tested negative, 11 were equivocal, 913 were negative, and 8 were positive using the ADVIA Centaur Rubella M assay. The relative specificity was 99.1%.

NOTE: Samples giving equivocal results were not included in the calculation of relative sensitivity, relative specificity, and relative agreement.

Please be advised that 'relative' refers to the comparison of this assay's results to that of a similar assay. There was not an attempt made to correlate the assay's results with disease presence or absence. No judgment can be made on the comparison assay's accuracy to predict disease.

Relative Sensitivity, Specificity, and Agreement Before Resolution of Discordant Samples

Site	N	Relative Sensitivity (%)	Relative Specificity (%)	Relative Agreement (%)
1	300	92.3 (48/52)	99.6 (242/243)	98.3 (290/295)
2	377	85.3 (29/34)	99.8 (335/336)	98.4 (364/370)
3	377	96.0 (24/25)	98.3 (336/342)	98.1 (360/367)
Total	1054	91.0 (101/111)	99.1 (913/921)	98.3 (1014/1032)

		Rubella IgM EIA			
		Positive	Equivocal	Negative	Total
ADVIA Centaur Rubella M	Positive	101	2	8	111
	Equivocal	1	1	11	13
	Negative	10	7	913	930
	Total	112	10	932	1054

Relative sensitivity = 90.99% (101/111) 95% Confidence Limits 84.06–95.59
Relative specificity = 99.13% (913/921) 95% Confidence Limits 98.30–99.62
Relative agreement = 98.26% (1014/1032) 95% Confidence Limits 97.26–98.96

Consensus Testing

Further analysis of the 18 specimens with discordant results was performed using an additional commercially available EIA for rubella IgM. Of the 10 samples that were negative by ADVIA Centaur and positive by EIA, 1 was equivocal, 3 were positive, and 6 were negative by consensus. Of the 8 that were positive by ADVIA Centaur and negative by EIA, 2 were positive and 6 were negative by consensus. Two of the 6 negative consensus specimens were positive by clinical symptoms and other methodology.

Precision

Reproducibility of the ADVIA Centaur Rubella M assay was determined as described in Clinical and Laboratory Standards Institute (CLSI, formerly NCCLS) protocol EP5-A2.[10] A 16-member panel of serum and plasma was assayed 2 times in 2 separate daily runs, over a period of 20 days (n = 80). The following results were obtained using 1 reagent lot and a stored calibration curve:

Panel Member	Sample Type	N	Mean Concentration (Index Value)	Within-run SD	Within-run % CV	Total† SD	Total† % CV
	Negative Control	80	0.18	0.04	NA*	0.07	NA
	Positive Control	80	1.16	0.04	3.4	0.06	5.5
1	Serum	80	0.21	0.04	NA	0.06	NA
2	EDTA	80	0.19	0.04	NA	0.07	NA
3	Heparin	80	0.19	0.04	NA	0.07	NA
4	Sodium citrate	80	0.18	0.04	NA	0.08	NA

398

Panel Member	Sample Type	N	Mean Concentration (Index Value)	Within-run SD	Within-run % CV	Total† SD	Total† % CV
5	Serum	80	1.04	0.04	4.3	0.07	6.3
6	EDTA	80	1.07	0.05	4.9	0.07	6.2
7	Heparin	80	1.04	0.04	4.2	0.06	6.2
8	Sodium citrate	80	1.10	0.03	2.9	0.06	5.5
9	Serum	80	1.13	0.04	3.7	0.06	5.5
10	EDTA	80	1.17	0.04	3.2	0.06	5.1
11	Heparin	80	1.16	0.04	3.7	0.07	5.8
12	Sodium citrate	80	1.21	0.04	3.3	0.06	4.9
13	Serum	80	2.21	0.07	3.4	0.11	5.1
14	EDTA	80	2.23	0.08	3.5	0.11	5.0
15	Heparin	80	2.27	0.08	3.4	0.13	5.5
16	Sodium citrate	80	2.37	0.06	2.7	0.12	5.2

* NA = Not Applicable.

† Includes within-run and run-to-run.

System reproducibility was determined by testing a 4-member panel with 3 reagent lots including 5 instruments and 3 sites over multiple days. The panel was assayed 3 times in each of 55 runs. The following results were obtained:

Panel Member	N	Mean Concentration (Index Value)	Within-run SD	Within-run % CV	Total† SD	Total† % CV
Negative Control	171	0.31	0.06	NA*	0.07	NA
Positive Control	171	1.54	0.06	5.22	0.11	7.58
1	170	0.33	0.06	NA	0.07	NA
2	171	1.47	0.09	6.00	0.11	7.58
3	171	1.92	0.08	3.98	0.09	5.60
4	168	2.65	0.23	4.21	0.16	6.20

* NA = Not Applicable.

† Includes within-run and run-to-run.

The reproducibility was also calculated for each individual site with each panel member. The following table summarizes the precision of three sites:

Rubella IgM Precision Summary by Site

Panel Member	Site Code	N	Mean Concentration (Index Value)	Within-run SD	Within-run % CV	Total† SD	Total† % CV
Negative	1	141	0.30	0.06	NA*	0.07	NA
Negative	2	15	0.45	0.07	NA	0.08	NA
Negative	3	15	0.33	0.04	NA	0.05	NA
Positive	1	141	1.54	0.06	4.2	0.09	5.8
Positive	2	15	1.59	0.08	5.2	0.09	5.5
Positive	3	15	1.51	0.05	3.1	0.06	3.9
1	1	140	0.31	0.06	NA	0.07	NA
1	2	15	0.50	0.09	NA	0.11	NA
1	3	15	0.36	0.02	NA	0.02	NA
2	1	141	1.44	0.09	6.5	0.12	8.1
2	2	15	1.66	0.07	4.4	0.09	5.6
2	3	15	1.57	0.04	2.8	0.08	5.1
3	1	141	1.90	0.08	4.1	0.12	6.3
3	2	15	2.07	0.07	3.3	0.09	4.4
3	3	15	1.95	0.07	3.4	0.13	6.4

399

Panel Member	Site Code	N	Mean Concentration (Index Value)	Within-run SD	Within-run % CV	Total † SD	Total † % CV
4	1	141	2.60	0.11	4.4	0.17	6.6
4	2	12	2.93	0.10	3.4	0.10	3.4
4	3	15	2.87	0.09	3.2	0.12	4.3

* NA = Not Applicable.

† Includes within-run and run-to-run.

Evaluation of Potential Interfering Disease States

To further evaluate the specificity of the ADVIA Centaur Rubella M assay, 107 specimens from individuals with the various disease states were tested. The rubella IgM status of the specimens was confirmed using an alternate method. The results are shown in the following table:

Disease State	Rubella IgM Status by Alternate Method	ADVIA Centaur Rubella M Assay Result < 1.00 Index Value	ADVIA Centaur Rubella M Assay Result ≥ 1.00 Index Value
Cytomegalovirus	Negative	9	0
	Positive	0	1
Epstein-Barr virus	Negative	9	0
	Positive	0	0
Herpes simplex virus	Negative	10	0
	Positive	0	0
Influenza vacinees	Negative	10	0
	Positive	0	0
Measles virus	Negative	4	0
	Positive	0	6
Parvovirus B19	Negative	10	0
	Positive	0	0
Syphilis	Negative	10	0
	Positive	0	0
Varicella zoster virus	Negative	8	0
	Positive	0	0
Multiple myeloma	Negative	10	0
	Positive	0	0
Rheumatoid factor	Negative	10	0
	Positive	0	0
ANA	Negative	10	0
	Positive	0	0

Standardization

The ADVIA Centaur Rubella M assay standardization is based upon the relative clinical agreement with commercially available Rubella M assays (see *Performance Characteristics*). Assigned values for calibrations and controls are traceable to this standardization.

Technical Assistance

For customer support, contact your local technical support provider or distributor.

www.siemens.com/diagnostics

400

References

1. Armstrong AS, Safford JW, Holbert DN, Mushahra IK. Congenital diseases of microbiological origin. In: The Immunoassay Handbook: Applications. Edited by David Wood. New York: Stockton Press, 1994:499–501.
2. Thomas HIJ, Morgan-Capner P, Roberts A, Hesketh L. Persistent rubella-specific IgM reactivity in the absence of recent primary rubella and rubella reinfection. *Journal of Medical Virology.* 1992;36:188-192.
3. Thomas HIJ, Barrett A, Hesketh LM, Wynne A, Morgan-Capner, P. Simultaneous IgM reactivity by EIA against more than one virus in measles, parvovirus B19 and rubella infection. *Journal of Clinical Virology.* 1999;14:107-118.
4. Cordoba P, Grutadauria S, Cuffini C, et al. Different affinity of monoclonal antibodies for conserved neutralizing epitopes on two strains of rubella virus. *Viral Immunity.* 1997;2:103–10.
5. Katow S, Minahara H, Fukushima, Yamaguchi Y. Molecular epidemiology of rubella by nucleotide sequences of the rubella virus E1 gene in three east Asian countries. *J Infect Dis.* 1997;176:602–16.
6. Centers for Disease Control. Update: Universal precautions for prevention of transmission of human immunodeficiency virus, hepatitis B virus and other bloodborne pathogens in healthcare settings. MMWR 1988;37:377-82, 387-8.
7. Clinical and Laboratory Standards Institute (formerly NCCLS). *Protection of Laboratory Workers From Occupationally Acquired Infections; Approved Guideline - Third Edition.* Wayne, PA: Clinical and Laboratory Standards Institute; 2005. NCCLS Document M29-A3.
8. Federal Occupational Safety and Health Administration, Bloodborne Pathogens Standard, 29 CFR 1910.1030.
9. Clinical and Laboratory Standards Institute (formerly NCCLS). *How to Define and Determine Reference Intervals in the Clinical Laboratory; Approved Guideline - Second Edition.* Wayne, PA: Clinical and Laboratory Standards Institute; 2000. NCCLS Document C28-A2.
10. Clinical and Laboratory Standards Institute (formerly NCCLS). *Evaluation of Precision Performance of Quantitative Measurement Methods; Approved Guideline - Second Edition.* Wayne, PA: Clinical and Laboratory Standards Institute; 2004. NCCLS Document EP5-A2.

ADVIA Centaur, ReadyPack, and ACS:180 are trademarks of Siemens Healthcare Diagnostics.

© 2010 Siemens Healthcare Diagnostics. All rights reserved.

US Pats 5,609,822; 5,656,426; 5,788,928

Origin: US

Siemens Healthcare Diagnostics Inc.
Tarrytown, NY 10591-5097 USA

EC REP Siemens Healthcare Diagnostics Ltd.
Sir William Siemens Sq.
Frimley, Camberley, UK GU16 8QD

Siemens Healthcare
Diagnostics Pty Ltd
885 Mountain Highway
Bayswater Victoria 3153
Australia

シーメンスヘルスケア・
ダイアグノスティクス株式会社
東京都品川区東五反田 3－20－14
Siemens Healthcare Diagnostics
輸入

401

402

T3

CE

Assay Summary

Sample Type	***Serum***
Sample Volume	***50 µL***
Calibrator	***A***
Sensitivity and Assay Range	***0.1 – 8 ng/mL (0.15 – 12.3 nmol/L)***

Contents

REF	Contents	Number of Tests
08427516 (110742)	5 ReadyPack® primary reagent packs containing ADVIA Centaur® T3 Lite Reagent and Solid Phase ADVIA Centaur T3 Master Curve card	400
or		
07974424 (110741)	1 ReadyPack primary reagent pack containing ADVIA Centaur T3 Lite Reagent and Solid Phase ADVIA Centaur T3 Master Curve card	80

For a definition of symbols used in product labeling, please refer to *Understanding the Symbols* in Appendix D.

Intended Use

For *in vitro* diagnostic use in the quantitative determination of triiodothyronine (T_3) in serum using the ADVIA Centaur and ADVIA Centaur XP systems.

Materials Required But Not Provided

REF	Description	Contents
03147078 (672180)	Calibrator A	6 vials of low calibrator CAL L 6 vials of high calibrator CAL H
or		
08860910 (672170)	Calibrator A	2 vials of low calibrator CAL L 2 vials of high calibrator CAL H
01514596 (110329)	ADVIA Centaur T3/T4/VB12 Ancillary Reagent ANC	6 ReadyPack ancillary reagent packs containing 25 mL/pack
or		
03644012 (110328)	ADVIA Centaur T3/T4/VB12 Ancillary Reagent ANC	2 ReadyPack ancillary reagent packs containing 25 mL/pack

403

Optional Reagents

REF	Description	Contents
06998311 (672207)	T3 Diluent [en]	10 mL/vial
672419	T3 Master Curve Material	8 x 1 mL

Summary and Explanation of the Test

Triiodothyronine (3,5,3'-L-triiodothyronine, T_3) is a hormone that originates from direct thyroid synthesis and secretion (approximately 20%) and from peripheral conversion of T_4 to T_3 (approximately 80%).[1] T_3 is secreted into the circulation in response to the pituitary hormone TSH (thyroid stimulating hormone). The secretion of T_3 is regulated by a negative feedback mechanism involving the thyroid gland, pituitary gland, and hypothalamus.[1,2] Although serum levels of T_3 are small, it has a greater physiological potency than T_4.[1,2]

In the circulation, 99.7% of T_3 is reversibly bound to transport proteins, primarily thyroxine binding globulin (TBG) and to a lesser extent albumin and thyroxine binding prealbumin (TBPA). Unbound or free T_3 is metabolically active and bound T_3 is metabolically inactive, acting as a reserve for free T_3.[3]

TBG concentrations remain relatively constant in healthy individuals. However, pregnancy, excess estrogens, androgens, anabolic steroids, and glucocorticoids are known to alter TBG levels and may cause false thyroid values for thyroid function tests. T_3 levels in these situations may not accurately reflect thyroid status.

Primary malfunction of the thyroid gland may result in excessive (hyper) or below normal (hypo) release of T_3 or T_4. In addition, as thyroid function is directly affected by TSH, malfunction of the pituitary or the hypothalamus influences the thyroid gland activity. Disease in any portion of the thyroid-pituitary-hypothalamus system may influence the levels of T_3 and T_4 in the blood.

Diagnostically, T_3 concentration is more sensitive to certain thyroid conditions than T_4. While T_4 levels are a sensitive (and superior) indicator of hypothyroidism, T_3 blood levels better define hyperthyroidism.[4,5]

Because T_3 concentration in serum changes faster and more markedly than T_4, the T_3 level is also an excellent indicator of the ability of the thyroid to respond to both stimulatory and suppressive tests. Under conditions of strong thyroid stimulation, the T_3 level offers a good estimation of thyroidal reserve as well.[5]

Assay Principle

The ADVIA Centaur T3 assay is a competitive immunoassay using direct chemiluminescent technology. T_3 in the patient sample competes with a T_3 analog, which is covalently coupled to paramagnetic particles in the Solid Phase for a limited amount of acridinium ester-labeled monoclonal mouse anti-T_3 antibody in the Lite Reagent.

The system automatically performs the following steps:

- dispenses 50 µL of sample and 50 µL of T3/T4/VB12 Ancillary Reagent into a cuvette
- dispenses 100 µL of Lite Reagent and 300 µL of Solid Phase and incubates for 7.5 minutes at 37°C
- separates, aspirates, and washes the cuvettes with reagent water[6]
- dispenses 300 µL each of Acid Reagent and Base Reagent to initiate the chemiluminescent reaction
- reports results according to the selected option, as described in the system operating instructions or in the online help system

404

An inverse relationship exists between the amount of T_3 present in the patient sample and the amount of relative light units (RLUs) detected by the system.

Specimen Collection and Handling

Serum is the recommended sample type for this assay.

The following recommendations for handling and storing blood samples are furnished by the Clinical and Laboratory Standards Institute (CLSI):[7]

- Collect all blood samples observing universal precautions for venipuncture.
- Allow samples to clot adequately before centrifugation.
- Keep tubes stoppered and upright at all times.
- Do not use samples that have been stored at room temperature for longer than 8 hours.
- Tightly cap and refrigerate specimens at 2° to 8°C if the assay is not completed within 8 hours.
- Freeze samples at or below -20°C if the sample is not assayed within 48 hours.
- Freeze samples only once and mix thoroughly after thawing.

Before placing samples on the system ensure that:

- Samples are free of fibrin or other particulate matter.
- Samples are free of bubbles.

Reagents

UP

Store the reagents upright at 2°–8°C.
Mix all primary reagent packs by hand before loading them onto the system. Visually inspect the bottom of the reagent pack to ensure that all particles are dispersed and resuspended. For detailed information about preparing the reagents for use, refer to Appendix C, *Handling Reagents*.

Reagent Pack	Reagent	Volume	Ingredients	Storage	Stability
ADVIA Centaur T3 ReadyPack primary reagent pack	Lite Reagent	8.0 mL/ reagent pack	monoclonal mouse anti-T_3 antibody (~60 ng/mL) labeled with acridinium ester in buffered saline with sodium azide (0.1%), sodium barbital, and ANS	2–8°C	until the expiration date on the pack label. For onboard stability, refer to *Onboard Stability and Calibration Interval.*
	Solid Phase	24.0 mL/ reagent pack	T_3 analog (~13.3 µg/mL) covalently coupled to paramagnetic particles in phosphate buffer with sodium azide (0.1%), sodium barbital, and ANS	2–8°C	until the expiration date on the pack label. For onboard stability, refer to *Onboard Stability and Calibration Interval.*
ADVIA Centaur T3/T4/VB12 ANC ReadyPack ancillary reagent pack	T3/T4/VB12 Ancillary Reagent	25.0 mL/ reagent pack	0.4N sodium hydroxide	2–8°C	until the expiration date on the pack label or 14 consecutive days after accessing the ancillary reagent pack
T3 DIL	T3 Diluent	10 mL/ vial	human plasma and sodium azide (0.1 %)	2-8°C	until expiration date on the vial label

405

NOTE: Sodium azide can react with copper and lead plumbing to form explosive metal azides. On disposal, flush reagents with a large volume of water to prevent the buildup of azides, if disposal into a drain is in compliance with federal, state, and local requirements.

R22
S28

Harmful! Harmful if swallowed. After contact with skin, wash immediately with plenty of soap and water. **Contains:** sodium azide; Lite Reagent, Solid Phase

R36/38
S26
S37/39

Irritant! Irritating to eyes and skin. In case of contact with eyes, rinse immediately with plenty of water and seek medical advice. Wear suitable gloves and eye/face protection. **Contains:** sodium hydroxide; Ancillary Reagent

CAUTION! POTENTIAL BIOHAZARD: Contains human source material. While each human serum or plasma donor unit used in the manufacture of this product was tested by FDA-approved methods and found nonreactive for hepatitis B surface antigen (HBsAg), antibody to hepatitis C (HCV), and antibody to HIV-1/2, all products manufactured using human source material should be handled as potentially infectious. Because no test method can offer complete assurance that hepatitis B or C viruses, HIV, or other infectious agents are absent, these products should be handled according to established good laboratory practices.[8-10]

CAUTION: This device contains material of animal origin and should be handled as a potential carrier and transmitter of disease.

For *In Vitro* Diagnostic Use.

Loading Reagents

Ensure that the system has sufficient primary and ancillary reagent packs. For detailed information about preparing the system, refer to the system operating instructions or to the online help system.

Mix all primary reagent packs by hand before loading them onto the system. Visually inspect the bottom of the reagent pack to ensure that all particles are dispersed and resuspended. For detailed information about preparing the reagents for use, refer to Appendix C, *Handling Reagents*.

Load the ReadyPack reagent packs in the primary reagent area using the arrows as a placement guide. The system automatically mixes the primary reagent packs to maintain homogeneous suspension of the reagents. Load the T3/T4/VB12 Ancillary Reagent ReadyPack reagent pack in the ancillary reagent entry. For detailed information about loading reagents, refer to the system operating instructions or to the online help system.

Onboard Stability and Calibration Interval

Onboard Stability	Calibration Interval
28 days	28 days

Additionally, the ADVIA Centaur T3 assay requires a two-point calibration:

- when changing lot numbers of primary reagent packs
- when replacing system components
- when quality control results are repeatedly out of range

NOTE:

- Discard the primary reagent packs at the end of the onboard stability interval.
- Do not use reagents beyond the expiration date.

406

Master Curve Calibration

The ADVIA Centaur T3 assay requires a Master Curve calibration when using a new lot number of Lite Reagent and Solid Phase. For each new lot number of Lite Reagent and Solid Phase, use the barcode reader or keyboard to enter the Master Curve values on the system. The Master Curve card contains the Master Curve values. For detailed information about entering calibration values, refer to the system operating instructions or to the online help system.

Quality Control

For detailed information about entering quality control values, refer to the system operating instructions or to the online help system.

To monitor system performance and chart trends, as a minimum requirement, two levels of quality control material should be assayed on each day that samples are analyzed. Quality control samples should also be assayed when performing a two-point calibration. Treat all quality control samples the same as patient samples.

Siemens Healthcare Diagnostics recommends the use of commercially available quality control materials with at least 2 levels (low and high). A satisfactory level of performance is achieved when the analyte values obtained are within the Acceptable Control Range for the system or within your range, as determined by an appropriate internal laboratory quality control scheme.

If the quality control results do not fall within the Expected Values or within the laboratory's established values, do not report results. Take the following actions:

- Verify that the materials are not expired.
- Verify that required maintenance was performed.
- Verify that the assay was performed according to the instructions for use.
- Rerun the assay with fresh quality control samples.
- If necessary, contact your local technical support provider or distributor for assistance.

Sample Volume

This assay requires 50 µL of sample for a single determination. This volume does not include the unusable volume in the sample container or the additional volume required when performing duplicates or other tests on the same sample. For detailed information about determining the minimum required volume, refer to *Sample Volume Requirements* in the *ADVIA Centaur Reference Manual.*

Assay Procedure

For detailed procedural information, refer to the system operating instructions or to the online help system.

Procedural Notes

Calculations

For detailed information about how the system calculates results, refer to the system operating instructions or to the online help system.

The system reports serum T_3 results in ng/mL (mass units) or nmol/L (SI units), depending on the units defined when setting up the assay. The conversion formula is 1 ng/mL = 1.54 nmol/L.

407

Dilutions

- Serum samples with T_3 levels greater than 8 ng/mL (12.3 nmol/L) must be diluted and retested to obtain accurate results.
- The system does not run onboard dilutions for the ADVIA Centaur T3 assay. Use T3 Diluent to dilute samples. Prepare manual dilutions.
- If dilution is required, use T3 Diluent to manually dilute patient samples, and then load the diluted sample in the sample rack, replacing the undiluted sample.
- Ensure that results are mathematically corrected for dilution. If a dilution factor is entered when scheduling the test, the system automatically calculates the result.

Disposal

Dispose of hazardous or biologically contaminated materials according to the practices of your institution. Discard all materials in a safe and acceptable manner, and in compliance with all federal, state, and local requirements.

Limitations

Heterophilic antibodies in human serum can react with reagent immunoglobulins, interfering with *in vitro* immunoassays.[11] Patients routinely exposed to animals or to animal serum products can be prone to this interference and anomalous values may be observed. Additional information may be required for diagnosis.

Serum specimens that are . . .	Have an insignificant effect on the assay up to . . .
hemolyzed	250 mg/dL of hemoglobin
lipemic	1000 mg/dL of triglycerides
icteric	20 mg/dL of bilirubin

Expected Results

The expected results for the ACS:180® T3 assay were previously established. Data was obtained on serum samples from 146 clinically diagnosed euthyroid patient samples. Ninety-five percent of the T_3 values for these individuals fell in the range of 0.60 to 1.81 ng/mL (0.92 to 2.79 nmol/L). A subsequent study of 171 samples was run to confirm the expected results.

Clinical Condition	Mean (ng/mL)	Mean (nmol/L)
Euthyroid	0.60–1.81	0.92–2.79
Hypothyroid	less than 0.60	less than 0.92
Hyperthyroid	greater than 1.81	greater than 2.79

These results were confirmed for the ADVIA Centaur T3 assay by analyzing 335 samples in the range of 0.25 to 7.69 ng/mL (0.39 to 11.84 nmol/L). Refer to *Method Comparison*.

As with all diagnostic assays, each laboratory should determine its own reference range(s) for the diagnostic evaluation of patient results.[12]

Performance Characteristics

Specificity

The cross-reactivity of the ADVIA Centaur T3 assay with a substance can be expressed as the ratio of

- the amount of T_3 required to displace 50% of the maximally bound T3 Solid Phase from the labeled anti-T_3, and

- the amount of the cross-reactant to give the same 50% displacement

Cross-reactant	% Cross-reactivity
L-Thyroxine	0.24
D-Thyroxine	0.57
D-Triiodothyronine	100
Diiodotyrosine	< 0.01
Monoiodotyrosine	< 0.01
Reverse Triiodothyronine	< 0.01

The following substances were added to serum samples containing different levels of T_3. When tested against the appropriate control, the percent change was noted. The table below shows the mean percent change for each set of samples with T_3 values in the range 0.27 to 3.31 ng/mL (0.42 to 5.10 nmol/L).

Substance	Amount Added (mg/dL)	% Change
Propylthiouracil	4.0	+4.4
Methimazole	0.4	–1.2
Phenylbutazone	30.0	+2.6
Phenytoin	4.0	+2.1
Sodium salicylate	50.0	–0.5
Aspirin	50.0	–1.6

Interference testing was determined according to CLSI Document EP7-A2.[13]

Sensitivity and Assay Range

The ADVIA Centaur T3 assay measures T_3 concentrations up to 8 ng/mL (12.3 nmol/L) with a minimum detectable concentration (analytical sensitivity) of 0.1 ng/mL (0.15 nmol/L). Analytical sensitivity is defined as the concentration of T_3 that corresponds to the RLUs that are two standard deviations less than the mean RLUs of 20 replicate determinations of the T3 zero standard.

Method Comparison

For 335 samples in the range of 0.25 to 7.69 ng/mL (0.39 to 11.84 nmol/L), the relationship between the ADVIA Centaur T3 assay and the ACS:180 T3 assay is described by the equation:

ADVIA Centaur T3 = 1.03 (ACS:180 T3) – 0.04 ng/mL

Correlation coefficient (r) = 0.98

Dilution Recovery

Five human serum samples in the range of 4.90 to 7.78 ng/mL (7.55 to 11.98 nmol/L) of T_3 were diluted 1:2, 1:4, and 1:8 with T3 Diluent and assayed for recovery and parallelism. The recoveries ranged from 90.4% to 116.2% with a mean of 99.8%.

Sample	Dilution	Observed (ng/mL)	Expected (ng/mL)	Observed (nmol/L)	Expected (nmol/L)	Recovery %
1	—	7.67		11.81		
	1:2	3.84	3.84	5.91	5.91	100.0
	1:4	1.84	1.92	2.83	2.96	96.1
	1:8	0.90	0.96	1.39	1.48	93.8
	Mean					96.6
2	—	5.51		8.49		
	1:2	2.83	2.75	4.36	4.24	102.9
	1:4	1.45	1.38	2.23	2.13	105.3
	1:8	0.80	0.69	1.23	1.06	116.2
	Mean					108.2

409

Sample	Dilution	Observed (ng/mL)	Expected (ng/mL)	Observed (nmol/L)	Expected (nmol/L)	Recovery %
3	—	4.90		7.55		
	1:2	2.45	2.45	3.77	3.77	100.1
	1:4	1.27	1.22	1.96	1.88	103.4
	1:8	0.70	0.61	1.08	0.94	114.8
	Mean					106.1
4	—	6.35		9.78		
	1:2	2.87	3.18	4.42	4.90	90.4
	1:4	1.44	1.59	2.22	2.45	90.4
	1:8	0.83	0.79	1.28	1.22	104.3
	Mean					95.0
5	—	7.78		11.98		
	1:2	3.59	3.89	5.53	5.99	92.4
	1:4	1.81	1.94	2.79	2.99	93.0
	1:8	0.91	0.97	1.40	1.49	94.1
	Mean					93.1
Mean						**99.8**

Spiking Recovery

Varying amounts of T_3 were added to six samples with endogenous T_3 levels of 0.81 to 0.88 ng/mL (1.25 to 1.36 nmol/L). The recoveries ranged from 88.3% to 102.2% with a mean of 96.0%.

Sample	Amount Added (ng/mL)	Observed (ng/mL)	Amount Added (nmol/L)	Observed (nmol/L)	Recovery %
1	—	0.82	—	1.26	
	1.5	2.23	2.31	3.43	94.0
	3.0	3.53	4.62	5.16	90.3
	4.5	5.01	6.93	7.72	93.1
	6.0	6.53	9.24	10.06	95.2
	Mean				93.2
2	—	0.81	—	1.25	
	1.5	2.25	2.31	3.47	96.0
	3.0	3.78	4.62	5.82	99.0
	4.5	5.34	6.93	8.22	100.4
	6.0	6.67	9.24	10.27	97.8
	Mean				98.3
3	—	0.85	—	1.31	
	1.5	2.37	2.31	3.65	101.3
	3.0	3.91	4.62	6.02	102.0
	4.5	5.45	6.93	8.39	102.2
	6.0	6.95	9.24	10.70	101.7
	Mean				101.8
4	—	0.83	—	1.28	
	1.5	2.21	2.31	3.40	92.0
	3.0	3.51	4.62	5.41	89.3
	4.5	4.99	6.93	7.68	92.4
	6.0	6.13	9.24	9.44	88.3
	Mean				90.5

410

Sample	Amount Added (ng/mL)	Observed (ng/mL)	Amount Added (nmol/L)	Observed (nmol/L)	Recovery %
5	—	0.88	—	1.36	
	1.5	2.34	2.31	3.60	97.3
	3.0	3.78	4.62	5.82	96.7
	4.5	5.20	6.93	8.01	96.0
	6.0	6.55	9.24	10.09	94.5
	Mean				96.1
6	—	0.84	—	1.29	
	1.5	2.30	2.31	3.54	97.3
	3.0	3.66	4.62	5.63	94.0
	4.5	5.19	6.93	7.99	96.7
	6.0	6.56	9.24	10.10	95.3
	Mean				95.8
Mean					**96.0**

Precision

Three samples were assayed 3 times, in each of 24 runs, on 6 systems, (n = 72 for each sample), over a period of 8 days. The following results were obtained:

Mean (ng/mL)	Mean (nmol/L)	Within-run % CV	Run-to-run % CV	Total % CV
0.81	1.25	3.18	1.33	3.44
1.78	2.74	2.04	0.99	2.27
3.21	4.94	1.45	1.13	1.84

Traceability of Standardization

The ADVIA Centaur T3 assay is traceable to an internal standard manufactured using U.S.P. (United States Pharmacopeia) material. Assigned values for calibrators are traceable to this standardization.

Technical Assistance

For customer support, please contact your local technical support provider or distributor.

www.siemens.com/diagnostics

References

1. Fernandez-Ulloa M, Maxon HR. Thyroid. In: Kaplan LA, Pesce AJ, editors. Clinical chemistry: theory, analysis, and correlation. 2nd ed. St. Louis: CV Mosby, 1989. p.620–38.
2. Watts NB, Keffer JH. Practical endocrine diagnosis. 3rd ed. Philadelphia: Lea and Febiger, 1982. p.1–27, 77–96.
3. Chattoraj SC, Watts NB. Endocrinology. In: Tietz NW, editor. Fundamentals of clinical chemistry. 3rd ed. Philadelphia: WB Saunders, 1987. p.584–92.
4. Marsden P, McKerron CG. Serum triiodothyronine: concentration in the diagnosis of hyperthyroidism. Clin Endocrin 1975;4:183.
5. Larsen, PR. Triiodothyronine: review of recent studies of its physiology and pathology in man. Metabolism 1972;21:1073.
6. Reagent Water Technical Bulletin. Siemens Healthcare Diagnostics, 107060.
7. Clinical and Laboratory Standards Institute (formerly NCCLS). Procedures for the Handling and Processing of Blood Specimens; Approved Guideline - Third Edition. Wayne, PA: Clinical and Laboratory Standards Institute; 2004. NCCLS Document H18-A3.
8. Centers for Disease Control. 1988. Update: Universal precautions for prevention of transmission of human immunodeficiency virus, hepatitis B virus and other bloodborne pathogens in healthcare settings. MMWR, 37:377–82, 387–8.

411

9. Clinical and Laboratory Standards Institute (formerly NCCLS). Protection of Laboratory Workers From Occupationally Acquired Infections; Approved Guideline - Third Edition. Wayne, PA: Clinical and Laboratory Standards Institute; 2005. NCCLS Document M29-A3.
10. Federal Occupational Safety and Health Administration, Bloodborne Pathogens Standard, 29 CFR 1910.1030.
11. Boscato LM, Stuart MC. Heterophilic antibodies: a problem for all immunoassays. Clin Chem 1988;34:27–33.
12. Clinical and Laboratory Standards Institute (formerly NCCLS). How to Define and Determine Reference Intervals in the Clinical Laboratory; Approved Guideline - Second Edition. Wayne, PA: Clinical and Laboratory Standards Institute; 2000. NCCLS Document C28-A2.
13. Clinical and Laboratory Standards Institute (formerly NCCLS). Interference Testing in Clinical Chemistry; Approved Guideline - Second Edition. Wayne, PA: Clinical and Laboratory Standards Institute; 2005. NCCLS document EP7-A2.

ADVIA Centaur, ReadyPack, and ACS:180 are trademarks of Siemens Healthcare Diagnostics.
© 2008 Siemens Healthcare Diagnostics Inc. All rights reserved.
US Pats 4,745,181; 4,918,192; 5,110,932; 5,609,822; 5,788,928

Origin: US

Siemens Healthcare Diagnostics Inc.
Tarrytown, NY 10591-5097 USA

EC REP Siemens Healthcare Diagnostics Ltd.
Sir William Siemens Sq.
Frimley, Camberley, UK GU16 8QD

Siemens Healthcare
Diagnostics Pty Ltd
885 Mountain Highway
Bayswater Victoria 3153
Australia

シーメンスヘルスケア・
ダイアグノスティクス株式会社
東京都品川区東五反田 3－20－14
Siemens Healthcare Diagnostics
輸入

412

SIEMENS

CE

ADVIA Centaur®
ADVIA Centaur® XP
Immunoassay Systems

T4

Assay Summary

Sample Type	*Serum*
Sample Volume	*25 µL*
Calibrator	*A*
Sensitivity and Assay Range	*0.3–30 µg/dL (3.9–387 nmol/L)*

Contents

REF	Contents	Number of Tests
09236439 (110736)	5 ReadyPack® primary reagent packs containing ADVIA Centaur® T4 Lite Reagent and Solid Phase ADVIA Centaur and ADVIA Centaur CP T4 Master Curve Card	500
or		
08074354 (110735)	1 ReadyPack primary reagent pack containing ADVIA Centaur T4 Lite Reagent and Solid Phase ADVIA Centaur and ADVIA Centaur CP T4 Master Curve Card	100

Intended Use

For *in vitro* diagnostic use in the quantitative determination of thyroxine (T_4) in serum using the ADVIA Centaur and ADVIA Centaur XP systems.

Materials Required But Not Provided

REF	Description	Contents
04800735	Calibrator A	6 vials of low calibrator CAL L 6 vials of high calibrator CAL H
or		
04800646	Calibrator A	2 vials of low calibrator CAL L 2 vials of high calibrator CAL H
01514596 (110329)	ADVIA Centaur T3/T4/VB12 Ancillary Reagent ANC	6 ReadyPack ancillary reagent packs containing 25 mL/pack
or		
03644012 (110328)	ADVIA Centaur T3/T4/VB12 Ancillary Reagent ANC	2 ReadyPack ancillary reagent packs containing 25 mL/pack

Optional Reagents

REF	Description	Contents
04889086 (672202)	T4 Diluent [OTL]	10 mL/vial
672420	T4 Master Curve Material	6 x 1 mL

Summary and Explanation of the Test

Thyroxine (3,5,3',5'-L-tetraiodothyronine, T_4) is a hormone synthesized and secreted by the thyroid gland, and plays an important role in regulating metabolism. T_4 is secreted into the circulation in response to the pituitary hormone TSH (thyroid stimulating hormone). The secretion of T_4 is regulated by a negative feedback mechanism involving the thyroid gland, hypothalamus, and pituitary gland.[1,3]

In the circulation 99.95% of T_4 is reversibly bound to transport proteins, primarily thyroxine binding globulin (TBG) and to a lesser extent albumin and prealbumin. Unbound or free T_4 is metabolically active and bound T_4 is metabolically inactive, acting as a reserve.[3,4]

TBG concentrations remain reasonably constant in healthy individuals. However, pregnancy, excess estrogens, androgens, anabolic steroids, and glucocorticoids are known to alter TBG levels and may cause false thyroid values for thyroid function tests. Altered T_4 levels in these situations may not accurately reflect thyroid status.[1-4]

Primary malfunction of the thyroid gland may result in excessive (hyper) or below normal (hypo) release of T_4 or T_3. In addition, as thyroid function is directly affected by TSH, malfunction of the pituitary or the hypothalamus influences the thyroid gland activity. Disease in any portion of the thyroid-pituitary-hypothalamus system may influence the levels of T_4 and T_3 in the blood.

Assay Principle

The ADVIA Centaur T4 assay is a competitive immunoassay using direct chemiluminescent technology. T_4 in the patient sample competes with T_4, which is covalently coupled to paramagnetic particles in the Solid Phase, for a limited amount of acridinium ester-labeled monoclonal mouse anti-T_4 antibody in the Lite Reagent.

The system automatically performs the following actions:

- dispenses 25 µL of sample and 50 µL of T3/T4/VB12 Ancillary Reagent into a cuvette
- dispenses 250 µL of Solid Phase and 100 µL of Lite Reagent and incubates for 7.5 minutes at 37°C
- separates, aspirates, and washes the cuvettes with reagent water[5]
- dispenses 300 µL each of Acid Reagent and Base Reagent to initiate the chemiluminescent reaction
- reports results according to the selected option, as described in the system operating instructions or in the online help system

An inverse relationship exists between the amount of T_4 present in the patient sample and the amount of relative light units (RLUs) detected by the system.

414

Specimen Collection and Handling

Serum is the recommended sample type for this assay.

The following recommendations for handling and storing blood samples are furnished by the Clinical and Laboratory Standards Institute (CLSI, formerly NCCLS):

- Collect all blood samples observing universal precautions for venipuncture.
- Allow samples to clot adequately before centrifugation.
- Keep tubes stoppered and upright at all times.
- Do not use samples that have been stored at room temperature for longer than 8 hours.
- Tightly cap and refrigerate specimens at 2 to 8°C if the assay is not completed within 8 hours.
- Freeze samples at or below -20°C if the sample is not assayed within 48 hours.
- Freeze samples only once and mix thoroughly after thawing.

Before placing samples on the system, ensure that samples have the following characteristics:

- Samples are free of fibrin or other particulate matter.
- Samples are free of bubbles.

Reagents

Store the reagents upright at 2–8°C.
Mix all primary reagent packs by hand before loading them onto the system. Visually inspect the bottom of the reagent pack to ensure that all particles are dispersed and resuspended. For detailed information about preparing the reagents for use, see the system operator's guide.

Reagent Pack	Reagent	Volume	Ingredients	Storage	Stability
ADVIA Centaur T4 ReadyPack primary reagent pack	Lite Reagent	10.0 mL/ reagent pack	monoclonal mouse anti-T_4 antibody (~1 µg/mL) labeled with acridinium ester in sodium barbital buffer with protein stabilizers, ANS, EDTA, and sodium azide (0.1%)	2–8°C	until the expiration date on the pack label. For onboard stability, refer to *Onboard Stability and Calibration Interval.*
	Solid Phase	25.0 mL/ reagent pack	T_4 (~0.2 µg/mL) covalently coupled to paramagnetic particles in sodium barbital buffer with protein stabilizers, ANS, EDTA, and sodium azide (0.1%)	2–8°C	until the expiration date on the pack label. For onboard stability, refer to *Onboard Stability and Calibration Interval.*
ADVIA Centaur T3/T4/VB12 AMC ReadyPack ancillary reagent pack	T3/T4/VB12 Ancillary Reagent	25.0 mL/ reagent pack	0.4N sodium hydroxide	2–8°C	until the expiration date on the pack label or 14 consecutive days after accessing the ancillary reagent pack
T4 DIL	T4 Diluent	10 mL/ vial	human plasma and sodium azide (0.1 %)	2–8°C	until expiration date on the vial label

CAUTION: Sodium azide can react with copper and lead plumbing to form explosive metal azides. On disposal, flush reagents with a large volume of water to prevent the buildup of azides, if disposal into a drain is in compliance with federal, state, and local requirements.

R22 S28 **Harmful!** Harmful if swallowed. After contact with skin, wash immediately with plenty of soap and water. **Contains:** sodium azide; Lite Reagent, Solid Phase

415

R36/38 S26 S37/39 **Irritant!** Irritating to eyes and skin. In case of contact with eyes, rinse immediately with plenty of water and seek medical advice. Wear suitable gloves and eye/face protection. **Contains:** sodium hydroxide; Ancillary Reagent

CAUTION! POTENTIAL BIOHAZARD: Contains human source material. While each human serum or plasma donor unit used in the manufacture of this product was tested by FDA-approved methods and found nonreactive for hepatitis B surface antigen (HBsAg), antibody to hepatitis C (HCV), and antibody to HIV-1/2, all products manufactured using human source material should be handled as potentially infectious. Because no test method can offer complete assurance that hepatitis B or C viruses, HIV, or other infectious agents are absent, these products should be handled according to established good laboratory practices.[7-9]

CAUTION: This device contains material of animal origin and should be handled as a potential carrier and transmitter of disease.

Safety data sheets (MSDS/SDS) available on www.siemens.com/diagnostics.

For *in vitro* diagnostic use.

Loading Reagents

Ensure that the system has sufficient primary and ancillary reagent packs. For detailed information about preparing the system, refer to the system operating instructions or to the online help system.

CAUTION: Mix all primary reagent packs by hand before loading them onto the system. Visually inspect the bottom of the reagent pack to ensure that all particles are dispersed and resuspended. For detailed information about preparing the reagents for use, see the system operator's guide.

Load the ReadyPack reagent packs in the primary reagent area using the arrows as a placement guide. The system automatically mixes the primary reagent packs to maintain homogeneous suspension of the reagents. Load the T3/T4/VB12 Ancillary Reagent ReadyPack reagent pack in the ancillary reagent entry. For detailed information about loading reagents, refer to the system operating instructions or to the online help system.

Onboard Stability and Calibration Interval

The ADVIA Centaur T4 assay can be run using either the high or low volume usage option. If you use the low volume usage option, you will need to modify the test definition parameters for the assay. For detailed information about modifying test definitions, refer to the system operating instructions or to the online help system.

- High volume usage = use of more than one primary reagent pack within the Onboard Stability period indicated in the table for *High Volume Usage*.
- Low volume usage = use of less than one primary reagent pack within the Onboard Stability period indicated in the table for *High Volume Usage*.

High Volume Usage

Onboard Stability	Calibration Interval
4 days	28 days

Additionally, the ADVIA Centaur T4 assay requires a two-point calibration:

- when changing lot numbers of primary reagent packs
- when replacing system components
- when quality control results are repeatedly out of range

416

CAUTION:

- Discard the primary reagent packs at the end of the *High Volume Usage* onboard stability interval.
- Do not use reagents beyond the expiration date.

Low Volume Usage

NOTE: For low volume usage, load only one primary reagent pack on the system at a time. Perform a calibration every time you load a fresh primary reagent pack.

Onboard Stability	Calibration Interval
28 days	4 days

Additionally, the ADVIA Centaur T4 assay requires a two-point calibration:

- when changing lot numbers of primary reagent packs
- when replacing system components
- when quality control results are repeatedly out of range

CAUTION:

- Discard the primary reagent pack at the end of the *Low Volume Usage* onboard stability interval. When the Primary Reagent Stability option is set to **USE BEYOND**, the system does not display a flag when the reagent exceeds the onboard stability.
- Do not use reagents beyond the expiration date.

Master Curve Calibration

The ADVIA Centaur T4 assay requires a Master Curve calibration when using a new lot number of Lite Reagent and Solid Phase. For each new lot number of Lite Reagent and Solid Phase, use the barcode reader or keyboard to enter the Master Curve values on the system. The Master Curve card contains the Master Curve values. For detailed information about entering Master Curve values, refer to the system operating instructions or to the online help system.

Quality Control

Follow government regulations or accreditation requirements for quality control frequency.

For detailed information about entering quality control values, refer to the system operating instructions or to the online help system.

To monitor system performance and chart trends, as a minimum requirement, two levels of quality control material should be assayed on each day that samples are analyzed. Quality control samples should also be assayed when performing a two-point calibration. Treat all quality control samples the same as patient samples.

Siemens Healthcare Diagnostics recommends the use of commercially available quality control materials with at least 2 levels (low and high). A satisfactory level of performance is achieved when the analyte values obtained are within the Acceptable Control Range for the system or within your range, as determined by an appropriate internal laboratory quality control scheme.

If the quality control results do not fall within the Expected Values or within the laboratory's established values, do not report results. Take the following actions:

- Verify that the materials are not expired.
- Verify that required maintenance was performed.
- Verify that the assay was performed according to the instructions for use.

417

- Rerun the assay with fresh quality control samples.
- If necessary, contact your local technical support provider or distributor for assistance.

Sample Volume

This assay requires 25 µL of sample for a single determination. This volume does not include the unusable volume in the sample container or the additional volume required when performing duplicates or other tests on the same sample. For detailed information about determining the minimum required volume, refer to *Sample Volume Requirements* in the *ADVIA Centaur Reference Manual.*

Assay Procedure

For detailed procedural information, refer to the system operating instructions or to the online help system.

Procedural Notes

Calculations

For detailed information about how the system calculates results, refer to the system operating instructions or to the online help system.

The system reports T_4 results in µg/dL (mass units) or nmol/L (SI units), depending on the units defined when setting up the assay. The conversion formula is 1 µg/dL = 12.9 nmol/L.

Dilutions

The following information pertains to dilutions:

- Serum samples with T_4 levels greater than 30 µg/dL (387 nmol/L) must be diluted and retested to obtain accurate results.
- The system does not run onboard dilutions for the ADVIA Centaur T4 assay. Use T4 Diluent to dilute samples. Prepare manual dilutions.
- If dilution is required, use T4 Diluent to manually dilute patient samples, and then load the diluted sample on the sample tray, replacing the undiluted sample.
- Ensure that results are mathematically corrected for dilution. If a dilution factor is entered when scheduling the test, the system automatically calculates the result.

Disposal

Dispose of hazardous or biologically contaminated materials according to the practices of your institution. Discard all materials in a safe and acceptable manner, and in compliance with all federal, state, and local requirements.

Limitations

The anticonvulsant drug phenytoin may interfere with total and free T_4 levels due to competition for TBG binding sites.

418

Heterophilic antibodies in human serum can react with reagent immunoglobulins, interfering with in vitro immunoassays.[10] Patients routinely exposed to animals or to animal serum products can be prone to this interference and anomalous values can be observed. Additional information may be required for diagnosis.

Serum specimens that are . . .	Have an insignificant effect on the assay up to . . .
hemolyzed	500 mg/dL of hemoglobin
lipemic	1000 mg/dL of triglyceride
icteric	20 mg/dL of bilirubin

Expected Results

The expected results for the ACS:180® T4 assay were previously established. Data was obtained on serum samples from 150 apparently healthy individuals. Ninety-five percent of the T_4 values for these individuals fell in the range of 4.5 to 10.9 µg/dL (58.1 to 140.6 nmol/L), with a mean of 7.0 µg/dL (90.3 nmol/L) and overall range of 3.2 to 12.6 µg/dL (41.3 to 162.5 nmol/L). These results were confirmed for the ADVIA Centaur T4 assay by analyzing 258 samples in the range of 0.6 to 29.4 µg/dL (7.7 to 379.3 nmol/L). Refer to *Method Comparison*.

In addition, samples from a number of diagnosed hypothyroid, hyperthyroid, pregnant euthyroid, and sick euthyroid patients were included in the study.* The means and ranges of these populations were as follows:

Category	N	Mean (µg/dL)	95th Percentile (µg/dL)	Mean (nmol/L)	95th Percentile (nmol/L)
Hypothyroid	48	2.9	0.0–5.5	37.4	0.0–71.0
Hyperthyroid	44	14.1	10.8–19.1	181.9	139.3–246.4
Pregnant Euthyroid	22	8.5	6.4–10.7	109.6	82.6–138.0
Sick Euthyroid	26	5.3	1.9–13.3	68.4	24.5–171.6

* Data on file at Siemens, available upon request.

As with all diagnostic assays, each laboratory should determine its own reference range(s) for the diagnostic evaluation of patient results.[11]

Performance Characteristics

Specificity

The cross-reactivity of the ADVIA Centaur T4 assay with a substance can be expressed as the ratio of

- the amount of T_4 required to displace 50% of the T4 Solid Phase from the labeled anti-T_4, and
- the amount of the cross-reactant to give the same 50% displacement

Cross-reactant	% Cross-reactivity
Monoiodotyrosine	< 0.03
Diiodotyrosine	< 0.03
3,5-Diiodo-L-thyronine	< 0.03
D-Triiodothyronine	0.40
L-Triiodothyronine	1.2
D-Thyroxine	57.7
Reverse Triiodothyronine	2.7

419

The following substances were added to serum samples containing different levels of T_4. When tested against the appropriate control, the percent change was noted. The table below shows the mean percent change for each set of samples with T_4 values in the range of 4.94 to 18.65 µg/dL (63.7 to 240.6 nmol/L).

Substance	Amount Added (mg/dL)	% Change
Propylthiouracil	4.0	–3.3
Methimazole	0.4	+0.5
Phenylbutazone	15.0	+4.0
Phenytoin	20.0	–0.5
Sodium salicylate	50.0	+1.8
Aspirin	50.0	+1.5

Interference testing was determined according to NCCLS Document EP7-P.[12]

Sensitivity and Assay Range

The ADVIA Centaur T4 assay measures T4 concentrations up to 30 µg/dL (387 nmol/L) with a minimum detectable concentration (analytical sensitivity) of 0.3 µg/dL (3.9 nmol/L). Analytical sensitivity is defined as the concentration of T4 that corresponds to the RLUs that are two standard deviations less than the mean RLUs of 20 replicate determinations of the T4 zero standard.

Method Comparison

For 258 samples in the range of 0.6 to 29.4 µg/dL (7.7 to 379.3 nmol/L), the relationship between the ADVIA Centaur T4 assay and the ACS:180 T4 assay is described by the equation:

ADVIA Centaur T4 = 0.97 (ACS:180 T4) + 0.52 µg/dL

Correlation coefficient (r) = 0.99

Dilution Recovery

Six human serum samples in the range of 25.3 to 29.2 µg/dL (326.4 to 376.7 nmol/L) of T_4 were diluted 1:2, 1:4, and 1:8 with T4 Diluent and assayed for recovery and parallelism. The recoveries ranged from 90.0% to 111.4% with a mean of 96.8%.

Sample	Dilution	Observed (µg/dL)	Expected (µg/dL)	Observed (nmol/L)	Expected (nmol/L)	Recovery %
1	—	26.2		338.2		
	1:2	12.0	13.1	155.1	169.1	91.7
	1:4	6.3	6.6	81.3	84.5	96.1
	1:8	3.1	3.3	39.5	42.3	93.5
	Mean					93.8
2	—	29.0		373.7		
	1:2	13.3	14.5	170.9	186.9	91.5
	1:4	7.0	7.2	90.6	93.4	96.9
	1:8	3.4	3.6	44.4	46.7	95.0
	Mean					94.5
3	—	25.3		325.9		
	1:2	11.9	12.6	153.9	162.9	94.5
	1:4	6.4	6.3	83.1	81.5	102.0
	1:8	3.0	3.2	39.0	40.8	95.5
	Mean					97.3

420

Sample	Dilution	Observed (µg/dL)	Expected (µg/dL)	Observed (nmol/L)	Expected (nmol/L)	Recovery %
4	—	29.2		377.2		
	1:2	13.5	14.6	173.8	188.6	92.1
	1:4	7.3	7.3	94.7	94.3	100.4
	1:8	3.4	3.7	43.3	47.2	91.9
	Mean					94.8
5	—	27.8		359.1		
	1:2	12.5	13.9	161.6	179.6	90.0
	1:4	6.7	7.0	87.0	89.8	96.9
	1:8	3.2	3.5	41.4	44.9	92.3
	Mean					93.1
6	—	25.4		328.1		
	1:2	12.6	12.7	163.1	164.0	99.4
	1:4	7.1	6.4	91.3	82.0	111.4
	1:8	3.5	3.2	45.4	41.0	110.6
	Mean					107.1
Mean						**96.8**

Spiking Recovery

Varying amounts of T_4 were added to six samples with endogenous T_4 levels of 0 to 6.5 µg/dL (0 to 83.9 nmol/L). The recoveries ranged from 92.0% to 112.5% with a mean of 102.6%.

Sample	Amount Added (µg/dL)	Observed (µg/dL)	Amount Added (nmol/L)	Observed (nmol/L)	Recovery %
1	—	2.1	—	27.1	
	5	7.6	64.5	98.0	110.0
	10	11.5	129.0	148.4	94.0
	15	18.2	193.5	234.8	107.3
	20	21.7	258.0	279.9	98.0
	Mean				102.3
2	—	2.8	—	36.1	
	5	7.7	64.5	99.3	98.0
	10	12.4	129.0	160.0	96.0
	15	16.7	193.5	215.4	92.7
	20	22.7	258.0	292.8	99.5
	Mean				96.5
3	—	4.1	—	52.9	
	5	8.7	64.5	112.2	92.0
	10	13.9	129.0	179.3	98.0
	15	18.5	193.5	238.7	96.0
	20	24.9	258.0	321.2	104.0
	Mean				97.5
4	—	5.9	—	76.1	
	5	11.1	64.5	143.2	104.0
	10	16.6	129.0	214.1	107.0
	15	21.9	193.5	282.5	106.7
	20	28.4	258.0	366.4	112.5
	Mean				107.5

Sample	Amount Added (µg/dL)	Observed (µg/dL)	Amount Added (nmol/L)	Observed (nmol/L)	Recovery %
5	—	6.5	—	83.9	
	5	11.7	64.5	150.9	104.0
	10	16.9	129.0	218.0	104.0
	15	22.4	193.5	289.0	106.0
	20	28.3	258.0	365.1	109.0
	Mean				105.8
6	—	0.0	—	0.0	
	5	5.3	64.5	68.4	106.0
	10	10.4	129.0	134.2	104.0
	15	16.0	193.5	206.4	106.7
	20	21.5	258.0	277.4	107.5
	Mean				106.0
Mean					**102.6**

Precision

Three samples were assayed 3 times, in each of 24 runs, on 8 systems, (n = 72 for each sample), over a period of 9 days. The following results were obtained:

Mean (µg/dL)	Mean (nmol/L)	Within-run % CV	Run-to-run % CV	Total % CV
3.44	44.4	3.15	4.57	5.55
7.70	99.3	1.19	1.47	1.89
14.82	191.2	1.77	2.90	3.40

Traceability of Standardization

The ADVIA Centaur T4 assay is traceable to an internal standard manufactured using U.S.P. (United States Pharmacopeia) material. Assigned values for calibrators are traceable to this standardization.

Technical Assistance

For customer support, contact your local technical support provider or distributor.

www.siemens.com/diagnostics

422

References

1. Chen IW, Sperling MI. Thyroxine. In: Kaplan LA, Pesce AJ, editors. Clinical chemistry: theory, analysis, and correlation. 2nd ed. St. Louis: CV Mosby, 1989. p.956–9.
2. Fernandez-Ulloa M, Maxon HR. Thyroid. In: Kaplan LA, Pesce AJ, editors. Clinical chemistry: theory, analysis, and correlation. 2nd ed. St. Louis: CV Mosby, 1989. p.620–38.
3. Watts NB, Keffer JH. Practical endocrine diagnosis. 3rd ed. Philadelphia: Lea and Febiger, 1982. p.1–27, 77–96.
4. Chattoraj SC, Watts NB. Endocrinology. In: Tietz NW, editor. Fundamentals of clinical chemistry. 3rd ed. Philadelphia: WB Saunders, 1987. p.584–92.
5. Reagent Water Technical Bulletin. Siemens Healthcare Diagnostics, 107060.
6. Clinical and Laboratory Standards Institute (formerly NCCLS). *Procedures for the Handling and Processing of Blood Specimens; Approved Guideline - Third Edition.* Wayne, PA: Clinical and Laboratory Standards Institute; 2004. NCCLS Document H18-A3.
7. Centers for Disease Control. 1988. Update: Universal precautions for prevention of transmission of human immunodeficiency virus, hepatitis B virus and other bloodborne pathogens in healthcare settings. MMWR, 37:377–82, 387–8.
8. National Committee for Clinical Laboratory Standards. Protection of laboratory workers from instrument biohazards and infectious disease transmitted by blood, body fluids, and tissue; approved guideline. NCCLS Document M29-A. Wayne (PA): NCCLS; 1997 Dec. 90p.
9. Federal Occupational Safety and Health Administration, Bloodborne Pathogens Standard, 29 CFR 1910.1030.
10. Boscato LM, Stuart MC. Heterophilic antibodies: a problem for all immunoassays. *Clin Chem* 1988;34:27–33.
11. Clinical and Laboratory Standards Institute (formerly NCCLS). *How to Define and Determine Reference Intervals in the Clinical Laboratory; Approved Guideline - Second Edition.* Wayne, PA: Clinical and Laboratory Standards Institute; 2000. NCCLS Document C28-A2.
12. Clinical and Laboratory Standards Institute (formerly NCCLS). *Interference Testing in Clinical Chemistry; Approved Guideline - Second Edition.* Wayne, PA: Clinical and Laboratory Standards Institute; 2005. CLSI document EP7-A2.

ADVIA Centaur, ReadyPack, and ACS:180 are trademarks of Siemens Healthcare Diagnostics.

© 2011 Siemens Healthcare Diagnostics. All rights reserved.

US Pats 5,110,932; 5,609,822; 5,788,928

Origin: US

Siemens Healthcare Diagnostics Inc.
Tarrytown, NY 10591-5097 USA

EC REP Siemens Healthcare Diagnostics Ltd.
Sir William Siemens Sq.
Frimley, Camberley, UK GU16 8QD

Siemens Healthcare
Diagnostics Pty Ltd
885 Mountain Highway
Bayswater Victoria 3153
Australia

423

Understanding the Symbols

The following symbols may appear on the product labeling:

Symbol	Definition	Symbol	Definition
IVD	*In vitro* diagnostic medical device	REF	Catalog number
	Manufacturer	EC REP	Authorized Representative in the European Community
CE	CE Mark	CE 0088	CE Mark with identification number of notified body
	Consult instructions for use		Caution! Potential Biohazard
0°C	Do not freeze (> 0°C)	2°C 8°C	Temperature limitation (2–8°C)
2°C	Lower limit of temperature (≥ 2°C)	-10°C	Upper limit of temperature (≤ -10°C)
	Keep away from sunlight		Use by
UP	Store upright		Shake the reagent pack vigorously. Refer to *Loading Reagents* in the assay-specific ADVIA Centaur product instructions for detailed information.
LOT	Batch code	Σ XX	Contains sufficient for (n) tests
2010-01	Date format (year-month)	PRINTED WITH SOY INK	Printed with soy ink
	Green dot		Recycle

424

Testosterone (TSTO)

CE

Assay Summary

Sample Type	*Serum*
Sample Volume	*15 µL*
Calibrator	*E*
Sensitivity and Assay Range	*10–1500 ng/dL (0.35–52.1 nmol/L)*

Contents

REF	Contents	Number of Tests
05476206 (125363)	5 ReadyPack® primary reagent packs containing ADVIA Centaur® TSTO Lite Reagent, Solid Phase, and Probe Wash 5 ReadyPack ancillary reagent packs containing ADVIA Centaur TSTO Releasing Agent [REL] ADVIA Centaur TSTO Master Curve card	250
or		
07207660 (110782)	1 ReadyPack primary reagent pack containing ADVIA Centaur TSTO Lite Reagent, Solid Phase, and Probe Wash 1 ReadyPack ancillary reagent pack containing ADVIA Centaur TSTO Releasing Agent [REL] ADVIA Centaur TSTO Master Curve card	50

For a definition of symbols used in product labeling, refer to *Understanding the Symbols* in Appendix D of the Assay Guide.

Intended Use

For *in vitro* diagnostic use in the quantitative determination of total testosterone (bound and unbound) in serum using the ADVIA Centaur and ADVIA Centaur XP Systems.

Materials Required but Not Provided

REF	Description	Contents
04634762	Calibrator E	6 vials of low calibrator [CAL L] 6 vials of high calibrator [CAL H]
or		
04634452	Calibrator E	2 vials of low calibrator [CAL L] 2 vials of high calibrator [CAL H]
03395373	Ancillary Probe Wash 1 [APW 1]	2 ReadyPack ancillary reagent packs containing 25 mL per pack

Optional Reagents

REF	Description	Contents
05389133 (110315)	ADVIA Centaur Multi-Diluent 3 [M-DIL 3]	2 ReadyPack ancillary reagent packs containing 5 mL/pack
06223468 (672192)	Multi-Diluent 3 [M-DIL 3]	50 mL/vial
672408	TSTO Master Curve Material	7 x 1 mL

Summary and Explanation of the Test

Testosterone (4 androsten 17β-ol-3-one) is a C_{19} steroid hormone with a molecular weight of 288.4 daltons. Testosterone is the major androgen in males and is controlled by luteinizing hormone (LH). LH is released from the anterior pituitary exerting the primary control on testosterone production and acting directly on the Leydig cells in the testes. Testosterone stimulates adult maturation of external genitalia and secondary sex organs, and the growth of beard, axillary and pubic hair. In addition, testosterone has anabolic effects leading to increased linear growth, nitrogen retention, and muscular development. Clinical evaluation of serum testosterone, along with serum LH, assists in evaluation of hypogonadal males. Major causes of lowered testosterone in males include hypogonadotropic hypogonadism, testicular failure, hyperprolactinemia, hypopituitarism, some types of liver and kidney diseases, and critical illness.[1]

Testosterone levels are much lower in females compared to males. The major sources of testosterone in females are the ovaries, the adrenal glands, and the peripheral conversion of precursors, specifically the conversion of androstenedione to testosterone. In females, the normal levels of androgens may provide substrate for estrogen production. Increased serum testosterone levels in females may be indicative of polycystic ovary syndrome[2] and adrenal hyperplasia, among other conditions. The clinical manifestations of excess testosterone include infertility, hirsutism, amenorrhea, and obesity.[3,4]

Testosterone strongly binds to plasma proteins such as sex hormone-binding globulin (SHBG) or testosterone-estradiol-binding globulin (TeBG). Testosterone also binds with low affinity to CBG (cortisol-binding globulins) and albumin. Less than 2.5% of testosterone circulates unbound to plasma proteins.[4]

Assay Principle

The ADVIA Centaur Testosterone assay is a competitive immunoassay using direct chemiluminescent technology. Testosterone in the patient sample competes with acridinium ester-labeled testosterone in the Lite Reagent for a limited amount of polyclonal rabbit anti-testosterone antibody bound to monoclonal mouse anti-rabbit antibody, which is coupled to paramagnetic particles in the Solid Phase. The assay uses Testosterone Releasing Agent to release bound testosterone from the endogenous binding proteins in the sample.

The system automatically performs the following actions:

- dispenses 15 µL of sample and 50 µL of Releasing Agent into a cuvette
- washes the reagent probe with 100 µL of Probe Wash, if necessary
- dispenses 50 µL of Lite Reagent and 300 µL of Solid Phase and incubates for 5.0 minutes at 37°C
- separates, aspirates, and washes the cuvettes with reagent water[5]
- dispenses 300 µL each of Acid Reagent and Base Reagent to initiate the chemiluminescent reaction
- reports results according to the selected option, as described in the system operating instructions or in the online help system

An inverse relationship exists between the amount of testosterone present in the patient sample and the amount of relative light units (RLUs) detected by the system.

426

Specimen Collection and Handling

Serum is the recommended sample type for this assay.

The following recommendations for handling and storing blood samples are furnished by the Clinical and Laboratory Standards Institute (CLSI, formerly NCCLS):[6]

- Collect all blood samples observing universal precautions for venipuncture.
- Allow samples to clot adequately before centrifugation.
- Keep tubes stoppered and upright at all times.
- Do not use samples that have been stored at room temperature for longer than 8 hours.
- Tightly cap and refrigerate specimens at 2° to 8°C if the assay is not completed within 8 hours.
- Freeze samples at or below -20°C if the sample is not assayed within 48 hours.
- Freeze samples only once and mix thoroughly after thawing.

Before placing samples on the system, ensure that samples have the following characteristics:

- Samples are free of fibrin or other particulate matter.
- Samples are free of bubbles.

Reagents

Store the reagents upright at 2–8°C.
Mix all primary reagent packs by hand before loading them onto the system. Visually inspect the bottom of the reagent pack to ensure that all particles are dispersed and resuspended. For detailed information about preparing the reagents for use, refer to Appendix C, *Handling Reagents*.

Reagent Pack	Reagent	Volume	Ingredients	Storage	Stability
ADVIA Centaur TSTO ReadyPack primary reagent pack	Lite Reagent	2.5 mL/ reagent pack	acridinium ester-labeled testosterone (~3.2 ng/mL) in buffered saline with preservatives	2–8°C	until the expiration date on the pack label. For onboard stability, refer to *Onboard Stability and Calibration Interval.*
	Solid Phase	15.0 mL/ reagent pack	polyclonal rabbit anti-testosterone antibody (~0.03 µg/mL) bound to monoclonal mouse anti-rabbit antibody (~0.53 µg/mL) covalently coupled to paramagnetic particles in buffered saline with sodium azide (0.1%) and preservatives	2–8°C	until the expiration date on the pack label. For onboard stability, refer to *Onboard Stability and Calibration Interval.*
	Probe Wash	10.0 mL/ reagent pack	buffered saline with sodium azide (0.1%) and preservatives	2–8°C	until the expiration date on the pack label. For onboard stability, refer to *Onboard Stability and Calibration Interval*
ADVIA Centaur TSTO REL ReadyPack ancillary reagent pack	Releasing Agent	5.0 mL/ reagent pack	steroid releasing agent (~0.1 µg/mL) in buffered saline with sodium azide (0.1%) and preservatives	2–8°C	until the expiration date on the pack label. For onboard stability, refer to *Onboard Stability and Calibration Interval.*
ADVIA Centaur M-DIL 3 ReadyPack ancillary reagent pack	Multi-Diluent 3	5.0 mL/ reagent pack	human plasma with sodium azide (0.1%)	2–8°C	until the expiration date on the pack label or 28 consecutive days after accessing the ancillary reagent pack

Reagent Pack	Reagent	Volume	Ingredients	Storage	Stability
ADVIA Centaur APW 1 ReadyPack ancillary reagent pack*	Probe Wash	25.0 mL/ reagent pack	0.4 N sodium hydroxide	2–8°C	until the expiration date on the pack label or 14 consecutive days after accessing the ancillary reagent pack

R22 S28 **Harmful!** Harmful if swallowed. After contact with skin, wash immediately with plenty of soap and water. **Contains:** sodium azide; Solid Phase, Probe Wash, Releasing Agent

CAUTION! POTENTIAL BIOHAZARD: Contains human source material. While each human serum or plasma donor unit used in the manufacture of this product was tested by FDA-approved methods and found nonreactive for hepatitis B surface antigen (HBsAg), antibody to hepatitis C (HCV), and antibody to HIV-1/2, all products manufactured using human source material should be handled as potentially infectious. Because no test method can offer complete assurance that hepatitis B or C viruses, HIV, or other infectious agents are absent, these products should be handled according to established good laboratory practices.[7-9]

CAUTION: This device contains material of animal origin and should be handled as a potential carrier and transmitter of disease.

NOTE: Sodium azide can react with copper and lead plumbing to form explosive metal azides. On disposal, flush reagents with a large volume of water to prevent the buildup of azides, if disposal into a drain is in compliance with federal, state, and local requirements.

For *in vitro* diagnostic use.

Loading Reagents

Ensure that the system has sufficient primary and ancillary reagent packs. For detailed information about preparing the system, refer to the system operating instructions or to the online help system.

CAUTION: Mix all primary reagent packs by hand before loading them onto the system. Visually inspect the bottom of the reagent pack to ensure that all particles are dispersed and resuspended. For detailed information about preparing the reagents for use, refer to Appendix C, *Handling Reagents*.

Load the ReadyPack reagent packs in the primary reagent area using the arrows as a placement guide. The system automatically mixes the primary reagent packs to maintain homogeneous suspension of the reagents. Load the Testosterone Releasing Agent ReadyPack reagent pack in the ancillary reagent entry. For detailed information about loading reagents, refer to the system operating instructions or to the online help system.

If automatic dilution of a sample is required, load ADVIA Centaur Multi-Diluent 3 in the ancillary reagent entry.

CAUTION: The Testosterone Releasing Agent provided in this kit is matched to the Solid Phase and Lite Reagent. Do not mix Testosterone Releasing Agent lots with different lots of Solid Phase and Lite Reagent.

Onboard Stability and Calibration Interval

The ADVIA Centaur Testosterone assay can be run using either the high or low volume usage option. If you use the low volume usage option, you will need to modify the test definition parameters for the assay. For detailed information about modifying test definitions, refer to the system operating instructions or to the online help system.

- High volume usage = use of more than one primary reagent pack within the Onboard Stability period indicated in the table for *High Volume Usage*.
- Low volume usage = use of less than one primary reagent pack within the Onboard Stability period indicated in the table for *High Volume Usage*.

428

High Volume Usage

Onboard Stability	Calibration Interval
7 days	16 days

Additionally, the ADVIA Centaur Testosterone assay requires a two-point calibration:

- when changing lot numbers of primary reagent packs
- when replacing system components
- when quality control results are repeatedly out of range

CAUTION:

- Discard the primary and ancillary reagent packs at the end of the *High Volume Usage* onboard stability interval.
- Do not use reagents beyond the expiration date.

Low Volume Usage

NOTE: For low volume usage, load only one primary reagent pack on the system at a time. Perform a calibration every time you load a fresh primary reagent pack.

Onboard Stability	Calibration Interval
28 days	7 days

Additionally, the ADVIA Centaur Testosterone assay requires a two-point calibration:

- when changing lot numbers of primary reagent packs
- when replacing system components
- when quality control results are repeatedly out of range

CAUTION:

- Discard the primary and ancillary reagent packs at the end of the *Low Volume Usage* onboard stability interval. When the Primary Reagent Stability option is set to **USE BEYOND**, the system does not display a flag when the reagent exceeds the onboard stability.
- Do not use reagents beyond the expiration date.

Master Curve Calibration

The ADVIA Centaur Testosterone assay requires a Master Curve calibration when using a new lot number of Lite Reagent and Solid Phase. For each new lot number of Lite Reagent and Solid Phase, use the barcode reader or keyboard to enter the Master Curve values on the system. The Master Curve card contains the Master Curve values. For detailed information about entering calibration values, refer to the system operating instructions or to the online help system.

Quality Control

For detailed information about entering quality control values, refer to the system operating instructions or to the online help system.

To monitor system performance and chart trends, as a minimum requirement, two levels of quality control material should be assayed on each day that samples are analyzed. Quality control samples should also be assayed when performing a two-point calibration. Treat all quality control samples the same as patient samples.

Siemens Healthcare Diagnostics recommends the use of commercially available quality control materials with at least 2 levels (low and high). A satisfactory level of performance is achieved when the analyte values obtained are within the Acceptable Control Range for the system or within your range, as determined by an appropriate internal laboratory quality control scheme.

If the quality control results do not fall within the Expected Values or within the laboratory's established values, do not report results. Take the following actions:

- Verify that the materials are not expired.
- Verify that required maintenance was performed.
- Verify that the assay was performed according to the instructions for use.
- Rerun the assay with fresh quality control samples.
- If necessary, contact your local technical support provider or distributor for assistance.

Sample Volume

This assay requires 15 µL of sample for a single determination. This volume does not include the unusable volume in the sample container or the additional volume required when performing duplicates or other tests on the same sample. For detailed information about determining the minimum required volume, refer to *Sample Volume Requirements* in the *ADVIA Centaur Reference Manual.*

NOTE: The sample volume required to perform onboard dilution differs from the sample volume required to perform a single determination. Refer to the following information for the sample volume required to perform onboard dilutions:

Dilution	Sample Volume (µL)
1:5	40

Assay Procedure

For detailed procedural information, refer to the system operating instructions or to the online help system.

Procedural Notes

Calculations

For detailed information about how the system calculates results, refer to the system operating instructions or to the online help system.

The system reports serum testosterone results in ng/dL (common units) or nmol/L (SI units), depending on the units defined when setting up the assay. The conversion formula is 1 ng/dL = 0.0347 nmol/L.

Dilutions

- Serum samples with testosterone levels greater than 1500 ng/dL (52.1 nmol/L) must be diluted and retested to obtain accurate results.
- Patient samples can be automatically diluted by the system or prepared manually.

- For automatic dilutions, ensure that ADVIA Centaur Multi-Diluent 3 is loaded and set the system parameters as follows:

  Dilution point: ≤ 1500 ng/dL (52.1 nmol/L)

  Dilution factor: 5

  For detailed information about automatic dilutions, refer to the system operating instructions or to the online help system.
- Manually dilute the patient samples when patient results exceed the linearity of the assay using automatic dilution, or when laboratory protocol requires manual dilution.
- Use Multi-Diluent 3 to manually dilute patient samples, and then load the diluted sample in the sample rack, replacing the undiluted sample.
- Ensure that results are mathematically corrected for dilution. If a dilution factor is entered when scheduling the test, the system automatically calculates the result.

Disposal

Dispose of hazardous or biologically contaminated materials according to the practices of your institution. Discard all materials in a safe and acceptable manner, and in compliance with all federal, state, and local requirements.

Upon disposal of the primary reagent pack, excess Probe Wash reagent can remain in the reagent pack. Usage volume of the Probe Wash depends on the specific sample test sequence.

Limitations

Heterophilic antibodies in human serum can react with reagent immunoglobulins, interfering with *in vitro* immunoassays.[10] Patients routinely exposed to animals or to animal serum products can be prone to this interference and anomalous values may be observed. Additional information may be required for diagnosis.

Serum specimens that are . . .	Have an insignificant effect on the assay up to . . .
hemolyzed	500 mg/dL of hemoglobin
lipemic	1000 mg/dL of triglycerides
icteric	20 mg/dL of bilirubin

Expected Results

The expected results for the ACS:180® Testosterone assay were previously established. Data was obtained on serum samples from 401 apparently healthy individuals. The median age of the males was 34 years of age (range 19 to 71) and the median age of the females was 37 years (range 15 to 75 years). Based on a central 95% interval, the following reference ranges were established:

Category	N	Median (ng/dL)	Range (ng/dL)	Median (nmol/L)	Range (nmol/L)
Males	211	456	241–827	15.8	8.4–28.7
Females	190	38	14–76	1.3	0.5–2.6

These results were confirmed for the ADVIA Centaur Testosterone assay by analyzing 387 samples in the range of 10.2 to 1454.2 ng/dL (0.35 to 50.5 nmol/L). Refer to *Method Comparison.*

As with all *in vitro* diagnostic assays, each laboratory should determine its own reference range(s) for the diagnostic evaluation of patient results.[11]

Performance Characteristics

Specificity

The ADVIA Centaur Testosterone assay shows high specificity for testosterone. The following compounds were spiked into Multi-Diluent 3 and the following results were obtained. The percent cross-reactivity is the apparent result compared to the amount added.

Compound	Amount Added	% Cross-reactivity
5α-dihydrotestosterone	100 ng/mL	5.4
Androstenedione	100 ng/mL	0.94
Methyltestosterone	100 ng/mL	0.68
Estradiol-17β	100 ng/mL	0.02
Androsterone	1 µg/mL	< 0.1
Cortisol	1 µg/mL	< 0.1
Corticosterone	1 µg/mL	< 0.1
Cyproterone	100 ng/mL	< 0.1
Danazol	1 µg/mL	< 0.1
DHEA-sulfate	1 µg/mL	< 0.1
11-deoxycortisol	1 µg/mL	< 0.1
Dexamethasone	1 µg/mL	< 0.1
Estrone	100 ng/mL	< 0.1
Oxymetholone	100 ng/mL	< 0.1
Progesterone	1 µg/mL	< 0.1

Interference testing was determined according to CLSI Document EP7-A2.[12]

Sensitivity and Assay Range

The ADVIA Centaur Testosterone assay measures testosterone concentrations up to 1500 ng/dL (52.1 nmol/L) with a minimum detectable concentration (analytical sensitivity) of 10 ng/dL (0.35 nmol/L). Analytical sensitivity is defined as the concentration of testosterone that corresponds to the RLUs that are two standard deviations less than the mean RLUs of 20 replicate determinations of the Testosterone zero standard.

Method Comparison

For 387 samples in the range of 10.2 to 1454.2 ng/dL (0.35 to 50.5 nmol/L), the relationship between the ADVIA Centaur Testosterone assay and the ACS:180 Testosterone assay is described by the equation:

ADVIA Centaur Testosterone = 0.95 (ACS:180 Testosterone) + 0.88 ng/dL

Correlation coefficient (r) = 0.99

Dilution Recovery

Five human serum samples in the range of 521.74 to 1290.31 ng/dL (18.10 to 44.77 nmol/L) were diluted 1:2, 1:4, 1:8, and 1:16 with Multi-Diluent 3 and assayed for recovery and parallelism. The recoveries ranged from 94.8% to 115.3% with a mean of 104.2%.

Sample	Dilution	Observed (ng/dL)	Expected (ng/dL)	Observed (nmol/L)	Expected (nmol/L)	Recovery %
1	—	521.74		18.10		
	1:2	255.19	260.87	8.86	9.05	97.8
	1:4	138.49	130.44	4.81	4.53	106.2
	1:8	66.60	65.22	2.31	2.26	102.1
	1:16	37.60	32.61	1.30	1.13	115.3
	Mean					105.4
2	—	931.89		32.34		
	1:2	481.15	465.95	16.70	16.17	103.3
	1:4	220.83	232.97	7.66	8.08	94.8
	1:8	112.20	116.49	3.89	4.04	96.3
	1:16	56.00	58.24	1.94	2.02	96.1
	Mean					97.6
3	—	1290.31		44.77		
	1:2	697.13	645.16	24.19	22.39	108.1
	1:4	347.85	322.58	12.07	11.19	107.8
	1:8	179.51	161.29	6.23	5.60	111.3
	1:16	88.19	80.64	3.06	2.80	109.4
	Mean					109.1
4	—	1074.62		37.29		
	1:2	555.70	537.31	19.28	18.64	103.4
	1:4	272.94	268.66	9.47	9.32	101.6
	1:8	135.98	134.33	4.72	4.66	101.2
	1:16	69.85	67.16	2.42	2.33	104.0
	Mean					102.6
5	—	1074.29		37.28		
	1:2	606.38	537.15	21.04	18.64	112.9
	1:4	288.14	268.57	10.00	9.32	107.3
	1:8	131.34	134.29	4.56	4.66	97.8
	1:16	71.37	67.14	2.48	2.33	106.3
	Mean					106.1
Mean						**104.2**

Spiking Recovery

Varying amounts of testosterone were added to five samples with endogenous testosterone levels of 25.0 to 56.0 ng/dL (0.8675 to 1.9432 nmol/L). The recoveries ranged from 83.0% to 107.5% with a mean of 95.6%.

Sample	Amount Added (ng/dL)	Observed (ng/dL)	Amount Added (nmol/L)	Observed (nmol/L)	Recovery %
1	—	28.0	—	0.9716	
	75.0	97.0	2.6025	3.3659	92.0
	100.0	118.0	3.4700	4.0946	90.0
	250.0	262.0	8.6750	9.0914	93.6
	500.0	493.0	17.3500	17.1071	93.0
	800.0	692.0	27.7600	24.0124	83.0
	1200.0	1035.0	41.6400	35.9145	83.9
	Mean				89.3
2	—	38.0	—	1.3186	
	75.0	112.0	2.6025	3.8864	98.7
	100.0	133.0	3.4700	4.6151	95.0
	250.0	280.0	8.6750	9.7160	96.8
	500.0	536.0	17.3500	18.5992	99.6
	800.0	835.0	27.7600	28.9745	99.6
	1200.0	1196.0	41.6400	41.5012	96.5
	Mean				97.7
3	—	25.0	—	0.8675	
	75.0	99.0	2.6025	3.4353	98.7
	100.0	122.0	3.4700	4.2334	97.0
	250.0	255.0	8.6750	8.8485	92.0
	500.0	540.0	17.3500	18.7380	103.0
	800.0	786.0	27.7600	27.2742	95.1
	1200.0	1114.0	41.6400	38.6558	90.8
	Mean				96.1
4	—	56.0	—	1.9432	
	75.0	128.0	2.6025	4.4416	96.0
	100.0	153.0	3.4700	5.3091	97.0
	250.0	306.0	8.6750	10.6182	100.0
	500.0	592.0	17.3500	20.5424	107.2
	800.0	916.0	27.7600	31.7852	107.5
	1200.0	1204.0	41.6400	41.7788	95.7
	Mean				100.6
5	—	33.0	—	1.1451	
	75.0	101.0	2.6025	3.5047	90.7
	100.0	132.0	3.4700	4.5804	99.0
	250.0	269.0	8.6750	9.3343	94.4
	500.0	507.0	17.3500	17.5929	94.8
	800.0	785.0	27.7600	27.2395	94.0
	1200.0	1143.0	41.6400	39.6621	92.5
	Mean				94.2
Mean					**95.6**

434

Precision

Four samples were assayed 6 times, in each of 12 runs, on 4 systems, (n = 72 for each sample), over a period of 6 days. The following results were obtained:

Mean (ng/dL)	Mean (nmol/L)	Within-run % CV	Run-to-run % CV	Total % CV
95.5	3.31	6.2	4.4	7.6
365.4	12.68	4.7	4.7	6.6
798.3	27.70	2.6	4.3	5.0
1009.5	35.03	2.3	1.4	2.7

Traceability of Standardization

The ADVIA Centaur Testosterone assay is standardized using internal standards manufactured analytically which are traceable to gas chromatography-mass spectroscopy (GCMS). The following equation describes the relationship between the testosterone standards and GCMS analysis throughout the range of the assay.

$$\text{ADVIA Centaur Testosterone} = 1.00\ (\text{GCMS}) + 1.35\ \text{ng/dL},\ r = 1.00$$

Assigned values for calibrators are traceable to this standardization.

Technical Assistance

For customer support, contact your local technical support provider or distributor.

www.siemens.com/diagnostics

References

1. Spratt DI, Bigos ST, Beitins I, et al. Both hyper- and hypogonadotropic hypogonadism occur transiently in acute illness: bio- and immunoactive gonadotropins. J Clin Endocrinol Metab 1992. (7)1562–70.
2. Anttila L, Koskinen P, Erkkola R, et al. Serum testosterone, androstenedione, and luteinizing hormone levels after short-term medroxyprogesterone acetate treatment in women with polycystic ovarian disease. Acta Obstet et Gynecol Scand 1994;73:634–6.
3. Wilke TJ, Utley DJ. Total testosterone, free-androgen index, calculated free testosterone and free testosterone by analog RIA compared in hirsute women and in otherwise-normal women with altered binding of sex-hormone-binding globulin. Clin Chem 1978;33:8.
4. Kicklighter EJ, Norman RJ. The gonads. In: Kaplan LA, Pesce AJ, editors. Clinical chemistry: theory, analysis and correlation. 2nd ed. St. Louis: CV Mosby, 1989. p.657–62.
5. Reagent Water Technical Bulletin. Siemens Healthcare Diagnostics, 107060.
6. Clinical and Laboratory Standards Institute (formerly NCCLS). *Procedures for the Handling and Processing of Blood Specimens; Approved Guideline - Third Edition.* Wayne, PA: Clinical and Laboratory Standards Institute; 2004. NCCLS Document H18-A3.
7. Centers for Disease Control. Update: Universal precautions for prevention of transmission of human immunodeficiency virus, hepatitis B virus and other bloodborne pathogens in healthcare settings. MMWR, 1988;37:377–82, 387–8.
8. Clinical and Laboratory Standards Institute (formerly NCCLS). *Protection of Laboratory Workers From Occupationally Acquired Infections; Approved Guideline - Third Edition.* Wayne, PA: Clinical and Laboratory Standards Institute; 2005. CLSI Document M29-A3.
9. Federal Occupational Safety and Health Administration. Bloodborne Pathogens Standard. 29 CFR 1910.1030.
10. Boscato LM, Stuart MC. Heterophilic antibodies: a problem for all immunoassays. Clin Chem 1988;34:27–33.
11. Clinical and Laboratory Standards Institute (formerly NCCLS). *How to Define and Determine Reference Intervals in the Clinical Laboratory; Approved Guideline - Second Edition.* Wayne, PA: Clinical and Laboratory Standards Institute; 2000. NCCLS Document C28-A2.
12. Clinical and Laboratory Standards Institute (formerly NCCLS). *Interference Testing in Clinical Chemistry; Approved Guideline - Second Edition.* Wayne, PA: Clinical and Laboratory Standards Institute; 2005. CLSI document EP7-A2.

ADVIA Centaur, ReadyPack, and ACS:180 are trademarks of Siemens Healthcare Diagnostics.
© 2008 Siemens Healthcare Diagnostics Inc. All rights reserved.
US Pats 5,110,932; 5,241,070; 5,538,901; 5,609,822; 5,656,426; 5,788,928

Origin: US

Siemens Healthcare Diagnostics Inc.
Tarrytown, NY 10591-5097 USA

EC REP Siemens Healthcare Diagnostics Ltd.
Sir William Siemens Sq.
Frimley, Camberley, UK GU16 8QD

Siemens Healthcare
Diagnostics Pty Ltd
885 Mountain Highway
Bayswater Victoria 3153
Australia

シーメンスヘルスケア・
ダイアグノスティクス株式会社
東京都品川区東五反田 3－20－14
Siemens Healthcare Diagnostics
輸入

436

Theophylline 2 (THEO 2)

CE

Assay Summary

Sample Type	**Serum, Heparinized Plasma, EDTA Plasma**
Sample Volume	**20 µL**
Calibrator	**27**
Sensitivity and Assay Range	**0.5 – 40 µg/mL (2.8 – 222 µmol/L)**

Contents

REF	Contents	Number of Tests
08838753 (128380)	5 ReadyPack® primary reagent packs containing ADVIA Centaur® THEO 2 Lite Reagent and Solid Phase ADVIA Centaur THEO 2 Master Curve card	250
or		
03009619 (128379)	1 ReadyPack primary reagent pack containing ADVIA Centaur THEO 2 Lite Reagent and Solid Phase ADVIA Centaur THEO 2 Master Curve card	50

For a definition of symbols used in product labeling, please refer to *Understanding the Symbols* in Appendix D.

Intended Use

For *in vitro* diagnostic use in the quantitative determination of theophylline in serum or plasma using the ADVIA Centaur and ADVIA Centaur XP systems.

Materials Required But Not Provided

REF	Description	Contents
08501406 (128304)	Calibrator 27	2 vials of low calibrator CAL L 2 vials of high calibrator CAL H

Optional Reagents

REF	Description	Contents
05389133 (110315)	ADVIA Centaur Multi-Diluent 3 M-DIL 3	2 ReadyPack ancillary reagent packs containing 5 mL/pack
06223468 (672192)	Multi-Diluent 3 M-DIL 3	50 mL/vial
128399	THEO 2 Master Curve Material	7 x 1 mL

Summary and Explanation of the Test

Theophylline (1,3-dimethylxanthine) is a potent bronchodilator and respiratory stimulant that is often used prophylactically to control the symptoms of chronic asthma.[1,2] Theophylline also is used to treat acute asthmatic episodes, neonatal apnea, Cheyne-Stokes respiration, and acute pulmonary edema.[3]

Theophylline has a narrow therapeutic range in serum from 10 to 20 µg/mL (55.5 to 111 µmol/L).[4] Toxicity may occur when serum theophylline levels exceed 20 µg/mL (111 µmol/L). Toxic side effects range from headache and slight nausea to central nervous system damage or death.[1-5] In addition, serum theophylline levels below 10 µg/mL (55.5 µmol/L) may be ineffective in treating chronic asthma.[1-5]

The optimal theophylline level for each individual is determined by the physician after repeated testing and patient evaluation. A person's ability to absorb and metabolize theophylline is affected by a variety of factors including gender, weight, genetics, age, diet, smoking habits, drug use, exposure to environmental substances, coadministered drugs, hepatic and renal function, and pathophysiological condition.[2,3,6] In neonates and adults with congestive heart failure, the half-life can be prolonged (20 to 30 hours).[6] Monitoring and maintaining a patient's theophylline level through therapeutic drug monitoring is very important in reducing the risks of over- or under-medication for effective ongoing therapy.[2,3,6]

Assay Principle

The ADVIA Centaur Theophylline 2 assay is a competitive immunoassay using direct, chemiluminescent technology. Theophylline in the patient sample competes with acridinium ester-labeled theophylline in the Lite Reagent for a limited amount of monoclonal mouse anti-theophylline antibody bound to monoclonal mouse capture antibody, which is covalently coupled to paramagnetic particles in the Solid Phase.

The system automatically performs the following steps:

- dispenses 20 µL of sample into a cuvette
- dispenses 450 µL of Solid Phase and 100 µL Lite Reagent and incubates for 7.5 minutes at 37°C
- separates, aspirates, and washes the cuvettes with reagent water[7]
- dispenses 300 µL each of Acid Reagent and Base Reagent to initiate the chemiluminescent reaction
- reports results according to the selected option, as described in the system operating instructions or in the online help system

An inverse relationship exists between the amount of theophylline present in the patient sample and the amount of relative light units (RLUs) detected by the system.

Specimen Collection and Handling

NOTE: Available literature references present conflicting and complex recommendations on the use of gel barrier tubes for therapeutic drug monitoring samples. Each lab should contact their specific tube manufacturer for additional information and recommendations for therapeutic drug monitoring testing with the ADVIA Centaur systems.

Serum, heparinized plasma, or EDTA plasma are the recommended sample types for this assay.

The effects of anticoagulants on the ADVIA Centaur Theophylline 2 assay were evaluated using six matched donor sets of blood drawn into red top serum, heparin, and EDTA collection tubes. Theophylline [15 µg/mL (83.3 µmol/L)] was added to each sample and the percent recovery was determined. All samples were run in replicates of five. The percent recovery for samples collected into heparin, and EDTA was found to be equivalent to samples collected into red top serum collection tubes.

The following recommendations for handling and storing blood samples are furnished by the National Committee for Clinical Laboratory Standards (NCCLS):[8]

- Collect all blood samples observing universal precautions for venipuncture.
- Allow samples to clot adequately before centrifugation.
- Keep tubes stoppered and upright at all times.
- Do not use samples that have been stored at room temperature for longer than 8 hours.
- Tightly cap and refrigerate specimens at 2 to 8°C if the assay is not completed within 8 hours.
- Freeze samples at or below -20°C if the sample is not assayed within 48 hours.
- Freeze samples only once and mix thoroughly after thawing.

Before placing samples on the system ensure that:

- Samples are free of fibrin or other particulate matter.
- Samples are free of bubbles.

Reagents

Store the reagents upright at 2–8°C.
Mix all primary reagent packs by hand before loading them onto the system. Visually inspect the bottom of the reagent pack to ensure that all particles are dispersed and resuspended. For detailed information about preparing the reagents for use, refer to Appendix C, *Handling Reagents*.

Reagent Pack	Reagent	Volume	Ingredients	Storage	Stability
ADVIA Centaur THEO 2 ReadyPack primary reagent pack	Lite Reagent	5.0 mL/ reagent pack	Theophylline labeled with acridinium ester (~0.3 ng/ mL) in buffered saline with bovine serum albumin and sodium azide (0.1%)	2–8°C	until the expiration date on the pack label. For onboard stability, refer to *Onboard Stability and Calibration Interval.*
	Solid Phase	22.5 mL/ reagent pack	Monoclonal mouse anti-theophylline antibody (~3 µg/mL) bound to monoclonal mouse capture antibody (~14 µg/mL) covalently coupled to paramagnetic particles in buffered saline with bovine serum albumin and sodium azide (0.1%)	2–8°C	until the expiration date on the pack label. For onboard stability, refer to *Onboard Stability and Calibration Interval.*
ADVIA Centaur M-DIL 3 ReadyPack ancillary reagent pack	Multi-Diluent 3	5.0 mL/ reagent pack	human plasma with sodium azide (0.1%)	2–8°C	until the expiration date on the pack label or 28 consecutive days after accessing the ancillary reagent pack

439

CAUTION: Sodium azide can react with copper and lead plumbing to form explosive metal azides. On disposal, flush reagents with a large volume of water to prevent the buildup of azides, if disposal into a drain is in compliance with federal, state, and local requirements.

R22 S28 **Harmful!** Harmful if swallowed. After contact with skin, wash immediately with plenty of soap and water. **Contains:** sodium azide; Lite Reagent, Solid Phase

CAUTION! POTENTIAL BIOHAZARD: Contains human source material. While each human serum or plasma donor unit used in the manufacture of this product was tested by FDA-approved methods and found nonreactive for hepatitis B surface antigen (HBsAg), antibody to hepatitis C (HCV), and antibody to HIV-1/2, all products manufactured using human source material should be handled as potentially infectious. Because no test method can offer complete assurance that hepatitis B or C viruses, HIV, or other infectious agents are absent, these products should be handled according to established good laboratory practices.[9-11]

CAUTION: This device contains material of animal origin and should be handled as a potential carrier and transmitter of disease.

For *In Vitro* Diagnostic Use.

Loading Reagents

Ensure that the system has sufficient primary and ancillary reagent packs. For detailed information about preparing the system, refer to the system operating instructions or to the online help system.

CAUTION: Mix all primary reagent packs by hand before loading them onto the system. Visually inspect the bottom of the reagent pack to ensure that all particles are dispersed and resuspended. For detailed information about preparing the reagents for use, refer to Appendix C, *Handling Reagents*.

Load the ReadyPack reagent packs in the primary reagent area using the arrows as a placement guide. The system automatically mixes the primary reagent packs to maintain homogeneous suspension of the reagents. For detailed information about loading reagents, refer to the system operating instructions or to the online help system.

If automatic dilution of a sample is required, load ADVIA Centaur Multi-Diluent 3 in the ancillary reagent entry.

Onboard Stability and Calibration Interval

Onboard Stability	Calibration Interval
14 days	14 days

Additionally, the ADVIA Centaur Theophylline 2 assay requires a two-point calibration:

- when changing lot numbers of primary reagent packs
- when replacing system components
- when quality control results are repeatedly out of range

CAUTION:

- Discard the primary reagent packs at the end of the onboard stability interval.
- Do not use reagents beyond the expiration date.

Master Curve Calibration

The ADVIA Centaur Theophylline 2 assay requires a Master Curve calibration when using a new lot number of Lite Reagent and Solid Phase. For each new lot number of Lite Reagent and Solid Phase, use the barcode reader or keyboard to enter the Master Curve values on the system. The Master Curve card contains the Master Curve values. For detailed information about entering calibration values, refer to the system operating instructions or to the online help system.

Quality Control

For detailed information about entering quality control values, refer to the system operating instructions or to the online help system.

To monitor system performance and chart trends, as a minimum requirement, two levels of quality control material should be assayed on each day that samples are analyzed. Quality control samples should also be assayed when performing a two-point calibration. Treat all quality control samples the same as patient samples.

Siemens Healthcare Diagnostics recommends the use of commercially available quality control materials with at least 2 levels (low and high). A satisfactory level of performance is achieved when the analyte values obtained are within the Acceptable Control Range for the system or within your range, as determined by an appropriate internal laboratory quality control scheme.

If the quality control results do not fall within the Expected Values or within the laboratory's established values, do not report results. Take the following actions:

- Verify that the materials are not expired.
- Verify that required maintenance was performed.
- Verify that the assay was performed according to the instructions for use.
- Rerun the assay with fresh quality control samples.
- If necessary, contact your local technical support provider or distributor for assistance.

Sample Volume

This assay requires 20 µL of sample for a single determination. This volume does not include the unusable volume in the sample container or the additional volume required when performing duplicates or other tests on the same sample. For detailed information about determining the minimum required volume, refer to *Sample Volume Requirements* in the *ADVIA Centaur Reference Manual.*

NOTE: The sample volume required to perform onboard dilution differs from the sample volume required to perform a single determination. Refer to the following information for the sample volume required to perform onboard dilutions:

Dilution	Sample Volume (µL)
1:2	100

Assay Procedure

For detailed procedural information, refer to the system operating instructions or to the online help system.

Procedural Notes

Calculations

The system reports theophylline results in µg/mL (mass units) or µmol/L (SI units), depending on the units defined when setting up the assay. The conversion formula is 1 µg/mL = 5.55 µmol/L.

Dilutions

- Samples with theophylline levels greater than 40 µg/mL (222 µmol/L) must be diluted and retested to obtain accurate results.
- Patient samples can be automatically diluted by the system or prepared manually.
- For automatic dilutions, ensure that ADVIA Centaur Multi-Diluent 3 is loaded and set the system parameters as follows:

  Dilution point: ≤ 40 µg/mL (222 µmol/L)

  Dilution factor: 2

  For detailed information about automatic dilutions, refer to the system operating instructions or to the online help system.
- Manually dilute the patient samples when patient results exceed the linearity of the assay using automatic dilution, or when laboratory protocol requires manual dilution.
- Use Multi-Diluent 3 to manually dilute patient samples, and then load the diluted sample in the sample rack, replacing the undiluted sample.
- Ensure that results are mathematically corrected for dilution. If a dilution factor is entered when scheduling the test, the system automatically calculates the result.

Disposal

Dispose of hazardous or biologically contaminated materials according to the practices of your institution. Discard all materials in a safe and acceptable manner, and in compliance with all federal, state, and local requirements.

Limitations

Heterophilic antibodies in human serum can react with reagent immunoglobulins, interfering with *in vitro* immunoassays.[12] Patients routinely exposed to animals or to animal serum products can be prone to this interference and anomalous values may be observed. Additional information may be required for diagnosis.

Serum specimens that are . . .	Demonstrate < 5% change in results up to . . .
hemolyzed	100 mg/dL of hemoglobin
lipemic	3000 mg/dL of triglycerides
icteric	10 mg/dL of bilirubin

Expected Results

A therapeutic range of 10 to 20 µg/mL (55.5 to 111 µmol/L) has been reported previously for theophylline.[4]

As with all therapeutic drug assays, each laboratory should determine the appropriateness of this range for the diagnostic evaluation of patient results.[13]

Performance Characteristics

Specificity

A pooled serum sample with a theophylline value of 15 µg/mL (83.25 µmol/L) was spiked with the compounds listed below to concentrations as shown. ADVIA Centaur Theophylline 2 assay results from the spiked sample were compared with those of unspiked control samples. These compounds had either no significant (NS) effect on the theophylline measurement ($p \geq 0.05$, t-test), or the cross-reactivity was less than 5% as determined by the following equation:[14,15]

$$\text{Cross-reactivity} = \frac{\text{concentration of spiked sample} - \text{concentration of unspiked sample}}{\text{concentration of cross-reactant}} \times 100$$

Compound	Amount Added (µg/mL)	Compound	Amount Added (µg/mL)
Acetaminophen	200.0	Amobarbital	100.0
Caffeine	100.0	Diphenhydramine	11.2
Dyphylline	150.0	Ephedrine	10.0
Epinephrine	120	7-(2-hydroxyethyl) theophylline	300.0
Hypoxanthine	10.0	Norepinephrine	7.2
Pentiphylline	160.0	Phenobarbital	150.0
Phenylbutazone	1000.0	L-Phenylephrine	20
Phenytoin	100.0	Prednisolone	10
Prednisone	12.0	Salicyclic acid	500.0
Theobromine	120.0	1,3,7-Trimethyluric acid	100.0
Uric acid	200.0	Xanthine	10.0
1-Methyluric acid	100.0	1-Methylxanthine	100.0
3-Methyluric acid	100.0	7-Methylxanthine	100.0
1,7-Dimethyluric acid	100.0	1,3 – Dimethyluric acid	100.0
1,7- Dimethylxanthine	100.0	8-Chlorotheophylline	300.0
3-methylxanthine	100.0	Ibuprofen	20.0
Isoproterenol	200.0		

Interference testing was determined according to NCCLS Document EP7-P.[14]

Sensitivity and Assay Range

The ADVIA Centaur Theophylline 2 assay measures theophylline concentrations up to 40 µg/mL (222 µmol/L) with a minimum detectable concentration of 0.5 µg/mL (2.8 µmol/L). Analytical sensitivity is defined as the concentration of theophylline that corresponds to the RLUs that are two standard deviations less than the mean RLUs of 20 replicate determinations of the Theophylline 2 zero standard.

Method Comparison

For 223 samples in the range of 0.6 to 37.6 µg/mL (3.3 to 208.7 µmol/L), the relationship between the ADVIA Centaur Theophylline 2 assay and an alternate fluorescence method is described by the equation:

ADVIA Centaur Theophylline 2 = 1.04 (alternate FPIA method) – 0.4 µg/mL

Correlation coefficient (r) = 0.99

Dilution Recovery

Five human serum samples in the range of 18.2 to 34.8 µg/mL (101.0 to 193.1 µmol/L) of theophylline were diluted 1:2, 1:4 and 1:8 with Multi-Diluent 3 and assayed for recovery and parallelism. The recoveries ranged from 90.2% to 109.9% with a mean of 97.0%.

Sample	Dilution	Observed (µg/mL)	Expected (µg/mL)	Observed (µmol/L)	Expected (µmol/L)	Recovery %
1	—	18.2		101.0		
	1:2	10.0	9.1	55.5	50.5	109.9
	1:4	4.5	4.5	25.0	25.0	100.0
	1:8	2.1	2.3	11.7	12.8	91.3
	Mean					100.4
2	—	29.5		163.7		
	1:2	14.7	14.7	81.6	81.6	100.0
	1:4	7.0	7.4	38.9	41.1	94.6
	1:8	3.4	3.7	18.9	20.5	91.2
	Mean					95.3
3	—	18.2		101.0		
	1:2	8.9	9.1	49.4	50.5	97.8
	1:4	4.6	4.5	25.5	25.0	102.2
	1:8	2.2	2.3	12.2	12.8	95.7
	Mean					98.6
4	—	32.8		182.0		
	1:2	15.7	16.4	87.1	91.0	95.7
	1:4	7.6	8.2	42.2	45.5	92.6
	1:8	3.7	4.1	20.5	22.7	90.2
	Mean					92.8
5	—	34.8		193.1		
	1:2	17.6	17.4	97.7	96.6	101.1
	1:4	8.6	8.7	47.7	48.3	98.9
	1:8	4.1	4.4	22.8	24.4	93.2
	Mean					97.7
Mean						**97.0**

Spiking Recovery

Varying amounts of theophylline were added to five theophylline-free normal serum samples. The recoveries ranged from 88.2% to 105.4% with a mean of 98.3%.

Sample	Amount Added (µg/mL)	Observed (µg/mL)	Amount Added (µmol/L)	Observed (µmol/L)	Recovery %
1	—	0.0	—	0.0	
	5.9	5.8	32.7	32.2	98.3
	11.9	10.5	66.0	58.3	88.2
	22.1	21.2	122.7	117.7	95.9
	32.7	31.7	181.5	175.9	96.9
	Mean				94.8
2	—	0.0	—	0.0	
	5.9	5.6	32.7	31.1	94.9
	11.9	12.0	66.0	66.6	100.8
	22.1	23.3	122.7	129.3	105.4
	32.7	32.4	181.5	179.8	99.1
	Mean				100.1

Sample	Amount Added (µg/mL)	Observed (µg/mL)	Amount Added (µmol/L)	Observed (µmol/L)	Recovery %
3	—	0.0	—	0.0	
	5.9	5.9	32.7	32.7	100.0
	11.9	11.5	66.0	63.8	96.6
	22.1	22.4	122.7	124.3	101.4
	32.7	31.8	181.5	176.5	97.2
	Mean				98.8
4	—	0.0	—	0.0	
	5.9	5.7	32.7	31.6	96.6
	11.9	11.5	66.0	63.8	96.6
	22.1	21.7	122.7	120.4	98.2
	32.7	32.3	181.5	179.3	98.8
	Mean				97.6
5	—	0.0	—	0.0	
	5.9	6.0	32.7	33.3	101.7
	11.9	11.8	66.0	65.5	99.2
	22.1	22.8	122.7	126.5	103.2
	32.7	31.8	181.5	176.5	97.2
	Mean				100.3
Mean					**98.3**

Precision

Five samples were assayed 4 times in 12 assays, on each of 3 systems (n = 144 for each sample), over a period of 4 days. The following results were obtained:

Mean (µg/mL)	Mean (µmol/L)	Within-run % CV	Run-to-Run % CV	Total % CV
6.0	33.3	5.3	3.3	9.6
10.0	55.5	3.7	2.8	8.8
17.3	96.0	4.5	0.8	6.7
20.8	115.4	4.1	1.6	6.3
34.8	193.1	3.8	2.2	6.1

Traceability of Standardization

The ADVIA Centaur Theophylline 2 assay is traceable to an internal standard manufactured using U.S.P. (United States Pharmacopeia) material. Assigned values for calibrators are traceable to this standardization.

Technical Assistance

For customer support, please contact your local technical support provider or distributor.

www.siemens.com/diagnostics

References

1. Webb-Johnson DC, Andrews JL. Bronchodilator therapy. In: Drug therapy; reprints from NE Journal of Medicine 1980;5:197–232.
2. Hendeles L, Weinberger M. Drugs in perspective: theophylline, a state of the art review. Pharmacotherapy 1983;3 (1):2–44.
3. Hendeles L, Weinberger M. Theophylline, therapeutic use and serum concentration monitoring. In: Taylor MJ, Finn AL, editors. Individualizing drug therapy. New York:Townsend and Frank, 1981. p. 53.

4. Arky R. Physician's Desk Reference, 49th ed. Medical Economics Data Product Company, Montvale, NJ; 1995. pp. 644–646, 848–850, 1219–1222, 1390–1393, 1938–1940, 1942–1944, 2635–2637.
5. Piafsky KM, Ogilvie RI. Dosage of theophylline in bronchial asthma. In: Drug Therapy; reprints from the NE Journal of Medicine 1976;2: 98–110.
6. Moyer TP, Pippenger CE, Blanke RV, Blouin RA. Therapeutic drug monitoring. In: Tietz NW, editor. Fundamentals of clinical chemistry. 3rd ed. Philadelphia: WB Saunders, 1987. pp. 842–868.
7. Reagent Water Technical Bulletin. Siemens Healthcare Diagnostics, 107060.
8. Medical Solutions Diagnostics, 107060.
9. National Committee for Clinical Laboratory Standards. Procedures for the handling and processing of blood specimens; second edition; approved guideline. NCCLS Document H18-A2; Wayne (PA): NCCLS; 1999 Oct. 40p.
10. Centers for Disease Control. 1988. Update: Universal precautions for prevention of transmission of human immunodeficiency virus, hepatitis B virus and other bloodborne pathogens in healthcare settings. MMWR, 37:377–382, 387, 388.
11. National Committee for Clinical Laboratory Standards. Protection of laboratory workers from occupationally acquired infections-second edition; approved guideline. NCCLS Document M29-A2; Wayne (PA): NCCLS; 2001 Dec. 105p.
12. Federal Occupational Safety and Health Administration, Bloodborne Pathogens Standard, 29 CFR 1910.1030.
13. Boscato LM, Stuart MC. Heterophilic antibodies: a problem for all immunoassays. Clin Chem 1988;34:27–33.
14. National Committee for Clinical Laboratory Standards. How to define, determine, and utilize reference intervals in the clinical laboratory. Approved Guideline. NCCLS publication C28-A. Wayne, PA: NCCLS. 1995.
15. National Committee for Clinical Laboratory Standards. Interference testing in clinical chemistry. Proposed Guideline. NCCLS document EP7-P. Wayne (PA):NCCLS;1986.
16. Holmes EW, Wyngaarden JB. In: Scriver, Beaudet, Sly, Valle, editors. The Metabolic Basis of Inherited Disease I, NY: McGraw Hill, 1989. p. 1089.
17. Kawakatso K, Nishimura K, Kawai M, Chikuma M. Separation and determination of theophylline from paraxanthine in human serum by reversed-phase high performance liquid chromatography: Journal of Pharmaceutical Biomedical Analysis 1989; Vol. 7 No. 8: 965–973.

ADVIA Centaur, ReadyPack, and ACS:180 are trademarks of Siemens Healthcare Diagnostics.

© 2008 Siemens Healthcare Diagnostics Inc. All rights reserved.

US Pats 4,745,181; 4,918,192; 5,110,932; 5,241,070; 5,538,901; 5,609,822; 5,788,928

Origin: US

Siemens Healthcare Diagnostics Inc.
Tarrytown, NY 10591-5097 USA

EC REP Siemens Healthcare Diagnostics Ltd.
Sir William Siemens Sq.
Frimley, Camberley, UK GU16 8QD

Siemens Healthcare
Diagnostics Pty Ltd
885 Mountain Highway
Bayswater Victoria 3153
Australia

シーメンスヘルスケア・
ダイアグノスティクス株式会社
東京都品川区東五反田 3－20－14
Siemens Healthcare Diagnostics
輸入

TnI-Ultra™

Assay Summary

Sample Type	***Serum, heparinized plasma, EDTA plasma***
Sample Volume	***100 µL***
Calibrator	***UL***
Sensitivity and Assay Range	***0.006–50 ng/mL (µg/L)***

Contents

REF	Contents	Number of Tests
02790309	5 ReadyPack® primary reagent packs containing ADVIA Centaur® TnI-Ultra™ Binary Lite Reagent, Solid Phase and ancillary reagent ADVIA Centaur TnI-Ultra Master Curve card 2 vials of lyophilized Low Calibrator UL CAL L 2 vials of lyophilized High Calibrator UL CAL H Barcode labels for the calibrators Calibrator UL Assigned Value Card	500
or		
02789602	1 ReadyPack primary reagent pack containing ADVIA Centaur TnI-Ultra Binary Lite Reagent, Solid Phase and ancillary reagent ADVIA Centaur TnI-Ultra Master Curve card 1 vial of lyophilized Low Calibrator UL CAL L 1 vial of lyophilized High Calibrator UL CAL H Barcode labels for the calibrators Calibrator UL Assigned Value Card	100

For a definition of symbols used in product labeling, please refer to *Understanding the Symbols* in Appendix D.

Intended Use

For *in vitro* diagnostic use in the quantitative determination of cardiac troponin I (cTnI) in serum, heparinized or EDTA plasma using the ADVIA Centaur and ADVIA Centaur XP systems.

Cardiac troponin I determinations aid in the diagnosis of acute myocardial infarction and in the risk stratification of patients with non-ST segment elevation acute coronary syndromes with respect to relative risk of mortality, myocardial infarction (MI) or increased probability of ischemic events requiring urgent revascularization procedures.

Materials Required But Not Provided

REF	Description	Contents
01137199	ADVIA Centaur Wash 1 WASH 1	2 x 1500 mL/pack
(112351)		
or		
03773025	ADVIA Centaur Wash 1 WASH 1 *	2 x 2500 mL/pack

* for use with systems with 2500 mL capacity

447

Optional Reagents

REF	Description	Contents
05699280 (117228)	ADVIA Centaur Multi-Diluent 11 [M-DIL 11]	2 ReadyPack ancillary reagent packs containing 5 mL/pack
03479704 (111088)	Multi-Diluent 11 [M-DIL 11]	10 mL/vial
02738323	TnI-Ultra Master Curve Material	5 x 1 mL

Summary and Explanation of the Test

Troponin is a protein complex which regulates the contraction of striated muscle. It consists of three subunits which are located periodically along the thin filament of the myofibrils. Troponin C binds calcium, troponin T attaches to tropomyosin on the thin filament, and troponin I inhibits actomyosin ATPase.[1-3]

Troponin I (TnI), an inhibitory protein of the troponin-tropomyosin complex, exists in three distinct isoforms: cardiac muscle, slow-twitch skeletal muscle, and fast-twitch skeletal muscle.[4] Each isoform is encoded by a distinct gene, each with a unique amino acid sequence, leading to a 40% dissimilarity among isoforms.[2-5] The cardiac form of troponin I is further unique having 31 additional amino acid residues on its N-terminal, not present in the skeletal forms, which allows for specific polyclonal and monoclonal antibody development.[6] The cardiac specificity of this isoform improves the accuracy of diagnosis in patients with acute or chronic skeletal muscle injury and possible concommitant myocardial injury, and is the basis for its selection as a cardiac marker in the diagnosis of acute MI.[1,7]

cTnI is the only troponin isotype present in the myocardium and is not expressed during any developmental stage in skeletal muscle.[2,7,8] cTnI has a molecular weight of 24,000 daltons.[6] Clinical studies have reported that cTnI is released into the bloodstream within hours of the onset of symptoms of MI or ischemic damage. It can be detected at 3 to 6 hours following onset of chest pain with peak concentrations at 12 to 16 hours, and remains elevated for 5 to 9 days,[9-11] providing more opportunity for detecting MI or excluding the diagnosis.

Always analyze cTnI results in the context of time elapsed since patient presentation to the hospital. Serial sampling is recommended to detect the temporal rise and fall of troponin levels characteristic of MI.[15,21] In accord with published recommendations, serial testing of cTnI at intervals of 2 to 4 hours for up to 12 to 24 hours is suggested to corroborate a single cTnI result. An elevated troponin alone is not sufficient to make the diagnosis of MI. Other markers, such as CK-MB and myoglobin, can be used in conjunction with cTnI results in aiding the diagnosis of MI.

A positive troponin result is not always indicative of MI. Other conditions resulting in myocardial cell damage can contribute to elevated cardiac troponin I levels. These conditions include, but are not limited to, myocarditis, cardiac surgery, angina, unstable angina, congestive heart failure, and non-cardiac related causes, such as, renal failure and pulmonary embolism.[12,13,14]

448

Definition of Acute Myocardial Infarction

The World Health Organization (WHO) criteria for defining Acute Myocardial Infarction (AMI) are the presence of two of the following three elements:[15]

- continual chest pain for greater than 20 minutes
- ECG changes with ST-segment elevation
- elevated cardiac markers

Because of its high clinical specificity and sensitivity, the Joint European Society of Cardiology/American College of Cardiology Committee recognize troponin as the preferred biochemical marker for myocardial damage.[16] The committee also suggests that any amount of myocardial necrosis caused by ischemia should be labeled as an infarct. Individuals previously diagnosed as having severe, stable or unstable angina pectoris might thus be diagnosed today as having had a small MI. The ESC/ACC committee additionally recommends an imprecision level (coefficient of variation, or CV) for Troponin assays of ≤ 10% CV at the 99th percentile of normal. Based on imprecision and other performance criteria, the ADVIA Centaur TnI-Ultra assay is a high sensitivity cTnI method.

As with all *in vitro* diagnostic assays, each laboratory should establish its own diagnostic cutoff which reflects criteria for AMI diagnosis at their institution and is representative of specific populations.[25]

Risk Stratification Analysis of Acute Coronary Syndrome

Because of its cardiac specificity and sensitivity, cTnI has been used as a reliable marker in evaluating patients with unstable angina, a condition implying increased risk of MI and sudden death. Unstable angina patients with minimal values of cTnI are predicted to have a higher risk of short-term mortality. As the cTnI value progressively increases, the risk of mortality increases, presumably because the amount of myocardial damage also increases.[17,18]

In a multicenter substudy of a clinical trial designed to assess the efficacy of low molecular weight heparin in the treatment of unstable angina and non Q-wave MI, blood specimens from 681 patients were analyzed for cTnI using the ACS:180® cTnI method. The 444 patients with levels of cTnI of at least 0.10 ng/mL (µg/L) had higher risk of morbidity and mortality than the 237 patients whose levels were less than 0.10 ng/mL (µg/L).[19]

cTnI results should always be analyzed in the context of time elapsed since patient presentation to the hospital. Serial sampling is recommended to detect the temporal rise and fall of troponin levels characteristic of MI.[16,20] In accord with published recommendations, serial testing of cTnI at intervals of 2 to 4 hours for up to 12 to 24 hours is suggested in order to corroborate a single cTnI result. An elevated troponin alone is not sufficient to make the diagnosis of MI. Other markers such as CK-MB and myoglobin can be used in conjunction with cTnI results in aiding the diagnosis of MI.

Assay Principle

The ADVIA Centaur TnI-Ultra assay is a three-site sandwich immunoassay using direct chemiluminometric technology. An ancillary reagent is included to reduce nonspecific binding. The Binary Lite reagent includes a polyclonal goat anti-troponin I antibody labeled with acridinium ester and 2 biotinylated mouse monoclonal anti-troponin I antibodies. The solid phase reagent is magnetic latex particles conjugated with streptavidin. All reagents are contained within the ReadyPack.

The antibodies in the Binary Lite reagent bind to troponin I in the sample. The biotin contained in the immune complex then binds to the streptavidin-labeled magnetic particles.

The system automatically performs the following steps:

- dispenses 100 µL of sample into a cuvette

449

- dispenses 100 µL of Binary Lite Reagent plus 50 µL of ancillary reagent and incubates for 2.75 minutes at 37°C
- dispenses 150 µL of Solid Phase Reagent and incubates for 5.0 minutes at 37°C
- separates, aspirates, and washes the cuvettes with Wash 1
- dispenses 300 µL each of Acid Reagent and Base Reagent to initiate the chemiluminescent reaction
- reports results according to the selected option, as described in the system operating instructions or in the online help system

A direct relationship exists between the amount of troponin I present in the patient sample and the amount of relative light units (RLUs) detected by the system.

Specimen Collection and Handling

Serum, heparinized plasma, and EDTA plasma are the recommended sample types for this assay.

Evaluation of heparinized and EDTA plasma samples resulted in a mean 1% and 4% decrease in observed values, respectively, compared to serum. A comparison of values for pairs of serum and plasma specimens yielded the following Passing & Bablok equations:

heparinized plasma troponin I = 0.99 (serum troponin I) + 0.03 ng/mL (µg/L); n = 53

EDTA plasma troponin I = 0.96 (serum troponin I) + 0.02 ng/mL (µg/L); n = 31

It is not recommended that either plasma or serum samples from the same patient be used interchangeably with this test. Reference ranges should be established for the evaluation of serum samples, heparinized plasma, and EDTA plasma samples.

The following recommendations for handling and storing blood samples are furnished by the Clinical and Laboratory Standards Institute (CLSI, formerly NCCLS):[21]

- Collect all blood samples observing universal precautions for venipuncture.
- Allow samples to clot adequately before centrifugation.
- Keep tubes stoppered and upright at all times.
- Do not use samples that have been stored at room temperature for longer than 4 hours.
- Tightly cap and refrigerate specimens at 2° to 8°C if the assay is not completed within 4 hours.
- Freeze samples at or below -20°C if the sample is not assayed within 24 hours.
- Freeze samples only once and mix thoroughly after thawing. Frozen specimens can remain frozen up to 1 month in non-frost free freezers.
- Frozen samples must be centrifuged at 2200 x g for 10 minutes before analysis.

Before placing samples on the system ensure that:

- Samples are free of fibrin or other particulate matter.
- Samples are free of bubbles.

Reagents

Store the reagents upright at 2–8°C.
Mix all primary reagent packs by hand before loading them onto the system. Visually inspect the bottom of the reagent pack to ensure that all particles are dispersed and resuspended. For detailed information about preparing the reagents for use, refer to Appendix C, *Handling Reagents*.

Reagent Pack	Reagent	Volume	Ingredients	Storage	Stability
ADVIA Centaur TnI-Ultra ReadyPack primary reagent pack	Binary Lite Reagent	10.0 mL/ reagent pack	polyclonal goat anti-cTnI antibody (0.15 µg/mL) labeled with acridinium ester, 2 monoclonal mouse anti-cTnI antibodies labeled with biotin (2.0 µg/mL), in buffer with stabilizers and preservatives	2–8°C	until the expiration date on the pack label. For onboard stability, refer to *Onboard Stability and Calibration Interval.*
	Solid Phase	15.0 mL/ reagent pack	latex magnetic particles in buffer with stabilizers and preservatives	2–8°C	until the expiration date on the pack label. For onboard stability, refer to *Onboard Stability and Calibration Interval.*
	Ancillary Reagent	5.0 mL/ reagent pack	non-magnetic latex particles in buffer with sodium azide (< 0.1%)	2–8°C	until the expiration date on the pack label. For onboard stability, refer to *Onboard Stability and Calibration Interval.*
Calibrator UL vials	Calibrators	2.0 mL/ vial	after reconstitution, low or high levels of bovine cTnI in goat serum with preservatives and stabilizers	2–8°C 2–8°C ≤ -20°C	lyophilized–until the expiration date on the vial label or reconstituted–1 day or reconstituted–30 days or onboard–4 hours
ADVIA Centaur WASH 1 *	Wash 1	1500 mL/ pack	phosphate buffered saline with sodium azide (< 0.1%) and surfactant	2–25°C	until the expiration date on the vial or onboard – 1 month
ADVIA Centaur WASH 1 *	Wash 1	2500 mL/ pack	phosphate buffered saline with sodium azide (< 0.1%) and surfactant	2–25°C	until the expiration date on the vial or onboard – 1 month

* See *Materials Required But Not Provided.*

CAUTION: This device contains material of animal origin and should be handled as a potential carrier and transmitter of disease.

NOTE: Sodium azide can react with copper and lead plumbing to form explosive metal azides. On disposal, flush reagents with a large volume of water to prevent the buildup of azides, if disposal into a drain is in compliance with federal, state, and local requirements.

For *In Vitro* Diagnostic Use.

Loading Reagents

Ensure that the system has sufficient primary and ancillary reagent packs. For detailed information about preparing the system, refer to the system operating instructions or to the online help system.

451

Mix all primary reagent packs by hand before loading them onto the system. Visually inspect the bottom of the reagent pack to ensure that all particles are dispersed and resuspended. For detailed information about preparing the reagents for use, refer to Appendix C, *Handling Reagents*.

Load the ReadyPack reagent packs in the primary reagent area using the arrows as a placement guide. The system automatically mixes the primary reagent packs to maintain homogeneous suspension of the reagents. For detailed information about loading reagents, refer to the system operating instructions or to the online help system.

If automatic dilution of a sample is required, load ADVIA Centaur Multi-Diluent 11 in the ancillary reagent entry.

NOTE: The Calibrator UL calibrators provided in this kit are matched to the Solid Phase and Binary Lite Reagent. Do not mix Calibrator UL lots with different lots of Solid Phase and Binary Lite Reagent.

Onboard Stability and Calibration Interval

Onboard Stability	Calibration Interval
28 days	28 days

Additionally, the ADVIA Centaur TnI-Ultra assay requires a two-point calibration:

- when changing lot numbers of primary reagent packs
- when replacing system components
- when quality control results are repeatedly out of range

NOTE:

- Discard the primary reagent packs at the end of the onboard stability interval.
- Do not use reagents beyond the expiration date.

Master Curve Calibration

The ADVIA Centaur TnI-Ultra assay requires a Master Curve calibration when using a new lot number of Binary Lite Reagent and Solid Phase. For each new lot number of Binary Lite Reagent and Solid Phase, use the barcode reader or keyboard to enter the Master Curve values on the system. The Master Curve card contains the Master Curve values. For detailed information about entering calibration values, refer to the system operating instructions or to the online help system.

Calibration

For calibration of the ADVIA Centaur TnI-Ultra assay, use the ADVIA Centaur Calibrator UL provided with each kit. The calibrators provided in this kit are matched to the ReadyPack primary reagent pack.

Using the Calibrator Assigned Value Card

Each lot of reagents contains a Calibrator Assigned Value card to facilitate entering the calibration values on the system. Enter the values using the barcode scanner or the keyboard. For detailed information about entering calibrator values, refer to the system operating instructions or to the online help system.

Using Barcode Labels

NOTE: Calibrator barcode labels are lot number specific. Do not use barcode labels from one lot of calibrators with any other lot of calibrators.

452

Use the Calibrator UL barcode labels to label the Low and High Calibrator sample cups when performing the TnI-Ultra assay. Place the barcode label on the sample cup so that the readable characters on the side of the label are vertical on the sample cup.

Preparing Calibrators

1. Add 2.0 mL of reagent water[22] into each calibrator vial using a volumetric or precision pipet.
2. Let the calibrators stand undisturbed for 15 to 20 minutes at room temperature (20° to 30°C) to allow the lyophilized material to dissolve.

Gently swirl and invert the vials until homogeneous.

The calibrator can be aliquoted into sample cups that are sealed tightly. Freeze for up to 30 days and thaw only once. To ensure complete homogeneity, thawed calibrators must be gently mixed and inverted.

Scheduling the Calibrators

The calibration interval for the ADVIA Centaur TnI-Ultra assay is 28 days.

1. Schedule the calibrators to the worklist:
   a. Schedule Calibrator UL for the required tests.
   b. Continue to schedule quality control and patient samples for the required tests.
2. Label the sample cups, one with a Low Calibrator barcode label and another with a High Calibrator barcode label.
   Because calibrator barcode labels are lot number specific, use barcode labels that correspond to the lot number of the calibrator used.
3. Gently mix the Low and High Calibrators.
4. Dispense at least 1.0 mL of Low and High Calibrator into the labeled sample cups.
   The sample cups are marked at 1.0 mL intervals to assist in filling.
   The required calibrator volume depends on how many assays are being calibrated using these calibrators and the number of calibrator replicates.
5. Load the calibrator sample cups on the system.
   The Low Calibrator cup position must precede the High Calibrator cup position.
   Ensure that the appropriate reagents are loaded on the system.
6. Continue loading quality control and patient samples.
7. Start the system, if required.

Quality Control

For detailed information about entering quality control values, refer to the system operating instructions or to the online help system.

To monitor system performance and chart trends, as a minimum requirement, two levels of quality control material should be assayed on each day that samples are analyzed. Quality control samples should also be assayed when performing a two-point calibration. Treat all quality control samples the same as patient samples.

Siemens Healthcare Diagnostics recommends the use of commercially available quality control materials with at least 2 levels (low and high). A satisfactory level of performance is achieved when the analyte values obtained are within the Acceptable Control Range for the system or within your range, as determined by an appropriate internal laboratory quality control scheme.

If the quality control results do not fall within the Expected Values or within the laboratory's established values, do not report results. Take the following actions:

- Verify that the materials are not expired.
- Verify that required maintenance was performed.
- Verify that the assay was performed according to the instructions for use.
- Rerun the assay with fresh quality control samples.
- If necessary, contact your local technical support provider or distributor for assistance.

Sample Volume

This assay requires 100 µL of sample for a single determination. This volume does not include the unusable volume in the sample container or the additional volume required when performing duplicates or other tests on the same sample. For detailed information about determining the minimum required volume, refer to *Sample Volume Requirements* in the *ADVIA Centaur Reference Manual.*

NOTE: The sample volume required to perform onboard dilution differs from the sample volume required to perform a single determination. Refer to the following information for the sample volume required to perform onboard dilutions:

Dilution	Sample Volume (µL)
1:2	150
1:5	60
1:10	30

Assay Procedure

For detailed procedural information, refer to the system operating instructions or to the online help system.

Procedural Notes

Calculations

For detailed information about how the system calculates results, refer to the system operating instructions or to the online help system.

The system reports serum troponin I results in ng/mL (common units) or µg/L (SI units), depending on the units defined when setting up the assay. The conversion formula is 1.0 ng/mL = 1.0 µg/L.

Dilutions

- The assay range is 0.006 to 50 ng/mL (µg/L). Patient samples with troponin I levels greater than 50 ng/mL (µg/L) must be diluted and retested to obtain quantitative results.
- Patient samples can be automatically diluted by the system or prepared manually.
- For automatic dilutions, ensure that ADVIA Centaur Multi-Diluent 11 is loaded and set the system parameters as follows:

  Dilution point: ≤ 50 ng/mL (µg/L)

  Dilution factor: 2, 5, 10

  For detailed information about automatic dilutions, refer to the system operating instructions or to the online help system.

454

- Manually dilute the patient samples when patient results exceed the linearity of the assay using automatic dilution, or when laboratory protocol requires manual dilution.
- Use Multi-Diluent 11 to manually dilute patient samples, and then load the diluted sample in the sample rack, replacing the undiluted sample.
- Ensure that results are mathematically corrected for dilution. If a dilution factor is entered when scheduling the test, the system automatically calculates the result.

High Dose Hook Effect

Patient samples with high troponin I levels can cause a paradoxical decrease in the RLUs (high dose hook effect). In this assay, patient samples with troponin I levels as high as 1000 ng/mL (µg/L) will assay greater than 50 ng/mL (µg/L).

Disposal

Dispose of hazardous or biologically contaminated materials according to the practices of your institution. Discard all materials in a safe and acceptable manner, and in compliance with all federal, state, and local requirements.

Limitations

Do not pour the calibrators back into the vials after calibration because evaporation could occur, which may affect performance.

Dispose of any calibrator remaining in the sample cups after 4 hours.

Do not refill calibrator sample cups when the contents are depleted. If required, dispense fresh calibrators.

Whenever Allergy Screen or sIgE reagents are used on the same ADVIA Centaur system as ADVIA Centaur TnI-Ultra reagents, ensure that sufficient Probe Wash 4 is available to eliminate any potential interference.

Heterophilic antibodies in human serum can react with reagent immunoglobulins, interfering with *in vitro* immunoassays.[24] Patients routinely exposed to animals or to animal serum products can be prone to this interference and anomalous values may be observed. Additional information may be required for diagnosis.

Samples from patients receiving preparations of mouse monoclonal antibodies for therapy or diagnosis may contain Human Anti-Mouse Antibodies (HAMA). Such samples may show either falsely elevated or falsely depressed values when tested with this method.[24]

The following endogenous substances were added to human-based samples at the concentrations listed and evaluated for potential interference in the ADVIA Centaur TnI-Ultra assay. The results demonstrate a ≤ 10% interference from each substance:

Specimens that have . . .	Demonstrate ≤ 10% change in results up to . . .
hemolysis	500 mg/dL of hemoglobin
lipemia	1000 mg/dL of triglycerides
icterus	20 mg/dL of conjugated bilirubin
	20 mg/dL of unconjugated bilirubin
human IgG	12 g/dL of protein
biotin	10 ng/mL of biotin

To assess clinical specificity, two groups of chronic renal failure patients were investigated before and after dialysis. Single specimens were evaluated from each patient.

Chronic Renal Failure	Pre-Dialysis Result	Post-Dialysis Result
No. of Patients	25	25
Range: ng/mL (µg/L)	< 0.006–0.12	< 0.006–0.354
Median: ng/mL (µg/L)	0.008	0.033

The following drugs were added to a human serum-based sample at the concentrations indicated and evaluated for potential interference in the ADVIA Centaur TnI-Ultra assay. The results demonstrated a ≤ 10% interference from each drug.

Drug	Drug Concentration	Drug	Drug Concentration
Ampicillin	53 µg/mL	Theophylline	40 µg/mL
Quinidine	12 µg/mL	Erythromycin	60 µg/mL
Propanolol	10 ng/mL	Acetaminophen	250 ng/mL
Captotril	5 µg/mL	Dicloflenac	50 µg/mL
Atenolol	10 µg/mL	Aspirin	600 µg/mL
Digoxin	200 ng/mL	Nitrofurantoin	4 µg/mL
Allopurinol	400 µg/mL	Cinnarizine	400 µg/mL
Verapamil	2 µg/mL	L-Ascorbic Acid	40 µg/mL
Oxytetracycline	15 µg/mL	Methyl DOPA	15 µg/mL
Nifedipine	400 ng/mL	Nystatin	6.25 µg/mL

Expected Results

A reference range study was conducted using the ADVIA Centaur TnI-Ultra assay based on guidance from the Clinical and Laboratory Standards Institute (CLSI) Protocol C28-A2.[25] The study, which used 1845 fresh serum, lithium heparin plasma, and EDTA plasma samples from 648 apparently healthy individuals ranging from 17–91 years of age, demonstrated a 99th percentile of 0.04 ng/mL (µg/L). The potential range of results for the 99th percentile is 0.02 to 0.06 ng/mL (µg/L) for the ADVIA Centaur family of systems, dependent upon sample type, instrument, and reagent lot.

As with all *in vitro* diagnostic assays, each laboratory should establish its own diagnostic cutoff which reflects criteria for AMI diagnosis at their institution and is representative of specific populations.[25]

The precision curve for the ADVIA Centaur TnI-Ultra assay demonstrates a total coefficient of variation of 10% at a level of 0.03 ng/mL (µg/L). This level of imprecision shows a CV of ≤ 10% at the 99th percentile of the reference population indicating that the TnI-Ultra assay meets the definition of a high sensitivity Troponin method as described by the ESC/ACC recommendations. Refer to *Precision*.

Risk Stratification

Statistically significant increases in mortality have been observed as a function of increasing levels of cardiac troponin I. In patients with acute coronary syndromes such as unstable angina or non-Q wave myocardial infarction, cardiac troponin I levels provide useful prognostic information and aid in early detection of such patients with an increased risk of death. The Risk Stratification cutpoint was previously established with the ACS:180 cTnI assay at a level of 0.1 ng/mL (µg/L).

Specific Performance Characteristics

Clinical Performance

World Health Organization Definition for Diagnosis of MI

Utilizing the historical definition of MI as described by the World Health Organization (WHO), evaluation of a population consisting of patients from multiple clinical sites was previously performed using the ACS:180 cTnI assay. Clinical sensitivity and specificity were determined versus clinical diagnosis for 278 patients using serum samples. The patient population which included both males and females consisted of 112 individuals who ruled-in for AMI and 166 individuals who ruled-out for AMI. At least two of the following findings were present to establish clinical diagnosis:

- chest discomfort of ≥ 20 minutes
- abnormal ECG
- elevated cardiac markers

Results from clinical data were analyzed based on Receiver Operating Characteristics (ROC) plots using the guidelines presented in CLSI document GP10-A.[26] A 0.9 ng/mL (µg/L) diagnostic cutoff was determined for the ACS:180 cTnI assay.

The ROC analysis for the ACS:180 assay is presented in the following figure.

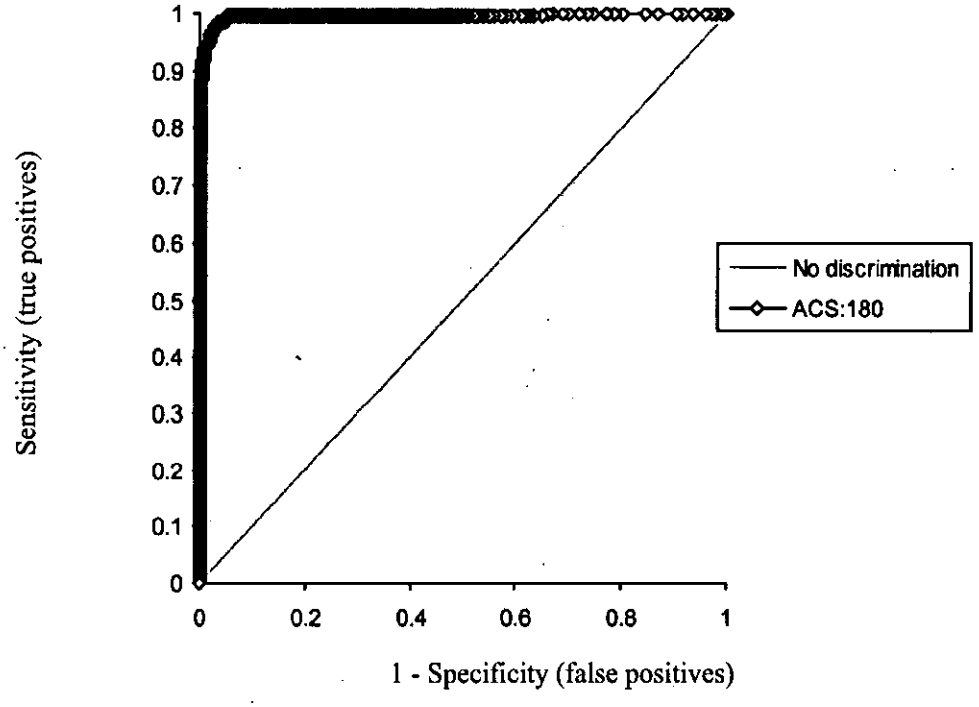

The following table summarizes the sensitivity and specificity of the ACS:180 results.

Method	% Sensitivity	% Specificity
ACS:180 cTnI	97.3	97.0
No. Patients (n)	112	166
95% Confidence Interval (CI)	92.4–99.4	93.1–99.0

457

The agreement between the ACS:180 cTnI assay and the ADVIA Centaur TnI-Ultra assay is shown in *Method Comparison*. Using the relationship between the two assays, the WHO-defined cutoff for the ADVIA Centaur TnI-Ultra method is 0.78 ng/mL (μg/L).

The cutoff and sensitivity/specificity information above should only be used as a guide when determining the appropriate cutoff for your institution. Since sensitivity and specificity are influenced by the cutoff, institutions should select a cutoff based on their specific sensitivity and specificity requirements. The WHO-defined cutoff reflects a higher level of myocardial damage than the information detailed in the ESC/ACC recommendation.

ESC/ACC Recommendation

A joint committee of the European Society of Cardiology and the American College of Cardiology has recommended a redefinition of MI. As part of this redefinition, the committee has suggested that an increased troponin level should be defined as a measurement exceeding the 99th percentile of the reference interval and that an acceptable imprecision (CV) for measurements at the 99th percentile is ≤ 10%.

The overall 99th percentile for the ADVIA Centaur TnI-Ultra assay is 0.04 ng/mL (μg/L). The potential range of results for the 99th percentile is 0.02 to 0.06 ng/mL (μg/L) for the ADVIA Centaur family of systems, dependent upon sample type, instrument, and reagent lot. This was established utilizing 1845 fresh samples from 648 apparently healthy individuals.

Specificity

The ADVIA Centaur TnI-Ultra assay shows high specificity for cTnI. The following compounds were added at the concentration indicated to a sample with known cTnI concentration. ADVIA Centaur TnI-Ultra assay results from the spiked samples were compared with those of unspiked control samples. Percent cross-reactivity is calculated as:

$$\% \text{ cross-reactivity} = \frac{(\text{concentration of spiked sample} - \text{concentration of unspiked sample})}{\text{concentration of compound}} \times 100$$

Cross-reactant	Amount (ng/mL) (μg/L)	% Cross-reactivity
Cardiac Troponin T	1000	ND
Skeletal Troponin I	1000	< 0.007
Tropomyosin	1000	ND
Actin	1000	< 0.005
Troponin C	1000	< 0.005
Myosin Light Chain	1000	ND
Myoglobin	1000	ND
CK-MB	1000	ND

* ND = Not Detectable.

Interference testing was determined according to CLSI Document EP7-A2.[27]

Minimum Detectable Concentration and Assay Range

The ADVIA Centaur TnI-Ultra assay measures troponin I concentrations up to 50 ng/mL (μg/L) with a minimum detectable concentration (analytical sensitivity) of 0.006 ng/mL (μg/L). Analytical sensitivity is defined as the concentration of troponin I that corresponds to the RLUs that are two standard deviations greater than the mean RLUs of 20 replicate determinations of the TnI-Ultra zero standard.

Functional Sensitivity

The functional sensitivity is defined as the lowest cTnI concentration determined at a coefficient of variation of 20%. The ADVIA Centaur TnI-Ultra assay functional sensitivity was determined to be 0.017 ng/mL (μg/L). The total % CV profile in the assay range of 0.007 to 0.182 ng/mL (μg/L) is shown in *Precision*.

Method Comparison

The relationship between the ADVIA Centaur TnI-Ultra assay, the ACS:180 cTnI assay, the ADVIA Centaur cTnI assay, and the Beckman Coulter Access AccuTnI assay are described by using the Passing & Bablok method conversion:

ADVIA Centaur TnI-Ultra = 0.87 (ACS:180 cTnI) - 0.02 ng/mL (µg/L), r = 0.97;
334 serum samples from 0.1 to 30.9 ng/mL (µg/L)

ADVIA Centaur TnI-Ultra = 0.94 (ADVIA Centaur cTnI) + 0.01 ng/mL (µg/L), r = 0.98;
1039 lithium heparin samples from 0.1 to 46.0 ng/mL (µg/L)

ADVIA Centaur TnI-Ultra = 1.66 (Access AccuTnI) + 0.005 ng/mL (µg/L), r = 0.98;
542 lithium heparin samples from 0.0 to 37.4 ng/mL (µg/L)

Dilution Recovery

Ten human serum samples in the range of 9.55 to 45.02 ng/mL (µg/L) of cTnI were diluted 1:2, 1:5 and 1:10 with Multi-Diluent 11 and assayed for recovery and parallelism.

The recoveries ranged from 60% to 118% with a mean of 93%.

Sample	Dilution	Observed (ng/mL) (µg/L)	Expected (ng/mL) (µg/L)	Recovery %
1	—	9.55		
	1:2	4.67	4.77	98
	1:5	1.91	1.91	100
	1:10	0.89	0.95	93
	Mean			97
2	—	13.59		
	1:2	6.02	6.80	88
	1:5	2.25	2.72	83
	1:10	1.02	1.36	75
	Mean			82
3	—	13.19		
	1:2	6.00	6.60	91
	1:5	2.33	2.64	88
	1:10	0.79	1.32	60
	Mean			80
4	—	45.02		
	1:2	21.45	22.51	95
	1:5	8.02	9.00	89
	1:10	3.93	4.50	87
	Mean			90
5	—	27.43		
	1:2	13.54	13.71	99
	1:5	5.34	5.49	97
	1:10	2.58	2.74	94
	Mean			97
6	—	27.63		
	1:2	13.15	13.81	95
	1:5	5.12	5.53	93
	1:10	2.54	2.76	92
	Mean			93

459

Sample	Dilution	Observed (ng/mL) (µg/L)	Expected (ng/mL) (µg/L)	Recovery %
7	—	12.80		
	1:2	5.69	6.40	89
	1:5	2.21	2.56	86
	1:10	1.05	1.28	82
	Mean			86
8	—	35.88		
	1:2	19.40	17.94	108
	1:5	8.27	7.18	115
	1:10	4.24	3.59	118
	Mean			114
9	—	29.80		
	1:2	14.49	14.90	97
	1:5	5.91	5.96	99
	1:10	3.00	2.98	101
	Mean			99
10	—	19.29		
	1:2	9.16	9.65	95
	1:5	3.52	3.86	91
	1:10	1.71	1.93	89
	Mean			92
Mean				**93**

Linearity

Six human serum samples in the range of 2.05 to 27.80 ng/mL (µg/L) were diluted with negative serum, and assayed for recovery and linearity. The recoveries ranged from 92.5% to 105.5%.

Sample	% Sample	Observed (ng/mL) (µg/L)	Expected (ng/mL) (µg/L)	Recovery %
1	100	27.80		
	75	20.67	20.85	99.1
	50	13.21	13.90	95.0
	25	6.43	6.95	92.5
	Mean			95.5
2	100	5.13		
	75	3.87	3.85	100.5
	50	2.53	2.57	98.4
	25	1.35	1.28	105.5
	Mean			101.5
3	100	8.81		
	75	6.37	6.61	96.4
	50	4.26	4.40	96.8
	25	2.08	2.21	94.1
	Mean			95.8
4	100	4.49		
	75	3.25	3.37	96.4
	50	2.19	2.24	97.8
	25	1.09	1.12	97.3
	Mean			97.2

460

Sample	% Sample	Observed (ng/mL) (µg/L)	Expected (ng/mL) (µg/L)	Recovery %
5	100	2.05		
	75	1.53	1.54	99.3
	50	1.05	1.03	101.2
	25	0.52	0.51	102.0
	Mean			100.8
6	100	7.78		
	75	5.71	5.84	97.8
	50	3.76	3.89	96.7
	25	1.91	1.94	98.5
	Mean			97.7
Mean				**98.1**

Precision

Six control products were assayed 2 times in each of 20 runs over a 20-day period on 2 systems. The following results were obtained:

Mean (ng/mL) (µg/L)	Within-run % CV	Total % CV
0.08	5.1	5.3
0.18	3.4	4.1
0.64	2.1	2.9
2.94	1.3	2.7
10.7	1.7	2.9
27.2	1.9	3.0

461

To assess low-end precision, controls and a low cTnI concentration serum panel were assayed in triplicate in each of 20 runs over a 20-day period. The following plot illustrates the mean TnI concentration versus total CV. These results yield a 10% Total CV at 0.03 ng/mL (µg/L).

Precision Curve

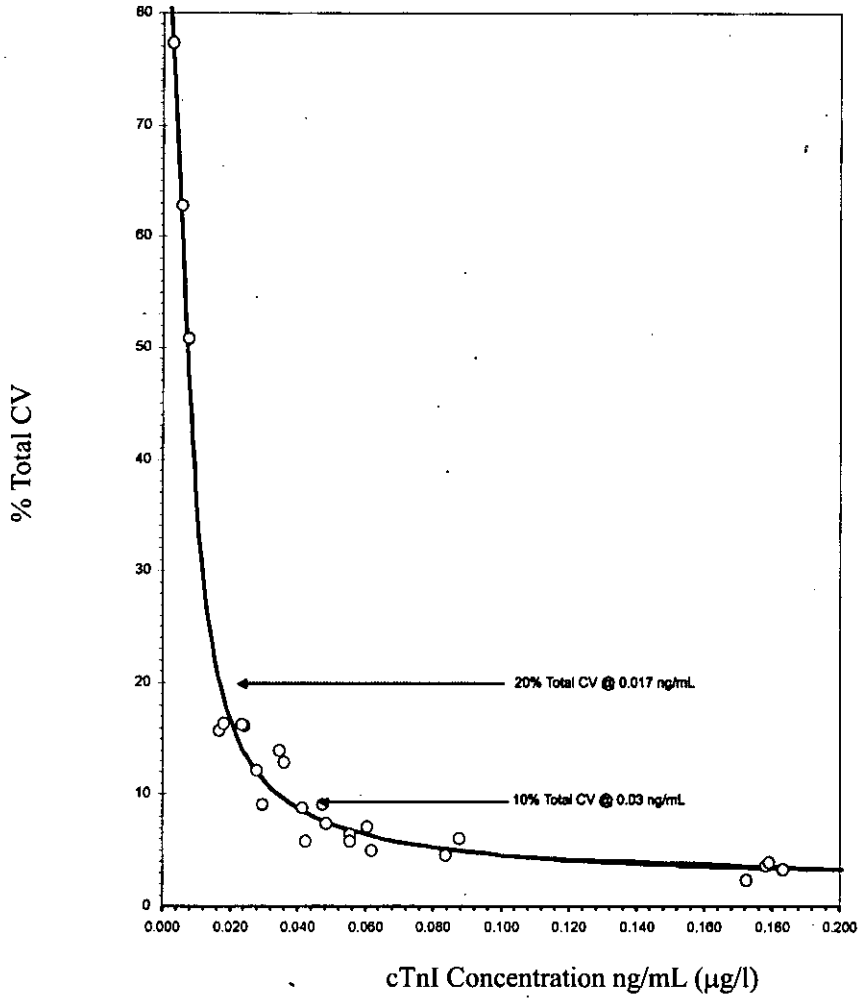

Traceability of Standardization

The ADVIA Centaur TnI-Ultra assay is standardized to an internal standard manufactured using highly purified material. Assigned values for calibrators are traceable to this standardization. The ADVIA Centaur TnI-Ultra assay is traceable to NIST SRM 2921.

Technical Assistance

For customer support, please contact your local technical support provider or distributor.

www.siemens.com/diagnostics

462

References

1. Apple F. Acute myocardial infarction and coronary reperfusion: serum cardiac markers for the 1990s. *Am J Clin Pathol* 1992;97:217-26.
2. Adams J, Bodor G, Davila-Romain V, et al. Cardiac troponin I: A marker for cardiac injury. *Circulation* 1993;88:101-6.
3. Corin S, Juhasz O, Zhul, et al. Structure and expression of the human slow twitch skeletal muscle troponin I gene. *J Biol Chem* 1994;269:10651-7.
4. Mair J, Wagner I, Puschendorf B, et al. Cardiac troponin I to diagnose myocardial injury. *Lancet* 1993;341:838-9.
5. Mair J, Larue C, Mair P, et al. Use of cardiac troponin I to diagnose perioperative myocardial infarction in coronary artery bypass grafting. *Clin Chem* 1994;40:2066-70.
6. Bodor G, Porter S, Landt Y, et al. Development of monoclonal antibodies for an assay of cardiac troponin I and preliminary results in suspected cases of myocardial infarction. *Clin Chem* 1992;38:2203-14.
7. Adams J, Sicard G, Allen B, et al. Diagnosis of perioperative myocardial infarction with measurement of cardiac troponin I. *New Engl J Med* 1994;330:670-4.
8. Adams J, Schechtman K, Landt Y, et al. Comparable detection of acute myocardial infarction by creatine kinase MB isoenzyme and cardiac Troponin I. *Clin Chem* 1994;40:291-5.
9. Cummins B, Auckland ML, Cummins P. Cardiac-specific troponin radioimmunoassay in the diagnosis of acute myocardial infarction. *Am Heart J* 1987;113:1333-44.
10. Larue C, Calzolari C, Bertinchant J, et al. Cardiac-specific immunoenzymometric assay of troponin I in the early phase of acute myocardial infarction. *Clin Chem* 1993;39:972-9.
11. Bodor GS, Porter S, Landt Y, et al. Development of monoclonal antibodies for an assay of cardiac troponin I and preliminary results in suspected cases of myocardial infarction. *Clin Chem* 1992;38:2203-14.
12. Antman EM, Tanasijevic MJ, Thompson B, *et al.* Cardiac-specific troponin I levels to predict the risk of mortality in patients with acute coronary syndromes. *N Eng J Med.* 1996;335:1342-1349.
13. Galvani M, Ottani F, Ferrini D, *et al.* Prognostic influence of elevated values of cardiac troponin I in patients with unstable angina. *Circulation.* 1997;95:2053-2059.
14. Jaffe AS. Elevations in cardiac troponin measurements: false false-positives. *Cardio Tox.* 2001;1:87-92.
15. The Joint International Society and Federation of Cardiology/World Health Organization Task Force on Standardization of Clinical Nomenclature. Nomenclature and criteria for diagnosis of ischemic heart disease. *Circulation* 1979;59:607-9.
16. The Joint European Society of Cardiology/American College of Cardiology Committee. Myocardial infarction redefined—a concensus document of the Joint European Society of Cardiology/American College of Cardiology committee for the redefinition of myocardial infarction. *J Am Coll Cardiol* 2000;36:959-69.
17. Bertinchant J-P, Larue G, Pernel I, et al. Release kinetics of serum cardiac troponin I in ischemic myocardial injury. *Clin Biochem* 1996;29:587-94.
18. Galvani M, Ottani F, Ferrini D, et al. Prognostic influence of elevated values of cardiac troponin I in patients with unstable angina, *Circulation* 1997;95:2053-9.
19. Morrow DA, Rifai N, Tanasijevic MJ, et al. Clinical efficacy of three assays for cardiac troponin I for risk stratification in acute coronary syndromes- a TIMI 11b substudy. *Clin Chem* 2000;46:453-60.
20. Keffer JH. The cardiac profile and proposed practice guideline for acute ischemic heart disease. *Am J Clin Pathol* 1997;107:398-409.
21. Clinical and Laboratory Standards Institute (formerly NCCLS). *Procedures for Handling and Processing of Blood Specimens; Approved Guideline - Third Edition.* Wayne, PA: Clinical and Laboratory Standards Institute; 2004. NCCLS Document H18-A3.
22. Reagent Water Technical Bulletin. Siemens Healthcare Diagnostics, 107060.
23. Boscato LM, Stuart MC. Heterophilic antibodies: a problem for all immunoassays. *Clin Chem* 1988;34:27–33.
24. Schroff RW, Foon KA, Beatty SM, et al. Human anti-murine immunoglobulin responses in patients receiving monoclonal antibody therapy. *Clin Chem* 1988;34:261-264.
25. Clinical and Laboratory Standards Institute (formerly NCCLS). *How to Define, Determine, and Utilize Reference Intervals in the Clinical Laboratory; Approved Guideline - Second Edition.* Wayne, PA: Clinical and Laboratory Standards Institute; 2000. NCCLS Document C28-A2.
26. Clinical and Laboratory Standards Institute (formerly NCCLS). *Assessment of the Clinical Accuracy of Laboratory Tests Using Receiver Operating Characteristic (ROC) Plots; Approved Guideline.* Wayne, PA: Clinical and Laboratory Standards Institute; 1995. NCCLS Document GP10-A.
27. Clinical and Laboratory Standards Institute (formerly NCCLS). *Interference Testing in Clinical Chemistry; Approved Guideline.* Wayne, PA: Clinical and Laboratory Standards Institute; 2002. NCCLS document EP7-A2.

463

TnI-Ultra, ADVIA Centaur, ReadyPack, and ACS:180 are trademarks of Siemens Healthcare Diagnostics.
Beckman Coulter, Access, and AccuTnI are trademarks of Beckman Coulter, Inc.
© 2008 Siemens Healthcare Diagnostics Inc. All rights reserved.
US Pats 5,656,426; 5,110,932; 5,609,822; 5,788,928

Origin: US
Siemens Healthcare Diagnostics Inc.
Tarrytown, NY 10591-5097 USA

EC REP Siemens Healthcare Diagnostics Ltd.
Sir William Siemens Sq.
Frimley, Camberley, UK GU16 8QD

Siemens Healthcare
Diagnostics Pty Ltd
885 Mountain Highway
Bayswater Victoria 3153
Australia

シーメンスヘルスケア・
ダイアグノスティクス株式会社
東京都品川区東五反田 3−20−14
Siemens Healthcare Diagnostics
輸入

464

Tobramycin (TOBR)

CE

Assay Summary

Sample Type	**Serum, Heparinized Plasma, EDTA Plasma**
Sample Volume	**50 µL**
Calibrator	**Z**
Sensitivity and Assay Range	**0.18 – 13 µg/mL (0.39 – 27.8 µmol/L)**

Contents

REF	Contents	Number of Tests
00835186 (121431)	5 ReadyPack® primary reagent packs containing ADVIA Centaur® TOBR Lite Reagent and Solid Phase ADVIA Centaur TOBR Master Curve card	250
or		
03329524 (121430)	1 ReadyPack primary reagent pack containing ADVIA Centaur TOBR Lite Reagent and Solid Phase ADVIA Centaur TOBR Master Curve card	50

For a definition of symbols used in product labeling, please refer to *Understanding the Symbols* in Appendix D.

Intended Use

For *in vitro* diagnostic use in the quantitative determination of tobramycin in serum or plasma using the ADVIA Centaur and ADVIA Centaur XP Systems.

Materials Required But Not Provided

REF	Description	Contents
05165553	Calibrator Z	6 vials of low calibrator CAL L 6 vials of high calibrator CAL H
or		
05165359	Calibrator Z	2 vials of low calibrator CAL L 2 vials of high calibrator CAL H

Optional Reagents

REF	Description	Contents
04311114 (110317)	ADVIA Centaur Multi-Diluent 5 M-DIL 5	2 ReadyPack ancillary reagent packs containing 5 mL/pack
08839946 (570055)	Multi-Diluent 5 M-DIL 5	20 mL/vial
109963	TOBR Master Curve Material	7 x 1 mL

Summary and Explanation of the Test

Tobramycin is an aminoglycoside antibiotic used to treat serious infections caused by aerobic gram-negative bacilli, including *Pseudomonas aeruginosa*, and by certain other organisms, including *Staphylococcus aureus*. Tobramycin is a bactericidal agent, acting on the 30S ribosomal subunit to inhibit protein synthesis in susceptible organisms.[1,2]

465

Tobramycin is used alone or with other antibiotics, such as antipseudomonal penicillins and third-generation cephalosporins, to treat serious infections caused by susceptible species. These infections include bacteremia, intra-abdominal infections, skin and soft tissue infections, lower respiratory tract infections, complicated urinary tract infections, and meningitis.[2]

Tobramycin has a narrow therapeutic range of 5 to 10 µg/mL (10.7 to 21.4 µmol/L) for peak concentrations and 0.5 to 2 µg/mL (1.1 to 4.3 µmol/L) for trough concentrations.[3] Tobramycin has an affinity for the endolymph and perilymph of the inner ear and for the renal cortex and accumulates in these areas.[1] Elevated peak and trough concentrations, especially trough concentrations > 2 µg/mL (4.3 µmol/L), are associated with ototoxicity and nephrotoxicity. Prolonged or repeated aminoglycoside therapy increases the risk of toxicity.[4] Monitoring the patient's serum or plasma tobramycin level is important both to ensure that the drug is present in therapeutic concentrations and to avoid toxicity.[1,2,4,5]

Tobramycin is eliminated unchanged through the kidneys by glomerular filtration. In individuals with normal renal function, tobramycin has a plasma elimination half-life of 2 to 3 hours.[4] However, a number of factors can affect the elimination of the drug. These factors include impaired renal function (which the drug itself may induce[1]), obesity, advanced age, anemia, and dehydration. Therapeutic drug monitoring of tobramycin can help to establish the correct dose, to monitor levels in the critically ill or renally impaired, and to monitor levels when renal function is changing.[1,2,5]

Assay Principle

The ADVIA Centaur Tobramycin assay is a competitive immunoassay using direct chemiluminescent technology. Tobramycin in the patient sample competes with acridinium ester-labeled tobramycin in the Lite Reagent for a limited amount of monoclonal mouse anti-tobramycin antibody, which is covalently coupled to paramagnetic particles in the Solid Phase.

The system automatically performs the following steps:

- dispenses 50 µL of sample into a cuvette
- dispenses 100 µL of Lite Reagent and 400 µL of Solid Phase and incubates for 7.5 minutes at 37°C
- separates, aspirates, and washes the cuvettes with reagent water[6]
- dispenses 300 µL each of Acid Reagent and Base Reagent to initiate the chemiluminescent reaction
- reports results according to the selected option, as described in the system operating instructions or in the online help system

An inverse relationship exists between the amount of tobramycin present in the patient sample and the amount of relative light units (RLUs) detected by the system.

Specimen Collection and Handling

NOTE: Available literature references present conflicting and complex recommendations on the use of gel barrier tubes for therapeutic drug monitoring samples. Each lab should contact their specific tube manufacturer for additional information and recommendations for therapeutic drug monitoring testing with the ADVIA Centaur systems.

Serum, heparinized plasma, or EDTA plasma are the recommended sample types for this assay.

466

The effects of anticoagulants on the ADVIA Centaur Tobramycin assay were evaluated using ten matched donor sets of blood drawn into red top serum, heparin, and EDTA collection tubes. Tobramycin at 9 µg/mL (19.2 µmol/L) was added to each sample and the percent difference was determined. Average measured tobramycin concentrations of samples collected in heparin collection tubes were within -0.29% (range -5.2 to 4.0%) of control red top serum collection tubes. Samples collected in EDTA collection tubes had measured tobramycin concentrations within -3.4% (range -9.6 to 0.8%) of control red top serum collection tubes.

Samples were also compared in glass sodium and glass lithium heparin tubes. Tobramycin at approximately 8 µg/mL (17.1 µmol/L) was added to samples after collection. Average measured tobramycin concentrations from plasma collected in the lithium heparin tubes were within -4.52% (range -8.46 to 0.91%, n = 6) of tobramycin concentrations collected in sodium heparin tubes.

The following recommendations for handling and storing blood samples are furnished by the Clinical and Laboratory Standards Institute (CLSI, formerly NCCLS):[7]

- Collect all blood samples observing universal precautions for venipuncture.
- Allow samples to clot adequately before centrifugation.
- Keep tubes stoppered and upright at all times.
- Do not use samples that have been stored at room temperature for longer than 8 hours.
- Tightly cap and refrigerate specimens at 2 to 8°C if the assay is not completed within 8 hours.
- Freeze samples at or below -20°C if the sample is not assayed within 48 hours.
- Freeze samples only once and mix thoroughly after thawing.

Before placing samples on the system ensure that:

- Samples are free of fibrin or other particulate matter.
- Samples are free of bubbles.

Reagents

Store the reagents upright at 2–8°C.
Mix all primary reagent packs by hand before loading them onto the system. Visually inspect the bottom of the reagent pack to ensure that all particles are dispersed and resuspended. For detailed information about preparing the reagents for use, refer to Appendix C, *Handling Reagents*.

Reagent Pack	Reagent	Volume	Ingredients	Storage	Stability
ADVIA Centaur TOBR ReadyPack primary reagent pack	Lite Reagent	5.0 mL/ reagent pack	tobramycin (~0.16 ng/mL) labeled with acridinium ester in buffered saline with sodium azide (< 0.1%) and preservatives	2–8°C	until the expiration date on the pack label. For onboard stability, refer to *Onboard Stability and Calibration Interval.*
	Solid Phase	20.0 mL/ reagent pack	monoclonal mouse anti-tobramycin antibody (~16 µg/mL) covalently coupled to paramagnetic particles in buffered saline with sodium azide (< 0.1%) and preservatives	2–8°C	until the expiration date on the pack label. For onboard stability, refer to *Onboard Stability and Calibration Interval.*
ADVIA Centaur M-DIL 5 ReadyPack ancillary reagent pack	Multi-Diluent 5	5.0 mL/ reagent pack	human plasma with sodium azide (< 0.1%)	2–8°C	until the expiration date on the pack label or 28 consecutive days after accessing the ancillary reagent pack

467

NOTE: Sodium azide can react with copper and lead plumbing to form explosive metal azides. On disposal, flush reagents with a large volume of water to prevent the buildup of azides, if disposal into a drain is in compliance with federal, state, and local requirements.

CAUTION! POTENTIAL BIOHAZARD: Contains human source material. While each human serum or plasma donor unit used in the manufacture of this product was tested by FDA-approved methods and found nonreactive for hepatitis B surface antigen (HBsAg), antibody to hepatitis C (HCV), and antibody to HIV-1/2, all products manufactured using human source material should be handled as potentially infectious. Because no test method can offer complete assurance that hepatitis B or C viruses, HIV, or other infectious agents are absent, these products should be handled according to established good laboratory practices.[8-10]

CAUTION: This device contains material of animal origin and should be handled as a potential carrier and transmitter of disease.

For *In Vitro* Diagnostic Use.

Loading Reagents

Ensure that the system has sufficient primary and ancillary reagent packs. For detailed information about preparing the system, refer to the system operating instructions or to the online help system.

CAUTION: Mix all primary reagent packs by hand before loading them onto the system. Visually inspect the bottom of the reagent pack to ensure that all particles are dispersed and resuspended. For detailed information about preparing the reagents for use, refer to Appendix C, *Handling Reagents*.

Load the ReadyPack reagent packs in the primary reagent area using the arrows as a placement guide. The system automatically mixes the primary reagent packs to maintain homogeneous suspension of the reagents. For detailed information about loading reagents, refer to the system operating instructions or to the online help system.

If automatic dilution of a sample is required, load ADVIA Centaur Multi-Diluent 5 in the ancillary reagent entry.

CAUTION:

- Load only the number of reagent packs on the system that will be accessed during the planned run.
- It is not recommended that unaccessed reagent packs be stored on the system for longer than 72 hours.

Onboard Stability and Calibration Interval

Onboard Stability	Calibration Interval
14 days	7 days

Additionally, the ADVIA Centaur Tobramycin assay requires a two-point calibration:

- when changing lot numbers of primary reagent packs
- when replacing system components
- when quality control results are repeatedly out of range

CAUTION:

- Discard the primary reagent packs at the end of the onboard stability interval.
- Do not use reagents beyond the expiration date.

468

Master Curve Calibration

The ADVIA Centaur Tobramycin assay requires a Master Curve calibration when using a new lot number of Lite Reagent and Solid Phase. For each new lot number of Lite Reagent and Solid Phase, use the barcode reader or keyboard to enter the Master Curve values on the system. The Master Curve card contains the Master Curve values. For detailed information about entering calibration values, refer to the system operating instructions or to the online help system.

Quality Control

For detailed information about entering quality control values, refer to the system operating instructions or to the online help system.

To monitor system performance and chart trends, as a minimum requirement, two levels of quality control material should be assayed on each day that samples are analyzed. Quality control samples should also be assayed when performing a two-point calibration. Treat all quality control samples the same as patient samples.

Refer to the quality control product insert for the suggested Expected Values. If the quality control results do not fall within the Expected Values or within the laboratory's established values, do not report results. Take the following actions:

- Verify that the materials are not expired.
- Verify that required maintenance was performed.
- Verify that the assay was performed according to the instructions for use.
- Rerun the assay with fresh quality control samples.
- If necessary, contact your local technical support provider or distributor for assistance.

Sample Volume

This assay requires 50 µL of sample for a single determination. This volume does not include the unusable volume in the sample container or the additional volume required when performing duplicates or other tests on the same sample. For detailed information about determining the minimum required volume, refer to *Sample Volume Requirements* in the *ADVIA Centaur Reference Manual.*

NOTE: The sample volume required to perform onboard dilution differs from the sample volume required to perform a single determination. Refer to the following information for the sample volume required to perform onboard dilutions:

Dilution	Sample Volume (µL)
1:2	100
1:5	40

Assay Procedure

For detailed procedural information, refer to the system operating instructions or to the online help system.

Procedural Notes

Calculations

For detailed information about how the system calculates results, refer to the system operating instructions or to the online help system.

469

The system reports serum or plasma tobramycin results in µg/mL (mass units) or µmol/L (SI units), depending on the units defined when setting up the assay. The conversion formula is 1 µg/mL = 2.14 µmol/L.

Dilutions

- Serum or plasma samples with tobramycin levels greater than 13 µg/mL (27.8 µmol/L) must be diluted and retested to obtain accurate results.
- Patient samples can be automatically diluted by the system or prepared manually.
- For automatic dilutions, ensure that ADVIA Centaur Multi-Diluent 5 is loaded and set the system parameters as follows:

  Dilution point: ≤ 13 µg/mL (27.8 µmol/L)

  Dilution factor: 2, 5

  For detailed information about automatic dilutions, refer to the system operating instructions or to the online help system.
- Manually dilute the patient samples when patient results exceed the linearity of the assay using automatic dilution, or when laboratory protocol requires manual dilution.
- Use Multi-Diluent 5 to manually dilute patient samples, and then load the diluted sample in the sample rack, replacing the undiluted sample.
- Ensure that results are mathematically corrected for dilution. If a dilution factor is entered when scheduling the test, the system automatically calculates the result.

Disposal

Dispose of hazardous or biologically contaminated materials according to the practices of your institution. Discard all materials in a safe and acceptable manner, and in compliance with all federal, state, and local requirements.

Limitations

Patient samples which contain amikacin, dibekacin, kanamycin B, kanamycin A, or neomycin will yield falsely elevated values for tobramycin. However, these drugs are usually not coadministered with tobramycin.

High concentrations of β-lactam-type antibiotics (cephalosporins and penicillins) can inactivate tobramycin both *in vivo* and *in vitro*.[11,12] Analyze samples immediately from patients receiving these antibiotics in addition to tobramycin or store samples frozen at or below -20°C to prevent tobramycin inactivation *in vitro*.

Heterophilic antibodies in human serum can react with reagent immunoglobulins, interfering with *in vitro* immunoassays.[13] Patients routinely exposed to animals or to animal serum products can be prone to this interference and anomalous values may be observed. Additional information may be required for diagnosis.

Serum specimens* that are . . .	Demonstrate ≤ 4% change in results up to . . .
hemolyzed	500 mg/dL of hemoglobin
lipemic	1000 mg/dL of triglycerides
icteric	20 mg/dL of bilirubin

* These samples contained tobramycin which had been added at a concentration of approximately 7 µg/mL (15.0 µg/mL).

Expected Results

A therapeutic range of 5 to 10 µg/mL (10.7 to 21.4 µmol/L) (peak) and 0.5 to 2.0 µg/mL (1.1 to 4.3 µmol/L) (trough) has been previously reported for tobramycin.[3]

As with all therapeutic drug assays, each laboratory should determine the appropriateness of this range for the diagnostic evaluation of patient results.[14]

Performance Characteristics

Specificity

Tobramycin at approximately 7 µg/mL (15.0 µmol/L) was added to pooled serum samples. These samples were spiked with the compounds listed below to concentrations as shown. ADVIA Centaur Tobramycin assay results from the spiked samples were compared with those of unspiked control samples. These compounds did not have a significant effect on the ADVIA Centaur Tobramycin measurement ($p \geq 0.05$ t-test). The samples in the following table gave tobramycin results that differed by < 2.5% of the respective sample result (or less than 0.5% cross-reactivity). Percent cross-reactivity is calculated as:

$$\% \text{ cross-reactivity} = (100) \times \frac{(\text{analytical result} - \text{analyte concentration})}{\text{concentration of interferent}}$$

Compound	Amount Added (µg/mL)	Compound	Amount Added (µg/mL)
Amphotericin	15	Gentamicin	120
Ampicillin	50	Methotrexate	4500
Cefamandole nafate	500	Methylprednisolone	6
Cephalexin	320	Oxytetracycline	400
Cephaloridine	1200	Prednisolone	12
Cephalothin	1000	Rifampin	500
Chloramphenicol	250	Spectinomycin	1600
Ciprofloxacin	1000	Streptomycin	500
Clindamycin	90	Sulfadiazine	1500
Erythromycin	200	Sulfamethoxazole	160
Ethacrynic acid	40	Tetracycline	400
5-Fluorocytosine	30	Trimethoprim	32
Furosemide	20	Vancomycin	300
Fusidic acid	650		

In addition, the following compounds were spiked into patient serum samples containing tobramycin at a concentration of approximately 7 µg/mL (15.0 µmol/L) and the following results were obtained. Percent cross-reactivity is calculated as:

$$\% \text{ cross-reactivity} = (100) \times \frac{(\text{analytical result} - \text{analyte concentration})}{\text{concentration of interferent}}$$

Compound	Amount Added (µg/mL)	% Cross-reactivity
Amikacin	150	0.25
Dibekacin	1.0	155
Kanamycin B	1	55
Kanamycin A	300	1.50
Neomycin	600	0.17
Carbenicillin*	2000	-0.10
Cephalothin*	1000	-0.03
Methicillin*	2400	< -0.01
Peniclin G*	1000	-0.06
Peniciillin V*	100	-0.18
Ticarcillin disodium*	1000	-0.17

* These β-lactam-type antibiotics can inactivate tobramycin *in vivo* and *in vitro*. Refer to *Limitations*.

Interference testing was determined according to CLSI Document EP7-A2.[15]

Sensitivity and Assay Range

The ADVIA Centaur Tobramycin assay measures tobramycin concentrations up to 13 µg/mL (27.8 µmol/L) with a minimum detectable concentration (analytical sensitivity) of 0.18 µg/mL (0.39 µmol/L). Analytical sensitivity is defined as the concentration of tobramycin that corresponds to the RLUs that are two standard deviations less than the mean RLUs of 27 replicate determinations of the Tobramycin zero standard.

Method Comparison

For 340 samples in the range of 0.22 to 11.54 µg/mL (0.47 to 24.70 µmol/L), the relationship between the ADVIA Centaur Tobramycin assay and ACS:180® Tobramycin assay is described by the equation:

ADVIA Centaur Tobramycin = 1.03 (ACS:180 Tobramycin) – 0.05 µg/mL

Correlation coefficient (r) = 0.99

Dilution Recovery

Six human serum samples in the range of 5.66 to 10.67 µg/mL (12.11 to 22.83 µmol/L) of tobramycin were diluted 1:2, 1:4, and 1:8 with Multi-Diluent 5 and assayed for recovery and parallelism. The recoveries ranged from 91% to 120% with a mean of 106%.

Sample	Dilution	Observed (µg/mL)	Expected (µg/mL)	Observed (µmol/L)	Expected (µmol/L)	Recovery %
1	—	6.89		14.74		
	1:2	3.38	3.45	7.23	7.38	98
	1:4	1.90	1.72	4.09	3.68	111
	1:8	1.00	0.86	2.14	1.84	116
	Mean					108
2	—	5.66		12.11		
	1:2	3.20	2.83	6.85	6.06	113
	1:4	1.71	1.42	3.66	3.66	120
	1:8	0.84	0.71	1.80	1.80	118
	Mean					117

Sample	Dilution	Observed (µg/mL)	Expected (µg/mL)	Observed (µmol/L)	Expected (µmol/L)	Recovery %
3	—	6.69		14.32		
	1:2	3.46	3.35	7.40	7.17	103
	1:4	1.8	1.67	3.85	3.57	108
	1:8	0.96	0.84	2.05	1.80	114
	Mean					108
4	—	10.03		21.46		
	1:2	4.58	5.02	9.80	10.74	91
	1:4	2.37	2.51	5.07	5.37	94
	1:8	1.17	1.25	2.50	2.68	94
	Mean					93
5	—	10.67		22.83		
	1:2	5.05	5.34	10.81	11.43	95
	1:4	2.7	2.67	5.78	5.71	101
	1:8	1.36	1.33	2.91	2.84	102
	Mean					99
6	—	9.03		19.32		
	1:2	4.67	4.52	9.99	9.67	103
	1:4	2.56	2.26	5.48	4.84	113
	1:8	1.35	1.13	2.89	2.42	119
	Mean					112
Mean						**106**

Spiking Recovery

Varying amounts of tobramycin were added to five tobramycin-free serum samples. The recoveries ranged from 99% to 140% with a mean of 112%.

Sample	Amount Added (µg/mL)	Observed (µg/mL)	Amount Added (µmol/L)	Observed (µmol/L)	Recovery %
1	—	0.08	—	0.17	
	1	1.20	2.14	2.57	120
	3	3.20	6.42	6.85	107
	5	5.37	10.70	11.49	107
	7	6.91	14.98	14.78	99
	9	9.52	19.26	20.37	106
	Mean				108
2	—	0.09	—	0.19	
	1	1.40	2.14	3.00	140
	3	3.14	6.42	6.72	105
	5	5.85	10.70	12.52	117
	7	7.47	14.98	15.99	107
	9	9.48	19.26	20.29	105
	Mean				115
3	—	0	—	0	
	1	1.13	2.14	2.42	113
	3	3.26	6.42	6.98	109
	5	5.40	10.70	11.56	108
	7	7.51	14.98	16.07	107
	9	10.22	19.26	21.87	114
	Mean				110
4	—	0.01	—	0.02	
	1	1.25	2.14	2.68	125
	3	3.35	6.42	7.17	112
	5	5.41	10.70	11.58	108
	7	7.56	14.98	16.18	108
	9	11.50	19.26	24.61	128
	Mean				116

473

Sample	Amount Added (µg/mL)	Observed (µg/mL)	Amount Added (µmol/L)	Observed (µmol/L)	Recovery %
5	—	0.05	—	0.11	
	1	1.33	2.14	2.85	133
	3	3.36	6.42	7.19	112
	5	5.65	10.70	12.09	113
	7	8.01	14.98	17.14	114
	9	10.27	19.26	21.98	114
	Mean				117
Mean					**113**

Precision

Four samples were assayed 6 times in 4 runs, on each of 3 systems (n = 24 for each sample), over a period of 2 days. The following results were obtained:

Mean (µg/mL)	Mean (µmol/L)	Within-run % CV	Run-to-run % CV	Total % CV
1.56	3.34	3.14	2.12	3.79
3.93	8.41	3.29	2.22	3.97
7.94	16.99	3.01	3.65	4.73
10.95	23.43	2.67	2.32	3.54

Traceability of Standardization

The ADVIA Centaur Tobramycin assay is traceable to an internal standard manufactured using U.S.P. (United States Pharmacopeia) material. Assigned values of calibrators and ranges of Ligand Plus controls are traceable to this standardization.

Technical Assistance

For customer support, please contact your local technical support provider or distributor.

www.siemens.com/diagnostics

References

1. Chambers HF, Sande MA. Antimicrobial agents: the aminoglycosides. In: GL Hardman, LL Limbird, PB Molinoff, RW Ruddon, Goodman & Gilman's the pharmacological basis of therapeutics, 9th ed. NY: McGraw-Hill, 1996;1103–1121.
2. Drug evaluations annual. American Medical Association, 1995:1537–1556.
3. Schaible DH. Therapeutic drug monitoring of aminoglycoside therapy: relationship to efficacy and toxicity. In: TP Moyer, RL Boeckx, Applied therapeutic drug monitoring. volume II: review and case studies. American Association for Clinical Chemistry, 1982;177–203.
4. Wenk M, Vozeh S, Follath F. Serum level monitoring of antibacterial drugs: a review. Clinical Pharmacokinetics, 1984;9:475–492.
5. Physician's GenRx 1994. NY: Data Pharmaceutica Inc., 1994; II-2147–2150.
6. Reagent Water Technical Bulletin. Siemens Healthcare Diagnostics, 107060.
7. Clinical and Laboratory Standards Institute (formerly NCCLS). *Procedures for the Handling and Processing of Blood Specimens; Approved Guideline - Third Edition.* Wayne, PA: Clinical and Laboratory Standards Institute; 2004. NCCLS Document H18-A3.
8. Centers for Disease Control. 1988. Update: Universal precautions for prevention of transmission of human immunodeficiency virus, hepatitis B virus and other bloodborne pathogens in healthcare settings. MMWR, 37:377, 387, 388.
9. Clinical and Laboratory Standards Institute (formerly NCCLS). *Protection of Laboratory Workers From Occupationally Acquired Infections; Approved Guideline - Third Edition.* Wayne, PA: Clinical and Laboratory Standards Institute; 2005. CLSI Document M29-A3.
10. Federal Occupational Safety and Health Administration, Bloodborne Pathogens Standard, 29 CFR 1910.1030.
11. Tindula RJ, Ambrose PH, Harralson AF. Aminoglycoside inactivation by penicillins and cephalosporins and its impact on drug-level monitoring. Drug Intell Clin Pharm 1983;17:906–8.

12. Riff LJ ,Thomason JL. Comparative aminoglycoside inactivation by β-lactam antibiotics effect of a cephalosporin and six penicillins on five aminoglycosides. J Antibiotics 1982;35:850–7.
13. Boscato LM, Stuart MC. Heterophilic antibodies: a problem for all immunoassays. Clin Chem 1988;34:27–33.
14. Clinical and Laboratory Standards Institute (formerly NCCLS). *How to Define and Determine Reference Intervals in the Clinical Laboratory; Approved Guideline - Second Edition.* Wayne, PA: Clinical and Laboratory Standards Institute; 2000. NCCLS Document C28-A2.
15. Clinical and Laboratory Standards Institute (formerly NCCLS). *Interference Testing Clinical Chemistry; Approved Guideline - Second Edition.* Wayne, PA: Clinical and Laboratory Standards Institute; 2005. CLSI Document EP7-A2.

ADVIA Centaur, ReadyPack, and ACS:180 are trademarks of Siemens Healthcare Diagnostics.

© 2008 Siemens Healthcare Diagnostics Inc. All rights reserved.

US Pats 4,918,192; 5,110,932; 5,656,426; 5,609,822; 5,788,928

Origin: US

Siemens Healthcare Diagnostics Inc.
Tarrytown, NY 10591-5097 USA

EC REP Siemens Healthcare Diagnostics Ltd.
Sir William Siemens Sq.
Frimley, Camberley, UK GU16 8QD

Siemens Healthcare
Diagnostics Pty Ltd
885 Mountain Highway
Bayswater Victoria 3153
Australia

シーメンスヘルスケア・
ダイアグノスティクス株式会社
東京都品川区東五反田 3－20－14
Siemens Healthcare Diagnostics
輸入

476

Total hCG

Assay Summary

Sample Type	***Serum***
Sample Volume	***50 µL***
Calibrator	***B***
Sensitivity and Assay Range	***2.0–1000 mIU/mL (IU/L)***

Contents

REF	*Contents*	*Number of Tests*
00643953	5 ReadyPack® primary reagent packs containing ADVIA Centaur® Total hCG Lite Reagent and Solid Phase ADVIA Centaur Total hCG Master Curve card	250
or		
00638631	1 ReadyPack primary reagent pack containing ADVIA Centaur Total hCG Lite Reagent and Solid Phase ADVIA Centaur Total hCG Master Curve card	50

Intended Use

For *in vitro* diagnostic use in the quantitative determination of human chorionic gonadotropin (hCG) in serum using the ADVIA Centaur and ADVIA Centaur XP systems. The results obtained from hCG specimens are used as an aid in the assessment of pregnancy status. This assay detects the intact hCG molecule and free beta subunits of the hCG molecule.

Materials Required but Not Provided

REF	*Description*	*Contents*
00652707	Calibrator B	6 vials of low calibrator 6 vials of high calibrator
or		
00649625	Calibrator B	2 vials of low calibrator 2 vials of high calibrator

Optional Reagents

REF	*Description*	*Contents*
117157	ADVIA Centaur ThCG Diluent	6 ReadyPack ancillary reagent packs containing 25 mL/pack
or		
117143	ADVIA Centaur ThCG Diluent	2 ReadyPack ancillary reagent packs containing 25 mL/pack
115249	ThCG Diluent	50 mL/vial
00655293	ThCG Master Curve Material	10 x 1 mL

Summary and Explanation of the Test

Human chorionic gonadotropin (hCG) is a glycoprotein with two non-covalently bound subunits. The alpha subunit is similar to those of luteinizing hormone (LH), follicle-stimulating hormone (FSH), and thyroid-stimulating hormone (TSH).[1,2]

477

The beta subunit of hCG differs from other pituitary glycoprotein hormones, which results in its unique biochemical and immunological properties. HCG is synthesized by the cells of the placenta and is involved in maintaining the corpus luteum during pregnancy. It is detected as early as one week after conception.[1]

In pregnancy, the levels of hCG increase exponentially for about 8 to 10 weeks after the last menstrual cycle. Later in pregnancy, about 12 weeks after conception, the concentration of hCG begins to fall as the placenta begins to produce steroid hormones.

Other sources of elevated hCG values are ectopic pregnancy, threatened abortion, and recent termination of pregnancy.

Assay Principle

The ADVIA Centaur Total hCG (ThCG) assay is a two-site sandwich immunoassay using direct chemiluminometric technology, which uses constant amounts of two antibodies. The first antibody, in the Lite Reagent, is a polyclonal goat anti-hCG antibody that has been affinity purified and labeled with acridinium ester. The second antibody, in the Solid Phase, is a purified monoclonal mouse anti-hCG antibody, which is covalently coupled to paramagnetic particles. These two antibodies are specific for different epitopes that are present on both the free β subunit and the β subunit of intact hCG.

The system automatically performs the following actions:

- dispenses 50 µL of sample into a cuvette
- dispenses 100 µL of Lite Reagent and 450 µL of Solid Phase and incubates for 7.5 minutes at 37°C
- separates, aspirates, and washes the cuvettes with reagent water[3]
- dispenses 300 µL each of Acid Reagent and Base Reagent to initiate the chemiluminescent reaction
- reports results according to the selected option, as described in the system operating instructions or in the online help system

A direct relationship exists between the amount of hCG present in the patient sample and the amount of relative light units (RLUs) detected by the system.

Specimen Collection and Handling

Serum is the recommended sample type for this assay.

The following recommendations for handling and storing blood samples are furnished by the Clinical and Laboratory Standards Institute (CLSI, formerly NCCLS):[4]

- Collect all blood samples observing universal precautions for venipuncture.
- Allow samples to clot adequately before centrifugation.
- Keep tubes stoppered and upright at all times.
- Do not use samples that have been stored at room temperature for longer than 8 hours.
- Tightly cap and refrigerate specimens at 2 to 8°C if the assay is not completed within 8 hours.
- Freeze samples at or below -20°C if the sample is not assayed within 48 hours.
- Freeze samples only once and mix thoroughly after thawing.

478

Before placing samples on the system ensure that:

- Samples are free of fibrin or other particulate matter.
- Samples are free of bubbles.

Reagents

Store the reagents upright at 2–8°C.
Mix all primary reagent packs by hand before loading them onto the system. Visually inspect the bottom of the reagent pack to ensure that all particles are dispersed and resuspended. For detailed information about preparing the reagents for use, refer to Appendix C, *Handling Reagents*.

Reagent Pack	Reagent	Volume	Ingredients	Storage	Stability
ADVIA Centaur Total hCG ReadyPack primary reagent pack	Lite Reagent	5.0 mL/ reagent pack	polyclonal goat anti-hCG antibody (~0.1 µg/mL) labeled with acridinium ester in buffered saline with sodium azide (0.1%) and preservatives	2–8°C	until the expiration date on the pack label. For onboard stability, refer to *Onboard Stability and Calibration Interval.*
	Solid Phase	22.5 mL/ reagent pack	monoclonal mouse anti-hCG antibody (~0.02 mg/ mL) covalently coupled to paramagnetic particles in buffered saline with sodium azide (0.1%) and preservatives	2–8°C	until the expiration date on the pack label. For onboard stability, refer to *Onboard Stability and Calibration Interval.*
ADVIA Centaur ThCG Diluent ReadyPack ancillary reagent pack	ThCG Diluent	25.0 mL/ reagent pack	buffered heat-treated equine serum with EDTA, sodium azide (< 0.1%), and preservatives	2–8°C	until the expiration date on the pack label or 28 consecutive days after accessing the ancillary reagent pack

WARNING: Sodium azide can react with copper and lead plumbing to form explosive metal azides. On disposal, flush reagents with a large volume of water to prevent the buildup of azides, if disposal into a drain is in compliance with federal, state, and local requirements.

Harmful! Harmful if swallowed. After contact with skin, wash immediately with plenty of soap and water. **Contains:** sodium azide; Lite Reagent, Solid Phase

CAUTION: This device contains material of animal origin and should be handled as a potential carrier and transmitter of disease.

For *in vitro* diagnostic use.

Loading Reagents

Ensure that the system has sufficient primary and ancillary reagent packs. For detailed information about preparing the system, refer to the system operating instructions or to the online help system.

CAUTION: Mix all primary reagent packs by hand before loading them onto the system. Visually inspect the bottom of the reagent pack to ensure that all particles are dispersed and resuspended. For detailed information about preparing the reagents for use, refer to Appendix C, *Handling Reagents*.

Load the ReadyPack reagent packs in the primary reagent area using the arrows as a placement guide. The system automatically mixes the primary reagent packs to maintain homogeneous suspension of the reagents. For detailed information about loading reagents, refer to the system operating instructions or to the online help system.

479

NOTE: When performing the ADVIA Centaur ThCG assay, use even lot number ThCG reagents with even lot number Calibrator B or odd lot number ThCG reagents with odd lot number Calibrator B.

If automatic dilution of a sample is required, load ADVIA Centaur ThCG Diluent in the ancillary reagent entry.

Onboard Stability and Calibration Interval

Onboard Stability	Calibration Interval
21 days	28 days

Additionally, the ADVIA Centaur Total hCG assay requires a two-point calibration:

- when changing lot numbers of primary reagent packs
- when replacing system components
- when quality control results are repeatedly out of range

CAUTION:

- Discard the primary reagent packs at the end of the onboard stability interval.
- Do not use reagents beyond the expiration date.

Master Curve Calibration

The ADVIA Centaur Total hCG assay requires a Master Curve calibration when using a new lot number of Lite Reagent and Solid Phase. For each new lot number of Lite Reagent and Solid Phase, use the barcode reader or keyboard to enter the Master Curve values on the system. The Master Curve card contains the Master Curve values. For detailed information about entering calibration values, refer to the system operating instructions or to the online help system.

Quality Control

For detailed information about entering quality control values, refer to the system operating instructions or to the online help system.

To monitor system performance and chart trends, as a minimum requirement, two levels of quality control material should be assayed on each day that samples are analyzed. Quality control samples should also be assayed when performing a two-point calibration. Treat all quality control samples the same as patient samples.

Siemens Healthcare Diagnostics recommends the use of commercially available quality control materials with at least 2 levels (low and high). A satisfactory level of performance is achieved when the analyte values obtained are within the Acceptable Control Range for the system or within your range, as determined by an appropriate internal laboratory quality control scheme.

If the quality control results do not fall within the Expected Values or within the laboratory's established values, do not report results. Take the following actions:

- Verify that the materials are not expired.
- Verify that required maintenance was performed.
- Verify that the assay was performed according to the instructions for use.
- Rerun the assay with fresh quality control samples.
- If necessary, contact your local technical support provider or distributor for assistance.

480

Sample Volume

This assay requires 50 µL of sample for a single determination. This volume does not include the unusable volume in the sample container or the additional volume required when performing duplicates or other tests on the same sample. For detailed information about determining the minimum required volume, refer to *Sample Volume Requirements* in the *ADVIA Centaur Reference Manual.*

Assay Procedure

For detailed procedural information, refer to the system operating instructions or to the online help system.

Procedural Notes

Calculations

For detailed information about how the system calculates results, refer to the system operating instructions or to the online help system.

The system reports serum hCG results in mIU/mL (mass units) or IU/L (SI units), depending on the units defined when setting up the assay. The conversion formula is 1 mIU/mL = 1 IU/L.

Dilutions

- Serum samples with hCG levels greater than 1000 mIU/mL (IU/L) must be diluted and retested to obtain accurate results.
- Patient samples can be automatically diluted by the system or prepared manually.
- For automatic dilutions, ensure that ADVIA Centaur ThCG Diluent is loaded and set the system parameters as follows:

  Dilution point: ≤ 1000 mIU/mL (IU/L)

  Dilution factor: 5, 10, 100, 200

  For detailed information about automatic dilutions, refer to the system operating instructions or to the online help system.
- Manually dilute the patient samples when patient results exceed the linearity of the assay using automatic dilution, or when laboratory protocol requires manual dilution.
- Use ThCG Diluent to manually dilute patient samples, and then load the diluted sample in the sample rack, replacing the undiluted sample.
- Ensure that results are mathematically corrected for dilution. If a dilution factor is entered when scheduling the test, the system automatically calculates the result.

High-Dose Hook Effect

Patient samples with high hCG levels can cause a paradoxical decrease in the RLUs (high-dose hook effect). In this assay, patient samples with hCG levels as high as 400,000 mIU/mL (IU/L) will assay greater than 1000 mIU/mL (IU/L).

Disposal

Dispose of hazardous or biologically contaminated materials according to the practices of your institution. Discard all materials in a safe and acceptable manner, and in compliance with all federal, state, and local requirements.

Limitations

This test may be used for detecting pregnancy by the first day of the missed menstrual period.

All *in vitro* assays can generate erroneous results, both clinically false positive results (test results suggesting a condition that is absent) and clinically false negative results (test results failing to identify a condition that is present).

There are many possible causes for these types of discordant results. Erroneous results may occur due to interference from identifiable serum constituents or patient-specific serum constituents.

Erroneous results due to interference are repeatable over time.

Persistent serum hCG results in the range of 10 to 100 mIU/mL (more typically 10 to 50 mIU/mL) over several months suggests that the patient's blood may contain an interfering substance and produce erroneous results.

Identified sources of interference that have the potential to bind to and interfere with any component of the assay include:

- plasma components (clotting factors)
- serum proteins (e.g. rheumatoid factor)
- heterophile and anti-animal antibodies (anti-mouse, anti-rabbit, anti-goat, etc.)
- anti-idiotype antibodies

Interference can also be caused by:

- drugs and drug metabolites
- cross-reacting substances

If an aberrant or abnormal result, as defined by the laboratory protocol, occurs, laboratory personnel should first make certain that the system is performing and is operated and maintained in accordance with the Product Labeling. The user should then follow the laboratory protocol for advising the clinician of a result that appears to have deviated from the norms established by the laboratory.

Test results alone are not diagnoses of medical conditions. For example, low titer elevations of hCG can occur in normal non-pregnant subjects. A physician's diagnosis involves evaluation of the test result in conjunction with, and in the context of, the patient's medical history, physical examination, and other test results – sometimes in consultation with other medical experts.

This kit is not intended for any use other than assessment of pregnancy status.

Serum specimens that are . . .	*Have an insignificant effect on the assay up to . . .*
hemolyzed	500 mg/dL of hemoglobin
lipemic	1000 mg/dL of triglycerides
icteric	20 mg/dL of bilirubin

Expected Results

The expected results for the ADVIA Centaur Total hCG assay were established. Data was obtained on 89 serum samples from 30 apparently healthy nonpregnant females, 30 apparently healthy males, and 29 post menopausal females. 100% of these samples yielded hCG values less than 10 mIU/mL (IU/L).

482

The levels of hCG found during normal pregnancy have been well documented and are presented in the following table.[2] The production of hCG is extremely rapid following conception and is variable among individuals. A negative value does not rule out pregnancy. A patient with a negative result should be redrawn in 2 days and assayed again because hCG values in normal pregnancy double every 48 hours.

Gestational Age	Expected hCG Values (mIU/mL) (IU/L)
0.2–1 week	5–50
1–2 weeks	50–500
2–3 weeks	100–5,000
3–4 weeks	500–10,000
4–5 weeks	1,000–50,000
5–6 weeks	10,000–100,000
6–8 weeks	15,000–200,000
2–3 months	10,000–100,000

As with all diagnostic assays, each laboratory should determine its own reference range(s) for the diagnostic evaluation of patient results.[5]

Performance Characteristics

Specificity

The cross-reactivity of the ADVIA Centaur Total hCG assay with TSH, LH, FSH, prolactin, and hGH was determined by adding these hormones to serum samples containing hCG. The level of hCG in the samples was then determined.

Cross-reactant	hCG Value without Cross-reactant (mIU/mL) (IU/L)	hCG Value with Cross-reactant (mIU/mL) (IU/L)
TSH; 300 µIU/mL	19.9	17.7
	96.5	87.7
	624.0	574.0
LH; 200 mIU/mL	12.9	12.0
	214.7	197.6
	556.9	505.0
FSH; 200 mIU/mL	12.9	12.4
	214.7	213.1
	556.9	555.2
Prolactin; 1000 ng/mL	12.9	12.5
	214.7	217.2
	556.9	561.0
hGH; 500 ng/mL	12.9	12.5
	214.7	212.5
	556.9	555.4

Interference testing was determined according to CLSI Document EP7-A2.[6]

Sensitivity and Assay Range

The ADVIA Centaur Total hCG assay measures hCG concentrations up to 1000 mIU/mL (IU/L) with a minimum detectable concentration (analytical sensitivity) of 2.0 mIU/mL (IU/L). Analytical sensitivity is defined as the concentration of hCG that corresponds to the RLUs that are two standard deviations greater than the mean RLUs of 20 replicate determinations of the Total hCG zero standard.

483

Method Comparison

For 230 samples in the range of 3.0 to 985.8 mIU/mL (IU/L), the relationship between the ADVIA Centaur Total hCG assay and the ACS:180® Total hCG assay is described by the equation:

ADVIA Centaur Total hCG = 1.04 (ACS:180 Total hCG) + 3.14 mIU/mL

Correlation coefficient (r) = 0.99

Dilution Recovery

Six human serum samples in the range of 343.6 to 890.1 mIU/mL (IU/L) of hCG were diluted 1:2, 1:4, 1:8, and 1:16 with ThCG Diluent and assayed for recovery and parallelism. The recoveries ranged from 89.3% to 111.6% with a mean of 100.3%.

Sample	Dilution	Observed (mIU/mL) (IU/L)	Expected (mIU/mL) (IU/L)	Recovery %
1	—		890.1	
	1:2	428.7	445.1	96.3
	1:4	221.2	222.5	99.4
	1:8	110.2	111.3	99.0
	1:16	54.8	55.6	98.6
	Mean			98.3
2	—		663.9	
	1:2	341.2	332.0	102.8
	1:4	173.1	166.0	104.3
	1:8	89.5	83.0	107.8
	1:16	42.8	41.5	103.1
	Mean			104.5
3	—		863.6	
	1:2	385.5	431.8	89.3
	1:4	199.0	215.9	92.2
	1:8	101.6	108.0	94.1
	1:16	48.8	54.0	90.3
	Mean			91.5
4	—		343.6	
	1:2	186.6	171.8	108.6
	1:4	95.9	85.9	111.6
	1:8	46.4	43.0	107.9
	1:16	23.2	21.5	107.9
	Mean			109.0
5	—		716.9	
	1:2	337.7	358.5	94.2
	1:4	172.1	179.2	96.0
	1:8	87.3	89.6	97.4
	1:16	42.6	44.8	95.1
	Mean			95.7

484

Sample	Dilution	Observed (mIU/mL) (IU/L)	Expected (mIU/mL) (IU/L)	Recovery %
6	—		646.2	
	1:2	327.9	323.1	101.4
	1:4	166.4	161.6	102.9
	1:8	82.7	80.8	102.4
	1:16	41.8	40.4	103.5
	Mean			102.6
Mean				**100.3**

Spiking Recovery

Varying amounts of hCG were added to five samples with endogenous hCG levels of 4.9 to 13.1 mIU/mL (IU/L). The recoveries ranged from 95.2% to 105.0% with a mean of 99.0%.

Sample	Amount Added (mIU/mL) (IU/L)	Observed (mIU/mL) (IU/L)	Recovery %
1	—	12.8	
	57.5	70.5	100.4
	112.1	124.9	100.0
	223.9	236.8	100.0
	423.5	426.0	97.6
	818.4	821.9	98.9
	Mean		99.4
2	—	4.9	
	57.5	61.8	99.0
	112.1	118.7	101.5
	223.9	220.9	96.5
	423.5	427.6	99.8
	818.4	810.0	98.4
	Mean		99.0
3	—	13.1	
	51.7	63.9	98.3
	98.8	112.2	100.3
	206.8	211.2	95.8
	380.0	378.7	96.2
	798.3	790.8	97.4
	Mean		97.6
4	—	11.3	
	51.7	63.1	100.2
	98.8	115.0	105.0
	206.8	223.9	102.8
	380.0	403.1	103.1
	798.3	795.2	98.2
	Mean		101.9
5	—	5.7	
	51.7	58.0	95.4
	98.8	111.4	98.2
	206.8	216.5	98.7
	380.0	387.3	95.2
	798.3	776.2	96.8
	Mean		96.9
Mean			**99.0**

485

Precision

Six samples were assayed 6 times, in each of 12 runs, on 3 systems, (n = 72 for each sample), over a period of 3 days. The following results were obtained:

Mean (mIU/mL) (IU/L)	Within-run % CV	Run-to-run % CV	Total % CV
6.9	3.9	2.0	4.4
14.6	2.7	4.3	5.1
20.6	2.3	2.7	3.6
161.2	2.8	2.7	3.8
493.0	2.1	2.4	3.2
638.5	2.6	1.7	3.1

Standardization

The ADVIA Centaur CP Total hCG assay is standardized against the World Health Organization (WHO) 4th IS 75/589 reference material.

Technical Assistance

For customer support, contact your local technical support provider or distributor.

www.siemens.com/diagnostics

References

1. Russell PT. Pregnancy and fetal function. In: Kaplan LA, Pesce AJ, editors. Clinical chemistry: theory, analysis, and correlation. 2nd ed. St. Louis: CV Mosby, 1989. p.572.
2. Kaplan LA. Human chorionic gonadotropin. In: Kaplan LA, Pesce AJ, editors. Clinical chemistry: theory, analysis, and correlation. 2nd ed. St. Louis: CV Mosby, 1989. p.938–44.
3. Reagent Water Technical Bulletin. Siemens Healthcare Diagnostics, 107060.
4. Clinical and Laboratory Standards Institute (formerly NCCLS). *Procedures for the Handling and Processing of Blood Specimens; Approved Guideline - Third Edition.* Wayne, PA: Clinical and Laboratory Standards Institute; 2004. NCCLS Document H18-A3.
5. Clinical and Laboratory Standards Institute (formerly NCCLS). *How to Define and Determine Reference Intervals in the Clinical Laboratory; Approved Guideline - Second Edition.* Wayne, PA: Clinical and Laboratory Standards Institute; 2000. NCCLS Document C28-A2.
6. Clinical and Laboratory Standards Institute (formerly NCCLS). *Interference Testing in Clinical Chemistry; Approved Guideline - Second Edition.* Wayne, PA: Clinical and Laboratory Standards Institute; 2005. CLSI document EP7-A2.

ADVIA Centaur, ReadyPack, and ACS:180 are trademarks of Siemens Healthcare Diagnostics.

© 2008 Siemens Healthcare Diagnostics Inc. All rights reserved.

US Pats 5,110,932; 5,609,822; 5,788,928

Origin: US

Siemens Healthcare Diagnostics Inc.
Tarrytown, NY 10591-5097 USA

EC REP Siemens Healthcare Diagnostics Ltd.
Sir William Siemens Sq.
Frimley, Camberley, UK GU16 8QD

Siemens Healthcare
Diagnostics Pty Ltd
885 Mountain Highway
Bayswater Victoria 3153
Australia

シーメンスヘルスケア・
ダイアグノスティクス株式会社
東京都品川区東五反田3−20−14
Siemens Healthcare Diagnostics
輸入

486

Toxoplasma G (Toxo G)

Assay for the Detection of IgG Antibodies to *Toxoplasma gondii*

Assay Summary

Sample Type	**Serum, Heparinized Plasma, EDTA Plasma**
Sample Volume	**10 µL**
Calibrator	**Toxo G**
Sensitivity and Assay Range	**0.5–700 IU/mL**

Contents

REF	Contents	Number of Tests
04520287 (120154)	1 ReadyPack® primary reagent pack containing ADVIA Centaur® Toxo G Lite Reagent and Solid Phase	100
	ADVIA Centaur Toxo G Master Curve card	
	1 vial Toxo G Low Calibrator CAL L	
	1 vial Toxo G High Calibrator CAL H	
	ADVIA Centaur Toxo G Calibrator Assigned Value card	

For a definition of symbols used in product labeling, refer to *Understanding the Symbols* in Appendix D of the Assay Guide.

Intended Use

The ADVIA Centaur Toxoplasma IgG assay is an IgG-antibody capture microparticle direct *in vitro* diagnostic immunoassay intended for the quantitative and qualitative detection of IgG antibodies to the *Toxoplasma gondii* parasite in human serum or plasma (EDTA, heparin) using the ADVIA Centaur and ADVIA Centaur XP systems. The measurement of Toxoplasma IgG may be used to aid in the assessment of a patient's immunological response from individuals including women of childbearing age. This assay may be utilized with an IgM Toxoplasma result to determine recent serological response to Toxoplasma.

WARNING: The use of the ADVIA Centaur Toxoplasma IgG assay to diagnose recent infection by testing acute and convalescent samples is not recommended. The calculated values for toxoplasma IgG in a given specimen, as determined by assays from different manufacturers, can vary due to differences in assay methods and reagent specificity. The results reported by the laboratory to the physician must include the identity of the toxoplasma IgG assay used. Values obtained with different assay methods cannot be used interchangeably.

This assay has not been cleared or approved by the FDA for the screening of blood or plasma donors. Testing should not be performed as a screening procedure for the general population.

487

Materials Required but Not Provided

REF	Description	Contents
06317233 (120382)	ADVIA Centaur Toxo G quality control material	2 x 2.7 mL Negative Control CONTROL -
		2 x 2.7 mL Positive Control CONTROL +
		Expected Value card
01137199 (112351)	ADVIA Centaur Wash 1 WASH 1	2 x 1500 mL/pack
or 03773025	ADVIA Centaur Wash 1 WASH 1 *	2 x 2500 mL/pack

*for use with systems with 2500 mL capacity

Summary and Explanation of the Test

Toxoplasma gondii is an intracellular parasitic protozoan that affects birds and mammals, with cats being the primary host. Infection is typically spread by eating raw or undercooked meat containing cysts or by coming in contact with oocyst-infected cat feces. Climate, dietary customs, and presence of cats influence the prevalence of *T. gondii,* which can vary considerably by geographical location and age. In healthy immunocompetent individuals, infections are usually asymptomatic or subclinical. If toxoplasmosis is diagnosed during the early stages of infection, the disease can be treated effectively with antibiotic therapy.

In pregnant women, *T. gondii* infection poses a potential threat to the fetus. The risk of a pregnant woman passing infection to the fetus is approximately 25% in the first trimester and increases to approximately 65% in the third trimester.[1] The earlier in the pregnancy that the mother is infected the greater the potential severity of congenital toxoplasmosis. If the fetus becomes infected, the infant may have symptoms such as lymphadenopathy, chorioretinitis, microcephaly and cerebral calcifications.

In immunosuppressed populations, such as cancer patients undergoing chemotherapy, transplants recipients, and AIDS patients, *T. gondii* has emerged as an important opportunistic pathogen leading to severe or fatal infections.[2,3] The immunosuppressed state of these patients is thought to allow reactivation of a latent infection[3], and these patients may present symptoms such as headaches, confusion, fever, and focal neurological deficits.

The use of toxoplasma IgG assays has been shown to be a reliable method for establishing serological status and evaluating susceptibility to *T. gondii* infection. The presence of IgG antibodies indicates that the individual has been infected with toxoplasma in the past, but the level of reactivity does not indicate how recently the infection occurred. In the majority of AIDS patients, the IgG response to primary *T. gondii* infection often lacks a significant rise in IgG titers.[4]

Assay Principle

The ADVIA Centaur Toxoplasma G assay is an immunoglobulin class-capture sandwich immunoassay using direct, chemiluminometric technology. The anti-human IgG_{Fc} monoclonal antibody is covalently coupled to paramagnetic particles in the Solid Phase. In the Lite Reagent, the purified *T. gondii* antigen is bound to an anti-p30 monoclonal labeled with acridinium ester. Antibody-antigen complexes will form if toxoplasma IgG is present in the sample.

488

The system automatically performs the following actions:

- Dispenses 10 µL of sample into a cuvette.
- Dispenses 250 µL of Solid Phase and incubates the mixture for 18 minutes at 37°C.
- Separates the Solid Phase from the mixture and aspirates the unbound reagent.
- Washes the cuvette with Wash 1.
- Dispenses 100 µL Lite Reagent and incubates the mixture for 18 minutes at 37°C.
- Separates the Solid Phase from the mixture and aspirates the unbound reagent.
- Washes the cuvette with Wash 1.
- Dispenses 300 µL each of Acid Reagent and Base Reagent to initiate the chemiluminescent reaction.
- Reports results according to the selected option, as described in the system operating instructions or in the online help system.

A direct relationship exists between the amount of toxoplasma IgG activity present in the patient sample and the amount of relative light units (RLUs) detected by the system. A result of reactive (positive) or nonreactive (negative) is determined using a clinical cutoff value of 10 IU/mL. Refer to Interpretation of Results for a description.

Specimen Collection and Handling

Serum, heparinized plasma, or EDTA plasma are the recommended sample types for this assay. Do not use heat inactivated specimens. The performance of the ADVIA Centaur Toxoplasma G assay has not been established with cord blood, neonatal specimens, cadaver specimens, or body fluids other than serum or plasma such as saliva, urine, amniotic, or pleural fluids.

- Handle all samples as if capable of transmitting disease.
- Test samples as soon as possible after collecting. Store samples at 2° to 8°C if not tested immediately.
- Store serum specimens at 2° to 8°C up to 7 days. Specimens may be stored on the clot.
- Freeze samples, devoid of red blood cells, at or below -20°C for longer storage. Do not store in frost-free freezer. When weakly positive samples and negative samples were subject to 3 freeze/thaw cycles, no qualitative differences were observed.
- Package and label samples for shipment in compliance with applicable federal and international regulations covering the transport of clinical samples and etiological agents. Serum samples maintained at room temperature up to 7 days or refrigerated up to 14 days demonstrated no qualitative differences. Store samples at 2° to 8°C upon arrival. If shipment is expected to exceed 7 days, ship specimens frozen.
- Handle plasma specimens as per Clinical and Laboratory Standards Institute (CLSI, formerly NCCLS) H18-A3, *Procedures for the Handling and Processing of Blood Specimens*.[5]

Before placing samples on the system, ensure that samples have the following characteristics:

- Samples are free of fibrin or other particulate matter. Remove particulates by filtration or centrifugation at 1000 x g for 10 to 15 minutes.
- Samples are free of bubbles.

489

Reagents

Store the reagents upright at 2–8°C.
Mix all primary reagent packs by hand before loading them onto the system. Visually inspect the bottom of the reagent pack to ensure that all particles are dispersed and resuspended. For detailed information about preparing the reagents for use, refer to Appendix C, *Handling Reagents*.

Reagent Pack	Reagent	Volume	Ingredients	Storage	Stability
ADVIA Centaur Toxo G ReadyPack primary reagent pack	Lite Reagent	10.0 mL/ reagent pack	purified *T. gondii* p30 antigen (~1.05 µg/mL) complexed with mouse anti-p30 monoclonal antibody labeled with acridinium ester in protein buffer with surfactant and preservatives	2–8°C	Until the expiration date on the pack label. For onboard stability, refer to Onboard Stability and Calibration Interval.
	Solid Phase	25.0 mL/ reagent pack	mouse anti-human IgG_{Fc} monoclonal antibody (~0.3 mg/mL) covalently coupled to paramagnetic particles in protein buffer with surfactant and preservatives	2–8°C	Until the expiration date on the pack label. For onboard stability, refer to Onboard Stability and Calibration Interval.
Toxo G calibrator vials	Calibrators	1.0 mL/ vial	processed defibrinated human plasma positive for toxoplasma IgG antibodies with preservatives	2–8°C	Until the expiration date on the vial or onboard–8 hours.
Toxo G quality control material vials*	Controls	2.7 mL/ vial	processed defibrinated human plasma negative and positive for toxoplasma IgG antibodies with preservatives	2–8°C	Until the expiration date on the vial or onboard–8 hours.
ADVIA Centaur WASH 1 *	Wash 1	1500 mL/ pack	phosphate buffered saline with sodium azide (< 0.1%) and surfactant	2–25°C	Until the expiration date on the vial or onboard–1 month.
ADVIA Centaur WASH 1 *	Wash 1	2500 mL/ pack	phosphate buffered saline with sodium azide (< 0.1%) and surfactant	2–25°C	Until the expiration date on the vial or onboard–1 month.

* See *Materials Required but Not Provided.*

CAUTION! POTENTIAL BIOHAZARD: Contains human source material. While each human serum or plasma donor unit used in the manufacture of this product was tested by FDA-approved methods and found nonreactive for hepatitis B surface antigen (HBsAg), antibody to hepatitis C (HCV), and antibody to HIV-1/2, all products manufactured using human source material should be handled as potentially infectious. Because no test method can offer complete assurance that hepatitis B or C viruses, HIV, or other infectious agents are absent, these products should be handled according to established good laboratory practices.[6-8]

CAUTION: This device contains material of animal origin and should be handled as a potential carrier and transmitter of disease.

NOTE: Sodium azide can react with copper and lead plumbing to form explosive metal azides. On disposal, flush reagents with a large volume of water to prevent the buildup of azides, if disposal in a drain is in compliance with federal, state, and local requirements.

For *in vitro* diagnostic use.

490

Loading Reagents

Ensure that the system has sufficient primary reagent packs. For detailed information about preparing the system, refer to the system operating instructions or to the online help system.

Mix all primary reagent packs by hand before loading them onto the system. Visually inspect the bottom of the reagent pack to ensure that all particles are dispersed and resuspended. For detailed information about preparing the reagents for use, refer to Appendix C, *Handling Reagents*.

Load the ReadyPack primary reagent packs in the primary reagent compartment using the arrows on the packs as a placement guide. The system automatically mixes the primary reagent packs to maintain homogeneous suspension of the reagents. For detailed information about loading reagents, refer to the system operating instructions or to the online help system.

NOTE: The Low and High Calibrators provided in this kit are matched to the ReadyPack primary reagent pack. Do not mix calibrator lots with different lots of reagent packs.

Onboard Stability and Calibration Interval

Onboard Stability	Calibration Interval
28 days	14 days

Additionally, the ADVIA Centaur Toxoplasma G assay requires a two-point calibration:

- when changing lot numbers of primary reagent packs
- when replacing system components
- when quality control results are repeatedly out of range

NOTE:

- Discard reagent packs at the end of the onboard stability interval.
- Do not use reagents beyond the expiration date.

Calibration

Using Bar-code Labels

Calibrator bar-code labels are lot-number specific. Do not use bar-code labels from one lot of calibrators with any other lot of calibrators.

Use the ADVIA Centaur Toxoplasma G Calibrator bar-code labels to identify the Low and High Calibrator sample cups when performing the ADVIA Centaur Toxoplasma G assay. Place the bar-code label on the sample cup so that the readable characters on the side of the label are vertical on the sample cup.

Performing a Calibration

Each lot of calibrators contains a Calibrator Assigned Value card to facilitate entering the calibration values on the system. Enter the values using the barcode scanner or the keyboard.

Perform the calibration procedure using the following steps:

NOTE: This procedure uses calibrator volumes sufficient to measure each calibrator in duplicate.

1. Schedule the calibrators to the worklist.
2. Label two sample cups with calibrator bar-code labels: one for the low and another for the high.

491

NOTE: Each drop from the calibrator vial is approximately 50 µL.

3. Gently mix the Low and High Calibrators and dispense at least 3 to 4 drops into the appropriate sample cups.
4. Load the sample cups in a rack.
5. Place the rack in the sample entry queue.
6. Ensure that the assay reagents are loaded.
7. Start the entry queue, if required.

NOTE: Dispose of any calibrator remaining in the sample cups after 8 hours. Do not refill sample cups when the contents are depleted; if required, dispense fresh calibrators.

Quality Control

For quality control of the ADVIA Centaur Toxoplasma G assay, use ADVIA Centaur Toxoplasma G quality control material. Refer to the Expected Value card for the suggested expected values specific for the lot number of the positive and negative controls. Additional controls my be tested according to guidelines or requirements of local, state, and/or federal regulations or accrediting organizations. Choose quality control material that has a composition similar to or identical with the sample matrix under analysis. Please refer to CLSI C24-A2, *Statistical Quality Control for Quantitative Measurements: Principles and Definitions*[9], for guidance on quality control practices.

Using Bar-code Labels

Control bar-code Labels are lot-number specific. Do not use bar-code labels from one lot of controls with any other lot of controls.

Use the ADVIA Centaur Toxoplasma G quality control bar-code labels to identify the positive and negative sample cups when performing the ADVIA Centaur Toxoplasma G assay. Place the bar-code label on the sample cup so that the readable characters on the side of the label are vertical on the sample cup.

Performing Quality Control

For detailed information about entering quality control values, refer to the system operating instructions or to the online help system.

To monitor system performance and chart trends, as a minimum requirement, two levels of quality control material should be assayed on each day that samples are analyzed. Quality control samples should also be assayed when performing a two-point calibration. Treat all quality control samples the same as patient samples.

Perform the quality control procedure using the following steps:

NOTE: This procedure uses control volumes sufficient to measure each control in duplicate.

1. Schedule the quality control samples to the worklist.
2. Label two sample cups with quality control bar-code labels: one for the positive and another for the negative.

NOTE: Each drop from the control vial is approximately 50 µL.

3. Gently mix the quality control materials and dispense at least 3 to 4 drops into the appropriate sample cups.
4. Load the sample cups in a rack.
5. Place the rack in the sample entry queue.

492

6. Ensure that the assay reagents are loaded.
7. Start the entry queue, if required.

NOTE: Dispose of any quality control materials remaining in the sample cups after 8 hours. Do not refill sample cups when the contents are depleted; if required, dispense fresh quality control materials.

Taking Corrective Action

If the quality control results do not fall within the Expected Values or within the laboratory's established values, do not report results. Take the following actions:

- Verify that the materials are not expired.
- Verify that required maintenance was performed.
- Verify that the assay was performed according to the instructions for use.
- Rerun the assay with fresh quality control samples.
- If necessary, contact your local technical support provider or distributor for assistance.

Sample Volume

This assay requires 10 µL of sample for a single determination. This volume does not include the unusable volume in the sample container or the additional volume required when performing duplicates or other tests on the same sample. For detailed information about determining the minimum required volume, refer to *Sample Volume Requirements* in the *ADVIA Centaur Reference Manual.*

Assay Procedure

For detailed procedural information, refer to the system operating instructions or to the online help system.

Procedural Notes

Disposal

Dispose of hazardous or biologically contaminated materials according to the practices of your institution. Discard all materials in a safe and acceptable manner, and in compliance with all federal, state, and local requirements.

Interpretation of Results

For detailed information about how the system calculates results, refer to the system operating instructions or to the online help system.

The cutoff of the ADVIA Centaur Toxoplasma G assay was established by running a known population of 1718 samples on the ADVIA Centaur Toxoplasma G assay and adjusting the cutoff IU/mL between known positives and non-positives. The cutoff was verified based on results of the Receiver-Operator Characteristics (ROC) Curve generated from the results of the clinical studies and commercially available panels.

The system reports toxoplasma IgG antibody results in IU/mL and as reactive (positive) or nonreactive (negative). A Cutoff Value of 10.0 IU/mL is used to distinguish positive from negative samples:

- Samples with a calculated value of less than 6.4 IU/mL are considered negative.
- Samples with a calculated value between 6.4 and 9.9 IU/mL are equivocal.

493

- Samples with a calculated value greater than or equal to 10.0 IU/mL are considered positive.
- Sample results are invalid and must be repeated if the controls are out of range.

The magnitude of the measured result above the cutoff is not indicative of the total amount of antibody present in the sample. The magnitude of the reported IgG level cannot be correlated to an endpoint titer.

The detection of toxoplasma IgG in a given specimen, as determined by assays from different manufacturers, can vary due to differences in assay methods and reagent specificity.

The following table may be used when interpreting Toxoplasma G results:

Anti-*T. gondii* IgG Result	Anti-*T. gondii* IgM Result	Interpretation
Negative	Negative	It is presumed that the patient has not been infected with and is not undergoing an acute infection with *T. gondii*. If symptoms persist, submit a new specimen within 3 weeks.
Positive	Negative	From these results, it cannot be determined whether the patient is or is not undergoing a reactivated *T. gondii* infection. It appears that the patient has been previously infected with *T. gondii*. Infection may have occurred more than one year ago. If the individual has not previously tested positive for *T. gondii* antibodies, confirm the result with a reference laboratory with experience in the diagnosis of toxoplasmosis.
Equivocal	Negative	Obtain a new specimen for further testing. Patient may not be undergoing an acute infection with *T. gondii*. Determining whether the patient has been previously infected with *T. gondii* is not possible.
Negative	Equivocal	Obtain a new specimen for determination of IgM antibodies to *T. gondii*. It cannot be determined if the patient is undergoing an acute *T. gondii* infection. It appears that the patient has not been previously infected with *T. gondii*. If the new specimen result is positive or equivocal for IgM antibodies, the specimen should be sent to a reference laboratory with experience in the diagnosis of toxoplasmosis for further testing.
Positive	Equivocal	Obtain a new specimen for determination of IgM antibodies to *T. gondii*. It cannot be determined if the patient is undergoing an acute *T. gondii* infection. It appears that the patient may have been previously infected with *T. gondii*. If the new specimen result is positive or equivocal for IgM antibodies, the specimen should be sent to a reference laboratory with experience in the diagnosis of toxoplasmosis for further testing.
Equivocal	Equivocal	Obtain a new specimen for further testing. It cannot be determined if the patient is undergoing an acute infection or has been previously infected with *T. gondii*. If the new specimen result is positive or equivocal for IgM and/or IgG antibodies to *T. gondii*, the specimen should be sent to a reference laboratory with experience in the diagnosis of toxoplasmosis for further testing.
Negative	Positive	Obtain a new specimen for further testing. The patient may or may not be acutely infected with *T. gondii*. Since the IgG antibodies to *T. gondii* are negative, the specimen may have been obtained too early in the disease process for an accurate determination. Retest the new specimen with a different anti-*T. gondii* IgM assay. If the new specimen result is still positive for Toxoplasma IgM antibodies, the specimen should be sent to a reference laboratory with experience in the diagnosis of toxoplasmosis for further testing.

494

Anti-*T. gondii* IgG Result	Anti-*T. gondii* IgM Result	Interpretation
Positive	Positive	The patient may or may not be acutely infected with *T. gondii*. Obtain a new specimen for further testing. Since the IgG and IgM antibodies to *T. gondii* are positive, it appears the patient may be acutely infected with *T. gondii*. The new specimen should be repeated with a different anti-*T. gondii* IgG and IgM assay. If the new specimen is still positive for IgG and IgM antibodies to *T. gondii*, the specimen should be sent to a reference laboratory with experience in the diagnosis of toxoplasmosis for further testing.
Equivocal	Positive	It cannot be determined if the patient is acutely infected with *T. gondii*. Obtain a new specimen for further testing. Determining whether the patient has been previously infected with *T. gondii* is not possible. The specimen may have been collected too early during the disease process for an accurate determination. Retest the new specimen with a different anti-*T. gondii* IgM and IgG assay. If the new specimen result is still positive for IgM and the IgG is positive/negative/equivocal for antibodies to *T. gondii*, the specimen should be sent to a reference laboratory with experience in the diagnosis of toxoplasmosis for further testing.

Limitations

The following information pertains to limitations of the assay:

The performance of the ADVIA Centaur Toxoplasma G assay has not been established with cord blood, neonatal specimens, immunosuppressed populations, cadaver specimens, or body fluids other than serum or plasma, such as saliva, urine, amniotic, or pleural fluids. The performance characteristics of this assay are limited to detection of IgG antibodies to *T. gondii* using human serum or heparinized or EDTA plasma.

The ADVIA Centaur Toxoplasma G assay is limited to the detection of IgG antibodies to *T. gondii* in human serum or plasma.

Specimens collected in the early stages of infection may have IgG levels that are classified as negative.

Do not use heat inactivated specimens.

The use of the assay to diagnose recent infection by testing acute and convalescent samples has not been validated.

Because toxoplasma IgG may remain in serum for many months after infection, use caution in interpreting results from patients who may have received blood transfusions or infusion of other blood products within the past several months. The continued presence or absence of antibodies cannot be used to determine the success or failure of therapy.

In geographic regions that have an apparent low prevalence of toxoplasma IgG in asymptomatic populations, the positive predictive value of any assay is reduced due to the increased possibility that a positive result is actually falsely positive.[10] As with all *in vitro* diagnostic assays, each laboratory should determine its own reference range(s) for the diagnostic evaluation of patient results.[11]

Human anti-mouse antibodies (HAMA) or heterophile antibodies may be present in samples from individuals exposed to mouse or animal immunoglobulins from natural sources or as part of disease therapies. These antibodies may interfere with the ADVIA Centaur Toxoplasma G assay and give falsely positive or falsely negative results.[12] These samples should not be tested.

495

The presence of anti-nuclear antibodies (ANA) and anti-mitochondrial antibodies (AMA) in samples from patients with autoimmune syndrome may interfere with the ADVIA Centaur Toxoplasma G assay and give falsely positive or falsely negative results. These samples should not be tested.

Testing should not be performed as a screening procedure for the general population. The predictive value of a positive or negative serologic result depends on the pretest likelihood of toxoplasmosis being present. Testing should only be done when clinical evidence suggests the diagnosis of toxoplasmosis.

Following the Clinical and Laboratory Standards Institute (CLSI, formerly NCCLS) guidelines[13], toxoplasma IgG positive and negative samples were tested for interference as shown in the following table:

Serum specimens that are . . .	Demonstrate ≤ 10% change in results . . .
hemolyzed	up to 500 mg/dL of hemoglobin
lipemic	up to 1000 mg/dL of triglycerides
icteric	up to 60 mg/dL of conjugated bilirubin up to 40 mg/dL of unconjugated bilirubin
hypo/hyperproteinemia	between 3 to 12 g/dL of protein

There was no change in clinical interpretation of results.

For patient samples measuring at or around the cutoff value of 10 to 17 IU/mL, significantly elevated or increasing concentrations of total IgG may change a positive qualitative interpretation to equivocal, or rarely, may result in a negative interpretation.

Expected Values

The prevalence of IgG antibody to *T. gondii* varies considerably by geographic location and the age of the patient. The following seroprevalence rates for various populations have been reported in the literature:

Location	Seroprevalence Rate
Europe	
France, Italy	50–85%, by region
Germany	20–72%, by region
United Kingdom	20%
Japan	24%
Africa	20–65%, by country
S. America	36–82%, by country
N. America	8–38%, by region

In clinical trials, the seropositive rates for IgG antibody to *T. gondii* of serum samples obtained in the U.S. from pregnant women (N = 494) and low risk and healthy individuals (N = 1224) were 15.0% and 18.6%, respectively.

496

The distribution of ADVIA Centaur Toxoplasma G classifications observed in the clinical trials are summarized below:

Population	N	Positive
Pregnant women	494	74 (15.0%)
Random Hospital/Clinical patients	1224	228 (18.6%)
Total	1718	302 (17.6%)

As with all *in vitro* diagnostic assays, each laboratory should determine its own reference range(s) for the diagnostic evaluation of patient results.[11]

ADVIA Centaur Toxoplasma IgG: Observed Values for Various Sample Populations

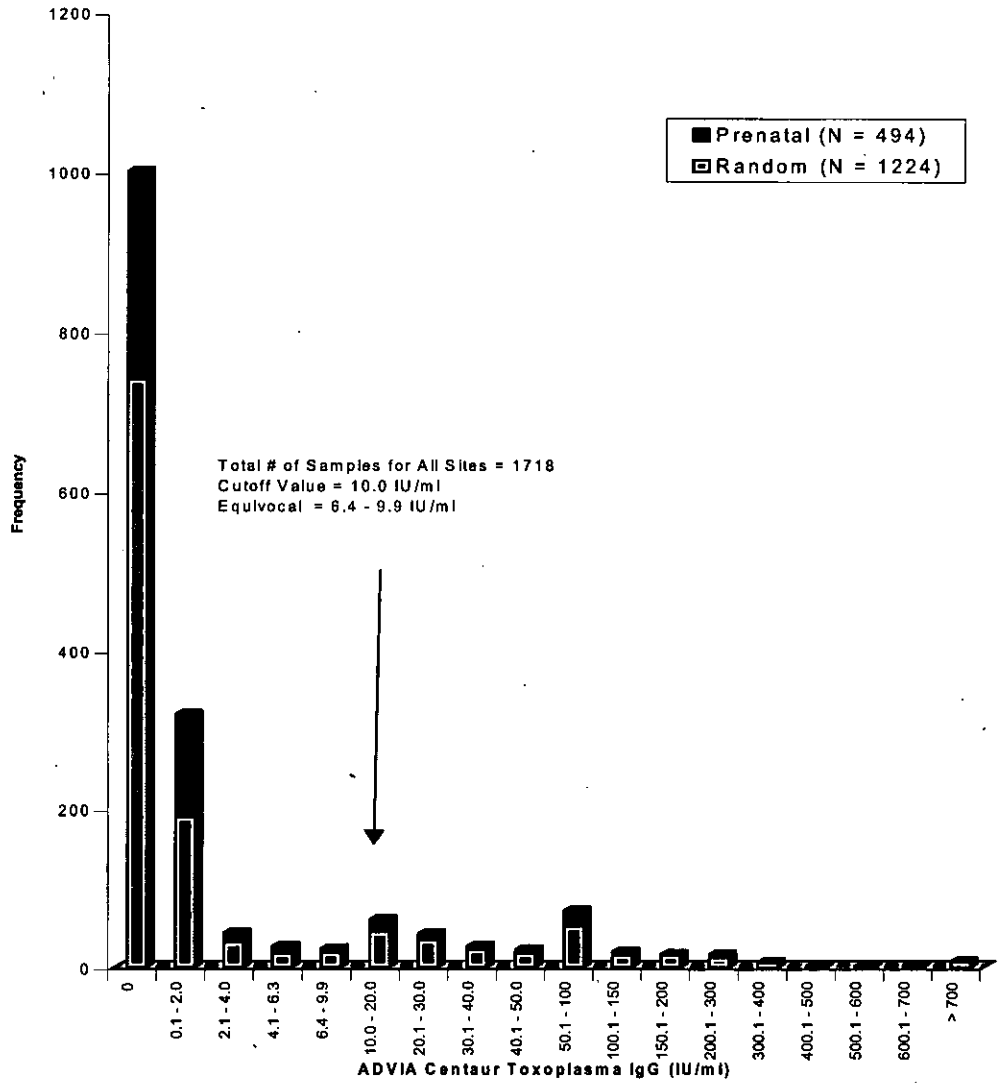

497

Performance Characteristics

Relative Sensitivity and Specificity

The performance of the ADVIA Centaur Toxoplasma G assay was determined by testing a total of 1804 samples at three U.S. sites. The ADVIA Centaur results were compared to test results generated on a commercially available, automated toxoplasma IgG EIA. Five hundred fresh samples and 1304 frozen samples from the mid-Atlantic and Midwest regions of the United States were used. The samples included the following populations: prenatal (N = 494), asymptomatic blood donors (N = 418), asymptomatic hospital patients (N = 806), and 86 patients with confirmed toxoplasma IgG positive status. Positive status was determined utilizing a commercial EIA method. Of the 1804 specimens tested, 39 were equivocal by either the ADVIA Centaur or the predicate EIA. Discordant results were found on 32 specimens which were further evaluated using other commercially available tests for toxoplasma IgG.

Relative Sensitivity

Using the alternative method, 388 tested positive for toxoplasma IgG antibody. Of the specimens that tested positive, 12 were equivocal, 363 were positive, and 13 were negative using the ADVIA Centaur Toxoplasma G assay. The relative sensitivity was 96.5%.

Relative Specificity

Using the alternative method, 1400 tested negative for toxoplasma IgG antibody. Of the specimens that tested negative, 11 were equivocal, 19 were positive, and 1370 were negative using the ADVIA Centaur Toxoplasma G assay. The relative specificity was 98.6%.

NOTE: Samples giving equivocal results were not included in the calculation of relative sensitivity, relative specificity, and relative agreement.

Relative Sensitivity, Specificity, and Agreement Before Resolution of Discordant Samples

Site	N	Relative Sensitivity (%)	Relative Specificity (%)	Relative Agreement (%)
1	804	99.5 (210/211)	98.4 (568/577)	98.7 (778/788)
2	500	94.7 (89/94)	97.7 (384/393)	97.1 (473/487)
3	500	90.1 (64/71)	99.8 (418/419)	98.4 (482/490)
Total	1804	96.5 (363/376)	98.6 (1370/1389)	96.1 (1734/1804)

NOTE: *Relative* refers to a direct comparison of ADVIA Centaur Toxoplasma G results to that of a similar assay. No attempt has been made to correlate with disease presence or absence, and no judgement can be made regarding the predicate assay's accuracy to predict toxoplasma disease.

		Predicate Toxoplasma G EIA			
		Positive	Equivocal	Negative	Total
ADVIA Centaur Toxoplasma G	Positive	363	6	19	388
	Equivocal	12	1	11	24
	Negative	13	9	1370	1392
	Total	388	16	1400	1804

Realtive Sensitivity = 96.5% (363/376), 95% CI (Confidence Interval) = 94.16–98.15
Relative Specificity = 98.6% (1370/1389), 95% CI = 97.9–99.2
Relative Agreement = 96.1% (1734/1804), 95% CI = 95.12–96.96

498

Consensus Testing

Further analysis of the 32 specimens with discordant results was performed using another commercially available test for toxoplasma IgG. Upon retest in duplicate, two ADVIA Centaur positive specimens were equivocal. Of the thirteen specimens that were negative by ADVIA Centaur and positive by EIA, three were equivocal and three were negative by consensus testing. Seven specimen interpretations remained unchanged. Of the seventeen specimens that were positive by ADVIA Centaur and negative by EIA, six were equivocal and three were positive by consensus testing. Eight specimen interpretations remained unchanged.

CDC Panel

A characterized CDC Toxoplasma 1998 Human Serum Panel was obtained from the Centers for Disease Control (CDC) and tested with the ADVIA Centaur Toxoplasma IgG assay. Testing was performed to provide additional information about the performance of the ADVIA Centaur Toxoplasma G assay with a masked characterized panel. Results were submitted to the CDC for their interpretation. This does not imply an endorsement of the assay by the CDC.

The panel consisted of 70 positive and 30 negative specimens as defined by the Dye Test. Of the 70 positives, ADVIA Centaur identified 68 as positive and 2 as equivocal. The two equivocal specimens were aliquots of the same sample. Of the 30 negatives, ADVIA Centaur identified 30 as negative. The ADVIA Centaur Toxoplasma G assay had 98% total agreement with the CDC results. Of the results obtained by the ADVIA Centaur Toxoplasma G assay, there was 97% agreement with the positive specimens and 100% agreement with the negative specimens.

Evaluation of Potentially Interfering Agents

The ADVIA Centaur Toxoplasma G assay was evaluated for potential cross reactivity/ interference with 128 viral antibodies and disease state specimens. The negative toxoplasma IgG status of the specimens was verified using alternative EIAs. The following table outlines the results obtained on the ADVIA Centaur Toxoplasma G assay.

			ADVIA Centaur Toxoplasma IgG Results		
Sample Type	**Matrix**	**Number Tested**	**Negative**	**Equivocal**	**Positive**
Anti-Mitochondrial Antibodies (AMA)	Serum	10	6	1	3
Anti-Nuclear Antibodies (ANA)	Serum	8	8	0	0
Epstein Barr Virus (EBV) IgG	Serum	5	5	0	0
Flu Vaccine	Serum	11	10	0	0
Heterophilic/HAMA	Plasma	10	10	0	0
Herpes Simplex Virus (HSV) IgG	Serum	10	10	0	0
Measles (Rubeola) IgG	Serum	14	14	0	0
Multiple Myeloma (MM) IgG	Serum	10	9	1	0
Parvovirus B19 IgG	Serum & Plasma	10	10	0	0
Rheumatoid Factor (RF)	Serum & Plasma	12	11	1	0
Syphilis	Serum	9	8	0	1
Varicella Zoster (VZV) IgG	Serum	11	10	1	0
Cytomegalovirus (CMV) IgG	Serum & Plasma	8	8	0	0

499

Precision

Reproducibility of the ADVIA Centaur Toxoplasma G assay was determined as described in CLSI protocol EP5-A2.[14] A 5-member panel was assayed two times in two separate daily runs, over a period of 20 days (n = 80). The following results were obtained using one reagent lot and a stored calibration curve:

Panel Member	N	Mean Concentration (IU/mL)	Within-run SD	Within-run %CV	Total† SD	Total† %CV
Negative Control	80	0.37	0.06	NA*	0.09	NA
Positive Control	80	27.54	0.89	3.2	0.98	3.6
1	80	1.67	0.09	5.2	0.12	7.3
2	80	8.22	0.14	1.7	0.33	4.0
3	80	20.00	0.27	1.3	0.65	3.3

* Not applicable.

† Includes within-run and run-to-run.

System reproducibility was determined by testing a 6 member panel with 3 reagent lots including 5 instruments and 3 sites over multiple days. The panel was assayed three times in each of 40 runs. The following results were obtained:

Panel Member	N	Mean Concentration (IU/mL)	Within-run SD	Within-run %CV	Total† SD	Total† %CV
Negative Control	210	0.20	0.23	NA*	0.25	NA
Positive Control	210	29.91	0.61	2.05	0.75	2.51
1	120	18.32	0.44	2.42	0.53	2.91
2	120	45.02	0.84	1.86	1.12	2.50
3	120	50.57	0.96	1.89	1.15	2.27
4	120	123.71	7.84	6.33	7.88	6.37

* Not applicable.

† Includes within-run and run-to-run.

Standardization

The ADVIA Centaur Toxoplasma G assay standardization is traceable to World Health Organization (WHO) 3rd International standard for human anti-toxoplasma serum (TOXM). A comparison over the range of 0 to 500 IU/mL using four lots of reagents gave the following correlation:

$$\text{ADVIA Centaur Toxoplasma G} = 1.02\ (\text{WHO}) + 10.7\ \text{IU/mL}$$

$$r = 0.99$$

Assigned values for calibrators and controls are traceable to this standardization.

500

Linearity

Nine specimens in serum, EDTA, and heparin, and two serum pools with anti *T. gondii* titers were independently diluted. Linear regression demonstrated linearity throughout the range of the assay. A representative sample is shown with slope, y-intercept, correlation coefficient, and 95% confidence limits.

ADVIA Centaur Toxoplasma IgG: Linearity Study
Sample F099 (Serum Redtop) diluted in Negative Serum Pool
(With 95% Confidence Limits)

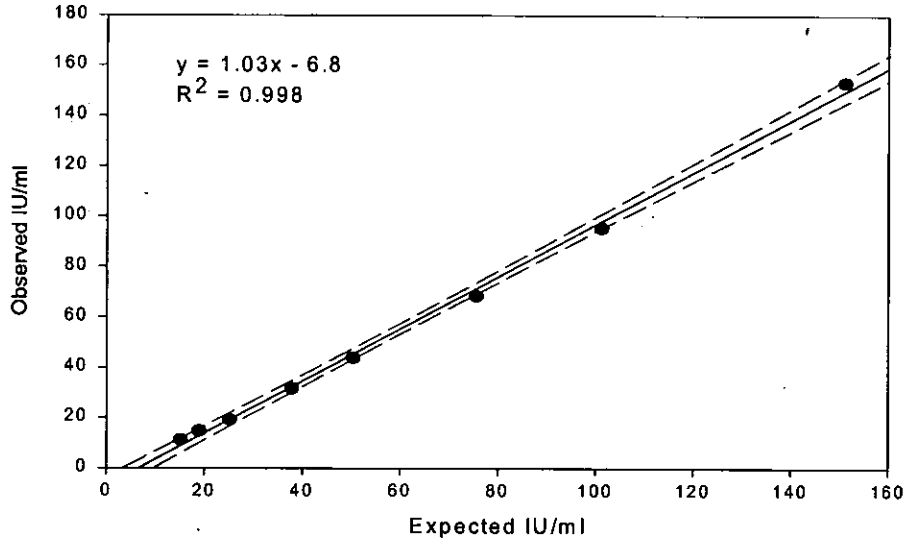

Technical Assistance

For customer support, contact your local technical support provider or distributor.

www.siemens.com/diagnostics

References

1. Litwin CM, Hill HR. Serologic and DNA-based testing for congenital and perinatal infections. *J Pediatr Infect Dis.* 1997;16:1166–75.
2. Armstrong AS, Safford JW, Holbert DN, Mushahra IK. Congenital diseases of microbiological origin. In: The Immunoassay Handbook: Applications. Edited by David Wood. New York: Stockton Press, 1994:499–501.
3. Galván RML, Alvarado VV, Gutierrez GV, et al. Prevalence of IgG and IgM anti-Toxoplasma antibodies in patients with HIV and acquired immunodeficiency syndrome (AIDS). Revista da Sociedade Brasileria de Medicina Tropical. 1997;30(6):465–7.
4. Wong, B, Gold, JW, Brown, AE et al. Central nervous system toxoplasmosis in homosexual men and parenteral drug abusers. *Ann. Int. Med.* 1984; 100:36-42.
5. Clinical and Laboratory Standards Institute (formerly NCCLS). *Procedures for the Handling and Processing of Blood Specimens; Approved Guideline - Third Edition.* Wayne, PA: Clinical and Laboratory Standards Institute; 2004. NCCLS Document H18-A3.
6. Centers for Disease Control. Update: Universal precautions for prevention of transmission of human immunodeficiency virus, hepatitis B virus and other bloodborne pathogens in healthcare settings. MMWR 1988;37:377-82, 387-8.
7. Clinical and Laboratory Standards Institute (formerly NCCLS). *Protection of Laboratory Workers From Occupationally Acquired Infections; Approved Guideline - Third Edition.* Wayne, PA: Clinical and Laboratory Standards Institute; 2005. NCCLS Document M29-A3.
8. Federal Occupational Safety and Health Administration, Bloodborne Pathogens Standard, 29 CFR 1910.1030.
9. Clinical and Laboratory Standards Institute (formerly NCCLS). *Statistical Quality Control for Quantitative Measurements: Principles and Definitions; Approved Guideline - Second Edition.* Wayne, PA: Clinical and Laboratory Standards Institute; 1999. NCCLS document C24-A2.
10. Galen RS. New Math in the Lab:Predictive Value Theory. *Diag Med.* 1979; 23–31.

501

11. Clinical and Laboratory Standards Institute (formerly NCCLS). *How to Define and Determine Reference Intervals in the Clinical Laboratory; Approved Guideline - Second Edition.* Wayne, PA: Clinical and Laboratory Standards Institute; 2000. NCCLS Document C28-A2.
12. Boscato LM, Stuart MC. Heterophilic antibodies: a problem for all immunoassays. *Clin Chem.* 1988; 34:27–33.
13. Clinical and Laboratory Standards Institute (formerly NCCLS). *Interference Testing in Clinical Chemistry; Approved Guideline - Second Edition.* Wayne, PA: Clinical and Laboratory Standards Institute; 2005. NCCLS document EP7-A2.
14. Clinical and Laboratory Standards Institute (formerly NCCLS). *Evaluation of Precision Performance of Quantitative Measurement Methods; Approved Guideline - Second Edition.* Wayne, PA: Clinical and Laboratory Standards Institute; 2004. NCCLS Document EP5-A2.

ADVIA Centaur and ReadyPack are trademarks of Siemens Healthcare Diagnostics.

© 2010 Siemens Healthcare Diagnostics. All rights reserved.

US Pats 5,609,822; 5,656,426; 5,788,928

Origin: US

Siemens Healthcare Diagnostics Inc.
Tarrytown, NY 10591-5097 USA

EC REP Siemens Healthcare Diagnostics Ltd.
Sir William Siemens Sq.
Frimley, Camberley, UK GU16 8QD

Siemens Healthcare
Diagnostics Pty Ltd
885 Mountain Highway
Bayswater Victoria 3153
Australia

シーメンスヘルスケア・
ダイアグノスティクス株式会社
東京都品川区東五反田3−20−14
Siemens Healthcare Diagnostics
輸入

502

Toxoplasma M (Toxo M)

CE 0088

Assay for the Detection of IgM Antibodies to *Toxoplasma gondii*

Assay Summary

Sample Type	***Serum, Heparinized Plasma, EDTA Plasma***
Sample Volume	***10 µL***
Calibrator	***Toxo M***
Sensitivity and Assay Range	***0.10–40.00 Index***

Contents

REF	Contents	Number of Tests
05303018 (120153)	1 ReadyPack® primary reagent pack containing ADVIA Centaur® Toxo M Lite Reagent and Solid Phase	50
	ADVIA Centaur Toxo M Master Curve card	
	1 vial Toxo M Low Calibrator [CAL L]	
	1 vial Toxo M High Calibrator [CAL H]	
	ADVIA Centaur Toxo M Calibrator Assigned Value card	

For a definition of symbols used in product labeling, refer to *Understanding the Symbols* in Appendix D.

Intended Use

The ADVIA Centaur Toxoplasma M assay is an IgM antibody capture microparticle direct chemiluminometric *in vitro* diagnostic immunoassay intended for the qualitative detection of IgM antibodies to *Toxoplasma gondii* in serum or plasma (EDTA, heparin) using the ADVIA Centaur and ADVIA Centaur XP systems.

The ADVIA Centaur Toxoplasma M assay is used to measure IgM antibody against *T. gondii* which is presumptive of an acute, recent, or reactivated toxoplasma infection. Any measurement of IgM antibody to *T. gondii* must be performed in conjunction with the determination of IgG antibody to *T. gondii*.

WARNING: The detection of toxoplasma IgM in a given specimen, as determined by assays from different manufacturers, can vary due to differences in assay methods and reagent specificity. The results reported by the laboratory to the physician must include the identity of the toxoplasma IgM assay used. Values obtained with different assay methods cannot be used interchangeably. The reported IgM level cannot be correlated to an endpoint titer.

This assay is not intended for use in screening blood, plasma, or tissue donors. The effectiveness of this assay for use in screening blood, plasma, or tissue donors has not been established.

Materials Required but Not Provided

REF	Description	Contents
03089388 (120383)	ADVIA Centaur Toxo M quality control material	2 x 1.5 mL Negative Control [CONTROL -]
		2 x 1.5 mL Positive Control [CONTROL +]
		Expected Value card
01137199 (112351)	ADVIA Centaur Wash 1 [WASH 1]	2 x 1500 mL/pack
or 03773025	ADVIA Centaur Wash 1 [WASH 1] *	2 x 2500 mL/pack

*for use with systems with 2500 mL capacity

503

Summary and Explanation of the Test

Toxoplasma gondii is an intracellular parasitic protozoan that affects birds and mammals, with cats being the primary host. Infection is typically spread by eating raw or undercooked meat containing cysts or by coming in contact with oocyst-infected cat feces. Climate, dietary customs, and presence of cats influence the prevalence of *T. gondii* which can vary considerably by geographical location and age. In healthy immunocompetent individuals, infections are usually asymptomatic or subclinical. If toxoplasmosis is diagnosed during the early stages of infection, the disease can be treated effectively with antibiotic therapy.

In pregnant women, *T. gondii* infection poses a potential threat to the fetus. The risk of a pregnant woman passing infection to the fetus is approximately 25% in the first trimester and increases to approximately 65% in the third trimester.[1] The earlier in the pregnancy that the mother is infected the greater the potential severity of congenital toxoplasmosis. If the fetus becomes infected, the infant may have symptoms such as lymphadenopathy, chorioretinitis, microcephaly and cerebral calcifications.

In immunosuppressed populations, such as cancer patients undergoing chemotherapy, transplants recipients, and AIDS patients, *T. gondii* has emerged as an important opportunistic pathogen leading to severe or fatal infections.[2,3] The immunosuppressed state of these patients is thought to allow reactivation of a latent infection,[3] and these patients may present symptoms such as headaches, confusion, fever, and focal neurological deficits.

Because isolation of the organism is difficult, toxoplasma IgM assays have been used in conjunction with clinical information in the diagnosis of *T. gondii* infection. In toxoplasma infected patients, the IgM antibody against *T. gondii* increases during acute infection but may be present for many months. A confirmed positive IgM anti-*T. gondii* test result is presumptive of a current or recent infection. In reactivated infections in immunosuppressed individuals, an IgM immunoresponse has not been demonstrated.[4] The presence of IgG antibodies against *T. gondii* indicates that the individual has had a past infection, but the level of reactivity does not indicate how recently the infection occurred.

Assay Principle

The ADVIA Centaur Toxoplasma M assay is an immunoglobulin class-capture sandwich immunoassay using direct, chemiluminometric technology. The anti-human IgM_{μ} monoclonal antibody is covalently coupled to paramagnetic particles in the Solid Phase. In the Lite Reagent, the *T. gondii* antigen is complexed with an anti-p30 monoclonal labeled with acridinium ester. Antibody-antigen complexes will form if toxoplasma IgM is present in the sample.

The system automatically performs the following actions:

- Dispenses 10 µL of sample into a cuvette.
- Dispenses 340 µL of Solid Phase and incubates the mixture for 18 minutes at 37°C.
- Separates the Solid Phase from the mixture and aspirates the unbound reagent.
- Washes the cuvette with Wash 1.
- Dispenses 200 µL Lite Reagent and incubates the mixture for 18 minutes at 37°C.
- Separates the Solid Phase from the mixture and aspirates the unbound reagent.
- Washes the cuvette with Wash 1.
- Dispenses 300 µL each of Acid Reagent and Base Reagent to initiate the chemiluminescent reaction.
- Reports results according to the selected option, as described in the system operating instructions or in the online help system.

504

A direct relationship exists between the amount of toxoplasma IgM activity present in the patient sample and the amount of relative light units (RLUs) detected by the system. A result of reactive (positive) or nonreactive (negative) is determined using an Index Value. Refer to *Interpretation of Results* for a description of the Index Value.

Specimen Collection and Handling

Serum, heparinized plasma, or EDTA plasma are the recommended sample types for this assay. A study of 8 specimens across the dynamic range of the assay and 10 specimens near the cut-off demonstrated that the index values in all matrices yielded equivalent performance.

- Do not use heat inactivated specimens.
- The performance of the ADVIA Centaur Toxoplasma M assay has not been established with cord blood, neonatal specimens, immunosuppressed specimens, cadaver specimens, or body fluids other than serum or plasma such as saliva, urine, amniotic, or pleural fluids.
- Handle all samples as if capable of transmitting disease.
- Test samples as soon as possible after collecting. Store samples at 2° to 8°C if not tested immediately.
- Store specimens at 2° to 8°C up to 7 days. Specimens may be stored on the clot.
- Freeze samples, devoid of red blood cells, at or below -20°C for longer storage. Do not store in frost-free freezer. When weakly positive samples and negative samples were subject to 3 freeze/thaw cycles, no qualitative differences were observed.
- Package and label samples for shipment in compliance with applicable federal and international regulations covering the transport of clinical samples and etiological agents. Store samples at 2° to 8°C upon arrival. If shipment is expected to exceed 7 days, ship specimens frozen.

Before placing samples on the system, ensure that samples have the following characteristics:

- Samples are free of fibrin or other particulate matter. Remove particulates by filtration or centrifugation at 1000 x g for 10 to 15 minutes.
- Samples are free of bubbles.

Reagents

Store the reagents upright at 2–8°C.
Mix all primary reagent packs by hand before loading them onto the system. Visually inspect the bottom of the reagent pack to ensure that all particles are dispersed and resuspended. For detailed information about preparing the reagents for use, refer to Appendix C, *Handling Reagents*.

Reagent Pack	Reagent	Volume	Ingredients	Storage	Stability
ADVIA Centaur Toxo M ReadyPack primary reagent pack	Lite Reagent	10.0 mL/ reagent pack	partially purified *T. gondii* antigen (~3 µg/mL) complexed with a mouse anti-*T.gondii* p30 monoclonal antibody labeled with acridinium ester in protein buffer with surfactant and preservatives	2–8°C	Until the expiration date on the pack label. For onboard stability, refer to *Onboard Stability and Calibration Interval.*
	Solid Phase	17.0 mL/ reagent pack	mouse anti-human IgMµ monoclonal antibody (~24 µg/mL) covalently coupled to paramagnetic particles in protein buffer with surfactant and preservatives	2–8°C	Until the expiration date on the pack label. For onboard stability, refer to *Onboard Stability and Calibration Interval.*

Reagent Pack	Reagent	Volume	Ingredients	Storage	Stability
Toxo M calibrator vials	Calibrators	600 µL / vial	defibrinated recalcified processed human plasma positive for toxoplasma IgM antibodies with preservatives	2–8°C	Until the expiration date on the vial or onboard–8 hours.
Toxo M quality control material vials*	Controls	1.5 mL/ vial	defibrinated processed human plasma negative and positive for toxoplasma IgM antibodies with preservatives	2–8°C	Until the expiration date on the vial or onboard–8 hours.
ADVIA Centaur WASH 1 *	Wash 1	1500 mL/ pack	phosphate buffered saline with sodium azide (< 0.1%) and surfactant	2–25°C	Until the expiration date on the vial or onboard–1 month.
ADVIA Centaur WASH 1 *	Wash 1	2500 mL/ pack	phosphate buffered saline with sodium azide (< 0.1%) and surfactant	2–25°C	Until the expiration date on the vial or onboard–1 month.

* See *Materials Required but Not Provided.*

CAUTION! POTENTIAL BIOHAZARD: Contains human source material. While each human serum or plasma donor unit used in the manufacture of this product was tested by FDA-approved methods and found nonreactive for hepatitis B surface antigen (HBsAg), antibody to hepatitis C (HCV), and antibody to HIV-1/2, all products manufactured using human source material should be handled as potentially infectious. Because no test method can offer complete assurance that hepatitis B or C viruses, HIV, or other infectious agents are absent, these products should be handled according to established good laboratory practices.[5-7]

CAUTION: This device contains material of animal origin and should be handled as a potential carrier and transmitter of disease.

NOTE: Sodium azide can react with copper and lead plumbing to form explosive metal azides. On disposal, flush reagents with a large volume of water to prevent the buildup of azides, if disposal in a drain is in compliance with federal, state, and local requirements.

For *in vitro* diagnostic use.

Loading Reagents

Ensure that the system has sufficient primary reagent packs. For detailed information about preparing the system, refer to the system operating instructions or to the online help system.

Mix all primary reagent packs by hand before loading them onto the system. Visually inspect the bottom of the reagent pack to ensure that all particles are dispersed and resuspended. For detailed information about preparing the reagents for use, refer to Appendix C, *Handling Reagents*.

Load the ReadyPack primary reagent packs in the primary reagent compartment using the arrows on the packs as a placement guide. The system automatically mixes the primary reagent packs to maintain homogeneous suspension of the reagents. For detailed information about loading reagents, refer to the system operating instructions or to the online help system.

NOTE: The Low and High Calibrators provided in this kit are matched to the ReadyPack primary reagent pack. Do not mix calibrator lots with different lots of reagent packs.

Onboard Stability and Calibration Interval

Additionally, the ADVIA Centaur Toxoplasma M assay requires a two-point calibration:

Onboard Stability	Calibration Interval
28 days	14 days

- when changing lot numbers of primary reagent packs
- when replacing system components

506

- when quality control results are repeatedly out of range

NOTE:

- Discard reagent packs at the end of the onboard stability interval.
- Do not use reagents beyond the expiration date.

Calibration

Using Barcode Labels

NOTE: Calibrator barcode labels are lot-number specific. Do not use barcode labels from one lot of calibrators with any other lot of calibrators.

Use the ADVIA Centaur Toxoplasma M Calibrator barcode labels to identify the Low and High Calibrator sample cups when performing the ADVIA Centaur Toxoplasma M assay. Place the barcode label on the sample cup so that the readable characters on the side of the label are vertical on the sample cup.

Performing a Calibration

Each lot of calibrators contains a Calibrator Assigned Value card to facilitate entering the calibration values on the system. Enter the values using the barcode scanner or the keyboard.

NOTE: This procedure uses calibrator volumes sufficient to measure each calibrator in duplicate.

1. Schedule the calibrators to the worklist.
2. Label two sample cups with calibrator barcode labels: one for the low and another for the high.

NOTE: Each drop from the calibrator vial is approximately 50 µL.

3. Gently mix the Low and High Calibrators and dispense at least 3 to 4 drops into the appropriate sample cups.
4. Load the sample cups in a rack.
5. Place the rack in the sample entry queue.
6. Ensure that the assay reagents are loaded.
7. Start the entry queue, if required.

NOTE: Dispose of any calibrator remaining in the sample cups after 8 hours. Do not refill sample cups when the contents are depleted; if required, dispense fresh calibrators.

Quality Control

For quality control of the ADVIA Centaur Toxoplasma M assay, use ADVIA Centaur Toxoplasma M quality control material. Refer to the Expected Value card for the suggested expected values specific for the lot number of the positive and negative controls. Additional controls may be tested according to the guidelines or requirements of local, state, and/or federal regulations or accrediting organizations. Please refer to NCCLS C24-A for guidance on quality control practices.

Using Barcode Labels

Control barcode labels are lot-number specific. Do not use barcode labels from one lot of controls with any other lot of controls.

507

Use the ADVIA Centaur Toxoplasma M quality control barcode labels to identify the positive and negative sample cups when performing the ADVIA Centaur Toxoplasma M assay. Place the barcode label on the sample cup so that the readable characters on the side of the label are vertical on the sample cup.

Performing Quality Control

For detailed information about entering quality control values, refer to the system operating instructions or to the online help system.

To monitor system performance and chart trends, as a minimum requirement, two levels of quality control material should be assayed on each day that samples are analyzed. Quality control samples should also be assayed when performing a two-point calibration. Treat all quality control samples the same as patient samples.

NOTE: This procedure uses control volumes sufficient to measure each control in duplicate.

1. Schedule the quality control samples to the worklist.
2. Label two sample cups with quality control barcode labels: one for the positive and another for the negative.

NOTE: Each drop from the control vial is approximately 50 µL.

3. Gently mix the quality control materials and dispense at least 3 to 4 drops into the appropriate sample cups.
4. Load the sample cups in a rack.
5. Place the rack in the sample entry queue.
6. Ensure that the assay reagents are loaded.
7. Start the entry queue, if required.

NOTE: Dispose of any quality control materials remaining in the sample cups after 8 hours. Do not refill sample cups when the contents are depleted; if required, dispense fresh quality control materials.

Taking Corrective Action

If the quality control results do not fall within the Expected Values or within the laboratory's established values, do not report results. Take the following actions:

- Verify that the materials are not expired.
- Verify that required maintenance was performed.
- Verify that the assay was performed according to the instructions for use.
- Rerun the assay with fresh quality control samples.
- If necessary, contact your local technical support provider or distributor for assistance.

Sample Volume

This assay requires 10 µL of sample for a single determination. This volume does not include the unusable volume in the sample container or the additional volume required when performing duplicates or other tests on the same sample. For detailed information about determining the minimum required volume, refer to *Sample Volume Requirements* in the *ADVIA Centaur Reference Manual.*

Assay Procedure

For detailed procedural information, refer to the system operating instructions or to the online help system.

Procedural Notes

Disposal

Dispose of hazardous or biologically contaminated materials according to the practices of your institution. Discard all materials in a safe and acceptable manner, and in compliance with all federal, state, and local requirements.

Interpretation of Results

For detailed information about how the system calculates results, refer to the system operating instructions or to the online help system.

The cutoff for the ADVIA Centaur Toxoplasma M assay was established by running a known population of 1295 samples using the ADVIA Centaur Toxoplasma M assay and adjusting the cutoff Index value between known positives and non-positives to 1.0. The cutoff for the ADVIA Centaur Toxoplasma M assay was verified based on results of Receiver-Operator characteristics (ROC) Curve generated from the results of the clinical studies and commercially available panels.

The system reports toxoplasma IgM antibody results as an Index value and as reactive (positive) or nonreactive (negative). A cutoff of 1.0 Index Value is used to distinguish positive from negative samples:

- Samples with a calculated value of less than 0.9 Index are considered negative.
- Samples with a calculated value between 0.9 and 0.99 Index are considered equivocal.
- Samples with a calculated value greater than or equal to 1.0 Index are considered positive.
- Sample results are invalid and must be repeated if the controls are out of range.

The magnitude of the measured result above the cutoff is not indicative of the total amount of antibody present in the sample.

The detection of toxoplasma IgM in a given specimen, as determined by assays from different manufacturers, can vary due to differences in assay methods and reagent specificity.

When interpreting results from the ADVIA Centaur Toxoplasma M assay, use the following table:

Anti-T. gondii IgM Result	Anti-T. gondii IgG Result	Interpretation
Negative	Negative	It is presumed the patient has not been infected with and is not undergoing an acute infection with *T. gondii*. If symptoms persist, submit a new specimen within 3 weeks.
Negative	Positive	From this testing it cannot be determined whether the patient is or is not undergoing a reactivated *T. gondii* infection. It appears the patient has been previously infected with *T. gondii*. Infection occurred more than 1 year ago.
Negative	Equivocal	Obtain a new specimen for further testing. Patient may not be undergoing an acute infection with *T. gondii*. Determining whether the patient has been previously infected with *T. gondii* is not possible.
Equivocal	Negative	Obtain a new specimen for determination of IgM antibodies to *T. gondii*. It cannot be determined if the patient is undergoing an acute *T. gondii* infection. It appears the patient has not been previously infected with *T. gondii*. If the new specimen result is positive or equivocal for IgM antibodies, the specimen should be sent to a reference laboratory with experience in the diagnosis of toxoplasmosis for further testing.

509

Anti-*T. gondii* IgM Result	Anti-*T. gondii* IgG Result	Interpretation
Equivocal	Positive	Obtain a new specimen for determination of IgM antibodies to *T. gondii*. It cannot be determined if the patient is undergoing or has undergone an acute *T. gondii* infection. It appears the patient has been previously infected with *T. gondii*. If the new specimen result is positive or equivocal for IgM antibodies, the specimen should be sent to a reference laboratory with experience in the diagnosis of toxoplasmosis for further testing.
Equivocal	Equivocal	Obtain a new specimen for further testing. It cannot be determined if the patient is undergoing an acute infection or has been previously infected with *T. gondii*. If the new specimen result is positive or equivocal for IgM antibodies, the specimen should be sent to a reference laboratory with experience in the diagnosis of toxoplasmosis for further testing.
Positive	Negative	Obtain a new specimen for further testing. The patient may or may not be acutely infected with *T. gondii*. Since the IgG antibodies to *T. gondii* are negative, the specimen may have been obtained too early in the disease process for an accurate determination. Retest the new specimen with a different anti-*T. gondii* IgM assay. If the new specimen result is still positive for IgM antibodies, the specimen should be sent to a reference laboratory with experience in the diagnosis of toxoplasmosis for further testing.
Positive	Positive	The patient may or may not be acutely infected with *T. gondii*. Obtain a new specimen for further testing. Since the IgG antibodies to *T. gondii* are positive, it appears the patient may be acutely infected with *T. gondii*. The new specimen should be repeated with a different anti-*T. gondii* IgM assay. If the new specimen result is still positive for IgM and IgG antibodies to *T. gondii*, the specimen should be sent to a reference laboratory with experience in the diagnosis of toxoplasmosis for further testing.
Positive	Equivocal	It cannot be determined if the patient is acutely infected with *T. gondii*. Obtain a new specimen for further testing. Determining whether the patient has been previously infected with *T. gondii* is not possible. The specimen may have been collected too early during the disease process for an accurate determination. Retest the new specimen with a different anti-*T. gondii* IgM assay. If the new specimen result is still positive for IgM and the IgG is positive/negative/equivocal for antibodies to *T. gondii*, the specimen should be sent to a reference laboratory with experience in the diagnosis of toxoplasmosis for further testing.

Limitations

The following information pertains to limitations of the assay:

- Testing should not be performed as a screening procedure for the general population. The predictive value of a positive or negative serologic result depends on the pretest likelihood of toxoplasmosis being present. Testing should only be done when clinical evidence suggests the diagnosis of toxoplasmosis.
- The ADVIA Centaur Toxoplasma M assay is limited to the detection of IgM antibodies to *T. gondii* in human serum or plasma.
- Do not use heat inactivated specimens.
- The performance of the ADVIA Centaur Toxoplasma M assay has not been established with cord blood, neonatal specimens, immunosuppressed specimens, cadaver specimens or body fluids other than serum or plasma, such as saliva, urine, amniotic, or pleural fluids.
- Patient specimens collected very early during the acute phase of infection may contain toxoplasma IgM levels below the cutoff of the ADVIA Centaur Toxoplasma M assay. Additionally, diagnosis of a recent infection should not be made based on a single sampling because IgM antibodies to *T. gondii* may persist in serum many months after infection.[8] The presence of IgM antibodies to *T. gondii* is not diagnostic for recent infection.
- Because toxoplasma IgM may remain in serum for many months after infection, use caution in interpreting results from patients who may have received blood transfusions or infusion of other blood products within the past several months.

510

- In geographic regions that have an apparent low prevalence of toxoplasma IgM in asymptomatic populations, the positive predictive value of any assay is reduced due to the increased possibility that a positive result is actually falsely positive.[9] As with all *in vitro* diagnostic assays, each laboratory should determine its own reference range(s) for the diagnostic evaluation of patient results.[10]
- Human anti-mouse antibodies (HAMA) or heterophile antibodies may be present in samples from individuals exposed to mouse or animal immunoglobulins from natural sources or as part of disease therapies. These antibodies may interfere with the ADVIA Centaur Toxoplasma M assay and give falsely positive or falsely negative results.[11] These samples should not be tested.

Following the NCCLS guidelines[12], toxoplasma IgM positive and negative samples were tested for interference as shown in the following table:

Serum specimens that are . . .	*Demonstrate ≤ 10% change in results . . .*
hemolyzed	up to 500 mg/dL of hemoglobin
lipemic	up to 1000 mg/dL of triglycerides
icteric	up to 40 mg/dL of conjugated bilirubin up to 20 mg/dL of unconjugated bilirubin
hypo/hyperproteinemia	between 3–12 g/dL of protein

There was no change in clinical interpretation of results.

Expected Values

The incidence of toxoplasmosis varies considerably by the geographic location and age of patient. The following have been reported in the literature:[13]

Location	*Seroprevalance Rate*
Europe	
France, Italy	50–85%, by region
Germany	20–72%, by region
United Kingdom	20%
Japan	24%
Africa	20–65%, by country
S. America	36–82%, by country
N. America	8–38%, by region

In this study, the toxoplasma IgM seropositive rate for serum samples obtained in the U.S. from asymptomatic pregnant women, hospital patients, blood donors, and HIV positive patients was determined to be 1.2%.

The distribution of ADVIA Centaur Toxoplasma M seropositive rates observed in this study are summarized in the following table:

Population	*N*	*Positive*
Pregnant women	445	7 (1.6%)
Hospital patients	465	9 (1.9%)
Blood donors	540	4 (0.7%)
HIV positive patients	100	0 (0.0%)
Total	1550	20 (1.2%)

As with all *in vitro* diagnostic assays, each laboratory should determine its own reference range(s) for the diagnostic evaluation of patient results.[10]

511

ADVIA Centaur Toxoplasma IgM: Observed Values for Various Sample Populations

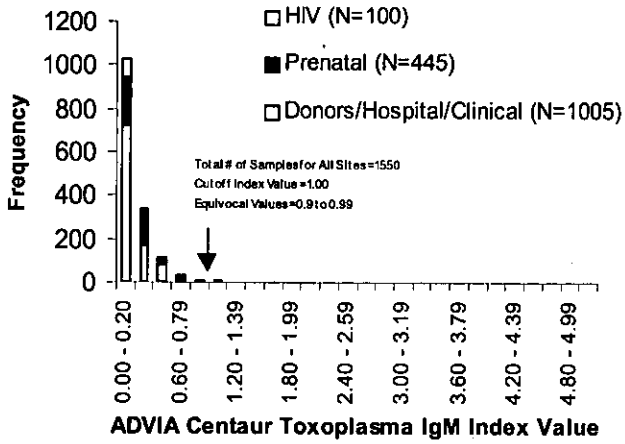

Performance Characteristics

Sensitivity and Specificity

Relative Agreement

The performance of the ADVIA Centaur Toxoplasma M assay was determined by testing a total of 1800 samples at three U.S. sites. The ADVIA Centaur Toxoplasma M results were compared to test results generated on a commercially available, automated toxoplasma IgM EIA. Clinical studies were performed at two sites in Massachusetts and one site in Virginia. Three hundred fifteen fresh and 1485 frozen serum samples were used. Samples were obtained from the mid-Atlantic and Midwest regions of the United States as well as Germany and included the following populations: prenatal (N=445), asymptomatic blood donors (N=540), asymptomatic hospital patients (N=465), and patients with confirmed toxoplasma IgM positive status. Of the 1800 specimens tested, 2 were equivocal by the ADVIA Centaur Toxoplasma M assay. Discordant results were found on 15 specimens. Further testing was done on the discordant samples using other commercially available tests for toxoplasma IgM.

Relative Sensitivity

Using the alternative method, 256 tested positive for toxoplasma IgM antibody. Of the specimens that tested positive, 0 were equivocal, 254 were positive, and 2 were negative using the ADVIA Centaur Toxoplasma M assay. The relative sensitivity was 99.2%.

Relative Specificity

Using the alternative method, 1542 tested negative for toxoplasma IgM antibody. Of the specimens that tested negative, 2 were equivocal, 13 were positive, and 1527 were negative using the ADVIA Centaur Toxoplasma M assay. The relative specificity was 99.0%.

NOTE: Samples giving equivocal results were not included in the calculation of relative sensitivity and relative specificity, but were included in calculating the relative agreement.

Relative Sensitivity, Specificity, and Agreement

Site	*N*	*Relative Sensitivity (%)*	*Relative Specificity (%)*	*Relative Agreement (%)*
1	1086	99.4 (154/155)	99.6 (926/930)	99.5 (1080/1086)
2	350	98.0 (50/51)	99.3 (294/296)	98.3 (344/350)
3	364	100.0 (50/50)	97.5 (307/314)	98.1 (357/364)
Total	1800	99.2 (254/256)	99.2 (1527/1540)	98.9 (1781/1800)

512

NOTE: *Relative* refers to a direct comparison of ADVIA Centaur Toxoplasma M results to that of a similar assay. No attempt has been made to correlate with disease presence or absence, and no judgement can be made regarding the predicate assay's accuracy to predict toxoplasma disease.

		Predicate Toxoplasma IgM			
		Positive	Equivocal	Negative	Total
ADVIA Centaur Toxoplasma M	Positive	254	1	13	268
	Equivocal	0	0	2	2
	Negative	2	1	1527	1530
	Total	256	2	1542	1800

Relative Sensitivity = 99.2% (254/256) 95% Confidence Limits 97.21–99.91
Relative Specificity = 99.2% (1527/1540) 95% Confidence Limits 98.56–99.55
Relative Agreement = 98.9% (1781/1796) 95% Confidence Limits 98.36–99.36

Consensus Testing

Further analysis of the 15 specimens with discordant results was performed using another commercially available EIA for toxoplasma IgM. Of the 13 specimens that were positive by ADVIA Centaur Toxoplasma M assay and negative by predicate EIA, 2 were positive, 1 was equivocal, and 10 were negative by consensus analysis. Of the 2 specimens that were positive by ADVIA Centaur Toxoplasma M assay and negative by predicate EIA, 1 was negative and 1 was positive by consensus analysis.

CDC Panel

A characterized toxoplasma serology panel obtained from the Centers for Disease Control (CDC) was tested. The testing was performed to provide additional information about the performance of the ADVIA Centaur Toxoplasma M assay with a masked characterized serum panel. This does not imply an endorsement of the assay by the CDC.

The panel consisted of 32 true positives, 3 serial dilutions of true positives, and 65 true negatives. The ADVIA Centaur Toxoplasma M assay correctly identified the 32 true positives, identified 2 of the 3 serial dilutions as positive, and 63 of the 65 true negatives. The ADVIA Centaur Toxoplasma M assay had 98% total agreement with the CDC results. Of the results obtained by the ADVIA Centaur Toxoplasma M assay, there was 100% agreement with the positive specimens and 97% agreement with the negative specimens.

Evaluation of Potential Interfering Agents

The ADVIA Centaur Toxoplasma M assay was evaluated for potential cross reactivity/ interference with 113 disease-state samples. Potential cross-reactive viral antibodies and disease-state specimens were tested with two lots of ADVIA Centaur Toxoplasma M reagents. The toxoplasma IgM status of the specimens was verified using alternative EIAs. The following table outlines the results obtained using the ADVIA Centaur Toxoplasma M assay and alternative method:

			Toxoplasma IgM Positive		
Sample Type	Matrix	Number Tested	ADVIA Centaur Lot 8010	ADVIA Centaur Lot 8011	Alternate EIA
Anti-mitochondria antibody (AMA)	Serum	10	0	0	0
Anti-nuclear antibody (ANA)	Serum	10	1	2	0
Human anti-mouse antibody (HAMA)	Plasma	10	0	0	0
Multiple IgM Myeloma	Serum	10	0	0	0
Rheumatoid factor (RF)	Serum	10	0	0	0
anti-Cytomegalovirus (CMV) IgM	Plasma	10	0	0	0
anti-Epstein Barr (EBV) IgM	Serum	10	0	0	0
anti-Herpes Simplex (HSV) IgM	Serum	9	0	0	0

513

Sample Type	Matrix	Number Tested	Toxoplasma IgM Positive ADVIA Centaur Lot 8010	ADVIA Centaur Lot 8011	Alternate EIA
anti-Measles (Rubeola) IgM	Serum	10	1	1	1
anti-Parvovirus B19 IgM	Serum	10	0	0	0
anti-Syphilis IgM	Serum	9	0	0	0
anti-Varicella Zoster (VZV) IgM	Serum	5	0	0	0

Matrix Evaluation

Ten samples with Index values near the cutoff were evaluated in matrices of serum, EDTA, and heparin. Samples were run in replicates of four and mean values compared with serum mean values. There were no qualitative differences observed in interpretative results.

Sample ID	Matrix	Index Value	% Recovery from Control
1	EDTA	1.3	92
	Heparin	1.2	86
	Serum	1.4	100
2	EDTA	1.7	130
	Heparin	1.8	138
	Serum	1.3	100
3	EDTA	1.9	146
	Heparin	1.8	138
	Serum	1.3	100
4	EDTA	1.6	100
	Heparin	1.7	106
	Serum	1.6	100
5	EDTA	1.6	100
	Heparin	1.5	94
	Serum	1.6	100
6	EDTA	2.1	124
	Heparin	2.3	135
	Serum	1.7	100
7	EDTA	1.8	113
	Heparin	1.9	119
	Serum	1.6	100
8	EDTA	2.8	97
	Heparin	2.8	97
	Serum	2.9	100
9	EDTA	2.4	109
	Heparin	2.3	105
	Serum	2.2	100
10	EDTA	1.6	94
	Heparin	1.6	94
	Serum	1.5	100
Mean	EDTA		111
Mean	Heparin		111

Precision

Reproducibility of the ADVIA Centaur Toxoplasma M assay was determined as described in NCCLS protocol EP5-T2.[14] An eight-member panel was assayed two times in two separate daily runs, over a period of 20 days (n = 80). The following results were obtained using one reagent lot and a stored calibration curve:

Panel Member	N	Index	Within-run SD	Within-run % CV	Total* SD	Total* % CV
Negative Control	80	0.12	0.10	8.84	0.011	9.53
Positive Control	80	2.57	0.076	2.94	0.114	4.44
1	80	0.18	0.022	12.16	0.023	12.72
2	80	0.40	0.022	5.51	0.029	7.18
3	80	0.73	0.035	4.88	0.045	6.22
4	80	1.39	0.052	3.77	0.077	5.57
5	80	4.26	0.168	3.95	0.203	4.78
6	80	8.91	0.302	3.39	0.455	5.11

* Includes within-run and run-to-run.

System reproducibility was determined by testing a 7 member panel with 2 reagent lots including 5 instruments and 3 sites over multiple days. The panel was assayed 3 times in each of 25 runs. The following results were obtained:

Panel Member	N	Index	Within-run SD	Within-run % CV	Total† SD	Total† % CV
Negative Control	165	0.11	0.02	NA*	0.02	NA
Positive Control	165	2.13	0.07	3.31	0.09	4.01
1	165	0.10	0.00	2.19	0.00	2.90
2	165	1.11	0.07	6.51	0.08	6.96
3	165	1.65	0.05	2.99	0.07	4.15
4	165	2.81	0.17	6.14	0.19	6.89
5	165	3.74	0.12	3.12	0.15	3.92
6	150	5.67	0.19	3.30	0.22	3.81
7	163	8.28	0.26	3.16	0.35	4.21

* Not applicable.

† Includes within-run and run-to-run.

The reproducibility was also calculated for each individual site with each panel member. The following results were obtained:

Toxoplasma IgM Precision Summary by Site

Sample ID	Site	N	Mean Index	Within-run SD	Within-run % CV	Total† SD	Total† % CV
Negative	1	135	0.11	0.01	*NA	0.02	NA
	2	15	0.10	0.01	NA	0.01	NA
	3	15	0.10	0.00	NA	0.00	NA
Positive	1	135	2.12	0.07	3.2	0.07	3.5
	2	15	2.15	0.07	3.1	0.11	5.1
	3	15	2.17	0.09	4.2	0.14	6.3
1	1	135	0.10	0.00	NA	0.00	NA
	2	15	0.10	0.00	NA	0.00	NA
	3	15	0.10	0.00	NA	0.00	NA
2	1	135	1.07	0.08	7.3	0.08	7.7
	2	15	1.32	0.03	2.5	0.03	2.5
	3	15	1.17	0.03	2.8	0.05	4.5

515

Sample ID	Site	N	Mean Index	Within-run SD	Within-run % CV	Total† SD	Total† % CV
3	1	135	1.62	0.05	3.1	0.06	4.0
	2	15	1.88	0.05	2.4	0.08	4.1
	3	15	1.76	0.04	2.5	0.09	5.4
4	1	135	2.77	0.18	6.5	0.20	7.3
	2	15	3.14	0.16	5.0	0.17	5.4
	3	15	2.80	0.08	2.7	0.11	3.9
5	1	135	3.65	0.11	3.1	0.15	4.0
	2	15	4.34	0.10	2.4	0.11	2.6
	3	15	3.89	0.15	3.9	0.17	4.3
6	1	135	5.58	0.16	2.9	0.20	3.6
	2	15	6.53	0.31	4.8	0.31	4.8
7	1	133	8.04	0.26	3.2	0.31	3.9
	2	15	9.88	0.27	2.7	0.28	2.9
	3	15	8.83	0.30	3.4	0.62	7.1

* Not applicable.

† Includes within-run and run-to-run.

Standardization

The ADVIA Centaur Toxoplasma M assay standardization is based upon the relative clinical agreement with commercially available Toxoplasma M assays (see Performance Characteristics). Assigned values for calibrations and controls are traceable to this standardization.

Technical Assistance

For customer support, contact your local technical support provider or distributor.

www.siemens.com/diagnostics

References

1. Litwin CM, Hill HR. Serologic and DNA-based testing for congenital and perinatal infections. *J Pediatr Infect Dis.* 1997;16:1166–75.
2. Armstrong AS, Safford JW, Holbert DN, Mushahra IK. Congenital diseases of microbiological origin. In: The Immunoassay Handbook: Applications. Edited by David Wood. New York: Stockton Press, 1994:499–501.
3. Galván RML, Alvarado VV, Gutierrez GV, et al. Prevalence of IgG and IgM anti-Toxoplasma antibodies in patients with HIV and acquired immunodeficiency syndrome (AIDS). *Revista da Sociedade Brasileria de Medicina Tropical.* 1997;30(6):465–7.
4. Levy RM, Pnes VG, Rosenblum ML. Central nervous system mass lesions in the acquired immunodeficiency syndrome (AIDS). 1984;61:9–16.
5. Centers for Disease Control. Update: Universal precautions for prevention of transmission of human immunodeficiency virus, hepatitis B virus and other bloodborne pathogens in healthcare settings. MMWR 1988;37:377–82, 387–8.
6. Clinical and Laboratory Standards Institute (formerly NCCLS). *Protection of Laboratory Workers From Occupationally Acquired Infections; Approved Guideline - Third Edition.* Wayne, PA: Clinical and Laboratory Standards Institute; 2005. NCCLS Document M29-A3.
7. Federal Occupational Safety and Health Administration, Bloodborne Pathogens Standard, 29 CFR 1910.1030.
8. Wong B, Gold JW, Brown AE et al. Central nervous system toxoplasmosis in homosexual men and parenteral drug abusers. *Ann. Int. Med.* 1984;100:36–42.
9. Galen R. New Math in the Lab:Predictive Value Theory. *Diag Med.* 1979; 23–31.
10. Clinical and Laboratory Standards Institute (formerly NCCLS). *How to Define and Determine Reference Intervals in the Clinical Laboratory; Approved Guideline - Second Edition.* Wayne, PA: Clinical and Laboratory Standards Institute; 2000. NCCLS Document C28-A2.
11. Boscato LM, Stuart MC. Heterophilic antibodies: a problem for all immunoassays. *Clin Chem.* 1988;34:27–33.

516

12. Clinical and Laboratory Standards Institute (formerly NCCLS). *Evaluation of Precision Performance of Quantitative Measurement Methods; Approved Guideline - Second Edition.* Wayne, PA: Clinical and Laboratory Standards Institute; 2004. NCCLS Document EP5-A2.
13. Bertrand, L. Seroconversion de la toxoplasmose. *Tempo Medical*, n° 422–20/03/91–13.
14. Clinical and Laboratory Standards Institute (formerly NCCLS). *Evaluation of precision performance of clinical chemistry devices–second edition; tentative guideline.* Wayne, PA: Clinical and Laboratory Standards Institute; 1992. NCCLS Document EP5-T2.

ADVIA Centaur, ReadyPack and ACS:180 are trademarks of Siemens Healthcare Diagnostics.

© 2010 Siemens Healthcare Diagnostics. All rights reserved.

US Pats 5,609,822; 5,656,426; 5,788,928

Origin: US

Siemens Healthcare Diagnostics Inc.
Tarrytown, NY 10591-5097 USA

EC REP Siemens Healthcare Diagnostics Ltd.
Sir William Siemens Sq.
Frimley, Camberley, UK GU16 8QD

Siemens Healthcare
Diagnostics Pty Ltd
885 Mountain Highway
Bayswater Victoria 3153
Australia

シーメンスヘルスケア・
ダイアグノスティクス株式会社
東京都品川区東五反田 3－20－14
Siemens Healthcare Diagnostics
輸入

517

518

TSH

CE

Assay Summary

Sample Type	**Serum**
Sample Volume	**200 µL**
Calibrator	**B**
Sensitivity and Assay Range	**0.010 – 150 µIU/mL (mIU/L)**

Contents

REF	Contents	Number of Tests
08700387 (110734)	5 ReadyPack® primary reagent packs containing ADVIA Centaur® TSH Lite Reagent and Solid Phase ADVIA Centaur TSH Master Curve card	500
or		
04911359 (110732)	1 ReadyPack primary reagent pack containing ADVIA Centaur TSH Lite Reagent and Solid Phase ADVIA Centaur TSH Master Curve card	100

For a definition of symbols used in product labeling, please refer to *Understanding the Symbols* in Appendix D.

Intended Use

For *in vitro* diagnostic use in the quantitative determination of thyroid-stimulating hormone (TSH, thyrotropin) in serum using the ADVIA Centaur and ADVIA Centaur XP systems.

Materials Required But Not Provided

REF	Description	Contents
00652707	Calibrator B	6 vials of low calibrator CAL L 6 vials of high calibrator CAL H
or		
00649625	Calibrator B	2 vials of low calibrator CAL L 2 vials of high calibrator CAL H

Optional Reagents

REF	Description	Contents
07907174 (110313)	ADVIA Centaur Multi-Diluent 1 M-DIL 1	6 ReadyPack ancillary reagent packs containing 25 mL/pack
or		
07293184 (110312)	ADVIA Centaur Multi-Diluent M-DIL 1	2 ReadyPack ancillary reagent packs containing 25 mL/pack
09348792 (672177)	Multi-Diluent M-DIL 1	50 mL/vial
672422	TSH Master Curve Material	10 x 2 mL

519

Summary and Explanation of the Test

Thyroid-stimulating hormone is a glycoprotein with two non-covalently bound subunits. The alpha subunit is similar to those of follicle-stimulating hormone (FSH), human chorionic gonadotropin (hCG), and luteinizing hormone (LH).[1-4]

The beta subunit of TSH is unique, which results in the specific biochemical and immunological properties of this hormone.

TSH is synthesized and secreted by the anterior pituitary in response to a negative feedback mechanism involving concentrations of FT_3 (free T_3) and FT_4 (free T_4). Additionally, the hypothalamic tripeptide, thyrotropin-releasing hormone (TRH), directly stimulates TSH production.

TSH interacts with specific cell receptors on the thyroid cell surface and exerts two main actions. The first action is to stimulate cell reproduction and hypertrophy. Secondly, TSH stimulates the thyroid gland to synthesize and secrete T_3 and T_4.

The ability to quantitate circulating levels of TSH is important in evaluating thyroid function. It is especially useful in the differential diagnosis of primary (thyroid) from secondary (pituitary) and tertiary (hypothalamus) hypothyroidism. In primary hypothyroidism, TSH levels are significantly elevated, while in secondary and tertiary hypothyroidism, TSH levels are low.

TRH stimulation differentiates secondary and tertiary hypothyroidism by observing the change in patient TSH levels. Typically, the TSH response to TRH stimulation is absent in cases of secondary hypothyroidism, and normal to exaggerated in tertiary hypothyroidism.

Historically, TRH stimulation has been used to confirm primary hyperthyroidism, indicated by elevated T_3 and T_4 levels and low or undetectable TSH levels. TSH assays with increased sensitivity and specificity provide a primary diagnostic tool to differentiate hyperthyroid from euthyroid patients.

Assay Principle

The ADVIA Centaur TSH assay is a two-site sandwich immunoassay using direct chemiluminometric technology, which uses constant amounts of two antibodies. The first antibody, in the Lite Reagent, is a monoclonal mouse anti-TSH antibody labeled with acridinium ester. The second antibody, in the Solid Phase, is a polyclonal sheep anti-TSH antibody which is covalently coupled to paramagnetic particles.

The system automatically performs the following steps:

- dispenses 200 µL of sample into a cuvette
- dispenses 50 µL of Lite Reagent and 225 µL of Solid Phase and incubates for 7.5 minutes at 37°C
- separates, aspirates, and washes the cuvettes with reagent water[5]
- dispenses 300 µL each of Acid Reagent and Base Reagent to initiate the chemiluminescent reaction
- reports results according to the selected option, as described in the system operating instructions or in the online help system

A direct relationship exists between the amount of TSH present in the patient sample and the amount of relative light units (RLUs) detected by the system.

Specimen Collection and Handling

Serum is the recommended sample type for this assay.

The following recommendations for handling and storing blood samples are furnished by the Clinical and Laboratory Standards Institute (CLSI, formerly NCCLS):[6]

- Collect all blood samples observing universal precautions for venipuncture.
- Allow samples to clot adequately before centrifugation.
- Keep tubes stoppered and upright at all times.
- Do not use samples that have been stored at room temperature for longer than 8 hours.
- Tightly cap and refrigerate specimens at 2 to 8°C if the assay is not completed within 8 hours.
- Freeze samples at or below -20°C if the sample is not assayed within 48 hours.
- Freeze samples only once and mix thoroughly after thawing.

Before placing samples on the system ensure that:

- Samples are free of fibrin or other particulate matter.
- Samples are free of bubbles.

Reagents

Store the reagents upright at 2–8°C.
Mix all primary reagent packs by hand before loading them onto the system. Visually inspect the bottom of the reagent pack to ensure that all particles are dispersed and resuspended. For detailed information about preparing the reagents for use, refer to Appendix C, *Handling Reagents*.

Reagent Pack	Reagent	Volume	Ingredients	Storage	Stability
ADVIA Centaur TSH ReadyPack primary reagent pack	Lite Reagent	5.0 mL/ reagent pack	monoclonal mouse anti-TSH antibody (~333 ng/mL) labeled with acridinium ester in phosphate buffered saline with sodium azide (< 0.1%) and preservatives	2–8°C	until the expiration date on the pack label. For onboard stability, refer to *Onboard Stability and Calibration Interval.*
	Solid Phase	22.5 mL/ reagent pack	polyclonal sheep anti-TSH antibody (~43 µg/mL) covalently coupled to paramagnetic particles in phosphate buffered saline with protein stabilizers, sodium azide (0.11%), and preservatives	2–8°C	until the expiration date on the pack label. For onboard stability, refer to *Onboard Stability and Calibration Interval.*
ADVIA Centaur M-DIL 1 ReadyPack ancillary reagent pack	Multi-Diluent 1	25.0 mL/ reagent pack	equine serum with sodium azide (0.1%) and preservatives	2–8°C	until the expiration date on the pack label or 28 consecutive days after accessing the ancillary reagent pack

R22 S28 **Harmful!** Harmful if swallowed. After contact with skin, wash immediately with plenty of soap and water. **Contains:** sodium azide; Solid Phase

CAUTION: This device contains material of animal origin and should be handled as a potential carrier and transmitter of disease.

521

NOTE: Sodium azide can react with copper and lead plumbing to form explosive metal azides. On disposal, flush reagents with a large volume of water to prevent the buildup of azides, if disposal into a drain is in compliance with federal, state, and local requirements.

For *In Vitro* Diagnostic Use.

Loading Reagents

Ensure that the system has sufficient primary and ancillary reagent packs. For detailed information about preparing the system, refer to the system operating instructions or to the online help system.

CAUTION: Mix all primary reagent packs by hand before loading them onto the system. Visually inspect the bottom of the reagent pack to ensure that all particles are dispersed and resuspended. For detailed information about preparing the reagents for use, refer to Appendix C, *Handling Reagents*.

Load the ReadyPack reagent packs in the primary reagent area using the arrows as a placement guide. The system automatically mixes the primary reagent packs to maintain homogeneous suspension of the reagents. For detailed information about loading reagents, refer to the system operating instructions or to the online help system.

If automatic dilution of a sample is required, load ADVIA Centaur Multi-Diluent 1 in the ancillary reagent entry.

Onboard Stability and Calibration Interval

Onboard Stability	Calibration Interval
21 days	28 days

Additionally, the ADVIA Centaur TSH assay requires a two-point calibration:

- when changing lot numbers of primary reagent packs
- when replacing system components
- when quality control results are repeatedly out of range

CAUTION:

- Discard the primary reagent packs at the end of the onboard stability interval.
- Do not use reagents beyond the expiration date.

Master Curve Calibration

The ADVIA Centaur TSH assay requires a Master Curve calibration when using a new lot number of Lite Reagent and Solid Phase. For each new lot number of Lite Reagent and Solid Phase, use the barcode reader or keyboard to enter the Master Curve values on the system. The Master Curve card contains the Master Curve values. For detailed information about entering calibration values, refer to the system operating instructions or to the online help system.

Quality Control

For detailed information about entering quality control values, refer to the system operating instructions or to the online help system.

To monitor system performance and chart trends, as a minimum requirement, two levels of quality control material should be assayed on each day that samples are analyzed. Quality control samples should also be assayed when performing a two-point calibration. Treat all quality control samples the same as patient samples.

522

Siemens Healthcare Diagnostics recommends the use of commercially available quality control materials with at least 2 levels (low and high). A satisfactory level of performance is achieved when the analyte values obtained are within the Acceptable Control Range for the system or within your range, as determined by an appropriate internal laboratory quality control scheme.

If the quality control results do not fall within the Expected Values or within the laboratory's established values, do not report results. Take the following actions:

- Verify that the materials are not expired.
- Verify that required maintenance was performed.
- Verify that the assay was performed according to the instructions for use.
- Rerun the assay with fresh quality control samples.
- If necessary, contact your local technical support provider or distributor for assistance.

Sample Volume

This assay requires 200 µL of sample for a single determination. This volume does not include the unusable volume in the sample container or the additional volume required when performing duplicates or other tests on the same sample. For detailed information about determining the minimum required volume, refer to *Sample Volume Requirements* in the *ADVIA Centaur Reference Manual.*

Assay Procedure

For detailed procedural information, refer to the system operating instructions or to the online help system.

Procedural Notes

Calculations

For detailed information about how the system calculates results, refer to the system operating instructions or to the online help system.

The system reports serum TSH results in µIU/mL (mass units) or mIU/L (SI units), depending on the units defined when setting up the assay. The conversion formula is 1 µIU/mL = 1 mIU/L.

Dilutions

- Serum samples with TSH levels greater than 150 µIU/mL (mIU/L) must be diluted and retested to obtain accurate results.
- Patient samples can be automatically diluted by the system or prepared manually.
- For automatic dilutions, ensure that ADVIA Centaur Multi-Diluent 1 is loaded and set the system parameters as follows:

  Dilution point: ≤ 150 µIU/mL (mIU/L)

  Dilution factor: 2, 5

  For detailed information about automatic dilutions, refer to the system operating instructions or to the online help system.
- Manually dilute the patient samples when patient results exceed the linearity of the assay using automatic dilution, or when laboratory protocol requires manual dilution.

523

- Use Multi-Diluent 1 to manually dilute patient samples, and then load the diluted sample in the sample rack, replacing the undiluted sample.
- Ensure that results are mathematically corrected for dilution. If a dilution factor is entered when scheduling the test, the system automatically calculates the result.

High Dose Hook Effect

Patient samples with high TSH levels can cause a paradoxical decrease in the RLUs (high dose hook effect). In this assay, patient samples with TSH levels as high as 2000 µIU/mL (mIU/L) will assay greater than 150 µIU/mL (mIU/L).

Disposal

Dispose of hazardous or biologically contaminated materials according to the practices of your institution. Discard all materials in a safe and acceptable manner, and in compliance with all federal, state, and local requirements.

Limitations

Heterophilic antibodies in human serum can react with reagent immunoglobulins, interfering with in vitro immunoassays.[7] Patients routinely exposed to animals or to animal serum products can be prone to this interference and anomalous values may be observed. Additional information may be required for diagnosis.

Serum specimens that are . . .	Have an insignificant effect on the assay up to . . .
hemolyzed	500 mg/dL of hemoglobin
lipemic	1000 mg/dL of triglycerides
icteric	40 mg/dL of bilirubin

Expected Results

The expected results for the ACS:180® TSH assay were previously established. Data was obtained on 261 patients in the following categories: euthyroid (174), hypothyroid (39), and hyperthyroid (48). Based on a cumulative distribution analysis of this data, the following reference ranges were established:

Clinical Condition	TSH Range (µIU/mL) (mIU/L)
Euthyroid	0.35–5.50
Hyperthyroid	less than 0.35
Hypothyroid	greater than 5.50

These results were confirmed for the ADVIA Centaur TSH assay by analyzing 350 samples in the range of 0.02 to 132.70 µIU/mL (mIU/L). Refer to *Method Comparison*.

As with all diagnostic assays, each laboratory should determine its own reference range(s) for the diagnostic evaluation of patient results.[8]

Performance Characteristics

Specificity

The cross-reactivity of the ADVIA Centaur TSH assay with LH, FSH, and hCG was determined by adding these hormones to human sera containing TSH. The level of TSH in the human sera was then determined.

Cross-reactant	TSH Value without cross-reactant (µIU/mL) (mIU/L)	TSH Value with cross-reactant (µIU/mL) (mIU/L)
LH; 200 mIU/mL	0.36	0.35
	5.39	5.12
	20.82	19.79
FSH; 200 mIU/mL	0.35	0.33
	5.12	4.99
	20.44	21.11
hCG; 200,000 mIU/mL	0.40	0.41
	5.43	5.23
	21.86	20.67

Interference testing was determined according to CLSI Document EP7-A2.[9]

Sensitivity and Assay Range

The ADVIA Centaur TSH assay measures TSH concentrations up to 150 µIU/mL (mIU/L) with a minimum detectable concentration (analytical sensitivity) of 0.010 µIU/mL (mIU/L). Analytical sensitivity is defined as the concentration of TSH that corresponds to the RLUs that are two standard deviations greater than the mean RLUs of 20 replicate determinations of the TSH zero standard.

Method Comparison

For 350 samples in the range of 0.02 to 132.70 µIU/mL (mIU/L), the relationship between the ADVIA Centaur TSH assay and the ACS:180 TSH assay is described by the equation:

ADVIA Centaur TSH = 0.97 (ACS:180 TSH) + 0.23 µIU/mL

Correlation coefficient (r) = 0.99

Dilution Recovery

Eight human serum samples in the range of 101.98 to 145.43 µIU/mL (mIU/L) of TSH were diluted 1:2, 1:4, 1:8, and 1:16 with Multi-Diluent 1 and assayed for recovery and parallelism. The recoveries ranged from 85.0% to 110.0% with a mean of 98.1%.

Sample	Dilution	Observed (µIU/mL) (mIU/L)	Expected (µIU/mL) (mIU/L)	Recovery %
1	—	106.54		
	1:2	49.80	53.27	93.5
	1:4	23.94	26.64	89.9
	1:8	12.99	13.32	97.5
	1:16	6.46	6.66	97.0
	Mean			94.5
2	—	108.99		
	1:2	57.93	54.50	106.3
	1:4	27.01	27.25	99.1
	1:8	14.19	13.62	104.2
	1:16	6.58	6.81	96.6
	Mean			101.5

525

Sample	Dilution	Observed (µIU/mL) (mIU/L)	Expected (µIU/mL) (mIU/L)	Recovery %
3	—	120.79		
	1:2	54.28	60.40	89.9
	1:4	25.68	30.20	85.0
	1:8	14.05	15.10	93.1
	1:16	6.66	7.55	88.2
	Mean			89.0
4	—	122.99		
	1:2	66.81	61.50	108.6
	1:4	29.94	30.75	97.4
	1:8	14.25	15.37	92.7
	1:16	7.11	7.69	92.5
	Mean			97.8
5	—	113.76		
	1:2	58.68	56.88	103.2
	1:4	27.21	28.44	95.7
	1:8	14.56	14.22	102.4
	1:16	7.55	7.11	106.2
	Mean			101.9
6	—	103.79		
	1:2	50.68	51.90	97.7
	1:4	25.40	25.95	97.9
	1:8	13.04	12.97	100.5
	1:16	6.39	6.49	98.5
	Mean			98.6
7	—	101.98		
	1:2	51.98	50.99	101.9
	1:4	27.67	25.49	108.5
	1:8	13.58	12.75	106.5
	1:16	7.01	6.37	109.9
	Mean			106.7
8	—	145.43		
	1:2	64.06	72.72	88.1
	1:4	34.21	36.36	94.1
	1:8	17.59	18.18	96.8
	1:16	9.02	9.09	99.2
	Mean			94.5
Mean				**98.1**

Spiking Recovery

Varying amounts of TSH were added to four samples with endogenous TSH levels of 0.06 to 0.76 µIU/mL (mIU/L). The recoveries ranged from 83.3% to 116.4% with a mean of 96.7%.

Sample	Amount Added (µIU/mL) (mIU/L)	Observed (µIU/mL) (mIU/L)	Recovery %
1	—	0.06	
	5.17	6.08	116.4
	10.35	10.45	100.4
	20.69	19.86	95.7
	51.74	47.10	90.9
	93.13	95.93	102.9
	155.22	129.31	83.3
	Mean		98.3

526

Sample	Amount Added (µIU/mL) (mIU/L)	Observed (µIU/mL) (mIU/L)	Recovery %
2	—	0.76	
	5.17	6.05	102.3
	10.35	10.27	91.9
	20.69	18.84	87.4
	51.74	47.64	90.6
	93.13	91.18	97.1
	155.22	132.56	84.9
	Mean		92.4
3	—	0.07	
	5.17	5.25	100.2
	10.35	10.13	97.2
	20.69	20.62	99.3
	51.74	48.93	94.4
	93.13	93.20	100.0
	155.22	138.77	89.4
	Mean		96.8
4	—	0.33	
	5.17	5.77	105.2
	10.35	11.08	103.9
	20.69	20.29	96.5
	51.74	52.75	101.3
	93.13	89.24	95.5
	155.22	146.08	93.9
	Mean		99.4
Mean			**96.7**

Precision

Three samples were assayed 6 times in each of 18 runs, on 6 systems (n = 108 for each sample), over a period of 10 days. The following results were obtained:

Mean (µIU/mL) (mIU/L)	Within-run % CV	Run-to-run % CV	Total % CV
0.74	2.48	5.31	5.87
5.65	2.44	3.44	4.22
18.98	2.41	2.05	3.17

Standardization

The ADVIA Centaur TSH assay standardization is traceable to World Health Organization (WHO) 2nd International Standard for human TSH (IRP 80/558). A comparison over the full assay range gave the following correlation:

$$\text{ADVIA Centaur TSH} = 1.02\ (\text{WHO}) + 0.09\ \mu\text{IU/mL}$$

$$r = 0.99$$

Assigned values for calibrators are traceable to this standardization.

Technical Assistance

For customer support, please contact your local technical support provider or distributor.

www.siemens.com/diagnostics

527

References

1. Chen IW, Sperling MI. Thyroxine. In: Kaplan LA, Pesce AJ, editors. Clinical chemistry: theory, analysis, and correlation. 2nd ed. St. Louis: CV Mosby, 1989. p.956–9.
2. Fernandez-Ulloa M, Maxon HR. Thyroid. In: Kaplan LA, Pesce AJ, editors. Clinical chemistry: theory, analysis, and correlation. 2nd ed. St. Louis: CV Mosby, 1989. p.620–37.
3. Watts NB, Keffer JH. Practical endocrine diagnosis. 3rd ed. Philadelphia: Lea and Febiger, 1982. p.1–27, 77–96.
4. Chattoraj SC, Watts NB. Endocrinology. In: Tietz NW, editor. Fundamentals of clinical chemistry. 3rd ed. Philadelphia: WB Saunders, 1987. p.550–1.
5. Reagent Water Technical Bulletin. Siemens Healthcare Diagnostics, 107060.
6. Clinical and Laboratory Standards Institute (formerly NCCLS). *Procedures for the Handling and Processing of Blood Specimens; Approved Guideline - Third Edition.* Wayne, PA: Clinical and Laboratory Standards Institute; 2004. NCCLS Document H18-A3.
7. Boscato LM, Stuart MC. Heterophilic antibodies: a problem for all immunoassays. Clin Chem 1988;34:27–33.
8. Clinical and Laboratory Standards Institute (formerly NCCLS). *How to Define and Determine Reference Intervals in the Clinical Laboratory; Approved Guideline - Second Edition.* Wayne, PA: Clinical and Laboratory Standards Institute; 2000. NCCLS Document C28-A2.
9. Clinical and Laboratory Standards Institute (formerly NCCLS). *Interference Testing in Clinical Chemistry; Approved Guideline - Second Edition.* Wayne, PA: Clinical and Laboratory Standards Institute; 2005. CLSI document EP7-A2.

ADVIA Centaur, ReadyPack, and ACS:180 are trademarks of Siemens Healthcare Diagnostics.

© 2008 Siemens Healthcare Diagnostics Inc. All rights reserved.

US Pats 4,918,192; 5,110,932; 5,609,822; 5,788,928

Origin: US

Siemens Healthcare Diagnostics Inc.
Tarrytown, NY 10591-5097 USA

EC REP Siemens Healthcare Diagnostics Ltd.
Sir William Siemens Sq.
Frimley, Camberley, UK GU16 8QD

Siemens Healthcare
Diagnostics Pty Ltd
885 Mountain Highway
Bayswater Victoria 3153
Australia

シーメンスヘルスケア・
ダイアグノスティクス株式会社
東京都品川区東五反田 3－20－14
Siemens Healthcare Diagnostics
輸入

TSH-3

CE

Assay Summary

Sample Type	***Serum***
Sample Volume	***200 µL***
Calibrator	***TSH-3***
Sensitivity and Assay Range	***0.004–150 µIU/mL (mIU/L)***

Contents

REF	Contents	Number of Tests
04525572 (110781)	5 ReadyPack® primary reagent packs containing ADVIA Centaur® TSH-3 Lite Reagent and Solid Phase	500
	ADVIA Centaur TSH-3 Master Curve card	
	2 vials of lyophilized TSH-3 Low Calibrator [CAL L]	
	2 vials of lyophilized TSH-3 High Calibrator [CAL H]	
	Barcode labels for the calibrators	
	TSH-3 Calibrator Assigned Value Card	
or		
06739944 (110780)	1 ReadyPack primary reagent pack containing ADVIA Centaur TSH-3 Lite Reagent and Solid Phase	100
	ADVIA Centaur TSH-3 Master Curve card	
	1 vial of lyophilized TSH-3 Low Calibrator [CAL L]	
	1 vial of lyophilized TSH-3 High Calibrator [CAL H]	
	Barcode labels for the calibrators	
	TSH-3 Calibrator Assigned Value Card	

For a definition of symbols used in product labeling, please refer to *Understanding the Symbols* in Appendix D.

Intended Use

For *in vitro* diagnostic use in the quantitative determination of thyroid-stimulating hormone (TSH, thyrotropin) in serum using the ADVIA Centaur and ADVIA Centaur XP systems.

Optional Reagents

REF	Description	Contents
07907174 (110313)	ADVIA Centaur Multi-Diluent 1 [M-DIL 1]	6 ReadyPack ancillary reagent packs containing 25 mL/pack
or		
07293184 (110312)	ADVIA Centaur Multi-Diluent 1 [M-DIL 1]	2 ReadyPack ancillary reagent packs containing 25 mL/pack
09348792 (672177)	Multi-Diluent 1 [M-DIL 1]	50 mL/vial
672422	TSH Master Curve Material	10 x 2 mL

Summary and Explanation of the Test

Thyroid-stimulating hormone is a glycoprotein with two non-covalently bound subunits. The alpha subunit is similar to those of follicle-stimulating hormone (FSH), human chorionic gonadotropin (hCG), and luteinizing hormone (LH).[1-4]

The beta subunit of TSH is unique, which results in the specific biochemical and immunological properties of this hormone.

TSH is synthesized and secreted by the anterior pituitary in response to a negative feedback mechanism involving concentrations of FT_3 (free T_3) and FT_4 (free T_4). Additionally, the hypothalamic tripeptide, thyrotropin-releasing hormone (TRH), directly stimulates TSH production.

TSH interacts with specific cell receptors on the thyroid cell surface and exerts two main actions. The first action is to stimulate cell reproduction and hypertrophy. Secondly, TSH stimulates the thyroid gland to synthesize and secrete T_3 and T_4.

The ability to quantitate circulating levels of TSH is important in evaluating thyroid function. It is especially useful in the differential diagnosis of primary (thyroid) from secondary (pituitary) and tertiary (hypothalamus) hypothyroidism. In primary hypothyroidism, TSH levels are significantly elevated, while in secondary and tertiary hypothyroidism, TSH levels are low.

TRH stimulation differentiates secondary and tertiary hypothyroidism by observing the change in patient TSH levels. Typically, the TSH response to TRH stimulation is absent in cases of secondary hypothyroidism, and normal to exaggerated in tertiary hypothyroidism.

Historically, TRH stimulation has been used to confirm primary hyperthyroidism, indicated by elevated T_3 and T_4 levels and low or undetectable TSH levels. TSH assays with increased sensitivity and specificity provide a primary diagnostic tool to differentiate hyperthyroid from euthyroid patients.

Assay Principle

The ADVIA Centaur TSH-3 assay is a two-site sandwich immunoassay using direct chemiluminometric technology, which uses constant amounts of two antibodies. The first antibody, in the Lite Reagent, is a monoclonal mouse anti-TSH antibody labeled with acridinium ester. The second antibody, in the Solid Phase, is a polyclonal sheep anti-TSH antibody, which is covalently coupled to paramagnetic particles.

The system automatically performs the following steps:

- dispenses 200 µL of sample into a cuvette
- dispenses 100 µL of Lite Reagent and incubates for 2.5 minutes at 37°C
- dispenses 225 µL of Solid Phase and incubates for 5.0 minutes at 37°C
- separates, aspirates, and washes the cuvettes with reagent water[5]
- dispenses 300 µL each of Acid Reagent and Base Reagent to initiate the chemiluminescent reaction
- reports results according to the selected option, as described in the system operating instructions or in the online help system

A direct relationship exists between the amount of TSH present in the patient sample and the amount of relative light units (RLUs) detected by the system.

530

Specimen Collection and Handling

Serum is the recommended sample type for this assay.

The following recommendations for handling and storing blood samples are furnished by the National Committee for Clinical Laboratory Standards (NCCLS):[6]

- Collect all blood samples observing universal precautions for venipuncture.
- Allow samples to clot adequately before centrifugation.
- Keep tubes stoppered and upright at all times.
- Do not use samples that have been stored at room temperature for longer than 8 hours.
- Tightly cap and refrigerate specimens at 2 to 8°C if the assay is not completed within 8 hours.
- Freeze samples at or below -20°C if the sample is not assayed within 48 hours.
- Freeze samples only once and mix thoroughly after thawing.

Before placing samples on the system ensure that:

- Samples are free of fibrin or other particulate matter.
- Samples are free of bubbles.

Reagents

Store the reagents upright at 2–8°C.
Mix all primary reagent packs by hand before loading them onto the system. Visually inspect the bottom of the reagent pack to ensure that all particles are dispersed and resuspended. For detailed information about preparing the reagents for use, refer to Appendix C, *Handling Reagents*.

Reagent Pack	Reagent	Volume	Ingredients	Storage	Stability
ADVIA Centaur TSH-3 ReadyPack primary reagent pack	Lite Reagent	10.0 mL/ reagent pack	monoclonal mouse anti-TSH antibody (~0.3 µg/mL) labeled with acridinium ester in HEPES buffered saline with protein stabilizers, sodium azide (< 0.1%), and preservatives	2–8°C	until the expiration date on the pack label. For onboard stability, refer to *Onboard Stability and Calibration Interval.*
	Solid Phase	22.5 mL/ reagent pack	polyclonal sheep anti-TSH antibody (~53 µg/mL) covalently coupled to paramagnetic particles in HEPES buffered saline with protein stabilizers, sodium azide (0.1%), and preservatives	2–8°C	until the expiration date on the pack label. For onboard stability, refer to *Onboard Stability and Calibration Interval.*
TSH-3 calibrator vials	Calibrators	2.0 mL/ vial	after reconstitution, low and high levels of thyroid-stimulating hormone (TSH) in HEPES buffered equine serum with sodium azide (< 0.1%) and preservatives	2–8°C	lyophilized–until the expiration date on the vials or reconstituted–28 days or onboard–4 hours
ADVIA Centaur M-DIL 1 ReadyPack ancillary reagent pack	Multi-Diluent 1	25.0 mL/ reagent pack	equine serum with sodium azide (0.1%) and preservatives	2–8°C	until the expiration date on the pack label or 28 consecutive days after accessing the ancillary reagent pack

531

CAUTION: Sodium azide can react with copper and lead plumbing to form explosive metal azides. On disposal, flush reagents with a large volume of water to prevent the buildup of azides, if disposal into a drain is in compliance with federal, state, and local requirements.

R22 S28 **Harmful!** Harmful if swallowed. After contact with skin, wash immediately with plenty of soap and water. **Contains:** sodium azide; Solid Phase, Calibrators

CAUTION: This device contains material of animal origin and should be handled as a potential carrier and transmitter of disease.

For *In Vitro* Diagnostic Use.

Loading Reagents

Ensure that the system has sufficient primary and ancillary reagent packs. For detailed information about preparing the system, refer to the system operating instructions or to the online help system.

CAUTION: Mix all primary reagent packs by hand before loading them onto the system. Visually inspect the bottom of the reagent pack to ensure that all particles are dispersed and resuspended. For detailed information about preparing the reagents for use, refer to Appendix C, *Handling Reagents*.

Load the ReadyPack reagent packs in the primary reagent area using the arrows as a placement guide. The system automatically mixes the primary reagent packs to maintain homogeneous suspension of the reagents. For detailed information about loading reagents, refer to the system operating instructions or to the online help system.

If automatic dilution of a sample is required, load ADVIA Centaur Multi-Diluent 1 in the ancillary reagent entry.

CAUTION: The TSH-3 Calibrators provided in this kit are matched to the Solid Phase and Lite Reagent. Do not mix TSH-3 Calibrator lots with different lots of Solid Phase and Lite Reagent.

Onboard Stability and Calibration Interval

Onboard Stability	Calibration Interval
28 days	28 days

Additionally, the ADVIA Centaur TSH-3 assay requires a two-point calibration:

- when changing lot numbers of primary reagent packs
- when replacing system components
- when quality control results are repeatedly out of range

CAUTION:

- Discard the primary reagent packs at the end of the onboard stability interval.
- Do not use reagents beyond the expiration date.

Master Curve Calibration

The ADVIA Centaur TSH-3 assay requires a Master Curve calibration when using a new lot number of Lite Reagent and Solid Phase. For each new lot number of Lite Reagent and Solid Phase, use the barcode reader or keyboard to enter the Master Curve values on the system. The Master Curve card contains the Master Curve values. For detailed information about entering calibration values, refer to the system operating instructions or to the online help system.

532

Preparing Calibrators

1. Add 2.0 mL of reagent water[5] into each calibrator vial using a volumetric or precision pipet.
2. Let the calibrators stand for 15 to 20 minutes at room temperature (20 to 30°C) to allow the lyophilized material to dissolve.
3. Gently swirl and invert the vials until homogeneous.

Using Barcode Labels

NOTE: Calibrator barcode labels are lot number specific. Do not use barcode labels from one lot of calibrators with any other lot of calibrators.

Use the TSH-3 Calibrator barcode labels to label the Low and High Calibrator sample cups when performing the TSH-3 assay. Place the barcode label on the sample cup so that the readable characters on the side of the label are vertical on the sample cup.

Quality Control

For detailed information about entering quality control values, refer to the system operating instructions or to the online help system.

To monitor system performance and chart trends, as a minimum requirement, two levels of quality control material should be assayed on each day that samples are analyzed. Quality control samples should also be assayed when performing a two-point calibration. Treat all quality control samples the same as patient samples.

Siemens Healthcare Diagnostics recommends the use of commercially available quality control materials with at least 2 levels (low and high). A satisfactory level of performance is achieved when the analyte values obtained are within the Acceptable Control Range for the system or within your range, as determined by an appropriate internal laboratory quality control scheme.

If the quality control results do not fall within the Expected Values or within the laboratory's established values, do not report results. Take the following actions:

- Verify that the materials are not expired.
- Verify that required maintenance was performed.
- Verify that the assay was performed according to the instructions for use.
- Rerun the assay with fresh quality control samples.
- If necessary, contact your local technical support provider or distributor for assistance.

Sample Volume

This assay requires 200 µL of sample for a single determination. This volume does not include the unusable volume in the sample container or the additional volume required when performing duplicates or other tests on the same sample. For detailed information about determining the minimum required volume, refer to *Sample Volume Requirements* in the *ADVIA Centaur Reference Manual.*

Assay Procedure

For detailed procedural information, refer to the system operating instructions or to the online help system.

533

Procedural Notes

Calculations

For detailed information about how the system calculates results, refer to the system operating instructions or to the online help system.

The system reports serum TSH results in µIU/mL (mass units) or mIU/L (SI units), depending on the units defined when setting up the assay. The conversion formula is 1 µIU/mL = 1 mIU/L.

Dilutions

- Serum samples with TSH levels greater than 150 µIU/mL (mIU/L) must be diluted and retested to obtain accurate results.
- Patient samples can be automatically diluted by the system or prepared manually.
- For automatic dilutions, ensure that ADVIA Centaur Multi-Diluent 1 is loaded and set the system parameters as follows:

  Dilution point: ≤ 150 µIU/mL (mIU/L)

  Dilution factor: 2, 5

  For detailed information about automatic dilutions, refer to the system operating instructions or to the online help system.
- Manually dilute the patient samples when patient results exceed the linearity of the assay using automatic dilution, or when laboratory protocol requires manual dilution.
- Use Multi-Diluent 1 to manually dilute patient samples, and then load the diluted sample in the sample rack, replacing the undiluted sample.
- Ensure that results are mathematically corrected for dilution. If a dilution factor is entered when scheduling the test, the system automatically calculates the result.

High Dose Hook Effect

Patient samples with high TSH levels can cause a paradoxical decrease in the RLUs (high dose hook effect). In this assay, patient samples with TSH levels as high as 2000 µIU/mL (mIU/L) will assay greater than 150 µIU/mL (mIU/L).

Disposal

Dispose of hazardous or biologically contaminated materials according to the practices of your institution. Discard all materials in a safe and acceptable manner, and in compliance with all federal, state, and local requirements.

Limitations

Interpret TSH levels with caution during the first trimester of pregnancy, or whenever very high levels of hCG are present.

This assay has not been validated for testing samples from newborns.

Do not pour the calibrators back into the vials after calibration because evaporation could occur, which may affect performance.

Dispose of any calibrator remaining in the sample cups after 4 hours.

Do not refill calibrator sample cups when the contents are depleted. If required, dispense fresh calibrators.

Heterophilic antibodies in human serum can react with reagent immunoglobulins, interfering with in vitro immunoassays.[7] Patients routinely exposed to animals or to animal serum products can be prone to this interference and anomalous values may be observed. Additional information may be required for diagnosis.

Serum specimens that are . . .	Demonstrate < 5% change in results up to . . .
hemolyzed	100 mg/dL of hemoglobin
lipemic	1000 mg/dL of triglycerides
icteric	40 mg/dL of bilirubin

Expected Results

The reference range for the ACS:180® TSH assay was previously established at 0.35 to 5.50 µIU/mL (mIU/L) and was validated for the ACS:180 TSH-3 assay by analyzing samples from 404 apparently healthy individuals.

Clinical Condition	TSH Range (µIU/mL) (mIU/L)
Euthyroid	0.35–5.50
Hyperthyroid	less than 0.35
Hypothyroid	greater than 5.50

These results were confirmed for the ADVIA Centaur TSH-3 assay by analyzing 400 samples in the range of 0.005 to 147.90 µIU/mL (mIU/L). Refer to *Method Comparison.*

As with all diagnostic assays, each laboratory should determine its own reference range(s) for the diagnostic evaluation of patient results.[8]

Performance Characteristics

Specificity

The cross-reactivity of the ADVIA Centaur TSH-3 assay with LH, FSH, and hCG was determined by adding these hormones to human sera containing TSH. The level of TSH in the human sera was then determined.

Cross-reactant	TSH Value without cross-reactant (µIU/mL) (mIU/L)	TSH Value with cross-reactant (µIU/mL) (mIU/L)
hCG; 200,000 mIU/mL	0.178	0.164
	1.721	1.711
	39.210	40.110
FSH; 1500 mIU/mL	0.178	0.186
	1.721	1.734
	39.210	39.390
LH; 600 mIU/mL	0.178	0.182
	1.721	1.754
	39.210	40.050

Interference testing was determined according to NCCLS Document EP7-P.[9]

Sensitivity and Assay Range

The ADVIA Centaur TSH-3 assay measures TSH concentrations up to 150 µIU/mL (mIU/L) with a minimum detectable concentration (analytical sensitivity) of 0.004 µIU/mL (mIU/L). Analytical sensitivity is defined as the concentration of TSH that corresponds to the RLUs that are two standard deviations greater than the mean RLUs of 60 replicate determinations of the TSH-3 zero standard.

535

The functional sensitivity of the ADVIA Centaur TSH3 assay is 0.019 µIU/mL (mIU/L). The mean functional sensitivity was determined using multiple patient and quality control samples in the range of 0.01 to 0.035 µIU/mL (mIU/L). All samples were assayed in duplicate in each of 8 runs, on 4 systems, over a period of 3 days. Based on this study, the ADVIA Centaur TSH-3 assay meets the definition of a third generation TSH assay.[10,11]

Method Comparison

For 400 samples in the range of 0.005 to 147.90 µIU/mL (mIU/L), the relationship between the ADVIA Centaur TSH-3 assay and the ACS:180 TSH-3 assay is described by the equation:

ADVIA Centaur TSH-3 = 0.95 (ACS:180 TSH-3) + 0.17 µIU/mL

Correlation coefficient (r) = 0.99

Dilution Recovery – Low End

Three human serum samples in the range of 0.302 to 0.516 µIU/mL (mIU/L) of TSH-3 were diluted 1:2, 1:4, 1:8, 1:16, 1:32, and 1:64 with Multi-Diluent 1 and assayed for recovery and parallelism. The recoveries ranged from 80.0% to 107.0% with a mean of 99.3%.

Sample	Dilution	Observed (µIU/mL) (mIU/L)	Expected (µIU/mL) (mIU/L)	Recovery %
1	—	0.516		
	1:2	0.253	0.258	98.0
	1:4	0.129	0.129	100.0
	1:8	0.063	0.065	98.0
	1:16	0.034	0.032	105.0
	1:32	0.016	0.016	101.0
	1:64	0.008	0.008	100.0
	Mean			100.0
2	—	0.302		
	1:2	0.146	0.151	97.0
	1:4	0.072	0.076	95.0
	1:8	0.041	0.038	107.0
	1:16	0.019	0.019	100.0
	1:32	0.009	0.009	100.0
	1:64	0.004	0.005	80.0
	Mean			97.0
3	—	0.507		
	1:2	0.251	0.254	99.0
	1:4	0.124	0.127	98.0
	1:8	0.067	0.063	106.0
	1:16	0.031	0.032	97.0
	1:32	0.016	0.016	103.0
	1:64	0.008	0.008	100.0
	Mean			101.0
Mean				**99.3**

536

Dilution Recovery

Six human serum samples in the range of 5.70 to 129.40 µIU/mL (mIU/L) of TSH-3 were diluted 1:2, 1:4, 1:8, and 1:16 with Multi-Diluent 1 and assayed for recovery and parallelism. The recoveries ranged from 97.8% to 112.2% with a mean of 104.1%.

Sample	Dilution	Observed (µIU/mL) (mIU/L)	Expected (µIU/mL) (mIU/L)	Recovery %
1	—	5.70		
	1:2	2.86	2.85	100.3
	1:4	1.51	1.42	106.0
	1:8	0.77	0.71	108.5
	1:16	0.40	0.36	112.2
	Mean			106.7
2	—	110.75		
	1:2	56.13	55.37	101.4
	1:4	27.09	27.69	97.8
	1:8	13.95	13.84	100.8
	1:16	7.05	6.92	101.8
	Mean			100.5
3	—	9.04		
	1:2	4.67	4.52	103.2
	1:4	2.39	2.26	105.6
	1:8	1.17	1.13	103.2
	1:16	0.61	0.57	108.2
	Mean			105.1
4	—	69.37		
	1:2	35.19	34.69	101.4
	1:4	17.40	17.34	100.3
	1:8	8.87	8.67	102.3
	1:16	4.61	4.34	106.4
	Mean			102.6
5	—	36.24		
	1:2	18.42	18.12	101.7
	1:4	9.17	9.06	101.3
	1:8	4.67	4.53	103.0
	1:16	2.40	2.26	105.8
	Mean			102.9
6	—	129.40		
	1:2	67.46	64.70	104.3
	1:4	34.80	32.35	107.6
	1:8	17.34	16.18	107.2
	1:16	8.81	8.09	109.0
	Mean			107.0
Mean				**104.1**

537

Spiking Recovery

Varying amounts of TSH-3 were added to five samples with endogenous TSH-3 levels of 0.999 to 2.42 µIU/mL (mIU/L). The recoveries ranged from 88.8% to 114.2% with a mean of 104.5%.

Sample	Amount Added (µIU/mL) (mIU/L)	Observed (µIU/mL) (mIU/L)	Recovery %
1	—	2.42	
	0.275	2.67	98.9
	2.76	5.44	105.0
	5.48	8.38	106.1
	29.28	34.21	107.9
	61.72	68.60	107.0
	Mean		105.0
2	—	1.50	
	0.275	1.81	101.7
	2.76	4.44	104.0
	5.48	7.28	104.3
	29.28	32.77	106.4
	61.72	67.02	106.0
	Mean		104.5
3	—	1.77	
	0.275	2.07	101.0
	2.76	4.76	105.1
	5.48	7.63	105.2
	29.28	32.77	105.5
	61.72	65.96	103.9
	Mean		104.1
4	—	0.999	
	0.275	1.31	103.2
	2.76	3.34	88.8
	5.48	6.89	106.3
	29.28	32.10	106.0
	61.72	66.60	106.2
	Mean		102.1
5	—	2.35	
	0.275	2.65	101.2
	2.76	5.34	104.5
	5.48	8.19	104.6
	29.28	36.12	114.2
	61.72	69.53	108.5
	Mean		106.6
Mean			**104.5**

538

Precision

Seven samples were assayed 6 times, in each of 12 runs, on 5 systems, (n = 71-72 for each sample). The following results were obtained:

Mean (µIU/mL) (mIU/L)	Within-run % CV	Run-to-run % CV	Total % CV
0.029	8.95	4.44	12.81
0.15	4.35	1.96	5.33
0.541	2.67	3.97	4.78
4.04	3.57	4.47	7.04
15.7	2.93	3.43	5.71
49.2	3.50	1.18	3.75
95.3	3.87	3.88	6.29

Standardization

The ADVIA Centaur TSH-3 assay standardization is traceable to World Health Organization (WHO) 2nd International Standard for human TSH (IRP 80/558). A comparison over the full assay range gave the following correlation:

$$\text{ADVIA Centaur TSH-3} = 1.03\ (\text{WHO}) + 0.06\ \mu\text{IU/mL}$$

$$r = 0.99$$

Assigned values for calibrators are traceable to this standardization.

Technical Assistance

For customer support, please contact your local technical support provider or distributor.

www.siemens.com/diagnostics

References

1. Chen IW, Sperling MI. Thyroxine. In: Kaplan LA, Pesce AJ, editors. Clinical chemistry: theory, analysis, and correlation. 2nd ed. St. Louis: CV Mosby, 1989. p.952–61.
2. Fernandez-Ulloa M, Maxon HR. Thyroid. In: Kaplan LA, Pesce AJ, editors. Clinical chemistry: theory, analysis, and correlation. 2nd ed. St. Louis: CV Mosby, 1989. p.620–37.
3. Watts NB, Keffer JH. Practical endocrine diagnosis. 3rd ed. Philadelphia: Lea and Febiger, 1982. p.1–27, 77–96.
4. Chattoraj SC, Watts NB. Endocrinology. In: Tietz NW, editor. Fundamentals of clinical chemistry. 3rd ed. Philadelphia: WB Saunders, 1987. p.550–1.
5. Reagent Water Technical Bulletin. Siemens Healthcare Diagnostics, 107060.
6. National Committee for Clinical Laboratory Standards. Procedures for the handling and processing of blood specimens; second edition; approved guideline. NCCLS Document H18-A2; Wayne (PA): NCCLS; 1999 Oct. 40p.
7. Boscato LM, Stuart MC. Heterophilic antibodies: a problem for all immunoassays. Clin Chem 1988;34:27–33.
8. National Committee for Clinical Laboratory Standards. How to define, determine, and utilize reference intervals in the clinical laboratory; approved guideline. NCCLS Document C28-A. Wayne (PA): NCCLS; 1995 June 59p.
9. National Committee for Clinical Laboratory Standards. Interference testing in clinical chemistry. Proposed Guideline. NCCLS document EP7-P. Wayne (PA):NCCLS;1986.
10. Spencer CA, LoPresti JS, Patel A, et al. J Clin Endocrin Metab 1990;70(2):453–60.
11. Spencer CA, Takeuchi M, Kazarosyan M. Current status and performance goals for serum thyrotropin (TSH) assays. Clin Chem 1996;42(1):140–5.

ADVIA Centaur, ReadyPack, and ACS:180 are trademarks of Siemens Healthcare Diagnostics.

© 2008 Siemens Healthcare Diagnostics Inc. All rights reserved.

US Pats 4,745,181; 4,918,192; 5,110,932; 5,609,822; 5,788,928

539

Origin: US

Siemens Healthcare Diagnostics Inc.
Tarrytown, NY 10591-5097 USA

EC REP Siemens Healthcare Diagnostics Ltd.
Sir William Siemens Sq.
Frimley, Camberley, UK GU16 8QD

Siemens Healthcare
Diagnostics Pty Ltd
885 Mountain Highway
Bayswater Victoria 3153
Australia

シーメンスヘルスケア・
ダイアグノスティクス株式会社
東京都品川区東五反田 3−20−14
Siemens Healthcare Diagnostics
輸入

SIEMENS

CE

ADVIA Centaur®
ADVIA Centaur® XP
Immunoassay Systems

TUp

Assay Summary

Sample Type	**Serum**
Sample Volume	**20 µL**
Calibrator	**A**

Contents

REF	Contents	Number of Tests
01025994 (110744)	5 ReadyPack® primary reagent packs containing ADVIA Centaur® TUp Lite Reagent and Solid Phase ADVIA Centaur and ADVIA Centaur CP TUp Master Curve Card	250
or		
08184524 (110743)	1 ReadyPack primary reagent pack containing ADVIA Centaur TUp Lite Reagent and Solid Phase ADVIA Centaur and ADVIA Centaur CP TUp Master Curve Card	50

Intended Use

For *in vitro* diagnostic use in the assessment of unsaturated thyroid binding proteins in serum using the ADVIA Centaur and ADVIA Centaur XP systems.

Materials Required But Not Provided

REF	Description	Contents
04800735	Calibrator A	6 vials of low calibrator CAL L 6 vials of high calibrator CAL H
or		
04800646	Calibrator A	2 vials of low calibrator CAL L 2 vials of high calibrator CAL H

Summary and Explanation of the Test

The thyroid hormones triiodothyronine (T_3) and thyroxine (T_4) are bound primarily to thyroxine-binding globulin (TBG) and to a lesser extent thyroxine-binding prealbumin (TBPA) and albumin.[1–3] The ADVIA Centaur TUp assay measures the number of unoccupied binding sites on these proteins and is an indirect indicator of thyroid status.[4]

T Uptake (TU) and total T_4 are used to estimate the amount of circulating free T_4. The estimate, or the Free Thyroxine Index (FTI), is a normalized measurement that remains relatively constant in healthy individuals and compensates for abnormal levels of binding proteins, which can occur in many different physical conditions.[1–3]

Drugs or physical conditions that alter the patient's TBG levels or drugs that compete with endogenous T_4 and T_3 for protein-binding sites alter T Uptake results. When serum contains high levels of T_3 or T_4, as in hyperthyroidism, fewer unoccupied binding sites are available. Conversely, in hypothyroidism, more binding sites are available.

Assay Principle

The ADVIA Centaur TUp assay is a double antibody competitive immunoassay using chemiluminescent technology. The sample is incubated with Lite Reagent, which is composed of acridinium ester-labeled T_3-BGG (bovine gamma globulin) and unlabeled T_3. The unlabeled T_3 in the Lite Reagent fills available thyroid-binding sites in the sample. The acridinium ester-labeled T_3-BGG does not bind to the binding proteins in the sample.

The acridinium ester-labeled T_3-BGG and unlabeled T_3 compete for monoclonal mouse anti-T_3 antibody in the Solid Phase. The monoclonal mouse anti-T_3 antibody is bound to goat anti-mouse antibody, which is covalently coupled to paramagnetic particles in the Solid Phase. A greater amount of unlabeled T_3 binding to the binding proteins in the sample results in more T_3-BGG-acridinium ester binding to the monoclonal antibody, an indication of a higher amount of unsaturated binding proteins.

The system automatically performs the following actions:

- Dispenses 20 µL of sample into a cuvette.
- Dispenses 100 µL of Lite Reagent and 450 µL of Solid Phase and incubates for 5.0 minutes at 37°C.
- Separates, aspirates, and washes the cuvettes with reagent water[5].
- Dispenses 300 µL each of Acid Reagent and Base Reagent to initiate the chemiluminescent reaction.
- Reports results according to the selected option, as described in the system operating instructions or in the online help system.

A direct relationship exists between the amount of unsaturated binding proteins present in the patient sample and the amount of relative light units (RLUs) detected by the system. This results in a higher TU ratio when there are fewer binding sites and a lower ratio when there are more binding sites.

Specimen Collection and Handling

Serum is the recommended sample type for this assay.

The following recommendations for handling and storing blood samples are furnished by the Clinical and Laboratory Standards Institute (CLSI, formerly NCCLS):[6]

- Collect all blood samples observing universal precautions for venipuncture.
- Allow samples to clot adequately before centrifugation.
- Keep tubes stoppered and upright at all times.
- Do not use samples that have been stored at room temperature for longer than 8 hours.
- Tightly cap and refrigerate specimens at 2° to 8°C if the assay is not completed within 8 hours.
- Freeze samples at or below -20°C if the sample is not assayed within 48 hours.
- Freeze samples only once and mix thoroughly after thawing.

Before placing samples on the system, ensure that samples have the following characteristics:

- Samples are free of fibrin or other particulate matter.
- Samples are free of bubbles.

Reagents

Store the reagents upright at 2–8°C.
Mix all primary reagent packs by hand before loading them onto the system. Visually inspect the bottom of the reagent pack to ensure that all particles are dispersed and resuspended. For detailed information about preparing the reagents for use, see the system operator's guide.

Reagent Pack	Reagent	Volume	Ingredients	Storage	Stability
ADVIA Centaur TUp ReadyPack primary reagent pack	Lite Reagent	5.0 mL/ reagent pack	T_3 (~40 ng/mL) and T_3-BGG (~64 ng/mL) labeled with acridinium ester in phosphate buffer with EDTA and sodium azide (0.1%)	2–8°C	until the expiration date on the pack label. For onboard stability, refer to *Onboard Stability and Calibration Interval.*
	Solid Phase	22.5 mL/ reagent pack	monoclonal mouse anti-T_3 antibody (~0.5 µg/mL) bound to goat anti-mouse antibody (~14 µg/mL) covalently coupled to paramagnetic particles in phosphate buffer with EDTA and sodium azide (0.1%)	2–8°C	until the expiration date on the pack label. For onboard stability, refer to *Onboard Stability and Calibration Interval.*

CAUTION: Sodium azide can react with copper and lead plumbing to form explosive metal azides. On disposal, flush reagents with a large volume of water to prevent the buildup of azides, if disposal into a drain is in compliance with federal, state, and local requirements.

R22 S28 **Harmful!** Harmful if swallowed. After contact with skin, wash immediately with plenty of soap and water. **Contains:** sodium azide; Lite Reagent, Solid Phase

CAUTION: This device contains material of animal origin and should be handled as a potential carrier and transmitter of disease.

Safety data sheets (MSDS/SDS) available on www.siemens.com/diagnostics.

For *in vitro* diagnostic use.

Loading Reagents

Ensure that the system has sufficient primary and ancillary reagent packs. For detailed information about preparing the system, refer to the system operating instructions or to the online help system.

CAUTION: Mix all primary reagent packs by hand before loading them onto the system. Visually inspect the bottom of the reagent pack to ensure that all particles are dispersed and resuspended. For detailed information about preparing the reagents for use, see the system operator's guide.

Load the ReadyPack reagent packs in the primary reagent area using the arrows as a placement guide. The system automatically mixes the primary reagent packs to maintain homogeneous suspension of the reagents. For detailed information about loading reagents, refer to the system operating instructions or to the online help system.

543

Onboard Stability and Calibration Interval

Onboard Stability	Calibration Interval
4 days	28 days

Additionally, the ADVIA Centaur TUp assay requires a reference serum (reference factor) calibration:

- when changing lot numbers of primary reagent packs
- when replacing system components
- when quality control results are repeatedly out of range

Use the Low Calibrator from Calibrator A to calibrate the ADVIA Centaur TUp assay.

CAUTION:

- Discard the primary reagent packs at the end of the onboard stability interval.
- Do not use reagents beyond the expiration date.

Defining a Ratio Test for the Free Thyroxine Index (FTI)

For more information about entering the ratio test definition for the FTI, refer to the system operating instructions or to the online help system.

1. Enter the ratio test name, for example, FTI.
2. Enter the ratio test definition, for example, T_4 concentration x % Uptake/100 using the following variables:

   a = Tests, T4

   b = Variable, 0

   c = Variable, 100

   d = Tests, TUp (%)
3. Save the changes.

Master Curve Calibration

The ADVIA Centaur TUp assay requires a Master Curve calibration when using a new lot number of Lite Reagent and Solid Phase. For each new lot number of Lite Reagent and Solid Phase, use the barcode reader or keyboard to enter the Master Curve values on the system. The Master Curve card contains the Master Curve values. For detailed information about entering calibration values, refer to the system operating instructions or to the online help system.

Quality Control

Follow government regulations or accreditation requirements for quality control frequency.

For detailed information about entering quality control values, refer to the system operating instructions or to the online help system.

To monitor system performance and chart trends, as a minimum requirement, two levels of quality control material should be assayed on each day that samples are analyzed. Quality control samples should also be assayed when performing a two-point calibration. Treat all quality control samples the same as patient samples.

Siemens Healthcare Diagnostics recommends the use of commercially available quality control materials with at least 2 levels (low and high). A satisfactory level of performance is achieved when the analyte values obtained are within the Acceptable Control Range for the system or within your range, as determined by an appropriate internal laboratory quality control scheme.

If the quality control results do not fall within the Expected Values or within the laboratory's established values, do not report results. Take the following actions:

- Verify that the materials are not expired.
- Verify that required maintenance was performed.
- Verify that the assay was performed according to the instructions for use.
- Rerun the assay with fresh quality control samples.
- If necessary, contact your local technical support provider or distributor for assistance.

Sample Volume

This assay requires 20 µL of sample for a single determination. This volume does not include the unusable volume in the sample container or the additional volume required when performing duplicates or other tests on the same sample. For detailed information about determining the minimum required volume, refer to *Sample Volume Requirements* in the *ADVIA Centaur Reference Manual.*

Assay Procedure

For detailed procedural information, refer to the system operating instructions or to the online help system.

Procedural Notes

Calculations

For detailed information about how the system calculates results, refer to the system operating instructions or to the online help system.

To obtain results as a percent uptake rather than a ratio, choose the percent uptake option on the system. The system multiplies the uptake ratio by the midpoint of the percent uptake normal range to calculate results. For example, if the preferred normal range is 25 to 35%, the uptake ratio is multiplied by 30. For an approximate normal range of 35 to 45%, the uptake ratio is multiplied by 40.

The system calculates the Free Thyroxine Index (FTI) from the ADVIA Centaur T4 and the ADVIA Centaur TUp assay results on the same sample if the FTI is scheduled by the user. The system calculates the FTI according to the following equation:

$$FTI = \frac{T_4 \text{ concentration} \times \% \text{ Uptake}}{100}$$

Disposal

Dispose of hazardous or biologically contaminated materials according to the practices of your institution. Discard all materials in a safe and acceptable manner, and in compliance with all federal, state, and local requirements.

545

Limitations

T Uptake values are a function of thyroid hormone binding capacity of serum. Some conditions may result in abnormal T Uptake values even when no thyroid malfunction is present. The conditions listed below may alter T Uptake values.[2]

Conditions that Decrease T Uptake Values

- pregnancy (especially in the last trimester)
- elevated estrogen levels
- acute hepatitis
- anovulatory drugs

Conditions that Increase T Uptake Values

- protein malnutrition
- chronic liver disease
- nephrotic syndrome
- phenytoin therapy
- heparin therapy
- uremia
- large doses of salicylates
- antibiotics[7]

Thyroid preparations that maintain normal T_3 and T_4 concentrations can elevate T Uptake values when the dose of the hormone is excessive and can decrease T Uptake values when the dose is inadequate. Replacement therapy with triiodothyronine results in decreased T Uptake values.

Heterophilic antibodies in human serum can react with reagent immunoglobulins, interfering with *in vitro* immunoassays.[8] Patients routinely exposed to animals or to animal serum products can be prone to this interference and anomalous values may be observed. Additional information may be required for diagnosis.

Serum specimens that are . . .	Have an insignificant effect on the assay up to . . .
hemolyzed	1200 mg/dL of hemoglobin
lipemic	2000 mg/dL of triglycerides
icteric	30 mg/dL of bilirubin

546

Expected Results

The expected results for the ACS:180® TUp assay were previously established. Data was obtained on serum samples from 100 apparently healthy individuals. Total T4 values were generated on these samples using the ACS:180 T4 test method. Based on a 95% confidence interval for euthyroid samples, the following reference range was established:

Clinical Condition	TU Ratio	% TU	FTI
Euthyroid	0.75–1.23	22.5–37.0	1.4–3.1

These results were confirmed for the ADVIA Centaur TUp assay by analyzing 119 samples with T Uptake ratios in the range of 0.37 to 1.74 (11.1 to 52.2% Uptake) and total T_4 values in the range of 0.93 to 22.3 µg/dL (12 to 288 nmol/L). Refer to *Method Comparison*.

As with all diagnostic assays, each laboratory should determine its own reference range(s) for the diagnostic evaluation of patient results.[9]

Performance Characteristics

Specificity

The specificity of the T_3 antiserum used in the ADVIA Centaur TUp assay has been determined in the ACS:180 T3 assay.

Compound	% Cross-reactivity
L-thyroxine	< 0.1
3,3',5-triiodothyroacetic acid	~25
3,5-diiodothyronine	< 0.1
3,3',5'-triiodothyronine (reverse T_3)	0.6 (by weight)
Thyroid hormone analogues	
3-iodo-L-tyrosine	< 0.05 (by weight)
3,5-diiodo-L-tyrosine	< 0.05 (by weight)

Interference testing was determined according to NCCLS Document EP7-P.[10]

Method Comparison

For 119 samples with T Uptake ratios in the range of 0.37 to 1.74 (11.1 to 52.2% Uptake) and total T4 values in the range of 0.93 to 22.3 µg/dL (12 to 288 nmol/L), the correlation between the ADVIA Centaur TUp assay and the ACS:180 TUp assay is 0.95.

The correlation of FTI values (n = 119) is described by the following equation:

ADVIA Centaur TUp FTI = 1.02 (ACS:180 TUp FTI) + 0.00

FTI Correlation coefficient (r) = 0.99

Precision

Three samples were assayed 3 or 4 times, in each of 20 runs, on 9 systems, (n = 72 for each sample), over a period of 11 days. The following results were obtained:

Mean TU (ratio)	Within-run % CV	Run-to-run % CV	Total % CV
1.03	2.58	1.42	2.95
1.30	1.93	1.77	2.62
1.76	2.41	2.25	3.30

547

Traceability of Standardization

The ADVIA Centaur TUp assay is traceable to an internal standardization. There is no reference standard at the current time. Assigned values for calibrators are traceable to this standardization.

Technical Assistance

For customer support, contact your local technical support provider or distributor.

www.siemens.com/diagnostics

References

1. Chen IW, Sperling MI. Thyroxine. In: Kaplan LA, Pesce AJ, editors. Clinical chemistry: theory, analysis, and correlation. 2nd ed. St. Louis: CV Mosby, 1989. p.956–9.
2. Fernandez-Ulloa M, Maxon HR. Thyroid. In: Kaplan LA, Pesce AJ, editors. Clinical chemistry: theory, analysis, and correlation. 2nd ed. St. Louis: CV Mosby, 1989. p.620–38.
3. Watts NB, Keffer JH. Practical endocrine diagnosis. 3rd ed. Philadelphia: Lea and Febiger, 1982. p.1–27, 77–96.
4. Chattoraj SC, Watts NB. Endocrinology. In: Tietz NW, editor. Fundamentals of clinical chemistry. 3rd ed. Philadelphia: WB Saunders, 1987. p.592.
5. Reagent Water Technical Bulletin. Siemens Healthcare Diagnostics, 107060.
6. Clinical and Laboratory Standards Institute (formerly NCCLS). *Procedures for the Handling and Processing of Blood Specimens; Approved Guideline - Third Edition.* Wayne, PA: Clinical and Laboratory Standards Institute; 2004. NCCLS Document H18-A3.
7. Boscato LM, Stuart MC. Heterophilic antibodies: a problem for all immunoassays. *Clin Chem* 1988;34:27–33.
8. Young DS, Pestaner LC, Gibberman. V. Effects of drugs on clinical laboratory tests. *Clin Chem* 1973;21:367D.
9. Clinical and Laboratory Standards Institute (formerly NCCLS). *How to Define and Determine Reference Intervals in the Clinical Laboratory; Approved Guideline - Second Edition.* Wayne, PA: Clinical and Laboratory Standards Institute; 2000. NCCLS Document C28-A2.
10. Clinical and Laboratory Standards Institute (formerly NCCLS). *Interference Testing in Clinical Chemistry; Approved Guideline - Second Edition.* Wayne, PA: Clinical and Laboratory Standards Institute; 2005. CLSI document EP7-A2.

ADVIA Centaur, ReadyPack, and ACS:180 are trademarks of Siemens Healthcare Diagnostics.

© 2011 Siemens Healthcare Diagnostics. All rights reserved.

US Pats 5,110,932; 5,609,822; 5,788,928

Origin: US

Siemens Healthcare Diagnostics Inc.
Tarrytown, NY 10591-5097 USA

EC REP Siemens Healthcare Diagnostics Ltd.
Sir William Siemens Sq.
Frimley, Camberley, UK GU16 8QD

Siemens Healthcare
Diagnostics Pty Ltd
885 Mountain Highway
Bayswater Victoria 3153
Australia

548

Understanding the Symbols

The following symbols may appear on the product labeling:

Symbol	Definition	Symbol	Definition
IVD	*In vitro* diagnostic medical device	REF	Catalog number
	Manufacturer	EC REP	Authorized Representative in the European Community
CE	CE Mark	CE 0088	CE Mark with identification number of notified body
	Consult instructions for use		Caution! Potential Biohazard
0°C	Do not freeze (> 0°C)	2°C 8°C	Temperature limitation (2–8°C)
2°C	Lower limit of temperature (≥ 2°C)	-10°C	Upper limit of temperature (≤ -10°C)
	Keep away from sunlight		Use by
UP	Store upright		Shake the reagent pack vigorously. Refer to *Loading Reagents* in the assay-specific ADVIA Centaur product instructions for detailed information.
LOT	Batch code	Σ XX	Contains sufficient for (n) tests
2010-01	Date format (year-month)	PRINTED WITH SOY INK	Printed with soy ink
	Green dot		Recycle

549

550

Valproic Acid (VALP)

CE

Assay Summary

Sample Type	***Serum, Heparinized Plasma, EDTA plasma***
Sample Volume	***25 µL***
Calibrator	***28***
Sensitivity and Assay Range	***1 – 150 µg/mL (6.93 – 1039.5 µmol/L)***

Contents

REF	Contents	Number of Tests
05258292	5 ReadyPack® primary reagent packs containing ADVIA Centaur® VALP Lite Reagent and Solid Phase ADVIA Centaur VALP Master Curve card	250
or		
05256877	1 ReadyPack primary reagent pack containing ADVIA Centaur VALP Lite Reagent and Solid Phase ADVIA Centaur VALP Master Curve card	50

For a definition of symbols used in product labeling, please refer to *Understanding the Symbols* in Appendix D.

Intended Use

For *in vitro* diagnostic use in the quantitative determination of valproic acid in serum or plasma using the ADVIA Centaur and ADVIA Centaur XP systems.

Materials Required But Not Provided

REF	Description	Contents
05260521	Calibrator 28	6 vials of low calibrator CAL L 6 vials of high calibrator CAL H
or		
05259132	Calibrator 28	2 vials of low calibrator CAL L 2 vials of high calibrator CAL H

Optional Reagents

REF	Description	Contents
04311114 (110317)	ADVIA Centaur Multi-Diluent 5 M-DIL 5	2 ReadyPack ancillary reagent packs containing 5 mL/pack
08839946 (570055)	Multi-Diluent 5 M-DIL 5	20 mL/vial
05261307	VALP Master Curve Material	7 x 1 mL

551

Summary and Explanation of the Test[1-3]

Valproic acid (2-propylpentanoic acid) is an anticonvulsant drug that is used alone or in combination with other anticonvulsant drugs for control of seizures. If serum or plasma levels of the drug are too low, seizure control is not maintained, and if serum or plasma levels are too high, the risk of toxicity increases.

The half-life of the drug is difficult to predict in a given individual. Because both the metabolism and the clearance of the drug are variable among individuals, close monitoring of serum or plasma valproic acid levels is appropriate for individuals undergoing valproic acid therapy.

Assay Principle

The ADVIA Centaur Valproic Acid assay is a competitive immunoassay using direct chemiluminescent technology. Valproic acid in the patient sample competes with acridinium ester-labeled valproic acid in the Lite Reagent for a limited amount of monoclonal mouse ant-valproic acid antibody, which is covalently coupled to paramagnetic particles in the Solid Phase.

The system automatically performs the following steps:

- dispenses 25 µL of sample into a cuvette
- dispenses 100 µL of Lite Reagent and incubates for 2.5 minutes at 37°C
- dispenses 300 µL of Solid Phase and incubates for 5.0 minutes at 37°C
- separates, aspirates, and washes the cuvettes with reagent water[4]
- dispenses 300 µL each of Acid Reagent and Base Reagent to initiate the chemiluminescent reaction
- reports results according to the selected option, as described in the system operating instructions or in the online help system

An inverse relationship exists between the amount of valproic acid present in the patient sample and the amount of relative light units (RLUs) detected by the system.

Specimen Collection and Handling

NOTE: Available literature references present conflicting and complex recommendations on the use of gel barrier tubes for therapeutic drug monitoring samples. Each lab should contact their specific tube manufacturer for additional information and recommendations for therapeutic drug monitoring testing with the ADVIA Centaur systems.

Serum, heparinized plasma, or EDTA plasma are the recommended sample types for this assay. Average measured valproic acid concentrations of samples, [n=10, range: (79.6 to 94.1 µg/mL) (551.6 to 652.1 µmol/L)] collected in heparin collection tubes, were -0.8% (range: -10.5 to 9.9%) of measured concentrations in control (red top) serum collection tubes. Samples, [n=10; range: (80.9 to 94.1 µg/mL) (560.6 to 652.1 µmol/L)] collected in EDTA collection tubes had measured valproic acid concentrations of -2.2% (range: -8.5 to 5.3%) compared to control red top serum collection tubes.

The following recommendations for handling and storing blood samples are furnished by the Clinical and Laboratory Standards Institute (CLSI, formerly NCCLS):[5]

- Collect all blood samples observing universal precautions for venipuncture.
- Allow samples to clot adequately before centrifugation.
- Keep tubes stoppered and upright at all times.
- Do not use samples that have been stored at room temperature for longer than 8 hours.
- Tightly cap and refrigerate specimens at 2 to 8°C if the assay is not completed within 8 hours.
- Freeze samples at or below -20°C if the sample is not assayed within 48 hours.
- Freeze samples only once and mix thoroughly after thawing.
- Frozen specimens can remain frozen up to 1 month in non-frost free freezers.

Before placing samples on the system ensure that:

- Samples are free of fibrin or other particulate matter.
- Samples are free of bubbles.

Reagents

Store the reagents upright at 2–8°C.
Mix all primary reagent packs by hand before loading them onto the system. Visually inspect the bottom of the reagent pack to ensure that all particles are dispersed and resuspended. For detailed information about preparing the reagents for use, refer to Appendix C, *Handling Reagents*.

Protect from sunlight
Protect reagent packs from all light sources. Reagent packs loaded on the system are protected from light. Store unused reagent packs at 2–8°C away from light sources.

Reagent Pack	Reagent	Volume	Ingredients	Storage	Stability
ADVIA Centaur VALP ReadyPack primary reagent pack	Lite Reagent	5.0 mL/ reagent pack	valproic acid (~0.2 ng/mL) labeled with acridinium ester in phosphate buffered saline with bovine serum albumin, bovine gamma globulin, and preservatives	2–8°C	until the expiration date on the pack label. For onboard stability, refer to *Onboard Stability and Calibration Interval.*
	Solid Phase	15.0 mL/ reagent pack	monoclonal mouse anti-valproic acid antibody (~6.7 µg/mL) coupled to paramagnetic particles in phosphate buffered saline with bovine serum albumin, bovine gamma globulin, and preservatives	2–8°C	until the expiration date on the pack label. For onboard stability, refer to *Onboard Stability and Calibration Interval.*
ADVIA Centaur M-DIL 5 ReadyPack ancillary reagent pack	Multi-Diluent 5	5.0 mL/ reagent pack	human plasma with sodium azide (< 0.1%)	2–8°C	until the expiration date on the pack label or 28 consecutive days after accessing the ancillary reagent pack

NOTE: Sodium azide can react with copper and lead plumbing to form explosive metal azides. On disposal, flush reagents with a large volume of water to prevent the buildup of azides, if disposal into a drain is in compliance with federal, state, and local requirements.

CAUTION! POTENTIAL BIOHAZARD: Contains human source material. While each human serum or plasma donor unit used in the manufacture of this product was tested by FDA-approved methods and found nonreactive for hepatitis B surface antigen (HBsAg), antibody to hepatitis C (HCV), and antibody to HIV-1/2, all products manufactured using human source material should be handled as potentially infectious. Because no test method can offer complete assurance that hepatitis B or C viruses, HIV, or other infectious agents are absent, these products should be handled according to established good laboratory practices.[6-8]

CAUTION: This device contains material of animal origin and should be handled as a potential carrier and transmitter of disease.

For *In Vitro* Diagnostic Use.

Loading Reagents

Ensure that the system has sufficient primary and ancillary reagent packs. For detailed information about preparing the system, refer to the system operating instructions or to the online help system.

Mix all primary reagent packs by hand before loading them onto the system. Visually inspect the bottom of the reagent pack to ensure that all particles are dispersed and resuspended. For detailed information about preparing the reagents for use, refer to Appendix C, *Handling Reagents*.

Load the ReadyPack reagent packs in the primary reagent area using the arrows as a placement guide. The system automatically mixes the primary reagent packs to maintain homogeneous suspension of the reagents. For detailed information about loading reagents, refer to the system operating instructions or to the online help system.

If automatic dilution of a sample is required, load ADVIA Centaur Multi-Diluent 5 in the ancillary reagent entry.

Onboard Stability and Calibration Interval

Onboard Stability	Calibration Interval
14 days	14 days

Additionally, the ADVIA Centaur Valproic Acid assay requires a two-point calibration:

- when changing lot numbers of primary reagent packs
- when replacing system components
- when quality control results are repeatedly out of range

NOTE:

- Discard the primary reagent packs at the end of the onboard stability interval.
- Do not use reagents beyond the expiration date.

Master Curve Calibration

The ADVIA Centaur Valproic Acid assay requires a Master Curve calibration when using a new lot number of Lite Reagent and Solid Phase. For each new lot number of Lite Reagent and Solid Phase, use the barcode reader or keyboard to enter the Master Curve values on the system. The Master Curve card contains the Master Curve values. For detailed information about entering calibration values, refer to the system operating instructions or to the online help system.

Quality Control

For detailed information about entering quality control values, refer to the system operating instructions or to the online help system.

To monitor system performance and chart trends, as a minimum requirement, two levels of quality control material should be assayed on each day that samples are analyzed. Quality control samples should also be assayed when performing a two-point calibration. Treat all quality control samples the same as patient samples.

Siemens Healthcare Diagnostics recommends the use of commercially available quality control materials with at least 2 levels (low and high). A satisfactory level of performance is achieved when the analyte values obtained are within the Acceptable Control Range for the system or within your range, as determined by an appropriate internal laboratory quality control scheme.

If the quality control results do not fall within the Expected Values or within the laboratory's established values, do not report results. Take the following actions:

- Verify that the materials are not expired.
- Verify that required maintenance was performed.
- Verify that the assay was performed according to the instructions for use.
- Rerun the assay with fresh quality control samples.
- If necessary, contact your local technical support provider or distributor for assistance.

Sample Volume

This assay requires 25 µL of sample for a single determination. This volume does not include the unusable volume in the sample container or the additional volume required when performing duplicates or other tests on the same sample. For detailed information about determining the minimum required volume, refer to *Sample Volume Requirements* in the *ADVIA Centaur Reference Manual.*

NOTE: The sample volume required to perform onboard dilution differs from the sample volume required to perform a single determination. Refer to the following information for the sample volume required to perform onboard dilutions:

Dilution	Sample Volume (µL)
1:2	100

Assay Procedure

For detailed procedural information, refer to the system operating instructions or to the online help system.

Procedural Notes

Calculations

For detailed information about how the system calculates results, refer to the system operating instructions or to the online help system.

The system reports valproic acid results in µg/mL (common units) or µmol/L (SI units), depending on the units defined when setting up the assay. The conversion formula is 1 µg/mL = 6.93 µmol/L.

Dilutions

- Dilute and retest samples with valproic acid levels greater than 150 µg/mL (1039.5 µmol/L) to obtain accurate results.
- Patient samples can be automatically diluted by the system or prepared manually.
- For automatic dilutions, ensure that ADVIA Centaur Multi-Diluent 5 is loaded and set the system parameters as follows:

  Dilution point: ≤ 150 µg/mL (1039.5 µmol/L)

  Dilution factor: 2

  For detailed information about automatic dilutions, refer to the system operating instructions or to the online help system.
- Manually dilute the patient samples when patient results exceed the linearity of the assay using automatic dilution, or when laboratory protocol requires manual dilution.
- Use Multi-Diluent 5 to manually dilute patient samples, and then load the diluted sample in the sample rack, replacing the undiluted sample.
- Ensure that results are mathematically corrected for dilution. If a dilution factor is entered when scheduling the test, the system automatically calculates the result.

Disposal

Dispose of hazardous or biologically contaminated materials according to the practices of your institution. Discard all materials in a safe and acceptable manner, and in compliance with all federal, state, and local requirements.

Limitations

This assay has not been validated for newborn testing.

Heterophilic antibodies in human serum can react with reagent immunoglobulins, interfering with *in vitro* immunoassays.[9] Patients routinely exposed to animals or to animal serum products can be prone to this interference and anomalous values may be observed. Additional information may be required for diagnosis.

Serum specimens that are . . .	Demonstrate < 5% and/or statistically insignificant ($p \geq 0.05$, t-test) change in results up to . . .
hemolyzed	500 mg/dL of hemoglobin
lipemic	3000 mg/dL of triglycerides
icteric	5 mg/dL of bilirubin
proteinemic	2 g/dL of protein

Expected Results

A therapeutic range of 50 to 100 µg/mL (347 to 693 µmol/L) has been previously reported for valproic acid.[1-3]

As with all therapeutic drug assays, each laboratory should determine the appropriateness of this range for the diagnostic evaluation of patient results.[10]

Performance Characteristics

Specificity

Pooled serum samples with valproic acid levels of 55.8 to 69.0 µg/mL (386.7 to 478.2 µmol/L) were spiked with the compounds listed below to concentrations as shown. ADVIA Centaur Valproic Acid assay results from the spiked samples were compared with those of unspiked control samples. These compounds did not have a significant effect on the ADVIA Centaur Valproic Acid measurement ($p \geq 0.05$, t-test).

Compound	Amount Added (µg/mL)
Carbamazepine	1000
Clonazepam	100
Diazepam	100
Ethosuximide	1000
Phenobarbital	750
Phenytoin	1000
Primidone	1000
Aspirin	1000

Interference testing was determined according to CLSI Document EP7-A2.[11]

Sensitivity and Assay Range

The ADVIA Centaur Valproic Acid assay measures valproic acid concentrations up to 150 µg/mL (1039.5 µmol/L) with a minimum detectable concentration of 1 µg/mL (6.93 µmol/L). Analytical sensitivity is defined as the concentration of valproic acid that corresponds to the RLUs that are two standard deviations less than the mean RLUs of 10 replicate determinations of the Valproic Acid zero standard.

Method Comparison

For 284 samples (from adult patients) in the range of 5.2 to 132.2 µg/mL (36.0 to 916.1 µmol/L), the relationship between the ADVIA Centaur Valproic Acid assay and an alternate fluorescence polarization immunoassay is described by the equation:

ADVIA Centaur Valproic Acid = 1.06 (alternate FPIA method) + 1.37 µg/mL

Correlation coefficient (r) = 0.98

Dilution Recovery

Six human serum samples in the range of 50.5 to 108.1 µg/mL (350.0 to 749.0 µmol/L) of valproic acid were diluted 1:2, 1:4, 1:8, and 1:16 with Multi-Diluent 5 and assayed for recovery and parallelism. The recoveries ranged 89.7 to 118.1% with a mean of 102.1%.

Sample	Dilution	Observed (µg/mL)	Expected (µg/mL)	Observed (µmol/L)	Expected (µmol/L)	Recovery %
1	—	89.0		616.7		
	1:2	42.1	44.5	291.6	308.4	94.6
	1:4	21.4	22.3	148.0	154.5	95.8
	1:8	11.1	11.1	76.6	76.9	99.6
	1:16	6.4	5.6	44.4	38.5	115.1
	Mean					101.3
2	—	82.4		570.7		
	1:2	40.3	41.2	279.3	285.3	97.9
	1:4	20.9	20.6	144.6	142.7	101.4
	1:8	11.6	10.3	80.1	71.3	112.3
	1:16	6.1	5.2	42.1	35.7	118.1
	Mean					107.4
3	—	75.3		521.7		
	1:2	37.7	37.6	260.9	260.8	100.0
	1:4	18.9	18.8	131.3	130.4	100.6
	1:8	10.0	9.4	69.4	65.2	106.5
	1:16	5.5	4.7	37.9	32.6	116.4
	Mean					105.9
4	—	108.1		749.0		
	1:2	52.1	54.0	360.7	374.5	96.3
	1:4	26.1	27.0	180.8	187.2	96.6
	1:8	12.8	13.5	88.7	93.6	94.7
	1:16	7.2	6.8	49.6	46.8	105.9
	Mean					98.4
5	—	88.0		609.8		
	1:2	40.1	44.0	277.6	304.9	91.0
	1:4	19.7	22.0	136.8	152.5	89.7
	1:8	10.2	11.0	70.3	76.2	92.3
	1:16	5.5	5.5	38.3	38.1	100.5
	Mean					93.4
6	—	50.5		350.0		
	1:2	24.5	25.3	169.5	175.1	96.8
	1:4	13.2	12.6	91.3	87.5	104.3
	1:8	7.0	6.3	48.4	43.7	110.8
	1:16	3.6	3.2	24.7	21.9	112.7
	Mean					106.1
Mean						**102.1**

558

Spiking Recovery

Varying amounts of valproic acid were added to five valproic acid-free normal serum samples. The recoveries ranged from 91.5 to 120.2% with a mean of 105.4%.

Sample	Amount Added (µg/mL)	Observed (µg/mL)	Amount Added (µmol/L)	Observed (µmol/L)	Recovery %
1	—	0.0	—	0.0	
	27.9	30.0	193.3	208.1	107.6
	42.9	45.5	297.1	315.4	106.2
	62.8	69.2	425.2	479.4	110.1
	90.8	91.7	629.4	635.6	101.0
	114.5	119.2	793.8	826.3	104.1
	Mean				105.8
2	—	0.0	—	0.0	
	27.9	27.2	193.3	188.8	97.6
	42.9	45.3	297.1	313.6	105.6
	62.8	64.0	425.2	443.6	101.9
	90.8	90.1	629.4	624.5	99.2
	114.5	112.2	793.8	777.7	98.0
	Mean				100.5
3	—	0.0	—	0.0	
	27.9	30.3	193.3	209.8	108.5
	42.9	44.6	297.1	309.0	104.0
	62.8	73.0	425.2	505.6	116.2
	90.8	97.6	629.4	676.1	107.4
	114.5	104.8	793.8	726.3	91.5
	Mean				105.5
4	—	0.0	—	0.0	
	27.9	31.5	193.3	218.6	113.0
	42.9	46.2	297.1	320.3	107.8
	62.8	75.5	425.2	523.3	120.2
	90.8	94.3	629.4	653.4	103.8
	114.5	111.8	793.8	774.6	97.6
	Mean				108.5
5	—	0.0	—	0.0	
	27.9	31.9	193.3	221.4	114.5
	42.9	45.2	297.1	312.9	105.3
	62.8	69.4	425.2	480.8	110.5
	90.8	87.9	629.4	609.1	96.8
	114.5	120.6	793.8	835.9	105.3
	Mean				106.5
Mean					**105.4**

Precision

Five samples were assayed 4 times in 9 assays, on each of 2 systems (n = 72 for each sample), over a period of 10 days. The following results were obtained:

Mean (µg/mL)	Mean (µmol/L)	Within-run % CV	Run-to-run % CV	Total % CV
22.8	158.0	5.2	4.4	6.9
46.3	320.8	5.0	2.0	5.8
64.6	447.7	3.7	4.3	6.1
94.6	655.6	4.2	3.4	5.7
102.7	711.7	5.4	3.4	6.4

Traceability of Standardization

The ADVIA Centaur Valproic acid assay is traceable to an internal standard manufactured using highly purified material. Standard reference materials (SRM 1599) from NIST (National Institute of Standards and Technology) were evaluated and found to recover on average 97% of target concentration. Assigned values for calibrators are traceable to this standardization.

Technical Assistance

For customer support, please contact your local technical support provider or distributor.

www.siemens.com/diagnostics

References

1. Taylor WJ and Finn AL (eds). Individualizing Drug Therapy: Practical Applications of Drug Monitoring, Townsend, and Frank, Inc., New York, NY, Vol 2, pp 87-108 (1981).
2. Gupta RN, Eng F, and Gupta ML. Gas-chromatographic analysis for valproic acid as phenacyl esters. Clin Chem 1979,25:1303-1305.
3. Oellerich M. Enzyme immunoassays in clinical chemistry: Present status and trrends. J Clin Chem Clin Biochem 1980,18:197-208.
4. Reagent Water Technical Bulletin. Siemens Healthcare Diagnostics, 107060.
5. Clinical and Laboratory Standards Institute (formerly NCCLS). Procedures for the handling and processing of blood specimens; approved guideline - third edition. Wayne, PA: Clinical and Laboratory Standards Institute; 2004. NCCLS Document H18-A3.
6. Clinical and Laboratory Standards Institute (formerly NCCLS). Protection of laboratory workers from occupationally acquired infections; approved guideline - third edition. Wayne, PA: Clinical and Laboratory Standards Institute; 2005. NCCLS Document M29-A3.
7. Centers for Disease Control. 1988. Update:Universal precautions for prevention of transmission of human immunodeficiency virus, hepatitis B virus and other bloodborne pathogens in healthcare settings. MMWR 37:377-82, 387-8.
8. Federal Occupational Safety and Health Administration. Bloodborne Pathogens Standard. 29 CFR 1910.1030.
9. Boscato LM, Stuart MC. Heterophilic antibodies: a problem for all immunoassays. Clin Chem 1988;34:27–33.
10. Clinical and Laboratory Standards Institute (formerly NCCLS). How to define and determine reference intervals in the clinical laboratory; approved guideline - second edition. Wayne, PA: Clinical and Laboratory Standards Institute; 2000. NCCLS Document C28-A2.
11. Clinical and Laboratory Standards Institute (formerly NCCLS). Interference testing in clinical chemistry; approved guideline - second edition. Wayne, PA: Clinical and Laboratory Standards Institute; 2005. NCCLS Document EP7-A2.

ADVIA Centaur and ReadyPack are trademarks of Siemens Healthcare Diagnostics.

© 2008 Siemens Healthcare Diagnostics Inc. All rights reserved.

US Pats 5,656,426; 5,609,822; 5,788,928

Origin: US

Siemens Healthcare Diagnostics Inc.
Tarrytown, NY 10591-5097 USA

EC REP Siemens Healthcare Diagnostics Ltd.
Sir William Siemens Sq.
Frimley, Camberley, UK GU16 8QD

Siemens Healthcare
Diagnostics Pty Ltd
885 Mountain Highway
Bayswater Victoria 3153
Australia

シーメンスヘルスケア・
ダイアグノスティクス株式会社
東京都品川区東五反田 3－20－14
Siemens Healthcare Diagnostics
輸入

Vancomycin (VANC)

CE

Assay Summary

Sample Type	***Serum, Heparinized Plasma, EDTA plasma***
Sample Volume	***40 µL***
Calibrator	***VANC***
Sensitivity and Assay Range	***0.67 – 90 µg/mL (0.46 – 62 µmol/L)***

Contents

REF	Contents	Number of Tests
05808748 (121197)	5 ReadyPack® primary reagent packs containing ADVIA Centaur® VANC Lite Reagent and Solid Phase ADVIA Centaur VANC Master Curve card	250
or		
05300450 (118451)	1 ReadyPack primary reagent pack containing ADVIA Centaur VANC Lite Reagent and Solid Phase ADVIA Centaur VANC Master Curve card	50

For a definition of symbols used in product labeling, please refer to *Understanding the Symbols* in Appendix D.

Intended Use

For *in vitro* diagnostic use in the quantitative determination of vancomycin in serum or plasma using the ADVIA Centaur and ADVIA Centaur XP systems.

Materials Required But Not Provided

REF	Description	Contents
09763528 (570062)	VANC Calibrator	6 vials of low calibrator CAL L 6 vials of high calibrator CAL H
or		
02526032 (570061)	VANC Calibrator	2 vials of low calibrator CAL L 2 vials of high calibrator CAL H

Optional Reagents

REF	Description	Contents
08805642 (110318)	ADVIA Centaur Multi-Diluent 7 M-DIL 7	2 ReadyPack ancillary reagent packs containing 5 mL/pack
05631465 (570099)	Multi-Diluent 7 M-DIL 7	20 mL/vial
672362	VANC Master Curve Material	6 x 1 mL

Summary and Explanation of the Test

Vancomycin is a glycopeptide antibiotic that acts by inhibiting protein synthesis in bacteria. It is used to treat gram positive bacteria, such as *Staphylococcus aureus*, and some facultative anaerobic gram negative bacteria.[1,2]

563

The therapeutic range for vancomycin is 30 to 40 µg/mL (20.7 to 27.6 µmol/L) at the peak concentration and 5 to 10 µg/mL (3.45 to 6.9 µmol/L) at the trough level.[3] Toxicity may occur when serum vancomycin levels exceed 80 µg/mL (55.2 µmol/L).[1,4] At levels above 80 µg/mL (55.2 µmol/L), vancomycin is potentially nephrotoxic and ototoxic.[1,2,4,5]

The normal half-life of vancomycin is approximately 6 hours, but clearance of the drug is dependent on renal function. It is important to monitor the level of serum vancomycin and adjust the dosage on an individual basis in patients with impaired renal function.[2] Because of its ototoxicity, it is also important to monitor the vancomycin levels in patients receiving other ototoxic antibiotics.[1]

Assay Principle

The ADVIA Centaur Vancomycin assay is a competitive immunoassay using direct chemiluminescent technology. Vancomycin in the patient sample competes with vancomycin coupled to BSA labeled with acridinium ester in the Lite Reagent for a limited amount of monoclonal mouse anti-vancomycin antibody, which is covalently coupled to paramagnetic particles in the Solid Phase.

The system automatically performs the following steps:

- dispenses 40 µL of sample into a cuvette
- dispenses 400 µL of Solid Phase and incubates for 2.5 minutes at 37°C
- Dispenses 100 µL of Lite Reagent and incubates for 5 minutes
- separates, aspirates, and washes the cuvettes with reagent water[6]
- dispenses 300 µL each of Acid Reagent and Base Reagent to initiate the chemiluminescent reaction
- reports results according to the selected option, as described in the system operating instructions or in the online help system

An inverse relationship exists between the amount of vancomycin present in the patient sample and the amount of relative light units (RLUs) detected by the system.

Specimen Collection and Handling

NOTE: Available literature references present conflicting and complex recommendations on the use of gel barrier tubes for therapeutic drug monitoring samples. Each lab should contact their specific tube manufacturer for additional information and recommendations for therapeutic drug monitoring testing with the ADVIA Centaur systems.

Serum, heparinized plasma or EDTA plasma is the recommended sample type for this assay. It is not recommended that heparin plasma, EDTA plasma and serum samples from the same patient be used interchangeably with this test. Average measured vancomycin concentrations of samples, [n = 15; range: (55.7 to 65.7 µg/mL) (38.4 to 45.3 µmol/L)] collected in heparin collection tubes, were –10.5% (range: –19.0 to 5.1%) of measured concentrations in control (red top) serum collection tubes. Samples [n = 10; range: (55.2 to 65.7 µg/mL) (38.0 to 45.3 µmol/L)] collected in EDTA collection tubes had measured vancomycin concentrations of –4.9% (range: –13.3 to 7.8%) compared to control red top serum collection tubes.

The following recommendations for handling and storing blood samples are furnished by the National Committee for Clinical Laboratory Standards (NCCLS):[7]

- Collect all blood samples observing universal precautions for venipuncture.
- Allow samples to clot adequately before centrifugation.
- Keep tubes stoppered and upright at all times.
- Tightly cap and refrigerate specimens at 2 to 8°C if the assay is not run immediately.

564

NOTE: To avoid *in vitro* degradation of vancomycin, storage of samples at 2 to 8°C is recommended. Samples left at room temperature for longer than 8 hours, including time onboard, may yield erroneous results.

- Freeze samples at or below -20°C if the sample is not assayed within 48 hours.
- Freeze samples only once and mix thoroughly after thawing. Frozen specimens can remain frozen up to 6 months in non-frost free freezers.

Before placing samples on the system ensure that:

- Samples are free of fibrin or other particulate matter.
- Samples are free of bubbles.

In vitro studies have demonstrated that vancomycin degrades to crystalline degradation product CDP-1 when samples are stored at elevated temperatures for extended periods of time.[8]

The optimum sampling time for peak levels has been reviewed in the literature.[3,9-11] Therapeutic ranges are based on samples taken up to 2 hours after an IV infusion or 1 hour after a bolus injection.[3] Trough concentrations should be determined using samples drawn before the next scheduled dose.[8]

Reagents

Store the reagents upright at 2–8°C.
Mix all primary reagent packs by hand before loading them onto the system. Visually inspect the bottom of the reagent pack to ensure that all particles are dispersed and resuspended. For detailed information about preparing the reagents for use, refer to Appendix C, *Handling Reagents*.

Reagent Pack	Reagent	Volume	Ingredients	Storage	Stability
ADVIA Centaur VANC ReadyPack primary reagent pack	Lite Reagent	5.0 mL/ reagent pack	vancomycin (~6 ng/mL) coupled to bovine serum albumin labeled with acridinium ester in buffered saline with sodium azide (< 0.1%) and preservatives	2–8°C	until the expiration date on the pack label. For onboard stability, refer to *Onboard Stability and Calibration Interval.*
	Solid Phase	20.0 mL/ reagent pack	monoclonal mouse anti-vancomycin (~6.7 µg/mL) covalently coupled to paramagnetic particles in buffered saline with sodium azide (< 0.1%) and preservatives	2–8°C	until the expiration date on the pack label. For onboard stability, refer to *Onboard Stability and Calibration Interval.*
ADVIA Centaur M-DIL 7 ReadyPack ancillary reagent pack	Multi-Diluent 7	5.0 mL/ reagent pack	human serum with sodium azide (< 0.1%)	2–8°C	until the expiration date on the pack label or 28 consecutive days after accessing the ancillary reagent pack

CAUTION: Sodium azide can react with copper and lead plumbing to form explosive metal azides. On disposal, flush reagents with a large volume of water to prevent the buildup of azides, if disposal into a drain is in compliance with federal, state, and local requirements.

CAUTION! POTENTIAL BIOHAZARD: Contains human source material. While each human serum or plasma donor unit used in the manufacture of this product was tested by FDA-approved methods and found nonreactive for hepatitis B surface antigen (HBsAg), antibody to hepatitis C (HCV), and antibody to HIV-1/2, all products manufactured using human source material should be handled as potentially infectious. Because no test method can offer complete assurance that hepatitis B or C viruses, HIV, or other infectious agents are absent, these products should be handled according to established good laboratory practices.[12-14]

CAUTION: This device contains material of animal origin and should be handled as a potential carrier and transmitter of disease

565

For *In Vitro* Diagnostic Use.

Loading Reagents

Ensure that the system has sufficient primary and ancillary reagent packs. For detailed information about preparing the system, refer to the system operating instructions or to the online help system.

CAUTION: Mix all primary reagent packs by hand before loading them onto the system. Visually inspect the bottom of the reagent pack to ensure that all particles are dispersed and resuspended. For detailed information about preparing the reagents for use, refer to Appendix C, *Handling Reagents*.

Load the ReadyPack reagent packs in the primary reagent area using the arrows as a placement guide. The system automatically mixes the primary reagent packs to maintain homogeneous suspension of the reagents. For detailed information about loading reagents, refer to the system operating instructions or to the online help system.

If automatic dilution of a sample is required, load ADVIA Centaur Multi-Diluent 7 in the ancillary reagent entry.

Onboard Stability and Calibration Interval

Onboard Stability	Calibration Interval
14 days	14 days

Additionally, the ADVIA Centaur Vancomycin assay requires a two-point calibration:

- when changing lot numbers of primary reagent packs
- when replacing system components
- when quality control results are repeatedly out of range

CAUTION:

- Discard the primary reagent packs at the end of the onboard stability interval.
- Do not use reagents beyond the expiration date.

Master Curve Calibration

The ADVIA Centaur Vancomycin assay requires a Master Curve calibration when using a new lot number of Lite Reagent and Solid Phase. For each new lot number of Lite Reagent and Solid Phase, use the barcode reader or keyboard to enter the Master Curve values on the system. The Master Curve card contains the Master Curve values. For detailed information about entering calibration values, refer to the system operating instructions or to the online help system.

Quality Control

For detailed information about entering quality control values, refer to the system operating instructions or to the online help system.

To monitor system performance and chart trends, as a minimum requirement, two levels of quality control material should be assayed on each day that samples are analyzed. Quality control samples should also be assayed when performing a two-point calibration. Treat all quality control samples the same as patient samples.

Siemens Healthcare Diagnostics recommends the use of commercially available quality control materials with at least 2 levels (low and high). A satisfactory level of performance is achieved when the analyte values obtained are within the Acceptable Control Range for the system or within your range, as determined by an appropriate internal laboratory quality control scheme.

If the quality control results do not fall within the Expected Values or within the laboratory's established values, do not report results. Take the following actions:

- Verify that the materials are not expired.
- Verify that required maintenance was performed.
- Verify that the assay was performed according to the instructions for use.
- Rerun the assay with fresh quality control samples.
- If necessary, contact your local technical support provider or distributor for assistance.

Sample Volume

This assay requires 40 µL of sample for a single determination. This volume does not include the unusable volume in the sample container or the additional volume required when performing duplicates or other tests on the same sample. For detailed information about determining the minimum required volume, refer to *Sample Volume Requirements* in the *ADVIA Centaur Reference Manual.*

NOTE: The sample volume required to perform onboard dilution differs from the sample volume required to perform a single determination. Refer to the following information for the sample volume required to perform onboard dilutions:

Dilution	Sample Volume (µL)
1:2	100
1:5	40

Assay Procedure

For detailed procedural information, refer to the system operating instructions or to the online help system.

Procedural Notes

Calculations

For detailed information about how the system calculates results, refer to the system operating instructions or to the online help system.

The system reports serum vancomycin results in µg/mL (mass units) or µmol/L (SI units), depending on the units defined when setting up the assay. The conversion formula is 1 µg/mL = 0.690 µmol/L.

Dilutions

- Samples with vancomycin levels greater than 90 µg/mL (62 µmol/L) must be diluted and retested to obtain accurate results.
- Patient samples can be automatically diluted by the system or prepared manually.
- For automatic dilutions, ensure that ADVIA Centaur Multi-Diluent 7 is loaded and set the system parameters as follows:

  Dilution point: ≤ 90 µg/mL (62 µmol/L)

  Dilution factor: 2, 5

  For detailed information about automatic dilutions, refer to the system operating instructions or to the online help system.
- Manually dilute the patient samples when patient results exceed the linearity of the assay using automatic dilution, or when laboratory protocol requires manual dilution.
- Use Multi-Diluent 7 to manually dilute patient samples, and then load the diluted sample in the sample rack, replacing the undiluted sample.
- Ensure that results are mathematically corrected for dilution. If a dilution factor is entered when scheduling the test, the system automatically calculates the result.

Disposal

Dispose of hazardous or biologically contaminated materials according to the practices of your institution. Discard all materials in a safe and acceptable manner, and in compliance with all federal, state, and local requirements.

Limitations

Heterophilic antibodies in human serum can react with reagent immunoglobulins, interfering with *in vitro* immunoassays.[15] Patients routinely exposed to animals or to animal serum products can be prone to this interference and anomalous values may be observed. Additional information may be required for diagnosis.

Serum specimens that are . . .	Demonstrate < 5% change in results up to . . .
hemolyzed	500 mg/dL of hemoglobin
lipemic	1000 mg/dL of triglycerides
icteric	20 mg/dL of bilirubin

Expected Results

Due to differences in sampling times relative to drug administration, vancomycin therapeutic ranges differ in the literature.[3,8-10] Achieving peak concentrations in the range of 30 to 40 µg/mL (20.7 to 27.6 µmol/L) and trough concentrations in the range of 5 to 10 µg/mL (3.45 to 6.9 µmol/L) has historically been recommended.[3,10]

Ototoxicity has been associated with peak concentrations exceeding 80 µg/mL (55.2 µmol/L).[4] Nephrotoxicity at a low incidence rate has been associated with trough concentrations greater than 20 µg/mL (13.8 µmol/L).[9,10] A higher frequency of nephrotoxicity has been demonstrated with the coadministration of an aminoglycoside, although a cause and effect relationship has not been demonstrated.[3,9,10]

As with all therapeutic agents, vancomycin concentrations must be evaluated in conjunction with the complete clinical profile to provide effective therapy.[16]

Performance Characteristics

Specificity

The cross-reactivity of the ADVIA Centaur Vancomycin assay with a substance can be expressed as the ratio of:

- the amount of vancomycin required to displace 50% of the maximally bound labeled vancomycin from the anti-vancomycin, and
- the amount of the cross-reactant required to give the same 50% displacement.

In the ADVIA Centaur Vancomycin assay, 5.9 µg/mL (4.07 µmol/L) vancomycin is required to give 50% displacement. Crystalline degradation product, CDP-1, which is observed in some dialysis patients, showed 1.5% cross-reactivity by this method when spiked to 400 µg/mL.

CDP-1 was evaluated in analyte free serum at added concentrations from 10 to 1000 µg/mL. Percent cross-reactivity is calculated as:

$$\% \text{ cross-reactivity} = \frac{[ED_{50} \text{ vancomycin}]}{ED_{50} \text{ CDP-1}} \times 100$$

Compound	ED_{50} (µg/mL)	% Cross-reactivity
Vancomycin HCl	5.9	100
CDP-1M	400	1.5

In addition, pooled serum samples at peak therapeutic vancomycin levels were spiked with the compounds listed below to concentrations as shown. ADVIA Centaur Vancomycin assay results from the spiked samples were compared with those of unspiked control samples. These compounds did not have a significant effect on the vancomycin measurement ($p < 0.05$, t-test).

Cross-reactant	Added (µg/mL)	Cross-reactant	Added (µg/mL)
Acetaminophen	200	Kanamycin A	160
Amikacin	150	Kanamycin B	160
Ampicillin	50	Lincomycin	200
Amphotericin B	20	Methicillin	200
Bendroflumethiazide	20	Methotrexate	4500
Caffeine	100	Methylprednisolone	200
Carbenicillin	2000	Nalidixic acid	500
Cefamandole Nafate	500	Neomycin	100
Cefazolin	4000	Netilimicin	100
Cephalexin	160	Nitrofurantoin	20
Cephaloglycin	180	Oxytetracycline	40
Cephaloridine	350	Penicillin G	15 U/mL
Cephalosporin C	160	Penicillin V	15 U/mL
Cephalothin	1000	Phenacetin	300
Chloramphenicol	250	Polythiazide	20
Chlorothiazide	100	Prednisolone	200
Ciprofloxacin	200	Rifampin	50
Clindamycin	150	Spectinomycin	300
Erythromycin	200	Streptomycin	200
Ethacrynic acid	20	Sulfadiazine	500
Ethambutol	60	Sulfamethoxazole	200
5-Fluorocytosine	30	Sulfisoxazole	1000
Furosemide	20	Tetracycline	40
Gentamicin	120	Ticaricillin	20
Heparin	8000 U/mL	Tobramycin	100
Hydrochlorothiazide	200	Trimethoprim	200
Isoniazid	70		

Interference testing was determined according to NCCLS Document EP7-P.[17]

569

Sensitivity and Assay Range

The ADVIA Centaur Vancomycin assay measures vancomycin concentrations up to 90 µg/mL (62 µmol/L) with a minimum detectable concentration (analytical sensitivity) of 0.67 µg/mL (0.46 µmol/L). Analytical sensitivity is defined as the concentration of vancomycin that corresponds to the RLUs that are two standard deviations less than the mean RLUs of 20 replicate determinations of the Vancomycin zero standard.

Method Comparison

For 315 serum samples in the range of 0.7 to 84.8 µg/mL (0.5 to 58.5 µmol/L), the relationship between the ADVIA Centaur Vancomycin assay and the ACS:180® Vancomycin assay is described by the equation:

ADVIA Centaur Vancomycin = 1.02 (ACS:180 Vancomycin) + 0.68 µg/mL

Correlation coefficient (r) = 0.99

Dilution Recovery

Five human serum samples in the range of 73.6 to 78.5 µg/mL (50.8 to 54.2 µmol/L) were diluted 1:2, 1:4, 1:8, and 1:16 with Multi-Diluent 7 and assayed for recovery and parallelism. The recoveries ranged from 85.7 to 106.4% with a mean of 95.2%.

Sample	Dilution	Observed (µg/mL)	Expected (µg/mL)	Observed (µmol/L)	Expected (µmol/L)	Recovery %
1	—	73.6		50.8		
	1:2	36.5	36.8	25.2	25.4	99.2
	1:4	17.1	18.4	11.8	12.7	92.9
	1:8	8.2	9.2	5.7	6.3	89.1
	1:16	4.1	4.6	2.8	3.2	89.1
	Mean					92.6
2	—	78.5		54.2		
	1:2	37.1	39.2	25.6	27.0	94.6
	1:4	17.1	19.6	11.8	13.5	87.2
	1:8	8.9	9.8	6.1	6.8	90.8
	1:16	4.2	4.9	2.9	3.4	85.7
	Mean					89.6
3	—	78.1		53.9		
	1:2	38.1	39.1	26.3	27.0	97.4
	1:4	18.9	19.5	13.0	13.5	96.9
	1:8	9.2	9.8	6.3	6.8	93.9
	1:16	4.7	4.9	3.2	3.4	95.9
	Mean					96.0
4	—	75.0		51.8		
	1:2	36.7	37.5	25.3	25.9	97.9
	1:4	17.6	18.8	12.1	13.0	93.6
	1:8	8.9	9.4	6.1	6.5	94.7
	1:16	4.4	4.7	3.0	3.2	93.6
	Mean					95.0
5	—	74.4		51.3		
	1:2	38.1	37.2	26.3	25.7	102.4
	1:4	18.8	18.6	13.0	12.8	101.1
	1:8	9.5	9.3	6.6	6.4	102.2
	1:16	5.0	4.7	3.5	3.2	106.4
	Mean					103.0
Mean						**95.2**

570

Spiking Recovery

Varying amounts of vancomycin were added to five vancomycin-free normal serum samples. The recoveries ranged from 91.3 to 103.6% with a mean of 97.7%.

Sample	Amount Added (µg/mL)	Observed (µg/mL)	Amount Added (µmol/L)	Observed (µmol/L)	Recovery %
1	—	0.0	—	0.0	
	5	5.0	3.5	3.5	100.0
	15	14.9	10.4	10.3	99.3
	30	30.4	20.7	21.0	101.3
	50	51.8	34.5	35.7	103.6
	75	74.3	51.8	51.3	99.1
	Mean				100.7
2	—	0.0	—	0.0	
	5	4.8	3.5	3.3	96.0
	15	13.9	10.4	9.6	92.7
	30	29.4	20.7	20.3	98.0
	50	48.8	34.5	33.7	97.6
	75	71.7	51.8	49.5	95.6
	Mean				96.0
3	—	0.0	—	0.0	
	5	4.8	3.5	3.3	96.0
	15	14.5	10.4	10.0	96.7
	30	28.6	20.7	19.7	95.3
	50	48.9	34.5	33.7	97.8
	75	70.4	51.8	48.6	93.9
	Mean				95.9
4	—	0.0	—	0.0	
	5	4.9	3.5	3.4	98.0
	15	13.7	10.4	9.5	91.3
	30	28.7	20.7	19.8	95.7
	50	49.5	34.5	34.2	99.0
	75	74.7	51.8	51.5	99.6
	Mean				96.7
5	—	0.0	—	0.0	
	5	5.0	3.5	3.5	100.0
	15	14.3	10.4	9.9	95.3
	30	30.0	20.7	20.7	100.0
	50	49.4	34.5	34.1	98.8
	75	76.4	51.8	52.7	101.9
	Mean				99.2
Mean					**97.7**

Precision

Five samples were assayed 3 times in 18 assays, on 3 systems (n = 54 for each sample), over a period of 3 days. The following results were obtained:

Mean (µg/mL)	Mean (µmol/L)	Within-run % CV	Run-to-run % CV	Total % CV
3.6	2.5	5.2	1.7	5.5
8.6	5.9	5.0	1.8	5.8
30.0	20.7	3.7	2.0	4.7
55.9	38.6	3.8	2.2	4.4
72.3	49.9	3.5	0.9	3.6

571

Traceability of Standardization

The ADVIA Centaur Vancomycin assay is traceable to an internal standard manufactured using U.S.P. (United States Pharmacopeia) material. Assigned values for calibrators are traceable to this standardization.

Technical Assistance

For customer support, please contact your local technical support provider or distributor.

www.siemens.com/diagnostics

References

1. Moyer TP, Pippenger CE, Blanke RV et al. Therapeutic drug monitoring. In: Tietz NW editor. Fundamentals of clinical chemistry 3rd ed. Philadelphia: WB Saunders, 1987. p.842–68.
2. Keller F, Horstensmeyer C, Looby M et al. Vancomycin dosing in haemodialysis patients and bayesian estimate of individual pharmacokinetic parameters. Int J Artif Organs 1994;17(1): 19–26.
3. Bennett DR, editor. Miscellaneous antibacterial drugs. In: Drug Evaluations Annual 1995. p.1593–1598.
4. Cantu TG, Yamanaka-Yuen NA, Lietman PS. Serum vancomycin concentrations: reappraisal of their clinical value. Clin Infect Dis 1994;18:533–43.
5. Rolston KVI, Nguyen H, Amos G et al. A randomized double-blind trial of vancomycin versus teicoplanin for the treatment of gram-positive bacteremia in patients with cancer. J Infect Dis 1994;169: 350–5.
6. Reagent Water Technical Bulletin. Siemens Healthcare Diagnostics, 107060.
7. National Committee for Clinical Laboratory Standards. Procedures for the handling and processing of blood specimens; second edition; approved guideline. NCCLS Document H18-A2; Wayne (PA): NCCLS; 1999 Oct. 40p.
8. Morse GD, Mairn DK, Bertino JS, Walshe JJ. (Overestimation of vancomycin concentrations utilizing fluorescence polarization immunoassay in patients on peritoneal dialysis.) Ther Drug Monit 1978. 9:212–5.
9. Matze GR, Zhanel GG, Guay DRP. Clinical pharmacokinetics of vancomycin. Clin Pharmacokinetics 1986;11: 257–282.
10. Cheung RPF, DiPiro JT. Vancomycin: an update. Pharmacotherapy 1986;6: 153–169.
11. Healy DP, Polk RE, Garson ML et al. Comparison of steady-state pharmacokinetics of two dosage regimens of vancomycin in normal volunteers. Antimicrob Agents and Chemotherapy 1987. p.393–397.
12. Centers for Disease Control. 1988. Update: Universal precautions for prevention of transmission of human immunodeficiency virus, hepatitis B virus and other bloodborne pathogens in healthcare settings. MMWR, 37:377–382, 387, 388.
13. National Committee for Clinical Laboratory Standards. Protection of laboratory workers from occupationally acquired infections-second edition; approved guideline. NCCLS Document M29-A2; Wayne (PA): NCCLS; 2001 Dec. 105p.
14. Federal Occupational Safety and Health Administration, Bloodborne Pathogens Standard, 29 CFR 1910.1030.
15. Boscato LM, Stuart MC. Heterophilic antibodies: a problem for all immunoassays. Clin Chem 1988;34:27–33.
16. National Committee for Clinical Laboratory Standards. How to define, determine, and utilize reference intervals in the clinical laboratory. Approved Guideline. NCCLS publication C28-A. Wayne, PA: NCCLS. 1995.
17. National Committee for Clinical Laboratory Standards. Interference testing in clinical chemistry. Proposed Guideline. NCCLS document EP7-P. Wayne (PA):NCCLS;1986.

ADVIA Centaur, ReadyPack, and ACS:180 are trademarks of Siemens Healthcare Diagnostics.

© 2008 Siemens Healthcare Diagnostics Inc. All rights reserved.

US Pats 4,745,181; 4,918,192; 5,110,932; 5,609,822; 5,788,928

Origin: US

Siemens Healthcare Diagnostics Inc.
Tarrytown, NY 10591-5097 USA

EC REP Siemens Healthcare Diagnostics Ltd.
Sir William Siemens Sq.
Frimley, Camberley, UK GU16 8QD

Siemens Healthcare
Diagnostics Pty Ltd
885 Mountain Highway
Bayswater Victoria 3153
Australia

シーメンスヘルスケア・
ダイアグノスティクス株式会社
東京都品川区東五反田 3−20−14
Siemens Healthcare Diagnostics
輸入

SIEMENS

CE

ADVIA Centaur®
ADVIA Centaur® XP
Immunoassay Systems

VB12

Assay Summary

Sample Type	**Serum, Heparinized Plasma, EDTA Plasma'**
Sample Volume	**100 µL**
Calibrator	**C**
Sensitivity and Assay Range	**45–2000 pg/mL (33–1476 pmol/L)**

Contents

REF	Contents	Number of Tests
09544818 (110748)	5 ReadyPack® primary reagent packs containing ADVIA Centaur® VB12 Lite Reagent and Solid Phase ADVIA Centaur VB12 Master Curve card	500
or		
07847260 (110747)	1 ReadyPack primary reagent pack containing ADVIA Centaur VB12 Lite Reagent and Solid Phase ADVIA Centaur VB12 Master Curve card	100

Intended Use

For *in vitro* diagnostic use in the quantitative determination of vitamin B12 in serum or plasma using the ADVIA Centaur and ADVIA Centaur XP systems.

Materials Required but Not Provided

REF	Description	Contents
06567787	Calibrator C	6 vials of low calibrator CAL L
(672182)		6 vials of high calibrator CAL H
or		
03439230	Calibrator C	2 vials of low calibrator CAL L
(672172)		2 vials of high calibrator CAL H
03536015	VB12 DTT/Releasing Agent REL	1 vial of DTT
(121093)		2 vials of Releasing Agent
		1 sheet of pack seals
01514596 (110329)	ADVIA Centaur T3/T4/VB12 Ancillary Reagent ANC	6 ReadyPack ancillary reagent packs containing 25 mL/pack
or		
03644012 (110328)	ADVIA Centaur T3/T4/VB12 Ancillary Reagent ANC	2 ReadyPack ancillary reagent packs containing 25 mL/pack

Optional Reagents

REF	Description	Contents
02531958 (110321)	ADVIA Centaur VB12 Diluent [OIL]	2 ReadyPack ancillary reagent packs containing 5 mL/pack
02549342 (105441)	VB12 Diluent [OIL]	15 mL/vial
104523	VB12 Master Curve Material	6 x 1 mL

Summary and Explanation of the Test

Vitamin B_{12}, or cyanocobalamin, is a complex corrinoid compound containing four pyrrole rings that surround a single cobalt atom.[1] Humans obtain vitamin B_{12} exclusively from animal dietary sources, such as meat, eggs, and milk.[2] Vitamin B_{12} requires intrinsic factor, a protein secreted by the parietal cells in the gastric mucosa, for absorption. Vitamin B_{12} and intrinsic factor form a complex that attaches to receptors in the ileal mucosa, where proteins known as trans-cobalamins transport the vitamin B_{12} from the mucosal cells to the blood and tissues.[3,4] Most vitamin B_{12} is stored in the liver as well as in the bone marrow and other tissues.

Vitamin B_{12} and folate are critical to normal DNA synthesis, which in turn affects erythrocyte maturation.[3] Vitamin B_{12} is also necessary for myelin sheath formation and maintenance.[2] The body uses its B_{12} stores very economically, reabsorbing vitamin B_{12} from the ileum and returning it to the liver so that very little is excreted.[4,5]

Clinical and laboratory findings for B_{12} deficiency include neurological abnormalities, decreased serum B_{12} levels, and increased excretion of methylmalonic acid.[4,5] The impaired DNA synthesis associated with vitamin B_{12} deficiency causes macrocytic anemias. These anemias are characterized by abnormal maturation of erythrocyte precursors in the bone marrow, which results in the presence of megaloblasts and in decreased erythrocyte survival.[3,6]

Pernicious anemia is a macrocytic anemia caused by vitamin B_{12} deficiency that is due to lack of intrinsic factor. Low vitamin B_{12} intake, gastrectomy, diseases of the small intestine, malabsorption, and trans-cobalamin deficiency can also cause vitamin B_{12} deficiency.[3]

Assay Principle

The ADVIA Centaur VB12 assay is a competitive immunoassay using direct chemiluminescent technology in which vitamin B_{12} from the patient sample competes with vitamin B_{12} labeled with acridinium ester in the Lite Reagent, for a limited amount of purified intrinsic factor, which is covalently coupled to paramagnetic particles in the Solid Phase. The assay uses Releasing Agent (sodium hydroxide) and DTT to release the vitamin B_{12} from the endogenous binding proteins in the sample and cobinamide to prevent rebinding after the Solid Phase is added to the sample.

The system automatically performs the following actions:

- washes the ancillary reagent probe with 100 µL of T3/T4/VB12 Ancillary Reagent
- dispenses 100 µL of sample into a cuvette
- dispenses 115 µL of DTT/Releasing Agent
- dispenses 200 µL of Solid Phase and incubates for 5.0 minutes at 37°C
- dispenses 200 µL of Lite Reagent and incubates for 2.5 minutes at 37°C
- separates, aspirates, and washes the cuvettes with reagent water[7]
- dispenses 300 µL each of Acid Reagent and Base Reagent to initiate the chemiluminescent reaction

576

- reports results according to the selected option, as described in the system operating instructions or in the online help system

An inverse relationship exists between the vitamin B_{12} in the sample and the relative light units (RLUs) detected by the system.

Specimen Collection and Handling

Serum, heparinized plasma, or EDTA plasma are the recommended sample types for this assay.

The following recommendations for handling and storing blood samples are furnished by the Clinical and Laboratory Standards Institute (CLSI, formerly NCCLS):[8]

- Collect all blood samples observing universal precautions for venipuncture.
- Allow samples to clot adequately before centrifugation.
- Keep tubes stoppered and upright at all times.
- Do not use samples that have been stored at room temperature for longer than 8 hours.
- Tightly cap and refrigerate specimens at 2 to 8°C if the assay is not completed within 8 hours.
- Freeze samples at or below -20°C if the sample is not assayed within 48 hours.
- Freeze samples only once and mix thoroughly after thawing.

Before placing samples on the system, ensure that samples have the following characteristics:

- Samples are free of fibrin or other particulate matter.
- Samples are free of bubbles.

Reagents

Store the reagents upright at 2–8°C.
Mix all primary reagent packs by hand before loading them onto the system. Visually inspect the bottom of the reagent pack to ensure that all particles are dispersed and resuspended. For detailed information about preparing the reagents for use, see the system operator's guide.

Reagent Pack	Reagent	Volume	Ingredients	Storage	Stability
ADVIA Centaur VB12 ReadyPack primary reagent pack	Lite Reagent	20.0 mL/ reagent pack	acridinium ester-labeled vitamin B_{12} (~3 ng/mL) in buffer with sodium azide (0.1%), protein stabilizers, and preservatives	2–8°C	until the expiration date on the pack label. For onboard stability, refer to *Onboard Stability and Calibration Interval.*
	Solid Phase	20.0 mL/ reagent pack	purified hog intrinsic factor (~0.025 µg/mL) covalently coupled to paramagnetic particles in buffer with sodium azide (0.1%), protein stabilizers, cobinamide, and preservatives	2–8°C	until the expiration date on the pack label. For onboard stability, refer to *Onboard Stability and Calibration Interval.*
ADVIA Centaur VB12 DTT/ REL	DTT/Releasing Agent		Refer to *Preparing DTT/ Releasing Agent*	2–8°C	108 hours
ReadyPack ancillary reagent pack	Releasing Agent	25.0 mL/ vial	sodium hydroxide (~0.30N) with potassium cyanide (~1.25 mg/vial)	2–8°C	until the expiration date on the vial label
	DTT	2.0 mL/ vial	dithiothreitol (~210 mg/vial)	2–8°C	until the expiration date on the vial label

577

Reagent Pack	Reagent	Volume	Ingredients	Storage	Stability
ADVIA Centaur T3/T4/VB12 [ANC] ReadyPack ancillary reagent pack	T3/T4/VB12 Ancillary Reagent	25.0 mL/ reagent pack	0.4N sodium hydroxide	2–8°C	until the expiration date on the pack label or 14 consecutive days after accessing the ancillary reagent pack
ADVIA Centaur VB12 [ON] ReadyPack ancillary reagent pack	VB12 Diluent	5.0 mL/ reagent pack	buffered HSA with sodium azide (0.2%) and preservatives	2–8°C	until the expiration date on the pack label or 28 consecutive days after accessing the ancillary reagent pack

CAUTION: Sodium azide can react with copper and lead plumbing to form explosive metal azides. On disposal, flush reagents with a large volume of water to prevent the buildup of azides, if disposal into a drain is in compliance with federal, state, and local requirements.

R22
S28

Harmful! Harmful if swallowed. After contact with skin, wash immediately with plenty of soap and water. **Contains:** sodium azide; Lite Reagent, Solid Phase

R36/38
S26
S37/39

Irritant! Irritating to eyes and skin. In case of contact with eyes, rinse immediately with plenty of water and seek medical advice. Wear suitable gloves and eye/face protection. **Contains:** sodium hydroxide; Releasing Agent, Ancillary Reagent

CAUTION: This device contains material of animal origin and should be handled as a potential carrier and transmitter of disease.

Safety data sheets (MSDS/SDS) available on www.siemens.com/diagnostics.

For *in vitro* diagnostic use.

Preparing DTT/Releasing Agent

CAUTION: Irritant of the eyes and skin. In case of contact with the eyes or skin, wash immediately and copiously with water and then contact a physician.

Use this procedure to prepare the DTT/Releasing Agent.

NOTE: Careful preparation of DTT/Releasing Agent is required to obtain accurate and consistent results since the absolute amount of DTT delivered for each test can affect results. Prepare the DTT/Releasing Agent immediately before using. Use the prepared DTT/Releasing Agent within 108 hours.

1. Add 300 µL DTT to 12.0 mL Releasing Agent in a test tube using a volumetric pipet.
2. Mix the DTT and Releasing Agent in the test tube. Cover the test tube with self-sealing laboratory film and invert the test tube several times to mix.
3. Remove the self-sealing laboratory film and pour the entire contents into the disposable ancillary reagent pack provided.
4. Place a pack seal on the disposable ancillary reagent pack. Ensure that the seal is centered over the opening of the pack, and press firmly on the adhesive portion of the seal.

Using Barcode Labels

NOTE: DTT/Releasing Agent barcode labels are lot number specific. Do not use barcode labels from one lot of DTT/Releasing Agent with any other lot of DTT/Releasing Agent.

578

Loading Reagents

Ensure that the system has sufficient primary and ancillary reagent packs. For detailed information about preparing the system, refer to the system operating instructions or to the online help system.

CAUTION: Mix all primary reagent packs by hand before loading them onto the system. Visually inspect the bottom of the reagent pack to ensure that all particles are dispersed and resuspended. For detailed information about preparing the reagents for use, see the system operator's guide.

Load the ReadyPack reagent packs in the primary reagent area using the arrows as a placement guide. The system automatically mixes the primary reagent packs to maintain homogeneous suspension of the reagents. Load the DTT/Releasing Agent ReadyPack reagent pack and the T3/T4/VB12 Ancillary Reagent ReadyPack reagent pack in the ancillary reagent entry. For detailed information about loading reagents, refer to the system operating instructions or to the online help system.

If automatic dilution of a sample is required, load ADVIA Centaur VB12 Diluent in the ancillary reagent entry.

Onboard Stability and Calibration Interval

Onboard Stability	Calibration Interval
28 days	28 days

Additionally, the ADVIA Centaur VB12 assay requires a two-point calibration:

- when changing lot numbers of primary reagent packs
- when replacing system components
- when quality control results are repeatedly out of range

CAUTION:

- Discard the primary reagent packs at the end of the onboard stability interval. Discard the DTT/Releasing Agent ancillary reagent pack after 108 hours. Discard the T3/T4/VB12 Ancillary Reagent ancillary reagent pack after 14 days.
- Do not use reagents beyond the expiration date.

Master Curve Calibration

The ADVIA Centaur VB12 assay requires a Master Curve calibration when using a new lot number of Lite Reagent and Solid Phase. For each new lot number of Lite Reagent and Solid Phase, use the barcode reader or keyboard to enter the Master Curve values on the system. The Master Curve card contains the Master Curve values. For detailed information about entering calibration values, refer to the system operating instructions or to the online help system.

Quality Control

Follow government regulations or accreditation requirements for quality control frequency.

For detailed information about entering quality control values, refer to the system operating instructions or to the online help system.

To monitor system performance and chart trends, as a minimum requirement, two levels of quality control material should be assayed on each day that samples are analyzed. Quality control samples should also be assayed when performing a two-point calibration. Treat all quality control samples the same as patient samples.

579

Siemens Healthcare Diagnostics recommends the use of commercially available quality control materials with at least 2 levels (low and high). A satisfactory level of performance is achieved when the analyte values obtained are within the Acceptable Control Range for the system or within your range, as determined by an appropriate internal laboratory quality control scheme.

If the quality control results do not fall within the Expected Values or within the laboratory's established values, do not report results. Take the following actions:

- Verify that the materials are not expired.
- Verify that required maintenance was performed.
- Verify that the assay was performed according to the instructions for use.
- Rerun the assay with fresh quality control samples.
- If necessary, contact your local technical support provider or distributor for assistance.

Sample Volume

This assay requires 100 µL of sample for a single determination. This volume does not include the unusable volume in the sample container or the additional volume required when performing duplicates or other tests on the same sample. For detailed information about determining the minimum required volume, refer to *Sample Volume Requirements* in the *ADVIA Centaur Reference Manual.*

NOTE: The sample volume required to perform onboard dilution differs from the sample volume required to perform a single determination. Refer to the following information for the sample volume required to perform onboard dilutions:

Dilution	Sample Volume (µL)
1:2	125
1:10	25

Assay Procedure

For detailed procedural information, refer to the system operating instructions or to the online help system.

Procedural Notes

Calculations

For detailed information about how the system calculates results, refer to the system operating instructions or to the online help system.

The system reports vitamin B_{12} results in pg/mL (mass units) or pmol/L (SI units), depending on the units defined when setting up the assay. The conversion formula is 1 pg/mL = 0.7378 pmol/L.

Dilutions

The following information pertains to dilutions:

- Samples with vitamin B_{12} levels greater than 2000 pg/mL (1476 pmol/L) must be diluted and retested to obtain accurate results.
- Patient samples can be automatically diluted by the system or prepared manually.

580

- For automatic dilutions, ensure that ADVIA Centaur VB12 Diluent is loaded and set the system parameters as follows:

  Dilution point: ≤ 2000 pg/mL (1476 pmol/L)

  Dilution factor: 2, 10

  For detailed information about automatic dilutions, refer to the system operating instructions or to the online help system.
- Manually dilute the patient samples when patient results exceed the linearity of the assay using automatic dilution, or when laboratory protocol requires manual dilution.
- Use VB12 Diluent to manually dilute patient samples, and then load the diluted sample in the sample rack, replacing the undiluted sample.
- Ensure that results are mathematically corrected for dilution. If a dilution factor is entered when scheduling the test, the system automatically calculates the result.

Disposal

Dispose of hazardous or biologically contaminated materials according to the practices of your institution. Discard all materials in a safe and acceptable manner, and in compliance with all federal, state, and local requirements.

Limitations

Preservatives, such as fluoride and ascorbic acid interfere with the ADVIA Centaur VB12 assay.

Excessive exposure to light may alter vitamin B_{12} values.

Dispose of the DTT/Releasing Agent ancillary reagent pack after 108 hours.

A comparison of values for 104 matched sets of serum, heparinized plasma, and EDTA plasma in the range of 147 to 1033 pg/mL (108 to 762 pmol/L) yielded the following equations for each pair:

EDTA plasma VB12 = 1.06 (serum VB12) - 1.3 pg/mL, r = 0.96

Heparinized plasma VB12 = 1.00 (serum VB12) + 24.8 pg/mL, r = 0.96

Specimens that are . . .	Have an insignificant effect on the assay up to . . .
hemolyzed	150 mg/dL of hemoglobin
lipemic	3000 mg/dL of triglycerides
icteric	20 mg/dL of bilirubin

Expected Results

The expected results for the ACS:180® VB12 assay were previously established. Data was obtained on 298 serum samples, including 253 samples from apparently healthy individuals and 45 samples from physician-diagnosed vitamin B12 deficient patients. Ninety-five percent of the values for the apparently healthy individuals fell in the range of 211 to 911 pg/mL (156 to 672 pmol/L).

Category	Median (pg/mL)	Range (pg/mL)	Median (pmol/L)	Range (pmol/L)
Normal	382	211–911	282	156–672
Deficient	160	32–246	118	24–181

581

Refer to the figure below for a scattergram of these results:

Sample Distribution

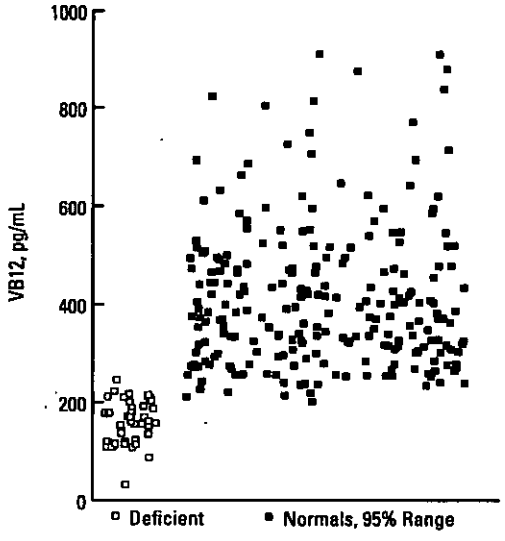

These results were confirmed for the ADVIA Centaur VB12 assay by analyzing 272 serum samples in the range of 97 to 1933 pg/mL (72 to 1426 pmol/L). Refer to *Method Comparison.*

As with all diagnostic assays, each laboratory should determine its own reference range(s) for the diagnostic evaluation of patient results.[9]

Performance Characteristics

Specificity

The cross-reactivity of the ADVIA Centaur VB12 assay with cobinamide was determined by adding 20 ng/mL of cobinamide to samples containing 0, 250, and 1000 pg/mL (0, 184, and 738 pmol/L) of vitamin B_{12}. No interference was found at these levels.

Interference testing was determined according to NCCLS Document EP7-P.[10]

Sensitivity and Assay Range

The ADVIA Centaur VB12 assay measures vitamin B12 concentrations up to 2000 pg/mL (1476 pmol/L) with a minimum detectable concentration (analytical sensitivity) of 45 pg/mL (33 pmol/L). Analytical sensitivity is defined as the concentration of vitamin B12 that corresponds to the RLUs that are two standard deviations less than the mean RLUs of 20 replicate determinations of the VB12 zero standard.

Method Comparison

For 272 serum samples in the range of 97 to 1933 pg/mL (72 to 1426 pmol/L), the relationship between the ADVIA Centaur VB12 assay and the ACS:180 VB12 assay is described by the equation:

ADVIA Centaur VB12 = 1.00 (ACS:180 VB12) + 3 pg/mL

Correlation coefficient (r) = 0.99

582

Dilution Recovery

Five human serum samples in the range 1579.60 to 1995.00 pg/mL (1165.43 to 1471.91 pmol/L) were diluted 1:2, 1:4, 1:8, and 1:16 with VB12 Diluent and assayed for recovery and parallelism. The recoveries ranged from 81.6% to 123.7% with a mean of 97.3%.

Sample	Dilution	Observed (pg/mL)	Expected (pg/mL)	Observed (pmol/L)	Expected (pmol/L)	Recovery %
1	—	1819.60		1342.50		
	1:2	899.00	909.80	663.28	671.25	98.8
	1:4	409.40	454.90	302.06	335.63	90.0
	1:8	208.10	227.50	153.54	167.85	91.5
	1:16	116.30	113.70	85.81	83.89	102.3
	Mean					95.6
2	—	1579.60		1165.43		
	1:2	766.70	789.80	565.67	582.71	97.1
	1:4	371.90	394.90	274.39	291.36	94.2
	1:8	181.80	197.50	134.13	145.72	92.1
	1:16	107.30	98.70	79.17	72.82	108.7
	Mean					98.0
3	—	1826.20		1347.37		
	1:2	866.70	913.10	639.45	673.69	94.9
	1:4	396.60	456.60	292.61	336.88	86.9
	1:8	186.20	228.30	137.38	168.44	81.6
	1:16	141.10	114.10	104.10	84.18	123.7
	Mean					96.8
4	—	1995.00		1471.91		
	1:2	1000.20	997.50	737.95	735.96	100.3
	1:4	460.00	498.80	339.39	368.01	92.2
	1:8	225.70	249.40	166.52	184.01	90.5
	1:16	117.50	124.70	86.69	92.00	94.2
	Mean					94.3
5	—	1605.60		1184.61		
	1:2	811.00	802.80	598.36	592.31	101.0
	1:4	405.70	401.40	299.33	296.15	101.1
	1:8	202.70	200.70	149.55	148.08	101.0
	1:16	104.30	100.40	76.95	74.08	103.9
	Mean					101.7
Mean						**97.3**

583

Spiking Recovery

Varying amounts of vitamin B_{12} were added to four serum samples with endogenous vitamin B12 levels of 253 to 325 pg/mL (187 to 240 pmol/L). The recoveries ranged from 89.2% to 111.8% with a mean of 101.8%.

Sample	Amount Added (pg/mL)	Observed (pg/mL)	Amount Added (pmol/L)	Observed (pmol/L)	Recovery %
1	—	253	—	187	
	250	483	184	356	92.0
	500	770	369	568	103.4
	1000	1293	738	954	104.0
	Mean				99.8
2	—	259	—	191	
	250	501	184	370	96.8
	500	795	369	587	107.2
	1000	1320	738	974	106.1
	Mean				103.4
3	—	259	—	191	
	250	482	184	356	89.2
	500	742	369	547	96.6
	1000	1270	738	937	101.4
	1500	1828	1107	1349	104.6
	Mean				98.0
4	—	325	—	240	
	250	581	184	429	102.4
	500	844	369	623	103.8
	1000	1443	738	1065	111.8
	Mean				106.0
Mean					**101.8**

Precision

Four samples were assayed 6 times, in each of 12 runs, on 6 systems, (n = 72 for each sample), over a period of 3 days. The following results were obtained:

Mean (pg/mL)	Mean (pmol/L)	Within-run % CV	Run-to-run % CV	Total % CV
178.76	131.89	5.0	9.2	10.4
207.22	152.89	4.0	4.4	5.9
608.83	449.19	2.7	2.7	3.8
1343.87	991.51	2.4	3.0	3.9

Traceability of Standardization

The ADVIA Centaur VB12 assay is traceable to an internal standard manufactured using U.S.P. (United States Pharmacopeia) material. Assigned values for calibrators are traceable to this standardization.

Technical Assistance

For customer support, contact your local technical support provider or distributor.

www.siemens.com/diagnostics

584

References

1. Chen IW, Sperling MI, Heminger LA. Vitamin B_{12}. In: Pesce AJ, Kaplan LA, editors. Methods in clinical chemistry. St. Louis: CV Mosby, 1987. p.569–73.
2. Brewster MA. Vitamins. In: Kaplan LA, Pesce AJ, editors. Clinical chemistry: theory, analysis, and correlation. St. Louis: CV Mosby, 1989. p.543–68.
3. Miale JB. Laboratory medicine: hematology. St. Louis: CV Mosby, 1982. p.416–40.
4. Burtis AC, Ashwood ER. Vitamin B_{12}. In: Tietz NW, editor. Textbook of clinical chemistry. Philadelphia: WB Sanders Co., 1994. p.2047–8
5. Steinkamp RC. Vitamin B_{12} and folic acid: clinical and pathophysiological considerations. In: Brewster MA, Naito HK, editors. Nutritional elements and clinical biochemistry. New York: Plenum Publishing Corp., 1980. p.169–240.
6. Beuerlein FJ. Testing strategies for anemias. *Lab Manage* 1988 Dec;23–9.
7. Reagent Water Technical Bulletin. Siemens Healthcare Diagnostics, 107060.
8. National Committee for Clinical Laboratory Standards. Procedures for the handling and processing of blood specimens; second edition; approved guideline. NCCLS Document H18-A2; Wayne (PA): NCCLS; 1999 Oct. 40p.
9. National Committee for Clinical Laboratory Standards. How to define, determine, and utilize reference intervals in the clinical laboratory; approved guideline. NCCLS Document C28-A. Wayne (PA): NCCLS; 1995 June 59p.
10. National Committee for Clinical Laboratory Standards. Interference testing in clinical chemistry. Proposed Guideline. NCCLS document EP7-P. Wayne (PA):NCCLS;1986.

ADVIA Centaur, ReadyPack, and ACS:180 are trademarks of Siemens Healthcare Diagnostics.

© 2011 Siemens Healthcare Diagnostics. All rights reserved.

US Pats 5,110,932; 5,241,070; 5,538,901; 5,609,822; 5,788,928

Origin: US

Siemens Healthcare Diagnostics Inc.
Tarrytown, NY 10591-5097 USA

EC REP Siemens Healthcare Diagnostics Ltd.
Sir William Siemens Sq.
Frimley, Camberley, UK GU16 8QD

Siemens Healthcare
Diagnostics Pty Ltd
885 Mountain Highway
Bayswater Victoria 3153
Australia

595

Understanding the Symbols

The following symbols may appear on the product labeling:

Symbol	Definition	Symbol	Definition
IVD	*In vitro* diagnostic medical device	REF	Catalog number
	Manufacturer	EC REP	Authorized Representative in the European Community
CE	CE Mark	CE 0088	CE Mark with identification number of notified body
	Consult instructions for use		Caution! Potential Biohazard
	Do not freeze (> 0°C)	2°C 8°C	Temperature limitation (2–8°C)
2°C	Lower limit of temperature (≥ 2°C)	-10°C	Upper limit of temperature (≤ -10°C)
	Keep away from sunlight		Use by
UP	Store upright		Shake the reagent pack vigorously. Refer to *Loading Reagents* in the assay-specific ADVIA Centaur product instructions for detailed information.
LOT	Batch code	Σ XX	Contains sufficient for (n) tests
2010-01	Date format (year-month)	PRINTED WITH SOY INK	Printed with soy ink
	Green dot		Recycle

586

DEPARTMENT OF HEALTH & HUMAN SERVICES

Public Health Service

Food and Drug Administration
2098 Gaither Road
Rockville MD 20850

JUL 17 1997

Thomas F. Flynn
Manager, Regulatory Affairs & Compliance
Chiron Diagnostics Corporation
63 North Street
Medfield, Massachusetts 02052-1688

Re: K971418
ACS Centaur Analyzer
Regulatory Class: I
Product Code: JJE
Dated: June 26, 1997
Received: June 27, 1997

Dear Mr. Flynn:

We have reviewed your Section 510(k) notification of intent to market the device referenced above and we have determined the device is substantially equivalent (for the indications for use stated in the enclosure) to devices marketed in interstate commerce prior to May 28, 1976, the enactment date of the Medical Device Amendments or to devices that have been reclassified in accordance with the provisions of the Federal Food, Drug, and Cosmetic Act (Act). You may, therefore, market the device, subject to the general controls provisions of the Act. The general controls provisions of the Act include requirements for annual registration, listing of devices, good manufacturing practice, labeling, and prohibitions against misbranding and adulteration.

If your device is classified (see above) into either class II (Special Controls) or class III (Premarket Approval), it may be subject to such additional controls. Existing major regulations affecting your device can be found in the Code of Federal Regulations, Title 21, Parts 800 to 895. A substantially equivalent determination assumes compliance with the current Good Manufacturing Practice requirement, as set forth in the Quality System Regulation (QS) for Medical Devices: General regulation (21 CFR Part 820) and that, through periodic (QS) inspections, the Food and Drug Administration (FDA) will verify such assumptions. Failure to comply with the GMP regulation may result in regulatory action. In addition, FDA may publish further announcements concerning your device in the Federal Register. Please note: this response to your premarket notification submission does not affect any obligation you might have under sections 531 through 542 of the Act for devices under the Electronic Product Radiation Control provisions, or other Federal Laws or Regulations.

Under the Clinical Laboratory Improvement Amendments of 1988 (CLIA-88), this device may require a CLIA complexity categorization. To determine if it does, you should contact the Centers for Disease Control and Prevention (CDC) at (770) 488-7655.

This letter will allow you to begin marketing your device as described in your 510(k) premarket notification. The FDA finding of substantial equivalence of your device to a legally marketed predicate device results in a classification for your device and thus, permits your device to proceed to the market.

If you desire specific advice for your device on our labeling regulation (21 CFR Part 801 and additionally 809.10 for in vitro diagnostic devices), please contact the Office of Compliance at (301) 594-4588. Additionally, for questions on the promotion and advertising of your device, please contact the Office of Compliance at (301) 594-4639. Also, please note the regulation entitled, "Misbranding by reference to premarket notification" (21 CFR 807.97). Other general information on your responsibilities under the Act may be obtained from the Division of Small Manufacturers Assistance at its toll-free number (800) 638-2041 or (301) 443-6597 or at its internet address "http://www.fda.gov/cdrh/dsmamain.html".

Sincerely yours,

Steven Gutman

Steven I. Gutman, M.D., M.B.A.
Director
Division of Clinical
Laboratory Devices
Office of Device Evaluation
Center for Devices and
Radiological Health

Enclosure

2

5. Statement of Intended Use

The intended use of the ACS:Centaur system is an automated immunoassay analyzer designed to perform in vitro diagnostic immunochemical assays analysis on clinical specimens using the ACS iImmunoassays. The system menu will include endocrine, anemia, reproductive, cardiac, therapeutic drug, and infectious disease assays. All assays are based on chemiluminescent technology.

6. Summary of Technological Characteristics

ACS assays are dedicated for use on the ACS:180® and the ACS:Centaur utilizes acridinium ester as label and paramagnetic particles as the solid phase. Like the ACS:180®, the ACS:Centaur measures the amount of light emitted during the chemiluminescent reaction. There is direct relationship between the amount of light emitted and amount of antigen in the patient sample. The system will measure both competitive binding assays and sandwich assays.

The ACS:Centaur system uses a Master Curve and a two-point, user-initiated calibration to calibrate all the ACS assays. The Master Curve and the two-point calibration system eliminate the need to measure a full standard curve with each assay or to run calibrators each time the assay is run. The system stores the calibration for the interval specified in the assay product inserts.

Other Technological Features include:

- Photomultiplier used in the photon counting mode
- Automated pipetting of sample and reagents
- Electronic Fluid Sensing on sample and reagents
- Clog detection for samples
- Random access and batch test processing
- Varied test incubations
- Human Interface features including barcode reading, LIS, automated data reduction.
- Automated dilution capabilities

DEPARTMENT OF HEALTH & HUMAN SERVICES

Public Health Service
Food And Drug Administration

Memorandum

Date July 14, 1997

From: Reviewer(s) - Name(s) **JAMES V. CALLAGHAN**

Subject: 510(k) Number **K971418**

To: The Record - It is my recommendation that the subject 510(k) Notification:

- ☐ Refuse to accept.
- ☐ Requires additional information (other than refuse to accept).
- ☒ Accepted for review **April 22, 1997**
- ☒ Is substantially equivalent to marketed devices.
- ☐ NOT substantially equivalent to marketed devices.
- ☐ Other (e.g., exempt by regulation, not a device, duplicate, etc.)

Is this device subject to Postmarket Surveillance?	☐ YES	☒ NO
Is this device subject to the Tracking Regulation?	☐ YES	☒ NO
Was clinical data necessary to support the review of this 510(k)?	☐ YES	☒ NO
Is this a prescription device?	☐ YES	☒ NO
Was this 510(k) reviewed by a Third Party?	☐ YES	☒ NO

This 510(k) contains:

Truthful and Accurate Statement ☐ Requested ☒ Enclosed
(required for originals received 3-14-95 and after)

☒ A.510(k) summary OR ☐ A 510(k) statement

☐ The required certification and summary for class III devices

☒ The indication for use form (required for originals received 1-1-96 and after)

The submitter requests under 21 CFR 807.95 (doesn't apply for SEs):

☐ No Confidentiality ☒ Confidentiality for 90 days ☐ Continued Confidentiality exceeding 90 days

Predicate Product Code with panel and class:

JJE/75/I

Additional Product Code(s) w panel (optional)

REVIEW: [signature] CLCB 7-15-97
(Branch Chief) (Branch Code) (Date)

FINAL REVIEW: [signature] 7/16/97
(Division Director) (Date)

Rec'd. 7/16

Revised:11-20-96

510(k) "SUBSTANTIAL EQUIVALENCE" DECISION-MAKING PROCESS (DETAILED)

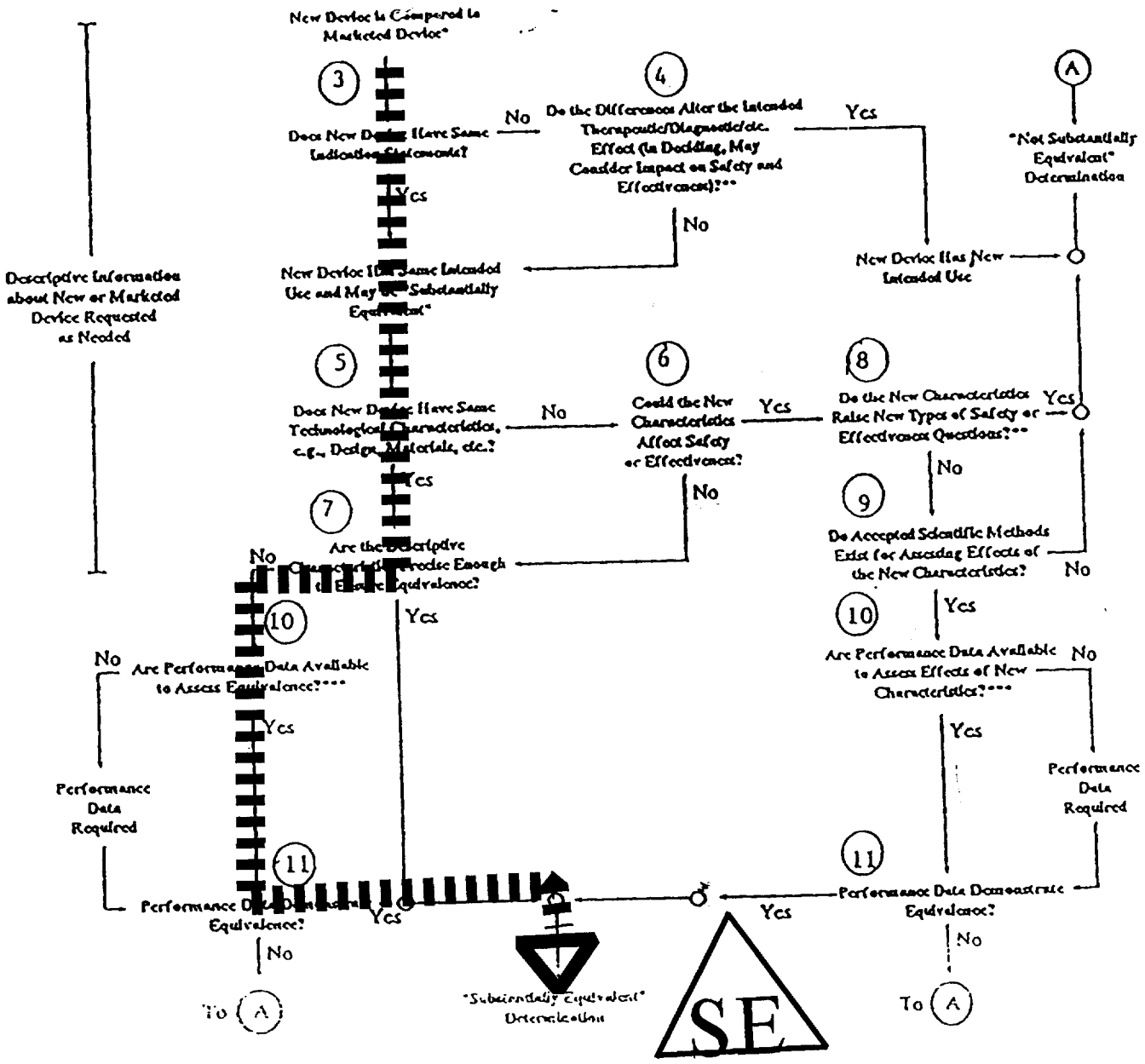

- 510(k) submissions compare new devices to marketed devices. FDA requests additional information if the relationship between marketed and "predicate" (pre-Amendments or reclassified post-Amendments) devices is unclear.

- ** This decision is normally based on descriptive information alone, but limited testing information is sometimes required.

- *** Data may be in the 510(k), other 510(k)s, the Center's classification files, or the literature.

REVISED:3/14/95

THE 510(K) DOCUMENTATION FORMS ARE AVAILABLE ON THE LAN UNDER 510(K) BOILERPLATES TITLED "DOCUMENTATION" AND MUST BE FILLED OUT WITH EVERY FINAL DECISION (SE, NSE, NOT A DEVICE, ETC.).

"SUBSTANTIAL EQUIVALENCE" (SE) DECISION MAKING DOCUMENTATION

K971418

Reviewer: JAMES V. CALLAGHAN

Division/Branch: DCLD/CLCB

Device Name: CHIRON DIAGNOSTICS AUTOMATED CHEMILUMINESCENCE SYSTEM (ACS) CENTAUR ANALYZER

Product To Which Compared (510(K) Number If Known): CIBA CORNING ACS:180 AUTOMATED CHEMILUMINESCENCE K902336

	YES	NO	
1. Is Product A Device	✔		If **NO** = Stop
2. Is Device Subject To 510(k)?	✔		If **NO** = Stop
3. Same Indication Statement?	✔		If **YES** = Go To 5
4. Do Differences Alter The Effect Or Raise New Issues of Safety Or Effectiveness?		✔	If **YES** = Stop **NE**
5. Same Technological Characteristics?	✔		If **YES** = Go To 7
6. Could The New Characteristics Affect Safety Or Effectiveness?			If **YES** = Go To 8
7. Descriptive Characteristics Precise Enough?		✔	If **NO** = Go To 10 If **YES** = Stop **SE**
8. New Types Of Safety Or Effectiveness Questions?			If **YES** = Stop **NE**
9. Accepted Scientific Methods Exist?			If **NO** = Stop **NE**
10. Performance Data Available?	✔		If **NO** = Request Data
11. Data Demonstrate Equivalence?	✔		Final Decision: **SE**

Note: In addition to completing the form on the LAN, "yes" responses to questions 4, 6, 8, and 11, and every "no" response requires an explanation.

DEPARTMENT OF HEALTH & HUMAN SERVICES

Public Health Service
Food And Drug Administration
Memorandum

DATE: July 14, 1997

FROM: James V. Callaghan CLCB

TO: The Record

SUBJECT: CHIRON DIAGNOSTICS CORP.'s, 510k submission for the CHIRON DIAGNOSTICS AUTOMATED CHEMILUMINESCENCE SYSTEM (ACS) CENTAUR ANALYZER

K971418 ..... Submission - Clinical Chemistry Branch For Tier II
Content and Format of a 510k Submission as specified under 21 CFR 807.90

1. **Submitter's name,** **CHIRON DIAGNOSTICS CORP.**
   Address: ..... 63 NORTH ST.
   ..... MEDFIELD, MA 02052
   Telephone ..... 508 -359-7711 Fax 508 -359-3599
   Contact person, ... WILLIAM J. PIGNATO
   Establishment Registration Number: 1519113

2. Device name: **CHIRON DIAGNOSTICS AUTOMATED CHEMILUMINESCENCE SYSTEM (ACS) CENTAUR ANALYZER**
   Proprietary/Trade name: CHIRON DIAGNOSTICS AUTOMATED CHEMILUMINESCENCE SYSTEM (ACS) CENTAUR ANALYZER
   Common Name: .... ANALYZER, CHEMISTRY (PHOTOMETRIC, DISCRETE), FOR CLINICAL USE
   Classification Name: ..... Discrete Photometric Chemistry Analyzere
   - ..... Discrete Photometric Chemistry Analyzer

   Primary Regulatory information
   Device Classification: I
   Regulation Number: ..... 21 CFR 862.2160
   Product Code: ..... JJE
   Panel: ..... CH

3. Identification of the Predicate Device:
   Predicate Device Name ..... CIBA CORNING ACS:180 AUTOMATED CHEMILUMINESCENCE
   Manufacturer ..... CIBA CORNING DIAGNOSTICS CORP.
   510k Number or Clearance Information - K902336
   Predicate Device Labeling ..... see N/A (on file)

   - A complete description of the subject device is included in the submission.
   - ..... see Page 249 of original submission

4. A statement of the Intended Use and Indications for Use of the subject device is included in the submission
   - ..... see Page 259 of original submission

5. Substantial Equivalence

An adequate discussion is included, of how the CHIRON DIAGNOSTICS AUTOMATED CHEMILUMINESCENCE SYSTEM (ACS) CENTAUR ANALYZER is substantially equivalent to the CIBA CORNING ACS:180 AUTOMATED CHEMILUMINESCENCE. Relevant topics such as a descriptive comparison of the following items: methodology, test principle, sample requirements, physical dimensions, throughput, analysis time, software support, calibration requirements, etc.

- ..... see Pages 249-250 of original submission

6. Technological Characteristics of the Device

A discussion is provided of information concerning the operation, function, methodology, and principles of the subject device.

- ..... see Pages 249-250 of original submission

7. Performance Characteristics and Data

A discussion of the performance data for the subject device including protocols, raw data points, graphical representation, and analyses or conclusions for the following parameters as applicable (see check list) and:

- ..... see Sections 3 & 4 dated July 2, 1997

8. Labeling/Promotional Materials

Provided are of the labeling. Labeling conforms to the format and order of 809.10(b) (see check list) and see: Operator manual of original submission

9. Summary of Safety & Effectiveness in the format specified under 21 CFR 807.92

10. Truthful & Accurate Statement

- ..... see Page 15 of original submission

11. Indications for Use Form

- ..... see Page 259 of original submission

12. Software documentation that conforms to Reviewer Guidance for Computer Controlled Medical Devices Undergoing 510(k) Review.

- Description ..... see Pages 251-253 of original submission
- Certification Statement ..... see Section 5 dated July 2, 1997

In order to complete K971418, CHIRON DIAGNOSTICS CORP. adequatly responced to unable to Determine letter dated June 11, 1997

Based on the materials reviewed in CHIRON DIAGNOSTICS CORP.'s premarket notification, I recommend finding the CHIRON DIAGNOSTICS AUTOMATED CHEMILUMINESCENCE SYSTEM (ACS) CENTAUR ANALYZER Substantially Equivalent to other Discrete Photometric Chemistry Analyzere regulation 21 CFR 862.2160 Class I Device.

James V. Callaghan, MT(ASCP)
Scientific Reviewer
FDA/CDRH/DCLD/CLCB

Chiron Diagnostics Corp.'S, Submission For The Chiron Diagnostics Automated Chemiluminescence System (Acs) Centaur Analyzer					
Check each box either: Present (Yes/"Y") or Not Present (No/"N"/Not applicable). Provide an explanation for every item indicated as either "N" or "N/A"					
Specific Performance Characteristics			Y	N	N/A
	Method Comparison	- Slope, Intercept	✔		
		- Correlation	✔		
		- Range of Samples	✔		
		- Standard Error Est.	✔		
		- Bias	✔		
		- Number (N=) - Sample Comparability for Each Sample Type Claimed, e.g., Whole Blood, Serum, Plasma, Etc.	✔		
		-Sample Comparability for Each Sample Type Claimed, e.g., Whole Blood, Serum, Plasma, Etc.	✔		
2)	Precision	Within-run (Assay), and	✔		
		Between-run (Assay), or Total	✔		
		Mean(s), Calculated CV's & SD's	✔		
3)	Linearity	Recovery, Dilution, Parallelism, Other, Etc.			✔
4)	Sensitivity	Min. Detection Limit or Analytical Sensitivity	✔		
		Cutoff	✔		
	High Dose Hook Effect	High Dose Effect			✔
6)	Interferences	Bilirubin, Hemoglobin, Lipids (Triglycerides), Other, Drugs, Anticoagulants, Etc.			✔
7)	Clinical Studies for Near Patient, Bedside, or Physician's Office Use	Locations of studies (3 sites)			✔
		Investigators			✔
		Precision			✔
		Method Comparison			✔
8)	Stability Summary	Calibration Interval			✔
		Quality Control Materials - Shelf-Life			✔
		Calibration Matierials - Shelf-Life			✔
9)	Software	Validation Information	✔		
		Certification Information	✔		
10)	Expected Values	Literature References,			✔
		Population Study,			✔
		Reference Interval(s),			✔
		Medical Decision Point(s)			✔
		Critical Value(s)			✔

DRAFT: 21 CFR § 809.10 Labeling for *In Vitro* Diagnostic Devices - Checklist

21 CFR § 809.10(b) - labeling accompanying each product (package insert) shall bear...in the format and order specified below except where not applicable:

Check each box either, Present (Yes/"Y"), Not Present/Missing (No/"N") or, if Not Applicable (N/A)			Y	N	N/A
(1)	Proprietary & Established Names		✔		
(2)	Intended Use(s)	- state the analyte to be measured			✔
		- state if the test is quantitative or qualitative			✔
		- state the specimen type(s)	✔		
		- state any special instrument requirements			✔
		- state a concise claim of clinical utility			✔
(3)	Summary & Explanation		✔		
(4)	Test Principle		✔		
(5)	Reagents	- quantity, proportion, or concentration			✔
		- biological material (source/measure of activity)			✔
		- precautions, warnings			✔
		- "For *In Vitro* Diagnostic Use"			✔
		- instructions for reconstitution, mixing, or dilution			✔
		- storage instructions (opened/unopened)			✔
(6)	For Instruments: Operation Manual	- name	✔		
		- use/function	✔		
		- installation requirements	✔		
		- principles of operation	✔		
		- performance characteristics/specifications	✔		
		- operating instructions	✔		
		- calibration procedures	✔		
		- precautions/limitations	✔		
		- hazards	✔		
		- service/maintenance requirements	✔		
(7)	Specimen Collection & Preparation	- any special precautions or patient preparation			✔
		- any specimen additives, preservatives			✔
		- any known interferences			✔

10

		- storage, handling requirements			✔ ☐
(8)	Procedure	- a list of materials provided			✔ ☐
		- a list of materials required but not provided			✔ ☐
		- step by step instructions			✔ ☐
		- a description of the stability of the final reaction			✔ ☐
		- details of calibration			✔ ☐
		- details of quality control			✔ ☐
(9)	Results	- sample calculation or formula			✔ ☐
		- description of the results			✔ ☐
(10)	Limitations	- interferences			✔ ☐
		- additional testing requirements			✔ ☐
(11)	Expected Values	- stated range(s)			✔ ☐
		- literature references, or			✔ ☐
		- population characterization			✔ ☐
(12)	Specific Performance Characteristics	- accuracy (method comparison)			✔ ☐
		- precision			✔ ☐
		- specificity (cross-reactivity, etc.)			✔ ☐
		- sensitivity (lower detection limit)			✔ ☐
		- dilution/recovery/linearity			✔ ☐
		- sample comparability			✔ ☐
		- high dose hook effect			✔ ☐
(13)	Bibliography		✔ ☐		
(14)	Name/place of manufacturer, packer, or distributor		✔ ☐		
(15)	Date of last labeling revision		✔ ☐		

Other: For a multi-purpose instrument used for diagnostic purposes...may bear the information in (b) (1), (2), (6), (14), and (15).

K971418/A'

Chiron Diagnostics Corporation
63 North Street
Medfield, Massachusetts 02052-1688
508.359.7711 Fax 508.359.3599

CHIRON | DIAGNOSTICS

RECEIVED
7 JUL 97 10 54
FDA/CDRH/ODE/DHC

July 2, 1997

U.S. Food and Drug Administration
Center for Devices and Radiological Health
Office of Device Evaluation
Document Mail Center (HFZ-401)
9200 Corporate Blvd.
Rockville, MD 20850

Re: K971418
Chiron Diagnostics Automated Chemiluminescence System (ACS) Centaur Analyzer

Chiron Diagnostics is responding to the letter from FDA dated June 19, 1997 and subsequent discussions with the subject reviewer, Mr. James Callaghan, regarding the ACS Centaur 510(k) submission. The FDA letter suggested that the premarket notification is withdrawn and the submission be deleted from FDA's system. Discussions with Mr. Callaghan, following receipt of this letter, resolved the specific issue of withdrawal resulting in the notification remaining on active review. Enclosed is a copy of the letter forwarded to Document Control of the decision not to withdraw the subject 510(k) from active review (Section 1).

With regards to the specific request for additional information, the following is provided:

(b)(4)

[redacted]

12

(b)(4)

[redacted]

We trust this information satisfies the request of FDA that will allow review of the Premarket Notification to proceed.

Sincerely,

William J. Pignato
Director of Regulatory Affairs
(508) 359-3825

cc: Mr. James Callaghan
Division of Clinical Laboratory Devices

CHIRON | DIAGNOSTICS

FILE COPY

June 26, 1997

U.S. Food and Drug Administration
Center for Devices and Radiological Health
Office of Device and Evaluation
Document Mail Center (HFZ-401)
9200 Corporate Blvd.
Rockville, Maryland 20850

7 JUN 97 10 51
FDA/CDRH/OCL/RPC

Subject: 30 Day Letter, Dated June 19, 1997

Reference: **K971418** - Chiron Diagnostics Automated Chemiluminescence System (ACS) Centaur Analyzer

I spoke with Mr. James V. Callaghan within DCLD on June 25, 1997 regarding the subject letter. I informed Mr. Callaghan that Chiron Diagnostics Corporation would provide the requested information within the 30 day timeframe because the data that he requested as the basis to withdraw this 510(k) has been generated and is available. Mr. Callaghan acknowledged this and asked that the information be forwarded to him via the Document Mail Center and that I inform the Document Mail Center of his decision not to withdraw the subject 510(k) from your active review file.

Additionally, I spoke with Ms. Marjorie Shulman on June 26, 1997 and informed her of Mr. Callaghan's decision. It is my understanding that ms. Shulman has changed the status of this 510(k) to active hold.

If you require additional information or have any questions, please call me directly at (508) 359-3877.

Sincerely,

Thomas F. Flynn
Manager, Regulatory Affairs & Compliance

CHIRON DIAGNOSTICS COPORATION
ACS:180 SYSTEM AND ASSAYS 510(k) APPROVAL LIST
Current as of 7/2/97

PRODUCT NAME	DC NUMBER	DATE APPROVED
1. ACS CARBAMAZEPINE ASSAY	K964765	02/14/97
2. ACS CEA	P930017	08/23/94
3. ACS CKMB II IMMUNOASSAY	K962126	06/21/96
4. ACS CORTISOL IMMUNOASSAY	K934317/S2	05/13/94
5. ACS CORTISOL IMMUNOASSAY - URINE	K945367	05/05/95
6. ACS CORTISOL IMMUNOASSAY - EXTRACTED URINE	K962559	11/05/96
7. ACS DIGOXIN IMMUNOASSAY	K931213	06/07/93
8. ACS DPD ASSAY	K963251	10/15/96
9. ACS ESTRADIOL IMMUNOASSAY.	K932715	12/03/93
10. ACS ESTRADIOL-6 IMMUNOASSAY	K954697	12/13/95
11. ACS FERRITIN IMMUNOASSAY	K905770	03/12/91
12. ACS FOLATE IMMUNOASSAY	K943297	12/12/94
13. ACS FT3 IMMUNOASSAY	K940482	04/26/94
14. ACS FrT4 IMMUNOASSAY	K961510	06/17/96
15. ACS FSH IMMUNOASSAY	K904649	11/20/90
16. ACS GENTAMICIN IMMUNOASSAY	K955020	08/02/95
17. ACS HCG IMMUNOASSAY	K925277	03/19/93
18. ACS LH2 IMMUNOASSAY	K962041	06/21/96
19. ACS PHENOBARBITOL IMMUNOASSAY	K953021	12/11/95
20. ACC PHENYTOIN IMMUNASSAY	K955873	3/11/96
21. ACS PROGESTERONE IMMUNOASSAY	K932955	08/02/93
22. ACS PROLACTIN IMMUNOASSAY	K904714	11/07/90
23. ACS PSA	P920030	08/23/94
24. ACS PSA2 (SUPPLEMENT)	P020030/S1	12/13/95
25. ACS T-UP IMMUNOASSAY	K970539	03/24/97
26. ACS T3 IMMUNOASSAY	K923646	10/25/91
27. ACS T4 IMMUNOASSAY	K905532	01/15/91
28. ACS TESTOSTERONE IMMUNOASSAY	K934562/S1	12/01/93
29. ACS THEOPHYLLINE IMMUNOASSAY	K951169	06/20/95
30. ACS TOTAL IGE IMMUNOASSAY	K920372	04/08/92
31. ACS TSH 3 IMMUNOASSAY	K951796	06/13/95
32. ACS TSH IMMUNOASSAY	K910981	04/30/91
33. ACS VANCOMYCIN IMMUNOASSAY	K951059	06/19/95
34. ACS VITAMIN B12 IMMUNOASSAY	K910343	03/06/91

Display 2

Method Comparison Summary

(b)(4)

[redacted]

16

Display 2

Method Comparison Summary

(b)(4)

[redacted]

Display 2

Method Comparison Summary

(b)(4)

[redacted]

Display 2

Method Comparison Summary

(b)(4)

[redacted]

Display 2

Method Comparison Summary

(b)(4)

[redacted]

Display 2

Method Comparison Summary

(b)(4)

(b)(4) Testing

(b)(4) Testing

(b)(4) Testing

(b)(4) Testing

(b)(4) Testing

(b)(4) Testing

Certification

This is to certify in the capacity of Function Manager, Software Engineering / Software SQA, that software design, development and verification quality assurance procedures where adhered to. Testing results demonstrate that system specifications and functional requirements deemed applicable are being met. Validation is currently in-process and the software validation quality assurance procedures are being followed. Software validation will be completed prior to commercialization. Validation is being conducted in accordance with the process outlined in the 510(k) submission.

06/26/97

Daniel G Pogue Date

Function Manager, Software Engineering/Software SQA.

28

K971418/S1

Chiron Diagnostics Corporation
63 North Street
Medfield, Massachusetts 02052-1688
508.359.7711 Fax 508.359.3599

CHIRON | DIAGNOSTICS

June 26, 1997

U.S. Food and Drug Administration
Center for Devices and Radiological Health
Office of Device and Evaluation
Document Mail Center (HFZ-401)
9200 Corporate Blvd.
Rockville, Maryland 20850

RECEIVED
27 JUN 97 10 45
FDA/CDRH/ODE/DMC

Subject: 30 Day Letter, Dated June 19, 1997

Reference: **K971418** - Chiron Diagnostics Automated Chemiluminescence System (ACS) Centaur Analyzer

I spoke with Mr. James V. Callaghan within DCLD on June 25, 1997 regarding the subject letter. I informed Mr. Callaghan that Chiron Diagnostics Corporation would provide the requested information within the 30 day timeframe because the data that he requested as the basis to withdraw this 510(k) has been generated and is available. Mr. Callaghan acknowledged this and asked that the information be forwarded to him via the Document Mail Center and that I inform the Document Mail Center of his decision not to withdraw the subject 510(k) from your active review file.

Additionally, I spoke with Ms. Marjorie Shulman on June 26, 1997 and informed her of Mr. Callaghan's decision. It is my understanding that ms. Shulman has changed the status of this 510(k) to active hold.

If you require additional information or have any questions, please call me directly at (508) 359-3877.

Sincerely,

Thomas F. Flynn
Manager, Regulatory Affairs & Compliance

SK=14

29

DEPARTMENT OF HEALTH AND HUMAN SERVICES

Public Health Service

Food and Drug Administration
Center for Devices and
Radiological Health
Office of Device Evaluation
Document Mail Center (HFZ-401)
9200 Corporate Blvd.
Rockville, Maryland 20850

July 01, 1997

CHIRON DIAGNOSTICS CORP.
63 NORTH ST.
MEDFIELD, MA 02052
ATTN: WILLIAM J. PIGNATO

510(k) Number: K971418
Product: CHIRON DIAGNOSTICS AUTOMATED CHEMILUMINESCENC

The additional information you have submitted has been received.

We will notify you when the processing of this submission has been completed or if any additional information is required. Please remember that all correspondence concerning your submission MUST be sent to the Document Mail Center (HFZ-401) at the above letterhead address. Correspondence sent to any address other than the one above will not be considered as part of your official premarket notification submission. Because of equipment and personnel limitations we cannot accept telefaxed material as part of your official premarket notification submission, unless specifically requested of you by an FDA official.

The Safe Medical Devices Act of 1990, signed on November 28, states that you may not place this device into commercial distribution until you receive a letter from FDA allowing you to do so. As in the past, we intend to complete our review as quickly as possible. Generally we do so 90 days. However, the complexity of a submission or a requirement for additional information may occasionally cause the review to extend beyond 90 days. Thus, if you have not received a written decision or been contacted within 90 days of our receipt date you may want to check with FDA to determine the status of your submission.

If you have procedural or policy questions, please contact the Division of Small Manufacturers Assistance at (301) 443-6597 or at their toll-free number (800) 638-2041, or contact me at (301) 594-1190.

Sincerely yours,

Marjorie Shulman
Supervisory Consumer Safety Officer
Premarket Notification Section
Office of Device Evaluation
Center for Devices and
Radiological Health

30

DEPARTMENT OF HEALTH AND HUMAN SERVICES

Public Health Service

Food and Drug Administration
Center for Devices and
Radiological Health
Office of Device Evaluation
Document Mail Center (HFZ-401)
9200 Corporate Blvd.
Rockville, Maryland 20850

June 26, 1997

CHIRON DIAGNOSTICS CORP.
63 NORTH ST.
MEDFIELD, MA 02052
ATTN: WILLIAM J. PIGNATO

510(k) Number: K971418
Product: CHIRON DIAGNOSTICS AUTOMATED CHEMILUMINESCENC

We are holding your above-referenced Premarket Notification (510(k)) for 30 days pending receipt of the additional information that was requested by the Office of Device Evaluation. Please remember that all correspondence concerning your submission MUST cite your 510(k) number and be sent in duplicate to the Document Mail Center (HFZ-401) at the above letterhead address. Correspondence sent to any address other than the one above will not be considered as part of your official premarket notification submission. Because of equipment and personnel limitations, we cannot accept telefax material as part of your official premarket notification submission unless specifically requested of you by an FDA official.

If after 30 days the requested information, or a request for an extension of time, is not received, we will discontinue review of your submission and proceed to delete your file from our review system. Pursuant to 21 CFR 20.29, a copy of your 510(k) submission will remain in the Office of Device Evaluation. If you then wish to resubmit this 510(k) notification, a new number will be assigned and your submission will be considered a new premarket notification submission.

Please remember that the Safe Medical Devices Act of 1990 states that you may not place this device into commercial distribution until you receive a decision letter from FDA allowing you to do so.

If you have procedural or policy questions, please contact the Division of Small Manufacturers Assistance at (301) 443-6597 or at their toll-free number (800) 638-2041, or contact me at (301) 594-1190.

Sincerely yours,

Marjorie Shulman
Supervisor Consumer Safety Officer
Premarket Notification Section
Office of Device Evaluation
Center for Devices and
Radiological Health

31

DEPARTMENT OF HEALTH & HUMAN SERVICES

Public Health Service

Food and Drug Administration
2098 Gaither Road
Rockville MD 20850

JUN 19 1997

William J. Pignato
Director of Regulatory Affairs
Chiron Diagnostics Corporation
63 North Street
Medfield, Massachusetts 02052

Re: K971418
Chiron Diagnostics Automated Chemiluminescence System (ACS) Centaur Analyzer
Dated: April 14, 1997
Received: April 16, 1997

Dear Mr. Pignato:

We have reviewed your Section 510(k) notification of intent to market the device referenced above and have determined that your submission has major deficiencies. We, therefore, cannot determine if the device is substantially equivalent to a device marketed before May 28, 1976, the enactment date of the Medical Device Amendments, based solely on the information you provided. Because of the significance of the deficiencies identified below, we believe that you cannot adequately respond in 30 days as required by 21 CFR 807.87(h). Therefore, we now consider your premarket notification to be withdrawn and your submission deleted from our system. If you submit the information requested below it will be considered and processed as a new 510(k). All information previously submitted must be resubmitted so that your new 510(k) is complete. So that your new submission is complete, we require the following additional information:

(b)(4) Deficiencies

[redacted]

1

27

(b)(4) Deficiencies

[redacted]

You may not market this device until you have received a letter from FDA allowing you to do so. If you market the device without conforming to this requirement you will be in violation of the Federal Food, Drug, and Cosmetic Act.

If you have questions concerning the contents of this letter, please contact James V. Callaghan at (301) 594-1243. If you need information or assistance concerning the Investigational

2 23

Device Exemption regulations, please contact the Division of Small Manufacturers Assistance at its toll free number (800) 638-2041 or (301) 443-6597.

Sincerely yours,

Alfred Montgomery, D.V.M.
Acting Branch Chief
Clinical Chemistry, Toxicology,
and Hematology Branch
Division of Clinical
Laboratory Devices
Office of Device Evaluation
Center for Devices and
Radiological Health

DEPARTMENT OF HEALTH & HUMAN SERVICES

Public Health Service
Food And Drug Administration

Memorandum

Date June 12, 1997

From: Reviewer(s) - Name(s) **JAMES V. CALLAGHAN**

Subject: 510(k) Number **K971418**

To: The Record - It is my recommendation that the subject 510(k) Notification:

- ☐ Refuse to accept.
- ☒ Requires additional information (other than refuse to accept).
- ☒ Accepted for review April 22, 1997
- ☐ Is substantially equivalent to marketed devices.
- ☐ NOT substantially equivalent to marketed devices.
- ☐ Other (e.g., exempt by regulation, not a device, duplicate, etc.)

Is this device subject to Postmarket Surveillance?	☐ YES	☒ NO
Is this device subject to the Tracking Regulation?	☐ YES	☒ NO
Was clinical data necessary to support the review of this 510(k)?	☐ YES	☒ NO
Is this a prescription device?	☐ YES	☒ NO
Was this 510(k) reviewed by a Third Party?	☐ YES	☒ NO

This 510(k) contains:

Truthful and Accurate Statement ☐ Requested ☒ Enclosed
(required for originals received 3-14-95 and after)

☒ A 510(k) summary OR ☐ A 510(k) statement

☐ The required certification and summary for class III devices

☒ The indication for use form (required for originals received 1-1-96 and after)

The submitter requests under 21 CFR 807.95 (doesn't apply for SEs):

☐ No Confidentiality ☒ Confidentiality for 90 days ☐ Continued Confidentiality exceeding 90 days

Predicate Product Code with panel and class: Additional Product Code(s) with panel (optional)

REVIEW: [signature] CLCB 6-12-97
(Branch Chief) (Branch Code) (Date)

FINAL REVIEW: _____
(Division Director) (Date)

Revised:11-20-96

35

DEPARTMENT OF HEALTH & HUMAN SERVICES

Public Health Service
Food And Drug Administration
Memorandum

DATE: June 12, 1997 **K971418**

FROM: James V. Callaghan **CLCB**

TO: The Record

SUBJECT: Chiron Diagnostics Automated Chemiluminescence System (ACS) Centaur Analyzer; 510k submission

OVERVIEW

Chiron Diagnostics is claiming the Chiron Diagnostics Automated Chemiluminescence System (ACS) Centaur Analyzer is substantially equivalent (SE) to the ACS: 180 K902336 (JJE). Based on this claim and the description provided by Chiron Diagnostics, of the Chiron ACS Centaur Analyzer, comparison and requirements will be to other legally marketed Automated Immunoassay Analyzer; falling under the product code JJE.

The Chiron ACS Centaur Analyzer is intended to perform immunochemical assays analysis on clinical specimens using the ACS immunoassays.

The Chiron ACS Centaur is an Automated Immunoassay Analyzer, which is intended to process ACS assays that are currently cleared for use on the ACS:180 utilizing acridinium ester as label and paramagnetic particles as the solid phase. Like the ACS:180, the ACS Centaur measures the amount of light emitted during the chemiluminescence reaction. There is direct relationship between the amount of light emitted and amount of antigen in the patient sample. The system will measure both competitive binding assays and sandwich assays.

The ACS Centaur uses a Master curve and a two-point, user initiated calibration to calibrate quantitative ACS assays. The Master Curve and the two-point calibration system eliminate the need to measure a full standard curve with each assay or to run calibrators each time the assay is run. The system stores the calibration for the interval specified in the assay product inserts.

Based on Chiron Diagnostics' description and intended use, the Chiron ACS Centaur is classified and regulated by the following:

CH JJE ANALYZER, CHEMISTRY (PHOTOMETRIC, DISCRETE), FOR CLINICAL USE----------862.2160

21 CFR § 862.2160 Discrete Photometric Chemistry Analyzer for Clinical Use.

(a) Identification. A discrete photometric chemistry analyzer for clinical use is a device intended to duplicate manual analytical procedures by performing automatically various steps such as pipetting, preparing filtrates, heating, and measuring color intensity. This device is intended for use in conjunction with certain materials to measure a variety of analytes. Different models of the device incorporate various instrumentation such as micro analysis apparatus, double beam, single, or dual channel photometers, and bichromatic 2-wavelength photometers. Some models of the device may include reagent-containing components that may also serve as reaction units.

(b) Classification. Class I.

5 36

My review of Chiron Diagnostics' 510(k) submission is based on the following.:

PERFORMANCE DATA

Performance data for the Chiron ACS Centaur are not included in this submission.

SOFTWARE DOCUMENTATION

Chiron Diagnostics' software documentation for the development of this and future versions of the Chiron ACS Centaur does not conform to "Computer-Controlled Medical Devices Guidelines Undergoing 510(k) Review."

In order to complete submission, K971418 on the Chiron Diagnostics Automated Chemiluminescence ACS Centaur Analyzer, Chiron Diagnostics will have to provide adequate response to the following:

(b)(4)

[redacted]

(b)(4)

[redacted]

James V. Callaghan, MT(ASCP)
Scientific Reviewer
FDA/CDRH/DCLD/CLCB

REVISED:01/22/96

PREMARKET NOTIFICATION (510(K)) CHECKLIST FOR ACCEPTANCE DECISION

K K971418 Device Name ACS Centaur Analyzer

Division/Branch DCD/CLIB

Administrative Reviewer Signature Dennis Jackson Date 4/22/97

Supervisory Signature _____ Date _____

Did the firm request expedited review? _____Yes ✓ No

Did we grant expedited review? _____Yes ✓ No

Truthful and accurate statement enclosed? ✓ Yes _____No
(If Not Enclosed, Must Be A Refuse To Accept Letter)
Required For Originals Received 3/14/95 And After

Is the Indication for Use Form enclosed? ✓ YES _____No
(Required for Original 510(k)s received 1/1/96 and after -- must be submitted on a separate sheet of paper)

Without reviewing this 510(k), do you believe this device type may be a preamendments class III device? _____Yes_____No (IF YES, NOTIFY POS IMMEDIATELY IF THE OUTSIDE OF THE 510(k) HAS NOT BEEN STAMPED CLASS III SO THAT THE GMP INSPECTION CAN BE SCHEDULED AS SOON AS POSSIBLE). Class III devices can not receive a determination of substantial equivalence until the GMP inspection process has been completed.

Is this a file that was determined to be substantially equivalent by ODE, but placed on hold due to GMP violations and deleted after 12 months on hold? If so, a new ODE review is not required, please forward to POS.

_____Yes ✓ No

✓ Accepted _____ Refuse To Accept

8 39

I. CRITICAL ELEMENTS:	YES PRESENT OMISSION JUSTIFIED	NO INADEQUATE OMITTED
A. Is The Product A Device?	☑	☐
B. Is The Device Exempt From 510(k) By Regulation Or Policy?	☐	☑
C. Is Device Subject To Review By CDRH?	☑	☐
D. (i) Are You Aware That This Device Has Been The Subject Of A Previous NSE Decision?	☐	☑
(ii) If Yes, Does This New 510(k) Address The NSE Issue(s) (E.G., Performance Data)?	☐	☐
E. (i) Are You Aware Of The Submitter Being The Subject Of An Integrity Investigation? If Yes, Consult The ODE Integrity Officer.	☐	☑
(ii) Has The ODE Integrity Officer Given Permission To Proceed With The Review? (Blue Book Memo #I91-2 And Federal Register 90N-0332, September 10, 1991.)	☐	☐
F. Does The Submission Contain The Information Required Under Sections 510(k), 513(f), And 513(i) Of The Federal Food, Drug, and Cosmetic Act (Act) And Subpart E Of Part 807 In Title 21 Of The Code Of Federal Regulations?:	☐	☐
1. Device Trade Or Proprietary Name	☑	☐
2. Device Common Or Usual Name Or Classification Name	☑	☐
3. Establishment Registration Number (Only Applies If Establishment Is Registered)	☑	☐
4. Class Into Which The Device Is Classified Under (21 CFR Parts 862 to 892)	☑	☐
5. Classification Panel	☑	☐
6. Action Taken To Comply With Section 514 Of The Act	☐	☐
7. Proposed Labels, Labeling And Advertisements (If Available) That Describe The Device, Its Intended Use, And Directions For Use (Blue Book Memo #G91-1)	☑	☐

4D

8. A 510(k) Summary Of Safety And Effectiveness Or A 510(k) Statement That Safety And Effectiveness Information Will Be Made Available To Any Person Upon Request	☑	☐
9. For Class III Devices Only, A Class III Certification And A Class III Summary	☐ N/A	☐
10. Photographs Of The Device	☑	☐
11. Engineering Drawings For The Device With Dimensions And Tolerances	☑	☐
12. The Marketed Device(s) To Which Equivalence Is Claimed Including Labeling And Description Of The Device	☑	☐
13. Statement Of Similarities And/Or Differences With Marketed Device(s)	☑	☐
14. Data To Show Consequences And Effects Of A Modified Device(s)	☑	☐
15. Truthful And Accurate Statement	☑	☐
II. Additional Information That Is Necessary Under 21 CFR 807.87(h):	☐	☐
A. Submitter's Name And Address	☑	☐
B. Contact Person, Telephone Number And Fax Number	☑	☐
C. Representative/Consultant If Applicable	☐ N/A	☐
D. Table Of Contents With Pagination	☑	☐
E. Address Of Manufacturing Facility/Facilities And, If Appropriate, Sterilization Site(s)	☑	☐
III. Additional Information That May Be Necessary Under 21 CFR 807.87(h):	☐	☐
A. Comparison Table Of The New Device To The Marketed Device(s)	☑	☐
B. Action Taken To Comply With Voluntary Standards	☐	☐
C. Performance Data	☐	☐
MARKETED DEVICE:	☐	☐
Bench Testing	☐	☐
Animal Testing	☐	☐
Clinical Data	☐	☐
NEW DEVICE:	☐	☐
Bench Testing	☐	☐
Animal Testing	☐	☐

Clinical Data	☐	☐
D. Sterilization Information	☐ n/a	☐
Software Information	☑	☐
F. Hardware Information	☐ n/a	☐
G. If This 510(k) Is For A Kit, Has The Kit Certification Statement Been Provided?	☐	☐
H. Is This Device Subject To Issues That Have Been Addressed In Specific Guidance Document(s)?	☐	☐
If Yes, Continue Review With Checklist From Any Appropriate Guidance Documents.	☐	☐
If No, Is 510(k) Sufficiently Complete To Allow Substantive Review?	☑	☐
I. Other (Specify)	☐	☐

REVISED:3/14/95

THE 510(K) DOCUMENTATION FORMS ARE AVAILABLE ON THE LAN UNDER 510(K) BOILERPLATES TITLED "DOCUMENTATION" AND MUST BE FILLED OUT WITH EVERY FINAL DECISION (SE, NSE, NOT A DEVICE, ETC.).

"SUBSTANTIAL EQUIVALENCE" (SE) DECISION MAKING DOCUMENTATION

K_____

Reviewer: _____

Division/Branch: _____

Device Name: _____

Product To Which Compared (510(K) Number If Known): _____

	YES	NO	
1. Is Product A Device			If NO = Stop
2. Is Device Subject To 510(k)?			If NO = Stop
3. Same Indication Statement?			If YES = Go To 5
4. Do Differences Alter The Effect Or Raise New Issues of Safety Or Effectiveness?			If YES = Stop NE
5. Same Technological Characteristics?			If YES = Go To 7
6. Could The New Characteristics Affect Safety Or Effectiveness?			If YES = Go To 8
7. Descriptive Characteristics Precise Enough?			If NO = Go To 10 If YES = Stop SE
8. New Types Of Safety Or Effectiveness Questions?			If YES = Stop NE
9. Accepted Scientific Methods Exist?			If NO = Stop NE
10. Performance Data Available?			If NO = Request Data
11. Data Demonstrate Equivalence?			Final Decision:

Note: In addition to completing the form on the LAN, "yes" responses to questions 4, 6, 8, and 11, and every "no" response requires an explanation.

1 ✓

DEPARTMENT OF HEALTH AND HUMAN SERVICES

Public Health Service

Food and Drug Administration
Center for Devices and
Radiological Health
Office of Device Evaluation
Document Mail Center (HFZ-401)
9200 Corporate Blvd.
Rockville, Maryland 20850

April 18, 1997

CHIRON DIAGNOSTICS CORP.
63 NORTH ST.
MEDFIELD, MA 02052
ATTN: WILLIAM J. PIGNATO

510(k) Number: K971418
Received: 16-APR-97
Product: CHIRON DIAGNOSTICS AUTOMATED CHEMILUMINESCENCE SYSTEM (ASC) CENTAUR

The Center for Devices and Radiological Health (CDRH), Office of Device Evaluation (ODE), has received the Premarket Notification you submitted in accordance with Section 510(k) of the Federal Food, Drug, and Cosmetic Act (Act) for the above referenced product. We have assigned your submission a unique 510(k) number that is cited above. Please refer prominently to this 510(k) number in any future correspondence that relates to this submission. We will notify you when the processing of your premarket notification has been completed or if any additional information is required. YOU MAY NOT PLACE THIS DEVICE INTO COMMERCIAL DISTRIBUTION UNTIL YOU RECEIVE A LETTER FROM FDA ALLOWING YOU TO DO SO.

On January 1, 1996, FDA began requiring that all 510(k) submitters provide on a separate page and clearly marked "Indication For Use" the indication for use of their device. If you have not included this information on a separate page in your submission, please complete the attached and amend your 510(k) as soon as possible. Also if you have not included your 510(k) Summary or 510(k) Statement, or your Truthful and Accurate Statement, please do so as soon as possible. There may be other regulations or requirements affecting your device such as Postmarket Surveillance (Section 522 (a) (1) of the Act) and the Device Tracking regulation (21 CFR Part 821). Please contact the Division of Small Manufacturers Assistance at the number below for more information.

With regard to the Clinical Laboratory Improvement Amendments of 1988 (CLIA-88) which became effective September 1, 1992, the Center for Disease Control (CDC) and Prevention is currently handling complexity category/assignments concurrent with FDA's 510(k) review. To determine if your device requires a CLIA complexity categorization, contact CDC at (770)488-7655.

Please remember that all correspondence concerning your submission MUST be sent to the Document Mail Center (HFZ-401) at the above letterhead address. Correspondence sent to any address other than the Document Mail Center will not be considered as part of your official premarket notification submission. Because of equipment and personnel limitations, we cannot accept telefaxed material as part of your official premarket notification submission, unless specifically requested of you by an FDA official. Any telefaxed material must be followed by a hard copy to the Document Mail Center (HFZ-401).

13

You should be familiar with the manual entitled, "Premarket Notification 510(k) Regulatory Requirements for Medical Devices" available from DSMA. If you have other procedural or policy questions, or want information on how to check on the status of your submission (after 90 days from the receipt date), please contact DSMA at (301) 443-6597 or its toll-free number (800) 638-2041, or at their Internet address http://www.fda.gov/cdrh/dsmamain.html or me at (301) 594-1190.

Sincerely yours,

Marjorie Shulman
Consumer Safety Officer
Premarket Notification Staff

K971418

Chiron Diagnostics Corporation
63 North Street
Medfield, Massachusetts 02052-1688
508.359.7711 Fax 508.359.3599

CHIRON | DIAGNOSTICS

April 14, 1997

RECEIVED
16 APR 97 13 12
FDA/CDRH/ODE/DMC

U.S. Food and Drug Administration
Center for Devices and Radiological Health
Office of Device and Evaluation
Document Mail Center (HFZ-401)
9200 Corporate Blvd.
Rockville, MD 20850

Re: Premarket Notification - 510(k)
Automated Chemiluminesence System (ACS) Centaur Analyzer

Pursuant to Section 510(k) of the Food, Drug, and Cosmetic Act and in accordance with 21 CFR 807.87, enclosed in duplicate is the Premarket Notification for the Chiron Diagnostics Automated Chemiluminescence System (ACS) Centaur Analyzer

The intended use of ACS:Centaur Analyzer is a stand-alone continuous operation immunochemistry analyzer intended to be used with a variety of dedicated immunodiagnostic assays currently approved for use on the ACS: 180® Analyzer.

The device is a subsequent generation of and substantially equivalent to the Chiron Diagnostics ACS: 180® Analyzer D.C.(#K902336).

In accordance with 21 CFR 807.87(j), Chiron Diagnostics Corporation makes the following Premarket Notification Truthful and Accurate Statement:

> I certify that, in my capacity as Director of Regulatory Affairs for Chiron Diagnostics Corporation, I believe to the best of my knowledge, that all data and information submitted in the Premarket Notification are truthful and accurate and that no applicable material fact has been omitted.

In accordance with 21 CFR 807.95(b)(i), Chiron Diagnostics Corporation requests that the Food and Drug Administration hold as confidential information the company's intent to market this device until commercial distribution has begun.

Sincerely,

William J. Pignato
Director of Regulatory Affairs
(508) 359-3825
(508) 359-3885

Enclosure

c/g: 510k/cent510.doc

TX
I

Premarket Notification - 510(k)

Chiron Diagnostics ACS:Centaur Analyzer

In accordance with 21 CFR 807.87(a-h), the following information is provided:

a) **Device Name**: Chiron Diagnostics Automated Chemiluminescence System (ACS) Centaur Analyzer

b) **Establishment Registration Number**: 1519113.

c) **Classification**:

This device is a Class I device and classified under 21 CFR 862.2160

d) **Performance Standard**: None established under Section 514.

e) **Labeling**: Included with this notification are the following:

ACS:Centaur Reference Manual (Section 1-9 and Appendices A-I)
On-Board System Reagent Labeling (Section 14)

f) **Substantial Equivalence**:

This product is substantially equivalent to the currently marketed Chiron Diagnostics ACS:180 analyzer. The assays currently approved for use with the ACS:180® will also be used on the ACS:Centaur. A comparison of features of the ACS:180® vs. the ACS:Centaur are presented in Section 12

g) **Significant Change or Modification**: Not applicable

h) **Additional Information**:

N/A

ACS:CENTAUR PREMARKET NOTIFICATION

TABLE OF CONTENTS

Section	Information	
I	**ACS:CENTAUR REFERENCE MANUAL**	
	Using the Manual	
Section I	System Priniples	
Section 2	System Overview	
Section 3	Workstation	
Section 4	Operating the System	
Section 5	Calibration	
Section 6	Quality Control	
Section 7	Maintenance	
Section 8	Troubleshooting	
Section 9	Setup	
Section 10	**Appendices**	
	Section A	Protection Yourself from Biohazards
	Section B	Service and Supplies
	Section C	Preinstallation and Site Requirements
	Section D	Installing and Relocating
	Section E	Reagent and Water Quality
	Section F	Specifications
	Section G	System Symbols
	Section H	References
	Section I	Glossary

17 48

Additional Information

Section 11	Summary of Safety and Effectiveness
Section 12	Comparison of ACS:Centaur vs. ACS:180®
Section 13	ACS: Centaur Software Development Process
Section 14	Labeling for System Fluids
Section 15	Indication for Use Statement

ACS:Centaur™

Reference Manual

Automated Chemiluminescence System

CHIRON | DIAGNOSTICS

Copyright 1997. Chiron Diagnostics Corporation. All rights reserved.

Printed on recycled paper

Preliminary 4/1/97 For Investigational Use Only

19

30

All Rights Reserved

This manual is copyrighted, and all rights are reserved. No part of this manual or the products it describes may be reproduced by any means or in any form without prior consent in writing from Chiron Diagnostics Corporation.

ACS:Centaur is a trademark of Chiron Diagnostics Corporation, East Walpole, MA.

Magic is a registered trademark of Chiron Diagnostics Corporation, East Walpole, MA.

GlidePoint is a registered trademark of Cirque Corporation, Salt Lake City, Utah.

Patents Pending.

Printed in U.S.A.

The information in this manual was correct at the time of printing. However, Chiron Diagnostics Corporation continues to improve products and reserves the right to change specifications, equipment, and maintenance procedures at any time without notice.

Contents

Using This Manual vii

Conventions ix

Special Terminology x

1 System Principles 1-1

Intended Use 1-3

Features 1-4

Technology 1-5

Direct Chemiluminescence 1-5

Antibody Binding Principles 1-6

Paramagnetic Particles and Magnetic Separation 1-7

Assay Reaction Formats 1-8

Sandwich Format 1-8

Competitive Format 1-10

Antibody Capture Format 1-13

Assay Protocols 1-16

Questions and Answers 1-17

2 System Overview 2-1

Introduction 2-3

Sample Loading Area 2-5

Reagent Loading 2-8

Primary Packs 2-8

Primary Reagent Compartment 2-9

Ancillary Packs 2-10

Ancillary Reagent Queue 2-10

21 B37

Supplies and Wastes 2-11

Test Sequence 2-12
Cuvette Loading 2-13
Incubation Ring 2-14
Sample Probe 2-15
Ancillary Probe 2-16
Reagent Probes 2-17
Aspirate Probes, Wash Stations, and Acid Probe 2-18
Elevator, Luminometer, and Base Probe 2-19

Questions and Answers 2-20

3 Workstation 3-1

Workstation Components 3-3

Workspace 3-6
Status Buttons 3-7
Task Buttons 3-8
Function Buttons 3-8

Window Components 3-9
Window Structure 3-9
Window Elements 3-9
Interacting with the Windows 3-11

Online Information 3-12
Windows 3-12
Fields and Buttons 3-12
Maintenance Activities 3-12
Event Codes 3-12

4 Operating the System 4-1

Introduction 4-3
Manually Entering Requests at a Stand-alone System 4-3

Manually Receiving Requests from the LIS 4-4
LIS Integrated with Dynamic Download 4-5
LIS Integrated with Host Query 4-7

Loading Sample Racks 4-9
Loading Stat Samples 4-10

Replenishing Reagents 4-12
Reviewing Reagent Inventory 4-12
Reviewing Reagent Status 4-12
Reviewing Primary Reagent Status 4-13
Adding Primary Reagent Packs 4-14
Reviewing Ancillary Reagent Status 4-14
Adding Ancillary Reagent Packs 4-15

Replenishing Supplies 4-16
Reviewing Supplies Status 4-16
Preparing the Water and Waste Bottles 4-17
Adding Cuvettes 4-19
Adding Sample Tips 4-20
Emptying the Waste Bins 4-21
Replacing the System Fluids 4-24

Reviewing Inprocess Samples 4-26

Modifying the Worklist 4-28
Reviewing the Worklist Summary 4-28
Querying an LIS 4-29
Adding Patient Requests 4-29
Entering Patient Demographics 4-30
Adding Stat Requests 4-31
Adding Batch Requests 4-31
Adding Calibrator Requests 4-32
Adding Control Requests 4-33
Entering Dilution Options 4-34
Entering Reagent Options 4-35
Editing Requests 4-36

23 54

Editing Batch Requests 4-36
Deleting Requests 4-37

Evaluating the Results 4-38
Reviewing Results 4-38
Repeating a Test 4-39
Editing Results 4-39
Sending Results to an LIS 4-40
Printing Sample Results 4-40
Deleting Selected Sample Results 4-41
Deleting Worklist Results 4-42

Maintaining Data Files 4-43
Archiving Results 4-43
Restoring Archived Results 4-44

5 Calibration 5-1

Quantitative Assays 5-3
Principle 5-3
Establishing a Master Curve 5-3
Two-Point Calibration 5-5
Calibration Evaluation Ranges 5-6
Reference Serum Calibration for T Uptake 5-8

Qualitative Assays 5-9
Principle 5-9
Calculating a Cutoff Point 5-9
Establishing a Master Curve 5-10
Calculating the Result 5-11

Defining Calibration 5-12
Defining a Master Curve 5-12
Defining Calibrator Assigned Values 5-13

Performing Calibrations 5-15
Verifying Calibration Status and Due Dates 5-15

Scheduling Calibrators 5-16
Reviewing Calibration Data 5-17
Reviewing Historical Calibration Data 5-18
Excluding a Calibration Result 5-19
Waiving an Expired Calibration 5-20
Accepting an Invalid Calibration 5-20
Printing Calibration Data 5-20

6 Quality Control 6-1

Principles 6-3
Definitions 6-3
Interpretation of Control Data 6-4
QC Principles for Quantitative Assays 6-5
QC Principles for Qualitative Assays 6-6

Defining QC 6-7
Adding a Control 6-7
Editing a QC Definition 6-8
Deleting a Control or a Test 6-8
Printing a QC Definition 6-9

Performing QC 6-10
Scheduling Controls 6-10
Autoscheduling Controls 6-11
Reviewing QC Data 6-11
Editing QC Data Points and Statistics 6-14
Printing QC Reports 6-15

7 Maintenance 7-1

Accessing Maintenance Information 7-3
Using the Maintenance Schedule 7-3
Using the Maintenance Log 7-3
Accessing Online Maintenance Procedures 7-4
Printing the Maintenance Schedule 7-4

Daily Maintenance 7-5
Daily Cleaning Procedure 7-5
Replacing the Water Bottle 7-5

Weekly Maintenance 7-6
Cleaning the Water Bottle and Water Reservoir 7-6
Cleaning the Sample Tip Waste Area 7-9

Monthly Maintenance 7-13
Performing the Monthly Cleaning Procedure 7-13
Cleaning the Reagent Probes 7-15
Cleaning the Ancillary Probe 7-17
Cleaning the Aspirate Probes 7-18
Cleaning the Cuvette Waste Area 7-19
Cleaning the Air Filter 7-24

As-Needed Maintenance 7-27
Replacing the Cleaning Solution 7-27
Cleaning the Probe Rinse Stations 7-28
Cleaning the Reagent Probe Shutter 7-29
Cleaning the Primary Reagent Compartment and Reagent Slides 7-30
Cleaning the Covers and Pointing Device 7-31
Cleaning the Sample Racks 7-31

8 Troubleshooting **8-1**

Investigating System Problems 8-3

Solving Event Codes 8-4

9 Setup **9-1**

Defining Test Options 9-3
Modifying Test Definitions 9-3
Modifying Reference Ranges 9-4
Defining Test Profiles 9-5
Defining Ratio Tests for Calculated Parameters 9-6

Defining Off-System Tests 9-7

Selecting Sample Handling Options 9-8
Selecting Sample Identification 9-8
Selecting Sample Aspirations 9-8
Selecting Sample Tube Types 9-8
Defining Repeats 9-9

Adjusting the Time 9-10

Defining Printing Options 9-11
Selecting a Printer 9-11
Selecting Paper Size 9-11
Entering a Report Header 9-12

Defining System Passwords 9-13

Defining Sample Barcode Options 9-14
Selecting the Barcode Symbology and Format 9-14
Defining Custom Barcode Labels 9-14

Defining LIS Communication Options 9-16

Appendix A: Protecting Yourself from Biohazards A-1

Appendix B: Services and Supplies B-1
Addresses and Communication Numbers B-1
Standard Instrument Warranty and Service Delivery Policy B-3
Supplies and Accessories B-6

Appendix C: Preinstallation Site Requirements C-1
Instrument C-1
Water Supply C-1
Drainage System C-2
Delivery C-2
Communications C-2
Environment C-2

Appendix D: Installing and Relocating D-1

Appendix E: Reagents and Water Quality E-1

System Reagents E-1

Reagent Water Quality E-1

Appendix F: Specifications F-1

Dimensions F-1

Microprocessor (CPU) Specifications F-1

Printer Specifications F-2

Environmental Specifications F-2

Outputs F-2

Luminometer Specifications F-2

Electrical Ratings and Power Requirements F-3

Primary Sample Tube Specifications F-3

Sample Transfer Cups and Tubes Specifications F-4

Microsample Containers Specifications F-4

Appendix G: System Symbols G-1

Appendix H: References H-1

Using This Manual

The *ACS:Centaur Reference Manual* provides clinical laboratory professionals with information about operating the ACS:Centaur system:

- ACS:Centaur system operators, who perform daily operating tasks such as preparing the system to run samples, scheduling and running samples, reviewing results, performing maintenance, and correcting system problems
- ACS:Centaur system key operators, who perform daily and other operating tasks such as reviewing control data, managing data files, and modifying system parameters

If you want to . . .	*Then refer to . . .*
learn about features such as continuous operation, dilutions, or reagent inventory	Section 1, *System Principles.*
review principles of chemiluminescence and assay reaction	
review the hardware and the operating sequence	Section 2, *System Overview.*
learn about the user interface components and windows	Section 3, *Workstation.*
prepare the system	Section 4, *Operating the System.*
schedule the worklist	
analyze the samples	
manage sample results and data files	
review Master Curve and two-point calibration principles	Section 5, *Calibration.*
define calibration information	
define multiple Master Curves	
view quality control statistics	Section 6, *Quality Control.*
view Levey-Jennings charts	
view monthly summaries	
perform scheduled maintenance activities	Section 7, *Maintenance.*
record maintenance activities	

If you want to . . .	*Then refer to . . .*
investigate and correct system problems	Section 8, *Troubleshooting*.
modify test definition parameters	Section 9, *Setup*.
modify system parameters	
review additional information such as the glossary, supplies list, or the index	Appendixes.

30 101

Conventions

Several conventions are used throughout the *ACS:Centaur Reference Manual.* The following table explains the meaning of the conventions.

This convention . . .	*Indicates . . .*
BIOHAZARD:	a potentially biohazardous condition.
WARNING	a condition that may cause personal injury.
CAUTION:	a condition that may cause product damage or loss of data. On the system, this symbol indicates that you should refer to the manuals for more information.
NOTE:	information that requires your attention.
Bold	an element on the user interface. When the word "save" appears as **Save**, it refers to the **Save** button on the window.
Procedure	procedural information for maintenance tasks and for event codes accessible on the system.
?	information accessible on the system by using the **?** key on the keyboard or the **?** button in the pointing device. Online information can include information about specific entry fields, buttons, and tables or information about how to use a window.

Special Terminology

Some special terminology is used throughout the *ACS:Centaur Reference Manual*. The following table explains the meaning of the terms and the specific actions that you need to take when you see the term.

Term	Definition
Select	When a procedure instructs you to select, move the pointer to the appropriate item and then press the GlidePoint button.
Deselect	When a procedure instructs you to deselect, move the pointer to the appropriate item and then press the GlidePoint button.
Enter	When a procedure instructs you to enter information, type the specified information using the keyboard and then press Enter to store the information.
Scan	When a procedure instructs you to scan a barcode, pass the barcode scanner over the specified barcode to enter the required information.
Highlighted	When a procedure describes a highlighted item, it refers to the appearance of that item on the workspace. When you move the pointer to a line in a table or a field at a window and press the GlidePoint button, the background of the line or field changes colors. This is referred to as highlighting.
Focus	You get focus any time you select an item. When an item has focus, it has a black frame around it.

3V 163

1 System Principles

Intended Use 1-3

Features 1-4

Technology 1-5

Direct Chemiluminescence 1-5

Antibody Binding Principles 1-6

Paramagnetic Particles and Magnetic Separation 1-7

Assay Reaction Formats 1-8

Sandwich Format 1-8

Competitive Format 1-10

AE-Labeled Antigen 1-10

AE-Labeled Antibody 1-12

Antibody Capture Format 1-13

Assay Protocols 1-16

34 101

Intended Use

The ACS:Centaur system is a stand-alone, continuous operation, immunochemistry analyzer. The ACS:Centaur system performs immunochemical assays on clinical specimens. The system menu includes endocrine, anemia, reproductive, cancer, cardiac, therapeutic drug, and infectious disease assays. All assays use direct chemiluminescent technology.

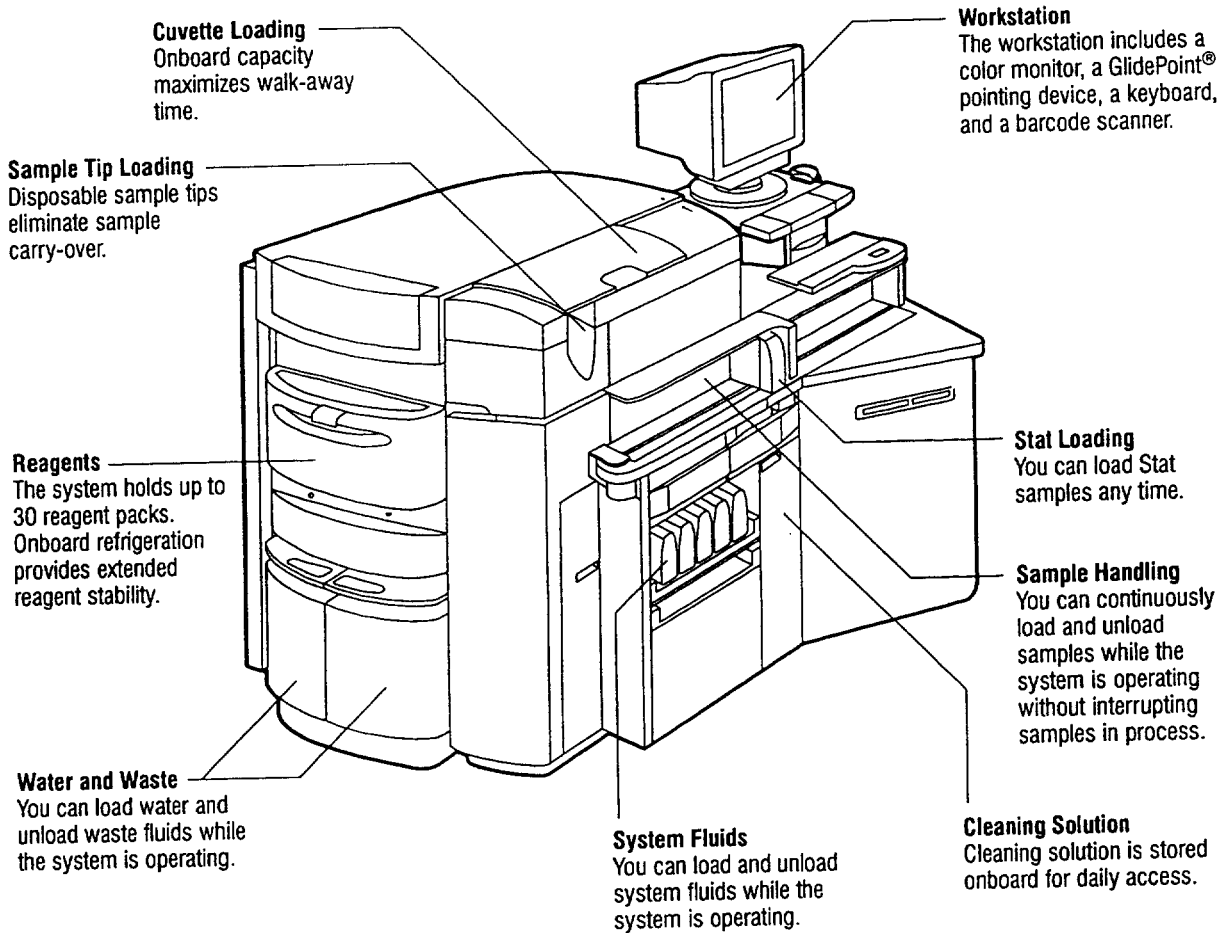

3r

Features

Feature	Description
Continuous Operation and Access	The system has random access and Stat mode capabilities. You can load samples, reagents, and supplies at any time.
High Throughput	The throughput is up to 240 tests per hour (excluding time to the first result).
Multiple Protocols	The flexible incubation capabilities allow multiple protocols. The system runs a broad range of tests, allowing you to consolidate workstations.
Sample Management	The system performs automatic dilutions, schedules reflex tests, and manages quality control data.
Sample Integrity	The system has a clot alert detection, management, and recovery feature, which detects complete obstructions in the sample probe and notifies the operator of the error condition.
System Management	Continuous monitoring of system, sample, and reagent status minimizes hands-on operator time at the system.
Refrigeration	Reagents remain in the refrigerated reagent areas, so the system is always ready.
Barcode Scanners	Barcode scanners eliminate or minimize the need for keyboard entry of information.
Sample Containers	The system accommodates sample cups, micro-containers, and a wide range of tube sizes.
Multiple Master Curves	The system can store up to 250 Master Curves for all assays to allow efficient transition from one lot of reagent to another.
LIS Interface	Bidirectional laboratory information system (LIS) interfaces allow you to send and receive information to your LIS. The system supports ASTM and Japanese interface protocols.
Online Information	Immediate operator help can be accessed for any window or field. You can also access online procedures for maintenance and event codes.
Modem	System data can be remotely accessed by Chiron Diagnostics to provide immediate technical assistance specifically for your system.

Technology

Direct Chemiluminescence

Chemiluminescence is a chemical reaction that emits energy in the form of light. (1–5) When used in combination with immunoassay technology, the light produced by the reaction indicates the amount of analyte in a sample.

Direct chemiluminescence reactions directly measure the light energy without the use of added steps or amplifying molecules. (6 p. 337) The ACS:Centaur assays use acridinium ester (AE) as the chemiluminescent label. AE compounds do not require the addition of a catalyst or substrate and therefore provide a direct chemiluminescent technology. (6 p. 341–343) Direct chemiluminescence using AE is highly automatable and provides many benefits over other methods. (7 94)

The ACS:Centaur assays use the dimethyl form of AE because its stability allows long reagent shelf lives. (6 p.343; 8)

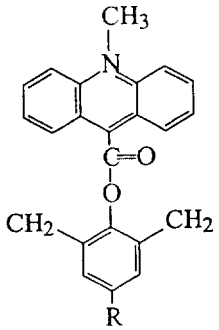

Dimethylacridinium Ester

In ACS:Centaur assays, AE is oxidized by hydrogen peroxide and the light emission is maximized by changing the environment from acidic to basic. Oxidation of AE occurs rapidly, with peak light emission occurring within one second. ACS:Centaur assays are designed to make the best use of the fast reaction time.

AE releases an intense, one-second burst of photons, which is a faster and more sensitive method than RIA or EIA methods. (6/345; 8)

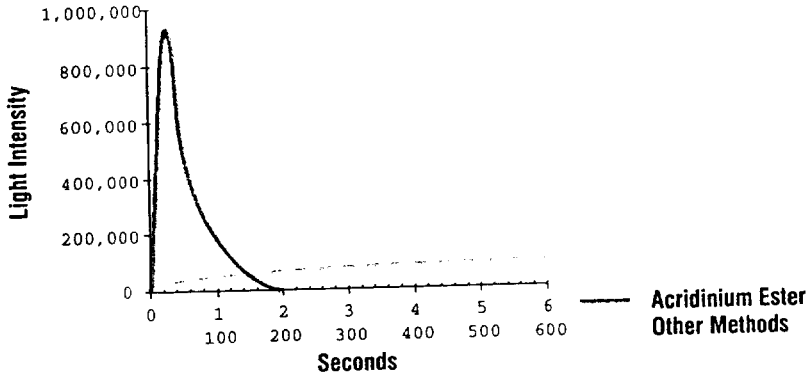

The AE molecule is much smaller than the alkaline phosphatase molecule used in EIA assays. This smaller size decreases blockage of binding sites, increases diffusion rates, and increases the assay sensitivity. (9)

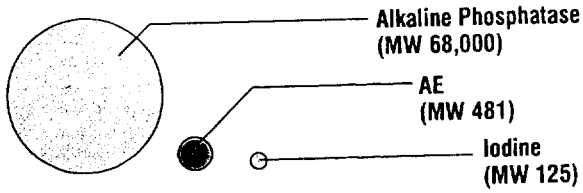

[Use spheres to denote relative sizes, not circles; or recalculate relative sizes w/ area]

Antibody Binding Principles

Antibodies are proteins that are produced by the immune system in response to a foreign substance (antigen). (T5) Antibodies specifically bind to the antigen that caused their production.

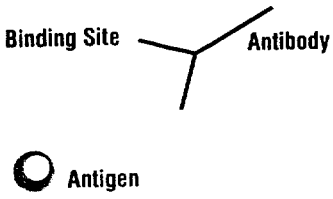

Antibodies are ideal for use in immunoassays because they can be produced to bind to a specific analyte. In immunoassays, antibodies bind to the analyte that is being measured.

A substance such as AE can be covalently bound to an antibody without altering its ability to bind to an antigen. To measure an analyte, some ACS:Centaur assays use antibodies that are covalently bound to AE.

Paramagnetic Particles and Magnetic Separation

Paramagnetic particles (PMP) are iron oxide crystals that are attracted to a magnetic field. (7) The ACS:Centaur assays use PMP coated with antibody or antigen, which is called the Solid Phase. (7) When the reaction mixture is exposed to a magnetic field, the PMP is drawn toward the magnets. While the magnets hold the PMP in place, materials not bound to the PMP are washed away.

The PMP provides approximately 50 times the reactive surface area of coated tubes or beads.(6) As a result, ACS:Centaur assays bind the analyte quickly and efficiently.

Assay Reaction Formats

The ACS:Centaur system directly measures the amount of light that the chemiluminescent reaction emits. ACS:Centaur assays use AE as the label in Lite Reagent and PMP as the Solid Phase. The system uses a variety of formats to detect antigens as well as antibodies. For more information about the reaction formats and principles for specific assays, refer to the product inserts.

The ACS:Centaur system applies the immunoassay binding principles of antibodies using different formats:

- sandwich format
- competitive format
- antibody capture format

Sandwich Format

Sandwich binding formats can use AE-labeled antibody or AE-labeled antigen. The sandwich format explained in this section uses AE-labeled antibody.

1. AE-labeled antibody is added to the sample. The AE-labeled antibody binds specifically to the sample antigen, which is being measured.

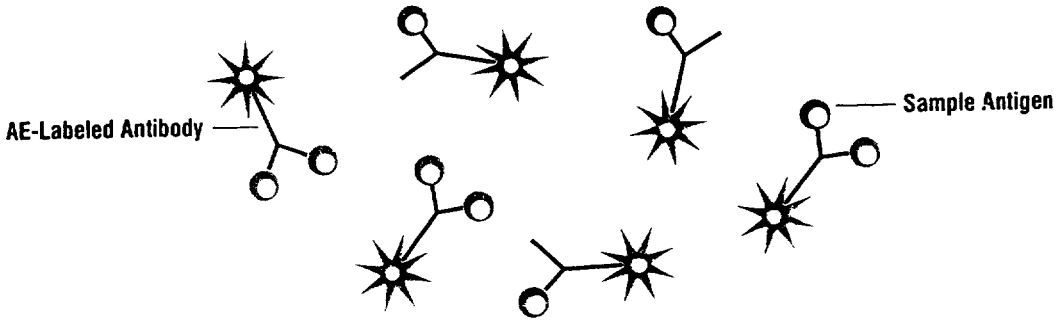

40

2. The PMP, which is covalently bound to antibody specific for the sample antigen, is added. The reaction mixture is incubated at 37°C. The PMP binds with the sample antigens bound to AE-labeled antibody.

[Add AE–antigen molecules to demonstrate what's happening in last sentence above]

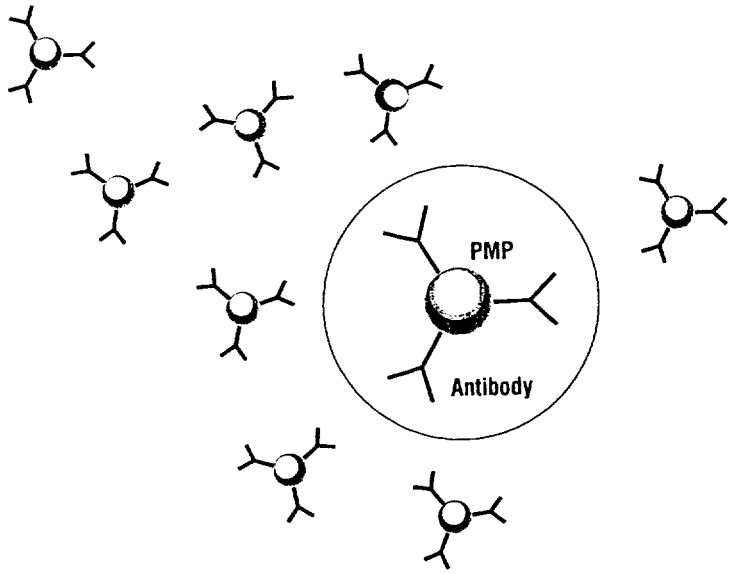

3. The reaction mixture is exposed to a magnetic field, which draws the PMP toward the magnets. While the magnets hold the PMP in place, everything not bound to the PMP is washed away. The cuvette now contains sample antigen bound to AE, which is bound to the PMP by the antibody.

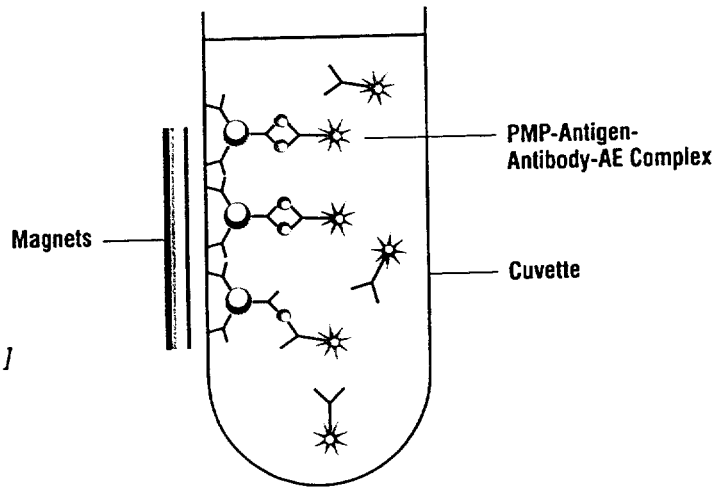

[Add info]

4. Acid and base are added to initiate the chemiluminescent reaction. The emission of photons is measured in relative light units (RLUs). Once the light produced from the oxidation of the AE is quantitated, the system calculates the concentration of the analyte.

   In a sandwich binding format, the sample concentration and the light emission have a direct relationship. The more sample antigen molecules that are present, the more AE that is present, and therefore the higher the light emission.

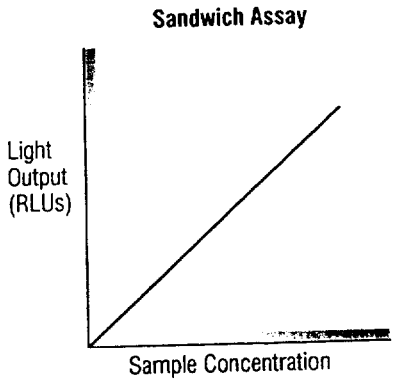

Competitive Format

Competitive binding formats include:

- AE-labeled antigen
- AE-labeled antibody

AE-Labeled Antigen

1. AE-labeled antigen and antibody-labeled PMP are added to the sample. The reaction mixture is incubated at 37°C. The AE-labeled antigen competes with sample antigen for limited binding sites on the antibody, which is covalently bound to PMP.

   The more sample antigen that is present, the less AE-labeled antigen that is bound. Alternatively, the less sample antigen that is present, the more AE-labeled antigen that is bound.

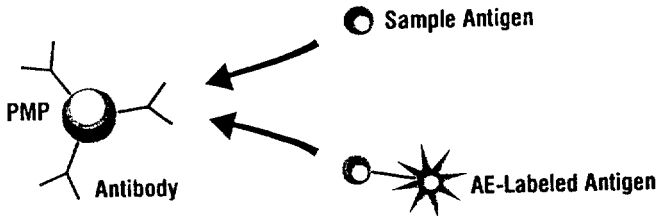

2. The reaction mixture is exposed to a magnetic field, which draws the PMP toward the magnets. While the magnets hold the PMP in place, everything not bound to the PMP is washed away. The cuvette now contains sample antigen and AE antigen bound to the PMP by the antibody.

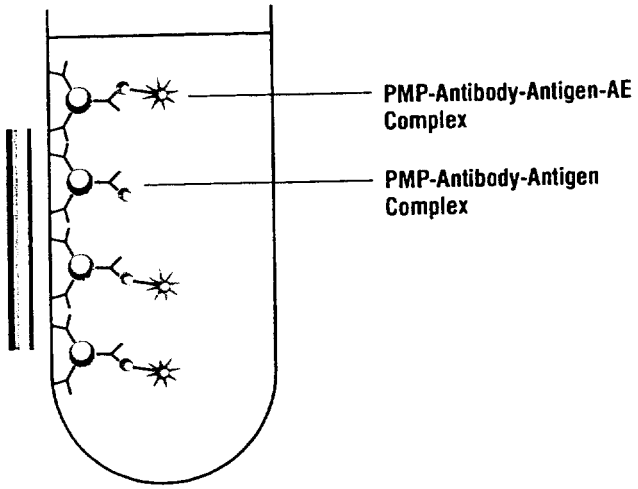

3. Acid and base are added to initiate the chemiluminescent reaction. The emission of photons is measured in RLUs. Once the light produced from the oxidation of the AE is quantitated, the system can calculate the concentration of the analyte.

   If the sample has a low concentration of antigen, most of the binding sites on the antibody are bound by AE-labeled antigen. This results in a high reading of RLUs from the oxidation of the AE.

   If the sample has a high concentration of antigen, most of the binding sites on the antibody are bound with sample antigen and few sites are bound with AE-labeled antigen. This results in a low reading of RLUs from the oxidation of the AE.

   In a competitive assay, the sample concentration and the light emission in RLUs have an inverse relationship.

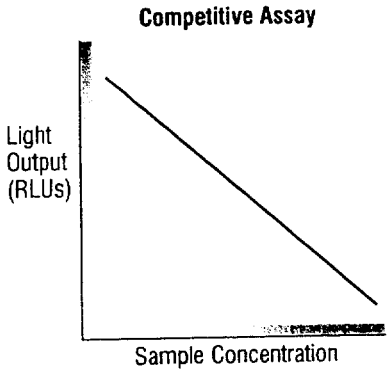

43

AE-Labeled Antibody

1. AE-labeled antibody and antigen-labeled PMP are added to the sample. The reaction mixture is incubated at 37°C. Antigen bound to PMP competes with sample antigen for limited binding sites on the AE-labeled antibody.

   The more sample antigen that is present, the less PMP-labeled antigen that is bound. Alternatively, the less sample antigen that is present, the more PMP-labeled antigen that is bound.

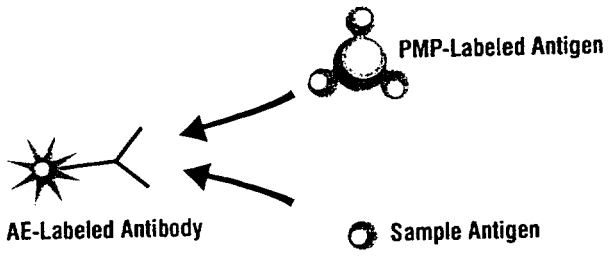

2. The reaction mixture is exposed to a magnetic field, which draws the PMP toward the magnets. While the magnets hold the PMP in place, everything not bound to the PMP is washed away.

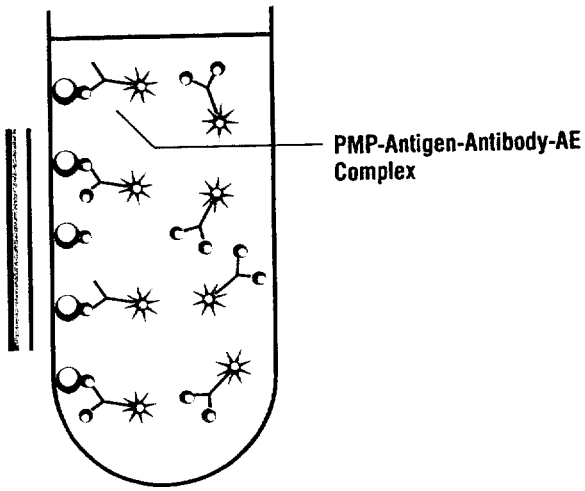

3. Acid and base are added to initiate the chemiluminescent reaction. The emission of photons is measured in RLUs. Once the light produced from the oxidation of the AE is quantitated, the system calculates the concentration of the analyte.

   If the sample has a low concentration of antigen, most of the binding sites on the antibody are bound by PMP-labeled antigen. This results in a high reading of RLUs from the oxidation of the AE.

44

If the sample has a high concentration of antigen, most of the binding sites on the antibody are bound with sample antigen and few sites are bound with PMP-labeled antigen. This results in a low reading of RLUs from the oxidation of the AE.

In a competitive assay, the sample concentration and the light emission in RLUs have an inverse relationship.

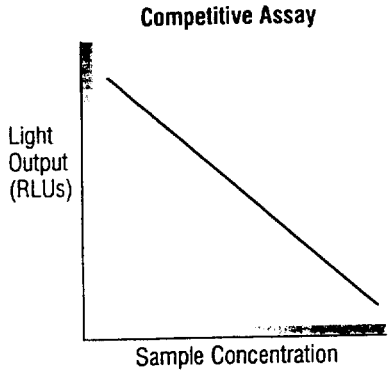

Antibody Capture Format

The antibody capture format is used when the analyte being measured is an antibody. In these assays, the sample antibody is the analyte in the reaction mixture. The reaction mixture contains a different antibody that is specifically directed against the antibody in the sample.

Antibody capture formats are characterized by two cycles of incubation and wash. The purpose of the first incubation/wash is to remove excess interfering substances in the sample.

The following example is an antibody capture assay that detects human IgM antibody in a patient sample.

1. Anti-human IgM antibody bound to PMP is added to the sample. The reaction mixture is incubated at 37°C. The human IgM antibody in the sample binds to the anti-human IgM antibody that is covalently bound to PMP.

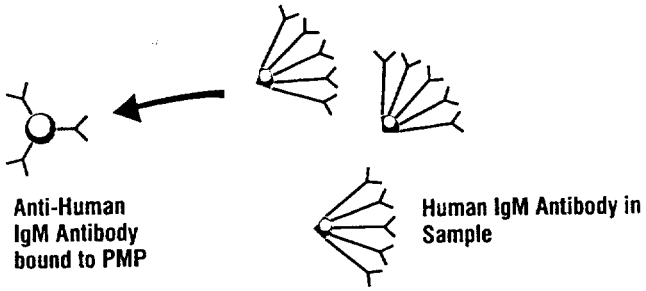

2. The reaction mixture is exposed to a magnetic field, which draws the PMP toward the magnets. While the magnets hold the PMP in place, everything not bound to the PMP is washed away. The cuvette now contains human IgM antibody captured by specific anti-human IgM antibody, which is bound to PMP.

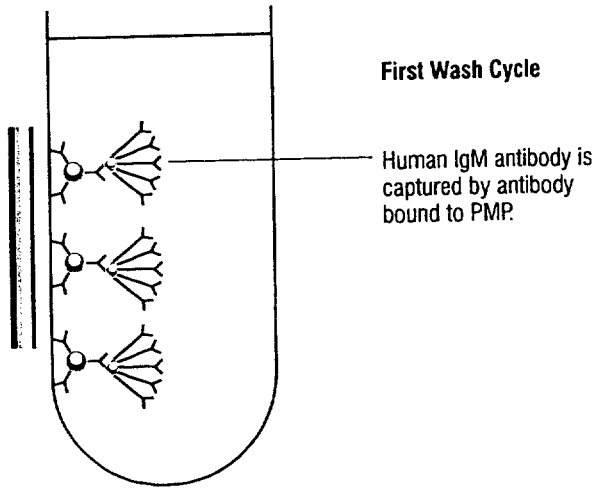

3. AE-labeled antigen is added. The reaction mixture is incubated at 37°C. The AE-labeled antigen has an affinity for the sample antibody.

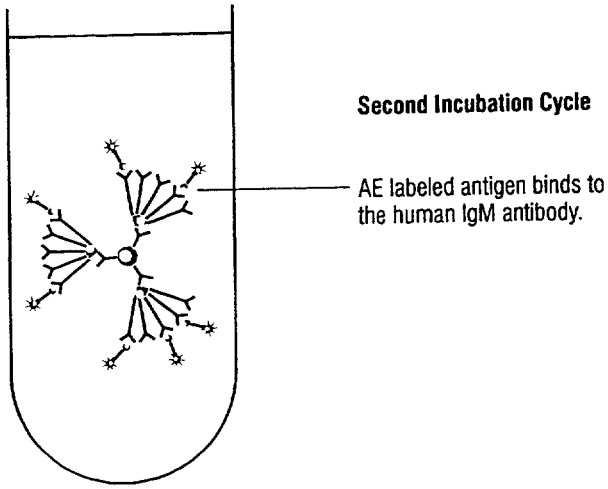

4. The reaction mixture is again exposed to a magnetic field, which draws the PMP toward the magnets. While the magnets hold the PMP in place, everything not bound to the PMP is washed away. The cuvette now contains AE-labeled antigen, bound to human IgM antibody, bound to PMP.

5. Acid and base are added to initiate the chemiluminescent reaction. The emission of photons is measured in RLUs. Once the light produced from the oxidation of the AE is quantitated, the system calculates the concentration of the analyte.

   The sample concentration and the light emission have a direct relationship in this example of an antibody capture format. The more sample antibody that is present, the more AE that is present, and therefore the higher the light emission.

Antibody Capture Format

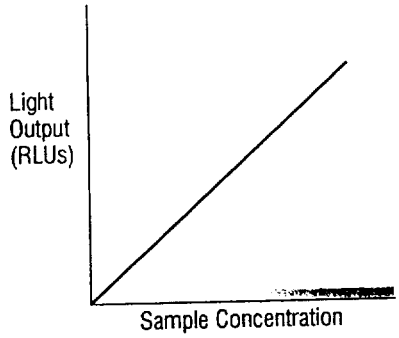

47

98

Assay Protocols

One-step and extended one-step protocols include one wash after the incubation, or one incubation/wash cycle. Two-step protocols include two incubation/wash cycles.

One-step

- Sample dispensed
- Diluent or pretreatment added
- Lite Reagent added
- Solid Phase added
- Incubate 8 min.
- Magnetic separation
- Wash
- Acid added
- Base added

Extended One-step

- Sample dispensed
- Diluent or pretreatment added
- Lite Reagent added
- Solid Phase added
- Incubate 18 min.
- Magnetic separation
- Wash
- Acid added
- Base added

Two-step

- Sample dispensed
- Diluent or pretreatment added
- Solid Phase added
- Incubate 18 min.
- Magnetic separation
- Wash
- Lite Reagent added
- Incubate 18 min
- Magnetic separation
- Wash
- Acid added
- Base added

2 System Overview

Introduction 2-3

Sample Loading Area 2-5

Reagent Loading 2-8
Primary Packs 2-8
Primary Reagent Compartment 2-9
Ancillary Packs 2-10
Ancillary Reagent Queue 2-10

Supplies and Wastes 2-11

Test Sequence 2-12
Cuvette Loading 2-13
Incubation Ring 2-14
Sample Probe 2-15
Ancillary Probe 2-16
Reagent Probes 2-17
Aspirate Probes, Wash Stations, and Acid Probe 2-18
Elevator, Luminometer, and Base Probe 2-19

Introduction

This section introduces the operating sequence of the system and describes the location and function of the major subsystems and components in order to:

- keep the ACS:Centaur operating continuously for maximum efficiency
- perform the maintenance tasks
- understand the basic test processing sequence, which is essential for effective troubleshooting

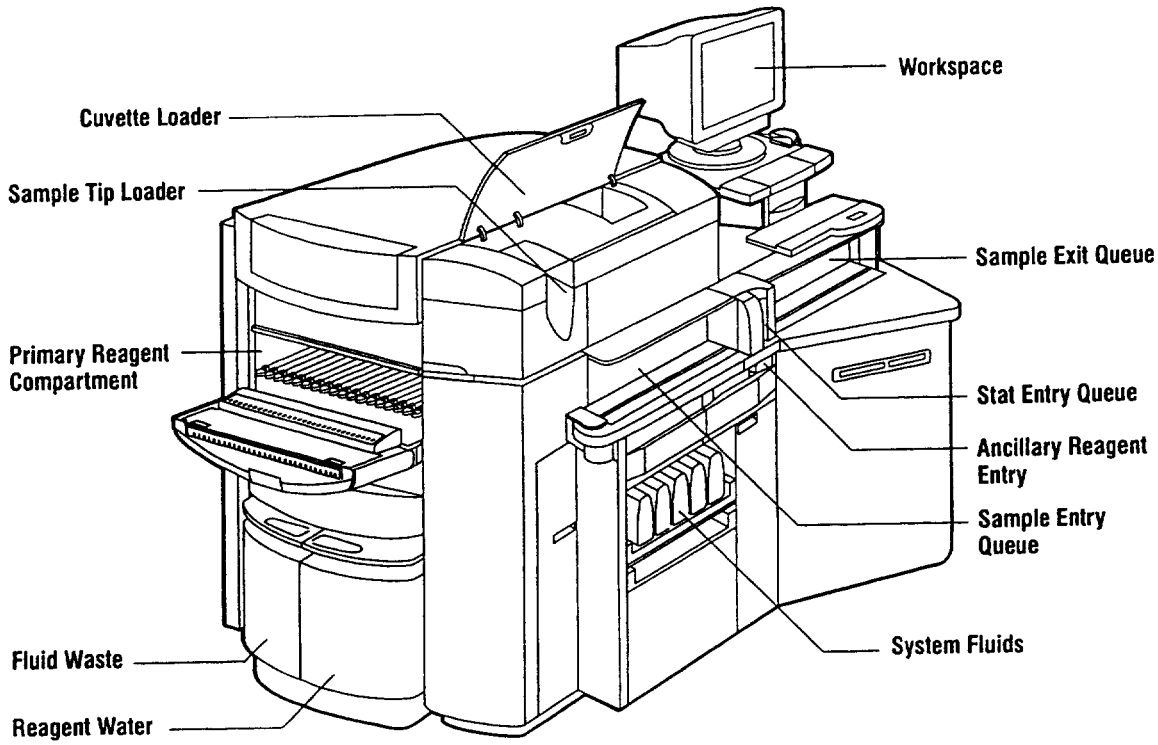

Operation of the ACS:Centaur system includes the following areas:

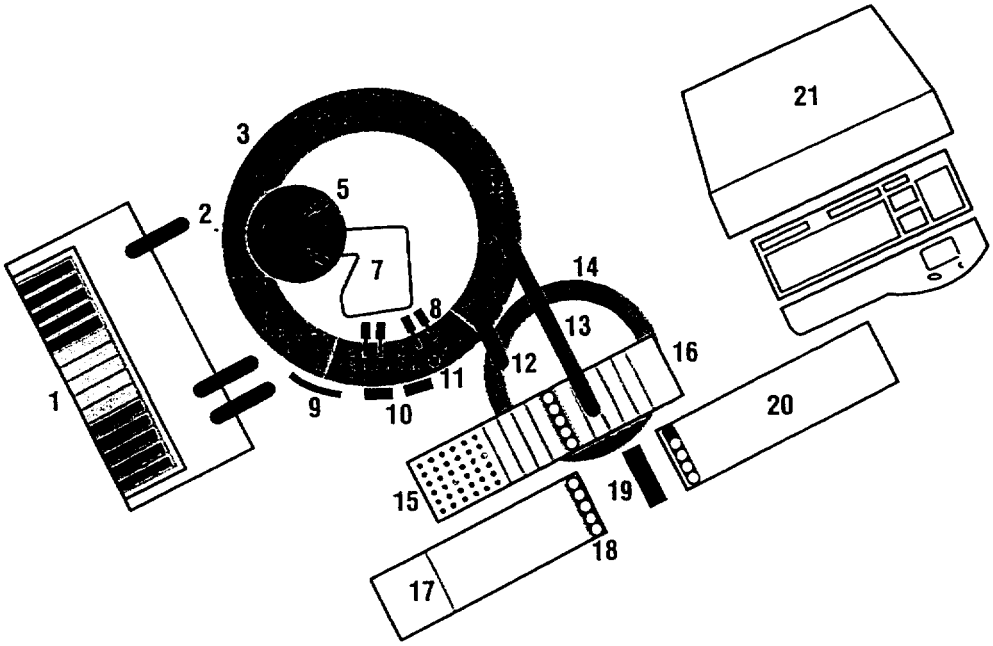

1 Primary Reagent Compartment
2 Primary Reagent Probes
3 Incubation Ring
4 Luminometer
5 Waste Probe
6 Base Probe
7 Cuvette Loading Bin
8 Aspirate Probes
9 Magnets
10 Wash Block
11 Acid Probe
12 Ancillary Probe
13 Sample Probe
14 Ancillary Queue
15 Sample Tip Tray
16 Inprocess Queue
17 Sample Entry Queue
18 Sample Rack
19 Stat Entry
20 Sample Exit Queue
21 Workstation

51 80

Sample Loading Area

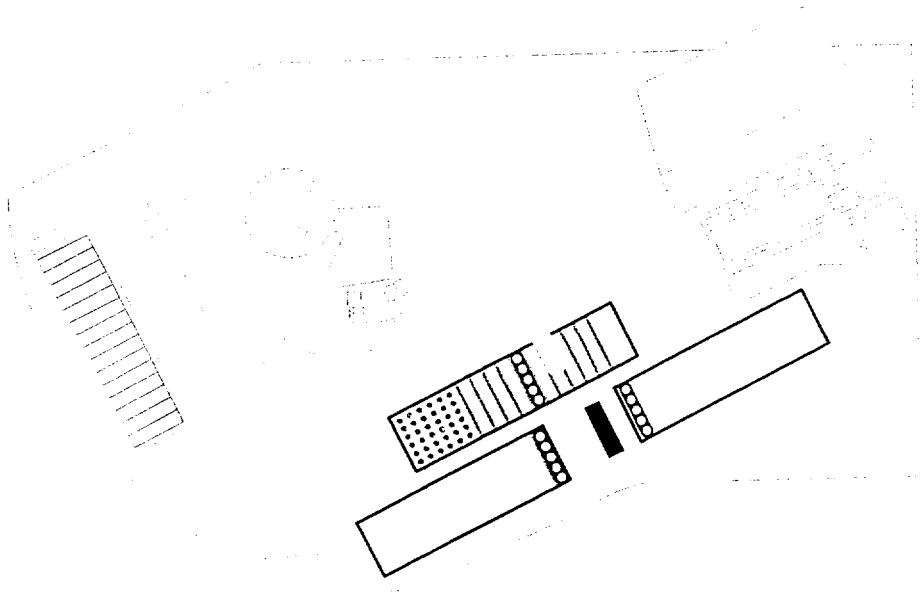

The operator selects the tube size for each sample rack, places the samples in the racks, and places the racks on the sample entry queue. The sample entry queue moves the racks to the inprocess queue.

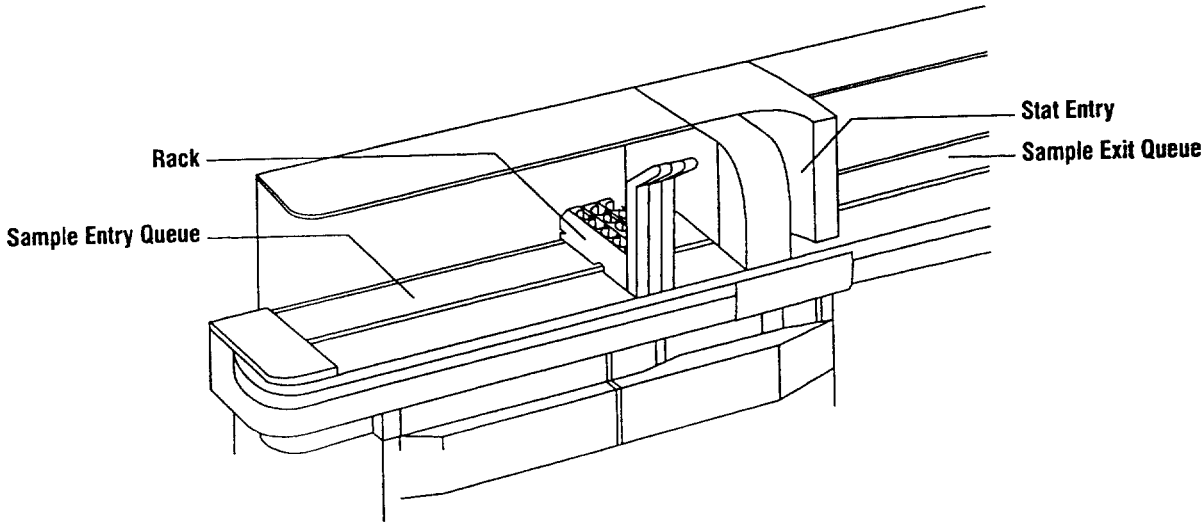

The sample rack is a universal, five-position rack that holds primary sample tubes or sample cups. The tube selector on each sample rack allows the operator to specify the tube size for the rack. The rack accommodates the tube sizes or sample cup sizes without additional adapters. The operator can specify up to four types of tubes at setup to be run on the system at one time.

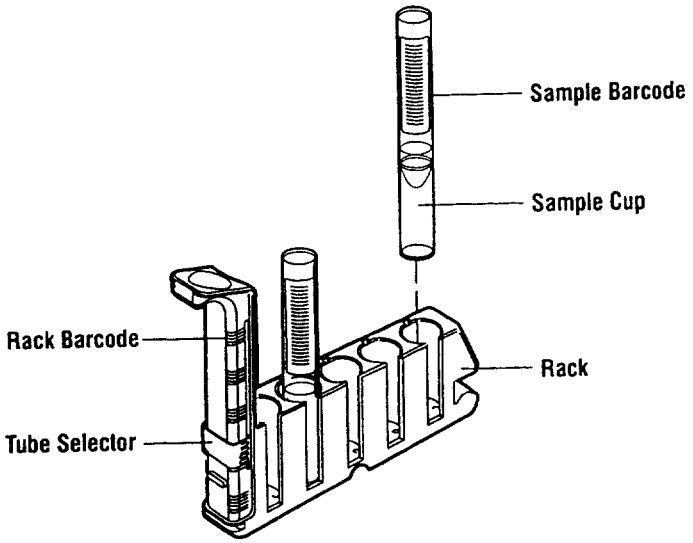

Each sample rack accommodates one sample cup or tube size on a rack. The barcode label on the sample cup or tube is visible and faces to the right when installed.

The operator places the racks in the sample entry queue, which holds up to 21 sample racks. If the sample entry queue is in standby, the operator presses the sample start button to activate the sample entry queue. The sample entry queue moves the sample racks one at a time to the inprocess queue.

The operator places Stat samples in a rack and installs the rack in the Stat entry. The system automatically assigns Stat priority to all samples in racks loaded in the Stat entry. The Stat entry moves the rack to the inprocess queue as soon as space is available. During setup, the operator can specify the number of inprocess queue spaces reserved for Stat racks.

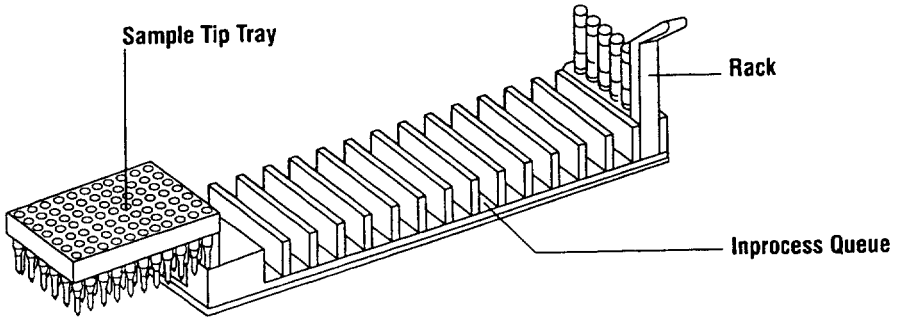

13 84

As racks enter the inprocess queue, the sample barcode scanner reads the barcode labels on each sample cup or tube. The scanner also scans the rack barcode.

On the left end of the inprocess queue is the sample tip loader, which holds a sample tip tray. The inprocess queue moves the sample tips to the sample probe and the sample probe picks up a sample tip. The probe aspirates the sample from the sample cup or primary tube and dispenses the sample into a cuvette.

After each sample in the rack has been sampled, the rack moves from the inprocess queue to the sample exit queue.

Reagent Loading

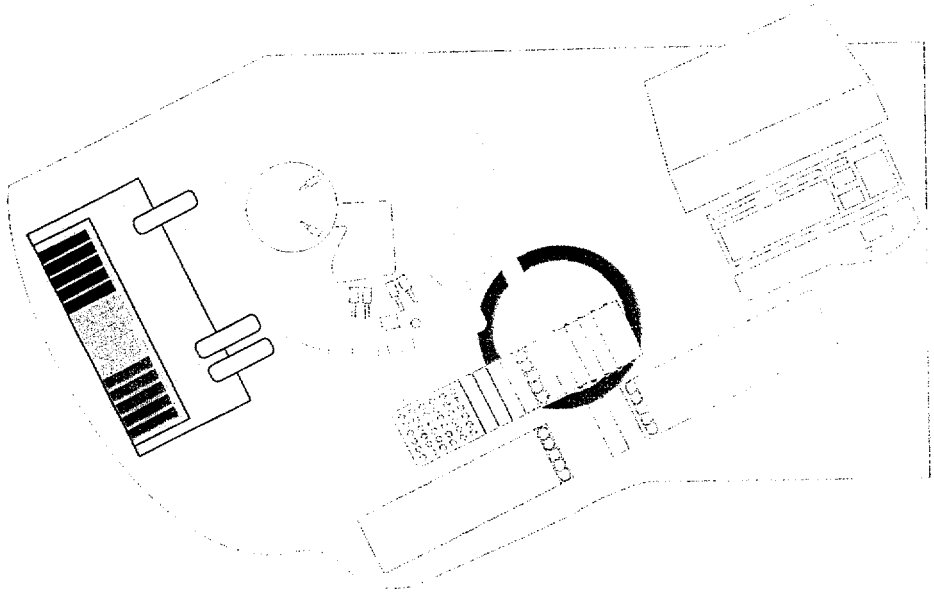

The operator can load ReadyPacks™ (primary reagent packs) and ancillary reagent packs while the system processes samples. The system stores up to 30 primary packs and up to 15 ancillary packs.

Primary Packs

Each primary pack contains Solid Phase and Lite Reagent with a third compartment for an additional reagent, if required. Each primary pack has a unique barcode that the system uses to identify the pack. The system tracks the volumes in each compartment and calculates the remaining number of tests in the pack.

After a reagent probe pierces the membrane on a pack, the reagent is stable for a minimum of 14 consecutive days unless otherwise stated on the label or in the product insert.

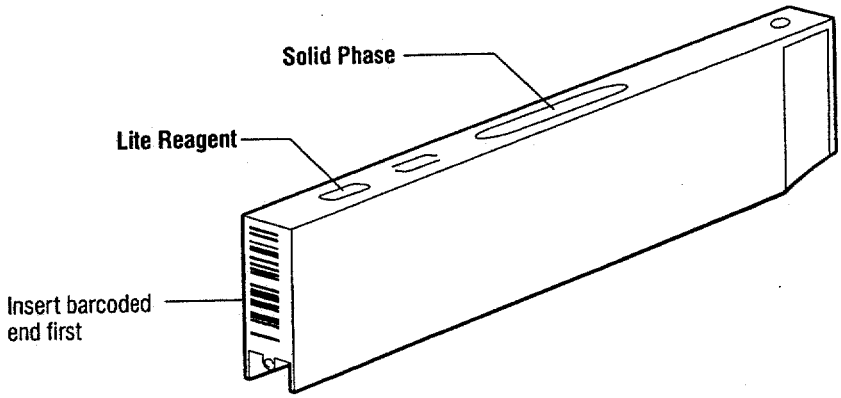

Primary Reagent Compartment

The operator loads the primary packs on the reagent slides in the primary reagent compartment, which stores the reagents at 6 to 14°C (43 to 57°F). The primary reagent shelf mixes the packs to maintain the reagents in suspension. Light-emitting diodes (LEDs) on the primary reagent door illuminate to indicate the pack status.

- If the LED is lit, then the pack cannot be removed because it is in use by the system.
- If the LED is not lit, then the pack can be removed.

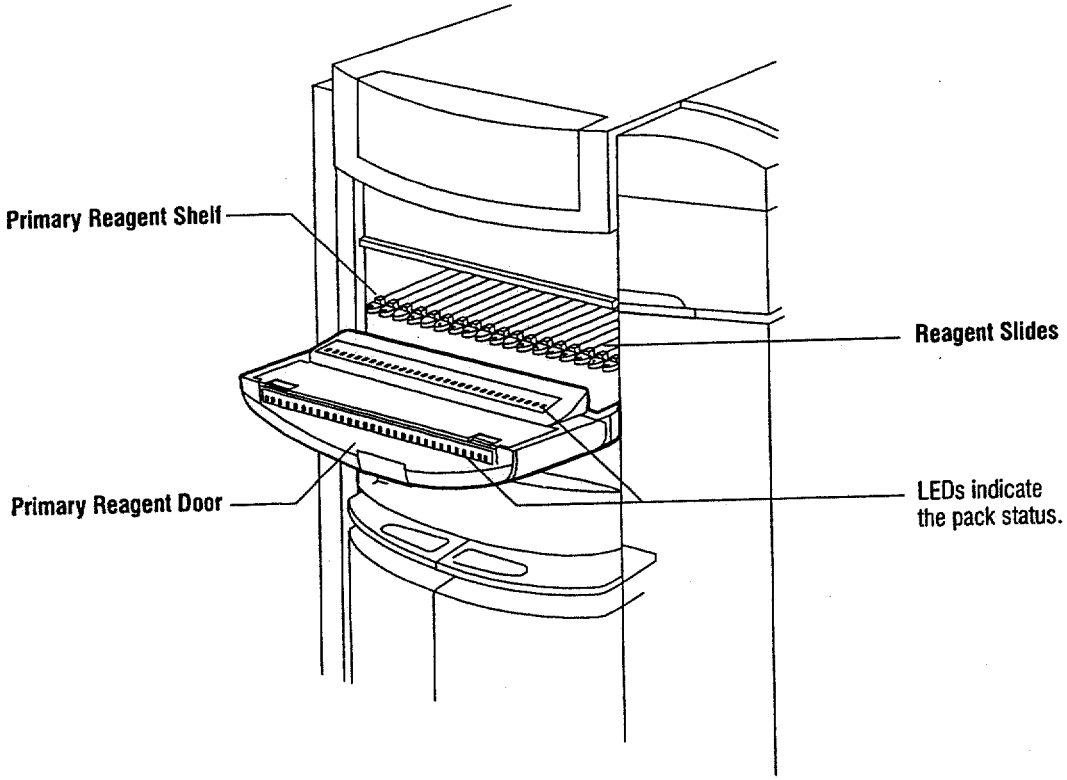

56

87

Ancillary Packs

Each ancillary pack contains one ancillary reagent. The system tracks the fluid volume in the ancillary packs that are ready to use. Each ancillary pack has a unique barcode that the system uses to identify the pack and track the volume remaining in the pack. Refer to the product inserts for ancillary reagent stability. Some ancillary packs are refillable.

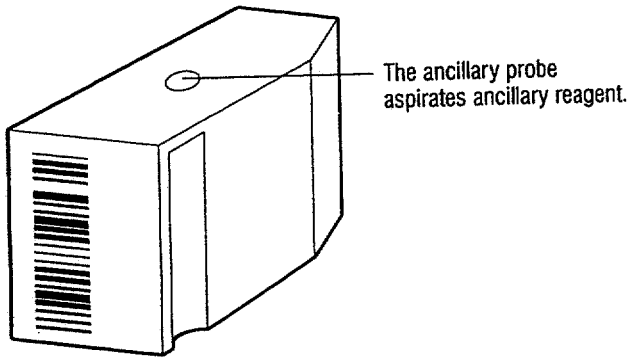

Ancillary Reagent Queue

The operator loads an ancillary pack in and removes the packs from the ancillary reagent entry. The ancillary reagent queue stores the ancillary packs at a temperature of 6 to 14°C (43 to 57°F).

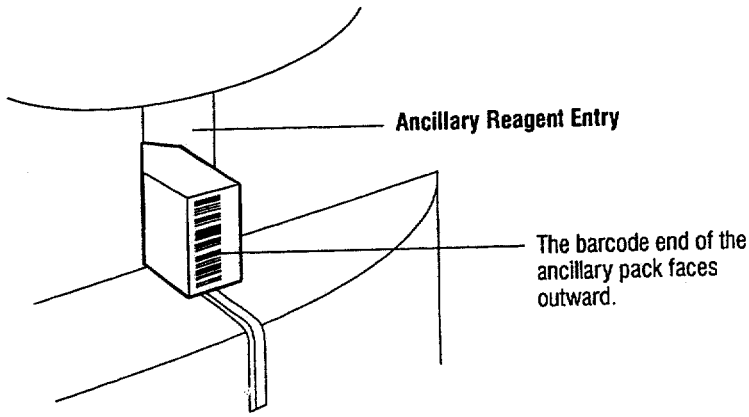

Supplies and Wastes

The system requires occasional replenishing of supplies and emptying of wastes. Refer to *Replenishing Supplies* in section 4 for procedures describing how to replenish supplies and empty wastes.

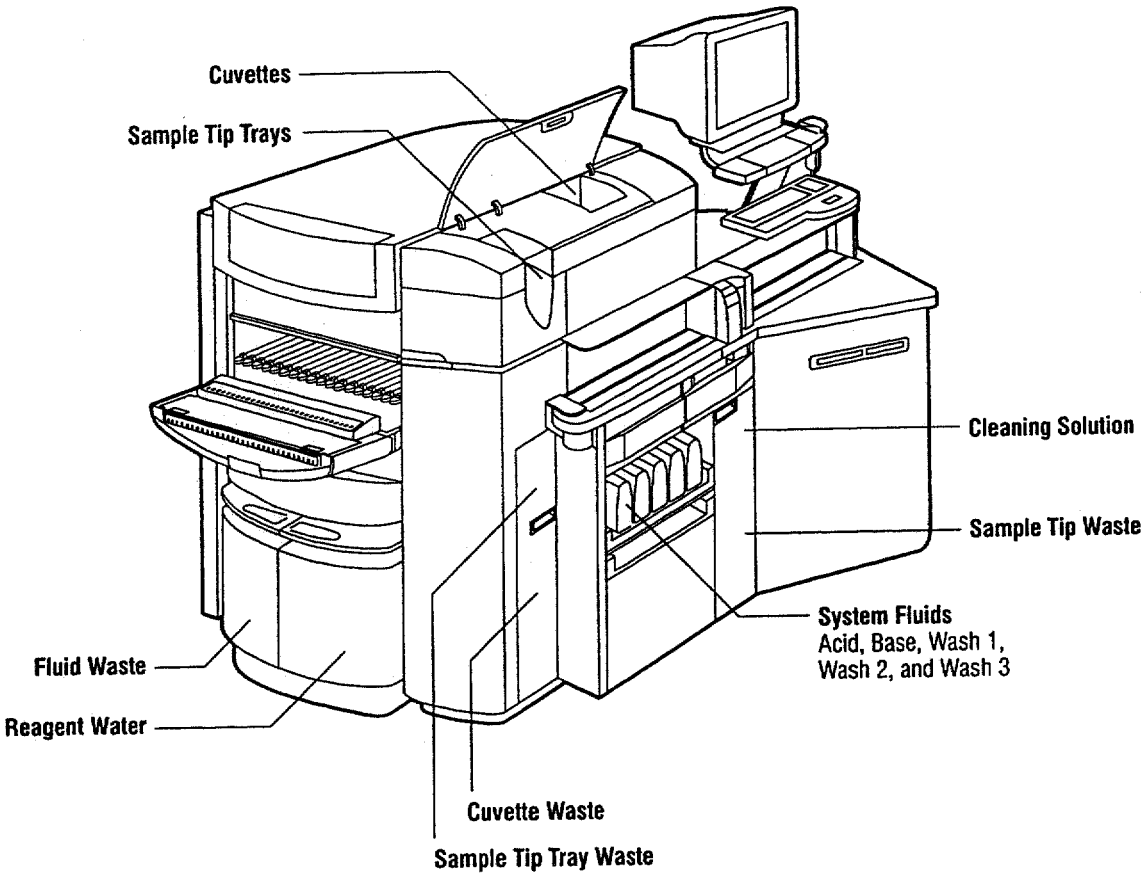

Test Sequence

The operator can start the sample entry queue by pressing the sample start button near the sample entry queue. The system automatically stops when sample processing completes.

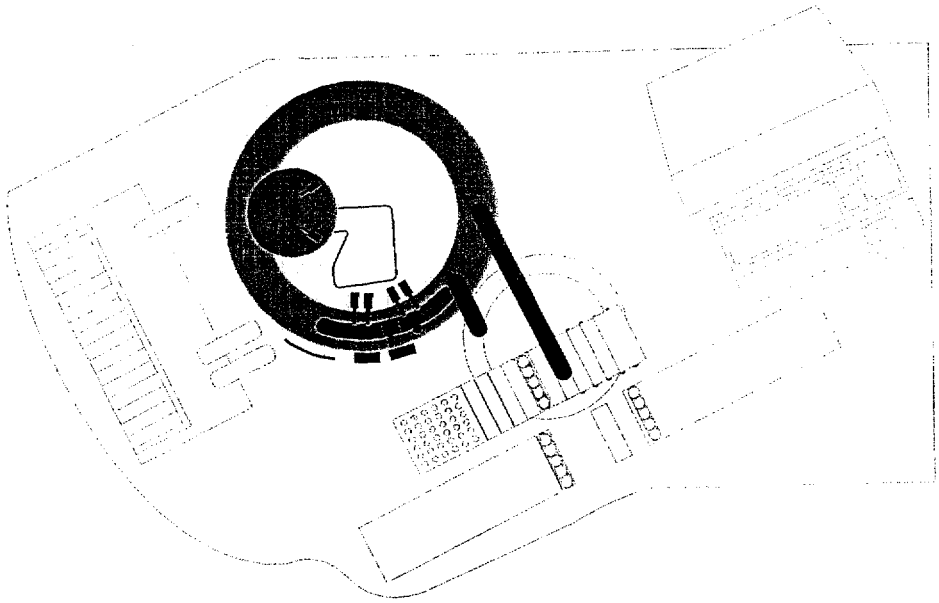

90

Cuvette Loading

The cuvette conveyor moves cuvettes from the cuvette loading bin to the orientation chute. The orientation chute correctly positions the cuvette before it enters the vertical cuvette chute. The vertical cuvette chute connects to the preheater, which warms the cuvettes to a temperature of 37°C. The cuvette then enters the incubation ring.

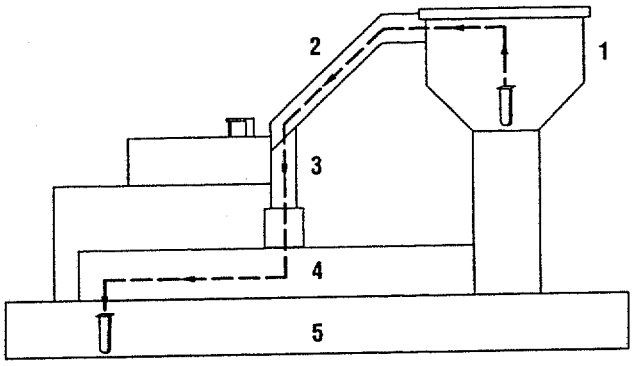

1 Cuvette Loading Bin
2 Orientation Chute
3 Vertical Cuvette Chute
4 Preheater
5 Incubation Ring

60

Incubation Ring

The incubation ring is a cylindrical, insulated track that incubates the assay reaction mixture in the cuvette. The ring moves cuvettes from the preheater to the probes and the magnets. The ring advances the cuvettes at 15-second intervals and incubates the cuvettes at 37°C. The magnets attract the magnetic particles (PMP) to the side of the cuvette and separate the bound sample from the unbound sample during the aspirate and wash cycles. The ring then moves the cuvette to the luminometer.

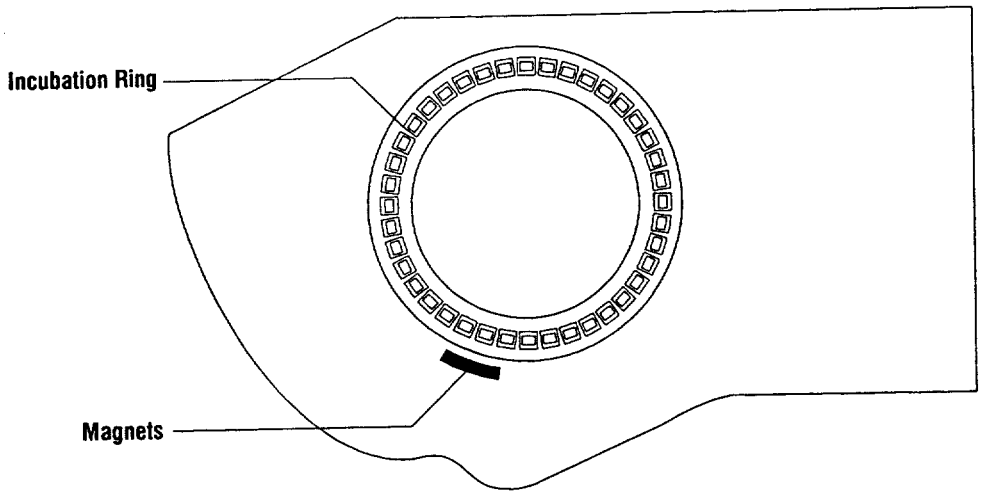

Sample Probe

The sample moves from the sample entry queue or the Stat entry past the barcode reader to the inprocess queue. The sample then moves to the sample probe for sampling and then to the sample exit queue.

The sample probe picks up a disposable sample tip from the sample tip tray. The sample probe aspirates sample from the inprocess queue, dispenses sample into a cuvette in the incubation ring, and dilutes the sample if requested. After dispensing the sample, the tip remover removes the sample tip.

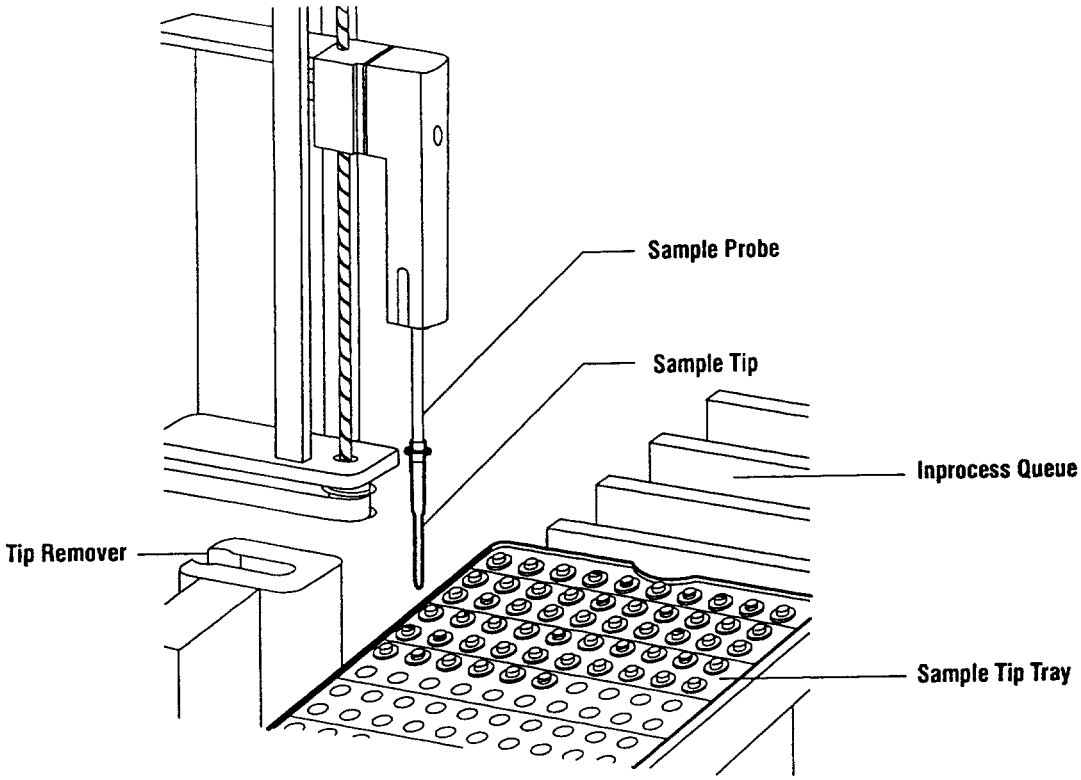

The clot alert feature detects complete obstructions in the sample probe by monitoring the fluid pressure in the sample probe. The fluid level sensor detects when the sample probe tip reaches fluid.

The system optimizes sampling for maximum throughput, taking into account the types of tests that are requested on the samples in the inprocess queue.

62 93

Ancillary Probe

The ancillary probe aspirates the ancillary reagents from the ancillary packs in the ancillary queue and dispenses ancillary reagents into cuvettes in the incubation ring. The rinse station rinses the probe with reagent water before each reagent aspiration.

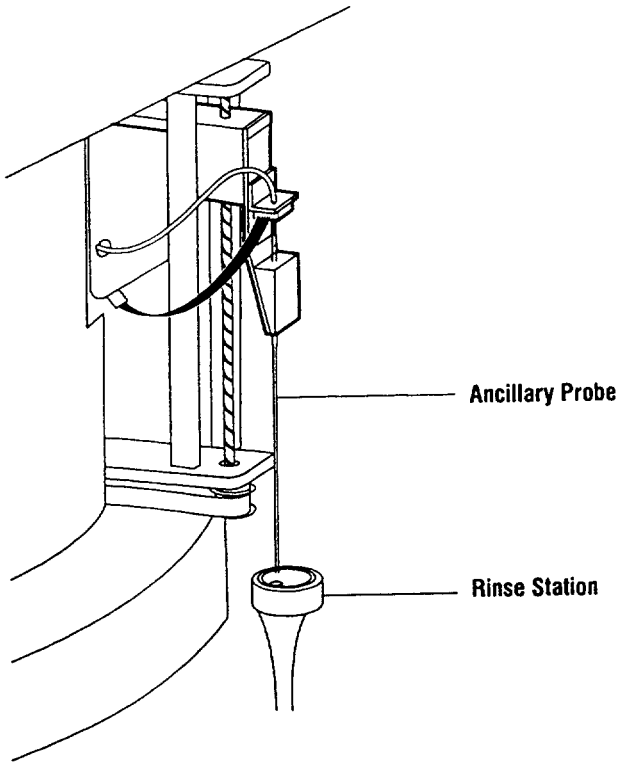

Reagent Probes

The incubation ring moves the cuvettes to the reagent probes. The three reagent probes move independently of each other to aspirate primary reagents from the primary packs and to dispense primary reagents into cuvettes in the incubation ring. The rinse stations rinse the probes with reagent water before each reagent aspiration.

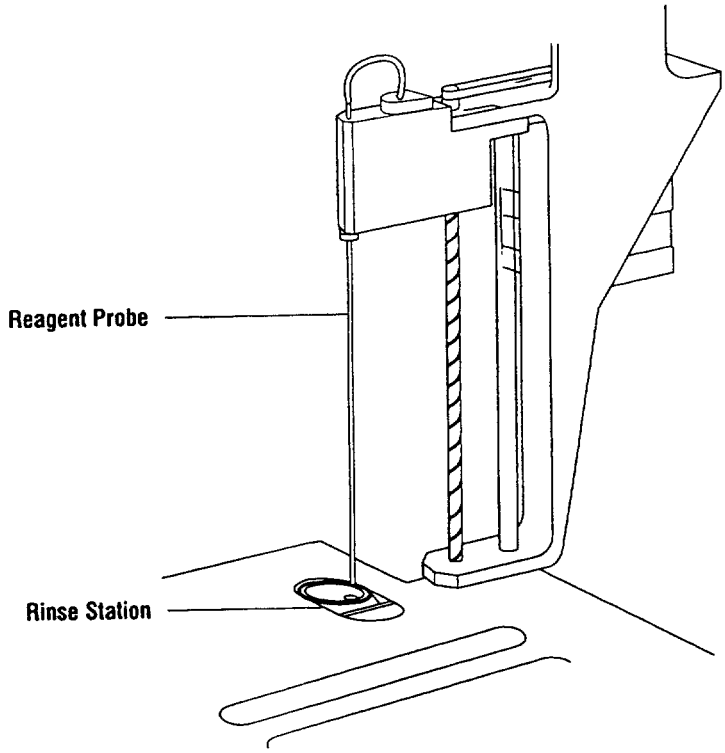

Aspirate Probes, Wash Stations, and Acid Probe

The incubation ring moves the cuvettes to the aspirate probes and the acid probe. After the magnetic particles are pulled to the side of the cuvette, the aspirate probes draw fluid out of the cuvettes. The wash stations dispense wash fluid into the cuvettes to wash the magnetic particles. The displacement station dispenses wash fluid into the cuvettes to resuspend the magnetic particles.

The acid probe dispenses acid reagent into the cuvette. The system fluid drawer contains acid reagent and wash fluids.

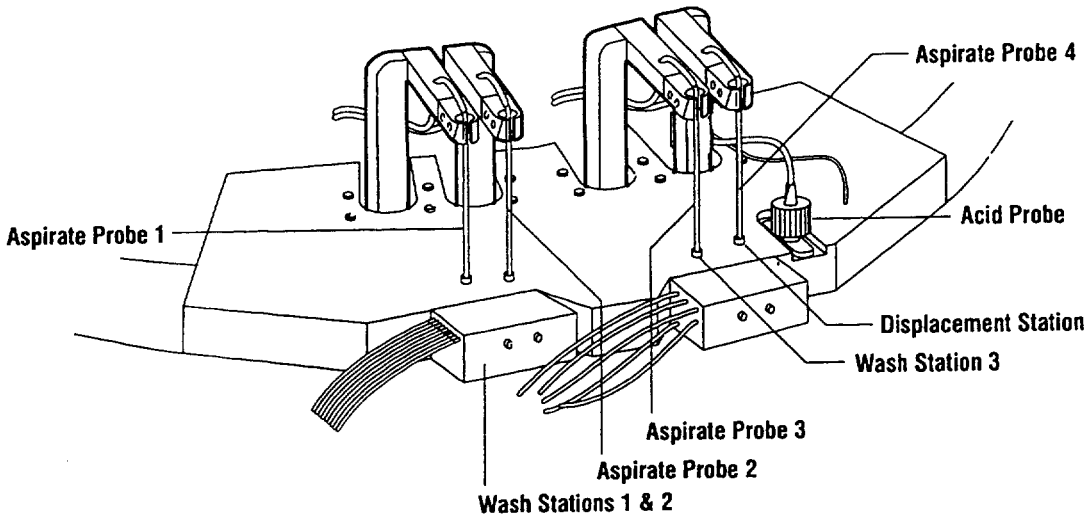

65 96

Elevator, Luminometer, and Base Probe

After acid reagent is added to cuvettes, the incubation ring moves the cuvettes to the elevator. The elevator lifts cuvettes from the incubation ring into the luminometer.

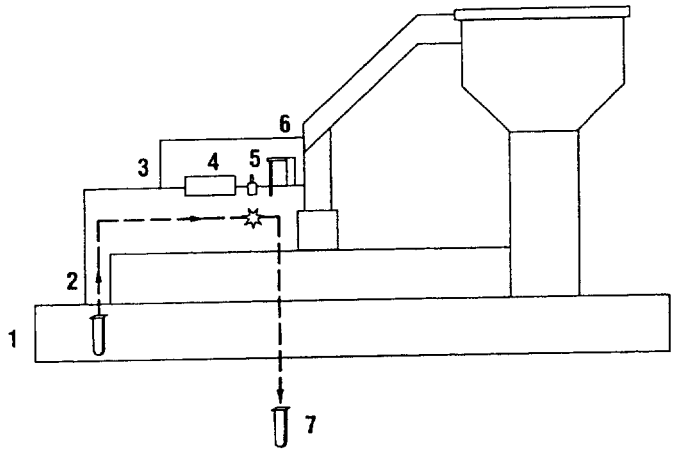

1 Incubation Ring
2 Elevator
3 Luminometer
4 PMT
5 Base Probe
6 Waste Probe
7 Cuvette

The luminometer has a photomultiplier tube (PMT) with photon-counting electronics, a reference LED, a base probe, and a waste probe. Base reagent is injected into the cuvette, and the chemiluminescent reaction occurs and emits light. The luminometer measures the light as relative light units (RLUs). The waste probe then aspirates the waste fluid from the cuvette and the cuvette drops into the cuvette waste bin.

66 97

3 Workstation

Workstation Components 3-3
GlidePoint Pointing Device 3-3
Barcode Scanner 3-4
Keyboard 3-5
Monitor 3-5

Workspace 3-6
Status Buttons 3-7
Task Buttons 3-8
Function Buttons 3-8

Window Components 3-9
Window Structure 3-9
Window Elements 3-9
Interacting with the Windows 3-11

Online Information 3-12
Windows 3-12
Fields and Buttons 3-12
Maintenance Activities 3-12
Event Codes 3-12

b)

48

Workstation Components

You use the ACS:Centaur workstation to control the operation of the system. The workstation consists of hardware and software that you use to interact with the system.

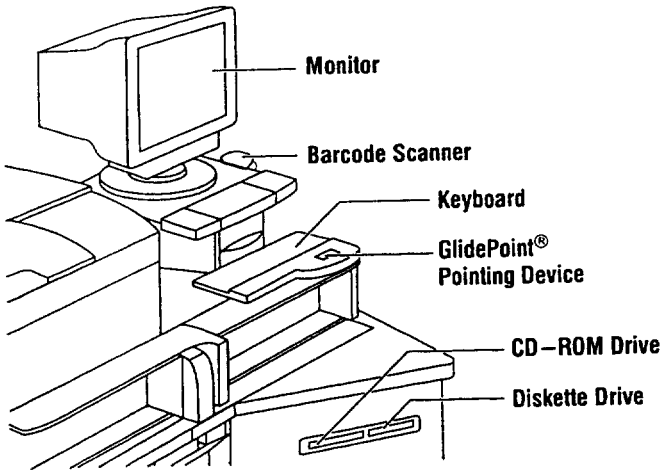

The workstation hardware includes the following components:

- GlidePoint® pointing device
- Barcode scanner
- Keyboard
- Monitor

GlidePoint Pointing Device

Use the GlidePoint pointing device to move the pointer on the screen and select workspace buttons, menu items, or window elements, and then enter information or select options.

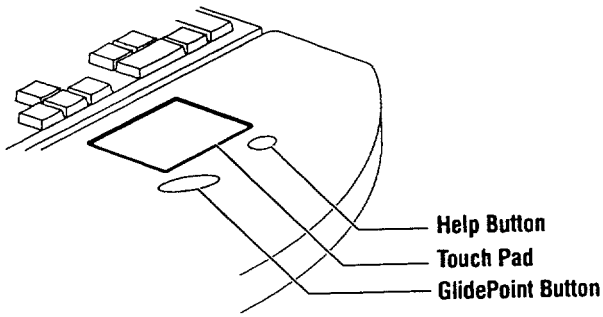

65 99

The GlidePoint pointing device is designed for biosafety. You can wear gloves while using the pointing device. The GlidePoint surface is resistant to spills and is easy to clean using standard laboratory disinfectants.

To move the pointer on the screen, slide your finger across the surface of the touch pad. To make a selection, move the pointer to the item and then press and release the GlidePoint button. To access online help, place the pointer over a field or a button and press the help (?) button.

If you want to . . .	*Then . . .*
select an item in a drop-down list	1. Move the pointer to the down arrow next to the field. 2. Press and release the GlidePoint button. The list of options opens. 3. Move the pointer to an option. 4. Press and release the GlidePoint button.
select an item in a table in order to perform a task	1. Move the pointer to an item in the table. 2. Press and release the GlidePoint button.
select an option	1. Move the pointer to the square or diamond next to an option. 2. Press and release the GlidePoint button.
enter information into a field	1. Move the pointer to a field. 2. Press and release the GlidePoint button. 3. Type the information into the field.

69

Barcode Scanner

You can use the hand-held barcode scanner to enter barcoded information, such as the information on Master Curve cards or reagent packs.

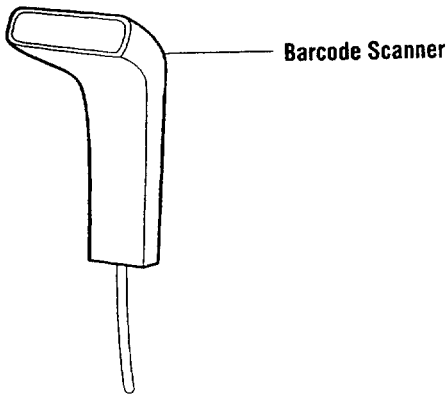

Keyboard

You can use the keyboard to enter text and to make selections.

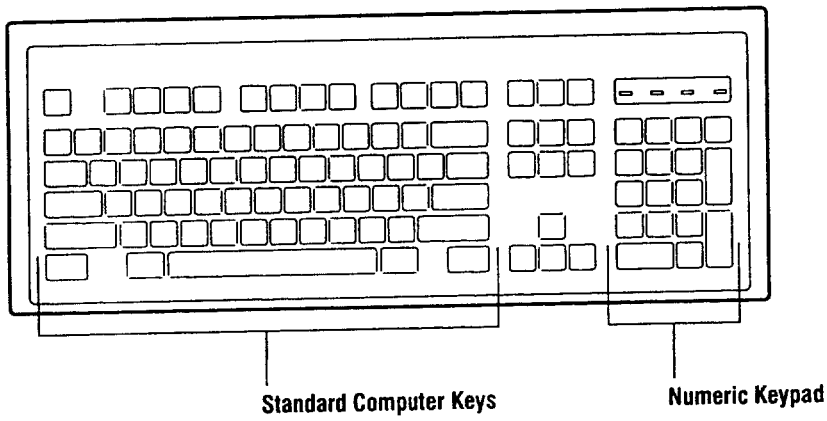

Monitor

The monitor is located on a flexible arm that moves to the optimum location for viewing.

The monitor displays the workspace, which allows access to windowing-type software to operate the system.

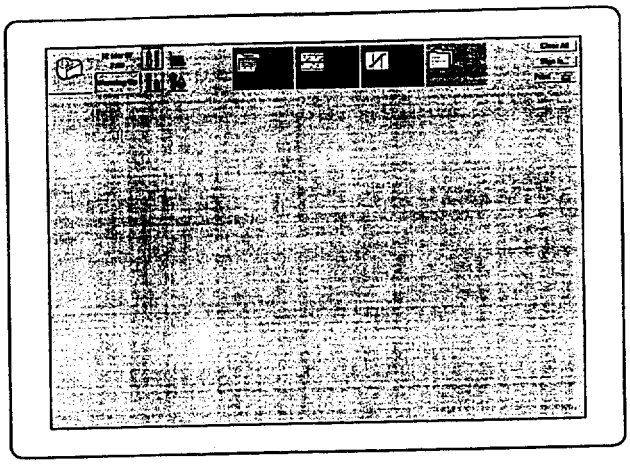

The workspace, which is always visible on the monitor, provides immediate access to all information that an operator requires to analyze samples, maintain the system, and track data. Refer to *Workspace*, page 3-7, for detailed information about the workspace and how to interact with the software.

Workspace

The workspace provides access to all system functions and information that an operator requires to operate the system. The workspace is similar to a benchtop. At a benchtop, you can pull several reports (windows) from different files (workspace buttons), and spread them out to review or to enter information. Although you can work on only one document at a time (active window), the others are ready for you. You can return the report to the file (close the window) or you can leave the report on the benchtop (leave the window open).

The workspace buttons are grouped into three areas: status buttons, task buttons, and function buttons.

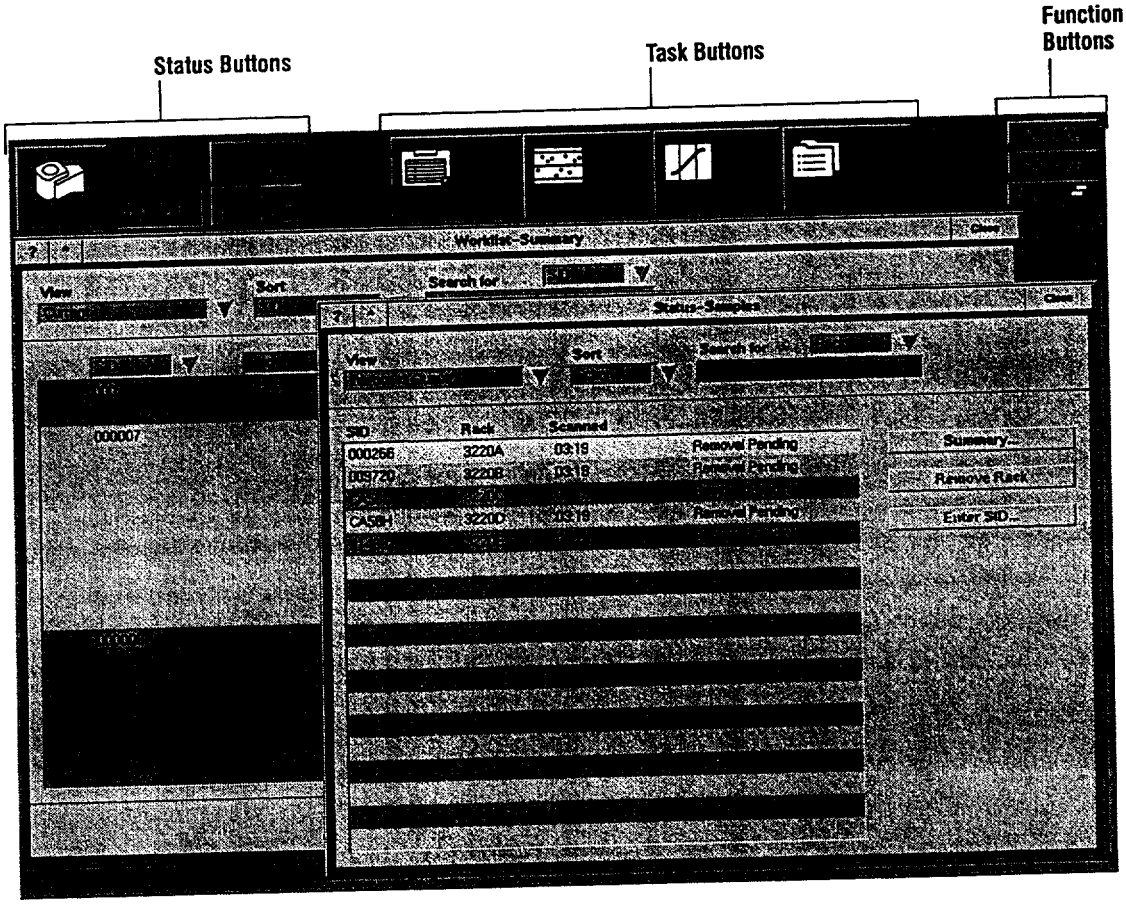

Refer to *Interacting with the Windows*, page xx, for information on moving, opening, and closing windows, and on selecting and entering data.

Status Buttons

The status buttons open windows that provide information on the condition of the entire system and of specific system areas.

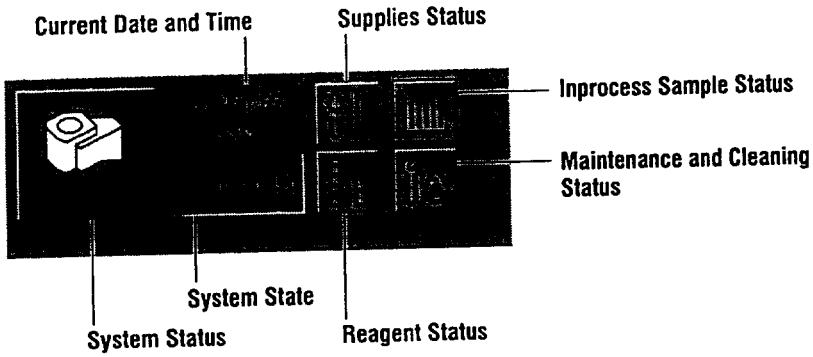

System Status	Accesses system status, event log, diagnostic tools, and information about the system.
Date and Time	Provides the current date and time.
System State	Provides information about the current state of the system.
Supplies Status	Provides information about sample tip and cuvette supplies, and system fluid and waste levels.
Inprocess Sample Status	Provides information about the status of the inprocess samples, such as when the result is due, insufficient sample volume, no request, and other messages.
Maintenance and Cleaning Status	Accesses the maintenance and cleaning schedule, log, and procedures.
Reagent Status	Provides information about onboard primary and ancillary reagents. Allows you to enter reagent data, activate reagent packs, or inactivate reagent packs.

The background color of the status buttons changes from grey to yellow or red to indicate that a system area requires attention:

- Yellow indicates that a warning condition exists, such as a low supply.
- Red indicates that a failure condition exists, such as an empty supply, that may cause the system to stop aspirating or processing samples.

Task Buttons

The task buttons provide access to windows associated with specific tasks. When selected, each button displays a list of the most frequently used windows in that area.

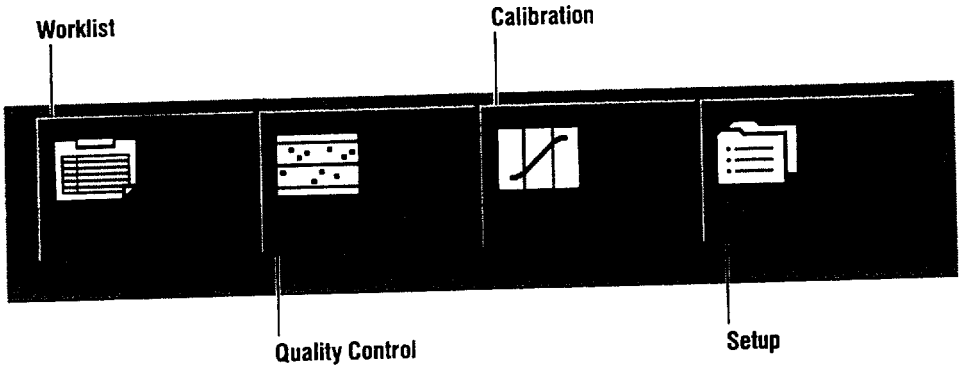

Worklist	This button accesses tasks associated with analyzing samples and reporting results such as scheduling samples, performing dilutions, and reviewing results.
Quality Control	This button accesses quality control tasks such as defining controls, defining rules, Levey-Jennings charts, and reviewing results.
Calibration	This button accesses calibration tasks such as status of current calibrations, defining Master Curves, defining calibrators, and reviewing calibration results.
Setup	This button accesses setup tasks such as reference ranges, dilutions, reflex tests, profiles, and data administration.

Function Buttons

The function buttons provide additional capabilities related to the workspace such as closing all windows, accessing system security, and requesting printed reports.

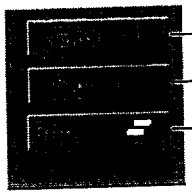

Select Close All to close all open windows.

Select Sign In to enter your initials and a password.

Select Print to access a menu of reports available fc. printing.

Window Components

Window Structure

On the workspace, related information and tasks are grouped in windows. The windows are designed with a common organization. Since the purpose of each window is unique, the organization of each window may vary to best achieve the objective of each window.

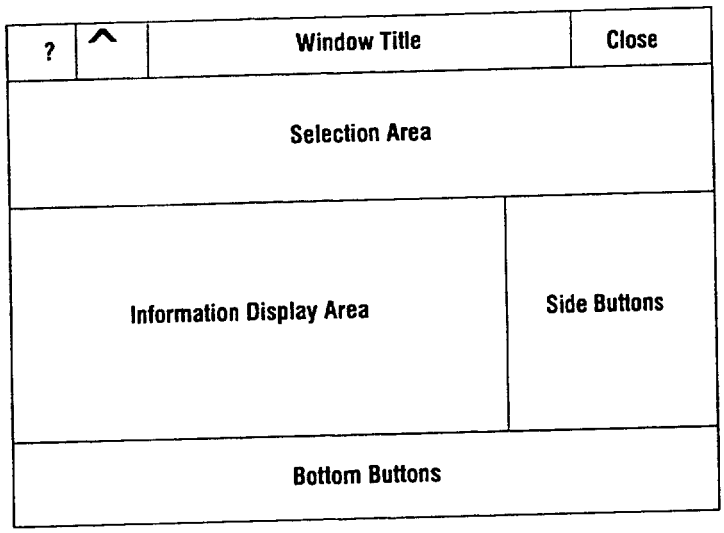

?	Select this symbol to access window help.
^	Select this symbol to move the window behind other windows.
Window Title	This title indicates the task area and the name of the specific window (for example, Worklist– Summary).
Close	Select this symbol to close the window.
Selection Area	The fields within the selection area control the information that is displayed in the window and the order of information display.
Information Display Area	This area displays the selected information.
Side Buttons	These buttons perform actions or open windows that provide more information about the selected information in the display area.
Bottom Buttons	These buttons act on all information displayed or open additional windows.

Window Elements

Window elements are the components on the windows that enable you to make selections and interact with the windows.

Interacting with the Windows

You can open a window from the workspace task buttons, the workspace status symbols, or from another window.

If you want to . . .	*Then . . .*
open a window from a task button	1. At the workspace, move the pointer to a task button. 2. Press and release the GlidePoint button. The drop-down list of window titles opens. 3. Move the pointer to a window title. 4. Press and release the GlidePoint button.
open a status window from a workspace status button	1. At the workspace, move the pointer to a status button. 2. Press and release the GlidePoint button.
open a window containing related information from another window	1. Select an item in a table. 2. Move the pointer to a button with an ellipsis (...). 3. Press and release the GlidePoint button. The new window displays information related to the item selected in the previous window.
open a window from another window	1. Move the pointer to a button with an ellipsis (...). 2. Press and release the GlidePoint button. The new window displays related information entered in the previous window.
close one window	1. Move the pointer to the close symbol in the upper right corner of the window. 2. Press and release the GlidePoint button.
close all the windows at once	1. Move the pointer to the Close All button in the upper right corner of the workspace. 2. Press and release the GlidePoint button.

Online Information

The system provides online help and procedures to answer your questions about operating and maintaining the system, and correcting system problems. Information and procedures are provided for windows, and more specific information is provided for individual window elements such as buttons, fields, and tables. Online procedures are available for scheduled maintenance activities and event codes.

Windows

Window help provides operating procedures for options available at each window and brief instructions for using the window. To access help on a window, place the pointer on the ? button in the title bar and then press the GlidePoint button.

Fields and Buttons

Field help provides information and brief procedures for every field and button on a window. To access help on a field or button, place the pointer on the field or the button and then press the ? button on the GlidePoint® pointing device or the ? key on the keyboard.

Maintenance Activities

Maintenance activity information provides a brief procedure on how to perform the maintenance. To access information about a maintenance activity, select a maintenance activity in the Maintenance Log and then select the Procedure button. Refer to *Maintenance* in Section 7 for detailed maintenance information.

Event Codes

Event code information provides brief descriptions and procedures for isolating and solving system events. To access information about an event code, select the event code in the event log, and then select the Procedure button. When the online information window opens, select simple search from the search menu, and enter the event code for which you want information. Refer to *Troubleshooting* in Section 8 for detailed troubleshooting information.

4 Operating the System

Introduction 4-3
Manually Entering Requests at a Stand-alone System 4-3
Manually Receiving Requests from the LIS 4-4
LIS Integrated with Dynamic Download 4-5
LIS Integrated with Host Query 4-7

Loading Sample Racks 4-9
Loading Stat Samples 4-10

Replenishing Reagents 4-12
Reviewing Reagent Inventory 4-12
Reviewing Reagent Status 4-12
Reviewing Primary Reagent Status 4-13
Adding Primary Reagent Packs 4-14
Reviewing Ancillary Reagent Status 4-14
Adding Ancillary Reagent Packs 4-15

Replenishing Supplies 4-16
Reviewing Supplies Status 4-16
Preparing the Water and Waste Bottles 4-17
Adding Cuvettes 4-19
Adding Sample Tips 4-20
Emptying the Waste Bins 4-21
Replacing the System Fluids 4-24

Reviewing Inprocess Samples 4-26

Modifying the Worklist 4-28
Reviewing the Worklist Summary 4-28
Querying an LIS 4-29
Adding Patient Requests 4-29
Entering Patient Demographics 4-30

78 104

Adding Stat Requests 4-31
Adding Batch Requests 4-31
Adding Calibrator Requests 4-32
Adding Control Requests 4-33
Entering Dilution Options 4-34
Entering Reagent Options 4-35
Editing Requests 4-36
Editing Batch Requests 4-36
Deleting Requests 4-37

Evaluating the Results 4-38
Reviewing Results 4-38
Repeating a Test 4-39
Editing Results 4-39
Sending Results to an LIS 4-40
Printing Sample Results 4-40
Deleting Selected Sample Results 4-41
Deleting Worklist Results 4-42

Maintaining Data Files 4-43
Archiving Results 4-43
Restoring Archived Results 4-44

Introduction

The ACS:Centaur system is a continuous operation system that accommodates many laboratory environments and workflow styles. As a result of this flexibility, you can perform tasks in the order that meets your needs.

For ease of use, the operating procedures in this section are arranged according to the following operating scenarios:

- Manually entering requests at a stand-alone system
- Manually receiving requests from the LIS
- LIS integrated with dynamic download
- LIS integrated with host query

Manually Entering Requests at a Stand-alone System

If the ACS:Centaur system is not connected to an LIS or HIS, you need to perform the following required procedures:

- Scheduling samples
- Loading the sample racks

You may also need to perform some of the following optional procedures:

- Scheduling and loading stats
- Modifying the worklist
- Reviewing inprocess samples
- Reviewing the reagent inventory
- Checking status
- Replenishing supplies
- Printing sample results
- Maintaining data files

You can use the following suggested operating procedure.

1. At the **Worklist–Schedule** window, schedule the requests.
2. At the Worklist–Summary window, review the worklist.

   If you want to view the worklist as you create it, open the Worklist–Summary window and select Summary at the Worklist–Schedule window if you want to view new requests on the worklist.
3. Check the supplies:

a. Visually verify that the cuvettes, sample tips, water, and system fluids are sufficient.

b. Visually verify that the space for solid and fluid waste is sufficient.

c. At the Worklist–Reagent Inventory window, visually verify that the reagent is sufficient for the number of requested tests.

   Load additional reagents if required, and then verify that the system reads the barcode. View the status of a primary pack at the Status–Primary Reagent window, or view the status of an ancillary pack at the Status–Ancillary Reagent window.

4. Load the samples in racks and load the racks in the sample entry queue.

5. At the Status–Samples window, verify that the system reads the barcodes.

   If the system cannot read the barcodes, enter the SID.

6. At the Worklist–Summary window, sort by Scanned and select Time Due at the Results column to track the progress of samples.

7. During operation, observe the system workspace for symbols that turn yellow or red.

   If you see symbols that turn yellow or red, check the status.

8. Remove the racks from the sample exit queue and load additional racks as required.

9. Review the results and release On Hold results, if required.

10. Print reports, if required.

Manually Receiving Requests from the LIS

If the ACS:Centaur system manually receives requests from an LIS or HIS, you need to perform the following required procedure:

- Loading the sample racks

You may also need to perform some of the following optional procedures:

- Scheduling and loading stats
- Modifying the worklist
- Reviewing inprocess samples
- Reviewing the reagent inventory
- Checking status
- Replenishing supplies
- Printing sample results
- Maintaining data files

81 112

You can use the following suggested operating procedure.

1. At the Worklist–LIS Communications window, download the requests from the LIS.
2. At the Worklist–Summary window, review the worklist.

   If you want to view the worklist as you create it, open the Worklist–Summary window and select Summary at the Worklist–Schedule window if you want to view new requests on the worklist.
3. Check the supplies:
   a. Visually verify that the cuvettes, sample tips, water, and system fluids are sufficient.
   b. Visually verify that the space for solid and fluid waste is sufficient.
   c. At the Worklist–Reagent Inventory window, visually verify that the reagent is sufficient for the number of requested tests.

      Load additional reagents if required, and then verify that the system reads the barcode. View the status of a primary pack at the Status–Primary Reagent window, or view the status of an ancillary pack at the Status–Ancillary Reagent window.
4. Load the samples in racks and load the racks in the sample entry queue.
5. At the Status–Samples window, verify that the system reads the barcodes.

   If the system cannot read the barcodes, enter the SID.
6. At the Worklist–Summary window, sort by Scanned and select Time Due at the Results column to track the progress of samples.
7. During operation, observe the system workspace for symbols that turn yellow or red.

   If you see symbols that turn yellow or red, check the status.
8. Remove the racks from the sample exit queue and load additional racks as required.
9. Review the results and release On Hold results, if required.
10. At the Worklist–LIS Communications window, send the results to the LIS.

LIS Integrated with Dynamic Download

If the ACS:Centaur system is connected to an LIS or HIS and uses dynamic downloading, you need to perform the following required procedure:

- Loading the sample racks

You may also need to perform some of the following optional procedures:

- Loading Stats

8✓ 113

- Scheduling samples
- Querying an LIS
- Modifying the worklist
- Reviewing inprocess samples
- Reviewing the reagent inventory
- Checking status
- Replenishing supplies
- Sending results to an LIS
- Maintaining data files

You can use the following suggested operating procedure.

1. At the Worklist–Summary window, review the worklist.

   If you want to view the worklist as you create it, open the Worklist–Summary window and select Summary at the Worklist–Schedule window if you want to view new requests on the worklist.

2. Check the supplies:
   a. Visually verify that the cuvettes, sample tips, water, and system fluids are sufficient.
   b. Visually verify that the space for solid and fluid waste is sufficient.
   c. At the Worklist–Reagent Inventory window, visually verify that the reagent is sufficient for the number of requested tests.

      Load additional reagents if required, and then verify that the system reads the barcode. View the status of a primary pack at the Status–Primary Reagent window, or view the status of an ancillary pack at the Status–Ancillary Reagent window.

3. Load the samples in racks and load the racks in the sample entry queue.
4. At the Status–Samples window, verify that the system reads the barcodes.

   If the system cannot read the barcodes, enter the SID.

5. At the Worklist–Summary window, sort by Scanned and select Time Due at the Results column to track the progress of samples.
6. During operation, observe the system workspace for symbols that turn yellow or red.

   If you see symbols that turn yellow or red, check the status.

7. Remove the racks from the sample exit queue and load additional racks as required.
8. Review the results and release On Hold results, if required.

83

LIS Integrated with Host Query

If the ACS:Centaur system is connected to an LIS or HIS, and you can use host query, you need to perform the following required procedures:

- Loading the Sample Racks
- Querying an LIS

You may also need to perform some of the following optional procedures:

- Loading Stats
- Scheduling samples
- Modifying the worklist
- Reviewing inprocess samples
- Reviewing the reagent inventory
- Checking status
- Replenishing supplies
- Sending results to an LIS
- Maintaining data files

You can use the following suggested operating procedure.

1. Check the supplies:
   a. Visually verify that the cuvettes, sample tips, water, and system fluids are sufficient.
   b. Visually verify that the space for solid and fluid waste is sufficient.
   c. At the Worklist–Reagent Inventory window, visually verify that the reagent is sufficient for the number of requested tests.

      Load additional reagents if required, and then verify that the system reads the barcode. View the status of a primary pack at the Status–Primary Reagent window, or view the status of an ancillary pack at the Status–Ancillary Reagent window.
2. Load the samples in racks and load the racks in the sample entry queue.
3. At the Status–Samples window, verify that the system reads the barcodes.

   If the system cannot read the barcodes, enter the SID.
4. At the Worklist–Summary window, sort by Scanned and select Time Due at the Results column to track the progress of samples.
5. During operation, observe the system workspace for symbols that turn yellow or red.

   If you see symbols that turn yellow or red, check the status.

84 115

6. Remove the racks from the sample exit queue and load additional racks as required.
7. Review the results and release On Hold results, if required.

Loading Sample Racks

Refer to the assay product inserts for the volume of calibrators, controls, and patient samples required for each test.

BIOHAZARD: Refer to Appendix A, *Protecting Yourself from Biohazards*, for recommended precautions when working with biohazardous materials.

CAUTION: To avoid breakage of primary sample tubes, refer to Appendix F, *Specifications*, for acceptable sizes of primary sample tubes. At the Setup–Summary window, you can select **Barcode & Tube Type** to display the four sizes of sample tubes or sample cups that you selected to run on the system.

NOTE: The barcode should adhere completely to the tube or sample cup. Placing more than two barcode labels on a primary sample tube can make the tube diameter too wide to fit in the rack. If a primary sample tube has more than two barcode labels, transfer the specimen to an appropriately labeled sample cup.

1. If you use sample cups:
   a. Label sample cups with the appropriate calibrator, control, or patient sample barcode labels.

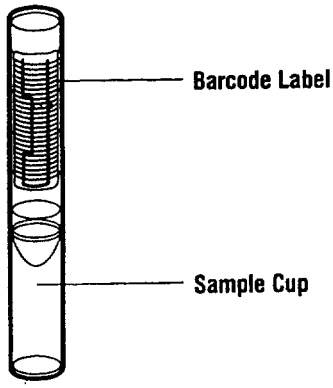

   b. Dispense the appropriate volume of sample into the labeled sample cups.

CAUTION: The rack must contain only one size of sample cup or tube. The rack indicator must be positioned at the correct setting for the size of sample cup or tube.

2. Load each sample container into the rack.

86 117

Ensure that the barcode label on the sample cup is clearly visible through the slot in the rack.

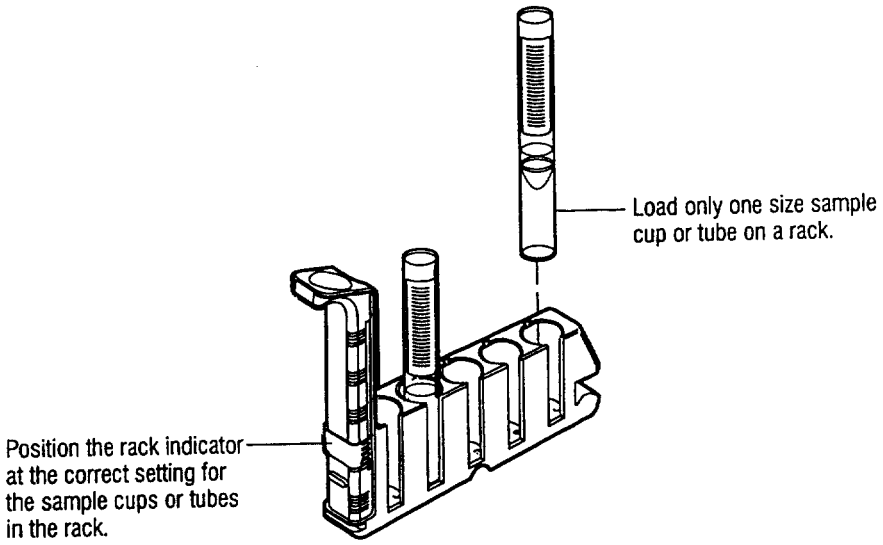

3. Load the rack in the sample entry queue, ensuring that the rack fits securely.

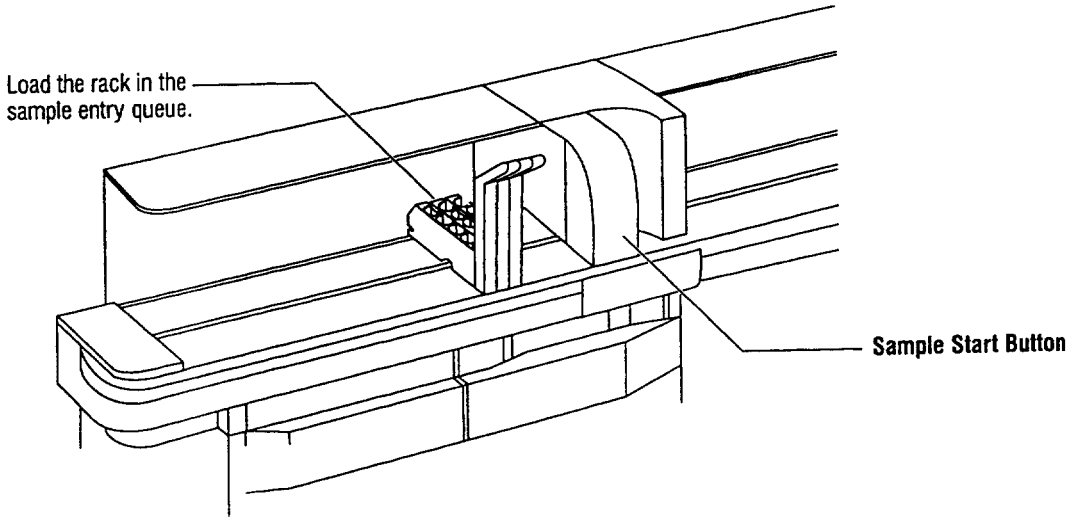

4. If the sample start button is off, press the button.
   The system moves the racks to the inprocess queue.
5. When testing completes, remove the racks from the sample exit queue.

Loading Stat Samples

Use this procedure to load Stat samples while the system processes the worklist.

87 118

1. If you are using the ACS:Centaur workstation to schedule tests manually, schedule the Stat sample as described in *Scheduling Patient Samples*, page 4-29.
2. Load the sample tube or cup in a rack.

   NOTE: All samples in the rack are performed at Stat priority.
3. Load the rack into the Stat entry.

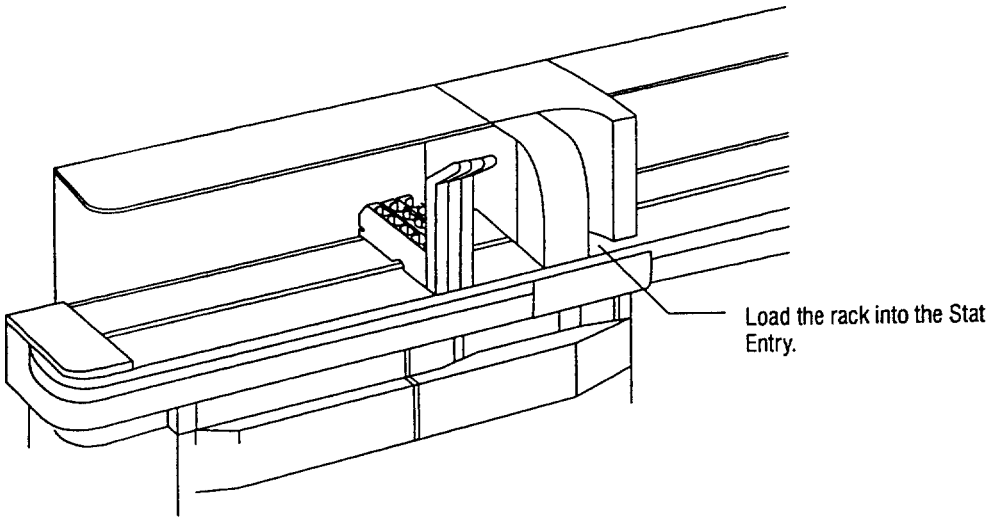

85 119

Replenishing Reagents

Reviewing Reagent Inventory

The reagent inventory allows you to determine if sufficient primary reagents and ancillary reagents are loaded to complete the scheduled tests. The number of scheduled tests and any reagent shortage are indicated on the Worklist–Reagent Inventory window.

Based on the inventory information, you can replace empty reagent or diluent packs, and add additional reagent or diluent packs. Based on the status messages, you can take corrective action.

1. At the workspace, select **Worklist**.
2. Select **Reagent Inventory**.

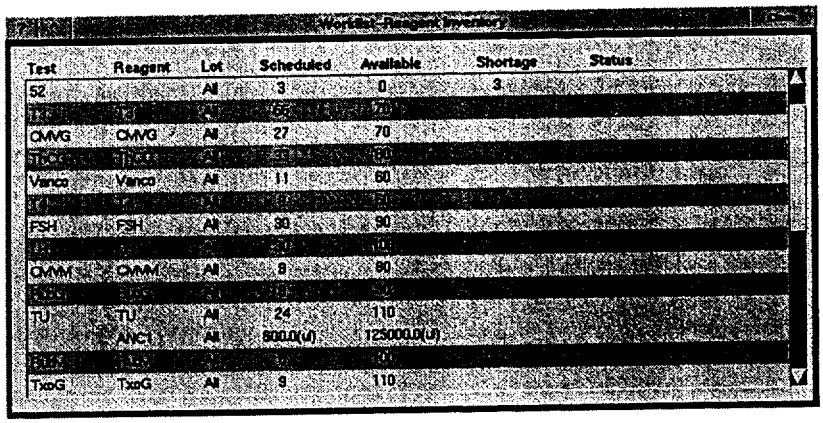

Test	Reagent	Lot	Scheduled	Available	Shortage	Status
52		All	3	0	3	
[illegible]	[illegible]	[illegible]	[illegible]	[illegible]		
CMVG	CMVG	All	27	70		
[illegible]	[illegible]	[illegible]	[illegible]	[illegible]		
Varico	Varico	All	11	60		
[illegible]	[illegible]	[illegible]	[illegible]	[illegible]		
FSH	FSH	All	30	90		
[illegible]	[illegible]	[illegible]	[illegible]	[illegible]		
CMVM	CMVM	All	9	80		
[illegible]	[illegible]	[illegible]	[illegible]	[illegible]		
TU	TU	All	24	110		
	ANC1	All	800.0(U)	125000.0(U)		
[illegible]	[illegible]	[illegible]	[illegible]	[illegible]		
TxoG	TxoG	All	9	110		

3. Verify that the system has the required reagents to complete the scheduled tests:
   - number of tests on the system for primary packs
   - volume for ancillary reagents

Reviewing Reagent Status

Reagent status displays the status of both primary and ancillary reagents.

- If you select this button and there is a warning condition associated with a primary reagent, the Status–Primary Reagent window is displayed.
- If you select this button and there is a warning condition associated with an ancillary reagent, the Status–Ancillary Reagent window is displayed.
- If you select this button and there is a condition associated with the primary and ancillary reagents, both windows appear on the workspace.

80 120

Reviewing Primary Reagent Status

At the Status–Primary Reagent window you can perform the following activities:

- review LEDs associated with each primary reagent
- access the Status–Details window, which shows the reagent, tests, and status associated with a primary pack
- activate or inactivate a primary pack
- remove a pack from the system
- schedule a calibration for any lot of the selected test that is in the notification interval
- activate or inactivate a test
- open the Reagent Inventory window
- open the Ancillary Reagent window

1. At the workspace, select **Reagent Status.**

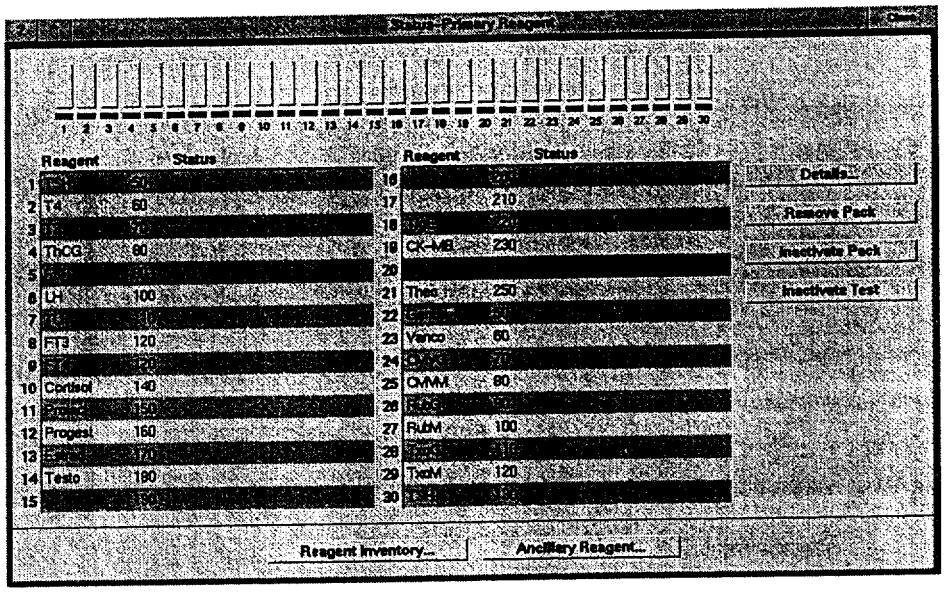

2. Review the reagent status and perform tasks as needed:
   - red indicates that the reagent requires immediate attention
   - yellow indicates that the reagent is currently sufficient but will need attention soon

? 3. You can select the online information button or refer to *Adding Primary Reagent Packs*, page 4-14, for detailed procedures.

9-0 121

Adding Primary Reagent Packs

1. At the workspace, select **Reagent Status**.

   NOTE: If the Status–Ancillary Reagents window appears, select **Primary Reagent** to display the status of the primary reagent packs.

2. Review the status of each reagent pack.
3. Open the primary reagent door.
4. If no position is open, or if the LED for the pack that you want to remove is lit, remove a primary pack.

If the system is . . .	*Then . . .*
idle	remove the reagent pack.
operating	a. At the Status–Primary Reagent window, select the reagent pack. b. Select **Remove Pack**. c. Select **Complete** or select **Now**. d. When the status changes to Removable, remove the reagent pack.

5. Install the primary reagent packs.

   NOTE: For optimal throughput, install packs of similar types next to one another.

6. Close the primary reagent door.
7. You can schedule a calibration:
   a. At the Status–Primary Reagent window, select the reagent pack.
   b. Select **Schedule Cal**.

   The system automatically schedules a calibration.

Reviewing Ancillary Reagent Status

At the Status–Ancillary Reagent window you can perform the following activities:

- display the status of the ancillary reagent entry
- access the Status–Ancillary Pack Details window, which shows the reagent, volume, and status associated with an ancillary reagent
- access the Status–Reagent Inventory window and the Status–Primary Reagent window
- remove an ancillary pack from the system

1. At the workspace, select **Reagent Status**.

91

2. Select **Ancillary Reagents.**

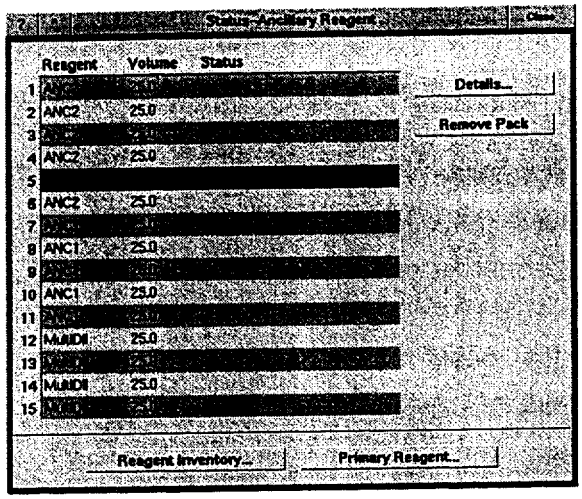

3. Review the reagent status and perform tasks as needed:
   - red indicates that the reagent requires immediate attention
   - yellow indicates that the reagent is currently sufficient but will need attention soon

? 4. You can select the online information button or refer to *Adding Ancillary Reagent Packs*, page 4-15, for detailed procedures.

Adding Ancillary Reagent Packs

1. At the workspace, select **Reagent Status.**
2. If the Status–Primary Reagent window opens, select **Ancillary Reagent.**
3. Determine if you need to replace a pack.
4. If no position is open, remove a pack:
   a. Select a pack.
   b. Select **Remove Pack.**
   c. If prompted, select **Complete** or select **Now.**
   d. Remove the pack from the ancillary reagent entry.
5. Install the appropriate pack in the ancillary reagent entry.

Replenishing Supplies

Reviewing Supplies Status

The background of the Supplies status button changes color to indicate the status of system supplies:

- yellow indicates that a supply requires attention
- red indicates that a supply is empty

You can select the Supplies button from the workspace to display the Status–Supplies window.

1. At the workspace, select **Supplies Status.**

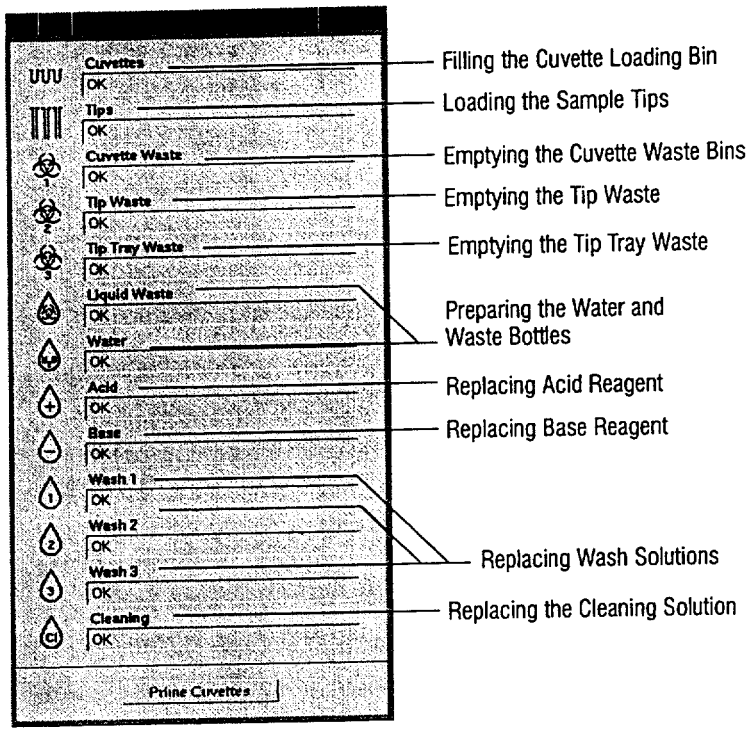

2. Review the supplies status:
   - yellow indicates that a supply requires attention
   - red indicates that a supply is empty
3. Visually inspect the levels of cuvettes, sample tips, and water. and
4. Empty the cuvette waste, the tip waste, and the liquid waste containers.
5. ? You can select the online information button or refer to Section 7, *Maintenance*, for detailed procedures.

93

Preparing the Water and Waste Bottles

Use this procedure to fill the water bottle and empty the waste bottle. You can perform this procedure while the system is analyzing samples.

BIOHAZARD: Refer to Appendix A, *Protecting Yourself from Biohazards*, for recommended precautions when working with biohazardous materials.

NOTE: For optimum system performance use fresh reagent water. Refer to Appendix E, *Reagents and Water Quality.*

1. Remove the water bottle:
   a. Pull out the waste and water drawer.
   b. Lift the lid above the water bottle.
   c. Disconnect the tubing from the top of the water bottle.
   d. Grasp the handle of the bottle and lift it up and out.

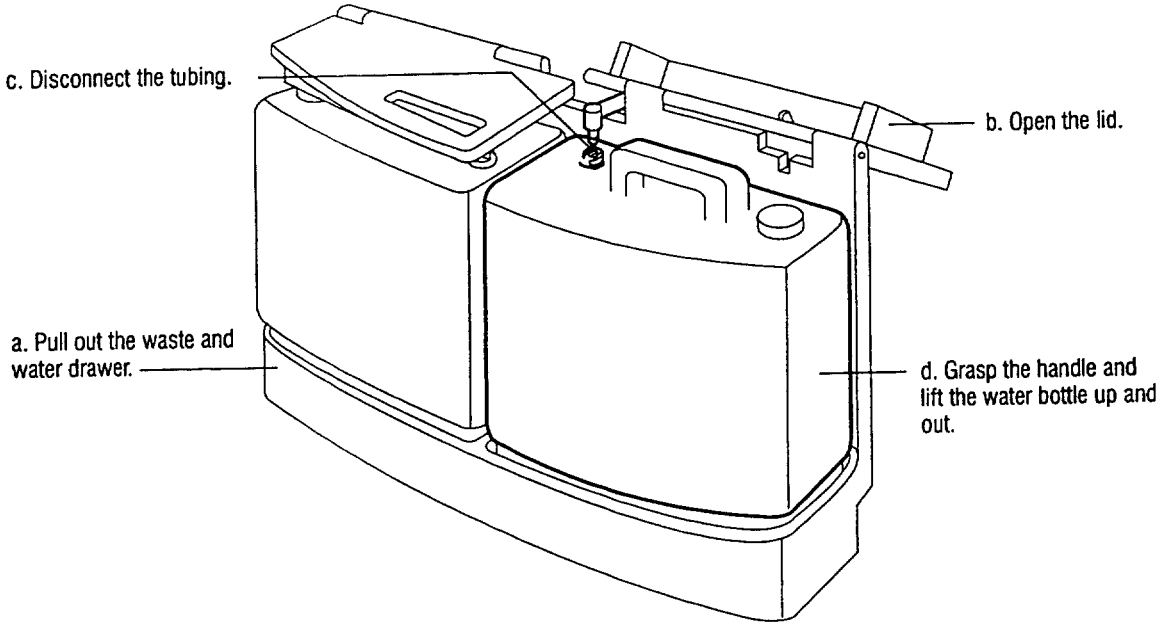

2. Prepare to clean the water bottle:
   a. Remove the cap from the top of the water bottle.
   b. Empty any remaining water from the water bottle.
   c. Clean the water bottle as described in *Cleaning the Water Bottle* in Section 7.
3. Fill a clean, dry water bottle with fresh reagent water.
4. Install the cap.
5. Install the water bottle on the system:

a. Return the bottle to the drawer.

b. Connect the tubing to the bottle.

c. Lower the lid.

6. Remove the waste bottle:

a. Lift the waste bottle lid.

CAUTION: To prevent dripping of biohazardous waste into the system, set the tubing on tissues or gauze.

b. Disconnect the tubing from the top of the waste bottle and then set it aside on tissues or gauze.

CAUTION: Handle the sensors gently because they are fragile.

c. Move the S clamp on the sensor aside, carefully remove the sensor from the bottle, and then set it aside on tissues or gauze.

Remove the waste bottle slowly to prevent splashing.

d. Grasp the handle of the bottle and lift it up and out.

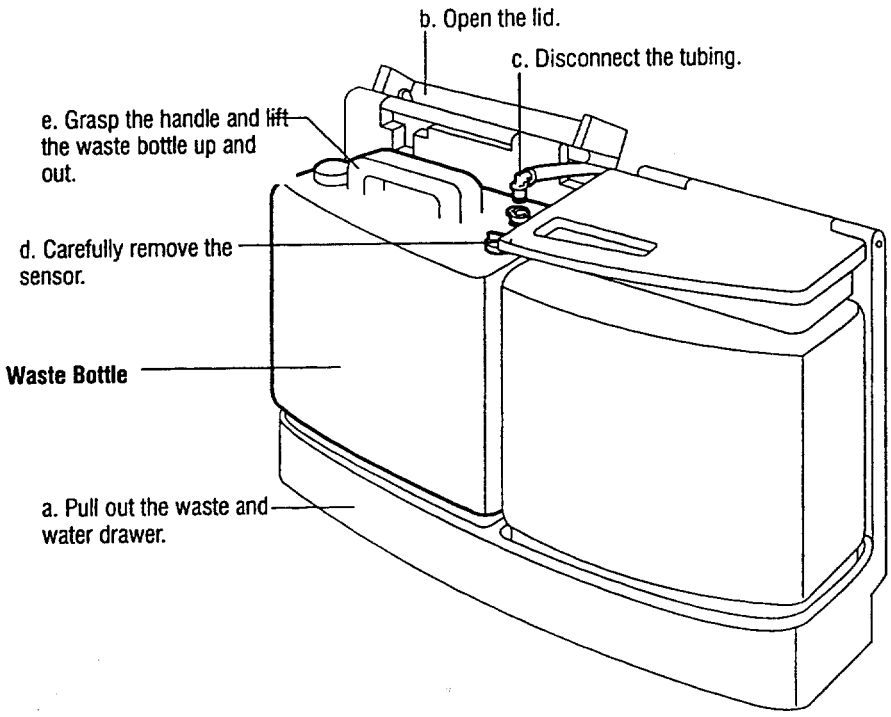

7. Empty the contents of the waste bottle into a container or drain approved for biohazardous waste disposal.

CAUTION: To prevent splashing of biohazardous waste, use the waste bottle valve to empty the contents of the waste bottle. Do not pour the contents from the top of the bottle.

8. If required, clean the waste bottle as described in *Monthly Cleaning Procedure* in Section 7.

CAUTION: To prevent a spill in the waste and water drawer, ensure that the waste bottle valve is fully closed by turning it to the left.

9. Install the waste bottle on the system:
   a. Close the waste bottle valve.
   b. Install the waste bottle in the drawer.
10. Clean the waste bottle main sensor.

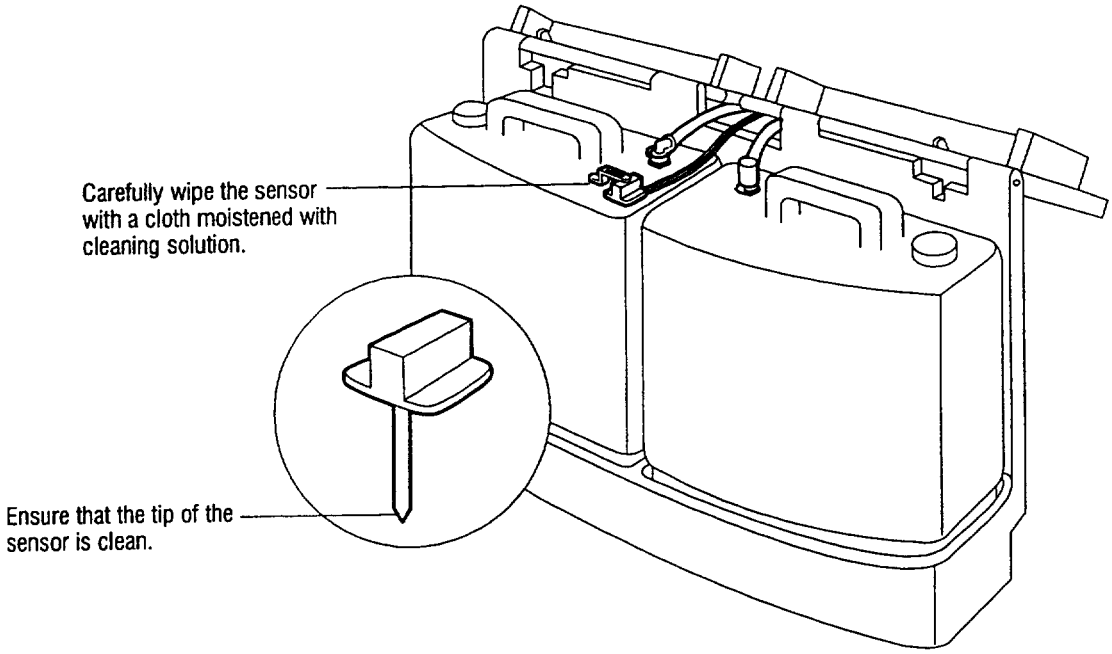

11. Carefully install the sensor in the waste bottle, and move the S clamp to cover the sensor.
12. Connect the tubing to the waste bottle.
13. Lower the lid.
14. Push in the waste and water drawer.

Adding Cuvettes

You can fill the cuvette loading bin at any time, even while the system is analyzing samples.

1. Open the cover.

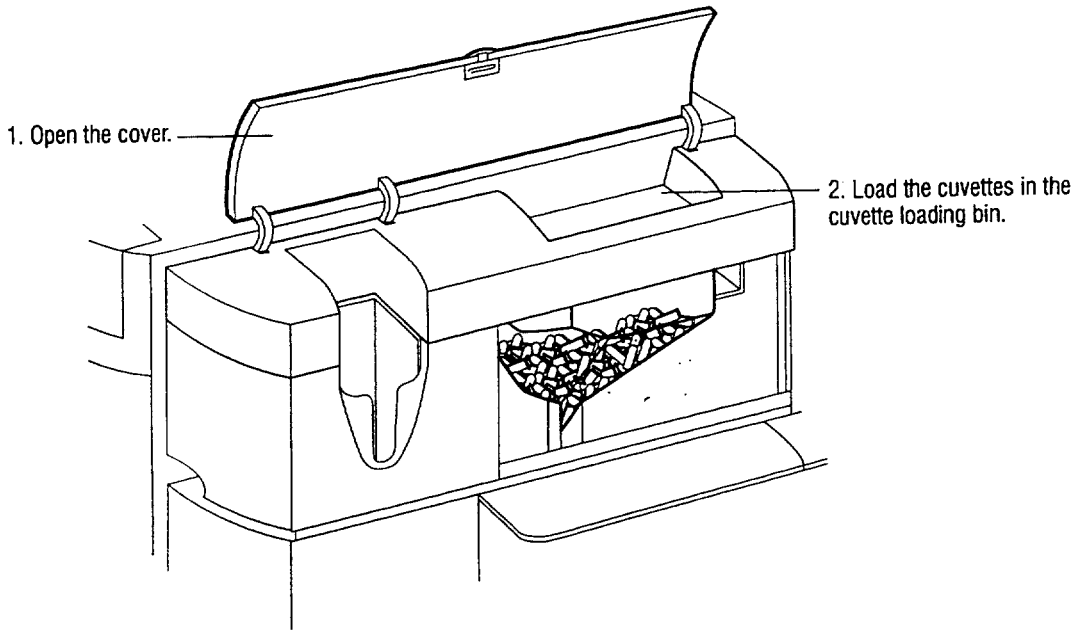

2. Load the cuvettes in the cuvette loading bin.

   You can load up to 4 bags of 250 cuvettes each. Avoid overfilling the cuvette loading bin.

3. Close the cover.

Adding Sample Tips

You can load sample tips at any time, even while the system is analyzing samples.

1. Open the cover.

91 128

2. Remove the protective cover from the bottom of the bundle.

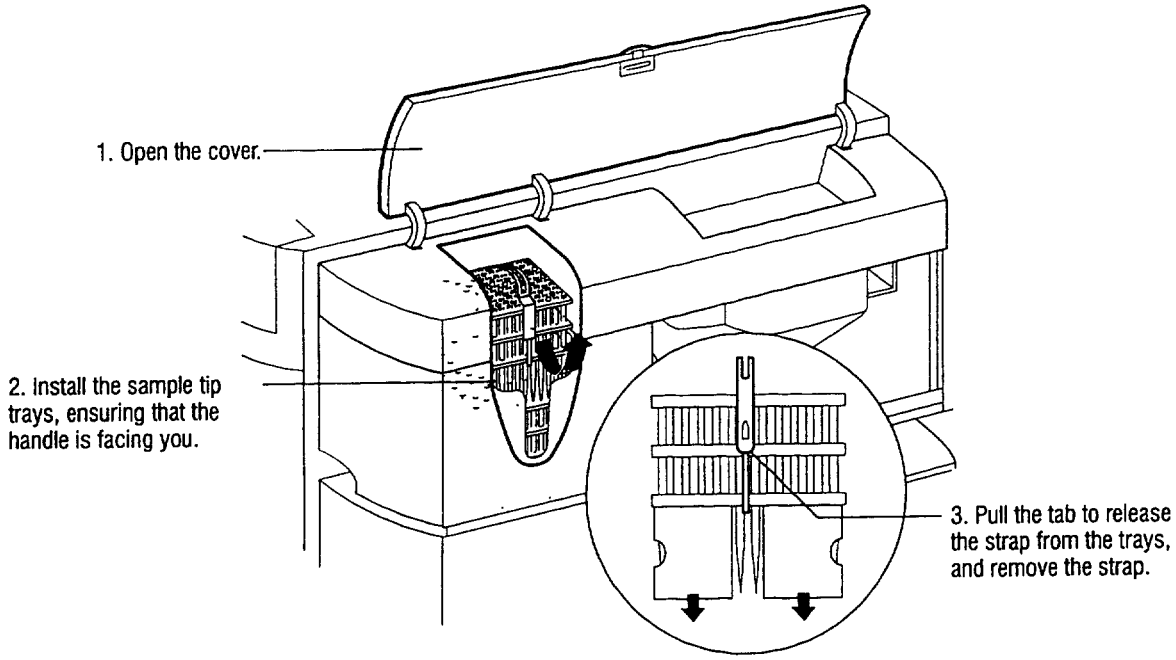

3. Install a bundle of sample tip trays, ensuring that the handle is facing you.
4. Pull the tab to release the strap from the trays, and remove the strap.
5. Close the cover.

Emptying the Waste Bins

You can empty the bins while the system is analyzing samples. Cuvettes and sample tips are collected in reservoirs while the bins are out of the system. The maximum capacity of the reservoirs is 20 cuvettes or tips, or approximately five minutes of operation.

BIOHAZARD: Refer to Appendix A, *Protecting Yourself from Biohazards*, for recommended precautions when working with biohazardous materials.

NOTE: The waste bins and liners are not identical. Ensure that the sample tip waste bin and liner are installed in the sample tip waste area. Ensure that the cuvette waste bin and liner are installed in the cuvette waste area.

1. Remove the sample tip waste bin:
   a. Open the right waste door.
   b. Grasp the handle of the sample tip waste bin and pull the bin out of the system.

2. Dispose of the contents of the bin in a container approved for biohazardous waste.
3. If the liner is dirty or damaged, remove the old liner and install a new liner.
4. If the bin is dirty, clean it:
   a. Pour a small amount of cleaning solution into the bin and swirl the solution inside the bin several times.
   b. Empty the waste bin into a container or drain approved for biohazardous waste.
   c. Repeat steps a and b.
   d. Rinse the inside and the outside of the bin with water.
   e. Dry the bin.
   f. Install the liner.
5. Install the waste bin, ensuring that the bin is pushed in completely.
6. Close the right waste door.
7. Remove the cuvette waste bin:
   a. Open the left waste door.

b. Grasp the handle of the cuvette waste bin and pull the bin out of the system.

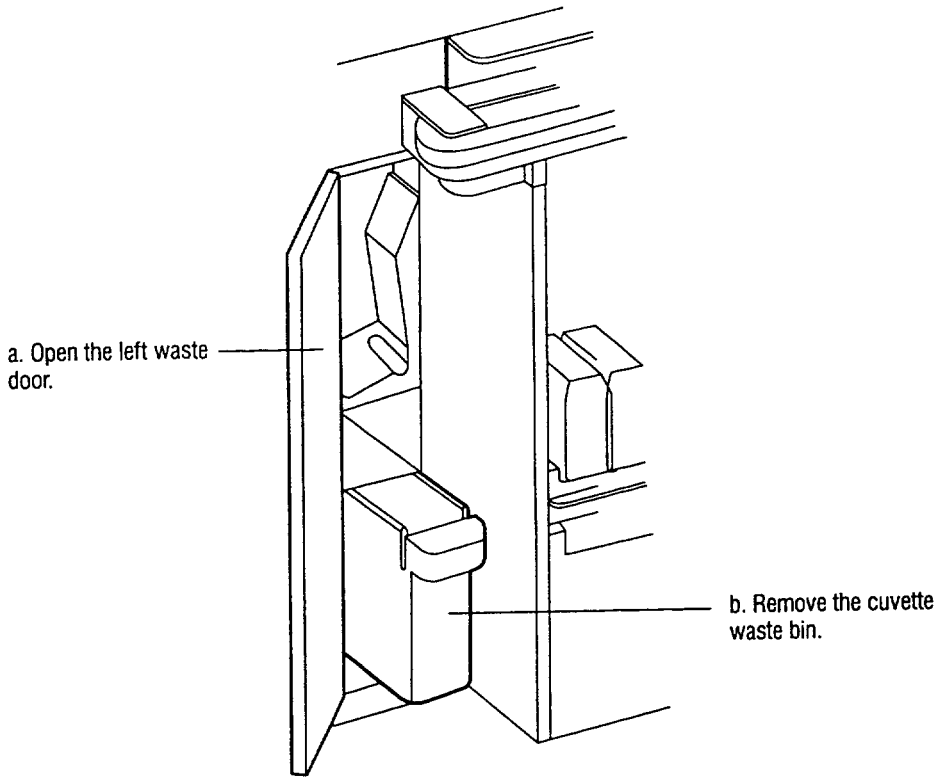

8. Dispose of the contents of the bin in a container approved for biohazardous waste.
9. If the liner is dirty or damaged, remove the old liner and install a new liner.
10. If the bin is dirty, clean it:
    a. Pour a small amount of cleaning solution into the bin and swirl the solution inside the bin several times.
    b. Empty the waste bin into a container or drain approved for biohazardous waste.
    c. Repeat steps a and b.
    d. Rinse the inside and the outside of the bin with water.
    e. Dry the bin.
    f. Install the liner.
11. Install the cuvette waste bin, ensuring that the bin is pushed in completely.
12. Close the left waste door.

Replacing the System Fluids

Use this procedure to replace acid reagent, base reagent, and wash 1, 2, and 3 after one month on the system, after expiration, or when they have insufficient volume. You can replace the system fluids while the system is analyzing samples. The system fluid reservoirs hold enough fluid to allow the system to continue to run for approximately 30 minutes.

NOTE: To manage lot numbers and to obtain optimum reagent performance, replace acid and base reagents at the same time.

1. Pull out the system fluid drawer.
2. Lift the lid for a system fluid bottle at the front edge.

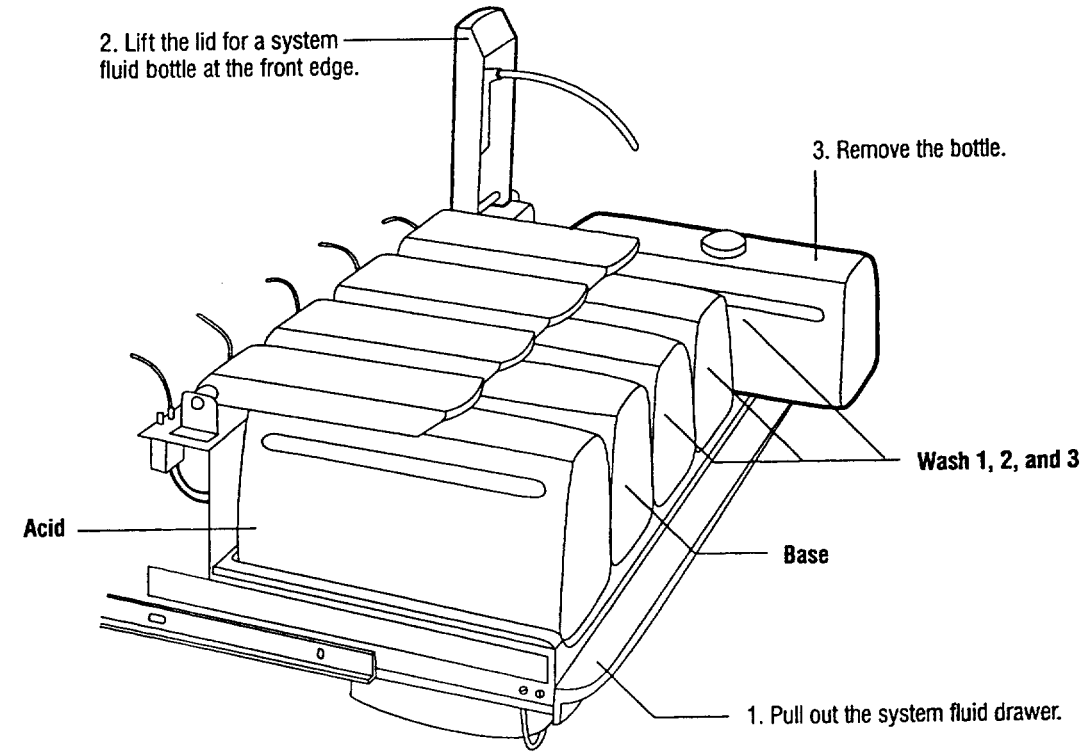

CAUTION: Do not touch the tubing or allow it to touch the bottom of the drawer.

3. Remove the bottle and discard the fluid in an approved fluid waste container and the bottle in an approved solid waste container.

   NOTE: Do not pool any fluid from used bottles.
4. Write today's date in the space provided on the bottle.
5. Place the bottle in the drawer and remove the cap.

   Do not dislodge the tubing.

101 130

6. Wipe the tubing with lint-free tissues or gauze.
7. Lower the lid onto the bottle, ensuring that the tubing is in the bottle.
8. Repeat steps 2 through 7 for each bottle.

   NOTE: Ensure that the lid fits correctly on the bottle. If not, ensure that the system fluid bottle is in the correct location for the system fluid.

9. Push in the system fluid drawer.

Reviewing Inprocess Samples

Inprocess sample status shows the status of samples in the inprocess queue or in the incubation ring.

The background of the Inprocess Samples Status button changes to yellow when a sample does not have a barcode or an SID, or when there is insufficient sample. Pressing the Sample Status button displays the Status–Samples window. The sample causing the warning or error condition appears in the table on the window.

At the Status–Samples window you can perform the following activities:

- view all samples, exceptions, calibrators, status controls, or aspirated samples
- sort samples by time, rack, SID, status errors, or scanned date
- search for an SID
- search for rack
- review the status of the samples in the exit queue
- request to remove a rack from the system
- access the Demographics window, Schedule window, and Worklist Summary window

Use this procedure to review the status of the inprocess samples while the system processes the worklist.

NOTE: You can add or delete the tests and profiles for samples after the first sample in the rack has entered the inprocess queue and until the system aspirates the sample. However, you cannot edit a batch after the first sample in the batch has entered the inprocess queue.

103

1. At the workspace, select **Inprocess Samples Status.**

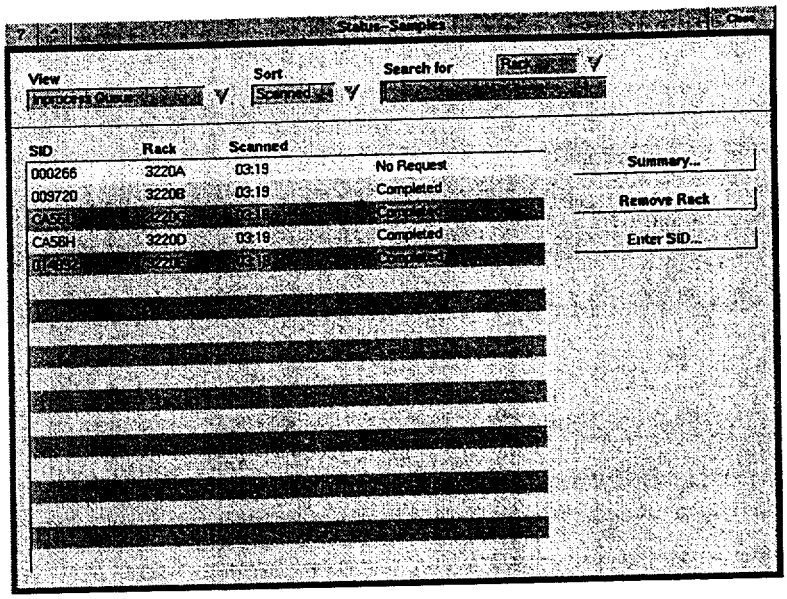

2. Review the status of the inprocess samples.
3. You can edit a test request:
   a. Select the sample for the request you want to edit.
   b. Select **Summary.**
   c. Select a sample or a test.
   d. Select:
      - **Delete** to delete it from the worklist, and then select **Yes.**
      - **Schedule** to add it to the worklist, and then select **Save.**
4. You can edit patient demographics:
   a. Select the sample.
   b. Select **Summary.**
   c. Select **Schedule.**
   d. Select **Demographics.**
   e. Edit the demographic information, as described in *Entering Patient Demographics*, page 4-30.
   f. You can select **Comments** to enter up to three sample comments, and then select **Save.**
   g. Select **Save** at the Worklist–Demographics window.

Modifying the Worklist

You can modify the worklist:

- Reviewing the Worklist Summary
- Querying an LIS
- Adding patient requests
- Entering patient demographics
- Adding Stat requests
- Adding batch requests
- Adding calibrator requests
- Adding control requests
- Entering dilution options
- Entering reagent options
- Editing requests
- Editing batch requests
- Deleting requests

Reviewing the Worklist Summary

Use the Worklist–Summary window as the primary window to operate the system.

You can locate specific information by selecting the appropriate View and Sort:

- The View that you select controls the results that the system displays. For example, if you select Calibrators, the system displays the calibration results. If you select All, the system displays all results.
- The Sort that you select controls the order in which the system displays results. For example, if you select SID, the system sorts and displays the results in ascending SID order.

You can perform the following tasks at Worklist Summary by selecting the View, the Sort, and the specified titlc for the third column:

Task	View	Sort	Third Column
Checking the time that a sample result will be available	Pending Tests	Scanned	Time Due
Reviewing sample results	Current Results	SID	Conc
Reviewing infectious disease sample results	Current Results	SID	Index

1 U5 130

Checking QC results	Controls	SID	Conc
Checking calibrator results	Calibrators	SID	Conc
Checking Stat sample results	Stat	SID	Conc
Assigning a calibration	Stored RLU		
Reviewing sample results when all tests are completed	Historical		

Querying an LIS

Use this procedure to schedule the worklist if your system is set up for manually-initiated queries.

1. At the workspace, select **Worklist.**
2. Select **Summary.**
3. Select **LIS Communications.**
4. Select **Receive Requests from LIS.**
5. You can specify a starting date and an ending date.
6. Select **Continue.**

Adding Patient Requests

1. At the workspace, select **Worklist.**
2. Select **Schedule.**

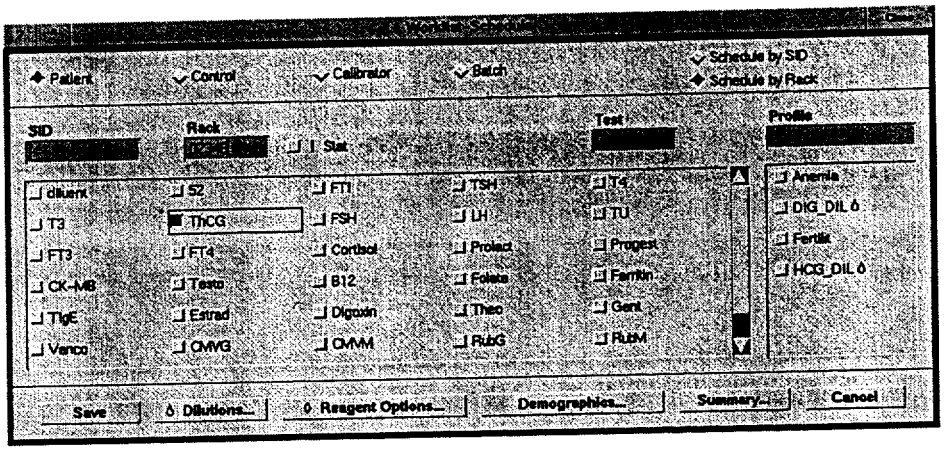

3. Specify either **SID** or **Rack**,if required.
4. Select **Stat** to run the sample before other tests, if appropriate.
5. Enter or select the profiles or the tests.

106 131

6. You can select the following options:
   - You can select **Dilutions** and then specify dilution information, as described in *Entering Dilution Options*, page 4-34.
   - You can select **Reagent Options** and then specify a specific reagent lot or pack as described in *Entering Reagent Options*, page 4-35.
   - You can select **Demographics** and then enter demographic information, as described in *Entering Patient Demographics*, page 4-30.
7. Select **Save**.

Entering Patient Demographics

Use this procedure to enter patient demographic information. Entering patient demographic information is optional. You can enter patient demographic information at the following times:

- as you schedule samples in the worklist
- after you create the worklist
- while tests are running

1. At the Worklist–Schedule window, schedule the sample, if required.
2. Select **Demographics**.
3. Enter the demographic information.

   The information appears in the demographic fields on the window and on collated patient reports.

Field Name	Description
SID	Sample identifier. You can enter up to 13 alphanumeric characters.
Rack	Rack identifier. You can enter up to 5 alphanumeric characters.
PID	Patient identifier. You can enter up to 13 alphanumeric characters.
Name	Patient's name. You can enter up to 19 alphanumeric characters.
DOB	Patient's date of birth. Use the dd mmm yyyy format (for example: 11 Aug 1975). Use the following abbreviations for months: Jan, Feb, Mar, Apr, May, Jun, Jul, Aug, Sep, Oct, Nov, Dec.
M or F	Patient's gender. You can select M (male) or F (female).

107 138

Field Name	Description
Location	Location of patient in the facility. You can enter up to 10 alphanumeric characters.
Physician	Physician's name. You can enter up to 12 alphanumeric characters.

4. You can select **Comments** to enter up to three comments and then select **Save.**

NOTE: If you finish your changes to the demographics and you change the Rack ID before you save your changes, then as soon as you press **Enter**, the system asks if you want to save the changes you made for the previous Rack ID.

5. Select **Save** at the Worklist–Demographics window.
6. If you are entering new demographic data, select **Save** at the Worklist–Schedule window.

Adding Stat Requests

Schedule a sample as a Stat to run the sample before other tests on the worklist.

1. At the workspace, select **Worklist.**
2. Select **Schedule.**
3. Specify either **SID** or **Rack** if required.
4. Select **Stat.**
5. Enter or select the appropriate profiles or tests.
6. You can select the following options:
   a. You can select **Dilutions** and then specify dilution information, as described in *Entering Dilution Options*, page 4-34.
   b. You can select **Reagent Options** and then specify a specific reagent lot or pack as described in *Entering Reagent Options*, page 4-35.
   c. You can select **Demographics** and then enter demographic information, as described in *Entering Patient Demographics*, page 4-30.
7. Select **Save.**

Adding Batch Requests

Use this procedure to schedule a batch of patient samples that require the same tests.

1. At the workspace, select **Worklist.**
2. Select **Schedule.**

188 139

3. Select **Batch.**

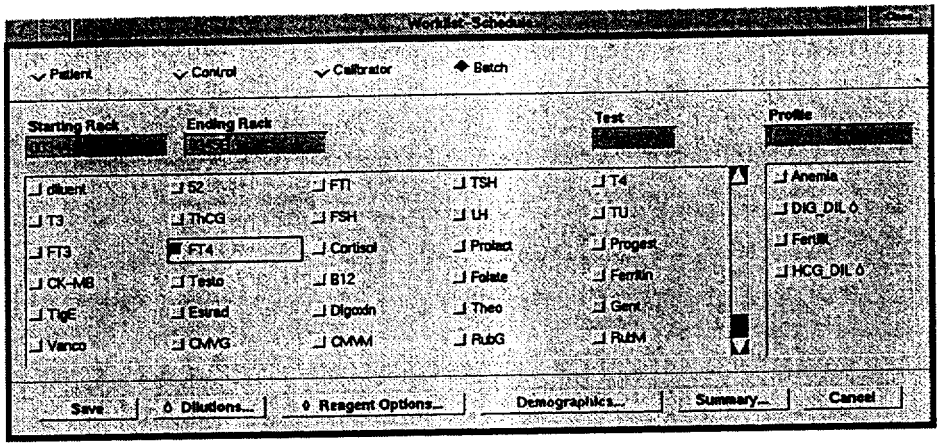

4. Enter the number and position of the starting rack in **Starting Rack.**

   Rack numbers contain a four-digit rack identifier followed by a letter from A to E, which indicates the sample position in the rack.

5. Enter the number and position of the ending rack in **Ending Rack.**

6. Enter or select the appropriate profiles or tests.

7. Select **Save.**

   The system performs the requested tests on all samples loaded between the starting rack and the ending rack. You can load the racks in any order.

Adding Calibrator Requests

1. Determine which tests require a calibration:
   a. At the workspace, select **Calibration.**
   b. Select **Summary.**
   c. Select **Status** in Sort.
   d. Review the calibration status and due dates.
2. At the workspace, select **Worklist.**
3. Select **Schedule.**

105 140

4. Select **Calibrator.**

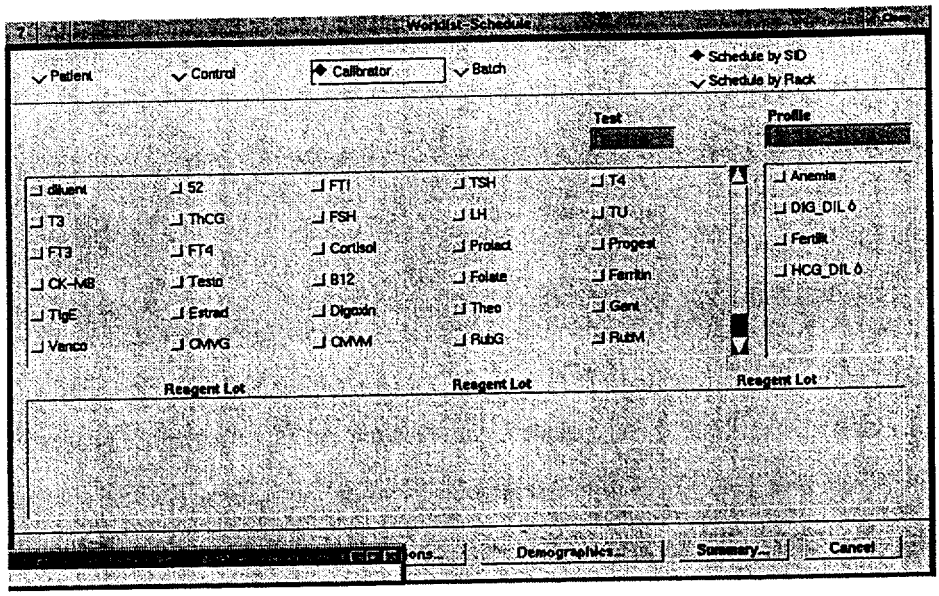

5. Enter or select the appropriate profiles or tests.
6. Select one or more calibrator names from the list. You can schedule multiple calibrators at one time.
7. You can accept the default lot or select a lot from the list.

   The system displays the assigned SIDs for the low and high calibrators.
8. You can specify the **Rack** for the low and high calibrators.

   If you do not specify the Rack, the system assigns the Rack when you load the calibrators.
9. You can specify reagent options if appropriate.
10. Select **Save.**

Adding Control Requests

To monitor system performance and chart trends, Chiron Diagnostics recommends that you run a minimum of three levels of QC material at least once during each 8 or 24 hour shift, depending on the assay. If your established QC program requires more frequent use of controls, then follow those procedures. Refer to the assay product inserts for specific QC recommendations for each assay.

1. At the workspace, select **Worklist.**
2. Select **Schedule.**

3. Select **Control.**

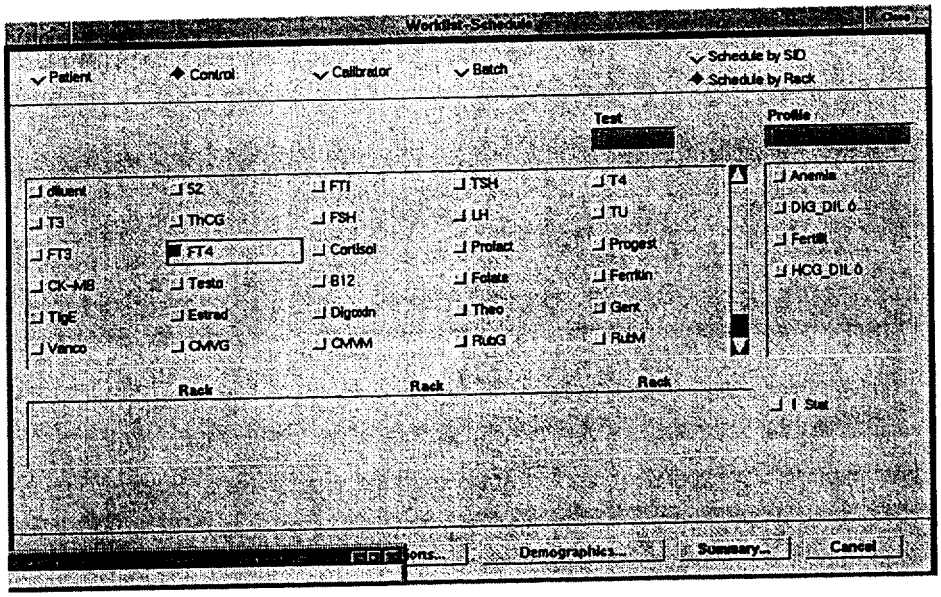

4. Enter or select the appropriate profiles or tests.
5. Select a control lot and SID.
6. You can select the following options:
   a. You can select **Stat.**
   b. You can specify the **Rack.**
   c. You can select **Dilutions** and then specify dilution information as described in *Entering Dilution Options*, page 4-34.
   d. You can select **Reagent Options** and then specify a specific reagent lot or pack as described in *Entering Reagent Options*, page 4-35.
7. Select **Save.**

Entering Dilution Options

Use this procedure to enter the dilution information for samples on the worklist.

1. At the Worklist–Schedule window, schedule the sample, if required.

2. Select **Dilutions.**

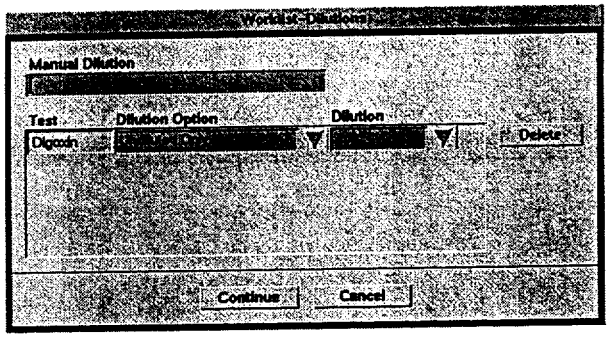

3. If you diluted the sample before placing it in the rack, enter the dilution factor in **Manual Dilution.**
4. If you want the system to dilute the sample, select a dilution option:
   - Undiluted Only if the sample does not require dilution
   - Diluted Only if you are certain that the sample requires dilution
   - Undiluted & Diluted if you do not know whether the sample requires dilution
   - Dilute If Over (performs test on undiluted sample first) if the sample may require dilution above a value
5. Select a dilution factor in **Dilution.**
6. Select **Continue.**
7. Select **Save** at the Worklist–Schedule window.

Entering Reagent Options

1. At the Worklist–Schedule window, schedule the sample, if required.
2. Select **Reagent Options.**
3. For each test that requires specific reagents, you can select the reagent options:
   a. Select a Lot.
   b. Select a Pack ID.
   c. Select an ancillary reagent lot.
   d. If appropriate, select a second ancillary reagent lot.
   e. Select a Diluent.
   f. Enter the number of Replicates.
4. Select **Continue.**
5. Select **Save** at the Worklist–Schedule window.

Editing Requests

1. At the workspace, select **Worklist.**
2. Select **Summary.**

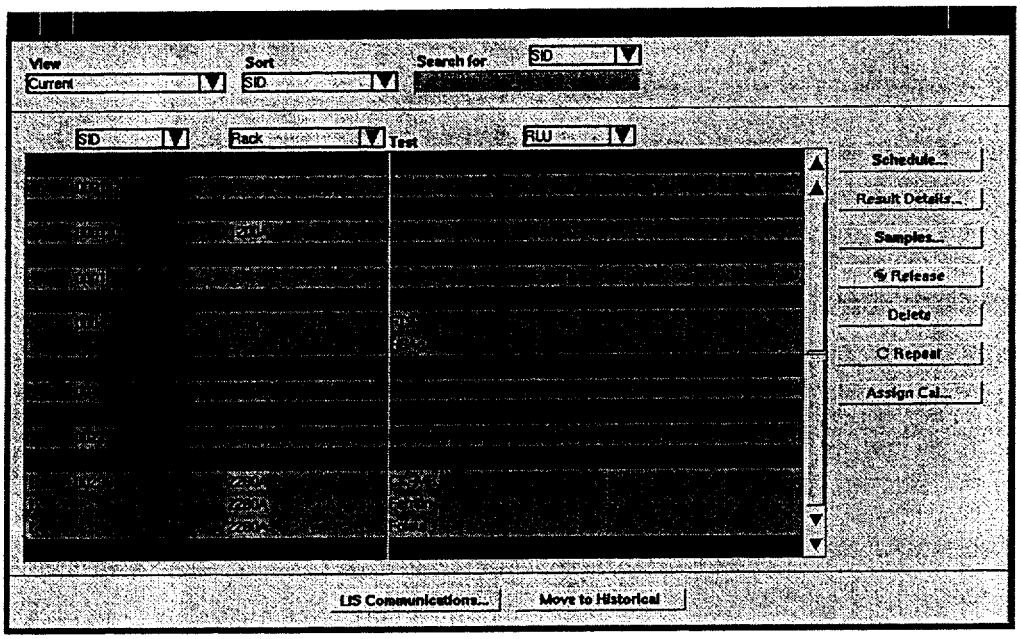

3. Select a sample or a test.
4. Select:
   - **Delete** to delete the sample from the worklist or to delete an individual test, select the option you want, and then select **Yes.**
   - **Schedule** to add or delete tests, modify dilutions, specify reagent lots or packs, or modify demographics, and then select **Save.**

Editing Batch Requests

NOTE: You cannot edit a batch after the first sample in the batch has entered the inprocess queue.

1. At the workspace, select **Worklist.**
2. Select **Summary.**
3. Select **Pending Batches** in View.
4. Select a batch.
5. Select **Schedule.**

116

6. Select:
   - **Delete** to delete it from the worklist, and then select **Yes**.
   - **Schedule** to add it to the worklist, and then select **Save**.

   NOTE: The new test request overrides the existing test request.

Deleting Requests

1. At the workspace, select **Worklist**.
2. Select **Summary**.
3. Select a sample or a test.
4. Select **Delete**.
5. Select **Yes**.

114

Evaluating the Results

Use this section to evaluate and manage the results:

- review the results
- edit the results
- send the results to an LIS
- print the results

Reviewing Results

Use this procedure to review the results for controls and patients.

1. At the workspace, select **Worklist**.
2. Select **Summary**.
3. You can search for the sample:
   a. Select **SID** in **Search for**.
   b. Enter the SID in **Search for SID**.
4. Review the results.
5. You can display the result details:
   a. Select the result.
   b. Select **Result Details**.
6. You can review historical results:
   a. At the workspace, select **Historical Results**.
   b. Review the results.

Repeating a Test

The following table lists the conditions under which the system repeats samples and adds remarks. Refer to *Defining Repeats* in Section 9 for more information about setting up sample repeats.

If the result is . . .	*Then the system . . .*
below the lowest Master Curve point	repeats the sample if a below check range limit is defined for the test.
below the check range	repeats the sample if a below check range limit is defined for the test and adds a flag to the result.
above the normal range	does not repeat the sample, but adds a flag to the result.
below the normal range	does not repeat the sample, but adds a flag to the result.
not calculated due to noise, poor signal, floating point error, or invalid dark count	repeats the sample and adds a flag to the result.

1. At the Worklist–Summary window, select a sample on the left side of the worklist or a test on the right side of the worklist.
2. Select **Repeat.**

Editing Results

1. At the workspace, select **Worklist.**
2. Select **Summary.**
3. You can search for a sample:
   a. Select **SID** in **Search for.**
   b. Enter an SID in **Search for SID.**
4. Select a sample.
5. Select **Result Details.**
6. Select a test.
7. Select **Edit Result.**
8. Select **Delete Result.**
9. Select **Yes.**
10. Select **Save.**

Sending Results to an LIS

Use this procedure to manually send results to an LIS if automatic transfer of results is not defined for your system.

1. At the workspace, select **Worklist.**
2. Select **Summary.**
3. Select **LIS Communications.**
4. Select **Send All Results Except Results On Hold.**
5. You can enter a starting date and an ending date.
6. Select **Continue.**

   The system sends to the LIS all results that match the criteria.

Printing Sample Results

If your system has a printer, you can print collated patient sample reports with a report heading that identifies your hospital or laboratory.

1. At the workspace, select **Worklist.**
2. Select **Summary.**
3. Select the appropriate sample and report.

If you want to . . .	*Then . . .*
print a report for a sample	select a sample.
print a list of pending tests for scheduled samples	a. Select **View.** b. Select **Pending Tests.**
print a historical results report for a sample	a. Select **Historical.** b. Select a sample.
search for a sample and then print a report	a. Select **SID** in **Search for.** b. Enter the SID in **Search for SID.**
print reports for all samples on a rack	a. Select **Rack** in **Search for.** b. Enter the Rack in **Search for Rack.**

print the results for scheduled samples	a. Select **View**. b. Select **Results**.
print a report for all samples on the worklist	a. Select **View**. b. Select **All**.
print a report for all tests performed on a patient	a. Select **PID** in **Search for**. b. Enter the PID in **Search for PID**.

4. At the workspace, select **Print**.

Deleting Selected Sample Results

CAUTION: When you delete results, the system permanently removes the results from the database. Refer to *Archiving Results*, page 4-43, to copy the results to diskettes before deleting them from the database.

1. At the workspace, select **Setup**.
2. Select **Data Administration**.
3. Select **Delete**.
   The Setup–Data Administration Options window opens.
4. Complete the appropriate tasks:

If you want to . . .	*Then . . .*
specify a starting date	enter a starting date in the dd mmm yy format.
specify an ending date	enter an ending date in the dd mmm yy format.
delete current results	select **Current** in Results.
delete current and historical results	select **Historical and Current** in Results.
delete historical results	select **Historical** in Results.
delete all results	select **All**.
delete pending requests in the worklist	select **All Pending**.
delete results in the worklist	select **All Resulted**.

118

If you want to . . .	*Then . . .*
delete printed results	select **All Printed**.
delete results that were sent to the LIS	select **All Sent**.

5. Select **Continue**.
6. Select **Eject Diskette**.
7. Remove the diskette from the drive.

Deleting Worklist Results

CAUTION: When you delete results, the system permanently removes the results from the database. Refer to *Archiving Results*, page 4-43, to copy the results to diskettes before deleting them from the database.

1. At the workspace, select **Setup**.
2. Select **Data Administration**.
3. Select **Worklist**.
4. Select **Delete**.
5. Select **Yes** when prompted.

   The system deletes the results.

119

Maintaining Data Files

Use these procedures to maintain data files:

- archive results based on selected criteria
- retrieve archived results from a diskette and review them on the system

For optimum efficiency in locating results and managing patient data, Chiron Diagnostics recommends that you delete results from the database at regular intervals. If you want to keep copies of results, you can use the archiving options to copy the results to diskettes before deleting them from the database.

Archiving Results

Archiving is the process of organizing and storing the results on double-sided, high-density diskettes (1.44 megabytes).

1. At the workspace, select **Setup**.
2. Select **Data Administration.**
3. Select an area.
4. Select the results that you want to archive.

If you want to archive . . .	*Then select . . .*
all results except worklist results	All (Except Worklist).
worklist results	Worklist.
calibration data, QC data, and test definitions	either Quality Control, Calibration Data, or Test Definitions because they are backed up as a set.

5. Insert the diskette in the drive.

   NOTE: Formatting a diskette erases any existing data.
6. Select **Format Diskette** if the diskette is unformatted.

   The system formats the diskette, which takes a few minutes.
7. Select **Back Up.**
8. Select **Eject Diskette.**
9. Remove the diskette from the drive.

120

Restoring Archived Results

NOTE: You cannot edit archived results that are stored on diskettes.

1. At the workspace, select **Setup**.
2. Select **Data Administration**.
3. Insert the diskette containing the results you want to review in the diskette drive.
4. Select the archived results that you want to restore.

If you want to archive . . .	*Then select . . .*
all results except worklist results	All (Except Worklist).
calibration data, QC data, and test definitions	either Quality Control, Calibration Data, or Test Definitions because they are backed up as a set.

NOTE: You cannot perform any operations while the system is restoring results from a diskette.

5. Select **Restore**.
6. Select **Eject Diskette**.
7. Remove the diskette from the drive.

121 150

5 Calibration

Quantitative Assays **5-3**
Principle 5-3
Establishing a Master Curve 5-3
Two-Point Calibration 5-5
Calibration Evaluation Ranges 5-6
What Are Calibration Evaluation Ranges (CERs)? 5-6
Why Use CERs? 5-6
Objectives of the Calibration Process 5-6
How Does CER Work? 5-7
Reference Serum Calibration for T Uptake 5-8

Qualitative Assays **5-9**
Principle 5-9
Calculating a Cutoff Point 5-9
Establishing a Master Curve 5-10
Two-Point Calibration 5-10
Calculating the Result 5-11

Defining Calibration **5-12**
Defining a Master Curve 5-12
Defining Calibrator Assigned Values 5-13

Performing Calibrations **5-15**
Verifying Calibration Status and Due Dates 5-15
Scheduling Calibrators 5-16
Reviewing Calibration Data 5-17
Reviewing Historical Calibration Data 5-18
Excluding a Calibration Result 5-19
Waiving an Expired Calibration 5-20
Accepting an Invalid Calibration 5-20
Printing Calibration Data 5-20

1 of 2 13

123 - 154

Quantitative Assays

This section describes the calibration methods that the ACS:Centaur system uses to calibrate the quantitative assays:

- Master Curve and two-point calibration system for quantitative (competitive and sandwich binding) assays
- reference serum calibration (ACS T Uptake assay)

Calibration of the system minimizes variation:

- between lots
- between systems

Principle

The ACS:Centaur system uses a Master Curve and a two-point, user-initiated calibration to calibrate quantitative ACS assays. The Master Curve and the two-point calibration method eliminate the need to measure a full standard curve or to include calibration with each assay. The system stores the calibration for the interval specified in the assay product inserts. You do not need to calibrate an assay until:

- the calibration interval expires
- you use a new lot of assay reagents or calibrators
- your controls are out of range

Establishing a Master Curve

Before releasing a new lot of reagents, full standard curves are performed for each assay on multiple systems over several days. The analyte concentration and RLU pairs define the shape of the Master Curve for a particular lot of assay reagents.

Each ACS assay kit includes a Master Curve card that lists the analyte concentration and relative light units (RLUs) for each Master Curve point.

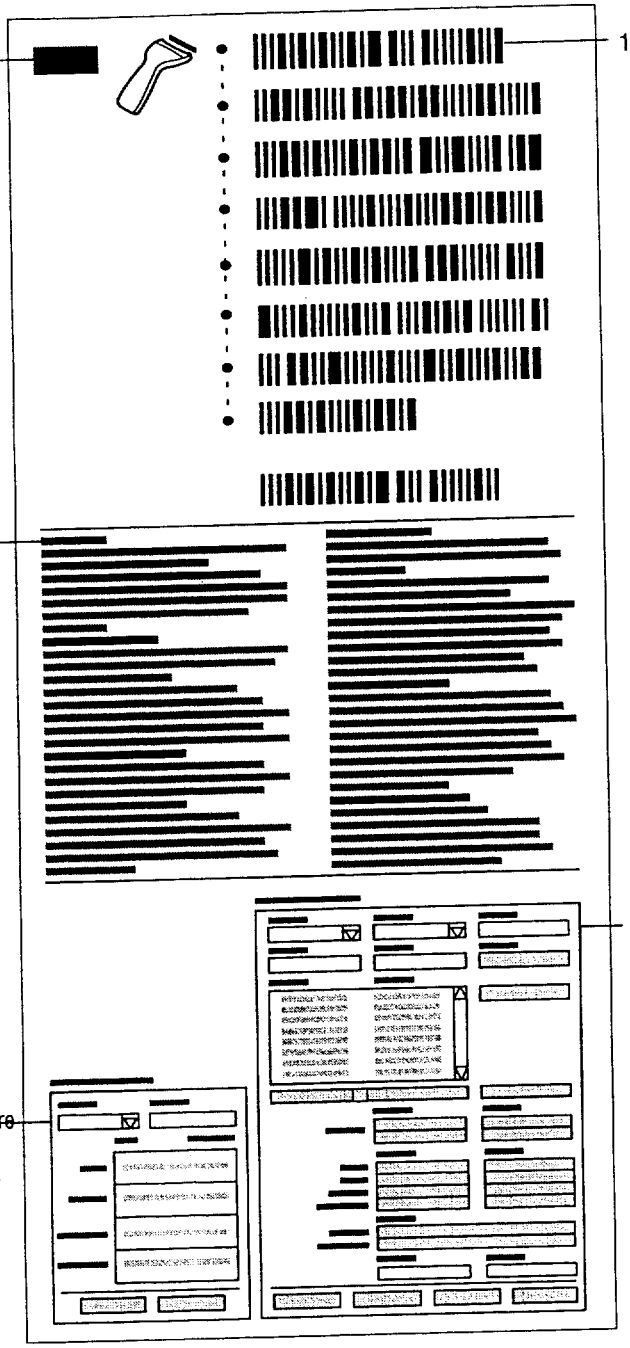

125 156

The Master Curve for a competitive binding assay has a negative slope, which indicates that the analyte concentration is inversely proportional to the measured RLUs.

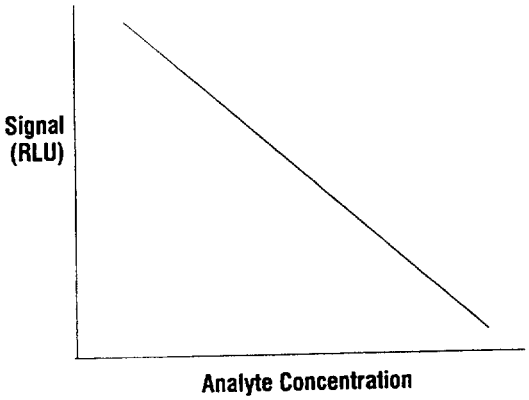

The Master Curve for a sandwich assay has a positive slope, which indicates that the analyte concentration is directly proportional to the measured RLUs.

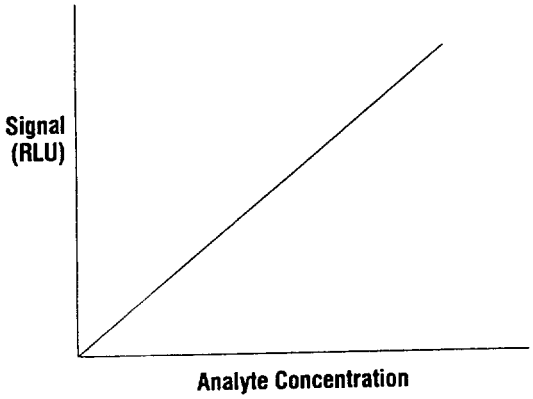

Two-Point Calibration

Each ACS calibrator kit includes a Calibrator Assigned Value card that provides the calibrator values for each analyte in the low and high calibrators.

These calibrators may produce different RLU values on different systems due to system-to-system variability, particularly due to the sensitivity of the photomultiplier tube (PMT). The Master Curve is validated on your system by assaying the high and low calibrators for two known analyte concentrations. Your system determines the mathematical relationship between the calibrator RLUs that your system measured and the RLUs you entered from the Master Curve card, and then converts the RLUs to Master Curve RLUs.

When a patient sample is assayed, the system measures the RLU value and then converts it to a Master Curve RLU value. The Master Curve RLU value is matched to its corresponding analyte concentration using the Master Curve. The analyte concentration is then recorded as the patient sample result.

Calibration Evaluation Ranges

What Are Calibration Evaluation Ranges (CERs)?

CERs are metrics that are based on high and low calibrator RLUs and the Master Curve. CERs are used to evaluate the integrity of a calibration.

Why Use CERs?

- CERs increase the confidence in the calibration data generated by the system.
- CERs provide information about the integrity of a calibration beyond the generated QC.
- CERs reduce the instances of borderline calibrations that might not hold for the specified calibration interval.
- CERs minimize lost assays due to controls drifting out of range. An optimized calibration decreases total % CVs.

Objectives of the Calibration Process

- To provide specific calibration acceptance criteria
- To evaluate calibrations on their own merit separate from evaluation of quality control material by checking the quality of a calibration at the time of calibration
- To preserve test results that follow a failed calibration
- To provide detailed information to troubleshoot a failed calibration
- To decrease the need for recalibrations and determine when recalibration is necessary
- To provide onboard historical calibration information
- To edit a replicate RLU of a particular calibration

Term	Definition
Slope and intercept	relate the signal of the calibrated system to the signal of the factory generated curve at the two calibrator values. The slope and intercept are used to adjust the signal intensity of the observed values to the Master Curve values. For example, if the slope equals two and the intercept is zero, then the Master Curve RLUs are approximately two times the ACS:Centaur system RLUs.
Ratio	compares the high calibrator signal in RLUs to the low calibrator signal in RLUs.
Low Cal deviation	measures how well the low calibrator maps onto the Master Curve.
High Cal deviation	measures how well the high calibrator maps onto the Master Curve.
Defined Ranges	are specified ranges for each assay that are defined by the manufacturer. CER values must fall within the defined ranges. The ranges are entered into the system from the Master Curve card.
Observed Ranges	compare CER values specific to a calibrator and reagent lot combination for an individual system. The ranges are established by the system after the lot information has been entered and four calibrations have been performed. The observed ranges are updated after each subsequent calibration.
Calibrator CV	or coefficient of variation is a measure of the precision of the low and high calibrator replicates and is calculated from the RLUs.

How Does CER Work?

1. The CER checks the RLU precision of low and high calibrator replicates (CV).
2. The CER checks the slope, ratio, and low and high calibrator deviations against a defined range for the specific assay.
3. The CER checks the slope, ratio, and low and high calibrator deviations against an observed range after the fourth calibration of a reagent lot and calibrator lot combination. The CER is calibrator and reagent lot specific.
4. The CER determines if renormalization of the current calibration is necessary.
   - If so, then a new slope and intercept are calculated.
   - If not, then the previous calibration expiration is extended using the same interval.

5. RLUs from an invalid calibration can be evaluated using the last valid calibration or the next valid calibration for that assay.

Reference Serum Calibration for T Uptake

The ACS T Uptake assay provides an indirect measure of the number of unoccupied binding sites on thyroxine-binding proteins in a patient sample. In this assay, a direct relationship exists between the RLUs detected by the system and the number of binding sites available on the thyroxine-binding proteins. This results in a higher T Uptake ratio when there are fewer free binding sites, and a lower ratio when there are more free binding sites.

A Master Curve is not necessary for the T Uptake assay because it is a ratio test. The T Uptake Master Curve card provides only lot and expiration date for the assay reagents. The T Uptake assay compares the control and patient sample uptake results with an euthyroid reference serum of known uptake. The T Uptake assay uses Low Calibrator A as follows:

$$\text{T Uptake ratio} = \frac{\text{ACS Calibrator A RLUs}}{\text{Unknown RLUs}} \times \text{reference serum factor}$$

The reference serum factor is printed on the Calibrator Assigned Value card provided with Calibrator A.

To report results as % T Uptake, the ACS:Centaur system requires a % T Uptake normal (reference) range. The system multiplies the T Uptake ratio by the midpoint of the % T Uptake normal range to obtain % T Uptake results.

Example

If the % T Uptake normal range is defined as 25 to 35% (midpoint of 30), and a patient sample has a T Uptake ratio of 0.82, the system calculates the % T Uptake as follows:

$$0.82 \times 30 = 24.6\%$$

The system reports 24.6% as the % T Uptake.

Qualitative Assays

Principle

Forward sandwich assays have a cutoff point that remains constant for each lot number of reagent. The cutoff point is defined by an index of 1.0 and the associated signal derived from the calibration curve.

1. Each kit lot number is calibrated and a Master Curve card is created.
2. The operator transfers the Master Curve from the Master Curve card to the system.
3. The operator runs the low and high calibrators to generate a correction formula for the specific system.
4. The system applies the correction formula to the observed signal for a sample and calculates the result.
5. The assay cutoff point is established using population studies.

Calculating a Cutoff Point

During product development, a cutoff point is established from extensive population studies. The analyte concentration associated with the cutoff point is assigned an index value of 1.0. A series of standards is characterized by comparing the standards' levels of reactivity to the cutoff point.

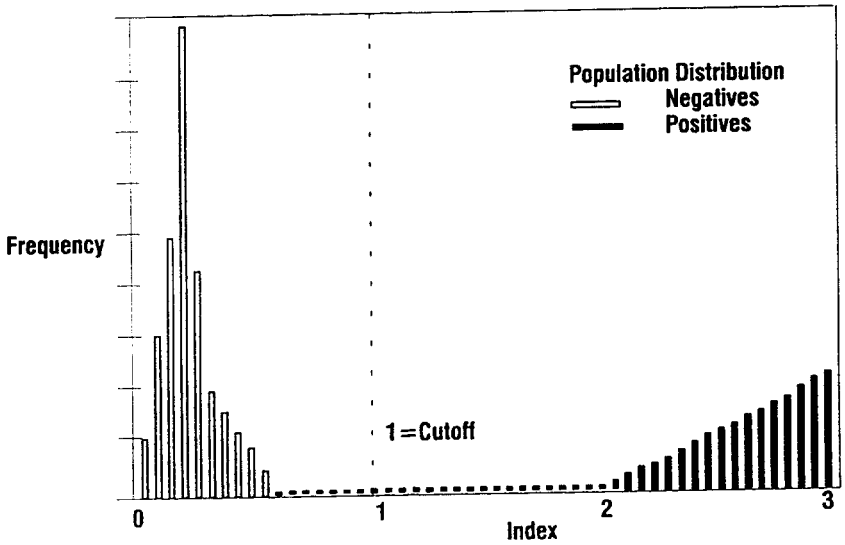

170 161

Establishing a Master Curve

To generate a Master Curve, the standards of varying concentrations are run on multiple systems over several days. The resulting standard curve determines the relationship between the defined analyte levels and the measured signal using the reagents from the specific lot number. These values become the lot-specific Master Curve and are recorded as barcodes on the Master Curve card.

The operator scans the barcoded Master Curve values on the card into the system. The system then fits the values to a curve using a 4 Parameter Logistic (4PL) function. The 4PL function is used for qualitative assays because it best describes the typical antibody-antigen binding curve. For information on scanning the Master Curve Card, refer to *Defining a Master Curve.*

Two-Point Calibration

In order to calibrate a qualitative assay on the system, the operator runs two calibrators of known value in replicate. For information on analyzing the calibrators, refer to *Performing Calibrations.*

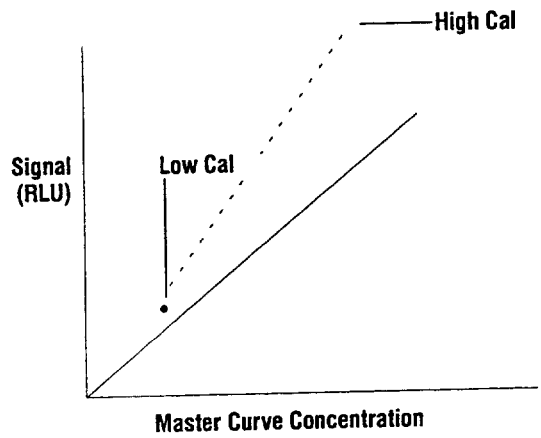

If the calibrators meet specific defined validity criteria, the system compares the measured signals for each calibrator to the Master Curve and determines a system-specific correction formula. This formula applies to the signal measured on all samples assayed on the system.

$$corrected\ signal = \frac{observed\ signal - defined\ intercept}{defined\ slope}$$

Calculating the Result

When patient samples or controls are assayed, the signal read by the system is corrected by the formula derived from the two known calibrators. The corrected signal is compared to the calibration curve, and its associated index value is determined.

- If the index value is greater or equal to 1.0, then the sample is interpreted as reactive.
- If the index value is less than 1.0, then the sample is interpreted as nonreactive.

Defining Calibration

Use the procedures in this section to define calibration for ACS:Centaur tests:

- Defining Master Curves
- Defining calibrator assigned values

Defining a Master Curve

Use the Master Curve card provided with each new lot number of reagent packs to establish the Master Curve. You can enter, store, display, and calibrate more than one lot of reagent. This allows you to efficiently transition from one lot of reagent to another.

1. At the workspace, select **Calibration.**
2. Select **Master Curve Definition.**

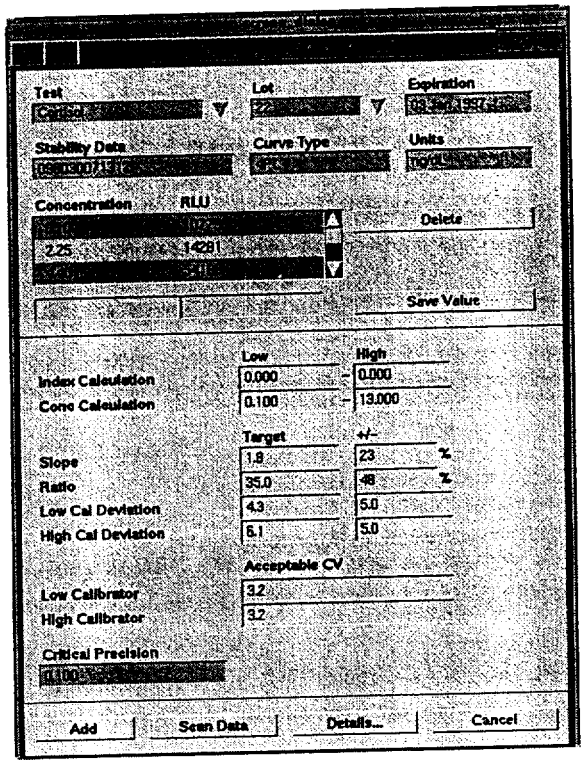

3. Select **Scan Data.**
4. Scan the Master Curve barcodes from the top of the card to the bottom.
5. Select **Save.**

133 764

Defining Calibrator Assigned Values

Use this procedure to enter or edit the calibrator values from the Calibrator Assigned Value card for each new lot number of calibrators.

1. At the workspace, select **Calibration.**
2. Select **Calibrator Definition.**

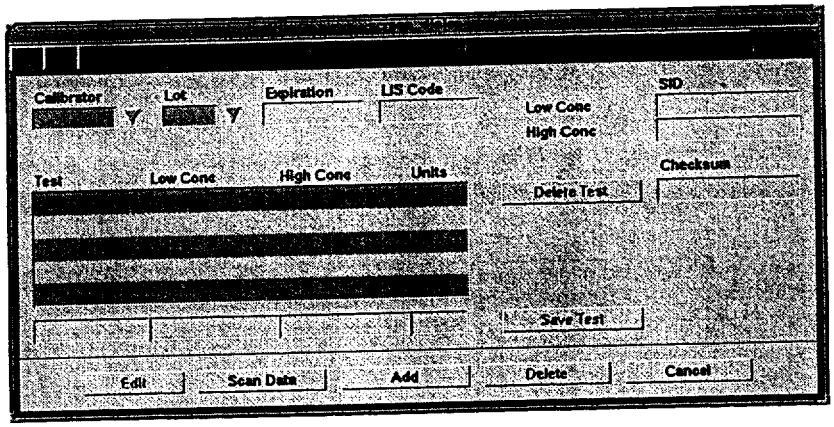

3. Complete the appropriate task.

If you want to . . .	*Then . . .*
enter a calibrator definition	a. Select **Scan Data.** b. Scan the barcodes on the Calibrator Assigned Value card from top to bottom.
manually enter a calibrator definition	a. Select **Add.** b. Enter a calibrator. c. Select or enter a lot. d. Enter the **Expiration** date. e. Enter the **LIS Code.** The SID of the Low Calibrator appears in Low Conc. The SID of the High Calibrator appears in High Conc. f. In the empty row below the table, enter the test name, the Low Calibrator value in Low Conc, the High Calibrator value in High Conc, and the units. g. Select **Save Test.** h. Repeat steps f and g for each test. i. Enter the **Checksum.** j. Select **Save.** k. Select **Yes** to save the changes.

If you want to . . .	*Then . . .*
delete a calibrator definition	a. Select a calibrator. b. Select a lot. c. Select a test. d. Select **Delete**. e. Select **Continue**.
add a test to a calibrator definition	a. Select a calibrator. b. Select a lot. c. Select **Edit**. d. In the empty row below the table, the calibrator test name, the Low Calibrator value in Low Conc, the High Calibrator value in High Conc, and the units. e. Select **Save Test**.
delete a test from a calibrator definition	a. Select a calibrator. b. Select a lot. c. Select a test. d. Select **Delete Test**. e. Select **Continue**.
edit the LIS Code for a calibrator definition	a. Select a calibrator. b. Select a lot. c. Select **Edit**. d. Edit the LIS Code.

4. Select **Save**.
5. Select **Yes** to save the changes.

130 Note

Performing Calibrations

Use the procedures in this section to calibrate the ACS:Centaur system:

- verify the calibration status
- review due dates for the next calibration
- schedule a calibration
- review calibration data
- print reports

Verifying Calibration Status and Due Dates

The system calculates the next calibration date by adding the calibration interval to the date of the most recent calibration.

1. At the workspace, select **Calibration.**
2. Select **Summary.**
3. Select **All Tests** in View.
4. Select **Status** in Sort.
5. Review the calibration status and due dates.

   The system displays tests without Master Curves, and then expired calibrations.

Calibration Flag	Description
Accepted ?	You manually accepted an invalid calibration. Schedule a calibration as described in *Scheduling Calibrators*, page 5-16.
Current	The calibration is valid and the test does not require calibration.
Due ?	
Expired	The calibration has expired. Schedule a calibration as described in *Scheduling Calibrators*, page 5-16.
Inprocess ?	The test is being calibrated.
Invalid ?	
No Master Curve	The test does not have a Master Curve. Enter a Master Curve for the test as described in *Defining a Master Curve*, page 5-12.

Calibration Flag	Description
Pending ?	The calibration is scheduled.
Waived	You used an expired calibration for the result. Schedule a calibration as described in *Scheduling Calibrators*, page 5-16.

Scheduling Calibrators

1. At the workspace, select **Worklist.**
2. Select **Schedule.**
3. Select **Calibrator.**

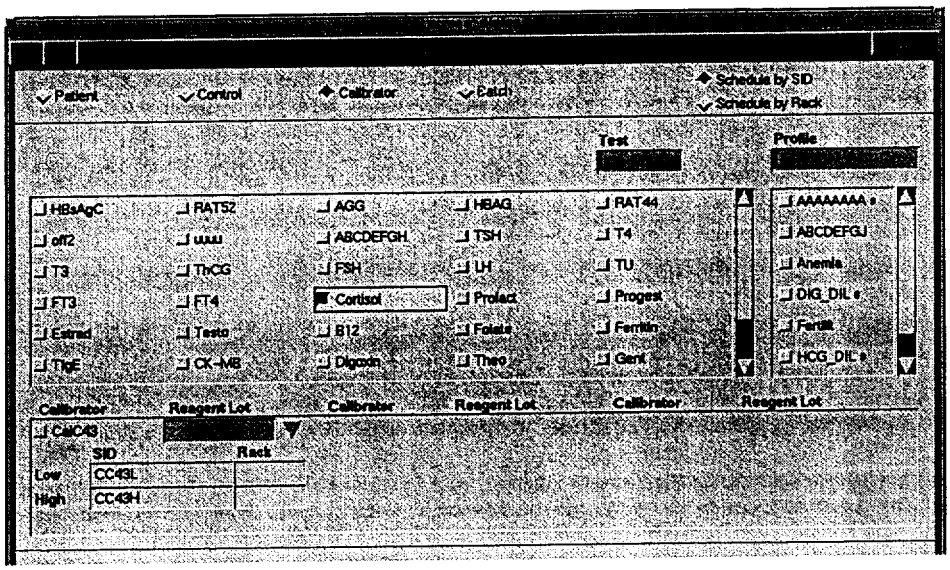

4. Select the appropriate profiles or tests.
5. You can select a calibrator name from the list.
6. You can accept the default reagent lot, enter a lot, or select a lot from the list.

   The system provides the calibrator expiration date and the assigned SIDs for the low and high calibrators.
7. Select the SIDs for the low and high calibrators.
8. You can specify the **Rack** for the low and high calibrators.

   If you do not specify the Rack, the system assigns the Rack when you load the calibrators.
9. Select **Save.**
10. You can repeat steps 4 through 9 to schedule additional calibrators.
11. You can select **Summary** to review the worklist.

157 198

12. Select **Close** and then select **Yes** to save the changes.
13. Install sample cups of low and high calibrators in a rack.
14. Install the rack on the system as described in *Processing the Samples* in Section 4.

Reviewing Calibration Data

1. At the workspace, select **Calibration**.
2. Select **Data**.

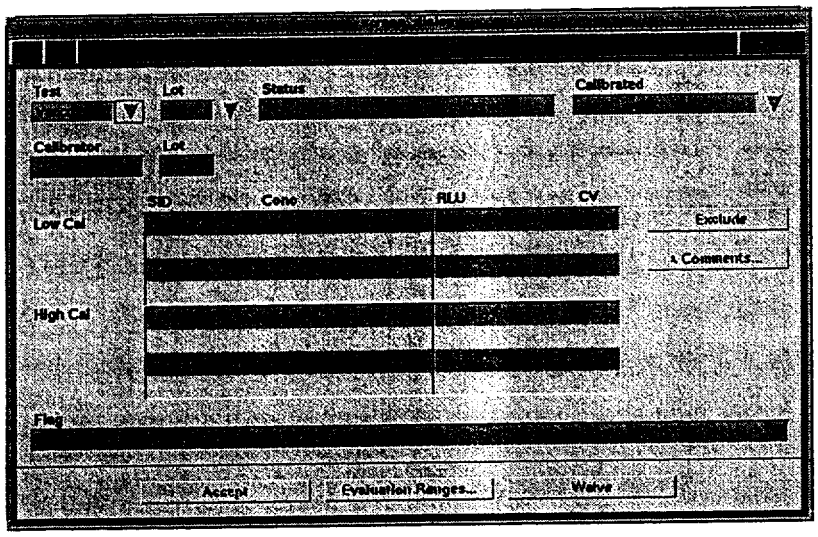

3. Enter the test criteria:
   a. Select a test.
   b. Select a lot number.
   c. Select a calibration date in **Calibrated**.
4. Review the calibration status, results, and flags.

Calibration Flag	*Description*
Accepted ?	You manually accepted an invalid calibration. Schedule a calibration as described in *Scheduling Calibrators*, page 5-16.
Current	The calibration is valid and the test does not require calibration.
Due ?	
Expired	The calibration has expired. Schedule a calibration as described in *Scheduling Calibrators*, page 5-16.

135 169

Calibration Flag	Description
Inprocess ?	The test is being calibrated.
Invalid ?	
No Master Curve	The test does not have a Master Curve. Enter a Master Curve for the test as described in *Defining a Master Curve*, page 5-12.
Pending ?	The calibration is scheduled.
Waived	You used an expired calibration for the result. Schedule a calibration as described in *Scheduling Calibrators*, page 5-16.

5. You can add a comment:
   a. Select a calibrator SID.
   b. Select **Comments**.
   c. Enter up to three comments.
      The system enters your initials and the date.
   d. Select **Save**.
6. You can select **Evaluation Ranges** to review details.

Reviewing Historical Calibration Data

1. At the workspace, select **Calibration**.
2. Select **Summary**.

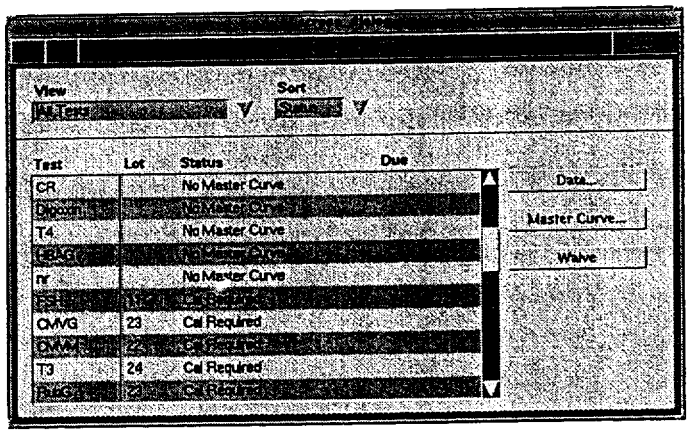

3. Select **Historical** in View.
4. You can enter test criteria:
   a. Select a test.

158 170

b. Select a reagent lot.

c. Select a calibrator lot.

5. You can select a calibration and select **Data** to review the data.
6. You can select a calibration and select **Master Curve** to review the Master Curve.
7. Select **Save**.
8. You can select **Evaluation Ranges** to review details.

Excluding a Calibration Result

1. At the workspace, select **Calibration**.
2. Select **Data**.

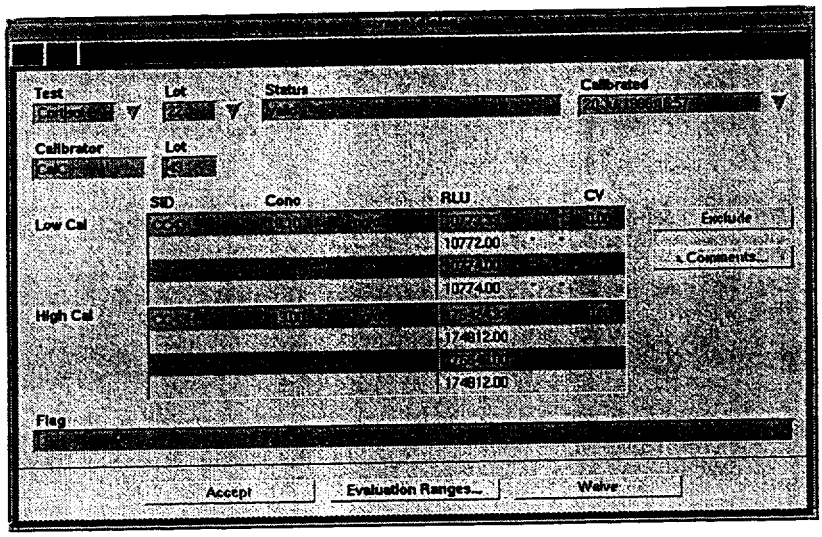

3. Select a test.
4. Select a lot number.
5. Select a calibration date in **Calibrated**.
6. Select a calibrator RLU.
7. Select **Exclude**.
8. Select **Save**.

140

Waiving an Expired Calibration

The system displays the Expired status flag when the calibration interval for a test is past. You can waive the calibration to run samples in the test.

NOTE: The restricted tests do not allow you to waive expired calibrations. You cannot waive an historic calibration.

1. At the workspace, select **Calibration**.
2. Select **Data**.
3. Select a test.
4. Select a test lot.
5. Select or enter a calibration date in **Calibrated**.
6. Select a calibrator RLU.
7. Select **Waive**.

Accepting an Invalid Calibration

You can accept an invalid calibration by releasing it to an LIS, which activates the calibration.

⚠ **CAUTION:** Accept an invalid calibration only on the recommendation of a Chiron Diagnostics Service Representative.

NOTE: You cannot accept invalid calibrations for some tests.

1. At the workspace, select **Calibration**.
2. Select **Data**.
3. Select a test.
4. Select a lot number.
5. Select a calibration date in **Calibrated**.
6. Select **Accept**.

Printing Calibration Data

1. Open the Calibration window that contains the data that you want to print.
2. At the workspace, select the **Print** symbol.
3. Select the calibration report.
   a. You can select a different starting date or ending date.
   b. You can select the shift.

The system prints the report.

1-93

6 Quality Control

Principles 6-3

Definitions 6-3

Interpretation of Control Data 6-4

Levey–Jennings Chart 6-4

Westgard Rules 6-5

QC Principles for Quantitative Assays 6-5

QC Principles for Qualitative Assays 6-6

Defining QC 6-7

Adding a Control 6-7

Editing a QC Definition 6-8

Deleting a Control or a Test 6-8

Printing a QC Definition 6-9

Performing QC 6-10

Scheduling Controls 6-10

Autoscheduling Controls 6-11

Reviewing QC Data 6-11

Reviewing QC Data Points and Statistics 6-11

Reviewing Levey-Jennings Charts 6-12

Reviewing QC Statistical Summaries 6-13

Editing QC Data Points and Statistics 6-14

Printing QC Reports 6-15

144

Principles

Use this section to learn the principles of Quality Control:

- definitions
- interpretation of control data, such as Levey–Jennings charts and Westgard rules
- QC principles for quantitative assays
- QC principles for qualitative assays

Definitions

Term	Definition
Quality Control	Quality Control (QC) is a method by which acceptable performance is maintained in the analytical laboratory: a. Measure the variability of the analytical process. b. Evaluate the results of the measurement against certain criteria or specifications. c. Correct excess variability when necessary. d. Document the actions.
Quality Control procedures	Reasons for implementing QC procedures include: • to detect when a system is not functioning correctly • to detect shifts in total system performance • to avoid the reporting of erroneous results • to proactively detect trends in system response that may indicate the need for intervention before system performance becomes unacceptable
Quality Control parameters	QC parameters are based on past performance of a system, including a combination of everything involved in the testing process. The system therefore includes the instrument, reagents, system fluids, supplies, materials, and operators. Ranges are constructed to measure the amount of variability. Based on the ranges, it is possible to predict when the system is operating correctly. The controls monitor how well a system is functioning relative to its own performance. When a control falls outside its established range, one or more of the following factors may be involved: • a decrease in precision • a shift in system response • a decrease in accuracy

146

Term	Definition
Quality Assurance	Quality Assurance is the program that ensures the accuracy of the final results reported by the laboratory.
Quality Assessment	Quality Assessment is a method to determine the quality of the results generated by the laboratory. Also known as proficiency testing, it is usually an external evaluation of a laboratory's performance involving the incorporation of proficiency panels as the means of evaluation. Internal quality assessment programs can also be implemented. Quality Assessment is a challenge to the effectiveness of the Quality Assurance and Quality Control programs.

Interpretation of Control Data

A statistically significant number of control data points are generated. Acceptable limits are then established by calculating the mean recovery and a range based on two standard deviations (2SD). Approximately 95% of all subsequent control values should fall within a range of the mean +/– 2SD.

Levey–Jennings Chart

A statistical tool for evaluating and recording the control data is called the Levey–Jennings chart. The chart can evaluate individual results and help to detect trends and shifts in control data.

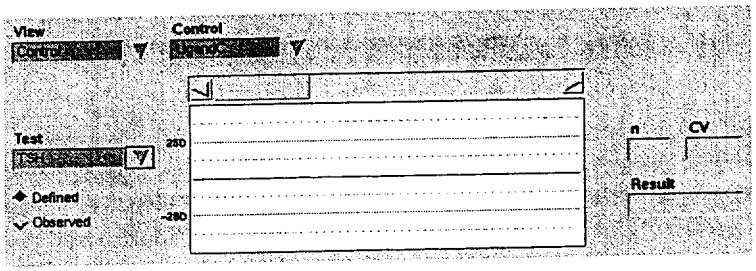

147

Westgard Rules

One of the most useful procedures for interpreting control data was developed by Dr. James Westgard and colleagues.[5–1] The Westgard rules are used in conjunction with Levey–Jennings charts to analyze the control data.

Westgard Rule	Description of Violation	Purpose
1_{2s}	One control value falls outside the 2SD limits	warning limit
1_{3s}	One control value falls outside the 3SD limits	to detect large shift or decreased precision
2_{2s}	Two consecutive control values exceed the same 2SD limit	to detect shifts
4_{1s}	Four consecutive control values exceed the same 1SD limit	to detect small shifts or trends, like drift
6x	Six consecutive control values fall on the same side of the mean	to detect trends
T6	Six consecutive control values for one control level display an upward or downward trend	to detect small shifts
10x	Ten consecutive control values fall on the same side of the mean	to detect shifts

The ACS:Centaur system interprets QC data using Westgard rules as follows:

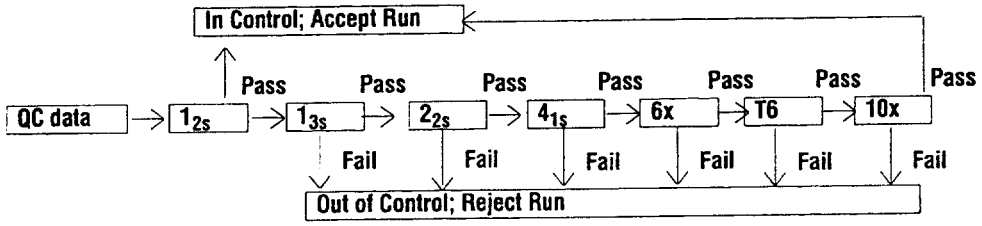

QC Principles for Quantitative Assays

The goal of QC for quantitative assays is to monitor the entire reporting range, or at least the medical decision points.

145 179

To monitor system performance and chart trends, Chiron Diagnostics recommends that you run a minimum of three levels of QC material at least once during each 8-hour shift, depending on the assay. If your established QC program requires more frequent use of controls, follow those procedures.

QC Principles for Qualitative Assays

Qualitative tests can be defined as having binary result possibilities: positive or negative, yes or no. Qualitative tests have only one medical decision point or cut-off point. But in reality, qualitative tests have a quantifiable concentration associated with every result.

Measures to control the quality of the results in an Infectious Disease diagnostic laboratory are important because of the consequences of either a false positive or false negative result. Therefore, the goals of QC for qualitative assays are to maximize accuracy, sensitivity, and specificity:

- maximized accuracy minimizes false positives and false negatives
- maximized sensitivity minimizes false negatives
- maximized specificity minimizes false positives

To monitor system performance and chart trends, Chiron Diagnostics recommends that you run a minimum of *[xxx, text from approved PIs]*. If your established QC program requires more frequent use of controls, follow those procedures.

Defining QC

Use the procedures in this section to define quality control parameters and values for ACS tests:

- add a control
- edit a QC definition
- delete a test or a control
- print a QC definition

Adding a Control

1. At the workspace, select **Quality Control.**
2. Select **Control Definition.**

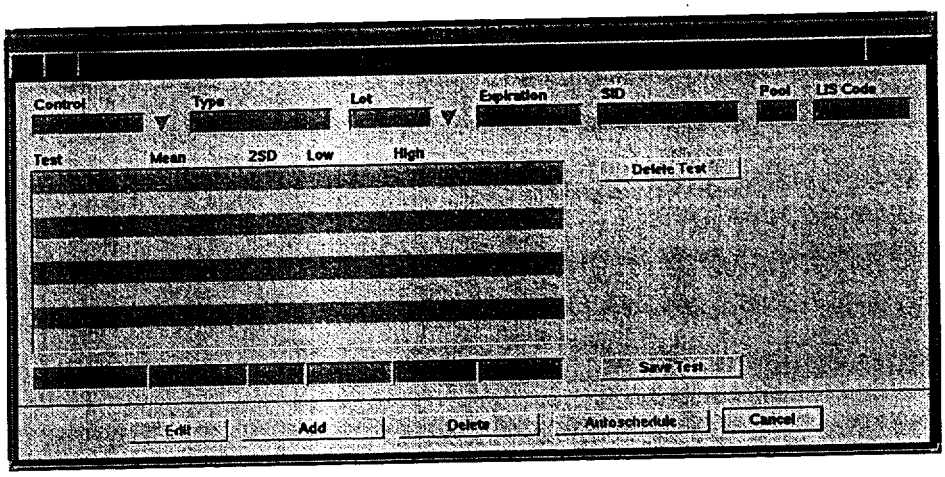

3. Select **Add.**
4. Select or enter a **Control.**
5. Select a **Type.**
6. Select or enter a **Lot.**
7. Select or enter in the fields below the table:
   a. Select a test.
   b. Select the mean and 2SD for the test.
8. Select **Save Test.**
9. Repeat steps 7 and 8 until the control definition is complete.
10. Select **Save.**

170 181

Editing a QC Definition

1. At the workspace, select **Quality Control.**
2. Select **Control Definition.**
3. Select a **Control** and a **Lot.**
4. Select **Edit.**

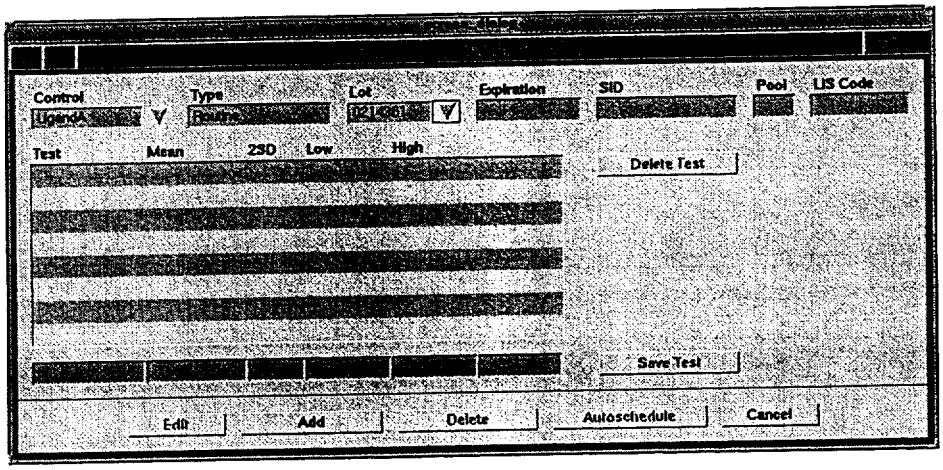

5. You can edit:
   - expiration date
   - SID
   - pool number
   - LIS Code
6. Select a test.
7. You can edit the mean or 2SD in the fields below the table:
   a. Select **Edit.**
   b. Edit the mean or 2SD.
   c. Select **Save Test.**
8. Repeat steps 6 and 7 to edit the mean or SD for other tests.
9. Select **Save.**
10. Select **Continue.**

Deleting a Control or a Test

1. At the workspace, select **Quality Control.**

151 182

2. Select **Control Definition.**

If you want to . . .	*Then . . .*
delete a control definition	a. Select a **Control** and a **Lot.** b. Select **Delete.**
delete a test for a control	a. Select a **Control** and a **Lot.** b. Select a test. c. Select **Edit Test.** d. Select **Delete Test.** e. Select **Yes.**

3. Select **Save.**
4. Select **Yes.**

Printing a QC Definition

1. At the workspace, select **Quality Control.**
2. Select **Control Definition.**
3. At the workspace, select the **Print** symbol.
4. Select **Report Options.**
5. Select the report.
   The system prints the report.

65 ✓ 183

Performing QC

Use the procedures in this section to schedule controls, review QC data, review statistical summaries, edit QC data, and print reports.

Run a minimum of three levels of QC material at least once during each 8 or 24 hour shift, depending on the assay. If your established QC program requires more frequent use of controls, then follow those procedures. Refer to the ACS assay product inserts for specific QC recommendations for each assay.

Scheduling Controls

1. At the workspace, select **Worklist.**
2. Select **Schedule.**
3. Select **Control.**

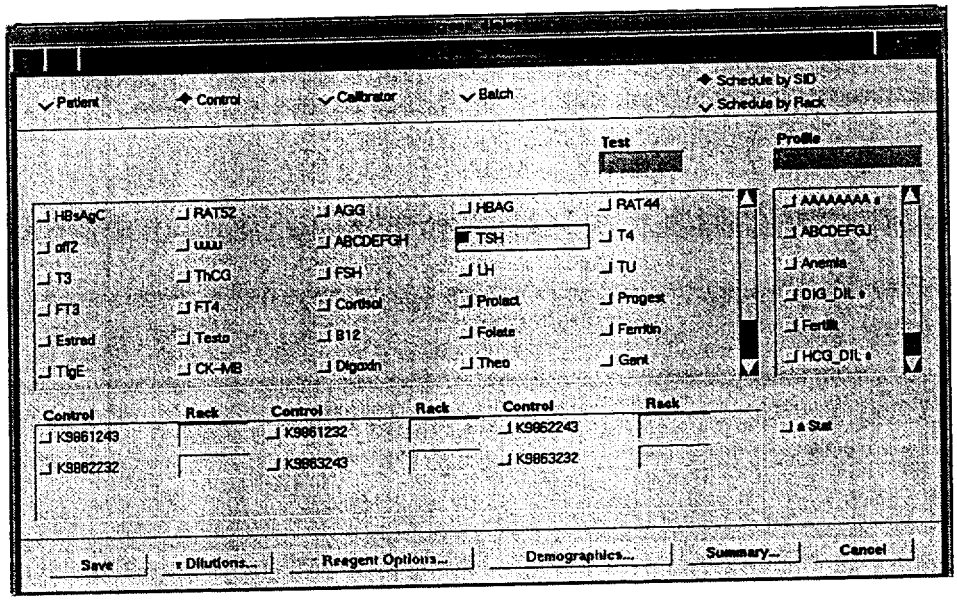

4. Enter or select the appropriate profiles or tests.
5. Select a control.
6. You can select the following options:
   - enter the **Rack.**
   - select **Stat.**
7. Select **Save.**
8. You can repeat steps 4 through 7 to schedule additional controls.
9. Install sample cups of QC material in the racks.

113 184

10. Install the racks in the sample entry queue, as described in *Processing the Samples* in Section 6.

Autoscheduling Controls

1. At the workspace, select **Quality Control**.
2. Select **Control Definition**.
3. Select a control.
4. Select a lot.
5. Select **Autoschedule**.
6. Select **Continue**.
7. Select **Save** and then select **Yes** to save the changes.

Reviewing QC Data

You can review QC data points and statistics, Levey-Jennings charts, and monthly and lot-to-date statistical summaries.

Reviewing QC Data Points and Statistics

The system stores up to 300 data points for each combination of tests and control lots.

1. At the workspace, select **Quality Control**.
2. Select **Data**.

124 185

3. Enter the criteria for the data that you want to display.

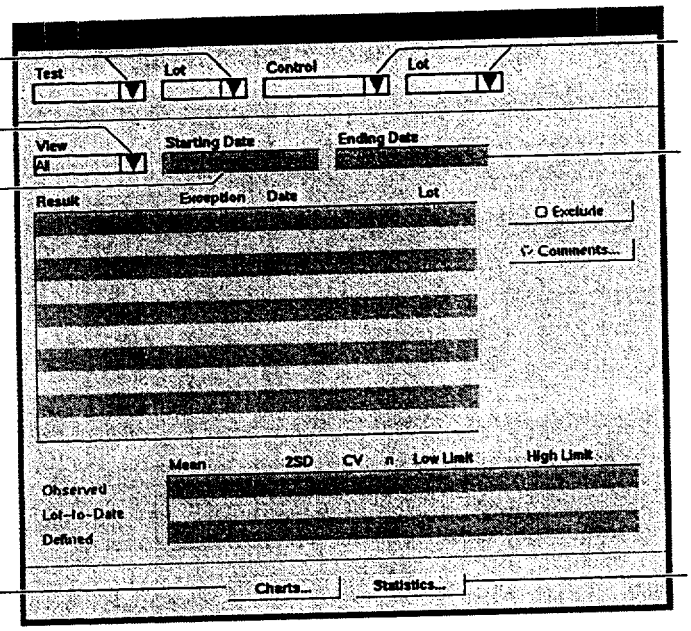

4. Review the results, exceptions, and statistics.
5. You can add a comment:
   a. Select a result.
   b. Select **Comments**.
   c. Enter up to three comments. The system enters your initials and date.
   d. Select **Save**.

Reviewing Levey-Jennings Charts

Each Levey-Jennings chart displays up to 90 data points, the mean, and three standard deviations. The ACS system stores up to 300 data points for each combination of tests and controls.

1. At the workspace, select **Quality Control**.
2. Select **Charts**.

115 186

3. Select a display option.

If you want to display data points . . .	*Then . . .*
for one test and up to three controls	a. Select **Test** in **View**. b. Select the test you want to display in **Test**. c. For each chart, select the control. d. For each chart, select **Defined** or **Observed**.
for one control and up to three tests	a. Select **Control** in **View**. b. Select the control you want to display in **Control**. c. For each chart, select the test. d. For each chart, select **Defined** or **Observed**.

4. You can change the starting date or ending date of the charts by selecting the starting date or ending date arrows at the lower corners of the charts.
5. You can display chart details:
   a. Select a data point.
   b. Select **Details**.
6. You can display additional data:
   a. Select a data point.
   b. Select **Data**.

Reviewing QC Statistical Summaries

Use this procedure to review cumulative monthly and lot-to-date statistics for a selected test and control.

1. At the workspace, select **Quality Control**.

156 181

2. Select **Statistics**.

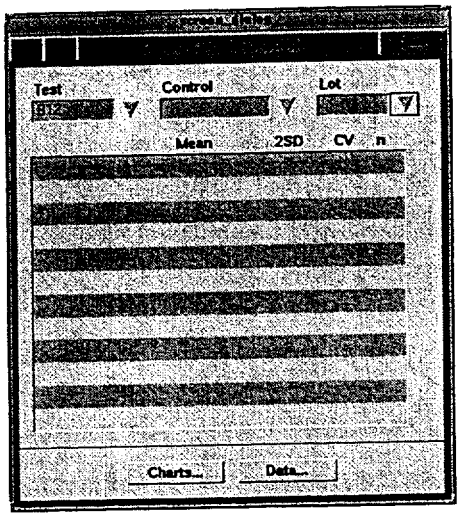

3. Select a test.
4. Select a control name.
5. Select a control lot number.

Editing QC Data Points and Statistics

The system stores up to 300 data points for each combination of tests and control lots.

1. At the workspace, select **Quality Control**.
2. Select **Data**.
3. Enter the criteria for the data you want to display:
   a. Select a test.
   b. You can select a test lot number.
   c. Select a control.
   d. You can select a control lot number.
   e. You can select **Excluded** in **View**.
   f. Select the starting date and the ending date.
4. Review the results, exceptions, and statistics.

157 188

5. Select the result.

If you want to . . .	*Then . . .*
exclude a result	Select **Exclude**.
include an excluded result	Select **Include**.
add a comment about a result	a. Select **Comments**. b. Enter up to three comments. The system enters your initials and the date. c. Select **Save**.

Printing QC Reports

1. Open the QC window that contains the data you want to print.
2. At the workspace, select the **Print** symbol.
3. Select **Report Options**.
4. Select the QC report.
   The system prints the report.

1,15 184

7 Maintenance

Daily Maintenance **7-5**
Daily Cleaning Procedure 7-5
Replacing the Water Bottle 7-5

Weekly Maintenance **7-6**
Cleaning the Water Bottle and Water Reservoir 7-6
Cleaning the Sample Tip Waste Area 7-9

Monthly Maintenance **7-13**
Performing the Monthly Cleaning Procedure 7-13
Cleaning the Reagent Probes 7-15
Cleaning the Ancillary Probe 7-17
Cleaning the Aspirate Probes 7-18
Cleaning the Cuvette Waste Area 7-19
Cleaning the Air Filter 7-24

As-Needed Maintenance **7-27**
Replacing the Cleaning Solution 7-27
Cleaning the Probe Rinse Stations 7-28
Cleaning the Reagent Probe Shutter 7-29
Cleaning the Primary Reagent Compartment and Reagent Slides 7-30
Cleaning the Covers and Pointing Device 7-31
Cleaning the Sample Racks 7-31

Accessing Maintenance Information **7-3**
Using the Maintenance Schedule 7-3
Using the Maintenance Log 7-3
Accessing Online Maintenance Procedures 7-4
Printing the Maintenance Schedule 7-4

Accessing Maintenance Information

Use this section to perform the following tasks:

- use the maintenance schedule
- use the maintenance log
- access online maintenance procedures
- print the maintenance schedule

Using the Maintenance Schedule

The ACS:Centaur system provides a maintenance schedule that lists the maintenance tasks.

1. At the workspace, select the **Maintenance** symbol.

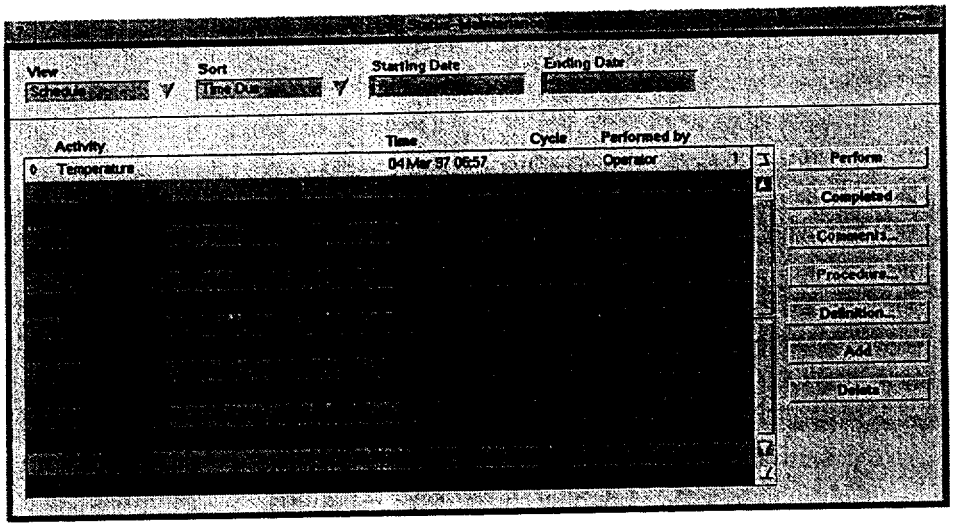

2. Select **Schedule** in View.

Using the Maintenance Log

The ACS:Centaur system provides a maintenance log to update a maintenance task after you complete a task.

1. At the workspace, select the **Maintenance** symbol.

2. Select **Log** in View.

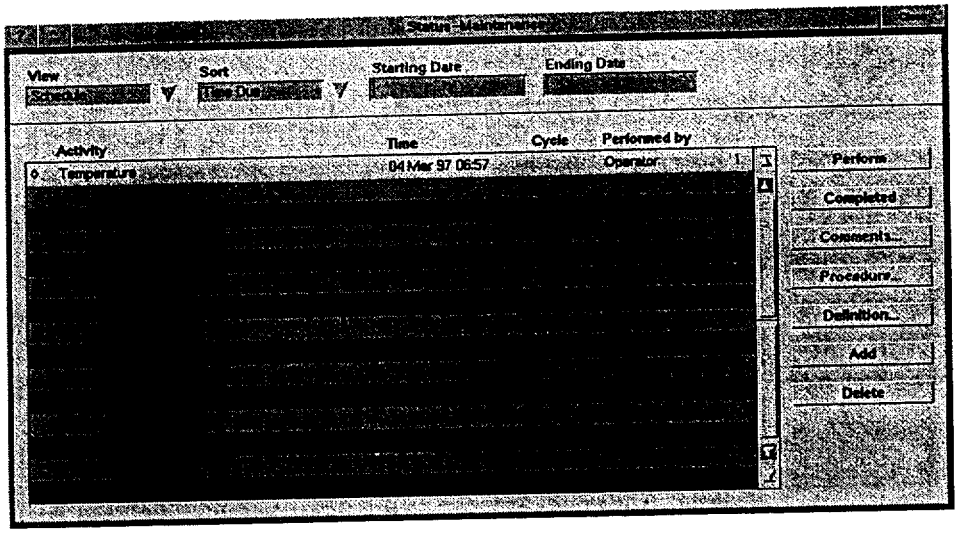

3. Select a task.
4. Enter your initials in Initials.
5. Select **Save**.

Accessing Online Maintenance Procedures

Maintenance activity information provides a brief procedure on how to perform the maintenance activity.

Select a maintenance activity in the Status–Maintenance window and then select **Procedure** to access information about a maintenance activity. You can select **Figure** to display an illustration of the procedure.

Weekly, Monthly, and As-Needed Procedures provide detailed procedures and illustrations.

Printing the Maintenance Schedule

1. At the workspace, select the **Maintenance** symbol.
2. Ensure that **Schedule** is selected in View.
3. At the workspace, select **Print**.
4. Select **Maintenance Schedule**.

Daily Maintenance

Daily maintenance includes the following procedures:

- daily cleaning procedure
- replacing the water bottle

Daily Cleaning Procedure

You can start the daily cleaning procedure at any time. Allow approximately xx minutes to complete the wash cycle and approximately xx minutes to complete the rinse cycle.

NOTE: You cannot process samples while the cleaning procedure is in progress.

The cleaning procedure cleans the probes, the rinse bowls, and the rinse stations. To optimize effectiveness of the cleaning procedure and enhance system performance, schedule the cleaning procedure after your peak workload.

⚠ **CAUTION:** Choosing not to perform the cleaning procedure can result in bacterial contamination, paramagnetic particle buildup, protein buildup, and crystallization, which can affect patient results.

1. At the workspace, select the **Maintenance** symbol.

   Ensure that the View is Schedule.

2. Select **Daily Cleaning Procedure.**

3. Select **Perform.**

   The system starts the cleaning procedure.

   NOTE: If the cleaning procedure stops before it completes, the system prevents you from testing samples until it completes the cleaning procedure or completes a rinse cycle.

4. If the cleaning procedure stops before it completes, select **Rinse.**

Replacing the Water Bottle

1. Remove and empty the water bottle as described in section 4, *Operating the System.*
2. Rinse the water bottle with reagent water, and invert the bottle to dry.
3. Fill the spare water bottle with reagent water.
4. Install the spare, full water bottle on the system.

1 of 193

Weekly Maintenance

Weekly maintenance includes the following procedures:

- cleaning the water bottle and water reservoir
- cleaning the sample tip waste area

The following reagents and supplies are required:

- Chiron Diagnostics Cleaning Solution
- small bottle brush
- lint-free tissues or gauze
- clean, dry sample tip waste tube

Ensure that the system is off by selecting System Status, and then Turn Off System.

Cleaning the Water Bottle and Water Reservoir

WARNING Cleaning solution contains sodium hypochlorite. When handling the cleaning solution, follow appropriate chemical safety guidelines, which include wearing gloves, protective eye shield, and a laboratory coat.

1. Remove the water bottle.

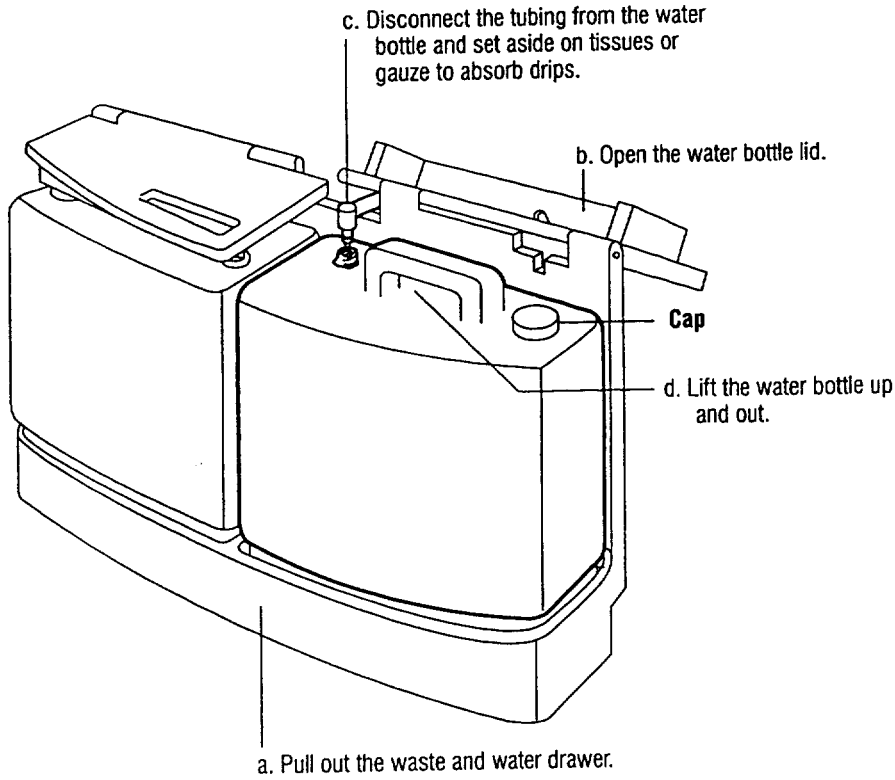

163 194

2. Remove the cap and empty any water from the water bottle.
3. Remove the water reservoir:

CAUTION: Handle the sensors gently because they are fragile.

CAUTION: To avoid crimps, grasp the fitting on the top of the reservoir. Do not grasp the tubing.

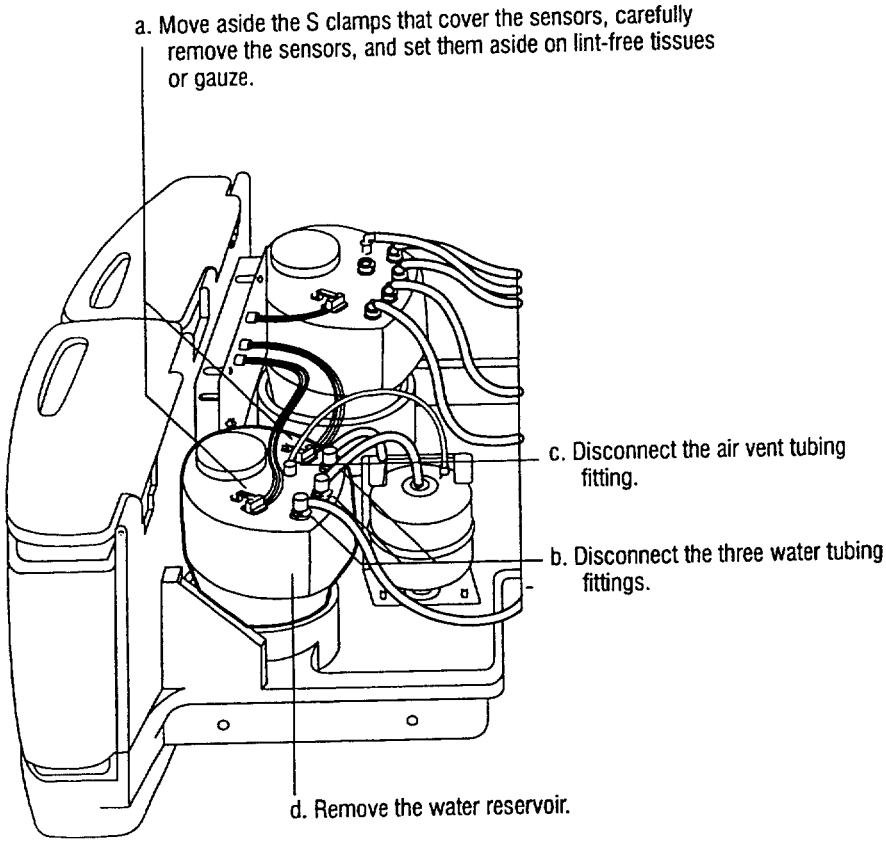

4. Remove the cap and empty any water from the reservoir.

CAUTION: Residual cleaning solution in the water reservoir tubing can affect assay performance. Ensure that the water reservoir is rinsed thoroughly with fresh reagent water after performing the cleaning procedure.

5. Clean the water reservoir:
   a. Pour approximately 1 L of cleaning solution into the reservoir.
   b. Place the cap on the bottle and close tightly.
   c. Swirl the solution around the inside of the reservoir a few times.
   d. Press a thick wad of gauze over the holes in the top of the reservoir, invert the reservoir, swirl the solution a few times, and return the reservoir to the upright position.
   e. Soak the reservoir for 5 minutes.
   f. Repeat steps c through e.

g. Swirl the solution again and then empty it.

h. Remove the cap and wipe the inside of the cap with cleaning solution.

i. Thoroughly rinse the inside of the reservoir and the cap at least five times with fresh reagent water.

j. Press some gauze over the holes in the top of the reservoir, invert the reservoir, swirl the water, and return the reservoir to the upright position.

k. Repeat step j once.

6. Add fresh reagent water to the reservoir until it is 3/4 full, and install the cap on the reservoir.

7. Install the water reservoir:

   a. Place the water reservoir in the waste and water drawer.

   NOTE: Ensure that the sensor tips are thoroughly cleaned and rinsed.

   b. Wipe the sensors with lint-free tissues or gauze saturated with cleaning solution.

   c. Wipe the sensors with lint-free tissues or gauze saturated with reagent water.

   d. Install the sensors in the top of the reservoir.

   e. Secure the sensors with the S clamps.

   f. Connect the air vent tubing and three water tubing fittings to the correct positions on the top of the reservoir.

8. Fill the spare, clean water bottle with fresh reagent water and install the cap.

9. Install the spare, full water bottle:

   a. Place the water bottle in the waste and water drawer.

   b. Connect the water bottle tubing to the bottle.

   c. Lower the water bottle lid.

⚠ **CAUTION:** Residual cleaning solution in the water bottle tubing can affect water filter and assay performance. Ensure that the water bottle is rinsed with fresh reagent water after performing the cleaning procedure.

10. Clean the water bottle:

    a. Pour approximately 1 L of cleaning solution into the water bottle.

    b. Place the cap on the bottle and close tightly.

    c. Swirl the solution around the inside of the bottle a few times, then invert and swirl, as in step 5d.

    d. Soak the bottle for 5 minutes.

    e. Repeat steps c and d.

    f. Swirl the solution again and then empty it.

    g. Rinse the inside of the bottle at least five times with fresh reagent water, and invert it to dry.

(b7 1910

11. Push in the waste and water drawer.

Cleaning the Sample Tip Waste Area

The sample tip waste area includes the tip remover, tube, chute, and reservoir.

BIOHAZARD: Refer to Appendix A, *Protecting Yourself from Biohazards*, for recommended precautions when working with biohazardous materials.

WARNING Cleaning solution contains sodium hypochlorite. When handling the cleaning solution, follow appropriate chemical safety guidelines, which include wearing gloves, protective eye shield, and a laboratory coat.

1. Open the top cover.
2. Remove the sample tip remover and waste tube:
   a. Gently push the sample probe and ancillary probe toward the incubation ring.
   b. Loosen the knurled knob.
   c. Lift the tip remover and tube up and out of the system.

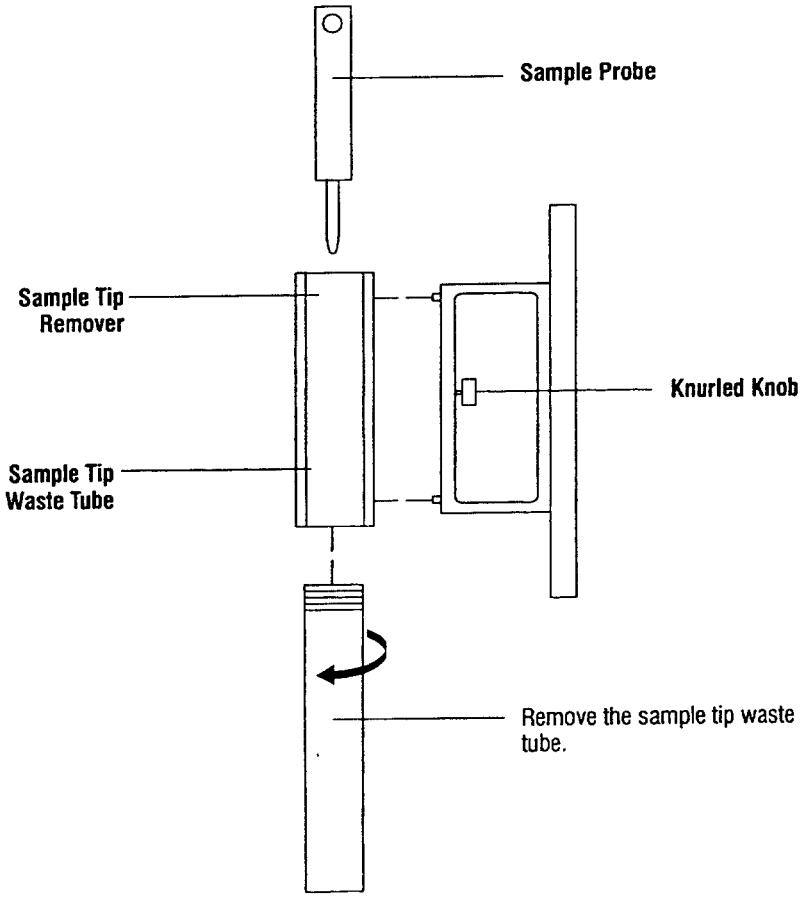

'66 19M

3. Clean the sample tip remover and waste tube:
   a. Unscrew the tube from the tip remover.
   b. Soak them in cleaning solution for 5 minutes.

   ⚠ **CAUTION:** Scrub gently to avoid splattering the material from the inside of the tube.

   c. Use a brush or sponge to clean the inside of the tube.
   d. Rinse the tip remover and tube with water, and set the tube aside to dry completely.
   e. Thoroughly dry the tip remover.
   f. Connect the tip remover to the spare waste tube.
4. Install the sample tip remover and waste tube:
   a. Place the bottom of the tube into the opening below the sample probe.
   b. With the slot on the tip remover facing away from you, align the two locator pins on the right side with the holes on the mounting block.
   c. Turn the knurled knob until the tip remover is secure.
5. Close the top cover.
6. Access the sample tip waste chute:
   a. Open the right waste door.
   b. Remove and empty the sample tip waste bin.
   c. Pull out the drawer.
   d. Lift the lid to the cleaning solution bottle.
   e. Remove the cleaning solution bottle.

⚠ **CAUTION:** Avoid touching the cleaning solution tubing. Cleaning solution can drip from the tubing.

7. Remove the sample tip waste chute.

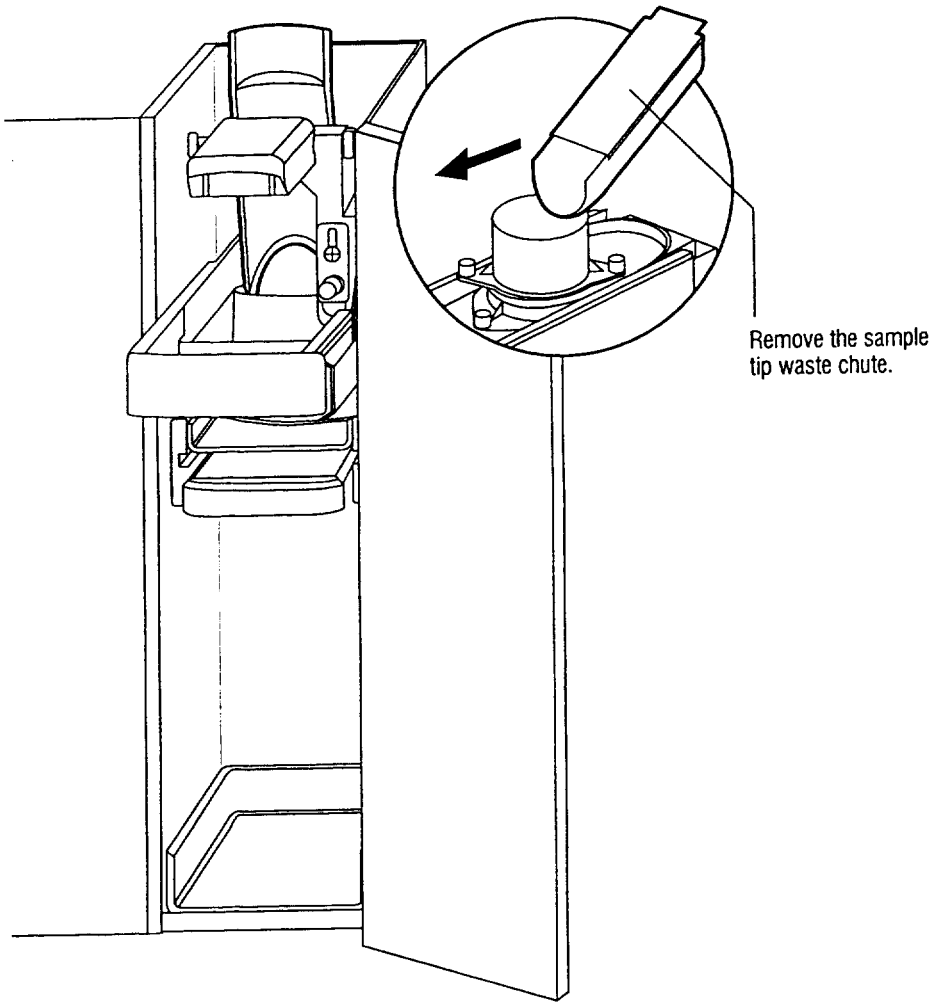

8. Clean the sample tip waste chute and the sample tip waste reservoir:
   a. Soak both parts of the chute in cleaning solution for 5 minutes.
   b. While the chute is soaking, wipe the sample tip waste reservoir with tissues or gauze saturated with cleaning solution.
   c. Wipe the reservoir with tissues or gauze saturated with water.
   d. Dry the reservoir.

   ⚠ **CAUTION:** Scrub gently to avoid splattering the material from the inside of the tube.

   e. Use a bottle brush to clean the chute.
   f. Rinse the chute with water.
   g. Dry the chute.
9. Install the sample tip waste chute:
   a. Assemble the chute.

b. Align the pins on the top of the chute with the J hooks, and install the bottom of the chute in the reservoir.

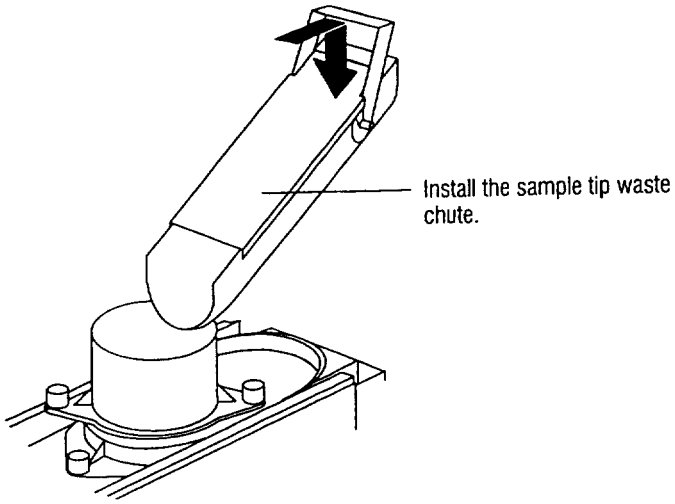

NOTE: You can replace the cleaning solution if it is low as described in *Replacing the Cleaning Solution.*

10. Install the cleaning solution bottle:
    a. Place the bottle in the drawer.
    b. Close the lid.
    c. Close the drawer.
11. Install the sample tip waste bin.
12. Close the right waste door.

Monthly Maintenance

Monthly maintenance includes the following procedures:

- performing the monthly cleaning procedure
- cleaning the reagent probes and ancillary probe
- cleaning the aspirate probes
- cleaning the cuvette waste area
- cleaning the air filter

The following reagents and supplies are required:

- approximately 3 L of cleaning solution
- at least 4 L of reagent water
- bottle brush
- lint-free tissues or gauze
- monthly cleaning tubing

Performing the Monthly Cleaning Procedure

Allow approximately 30 minutes to complete this procedure. You cannot use the system for testing during this procedure.

BIOHAZARD: Refer to Appendix A, *Protecting Yourself from Biohazards*, for recommended precautions when working with biohazardous materials.

WARNING Cleaning solution contains sodium hypochlorite. When handling the cleaning solution, follow appropriate chemical safety guidelines, which include wearing gloves, protective eye shield, and a laboratory coat.

1. Start the monthly cleaning procedure:
   a. At the workspace, select the **Maintenance** symbol.
      Ensure that the View is Schedule.
   b. Select **Monthly Cleaning Procedure**.
   c. Select **Perform**.
   The system starts the cleaning procedure by emptying the waste reservoir.
2. When the waste reservoir is empty, add cleaning solution to the water bottle:
   a. Remove the water bottle.
   b. Add approximately 4 L of cleaning solution to the water bottle.
   c. Install the water bottle.
3. Empty the water reservoir and the waste bottle:

170 201

a. Remove the water reservoir and the waste bottle.
b. Empty the water reservoir and the waste bottle.
c. Install the water reservoir and the waste bottle.

4. Remove the water filter:
   a. Disconnect the air vent tubing from the top of the water filter.
   b. Disconnect the upper and lower filter fittings from the filter.
   c. Remove the filter.
   d. Connect the upper and lower fittings to each other.

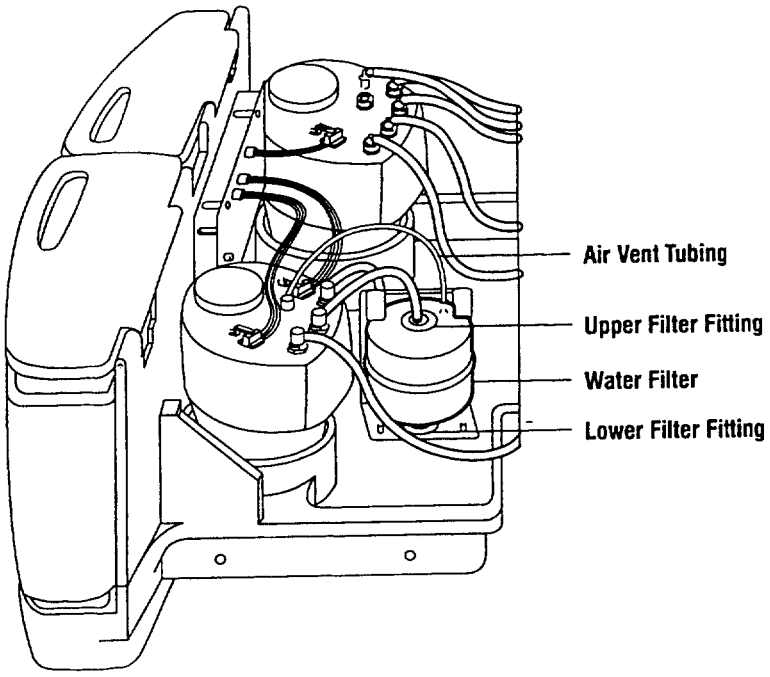

5. Connect the monthly cleaning tubing to the waste reservoir and to the quick disconnect (located between valve 66 and valve manifold).
   a. Select **Continue**.
6. When prompted, add reagent water to the water bottle:
   a. Remove and thoroughly rinse the water bottle with reagent water.
   b. Add approximately 2 L of reagent water to the water bottle.
   c. Install the water bottle.
   d. Select **Continue**.
7. When prompted, rinse the water bottle and the water reservoir, and add reagent water to the water bottle:
   a. Remove the water bottle and the water reservoir.

171 200

b. Thoroughly rinse the water bottle and the water reservoir with reagent water.
c. Add approximately 2 L of reagent water to the water bottle.
d. Install the water bottle and the water reservoir.
e. Select **Continue**.

8. When prompted, rinse the water bottle and the water reservoir:
   a. Remove the water bottle and the water reservoir.
   b. Thoroughly rinse the water bottle and the water reservoir with reagent water.
   c. Fill the water bottle with reagent water.
   d. Install the water bottle and the empty water reservoir.
   e. Select **Continue**.
9. When prompted, remove the monthly cleaning tubing:
   a. Disconnect the monthly cleaning tubing.
   b. Reconnect the valve manifold water fitting.
   c. Select **Continue**.

   The system primes the water reservoir and the water filter.

Cleaning the Reagent Probes

BIOHAZARD: Refer to Appendix A, *Protecting Yourself from Biohazards*, for recommended precautions when working with biohazardous materials.

WARNING The probe tips are sharp and can cause skin punctures. Be careful not to bend the probes.

NOTE: Ensure that the system is off by selecting System Status, and then Turn Off System.

1. Lift the top cover.

2. Remove the reagent probes cover.

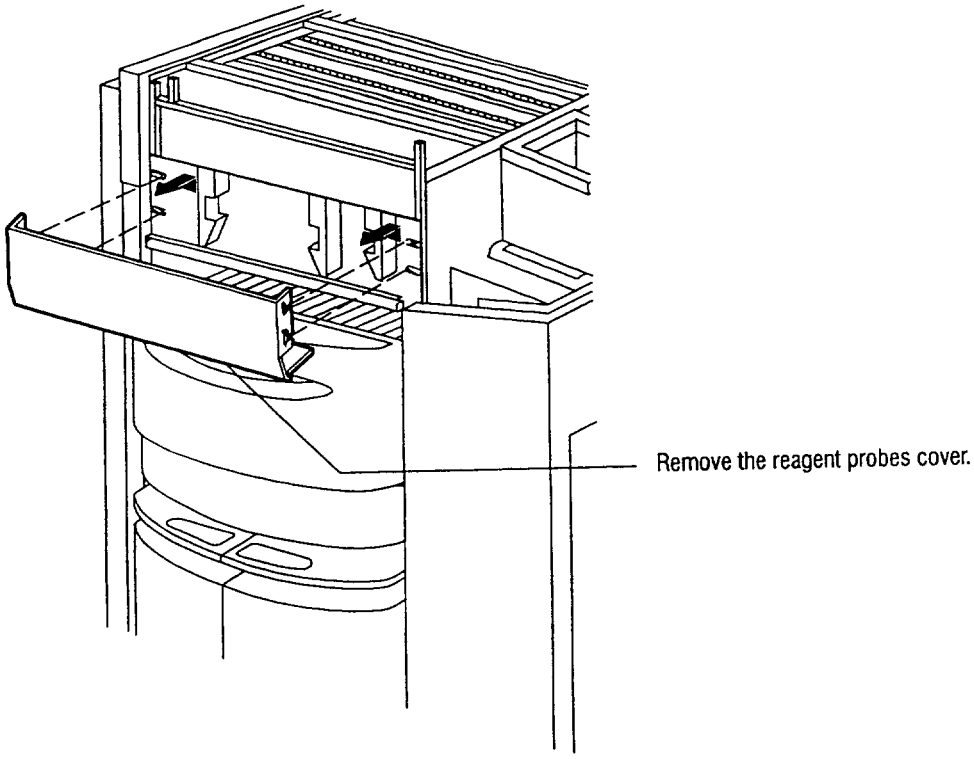

3. Clean the three reagent probes:
   a. Push the probes toward the incubation ring.
   b. Check the probe tip for damage. If a probe is damaged, replace the probe.
   c. Wipe each probe using a downward motion with lint-free tissues or gauze saturated with cleaning solution.

CAUTION: Thoroughly rinse the probe, especially the middle and top of the probe. Residual cleaning solution can affect assay performance or damage the probe.

d. Wipe each probe using a downward motion with lint-free tissues or gauze saturated with reagent water.

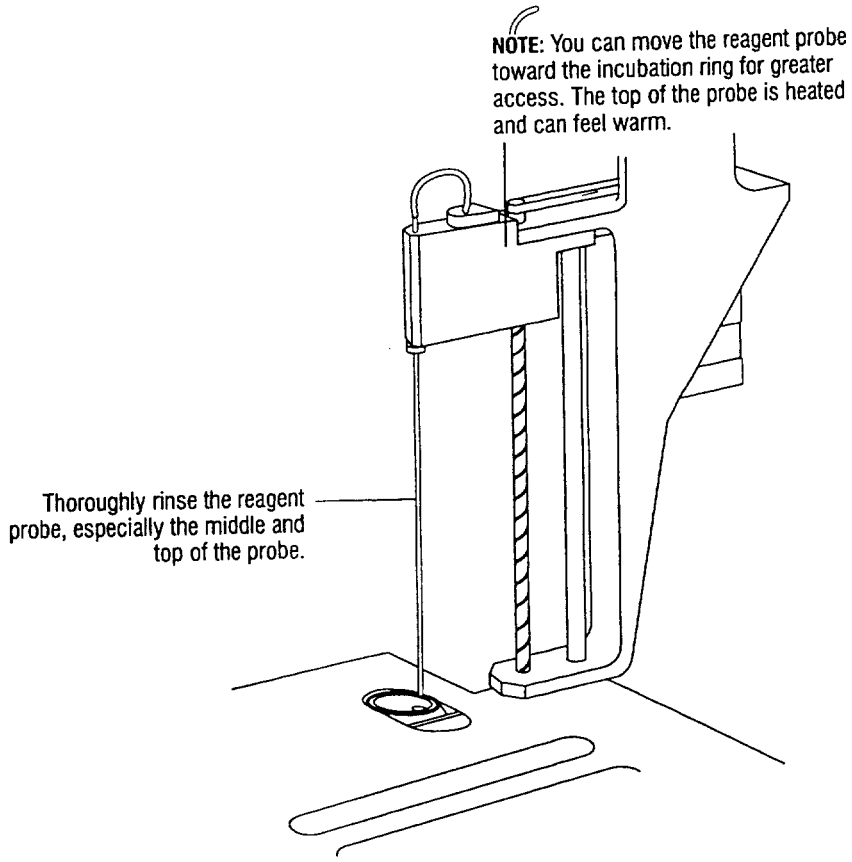

4. Install the reagent probes cover.

Cleaning the Ancillary Probe

BIOHAZARD: Refer to Appendix A, *Protecting Yourself from Biohazards*, for recommended precautions when working with biohazardous materials.

WARNING The probe tips are sharp and can cause skin punctures. Be careful not to bend the probes.

NOTE: Ensure that the system is off by selecting System Status, and then Turn Off System.

1. Lift the top cover.
2. Clean the ancillary probe:
   a. Check the probe tip for damage. If the probe is damaged, replace the probe.

174 206

b. Wipe the probe using a downward motion with lint-free tissues or gauze saturated with cleaning solution.

c. Wipe the probe using a downward motion with lint-free tissues or gauze saturated with reagent water.

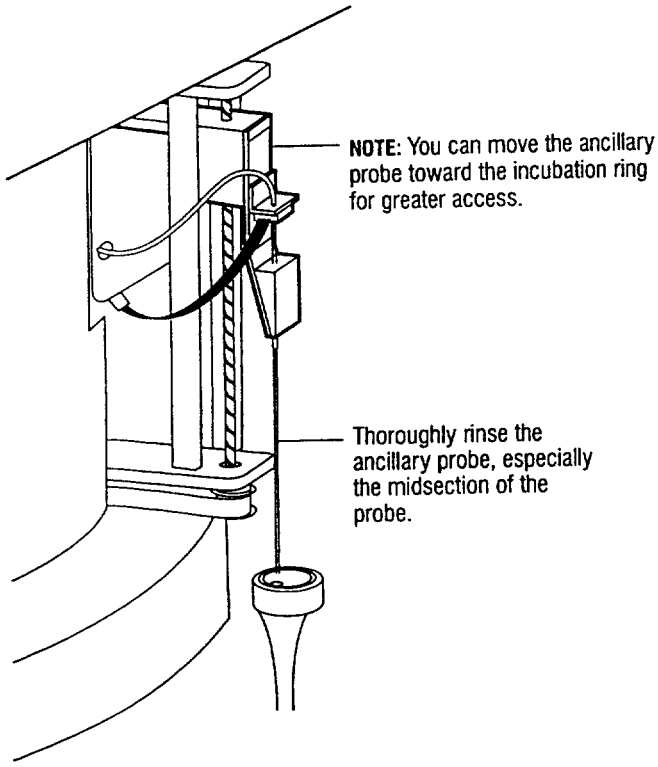

Cleaning the Aspirate Probes

BIOHAZARD: Refer to Appendix A, *Protecting Yourself from Biohazards*, for recommended precautions when working with biohazardous materials.

WARNING The probe tips are sharp and can cause skin punctures. Be careful not to bend the probes.

CAUTION: Ensure that you do not crimp the tubing. Crimped tubing can affect assay performance.

NOTE: Ensure that the system is off by selecting System Status, and then Turn Off System.

1. Carefully lift the probe arm up to the highest position.
2. Wipe the probe with lint-free tissues or gauze saturated with cleaning solution.

175 206

3. Wipe the probe with lint-free tissues or gauze saturated with reagent water.

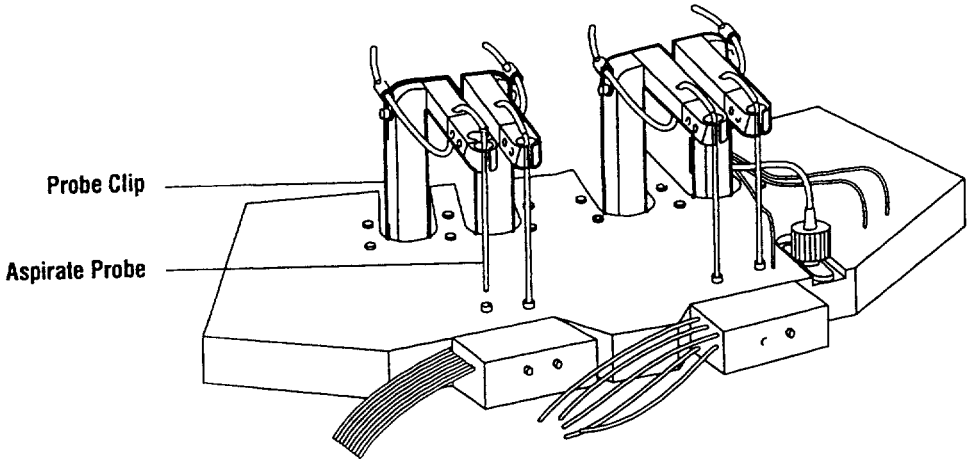

CAUTION: Ensure that each probe clip is in its locked position to hold the probe firmly in place. Failure to do so will cause damage to the probe.

4. Close the top cover.

Cleaning the Cuvette Waste Area

BIOHAZARD: Refer to Appendix A, *Protecting Yourself from Biohazards*, for recommended precautions when working with biohazardous materials.

NOTE: Ensure that the system is off by selecting System Status, and then Turn Off System.

1. Remove the left waste door.

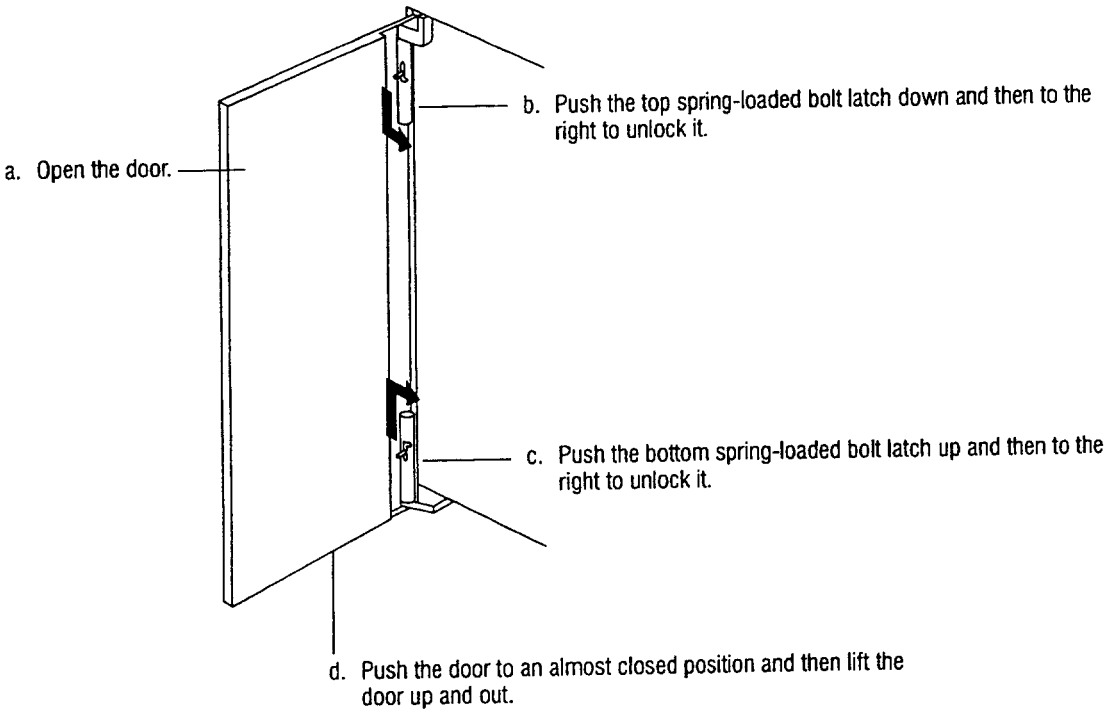

2. Remove any empty sample tip trays and covers from the tip tray bin.

171 208

3. Remove the tip tray bin.

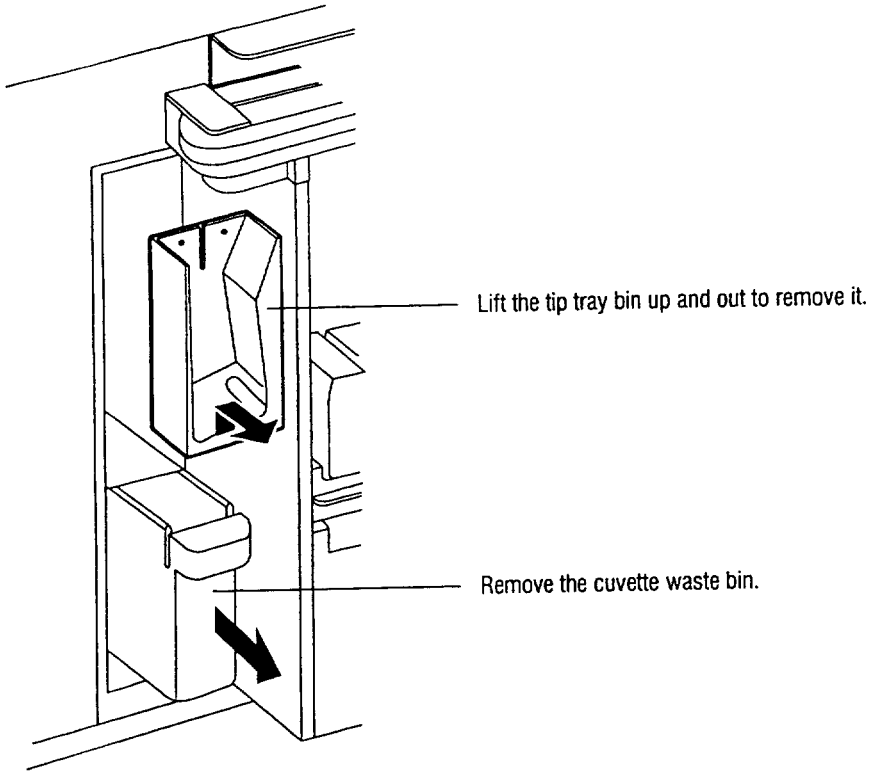

4. Remove the cuvette waste bin and empty it.

5. Remove the cuvette waste chute.

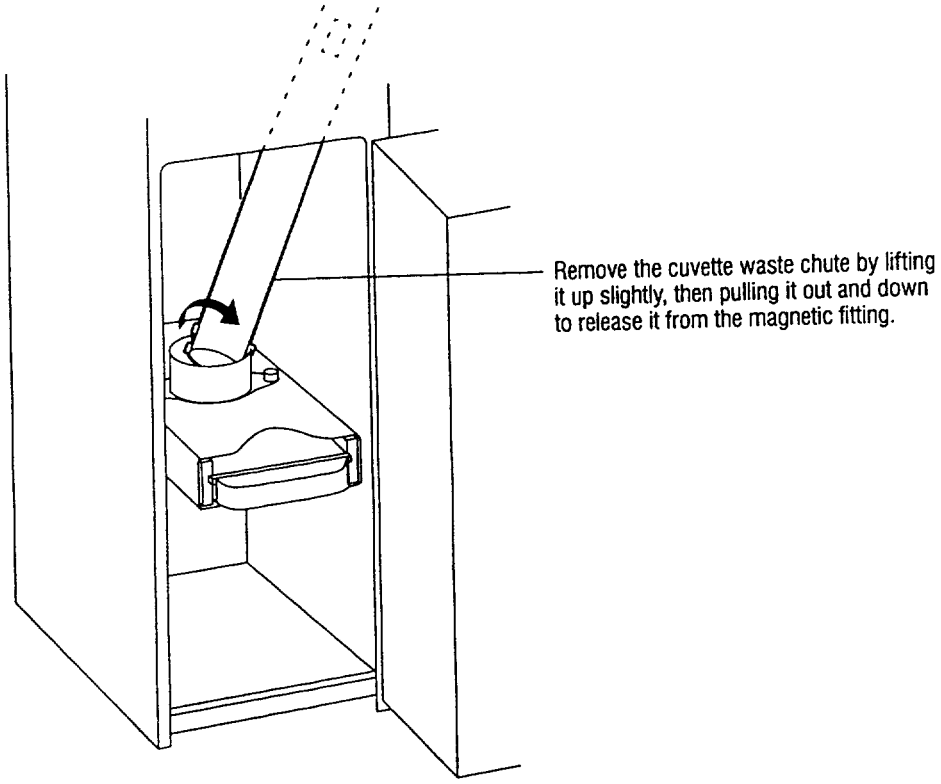

6. Clean the cuvette waste reservoir:
   a. Open the cuvette waste bin drawer.
   b. Wipe the reservoir with tissues or gauze saturated with cleaning solution.
   c. Rinse the reservoir with tissues or gauze saturated with reagent water.

d. Dry the reservoir.

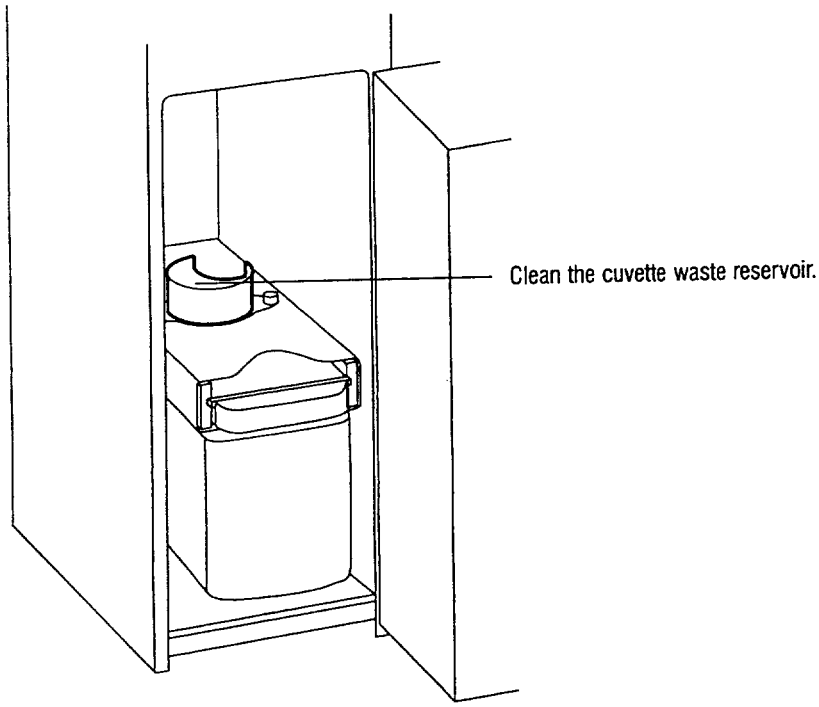

7. Clean the cuvette waste chute:
   a. Use a bottle or sponge brush to clean the chute.
   b. Rinse the chute with water.
   c. Thoroughly dry the chute.

⚠ **CAUTION:** Ensure that you do not pinch or trap cables or tubing when installing the chute.

8. Install the cuvette waste chute:
   a. Place the locator pins at the bottom of the chute in the reservoir.

b. Push up the top of the chute until it attaches to the magnetic fitting.

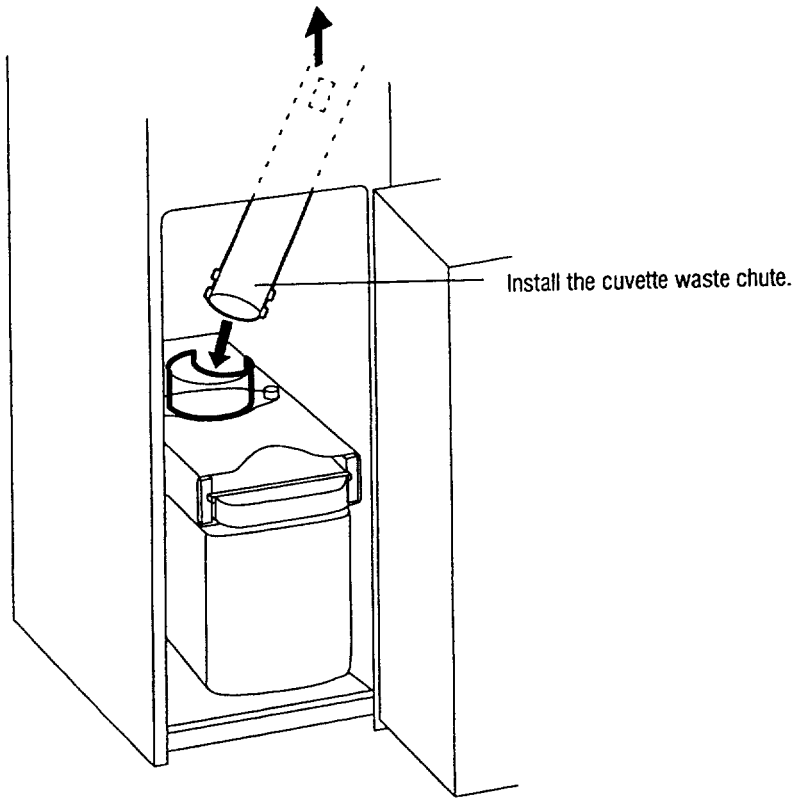

9. Install the tip tray bin.
10. Install the cuvette waste bin in the drawer and close the drawer.
11. Install the left waste door, lock the latches, and close the door.

Cleaning the Air Filter

NOTE: Ensure that the system is off by selecting System Status, and then Turn Off System.

1. Lift the top cover.
2. Remove the reagent probes cover and the panel over the water and waste module (reagent fluidics cover).

181 212

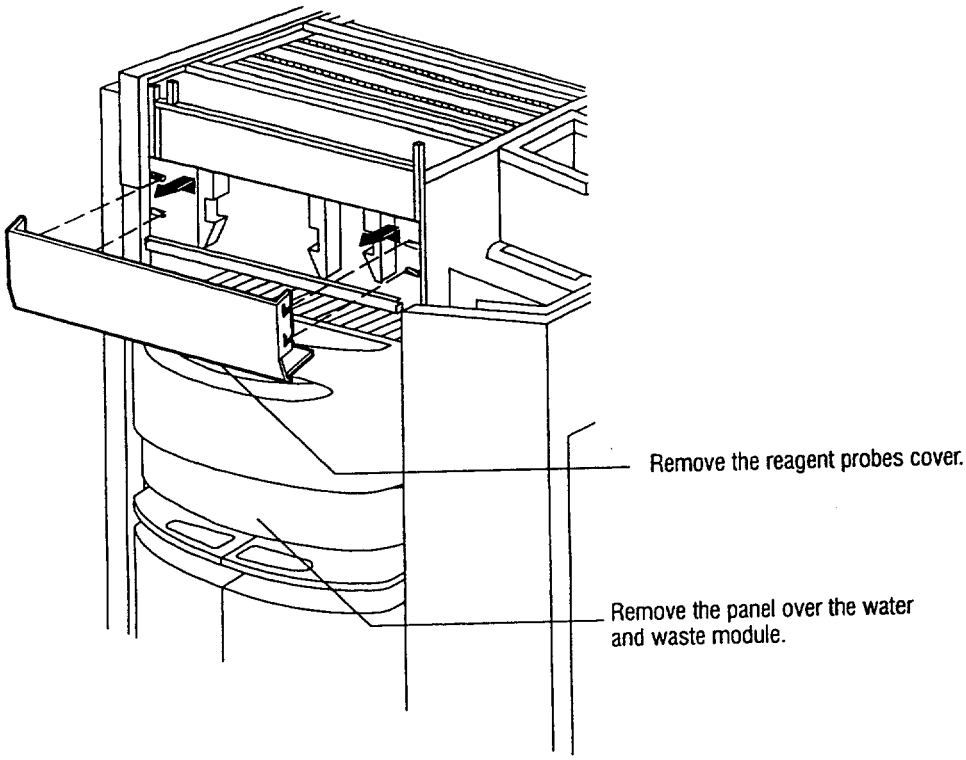

3. Remove the three screws on the back panel.
4. Carefully lift the back panel up, and then over and out to remove it.

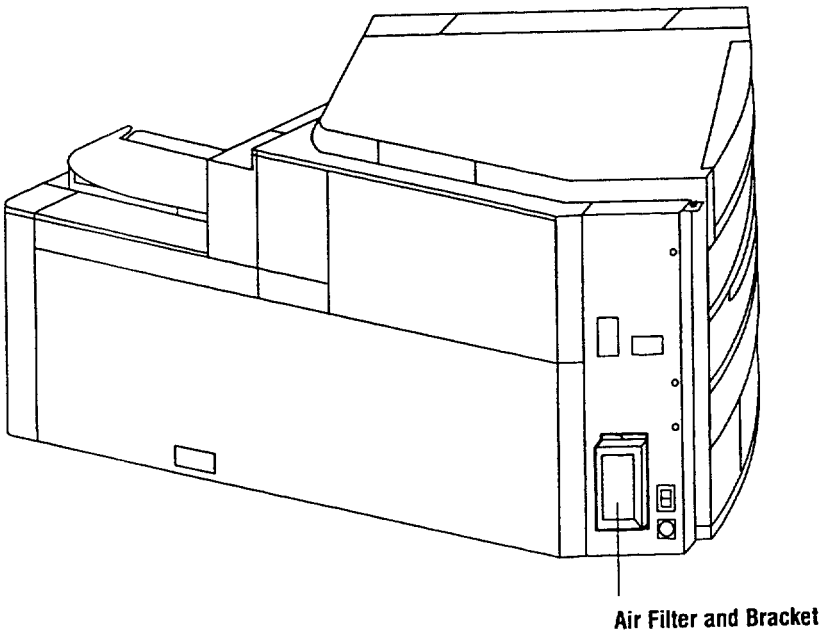

5. Pinch the air filter and remove it from the bracket.

182 213

CAUTION: Avoid rinsing the air filter with cleaning solution.

6. Rinse the air filter with water and allow it to dry thoroughly.

CAUTION: Do not install a wet or damp air filter.

7. Install the spare, dry air filter in the bracket.
8. Install the back panel and secure the three screws.
9. Install the reagent probes cover and the panel over the water and waste module (reagent fluidics cover).

As-Needed Maintenance

Use this section to replace the cleaning solution and to clean components when they are dirty.

You can clean the following components with cleaning solution:

- probe rinse stations
- reagent probe shutter
- primary reagent area and reagent slides
- covers and pointing device
- sample racks

Ensure that the system is off by selecting System Status, and then Turn Off System.

Replacing the Cleaning Solution

You can replace cleaning solution at any time.

WARNING Cleaning solution contains sodium hypochlorite. When handling cleaning solution, follow appropriate chemical safety guidelines, which include wearing gloves, protective eye shield, and a laboratory coat.

NOTE: Perform the recommended cleaning procedure using the Chiron Diagnostics Cleaning Solution for the ACS:Centaur system to achieve optimum assay and system performance. Do not use other cleaning solutions.

1. Open the right waste door.
2. Remove the cleaning solution bottle:

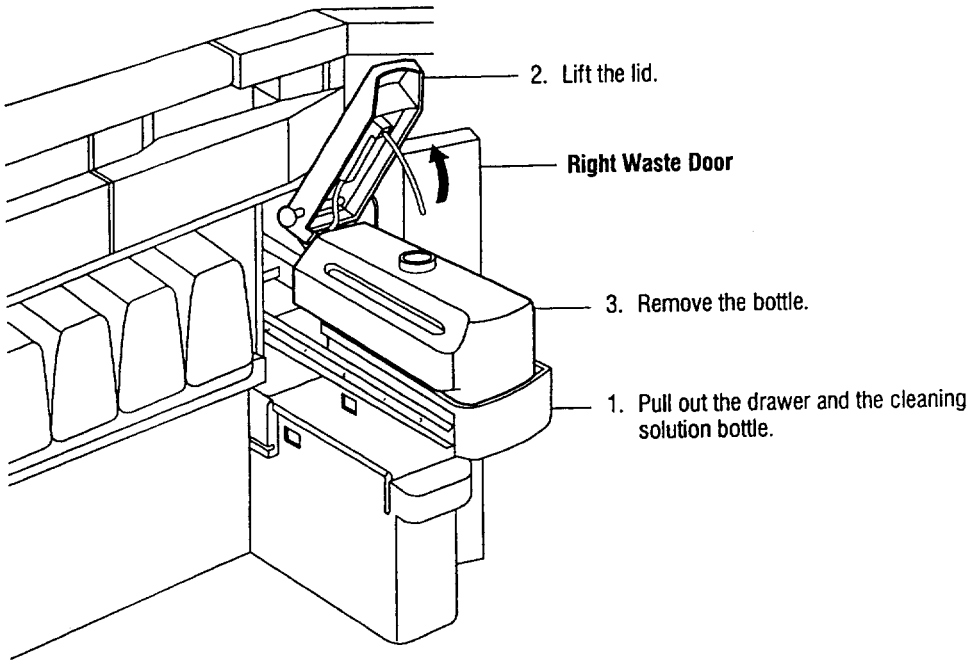

3. Remove the septum cap and empty any cleaning solution from the bottle.
4. Prepare the cleaning solution:
   a. Carefully pour a pack of concentrated Chiron Diagnostics Cleaning Solution into the cleaning solution bottle.
   b. Fill the bottle with reagent water.
   c. Place the septum cap on the bottle.
5. Install the bottle on the system.
6. Lower the lid onto the bottle, ensuring that the tubing is in the bottle.
7. Push in the drawer.
8. Close the right waste door.

Cleaning the Probe Rinse Stations

You can clean the rinse stations for the three reagent probes and the ancillary probe.

BIOHAZARD: Refer to Appendix A, *Protecting Yourself from Biohazards*, for recommended precautions when working with biohazardous materials.

WARNING The probe tips are sharp and can cause skin punctures. Be careful not to bend the probes.

185 216

1. Lift the top cover.
2. Use a disposable transfer pipette to add 0.5 to 1.0 mL of cleaning solution to the rinse stations.
3. Clean inside the rinse stations using a small bristle brush saturated with cleaning solution.
4. Gently insert the brush into the rinse station to a depth of 6.3 cm (2.5 in), and swirl the brush inside the rinse station.

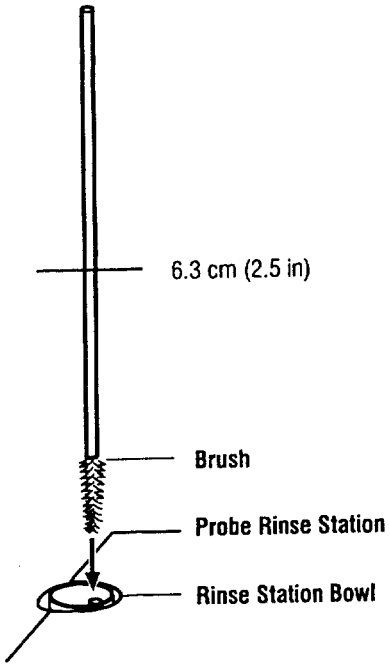

5. Remove the brush.
6. Clean the rinse station bowl.
7. Close the top cover.

Cleaning the Reagent Probe Shutter

BIOHAZARD: Refer to Appendix A, *Protecting Yourself from Biohazards*, for recommended precautions when working with biohazardous materials.

1. Remove the reagent probes cover.
2. You can push the probes toward the incubation ring.
3. Remove the reagent probe shutter:
   a. Lift the shutter drive arm up and off the shutter drive.
   b. Slide the shutter to the left until the screw slots are under the screws.

c. Lift out the shutter.

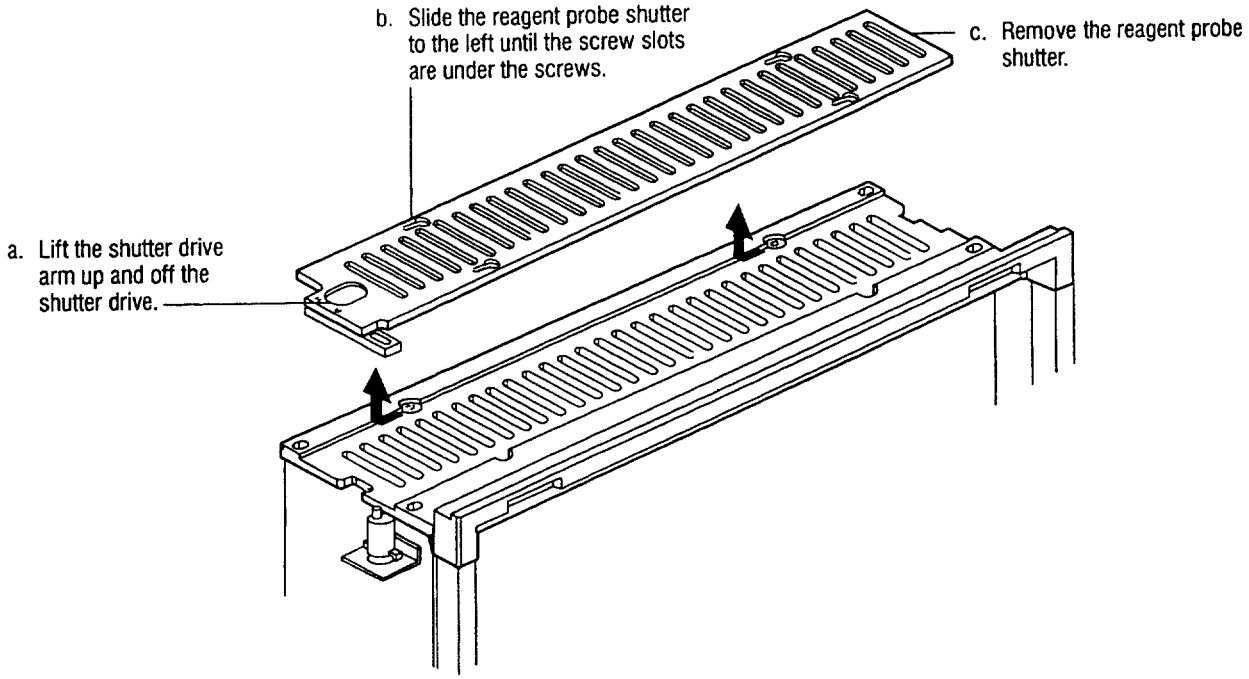

4. Clean the shutter:
   a. Soak the shutter in cleaning solution.
   b. Rinse the shutter with water.
   c. Thoroughly dry the shutter.
5. Wipe the surface under the shutter with tissues or gauze saturated with cleaning solution.
6. Wipe the surface under the shutter with tissues or gauze saturated with water.
7. Install the shutter.
8. Install the reagent probes cover.

Cleaning the Primary Reagent Compartment and Reagent Slides

BIOHAZARD: Refer to Appendix A, *Protecting Yourself from Biohazards*, for recommended precautions when working with biohazardous materials.

1. Open the primary reagent door.
2. Wipe excess water from the primary reagent compartment.

181 218

3. Wipe the surfaces of the primary reagent compartment with tissues or gauze saturated with cleaning solution.
4. If reagent has spilled onto the reagent slides, wipe the reagent slides with tissues or gauze saturated with cleaning solution.
5. Wipe the surfaces of the primary reagent compartment with lint-free tissues or gauze saturated with water.
6. Dry the primary reagent compartment.
7. Close the primary reagent door.

Cleaning the Covers and Pointing Device

BIOHAZARD: Refer to Appendix A, *Protecting Yourself from Biohazards*, for recommended precautions when working with biohazardous materials.

1. Carefully wipe the following components with tissues or gauze saturated with cleaning solution:
   - exterior covers
   - sample entry queue
   - sample exit queue
   - ancillary entry
   - Stat entry queue
   - pointing device
   - system fluids tray
   - tray under the system fluids reservoirs
   - tray under the water and waste bottles
2. Rinse the components with tissues or gauze saturated with water.

Cleaning the Sample Racks

BIOHAZARD: Refer to Appendix A, *Protecting Yourself from Biohazards*, for recommended precautions when working with biohazardous materials.

1. Soak the racks in cleaning solution for approximately 10 minutes.
2. Rinse the racks with water.
3. Allow the racks to dry thoroughly.
4. Ensure that each position on the rack has a clip.

If required, install clips in the rack.

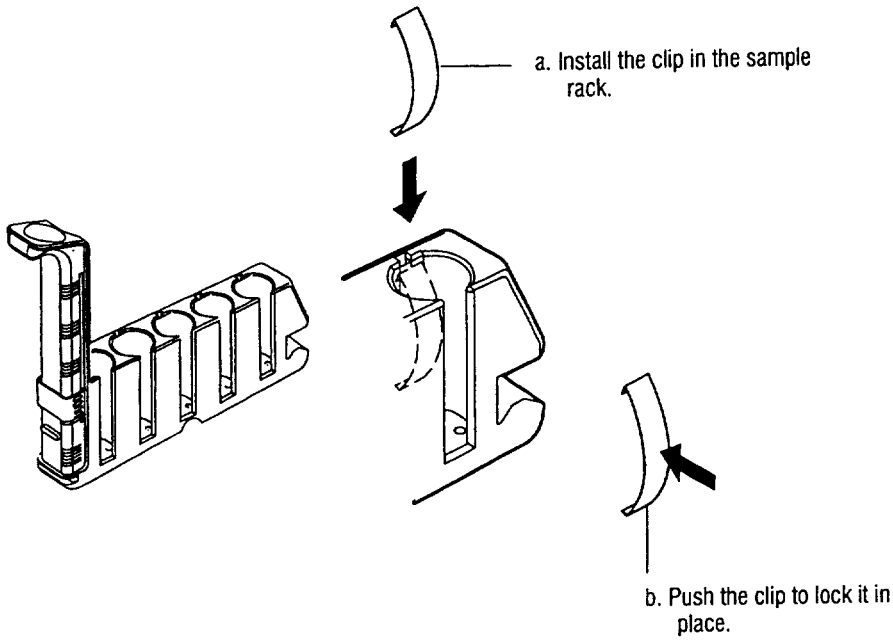

187 220

8 Troubleshooting

Investigating System Problems 8-3

Solving Event Codes 8-4

Investigating System Problems

Use this section to focus your efforts in resolving system problems.

NOTE: Component problems can affect calibrations, controls, patient results, precision, and proficiency testing.

1. Visually inspect the system.
   - Do you see evidence of leaks under or around the system? If aspirate probes 1 and 2 are reversed, then overfilling, leaks, and cuvette jams can result.
   - Do used cuvettes show complete aspiration and removal of solid pellet? A residual grey film on used cuvettes from Folate, TSH, FT4, and ThCG assays is acceptable.
   - Is there any crystallization of Base Reagent around the outside edges of the luminometer?
   - Do you see air bubbles in the tubing? Does tubing have any discoloration, obstructions, twists, crimps, nicks, severe angles, or other deformities and restrictions? Is tubing trapped between covers? Is the peristaltic pump tubing too tight, flat, or leaking?
   - Are probes clean on the outside? Are there any obstructions on the inside? Are probes straight and centered over the wash or rinse ports?
   - Do the water filters have air bubbles, debris, or leaks?
2. Select the System Status symbol and observe for patterns of red and yellow.
   - To investigate the status of system supplies, select Supplies.
   - To investigate the status of reagents, select Reagents.
   - To investigate the status of samples, select Samples.
   - To verify that the system received all required routine cleaning and maintenance, select Maintenance.
   - To view system events including errors and to access diagnostic procedures, select Event Log.
   - To perform manual operations and diagnostic tests, select Diagnostic Tools.

Solving Event Codes

Use this procedure to identify errors and access online information about possible causes and procedures.

1. At the Workspace, select the System Status symbol.
2. Select **Event Log**.

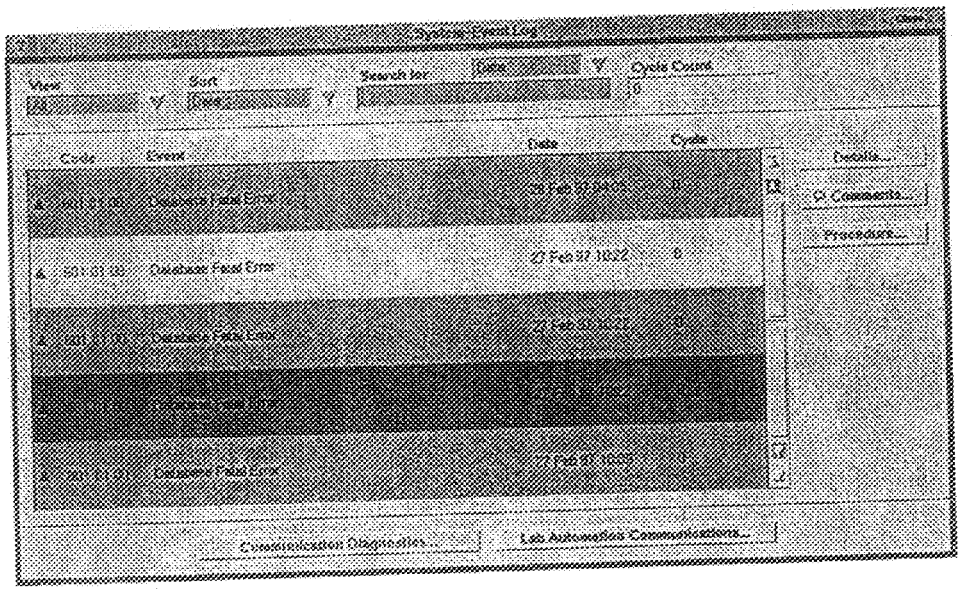

3. Select the appropriate view and complete the tasks to identify the event you want to solve.
   - To organize the events in chronological order with the most recent message at the top, select Date in Sort.
   - To organize the events by failures and warnings, select Severity in Sort.
   - To organize the events by subsystem, select Subsystem in Search.
   - To display a specific event code, select Event Code in Search, and then enter the event code.
4. Locate the possible causes and corrective action procedures for the error.
   a. Select Procedure.
   b. Select **Search** from the online information window.
   c. Enter the event code. **Enter**.
   d. Select **Enter**.
5. Perform the appropriate procedure.

   You can access detailed procedures and illustrations by selecting Procedure.
6. If the procedure does not correct the problem or if the problem occurs again, call Chiron Diagnostics.

9 Setup

Defining Test Options 9-3
Modifying Test Definitions 9-3
Modifying Reference Ranges 9-4
Defining Test Profiles 9-5
Defining Ratio Tests for Calculated Parameters 9-6
Defining Off-System Tests 9-7

Selecting Sample Handling Options 9-8
Selecting Sample Identification 9-8
Selecting Sample Aspirations 9-8
Selecting Sample Tube Types 9-8
Defining Repeats 9-9

Adjusting the Time 9-10

Defining Printing Options 9-11
Selecting a Printer 9-11
Selecting Paper Size 9-11
Entering a Report Header 9-12

Defining System Passwords 9-13

Defining Sample Barcode Options 9-14
Selecting the Barcode Symbology and Format 9-14
Defining Custom Barcode Labels 9-14

Defining LIS Communication Options 9-16

Defining Test Options

You can define and modify test options for the ACS:Centaur system:

- test definitions
- reference ranges
- test profiles
- ratio tests for calculated parameters
- off-system tests

Modifying Test Definitions

NOTE: Some tests have parameters that you cannot edit.

1. At the workspace, select **Setup**.
2. Select **Test Summary**.
3. Select a test.
4. Select **Definition**.
5. Select **Edit**.
6. Complete the appropriate tasks.

If you want to . . .	*Then . . .*
enter the test name that displays at the Worklist–Schedule window	enter the name in **Display**.
enter the test name on printed reports	enter the name in **Print**.
enter the LIS code for the test	enter the LIS code in **LIS Code**.
use a reagent beyond its expiration date	select **Use Beyond** or **Do Not Use Beyond** in Opened Stability.
enter the number of replicates for a patient or a control	select a number from 1 to 3 in **Replicates**.
review results before the system reports results	select **Hold** for Sample Repeat.
report a result without reporting the patient name or PID	select **Anonymous**.

1a 2005

If you want to . . .	*Then . . .*
edit qualitative result definitions	select **Result Calculation.**
enter the original system values for the definitions	select **Reset Defaults.**
enter the type of pack	select a type in **Pack Type.**

7. Select **Save.**

Modifying Reference Ranges

NOTE: Some tests have parameters that you cannot edit.

1. At the workspace, select **Setup.**
2. Select **Test Summary.**
3. Select a test.
4. Select **Ranges.**
5. Select **Edit.**
6. Complete the appropriate tasks.

If you want to enter or edit . . .	*Then . . .*
name of the range	enter the name in **Range.**
low limit or high limit for a reference range, check range, or linearity	a. Enter the low limit in **Low Limit.** b. Enter the high limit in **High Limit.**
gender	select either **M** for male or **F** for female.
age	enter the youngest age on the left and the oldest age on the right.
automatically scheduled tests or profiles for low or high results	select **Reflex Tests.**
more restrictive values for Check Range or Linearity	enter more restrictive values in **Check Range** or **Linearity.**
whether to repeat tests with results outside the Check Range or the Linearity range limits	select **Repeat if <** or **Repeat if >.**

195 2010

If you want to enter or edit . . .	*Then . . .*
low limit, below which the system reschedules the test	a. Select **Repeat if <** (less than) **Conc Range**. b. Enter a value in **Dilution Point**. c. Select a factor in **Dilution**.
high limit, above which the system dilutes and reschedules the test	a. Select **Repeat if >** (greater than) **Conc Range**. b. Enter a value in **Overdilution Point**.

7. You can reset the parameters to the default values:
   a. Select **Reset Defaults**.
   b. Select an option:
      - **All** to reset all ranges and parameters to the default values
      - **Ranges** to reset the ranges to the default values
8. You can display or edit the limits of the ranges for reflex tests:
   a. Select **Reflex Tests**.
   b. Select an option for a range:
      - **Schedule if <** to schedule the selected test if the result is less than the low limit of the range
      - **Schedule if >** to schedule the selected test if the result is greater than the high limit of the range
   c. Select **Continue**.
9. Select **Save**.

Defining Test Profiles

1. At the workspace, select **Setup**.
2. Select **Profile Summary**.
3. Select **Profile Definition**.
4. Select **Add Test Profile**.
5. Enter the name of the test profile in **Profile**.
6. You can enter the LIS Code in **LIS Code**.
7. Select the tests that you want the profile to include.
8. Select **Save**.

Defining Ratio Tests for Calculated Parameters

You can define the ratio tests for calculated parameters such as Free Thyroxine Index (FTI) and Red Blood Cell Folate (RBC Folate). The ACS:Centaur system calculates the FTI index and RBC folate values using direct measurement, equations, and off-system tests.

1. At the workspace, select **Setup**.
2. Select **Test Summary**.
3. Select **Add Ratio**.
4. Select **Edit**.
5. Complete the appropriate tasks.

If you want to . . .	*Then . . .*
enter the name	enter the name in **Test**.
enter the LIS code for the test	enter the LIS code in **LIS Code**.
review the result before the system reports the result	select **Hold**.
enter the units	select or enter a unit of measure in **Units**.
enter the number of decimal places	select a number of decimal places from 0 to 3 in **Decimal**.
enter a reference range	a. Enter the low limit in **Low Limit**. b. Enter the high limit in **High Limit**. A flag appears with results beyond the reference range.
enter a ratio definition or calculation formula	select or enter the formula (without spaces) in **Formula**: + to add – to subtract * to multiply / to divide (and) to specify order of calculations, using up to 4 sets
enter a variable for each letter in the formula	select a variable in **Variable**.

6. Select **Save**.

Defining Off-System Tests

An off-system test is a test that the ACS:Centaur system does not perform, but can report. You can define the tests that are required for ratio test definitions but are not performed by the ACS:Centaur system. Off-system test results can also appear on collated reports.

1. At the workspace, select **Setup**.
2. Select **Test Summary**.
3. Select **Add Off-System**.
4. Select **Edit**.
5. Complete the appropriate tasks.

If you want to . . .	*Then . . .*
enter the name	enter the name in **Test**.
enter the LIS code for the test	enter the LIS code in **LIS Code**.
review the result before the system reports the result	select **Hold**.
enter the units	select or enter a unit of measure in **Units**.
enter the number of decimal places	select a number of decimal places from 0 to 3 in **Decimal**.
enter a reference range	a. Enter the low limit in **Low Limit**. b. Enter the high limit in **High Limit**. A flag appears with results beyond the reference range.

6. Select **Save**.

Selecting Sample Handling Options

You can select several sample handling options:

- sample identification
- optimization of sample aspiration
- sample tube types
- repeats

Selecting Sample Identification

1. At the workspace, select **Setup**.
2. Select **Summary**.
3. Select **Barcode & Tube Type**.
4. Select **SID & Rack ID** or **Rack ID Only**.
5. Select **Save**.

Selecting Sample Aspirations

You can optimize the sample aspiration:

- to optimize throughput or to run tests in the order of detection
- to maximize the number of completed tests or to maximize the usable volume in the sample cup

1. At the workspace, select **Setup**.
2. Select **Summary**.
3. Select **Sample Handling**.
4. Select **In Random Access with Optimized Throughput** or **In the Order the System Detects Samples** in Run Tests.
5. Select **To Maximize the Number of Tests Completed** or **To Maximize the Usable Volume** in Run Samples.
6. Select **Save**.

Selecting Sample Tube Types

You can select four types of sample tubes to use on the system. Each rack holds five sample tubes of the same type.

1. At the workspace, select **Setup**.

2. Select **Summary.**
3. Select **Barcode & Tube Type.**
4. Select up to four types of sample tubes.
5. Select **Save.**

Defining Repeats

You can set up the system to hold samples and perform repeats, or to remove samples and reload repeats. You can also set up the system to repeat a test if the system detects a short sample or a clot.

1. At the workspace, select **Setup.**
2. Select **Summary.**
3. Select **Sample Handling.**
4. Complete the appropriate task.

If you want to . . .	*Then select . . .*
repeat the test for an insufficient sample	**Repeat if Insufficient Sample is Detected.**
repeat the test when the system detects clots	**Repeat if Clot is Detected.**
hold samples and perform repeats	**Hold All Samples for Repeat & Reflex Tests.**
remove samples and reload repeats	**Operator Loads Samples for Repeat & Reflex Tests.**

5. Select **Save.**

Adjusting the Time

Use this procedure to adjust the time. The calendar and clock are powered by a long-life battery in order to maintain the correct date and time even if the power is turned off.

1. At the workspace, select **Setup**.
2. Select **Summary**.
3. Select **Additional Options**.
4. Enter the number of minutes to adjust the time in **Time Correction**.
5. Select **Save**.

v1 230

Defining Printing Options

You can select among several types of printers and two standard paper sizes. You can also add a header that prints on the reports.

Selecting a Printer

1. At the workspace, select **Setup**.
2. Select **Summary**.
3. Select **Print Options**.
4. Select a printer in **Printer**.
5. Select **Save**.

Selecting Paper Size

1. At the workspace, select **Setup**.
2. Select **Summary**.
3. Select **Print Options**.
4. Select a paper size:
   - US letter (21.6 x 27.9 cm, or 8.5 x 11 in)
   - A4 letter (21.1 x 29.2 cm, or 8.313 x 11.5 in)
5. Select **Save**.

Entering a Report Header

1. At the workspace, select **Setup**.
2. Select **Summary**.
3. Select **Print Options**.
4. Enter the header you want to appear on reports in **Report Header**.
   You can enter up to 80 characters and you can have up to six lines of text.
5. Select **Save**.

203 204

Defining System Passwords

You can assign operator passwords and functions for two levels of security. Operators in the general class have no passwords.

1. At the workspace, select **Setup**.
2. Select **Summary**.
3. Select **Security**.
4. Enter a password for User 1 or User 2.
5. Select a function and a class.
6. Select **Save**.

Defining Sample Barcode Options

You can select up to four barcode symbologies to use in your laboratory with patient sample barcodes. For most symbologies, you can select the following:

- the format
- whether to use check digits at the end of the barcode
- whether to use the SID mapping option

NOTE: Code 128 is always active.

Selecting the Barcode Symbology and Format

1. At the workspace, select **Setup**.
2. Select **Summary**.
3. Select **Barcode & Tube Type**.
4. Select a barcode symbology.
5. Select **Fixed** or **Variable** in Type.
6. Enter the number of characters in **Length** for a barcode of fixed length.
   Enter **0** (zero) for a barcode of variable length.
7. Select **Check Digit** if the barcode uses a check digit.
8. Select **Save**.

Defining Custom Barcode Labels

If your laboratory creates its own barcode labels, use this procedure to specify the characters in the patient sample barcode that you want the ACS:Centaur system to read as the SID code. The ACS:Centaur system accepts SID codes up to 13 characters long. If the SID code is embedded in a longer barcode, use the SID mapping option to specify the characters of the SID code.

The SID mapping option affects patient sample barcode labels. This option does not affect the barcode labels for ACS controls, ACS calibrators, or ACS ancillary reagents.

NOTE: If you are using Code 128, you must exclude the ASCII characters ESC, Bell, and CR (Return) from your SID codes because they are reserved for use in the ACS calibrator and control barcode labels.

1. At the workspace, select **Setup**.
2. Select **Summary**.

V V75

3. Select **Barcode & Tube Type.**
4. Select a barcode symbology.
5. Select **Fixed** or **Variable** in Type.
6. Enter the number of characters in Length for a barcode of fixed length.
   Enter **0** (zero) for a barcode of variable length.
7. Select **Check Digit** if the barcode uses a check digit.
8. Define the SID code by selecting 13 characters to appear as an SID in the worklist.
9. Select **Save.**

206 231

Defining LIS Communication Options

You can configure the communication options for the ACS:Centaur system and your LIS to automatically transfer worklist requests and results to and from an LIS.

To automatically transfer worklist requests and results, your laboratory can use barcoded samples or transfer the information using the rack ID. Your LIS must support the options that you select on the ACS:Centaur system.

1. At the workspace, select **Setup**.
2. Select **Summary**.
3. Select **LIS Communication**.
4. Select the options for your LIS:
   - Select **ASTM** in Protocol.
   - Select the baud rate.
   - Select the data bits.
   - Select the stop bits.
   - Select the parity.
   - Enter the system ID.
   - Enter the LIS ID.
   - Enter the timeout in seconds for no response, interframe, query, and connection delay.
5. Select the options that you want the ACS:Centaur system to perform:
   - System automatically queries the LIS for requests
   - System automatically sends all results to the LIS except results on hold
   - Collate patient results before sending to the LIS
   - Send and receive Rack IDs
   - Remove leading spaces from SIDs
   - Error detection
6. Select **Save**.

Appendixes

Page

Appendix A: Protecting Yourself from Biohazards A-1

Appendix B: Services and Supplies B-1

Addresses and Communication Numbers B-1

Standard Instrument Warranty and Service Delivery Policy B-3

- Warranty Period B-3
- Warranty Service During Normal Hours B-3
- Extent of a Warranty Service Call B-3
- Warranty Service Outside Normal Hours B-4
- Replacement of Parts B-4
- Design Changes and Retrofitting of Instruments B-4
- Key Operator Designation B-4
- OSHA Requirements (US only) B-4
- Warranty Exclusions B-5
- Limitations of Chiron Diagnostics's Original Warranty B-6

Supplies and Accessories B-6

Appendix C: Preinstallation Site Requirements C-1

Instrument C-1

Water Supply C-1

Drainage System C-2

Delivery C-2

Communications C-2

Environment C-2

Appendix D: Installing and Relocating D-1

Appendix E: Reagents and Water Quality E-1

System Reagents E-1

Reagent Water Quality E-1

- Introduction E-1
- What is Reagent Water? E-2
- Purifying Water E-3

Maintaining Water Quality E-3
Problems Caused by Water E-5

Appendix F: Specifications F-1
Dimensions F-1
Microprocessor (CPU) Specifications F-1
Printer Specifications F-2
Environmental Specifications F-2
Outputs F-2
Luminometer Specifications F-2
Electrical Ratings and Power Requirements F-3
Primary Sample Tube Specifications F-3
Sample Transfer Cups and Tubes Specifications F-4
Microsample Containers Specifications F-4

Appendix G: System Symbols G-1

Appendix H: References H-1

Appendix A: Protecting Yourself from Biohazards

This appendix summarizes the established guidelines for handling laboratory biohazards. This summary is based on the guidelines developed by the National Institutes of Health (NIH), the Centers for Disease Control (CDC), and the NCCLS Document M29, Protection of Laboratory Workers from Infectious Disease Transmitted by Blood and Tissue.[7]

Use this summary for general information only. It is not intended to replace or supplement your laboratory or hospital biohazard control procedures.

By definition, a biohazardous condition is a situation involving infectious agents biological in nature, such as the hepatitis B virus, the human immunodeficiency virus (HIV), or the tuberculosis bacterium. These infectious agents may be present in human blood and blood products and in other body fluids.

The major sources of contamination when handling potentially infectious agents are:

- hand-to-mouth contact
- hand-to-eye contact
- direct contact with superficial cuts, open wounds, and other skin conditions that may permit absorption into subcutaneous skin layers
- splashes or aerosol contact with skin and eyes

To prevent accidental contamination in a clinical laboratory, strictly adhere to the following procedures:

- Wear gloves while servicing parts of the instrument that have contact with body fluids such as serum, plasma, urine, or whole blood.
- Wash your hands before going from a contaminated area to a noncontaminated area, or when gloves are removed or changed.
- Perform procedures carefully to minimize aerosol formation.
- Wear facial protection when splatter or aerosol formation are possible.
- Wear protective clothing such as lab coats or aprons when working with possible biohazard contaminants.
- Keep your hands away from your face.
- Cover all superficial cuts and wounds before starting any work.
- Dispose of contaminated materials according to your laboratory's biohazard control procedures.
- Keep your work area disinfected.
- Disinfect tools and other items that have been near any part of the instrument sample path or waste area with 15% v/v bleach.

✓10

- Do not eat, drink, smoke, or apply cosmetics while in the laboratory.
- Do not mouth pipet any liquid, including water.
- Do not place tools or any other items in your mouth.
- Do not use the biohazard sink for personal cleaning such as rinsing coffee cups or washing hands.

To prevent needlestick injuries, needles should not be recapped, purposely bent, cut, broken, removed from disposable syringes, or otherwise manipulated by hand.

Appendix B: Services and Supplies

This section provides information for contacting Chiron Diagnostics and for ordering supplies.

Addresses and Communication Numbers

For ordering accessories and supplies within the United States, call toll free, 1-800-255-3232.

For technical information, and service and repair information within the United States, call toll free, 1-800-255-2121.

Australia:
Australian Diagnostics Corporation Pty. Ltd.
2 Keith Campbell Court
Scoresby, Victoria 3179
Tel: 61-3-9212-8444
Fax: 61-3-9212-8445

Austria:
Ciba Corning Diagnostics GmbH
Traunstr. 46
5026 Salzburg
Tel: 43-662-288110
Fax: 43-662-288119

Belgium:
Ciba Corning Diagnostics s.a./n.v.
Excelsiorlaan 49
B-1930 Zaventem
Tel: 32-2-7207120
Fax: 32-2-7211212

Canada:
Ciba Corning Canada Inc.
90 Gough Road, Unit #1
Markham, Ontario, L3R 5V5
Tel: 905-475-2220
Fax: 905-475-2145

France:
Ciba Corning Diagnostics S.A.
B.P. 109, Parc des Bellevues, Eragny
95613 Cergy Pontoise Cedex
Tel: 1-34-40-40-00
Fax: 1-34-40-40-91

Germany:
Ciba Corning Diagnostics GmbH
Siemensstrasse 3
D-35463 Fernwald
Tel: 0641-4003-0
Fax: 0641-4003111

Hong Kong:
Ciba Corning Diagnostics (H.K.) Limited
20/F Gee Chang Hong Centre
65 Wong Chuk Hang Road
Tel: 852-2814-7337
Fax: 852-2873-4245
Telex: 74673 CCD HX

Italy:
Ciba Corning Diagnostics S.p.A.
Via Roma, 108-Palazzo E
20060 Cassina de' Pecchi (MI)
Tel: 02-95455.1
Fax: 02-95300419

Japan:
Ciba Corning Diagnostics KK
Unosawa Tokyu Building 3F
1-19-15, Ebisu
Shibuya-Ku,
Tokyo 150
Tel: 03-3440-2411
Fax: 03-3440-6999

Korea:
Ciba Corning Korea Ltd.
Kye Myung Building (4F)
Myungil Dong 48-7
Kangdong-Gu
Seoul 134 070
Tel: 82-2-428-5980/8
Fax: 82-2-428-5989

Mexico:
Ciba Corning Diagnostics de Mexico
SA de CV
Av. Periferico Sur No. 6677
Col. Ejidos de Tepepan
Xochimilco, Mexico D.F., C.P. 16018
Tel: 525-641-3815
Fax: 525-641-3440

Netherlands:
Ciba Corning Diagnostics N.V.
Peppelkade 64 D/E
Postbus 111
3990 DC Houten
Tel: 31-3403-50750
Fax: 31-3403-51041

*Use for U.S. produced and distributed products only.

Spain:
Ciba Corning Diagnostics S.A.
Edificio Dublin
Parque Empresarial San Fernando
28831 Madrid
Tel: 341-677-5545
Fax: 341-677-6871

Switzerland:
Ciba Corning Diagnostics AG
Neue Winterthurerstrasse 15
CH-8305 Dietlikon
Tel: 01-833-27-27
Fax: 01-833-62-31

United Kingdom:
Ciba Corning Diagnostics Limited
Colchester Road
Halstead, Essex, CO9 2DX
Tel: 01787-472461
Fax: 01787-475088

United States:
Worldwide Corporate Headquarters
Ciba Corning Diagnostics Corp.
63 North Street
Medfield, MA 02052
Tel: 508-359-7711
800-255-3232
Fax: 508-359-3599

*United States:
U.S. Group Headquarters
Ciba Corning Diagnostics Corp.
115 Norwood Park South
Norwood, MA 0206
Tel: 800-255-3232 (ordering)
800-255-2121 (24-hour technical assistance)
Fax: 617-551-7779

2/13

Standard Instrument Warranty and Service Delivery Policy

Chiron Diagnostics and its authorized distributors provide customers who acquire new Chiron Diagnostics instruments with a one-year comprehensive, but limited, warranty. This limited warranty is designed to protect customers from the cost associated with repairing instruments that exhibit malfunctions due to defects in materials and/or workmanship during the warranty period.

Warranty Period

The warranty period commences upon installation at the customer's location and extends for a period of one year thereafter. The customer, with some exceptions, may purchase additional service coverage beyond the one year warranty period as part of the original instrument acquisition for second or subsequent years beyond the original installation date. The customer's original Purchase Invoice or appropriate Agreement Addendum must indicate the term in months for additional service coverage.

Warranty Service During Normal Hours

The customer may obtain warranty service for instruments during normal business hours by contacting the Chiron Diagnostics location or authorized distributor. Refer to the list of Chiron Diagnostics locations in this section.

Extent of a Warranty Service Call

During the warranty period, Chiron Diagnostics or an authorized distributor will repair the system during normal business hours, at their expense, subject to the exclusions listed below. Chiron Diagnostics or an authorized distributor will initiate a warranty field service call when notified. The call will be considered complete when the instrument is repaired and the customer, or the customer's representative, agrees the system is operating to specifications by signing the appropriate Field Service Report. When service is complete, the customer will receive a copy of the Field Service Report detailing all work performed by the Chiron Diagnostics representative.

Warranty Service Outside Normal Hours

Customers, with some exceptions, may also request warranty service to be delivered outside of normal business hours, including evenings, weekend days, or nationally observed holidays by contacting the Chiron Diagnostics location or authorized distributor. Warranty service performed at these times is subject to a surcharge unless the customer has purchased a service product option that provides warranty service outside normal hours.

Replacement of Parts

In performing warranty service under this agreement, Chiron Diagnostics or its authorized distributors will provide appropriate parts to repair the instrument at no charge with the exception of certain parts or subassemblies that are considered customer maintenance items. Customer maintenance items include, but are not limited to, the following items: lamps, electrodes or sensors (which are covered by a separate warranty), reagents, calibrators, controls, paper, and pens. Consult the appropriate operator's manual for a complete list of maintenance items for any specific model of instrument.

Design Changes and Retrofitting of Instruments

During the warranty period, Chiron Diagnostics reserves the right to change the design or construction of specific models of instruments without incurring any obligation to make such changes available to an individual instrument. If Chiron Diagnostics notifies customers of a change that improves the performance or reliability of their instrument, and requests to retrofit that instrument, customers must agree to allow Chiron Diagnostics or an authorized distributor, at Chiron Diagnostics's expense, to retrofit components or make design changes, which will not adversely affect the instrument's performance characteristics.

Key Operator Designation

Customers will designate a key operator who will be available to Chiron Diagnostics representatives to describe instrument malfunctions by telephone and/or to perform simple adjustments and corrections as requested. If a key operator is not designated or is unavailable when the customer requests service, the delivery of warranty service may be delayed.

OSHA Requirements (US only)

When service is required at a customer location, the customer must provide the Chiron Diagnostics representative with adequate facilities that comply with the regulations of the Secretary of Labor under the Occupational Safety and Health Act (OSHA) of 1970, as amended.

Warranty Exclusions

Chiron Diagnostics or its authorized distributors will provide warranty service to customers during the warranty period, which includes appropriate parts, travel to the location of the instrument, and on-site labor during normal business hours. In addition, Chiron Diagnostics or its authorized distributors will provide warranty service during the warranty period only, and instrument repairs, labor, or replacement parts, as provided during the original warranty period, will not extend the original warranty period.

This warranty will not apply if any of the following events occur:

1. Repairs or modifications have been made to the instrument by someone other than an authorized Chiron Diagnostics representative.
2. The instrument has been operated using accessories and supplies other than Chiron Diagnostics brand accessories, or consumable supplies and/or reagents not having the same grade, quality, and composition as defined in the system operator's manuals.
3. The instrument has not been installed within 90 days of shipment to the customer's facility unless otherwise specified.
4. The customer has not performed appropriate customer maintenance procedures, as outlined in the instrument operator's manual.
5. The instrument has been misused or used for a purpose for which it was not intended.
6. The instrument has been damaged in transit to the customer or damaged by the customer while moving or relocating it without supervision by a Chiron Diagnostics representative.
7. Damage was caused by floods, earthquakes, tornados, hurricanes or other natural or man-made disasters.
8. Damage was caused by Acts of War, vandalism, sabotage, arson, or civil commotion.
9. Damage was caused by electrical surges or voltages exceeding the tolerances outlined in the system operator's manuals.
10. Damage was caused by water from any source external to the instrument.
11. The customer has purchased an alternative agreement whose terms of warranty supersede this agreement.

Chiron Diagnostics or its authorized distributors will invoice customers, at current standard labor and parts rates, for instruments repaired to correct damage or malfunctions due to any of the reasons listed above.

✓ 16

Limitations of Chiron Diagnostics's Original Warranty

Chiron Diagnostics warrants to all customers that service will be performed in a professional manner consistent with the industry. If the instrument is not performing according to its specifications, Chiron Diagnostics will, at its option, repair or replace the instrument. This is the customer's sole and exclusive remedy for breach of warranty.

Other than as stated above, there are no other warranties, express or implied, accompanying either the leasing of the equipment or its sale to the customer at the expiration or termination of this agreement. In addition, the warranties of merchantability and fitness for a particular purpose are disclaimed. In addition, Chiron Diagnostics shall not be liable for any damages caused by delay in providing repair service from any cause. Chiron Diagnostics's liability for breach of this warranty shall be limited to the repair or replacement of defective equipment and shall not include any incidental, contingent, or consequential damages.

Supplies and Accessories

A list of supplies and accessories will be provided to the customer with catalog numbers to assist in the ordering process.

Appendix C: Preinstallation Site Requirements

A Field Service Engineer (FSE) will conduct a site inspection at your site prior to installing an ACS:Centaur system. During the inspection the FSE ensures requirements are met. Areas that are addressed during the site inspection are listed below.

Instrument

- Power Source
- Grounding
- Ambient Temperature
- Relative Humidity
- Work Area
- Flooring
- Special Ventilation
- Service Area
- Power Consumption
- Cycle per Second
- Minimum Amp Protection
- Socket Type

Water Supply

- Reagent Water Type
- Outlet Location
- Outlet Connection
- Temperature
- Pressure/Flow
- Degassing

✓18 249

Drainage System

- Drain Port Inlet
- Drain Port Opening
- Drain Port Height

Delivery

- Access Ways and Openings
- Turning Radius
- Special Equipment
- Elevator Capability
- Facility Modification

Communications

- Telephone Line
- LIS Connection and Cables
- Modem

Environment

The environment must be free of the following elements:

- Electrical Fields
- High Frequency Emissions
- Intense Magnetic Fields
- Drafts
- Direct Sunlight
- Dust
- Corrosive Gasses
- Flammable Gasses
- Vibration
- Radiation Sources
- Radio Fields

219 — 250

Appendix D: Installing and Relocating

CAUTION: An authorized Chiron Diagnostics Field Service Representative should install or relocate your systems. Unauthorized installation or movement can damage your systems and void your warranty and/or service contract.

Contact Chiron Diagnostics when you receive your systems or if you need to relocate your systems within your facility. Call toll free, 1-800-255-2121.

270

251

Appendix E: Reagents and Water Quality

System Reagents

The reagents described in Table E-1 are for In Vitro Diagnostic Use only. Use the reagents until the expiration date stated on the bottle labels. Dispose of Acid and Base reagents using disposal techniques for nonhazardous liquid wastes.

Chiron Diagnostics is not responsible for the performance of the ACS:Centaur system when reagents other than Acid and Base reagents are used.

WARNING Avoid contact of Acid and Base reagents with skin and eyes. Wash hands thoroughly after handling the reagents. If contact with eyes occurs, flush the area with water. If reagent is ingested, call a physician immediately.

Table E-1. System Reagents

Name	Volume	Active Ingredients	Storage
Acid Reagent	1.5L 5000 tests/bottle	5% hydrogen peroxide 0.1N nitric acid	room temperature (18 – 25°C)
Base Reagent	1.5L 5000 tests/bottle	0.25N sodium hydroxide, surfactant	room temperature (18 – 25°C)
Wash 1, Wash 2 Solution	1.5L	phosphate buffered saline, pH 7.2	room temperature (18 – 25°C)
Cleaning Solution	1.5L	0.26% sodium hypochlorite	room temperature (18 – 25°C)

Reagent Water Quality

Introduction

Water quality is an important consideration in the laboratory because it can significantly affect the outcome of laboratory procedures and the measurement of patient samples.[7,8]

This overview discusses reagent water quality guidelines as specified by the National Committee for Clinical Laboratory Standards (NCCLS).[9] Use these guidelines to evaluate the reagent water quality in your laboratory and to determine the best method for obtaining the water quality you need.

Good laboratory practices suggest that you establish a protocol that supports the manufacturer's requirements for the instrument to:

- insure optimum performance of automated laboratory instruments
- eliminate water quality as a source of problems when troubleshooting
- help you to meet requirements for state and federal laboratory certification

What is Reagent Water?

Reagent water is laboratory water that meets specifications for clinical laboratory use.

The NCCLS has defined three grades of reagent water:

- Type I, the highest grade
- Type II, the intermediate grade
- Type III, the lowest grade

Table E-2 lists the NCCLS specifications for the three types of reagent water. Use this information to determine the water quality in your laboratory. Refer to the NCCLS guidelines for common laboratory uses of Type I, Type II, and Type III reagent water.

Table E-2. Reagent Water Specifications

Specification	Type I	Type II	Type III
Maximum bacterial content colony forming units per mL (CFU/mL)*	10 (preferably bacteria free)	1000	not applicable
pH	not applicable	not applicable	5.0–8.0
Minimum resistivity (megohm/cm at 25°C)†	10 (inline measurement by sensor or resistor)	1.0	0/1
Maximum silicate (mg/L)‡	0.05	0.1	1.0
Particulate matter (µm)§	smaller than 0.22 µm	not applicable	not applicable
Organic compounds**	pretreat with activated carbon	not applicable	not applicable

* Bacterial content: The number of colony forming units in water. Bacterial content is a water contaminant you measure to determine water quality.

† Resistivity: The ability of water to resist electrical conduction due to the ion content. Resistivity is the standard test measurement for determining water quality. The higher the resistivity, the lower the ion content and the better the water quality.

222 253

‡ Silicates: Compounds you remove to produce Type I reagent water.

§ Particulate matter: Water is passed through a 0.22 µm filter, and undissolved (insoluble) substances larger than 0.22 µm are removed by the filter.

‖ Organic compounds: Compounds you remove to produce Type I reagent water.

Purifying Water

As with all diagnostic testing procedures, good laboratory practices suggest that you establish a protocol that supports the manufacturer's requirements for selecting the appropriate type of reagent water. You can then produce reagent water in your laboratory by setting up and maintaining a water purification system that uses one or more of the typical laboratory water purification methods described in Table E-3.

Table E-3. Water Purification Methods

Method	Description
Distillation	Changes water from liquid to vapor and leaves behind impurities such as particulates and bacteria
Deionization	Uses synthetic resins to remove ionized impurities by ion exchange
Reverse Osmosis	Forces water under pressure through a semipermeable membrane to remove dissolved solids and organic impurities
Adsorption	Uses activated carbon, clays, silicates, or metal oxides to remove organic impurities
Filtration	Forces water through a semipermeable membrane to remove insoluble matter, emulsified solids, pyrogens, and microorganisms

The quality of the reagent water you produce depends on the quality of the water you start with (source water) and the performance of your water purification system.

To produce the type of water you require, you may need a purification system that uses a combination of methods. For example, if you want to produce Type I water, you need a system that uses adsorption to remove organic impurities, ionization to remove ionized impurities, and filtration to remove particulates. NO TAG illustrates a water purification system that combines adsorption, deionization, and filtration to product Type I water.

Maintaining Water Quality

You can ensure that the reagent water supply in your laboratory consistently meets NCCLS guidelines by:

- storing reagent water properly

- testing for resistivity and contamination
- maintaining your water purification system

Establishing procedures for maintaining reagent water quality is also required for laboratory inspection and accreditation by the College of American Pathologists (CAP).[10]

Storing Reagent Water

Type I reagent water cannot be stored. Use it immediately after you produce it because it degrades quickly and no longer meets Type I reagent water specifications. Additionally, you cannot purchase Type I reagent water because its purity is not reliable.

Store Type II and Type III reagent water in glass or polyethylene bottles. Use it as soon as possible after preparation to reduce the risk of contamination by microorganisms.

Testing Reagent Water

To monitor water quality and detect problems with your water purification system, test reagent water regularly for resistivity and bacterial contamination. You may also want to send reagent water out of the laboratory periodically for independent evaluation. Record your test results and any corrective action.

Refer to the NCCLS specifications for information about recommended water testing methods.[7]

Maintaining your Purification System

Efficient operation and regularly scheduled maintenance of your water purification system is the key to optimizing the performance of the system and consistently obtaining reagent quality water. Preventative maintenance reduces the chance of the purification system introducing additional contaminants into source water and ensures that reagent water retains its purity when it is introduced into the laboratory instrument.

The following are suggested guidelines for maintaining water purification systems to ensure smooth operation and prevent system problems.

For customized water systems:

- Change filters on carbon or membrane filter systems as required
- Use a recirculating pump to optimize performance and reduce contamination
- Filter the source water before treatment in reverse osmosis systems, and recirculate deionizers in closed loops to extend resin life

For distillation systems:

- Check the water vessels regularly for the presence of slippery film
- Clean and disinfect the vessels as required with an agent that rinses well, such as hydrogen peroxide
- Clean the boiler regularly to remove deposits
- Test routinely for contamination

For complete information about operation and maintenance requirements for your water purification system, refer to the manufacturer's specifications.

Problems Caused by Water

Using water that does not meet NCCLS guidelines can cause problems with clinical laboratory systems. Some common problems include:

- contamination of system components
- inaccurate patient and calibration results
- out–of–range quality control results
- deterioration of lyophilized quality control material
- color changes and poor stability and performance of reagents

These problems can be caused by failure to use the appropriate type of reagent water, bacterial contamination, and inadequate maintenance of the water purification system,

Refer to Section 8, *Troubleshooting*, for more detailed information about problems caused by water that does not meet reagent water specifications.

2-25-256

Appendix F: Specifications

This section summarizes the ACS:Centaur system specifications. The design of the ACS:Centaur system meets the requirements of the following agencies:

- UL
- CSA
- IEC
- JIS and MHW
- TUV
- FCC Class A
- VDE Class A
- CE

Dimensions

Depth	1.05 m (41.2 in)
Height	1.27 m (50 in)
Width	1.83 m (72 in)
Total Envelope	178 x 127 cm (70 x 50 in)
Weight	545 kg (1200 lbs)

The system is equipped with casters to enable it to be moved.

Microprocessor (CPU) Specifications

Main CPU	two Sparc® 2 CPU boards, 32-bit microprocessors with integrated numeric coprocessor
Mass Storage	4 gigabyte hard disk drive and 3.5-inch, double-sided, high-density, 1.44 MB, diskette drive
CD-ROM	650 MB storage capacity; Quad speed
Memory	for the User Interface CPU, 32 MB of dynamic, random access memory (RAM); 256 KB of static RAM; 32 KB of read-only memory (ROM)
Monitor	Resolution Size Color

Printer Specifications

The Okidata® OL410e/PS printer is accepted for use with the ACS:Centaur system.

Environmental Specifications

Ambient Operating Temperature	18.0 to 30.0°C
Relative Humidity	24% to 80%, non-condensing
Storage Temperature	0.0 to 50.0°C

Indoor Use Only

Altitude up to 2000 meters

IEC 1010-1 Installation Category I

IEC 1010-1 Equipment Classification Class II

IEC 1010-1 Pollution Degree 1[11]

Outputs

Parallel	one parallel port for the external printer
RS-232C	four serial ports for bidirectional communication: modem, LIS, barcode, and (Uninterruptable Power Supply) UPS
Printer	600 dpi; postscript compatible

Luminometer Specifications

Dark Count Rate	less than 300 counts per second (cps), (25.0°C, gain = 2×10^6)
Mode of Operation	photon counting
Peak Response	420 nm
Spectral Response	300 to 650 nm

227 28

Electrical Ratings and Power Requirements

Power Consumption	2000W maximum
Electrical Requirements	dedicated line required 208–240V ~ 12A, 50/60Hz

Primary Sample Tube Specifications

Tube Size (mm)	Fill Volume (mL)	Acceptable Manufacturer	Brand
10.25 x 50	2.0	Sherwood Medical	Monoject®
10.25 x 64	3.0	Sherwood Medical	Monoject
10.25 x 82	4.0	Sherwood Medical	Monoject
10.25 x 75		Becton Dickinson	Vacutainer®
10.25 x 100		Becton Dickinson	Vacutainer
11.5 x 66	2.7	Sarstedt	Safety Monovette®
11.5 x 75	4.0	Sarstedt	Safety Monovette
11.5 x 92	4.5	Sarstedt	Safety Monovette Luer Monovette
12.4 x 75		Terumo	
13 x 75	2.5	Becton Dickinson	Vacutainer Plus
13 x 75	4.0	Greiner	
13 x 75	5.0	Sherwood Medical	Monoject Corvac®
13 x 75	7.0	Sherwood Medical	Monoject
13 x 100	6.0	Becton Dickinson	Vacutainer Plus
13 x 100	7.0	Sherwood Medical	Monoject Corvac
13.5 x 75		Terumo	
14.5 x 84		Terumo	
15 x 100		Terumo	
15.3 x 57	4.0	Sarstedt	Safety Monovette Luer Monovette
15.3 x 75	6.0	Sarstedt	Safety Monovette
15.3 x 100	8.5	Sarstedt	Safety Monovette
16 x 75		Becton Dickinson	Vacutainer
16 x 75	7.0	Sherwood Medical	Monoject

226 219

Tube Size (mm)	Fill Volume (mL)	Acceptable Manufacturer	Brand
16 x 100		Becton Dickinson	Vacutainer
16 x 100	10.0	Sherwood Medical	Corvac
16 x 100	10.0	Sherwood Medical Greiner	Monoject
16.5 x 92	9.0	Sarstedt	Luer Monovette

Sample Transfer Cups and Tubes Specifications

Tube Size (mm)	Bottom Type	Acceptable Manufacturer
12 x 75	round	Various
13 x 75	round	Becton Dickinson
13 x 100	conical	Chiron Diagnostics Olympus
13 x 100	round	Various
13 x 102	round	Becton Dickinson
16 x 38	conical	Hitachi
16 x 75	round	Becton Dickinson
16 x 80	conical	Smith Kline
16 x 100	round	Various
16 x 102	round	Becton Dickinson

Microsample Containers Specifications

Container Size (mL)	Acceptable Manufacturer	Product
0.5	Kodak	Microsample Cup
1.0	Gilford	Sample Cup
1.3	Sarstedt	Microsample Tube
1.5	Becton Dickinson Terumo	Microtainer Capiject
2.0	Kodak	Microsample Cup

258 260

Appendix G: System Symbols

This section describes the symbols that appear on the exterior of the ACS:Centaur system. The symbols provide you with the location of certain components and with warnings for proper operation.

Symbol	Description
⚠	This symbol appears on the system and in the manual. On the system, this symbol indicates that you should consult the manuals provided with the ACS:Centaur system.
~	This symbol indicates that the input electricity is alternating current.
▭	This symbol alerts you to important information about the fuses.
⏚	This symbol identifies the location of a protective earth (GND) conductor terminal.
☣	This symbol cautions you against the risk of exposure to biohazards.
|	This symbol indicates the main power supply is on.
○	This symbol indicates the main power supply is off.
	This symbol indicates the location of the parallel port for the printer.
1, 2, 3	These numbers indicate the locations of the RS-232 serial ports.
	This symbol indicates the location of the barcode scanner connector.
	This symbol indicates the location of the keyboard connector.
	This symbol indicates the location of the diskette drive.
	This symbol indicates the location of the compact disc drive.

230

Symbol	Description
	This symbol indicates the location of the primary reagent compartment.
	This symbol indicates where ancillary reagent packs are loaded onto the system.
	This symbol indicates where ancillary reagent packs are removed from the system.
	This symbol indicates where Stat samples are loaded onto the system.
UUU	This symbol indicates where cuvettes are loaded onto the system.
	This symbol indicates where sample tips are loaded onto the system.
1	This symbol indicates where waste cuvettes and tips trays are collected.
2	This symbol indicates where waste sample tips are collected.
+	This symbol identifies the system fluid bottle for acid reagent.
−	This symbol identifies the system fluid bottle for base reagent.
1	This symbol identifies the system fluid bottle for wash 1 solution.
2	This symbol identifies the system fluid bottle for wash 2 solution.
Cl	This symbol identifies the system fluid bottle for cleaning solution.

Symbol	Description
H_2O	This symbol identifies the water bottle.
	This symbol identifies the waste bottle.

23 2163

Appendix H: References

1. Whitehead TP, Kricka J, Carter JN, Thorpe G. Analytical luminescence: its potential in the clinical laboratory. Clin Chem 1979; 25/9:1531–1546.
2. Woodhead JS, Campbell AK, McCapra F, Beheshti I, Weeks I. Acridinium esters as high specific-activity labels in immunoassays. Clin Chem 1983; 29/8: 1474–79.
3. Weeks I, Woodhead JS. Chemiluminescence immunoassays. J. Clin Immunoassay 1984; 7/1:82–89.
4. Patel A, Morton MS, Woodhead JS, Ryall MET, McCapra F, Campbell AK. A new chemiluminescent label for use in immunoassay. Biochem Soc Trans 1982; 10: 224–5.
5. Tietz NW. Fundamentals of clinical chemistry, 3rd ed. Philadelphia: W.B. Saunders Company; 1987. 1010 p. [now updated]
6. Kricka LJ. Chemiluminescence immunoassay. In The Immunoassay Handbook, 1st ed. New York: Stockton Press; 1994. pp. 341–343.
7. Dudley chap 10 in The Immunoassay Handbook. 1994. pp. 161–164.
8. Dudley R. Chemiluminescence Immunoassay: An Alternative to RIA. Lab Med 1990; 21/4; 216–221.
9. Chiron Diagnostics 1997. The ACS:180 System.
10. Kaplan LA, Pesce AJ. Clinical Chemistry: theory, analysis, and correlation, 2nd ed. St. Louis: CV Mosby Company; 1989. 1212 p.
11. National Committee for Clinical Laboratory Standards. Preparation and testing of reagent water in the clinical laboratory. 2nd ed. Villanova (PA): NCCLS; 1991 Aug. 37 p. (NCCLS Document C3–A2).
12. College of American Pathologists, Laboratory General Inspection Checklist, Section 1, Quality of water, p. 8. Northfield, IL. 1989.
13. Safety requirements for electrical equipment for measurement, control, and laboratory use. International Standard (IEC) 1010–1.
14. Smart JB. The Ciba Corning ACS:180—A user's perspective. J Clin Immunoassay 1992:15:246–251.
15. Boland J, Carey G, Krodel E, et al. The Ciba Corning ACS:180 benchtop immunoassay analyzer. Clin Chem 1990; 36:1598–1601.
16. Protection of laboratory workers from infectious disease transmitted by blood and tissue. Villanova, PA: NCCLS Publication M29 1991.

233 204

Glossary

acceptable CV	Highest acceptable percent coefficient of variation among the replicates of the calibrators, controls, or patient samples. The system flags results higher than this value.
acid probe	Mechanical component that injects acid reagent into a cuvette to resuspend the magnetic particles and prepare the ester for light emission.
acid reagent	Solution of 0.5% hydrogen peroxide and 0.1N nitric acid. Acid reagent is added to the magnetic particles in the cuvette after the wash cycle and reacts with the acridinium ester at a low pH. This prepares the ester for light emission.
acridinium ester (AE)	Chemical tag responsible for the flash when acid reagent is added to the acidified magnetic particle/analyte/AE mixture in the cuvette.
activate	Function used to enable an object for full use on the system.
active	Available for full use on the system. An enabled test or a reagent pack can be active.
ancillary reagent	Additional reagents required for an assay, such as Releasing Agent, DTT, or sample diluent. Ancillary reagents can reside in either the sample or reagent areas of system.
ancillary reagent probe	Component that aspirates ancillary reagents from the sample area and dispenses them into cuvettes.
antibody	• Protein (immunoglobulin molecule) produced by the body in response to the presence of an antigen. Antibodies are used as part of the body's resistance to disease. • Protein that can combine with a specific antigen. *Also called* Ab.
antigen	Substance that combines specifically with a corresponding antibody. *Also called* Ag.
archiving	Process that removes data from system memory and stores it on external media. The types of data that you can archive include QC data, patient results, Master Curve data, and calibration data.
aspirate probes	Mechanical devices that draw fluid from the cuvettes after magnetic separation occurs.

2/3 4 216

background Electronic signal of the photomultiplier tube (PMT) in the absence of light.

barcode Encoded information that is read by an optical scanner.

barcode scanner Optical device that scans and decodes barcoded information from the label on a reagent pack or vial, sample cup, or primary sample tube.

base probe Mechanical component that injects base reagent into a cuvette causing the chemiluminescent reaction.

base reagent Solution of <0.25N sodium hydroxide. Base reagent is added to the cuvette in the luminometer. The pH shift and accompanying electron excitation cause the chemiluminescent reaction.

batch Method of order entry which provides the convenience of specifying one or more tests on multiple samples.

baud rate Speed of data transmission in bit per seconds (bps) between the system and a remote device.

bidirectional interface Interface configuration allowing information to be transferred to and from another device.

calibration interval Number of days or hours that the calibration is valid for an assay.

calibrator Solution that contains a known concentration or a known reactivity of one or more analytes and that provides a reference for converting measured signals into concentrations. Calibrators are analyzed with reagents to obtain calibration data points. *See* calibration data.

calibrator card Card that contains the calibrator information for a specific lot of calibrators. The card contains the lot number, the expiration date, and the high and low calibrator values for each analyte contained in the calibrator. This information appears on the card in text and barcodes for you to enter into the system.

cancel Function used to ignore changes made at a screen or window.

carryover Contamination of a sample or reagent by the residue from the preceding sample or reagent.

central processing unit — Main printed circuit board of a computing system that interprets instructions and directs the system operations. *Also called* CPU.

character parity — Transmission setting used to check for transmission errors between the system and a remote device. This setting must be the same at the system and the remote device to maintain compatibility between the systems.

chart — QC statistics report that shows a Levey-Jennings chart of the data points and statistics collected during the most recent 45 days for a selected control and test.

check digit — Character printed at the end of a barcode that allows the barcode reader to verify the accuracy of its scanning and to verify accurate data transmission (Communications).

chemi-luminescence — Oxidation reaction of an organic chemical compound. The chemiluminescent reaction emits light.

competitive assay

- Antibody-antigen reaction in which the antigen of unknown concentration in a sample and a labeled antigen in an assay reagent compete for a limited amount of antibody in an assay reagent. The measurable signal produced by the Ab/labeled-Ag reaction is inversely proportional to the unknown concentration of Ag in the sample.
- Antibody-antigen reaction in which the antibody of unknown concentration in a sample and a labeled antibody in an assay reagent compete for a limited amount of antigen in an assay reagent. The measurable signal produced by the Ag/labeled-Ab reaction is inversely proportional to the unknown concentration of Ab in the sample.

control — *See* QC material.

CPU — *See* central processing unit.

cursor — Indicator that appears on the system screen to show you where to make an entry or a selection.

cutoff point — Medical decision point for a qualitative assay. Results above the cutoff point are reported with a different qualitative interpretation than those below the cutoff point.

V36 267

cuvette	Plastic, disposable container that holds the reaction mixture on the system. The chemiluminescent reaction occurs inside the cuvette.
CV	Percent coefficient of variation among the replicates for a sample.
cycle count	Each time a cuvette exits the luminometer, the cycle count increments by one.
dark count	Electronic background signal of the photomultiplier tube (PMT) in the absence of light.
data bits	Number of characters transmitted at one time between a system and a remote device.
Data link Protocol	Communication protocol used to transmit data between the system and a remote device.
default value	Value defined and preset by Chiron Diagnostics.
define	Establish a value for a variable or symbol, or to establish what the variable represents.
defined limits	Range of the data points defined by Chiron Diagnostics for a selected control and test.
delete	Function used to remove an object from the database.
demographics	Information about a patient or sample such as name, identification number, date of birth, sex, location, and physician or lot number and expiration date.
diluent	Solution used to dilute a sample.
dilution setpoint	Value that indicates the maximum concentration beyond which the system dilutes the sample and repeats the test.
disable	• Command or condition that does not allow a specific event to proceed. • Function used to remove a test from the menu.
diskette drive	Device that writes information to, and reads information from, a 3.5-inch diskette.
DOB	Patient's date of birth.

237 268

enable	• Command or condition that permits a specific event to proceed. • Function used to add a test to the menu.
equivocal	Interpretation of a qualitative assay for which a definitive result is not possible. Certain qualitative assays have equivocal zones which are established as a range on either side of the cutoff point. *Also called* indeterminate.
event log	List of system occurrences including errors, from the most recent to the oldest. This information includes the date and time of each occurrence.
exclude	Function used to remove a value from inclusion with other values.
flash	Short burst of light produced during the chemiluminescent reaction when acridinium ester is oxidized (when the pH rapidly changes from acidic to basic with the addition of base reagent).
forward sandwich (FS) protocol	Test protocol requiring two incubation cycles and two to four wash/aspiration cycles.
graphical user interface	Tool for communicating information to the user via graphics on the system screen. Graphics can include icons, scroll bars, and other graphical elements. *Also called* GUI.
hard disk drive	Device that stores data and contains all system programming. The system uses an X-megabyte hard disk drive.
histogram	Representation of the frequency distribution of patient results in the form of a bar chart.
ICMA	*See* immunochemiluminometric assay.
immunoassay	Chemical test that uses an antibody-antigen reaction to determine the presence of a specific analyte or to quantify a specific analyte. The analyte being measured may be an antibody or an antigen.
immunochemilu-m inometric assay	Type of sandwich assay in which the measurable signal produced by the reagent-labeled Ab/Ag reaction is proportional to the unknown concentration of antigen or antibody in a sample. *Also called* ICMA. *See also* sandwich assay.

v3 269

in process Status of a test when the sample is in the inprocess queue and has been detected by the system or the sample is in progress, but no sample has been dispensed yet.

in progress Status of a test when the sample is dispensed into a cuvette and is in the incubation chamber.

inactivate Function used to limit an object for use on the system.

inactive Not available for full use on the system. Only calibrators and controls can be scheduled for inactive tests and reagent packs.

include Function used to add a value for consideration with other values.

incubation ring Component that contains the ring and heatblocks.

indeterminate Interpretation of a qualitative assay for which a definitive result is not possible. Certain qualitative assays have indeterminate zones which are established as a range on either side of the cutoff point. *Also called* equivocal.

intercept Factor used with slope to correlate the assay results with another method. You obtain the intercept and the slope from a regression equation based on method comparison studies.

keyboard System component you use to type information or to respond to a system prompt.

label Substance coupled to an antigen or antibody, which provides the measurement signal for an immunoassay.

Laboratory Information System Laboratory computer system that can be interfaced to the system. *Also called* LIS.

Levey-Jennings charts Charts used to graphically display QC data points for evaluation against a required mean and standard deviation. *See also* chart.

light count Measured electronic signal of the photomultiplier tube (PMT) in the presence of light.

LIS *See* Laboratory Information System.

LIS Code Alphanumeric code that identifies a test, profile, or calibrator to your hospital or laboratory computer.

Lite Reagent	Assay reagent containing antibody or antigen labeled with acridinium ester in buffer.
lot-to-date QC data	QC mean, SD, number of points, and CV collected over the time the lot was in use on the system.
luminometer	Component of the system where the chemiluminescent reaction occurs and is measured.
Master Curve	Multiple-point curve that Chiron Diagnostics generates for each lot of Solid Phase and Lite Reagent for a particular test. The Master Curve is the reference curve used to convert a measured signal into sample concentration. Calibration data normalizes the system against stored Master Curve data for the tested analyte.
Master Curve card	Card that contains all the Master Curve information for a specific lot of assay reagents. The card contains the reagent lot numbers and expiration dates, number of curve points, and the RLUs and concentration for each curve point. This information appears on the card in text and barcodes for you to enter into the system.
minimum detectable volume	Smallest reagent or sample volume detectable by the system. *Also called* base volume.
n	Total number of observations. Used in calculating the mean.
nonspecific binding	All acridinium ester present during the measurement phase that does not represent specific antibody binding. A small percentage of acridinium ester attaches indiscriminately to the cuvette wall or to particles and does not wash away. The result is a signal that mimics the antibody-antigen reaction.
normal range	*See* reference range.
numeric keys	Keys found on the right side of the keyboard labeled with numbers and mathematical symbols.
observed limits	Range of the data points collected during the most recent 45 days for the selected control and test.
off-system test	Test that is not run on the system but whose results are entered in the result database and printed on a patient report. Off-system test results can also be used in ratio test definitions.

one-step protocol Test protocol that includes a 20 minute incubation and 1, 2, or 3 wash aspirate cycles.

Used to detect antibody.

optimize placement Function that indicates where to place reagent packs so that reagent probes can operate efficiently.

orderable test definition (user) Set of parameters that users define for each test such as test name, reference range, check range, and number of replicates.

pack ID Identification code contained in the barcode on a reagent pack that the system recognizes as unique to that pack.

paramagnetic particles Magnetic particles used in the Solid Phase. *Also called* PMP.

PBS *See* phosphate buffered saline.

pending samples Samples for which tests are scheduled but not yet complete.

pending tests Tests still to be performed by the system.

phosphate buffered saline Saline solution that is pH buffered. Phosphate buffered saline is used for washing and resuspending solid phase particles.

photomultiplier tube Sensitive photodetector that captures individual photons of light. The photodetector consists of a vacuum-filled photo tube with a cathode (usually nine diodes) and an anode that the system uses to generate a signal (pulse) during the measurement phase. The signal is directly proportional to the amount of illumination produced by the reaction and can be converted into sample concentration. *Also called* PMT.

photon Unit of light; quantum of radiant energy.

PID Patient identification code. A unique code that identifies the patient from which the sample was obtained.

PMP *See* paramagnetic particles.

PMT *See* photomultiplier tube.

pointing device Apparatus used to interact with system software through the user interface, such as a mouse or a trackball.

power supply Electronic subsystem that converts the AC voltages in the power line to the DC voltages used inside the system.

power-on time Cumulative time the system power has been on since its first use.

predilution Dilution option that allows the operator to load a diluted sample and specify the dilution factor.
The system corrects the assay value for the dilution factor.

primary sample tube Tube used to collect patient blood samples by venipuncture.

profile Group of related tests or a group of the same test with different dilution specifications.

prompt Questions, instructions, or commands that help you complete the current task.

query timeout Maximum number of minutes required for a remote device to respond to a query from the system.

rack Device used to present sample tubes to the system. The rack contains space for up to five sample tubes.

Rack ID Positional identification code. The unique code that identifies each sample rack and the positional location of the sample in the rack. *Called* Rack *on the user interface*

random access Mode of operation in which the system processes samples for multiple assays in the most efficient order.

ratio definition Formula the system uses to calculate the results of a ratio test.

ratio test Test results calculated from the results of other tests. FTI is an example of a ratio test.

raw data Total photon count that the system receives for a flash. The raw data is not corrected.

reagent pack Triple-chamber container for the Solid Phase, Lite Reagent, and if required, ancillary reagent. Reagent packs are loaded onto a rocker in the reagent area of the system so that the solid phase remains in suspension.

reagent probe 1, 2, or 3 Three independent components that aspirate assay reagents and ancillary reagents from the reagent area and dispense them into cuvettes.

reference range Range of values for each assay from a defined population. Each laboratory should establish its own reference ranges for the diagnostic evaluation of patient results. The normal range is a reference range for the healthy population and can be defined by sex, age, or other patient attributes. Reference ranges can also exist for various pathological states. For example, there may be reference ranges for hypothyroid, euthyroid, and hyperthyroid states.

Chiron Diagnostics provides expected results in the product insert for each assay.

relative light unit Counts generated when the PMT detects light during the chemiluminescent reaction. A relative light unit is calibrated against a tritium source and is unique to its measurement. *Also called* RLU.

releasing agent Solution that is mixed with a sample to separate the agent analyte from the binding proteins, making the analyte available for the reaction.
Also called REL.

remark Warning or caution message about the status of a result. The remark appears next to the result on the screen and on printed reports.

remote device ID Alphanumeric code that identifies the remote device connected to a system port.

replicate Number of times that a sample is assayed for a particular test. The system calculates the mean value from the results of the replicates of the calibrator, control, or patient sample.

RLU *See* relative light units.

Running System state indicating that there are samples in the inprocess queue, tests in the track, or that the cleaning procedure is in process.

sample cup Disposable container that holds samples, controls, or calibrators.

sample probe Component that aspirates a sample and dispenses it into a cuvette in the track.

293 294

sandwich assay

- Antibody-antigen reaction in which the antigen of unknown concentration in a sample is sandwiched between antibody bound to solid phase and antibody labeled with acridinium ester. The measurable signal produced by the reaction is directly proportional to the concentration of Ag in the sample.
- Antibody-antigen reaction in which the antibody of unknown concentration in a sample is sandwiched between antigen bound to solid phase and antigen labeled with acridinium ester. The measurable signal produced by the reaction is directly proportional to the concentration of Ab in the sample.

save

Function used to add an object to the database or to include updates to an object in the database.

SD

Standard deviation. The positive square root of the variance. A measure of scatter used to determine quality control ranges.

search

Function used to locate an item in a list.

SI units

International system for units of measure.

SID

Sample identification code. A unique code that identifies each sample.

sign in

Enter a password or code to access the system or an area of the system.

sign out

Indicate that you are finished working in the system or an area of the system.

slope

Factor used along with intercept to correlate the assay results with results from another method. You obtain the slope and the intercept from a regression equation based on method comparison studies.

solid phase

An assay reagent consisting of paramagnetic particles covalently bound to antigen or antibody suspended in a buffer.

sort

Function used to change the order of items in a list. For example, the worklist can be sorted by patient name or by SID.

spline curve

Method of data reduction that uses third-degree polynomials to connect each two data points in turn. The polynomials are adjusted to give a smooth curve.

startup The events that occur when the system uses the software to initialize the hardware.

status Information about the current operating condition of the system.

stop bits Number of data bits that maintain synchronization between the system and a remote device during data transmission.

subsystem failure Message classification category meaning:

a. subsystem broken; may be user recoverable and concurrent with system warning state *a*.

b. subsystem off-line until user interaction and concurrent with system warning state *b*.

Message color: red.

subsystem warning Message classification category meaning: subsystem will go off-line if user does not interact. Migrates to subsystem failure state *b*. Message color: yellow.

system failure Message classification category meaning: broken subsystem; system is not capable of processing anything more; may be user recoverable. Message color: red

system warning Message classification category meaning:

a. broken subsystem; still processing some tests, but migrates to system failure when finished.

b. subsystem off-line; system may or may not be still processing some tests.

Message color: yellow.

system clock Twenty-four-hour clock that the system uses to monitor various system functions, such as calibration intervals, and to track the time of events.

update Function used to overwrite information with new information. For example, when a new master test definition is issued, you update the master test definition for access to the latest version.

view Function used to limit the items that appear in a list. For example, you can view all the samples in the worklist or just samples with requests.

waive Function that allows you to use an expired calibration.

waste bottle	Container on the system that is the main receptacle for waste.
water bottle	Container on the system that holds the main supply of reagent water.
Westgard rules	QC evaluation rules used to detect systematic or random errors.
window	Screen display area that you can independently move or manipulate. These areas can overlap each other on the screen.
worklist	Information about requested tests and patient demographics.

96 271

ACS Centaur

Summary of Safety and Effectiveness

As required by 21 CFR 807.92, the following 510(k) Summary is provided:

1. **Submitters Information**

Contact person: William J. Pignato
Director of Regulatory Affairs

Address: Chiron Diagnostics Corporation
63 North Street
Medfield, MA 02052

Phone: 508 359-3825

Date Summary Prepared: April 14, 1997

2. **Device Information**

Proprietary Name: ACS:Centaur Analyzer
Common Name: Automated Immunoassay Analyzer
Classification Name: Photometric Analyzer for Clinical Use
Classification Number: 21 CFR 862.2160, Class I

3. **Predicate Device Information**

Name: ACS:180® Analyzer
Manufacturer: Chiron Diagnostics Corporation (formally Ciba Corning Diagnostics Corp.)
510(k) Number: D.C. #K902336.

4. **Device Description**

The ACS:Centaur system is a stand-alone, continuous operation, immunochemistry analyzer. The system performs the following functions.

- aspirates and dispenses samples
- performs dilutions
- adds reagents
- incubates reaction vessels
- separates solid and liquid waste
- measures photon emissions
- performs data reduction
- collects and maintains patient demographics and results

5. Statement of Intended Use

The intended use of the ACS:Centaur system is an automated immunoassay analyzer designed to perform in vitro diagnostic immunochemical assays analysis on clinical specimens using the ACS ilmmunoassays. The system menu will include endocrine, anemia, reproductive, cardiac, therapeutic drug, and infectious disease assays. All assays are based on chemiluminescent technology.

6. Summary of Technological Characteristics

ACS assays are dedicated for use on the ACS:180® and the ACS:Centaur utilizes acridinium ester as label and paramagnetic particles as the solid phase. Like the ACS:180®, the ACS:Centaur measures the amount of light emitted during the chemiluminescent reaction. There is direct relationship between the amount of light emitted and amount of antigen in the patient sample. The system will measure both competitive binding assays and sandwich assays.

The ACS:Centaur system uses a Master Curve and a two-point, user-initiated calibration to calibrate all the ACS assays. The Master Curve and the two-point calibration system eliminate the need to measure a full standard curve with each assay or to run calibrators each time the assay is run. The system stores the calibration for the interval specified in the assay product inserts.

Other Technological Features include:

- Photomultiplier used in the photon counting mode
- Automated pipetting of sample and reagents
- Electronic Fluid Sensing on sample and reagents
- Clog detection for samples
- Random access and batch test processing
- Varied test incubations
- Human Interface features including barcode reading, LIS, automated data reduction.
- Automated dilution capabilities

Comparison of
ACS:Centaur features to ACS:180 Plus features

Feature	ACS:180 Plus	ACS Next Generation
Principles of Operation	• Chemiluminescence using magnetic-particle solid phase and chemiluminescent label	• same
Optical System	• PMT used in photon counting mode	• same
Temp control	• Reactions are controlled at 37°C	• *Reactions* • Reactions controlled at 37°C • *Reagent Storage* • Reagents stored at 4 to 8°C

Dispense System	• Automated pipetting of samples and reagents
	• Precision syringes (sample and reagent)
	• Electrical fluid sensing on sample and reagent probes
	• Clog detection mechanism to alert operator to clogged sample probe
		• *Sample Probe - same*, except:
		  • Air pressure fluid sensing
		  • Air pressure disposable tip sensing
		  • Clog detection
		• *Reagent Probes - same*, except
		  • No level sense; probe sent to bottom of container
		  • Fluid monitoring during aspiration

Reagent and Sample Handling	• Sample carousel with 34 outer positions and 26 inner positions • Reagent carousel with 26 positions (13 pairs in usual configuration) • Sample tray inserts for other size sample tubes	• *Samples*: 5 tube racks hold sample tubes • Sample Input, In-Process and Output Queue holds up to 180 samples; Tube size selected on sample tube rack • *Assay Reagents:* Reagent Tray with 30 positions; Refrigeration; Reagent Pack contains both Solid Phase and Tracer Reagent in separate wells • *Ancillary Reagents:* Reagent Compartment with 15 positions; Refrigeration
Test Processing	• Random Access and Batch	• *same*, except: • sample scheduling optimized for throughput; Continuous Operation
Assay Protocols	• 8 minute incubation, single step	• 8 minute incubation, single step • 18 minute incubation, single step • 8 - 18 minute incubation, two step • 18 - 18 minute incubation, two step

Human Interface data output	• 9" CRT
	• External printers
	• Serial bi-directional LIS Interface
	• Audible (adjustable) beeper
	• Computer LIS Interface
		• *same*, except:
		  • 17" Color Monitor with Graphical User Interface
		  • External Modem for Remote Diagnostics Interface

Human Interface data input	• 101 key keyboard • Hand-held barcode reader • Stationary barcode scanners for id of patient samples and reagents • Computer LIS Interface	• *same*
Human Interface data analysis	• Automated data reduction • Assay-specific data reduction	• *same*
QC Software	• Stored control results • L-J plotting • Statistical enhancements • Compatibility with CCD QC Reporting	• *same*
Specimens	• Serum or plasma, sample cups or primary tubes may be used • Dilutions allowed on a per-assay basis • Capability of Dilution of Samples Requiring Pretreatment	• *same*

245 280

Disposables	• Sample cups
	• Reaction cuvettes
	• Cuvette loading and unloading allowed during run
	• Reagent 1 & 2 status tracked and displayed
		• *same*, except:
		  • Additional wash solutions (status tracked and displayed)
		  • Sample Pipette Tips
		  • All disposables may be loaded during operation
		  • All waste may be unloaded during operation

Reagents	• Solid Phase • Chemiluminescent label (Acridinium Ester) • Reagent volume reporting • Reagent inventory tracks bottle usage	• *same*, except: • Ancillary Reagents with inventory tracking and volume reporting
Calibrators	• 6 to 10 point stored calibration for each reagent • 2 point user run calibration • Calibrators checked with barcode • Calibrator lot numbers stored and displayed	• *same*
Controls	• Low, mid, and high constituent controls • Capability to dilute controls	• *same*
Physical	• Bench Model; 23Hx23Dx58L • 250lbs • <1200watts • Ambient temp 18-30C	• Floor Model; 60Hx42Dx58L • 1200 lbs. • <2000 watts • ambient temp 18-30C
Laboratory Automation	• Software controlled signals for interface to a robot for transfer of samples to and from a sample transport system	• *same*, except: • Software signals for direct sampling from the sample transport system
Other User Interface Features	• Stat interrupt capability • Improved cleaning with Extended Operation Module • Improved User Interface for scheduling batch runs, report options, easy-to-use maintenance • Complete reporting of system status and logging of system events • Tracking on-board reagent usage • Support for foreign languages • Barcode extended to 128, 2 of 5 • On-Line Information System • System test extended to include slope and offset, dilution and overrange condition •	• *same*

Other Performance Features	• Throughput: 180 tests/hr
	• Time to First Result: 15 min.
	• On-board supplies
	• Cuvettes for 200 assays
	• Water for 200 assays
	• Solid and liquid waste container
		• *same*, except:
		  • Throughput: 120 to 240 tests/hr
		  • Time to First Result: 15 min., 30 min., 60 min. depending upon assay protocol
		  • On-board supplies for 1000 tests

Chiron Diagnostics ACS:Centaur
Software Development Process

(b)(4) Software Development Process

[redacted]

257

(b)(4) Software Development Process

[redacted]

252

282

(b)(4) Software Development Process

[redacted]

2-13 284

ACS: Centaur

Labeling for System Fluids

7.75 x 2 inches

Acid Reagent
For In Vitro Diagnostic Use
For use with the ACS:Centaur System.
1500 ml/5000 Tests
0.5% H_2O_2
0.1 N HNO_3

Manufactured by:
Chiron Diagnostics Corporation
East Walpole, MA 02032 USA
Chiron Diagnostics Ltd
Halstead, Essex, CO9 2QY, U.K.

Säure Reagenz
In Vitro Diagnosticum
Zur Anwendung mit dem ACS:Centaur System.
1500 ml/5000 Tests
0,5% H_2O_2
0,1 N HNO_3

Chiron Diagnostics GmbH
D-35453 Lemwerder, Germany

Réactif Acide
Pour utilisation diagnostique in vitro
Pour utilisation sur le système ACS:Centaur.
1500 ml/5000 Tests
H_2O_2 0,5% et HNO_3 0,1 N

Chiron Diagnostics S.A.
Cergy Pontoise, France

Acid Reagente
Per uso diagnostico in Vitro
Da utilizzare con il sistema ACS:Centaur.
1500 ml/5000 Tests
0,5% H_2O_2
0,1 N HNO_3

Chiron Diagnostics S.p.A.
Cassina de' Pecchi (MI), Italy

Acid Reactivo
Para Uso Diagnóstico In Vitro
Para usarse con el sistema ACS:Centaur.
1500 ml/5000 Pruebas
0,5% H_2O_2
0,1 N HNO_3

酸化剤
体外診断用医薬品
1500mL/5000テスト用
成分：0.5%過酸化水素、0.1mol/L硝酸
貯法：4～25℃

製造元：Chiron Diagnostics Corporation
輸入元：カイロン株式会社
：Chiron KK
東京都渋谷区恵比寿 1-19-15
Tokyo 150, Japan

CHIRON | DIAGNOSTICS

108260 Rev. A

ACS:Centaur

Acid Reagent

4–25°C

Cat./Art-Nr./Réf./カタログ
672177

Lot/Ch.-B:

Exp./Verw.-Kz.:

Date Installed/Losüberg eingesetzt am/Mise en place le/Data d'installazione/Fecha de instalación/XXXX

Artwork No., 108287, Rev. A

Base Reagent
For In Vitro Diagnostic Use
For use with the ACS:Centaur System.
1500 ml/5000 Tests
<0,25 N NaOH and surfactant

Manufactured by:
Chiron Diagnostics Corporation
East Walpole, MA 02032 USA
Chiron Diagnostics Ltd.
Halstead, Essex, CO9 2DX U.K.

Base Reagenz
In Vitro Diagnosticum
Zur Anwendung mit dem ACS:Centaur System.
1500 ml/5000 Tests
<0,25 N NaOH mit Detergenz

Chiron Diagnostics GmbH
D-35433 Fernwald, Germany

Réactif Base
Pour utilisation diagnostique in vitro
Pour utilisation sur le système ACS:Centaur.
1500 ml/5000 Tests
NaOH <0,25 N et surfactant

Chiron Diagnostics S.A.
Cergy Pontoise, France

Base Reagente
Per uso diagnostico In Vitro
Da utilizzare con il sistema ACS:Centaur.
1500 ml/5000 Tests
NaOH <0,25 N a tensioattivo

Chiron Diagnostics S.p.A.
Cambria de' Pezzoli (NU), Italy

Base Reactivo
Para Uso Diagnóstico In Vitro
Para usarse con el sistema ACS:Centaur.
1500 ml/
5000 Pruebas
<0,25 N NaOH
y surfactante

酸化剤助剤
体外診断用医薬品
1500mL/5000テスト用
成分：0.25mol/L水酸化ナトリウム
容量：4～25℃

製造元：Chiron Diagnostics Corporation
輸入元：カイロン株式会社
：Chiron KK
東京都渋谷区恵比寿 1-19-15
Tokyo 150, Japan

CHIRON | DIAGNOSTICS

108283 Rev. A

ACS:Centaur

Base Reagent

4–25°C

Cat./Art. Nr./Réf./ カタログ
672177

Lot/Ch.-B:

Date Installed/Losung eingesetzt am/
Mise en place le/Data d'installazione/
Fecha de instalación/XXXX

Exp./New. bis

3/4" x 2"

Sodium hydroxide
Irritating to eyes and skin. Wear suitable gloves and eyeface protection. In case of contact with eyes, rinse immediately with plenty of water and seek medical advice. In case of accident or if you feel unwell, seek medical advice immediately (show the label where possible).

Natriumhydroxid
Reizt die Augen und die Haut. Bei der Arbeit geeignete Schutzhandschuhe und Schutzbrille/Gesichtsschutz tragen. Bei Berührung mit den Augen sofort mit Wasser abspülen und einen Arzt konsultieren. Bei Unfall oder Unwohlsein sofort einen Arzt zuziehen (wenn möglich, dieses Etikett vorzeigen).

Hydroxyde de sodium
Irritant pour les yeux et la peau. Porter des gants appropriés et un appareil des yeux/du visage. En cas de contact avec les yeux, laver immédiatement et abondamment avec de l'eau et consulter un spécialiste. En cas d'accident ou de malaise, consulter immédiatement un médecin (lui montrer l'étiquette si possible).

Idrossido di sodio
Irritante per gli occhi e la pelle. Usare guanti adatti e proteggersi gli occhi/la faccia. In caso di contatto con gli occhi, lavare immediatamente e abbondantemente con acqua e consultare un medico. In caso di incidente o di malessere consultare immediatamente il medico (se possibile, mostrargli l'etichetta).

Hidróxido de sodio
Irrita los ojos y la piel. Úsense guantes adecuados y protección para los ojos/la cara. En caso de contacto con los ojos, lávense inmediata y abundantemente con agua y acúdase a un médico. En caso de accidente o malestar, acúdase inmediatamente al médico (si es posible, muéstrese la etiqueta).

水酸化ナトリウム
眼や皮膚への刺激性があります。適当な手袋、また眼、顔面の保護具を着用して下さい。眼に入った場合は大量の水で充分に洗い流す等の応急処置を行い、医師の手当等を受けて下さい。事故あるいは体の不調を感じた場合は、医師の手当等を受けて下さい。（その際にはラベルを示して下さい。）

108290 Rev. A

5.5 x 2 inches

Artwork No., 108291, Rev. A

Acid + Base Reagents

Irritant
Reagent
Irritante
刺激性あり

Chemical ingredient: Sodium hydroxide
Irritating to eyes and skin. Wear suitable gloves and eyes/face protection. In case of contact with eyes, rinse immediately with plenty of water and seek medical advice. In case of accident or if you feel unwell, seek medical advice immediately (show the label where possible).

Chemische Inhaltsstoffe: Natriumhydroxid
Reizt die Augen und die Haut. Bei der Arbeit geeignete Schutzhandschuhe und Schutzbrille/Gesichtsschutz tragen. Bei Berührung mit den Augen sofort mit Wasser abspülen und Arzt konsultieren. Bei Unfall oder Unwohlsein sofort Arzt zuziehen (wenn möglich, dieses Etikett vorzeigen).

Paramètre de sécurité: Hydroxyde de sodium
Irritant pour les yeux et la peau. Porter des gants appropriés et un appareil de protection des yeux/du visage. En cas de contact avec les yeux, laver immédiatement et abondamment avec l'eau et consulter un spécialiste. En cas d'accident ou de malaise, consulter immédiatement un médecin (si possible, montrer l'étiquette).

Componente chimico: Idrossido di sodio
Irritante per gli occhi e la pelle. Usare guanti adatti e protezioni per gli occhi/la faccia. In caso di contatto con gli occhi, lavare immediatamente e abbondantemente con acqua e consultare un medico. In caso di incidente o di malessere consultare immediatamente il medico (se possibile, mostrargli l'etichetta).

Componente chimico: Hidróxido de sodio
Irrita los ojos y la piel. Utilizar guantes adecuados y protección para los ojos/la cara. En caso de contacto con los ojos, lávese inmediata y abundantemente con agua y acúdase a un médico. En caso de accidente o malestar, acudir inmediatamente al médico (si es posible, muéstrele la etiqueta).

XXXXXXXXXXX XXXXX
XXXXXXXXXXX XXXXXXXXXXXXXXXXX XXXXXX XXXX XXXXXXXXX
XXXXXXXXX XXXX XXXXXXXX XXXXXXXXXXXXXX XXXXXXX XXXXXXXX XX
XXXXXXXXXXXXXXXXX XXXX XXXXXXX XXXXXXXX

Manufactured by
Chiron Diagnostics Corporation
East Walpole, MA 02032 USA

Chiron Healthcare Pty Ltd
Somersby, 2128, Australia

Chiron Diagnostics S.A.
Cergy Pontoise, France

Chiron Diagnostics GmbH
D-35463 Lemgo/Lahn, Germany

Chiron Ltd.
Hong Kong

Chiron Diagnostics S.p.A.
Cassina de' Pecchi (MI), Italy

Chiron K.K.
カイロン株式会社
東京都渋谷区恵比寿 1-19-15
Tokyo 150, Japan

Chiron, S.A. de C.V.
Xochimilco, Mexico D.F., C.P. 16010, México

Chiron Diagnostics Ltd.
Halstead, Essex, CO9 2DX, U.K.

XXXXXXXXXXXX

Reagents
For In Vitro Diagnostic Use
For use with the ACS:Centaur system.
Store at 18–25°C
Acid: 1500 mL/5000 tests, 0.5% H_2O_2, 0.1 N HNO_3
Base: 1500 mL/5000 tests, <0.25 N NaOH and surfactant

Reagenz
In Vitro Diagnosticum
Zur Anwendung mit dem ACS:Centaur Systemen.
Lagern bei 18–25°C
Acid: 1500 mL/5000 Tests, 0,5% H_2O_2, 0,1 N HNO_3
Base: 1500 mL/5000 Tests, <0,25 N NaOH mit Detergenz

Réactif
Pour utilisation diagnostique in vitro
Pour utilisation avec le système ACS:Centaur.
Conserver à 18–25°C
Acid: 1500 mL/5000 tubes, H_2O_2 0,5%, HNO_3 0,1 N
Base: 1500 mL/5000 tubes, <0,25 NaOH et surfactant

Reagente
Solo per uso diagnostico In Vitro
Da utilizzare su ACS:Centaur system.
Conservare a 18-25°C
Acid: 1500 mL/5000 test, 0,5% H_2O_2, 0,1 N HNO_3
Base: 1500 mL/5000 test, NaOH <0,25 N e tensioattivo

Reactivo
Para Uso de Diagnóstico en Vitro
Para usarse con el ACS:Centaur system.
Almacenar a temperatura de 18–25°C
Acid: 5000 Determinaciones/1500 mL, 0.5% H_2O_2, 0.1 N HNO_3
Base: 5000 Determinaciones/1500 mL, <0.25 N NaOH y surfactante

XXXX XXXXX
XXXXXXXXXXXXXXX
XXXX
XXXXXXXXXX
XXXXXXXXXXXXX
XXXXXXXXXXX
XXXXXXXXXXXXXXX
XXXXXXXXXX
XXXXXXXXXXX

CHIRON | DIAGNOSTICS

9 x 4.25 inches

18–25°C

Acid + Base Reagents

Cat./Art Nr.:
112219

Avoid exposure to light. Store in the box.
Vor Licht suhützen. Ju der Verpackung aufbewahren.
Eviter l'exposition à la lumière. Conserver dans la boîte.
Evite exponer a la luz. Almacenar en la caja.
Non exporre alla luce. Conservare nella scatola.
XXXXXXXXXXXXXXXXXXXXXXXXXXX XXX

Kit/Trousse/
Juego/XXXXXX

Lot/Ch.-B:
3334455

Exp./Verw. bis:
30SEPT96

	Lot/Ch.-B
Acid/Xxxx/XXX	3334455
Base/Xxxx/XXX	4446677

5 x 4.25 inches

7 96 BAD

1269

510(k) Number (if known): _____

Device Name: **Chiron Diagnostics ACS:Centaur System**

Indications for Use:

The intended use of the ACS:Centaur system is an automated immunoassay analyzer designed to perform in vitro diagnostic immunochemical assays analysis on clinical specimens using the ACS ilmmunoassays. The system menu will include endocrine, anemia, reproductive, cardiac, therapeutic drug, and infectious disease assays. All assays are based on chemiluminescent technology.proteins and is an indirect indicator of thyroid status.4

(Division Sign-Off)
Division of Clinical Laboratory Devices
510(k) Number K974118

(PLEASE DO NOT WRITE BELOW THIS LINE--CONTINUE ON ANOTHER PAGE, IF NEEDED)

Concurrence of CDRH, Office of Device Evaluation (ODE)

Prescription Use ✓
(Per 21 CFR 801.109)

OR

Over-The-Counter Use _____
(Optional Format 1-2-96)

K971418

Bayer

Business Group Diagnostics

Bayer Corporation
63 North Street
Medfield, MA 02052-1688
Phone: 508 359-7711
Fax: 508 359-3599

REDACTED BY MFR

May 4, 2000

Freedom of Information Staff, HFZ-82
Center for Devices and Radiological Health, FDA
2094 Gaither Road
Rockville, MD 20850

RE: **F97-31144**
Chiron Diagnostics ACS: Centaur Analyzer K971418
Redacted Information

Dear Sir or Madam:

Enclosed is the redacted copy of the above referenced information. In the enclosed copy, pages 9-22, 28, 251-253, have been redacted. If you require additional information, please contact me.

Sincerely,

William Pignato

William J. Pignato, Director
Regulatory Affairs
Ph. 508-359-3825
Fax 508-359-3356
William.Pignato.b@Bayer.com

1

VEJ

H:\wp\requal\redact

DEPARTMENT OF HEALTH & HUMAN SERVICES

Public Health Service

Food and Drug Administration
2098 Gaither Road
Rockville MD 20850

JUL 17 1997

Thomas F. Flynn
Manager, Regulatory Affairs & Compliance
Chiron Diagnostics Corporation
63 North Street
Medfield, Massachusetts 02052-1688

Re: K971418
ACS Centaur Analyzer
Regulatory Class: I
Product Code: JJE
Dated: June 26, 1997
Received: June 27, 1997

Dear Mr. Flynn:

We have reviewed your Section 510(k) notification of intent to market the device referenced above and we have determined the device is substantially equivalent (for the indications for use stated in the enclosure) to devices marketed in interstate commerce prior to May 28, 1976, the enactment date of the Medical Device Amendments or to devices that have been reclassified in accordance with the provisions of the Federal Food, Drug, and Cosmetic Act (Act). You may, therefore, market the device, subject to the general controls provisions of the Act. The general controls provisions of the Act include requirements for annual registration, listing of devices, good manufacturing practice, labeling, and prohibitions against misbranding and adulteration.

If your device is classified (see above) into either class II (Special Controls) or class III (Premarket Approval), it may be subject to such additional controls. Existing major regulations affecting your device can be found in the Code of Federal Regulations, Title 21, Parts 800 to 895. A substantially equivalent determination assumes compliance with the current Good Manufacturing Practice requirement, as set forth in the Quality System Regulation (QS) for Medical Devices: General regulation (21 CFR Part 820) and that, through periodic (QS) inspections, the Food and Drug Administration (FDA) will verify such assumptions. Failure to comply with the GMP regulation may result in regulatory action. In addition, FDA may publish further announcements concerning your device in the Federal Register. Please note: this response to your premarket notification submission does not affect any obligation you might have under sections 531 through 542 of the Act for devices under the Electronic Product Radiation Control provisions, or other Federal Laws or Regulations.

2

Under the Clinical Laboratory Improvement Amendments of 1988 (CLIA-88), this device may require a CLIA complexity categorization. To determine if it does, you should contact the Centers for Disease Control and Prevention (CDC) at (770) 488-7655.

This letter will allow you to begin marketing your device as described in your 510(k) premarket notification. The FDA finding of substantial equivalence of your device to a legally marketed predicate device results in a classification for your device and thus, permits your device to proceed to the market.

If you desire specific advice for your device on our labeling regulation (21 CFR Part 801 and additionally 809.10 for in vitro diagnostic devices), please contact the Office of Compliance at (301) 594-4588. Additionally, for questions on the promotion and advertising of your device, please contact the Office of Compliance at (301) 594-4639. Also, please note the regulation entitled, "Misbranding by reference to premarket notification" (21 CFR 807.97). Other general information on your responsibilities under the Act may be obtained from the Division of Small Manufacturers Assistance at its toll-free number (800) 638-2041 or (301) 443-6597 or at its internet address "http://www.fda.gov/cdrh/dsmamain.html".

Sincerely yours,

Steven Gutman

Steven I. Gutman, M.D., M.B.A.
Director
Division of Clinical
Laboratory Devices
Office of Device Evaluation
Center for Devices and
Radiological Health

Enclosure

5. **Statement of Intended Use**

The intended use of the ACS:Centaur system is an automated immunoassay analyzer designed to perform in vitro diagnostic immunochemical assays analysis on clinical specimens using the ACS ilmmunoassays. The system menu will include endocrine, anemia, reproductive, cardiac, therapeutic drug, and infectious disease assays. All assays are based on chemiluminescent technology.

6. **Summary of Technological Characteristics**

ACS assays are dedicated for use on the ACS:180® and the ACS:Centaur utilizes acridinium ester as label and paramagnetic particles as the solid phase. Like the ACS:180®, the ACS:Centaur measures the amount of light emitted during the chemiluminescent reaction. There is direct relationship between the amount of light emitted and amount of antigen in the patient sample. The system will measure both competitive binding assays and sandwich assays.

The ACS:Centaur system uses a Master Curve and a two-point, user-initiated calibration to calibrate all the ACS assays. The Master Curve and the two-point calibration system eliminate the need to measure a full standard curve with each assay or to run calibrators each time the assay is run. The system stores the calibration for the interval specified in the assay product inserts.

Other Technological Features include:

- Photomultiplier used in the photon counting mode
- Automated pipetting of sample and reagents
- Electronic Fluid Sensing on sample and reagents
- Clog detection for samples
- Random access and batch test processing
- Varied test incubations
- Human Interface features including barcode reading, LIS, automated data reduction.
- Automated dilution capabilities

4

DEPARTMENT OF HEALTH & HUMAN SERVICES

Public Health Service
Food And Drug Administration

Memorandum

Date July 14, 1997

From: Reviewer(s) - Name(s) **JAMES V. CALLAGHAN**

Subject: 510(k) Number **K971418**

To: The Record - It is my recommendation that the subject 510(k) Notification:

- ☐ Refuse to accept.
- ☐ Requires additional information (other than refuse to accept).
- ☒ Accepted for review **April 22, 1997**
- ☒ Is substantially equivalent to marketed devices.
- ☐ NOT substantially equivalent to marketed devices.
- ☐ Other (e.g., exempt by regulation, not a device, duplicate, etc.)

Is this device subject to Postmarket Surveillance?	☐ YES	☒ NO
Is this device subject to the Tracking Regulation?	☐ YES	☒ NO
Was clinical data necessary to support the review of this 510(k)?	☐ YES	☒ NO
Is this a prescription device?	☐ YES	☒ NO
Was this 510(k) reviewed by a Third Party?	☐ YES	☒ NO

This 510(k) contains:

Truthful and Accurate Statement ☐ Requested ☒ Enclosed
(required for originals received 3-14-95 and after)

☒ A.510(k) summary OR ☐ A 510(k) statement

☐ The required certification and summary for class III devices

☒ The indication for use form (required for originals received 1-1-96 and after)

The submitter requests under 21 CFR 807.95 (doesn't apply for SEs):

☐ No Confidentiality ☒ Confidentiality for 90 days ☐ Continued Confidentiality exceeding 90 days

Predicate Product Code with panel and class:

JJE/75/I

Additional Product Code(s) w panel (optional)

REVIEW: CLCB 7-15-97
(Branch Chief) (Branch Code) (Date)

FINAL REVIEW: 7/16/97
(Division Director) (Date)

Rec'd. 7/16

5

Revised:11-20-96

510(k) "SUBSTANTIAL EQUIVALENCE" DECISION-MAKING PROCESS (DETAILED)

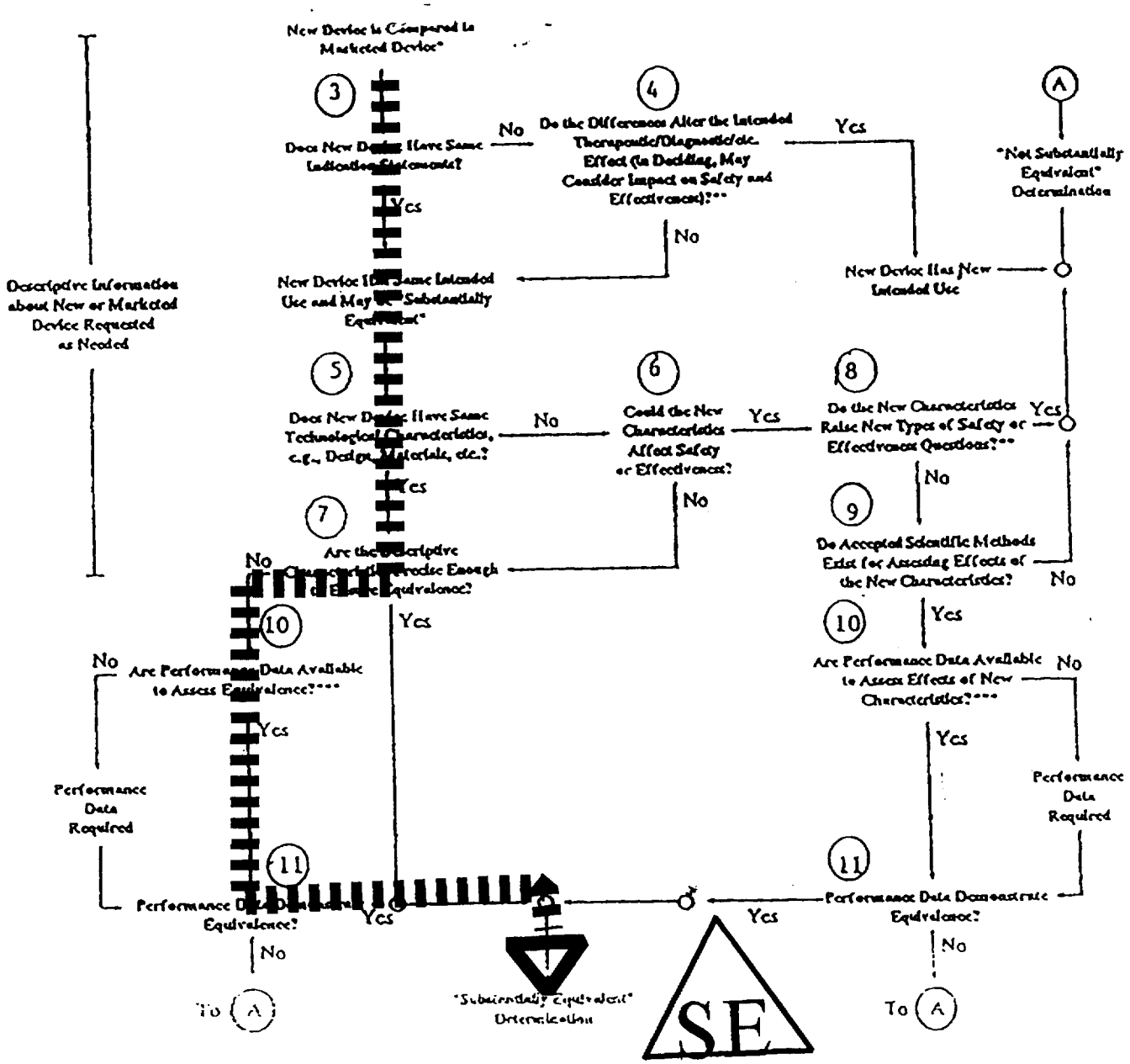

* 510(k) submissions compare new devices to marketed devices. FDA requests additional information if the relationship between marketed and "predicate" (pre-Amendments or reclassified post-Amendments) devices is unclear.

** This decision is normally based on descriptive information alone, but limited testing information is sometimes required.

*** Data may be in the 510(k), other 510(k)s, the Center's classification files, or the literature.

REVISED:3/14/95

THE 510(K) DOCUMENTATION FORMS ARE AVAILABLE ON THE LAN UNDER 510(K) BOILERPLATES TITLED "DOCUMENTATION" AND MUST BE FILLED OUT WITH EVERY FINAL DECISION (SE, NSE, NOT A DEVICE, ETC.).

"SUBSTANTIAL EQUIVALENCE" (SE) DECISION MAKING DOCUMENTATION

K971418

Reviewer: JAMES V. CALLAGHAN

Division/Branch: DCLD/CLCB

Device Name: CHIRON DIAGNOSTICS AUTOMATED CHEMILUMINESCENCE SYSTEM (ACS) CENTAUR ANALYZER

Product To Which Compared (510(K) Number If Known): CIBA CORNING ACS:180 AUTOMATED CHEMILUMINESCENCE K902336

	YES	NO	
1. Is Product A Device	✔		If **NO** = Stop
2. Is Device Subject To 510(k)?	✔		If **NO** = Stop
3. Same Indication Statement?	✔		If **YES** = Go To 5
4. Do Differences Alter The Effect Or Raise New Issues of Safety Or Effectiveness?		✔	If **YES** = Stop **NE**
5. Same Technological Characteristics?	✔		If **YES** = Go To 7
6. Could The New Characteristics Affect Safety Or Effectiveness?			If **YES** = Go To 8
7. Descriptive Characteristics Precise Enough?		✔	If **NO** = Go To 10 If **YES** = Stop **SE**
8. New Types Of Safety Or Effectiveness Questions?			If **YES** = Stop **NE**
9. Accepted Scientific Methods Exist?			If **NO** = Stop **NE**
10. Performance Data Available?	✔		If **NO** = Request Data
11. Data Demonstrate Equivalence?	✔		Final Decision: **SE**

Note: In addition to completing the form on the LAN, "yes" responses to questions 4, 6, 8, and 11, and every "no" response requires an explanation.

7

DEPARTMENT OF HEALTH & HUMAN SERVICES

Public Health Service
Food And Drug Administration
Memorandum

DATE: **July 14, 1997**

FROM: **James V. Callaghan** **CLCB**

TO: **The Record**

SUBJECT: **CHIRON DIAGNOSTICS CORP.'s, 510k submission for the CHIRON DIAGNOSTICS AUTOMATED CHEMILUMINESCENCE SYSTEM (ACS) CENTAUR ANALYZER**

K971418 ..... Submission - Clinical Chemistry Branch For Tier II
Content and Format of a 510k Submission as specified under 21 CFR 807.90

1. Submitter's name, **CHIRON DIAGNOSTICS CORP.**

Address: ..... 63 NORTH ST.
..... MEDFIELD, MA 02052
Telephone ..... 508 -359-7711 Fax 508 -359-3599
Contact person, ... WILLIAM J. PIGNATO
Establishment Registration Number: 1519113

2. Device name: **CHIRON DIAGNOSTICS AUTOMATED CHEMILUMINESCENCE SYSTEM (ACS) CENTAUR ANALYZER**

Proprietary/Trade name: CHIRON DIAGNOSTICS AUTOMATED CHEMILUMINESCENCE SYSTEM (ACS) CENTAUR ANALYZER
Common Name: .... ANALYZER, CHEMISTRY (PHOTOMETRIC, DISCRETE), FOR CLINICAL USE
Classification Name: ..... Discrete Photometric Chemistry Analyzere
- ..... Discrete Photometric Chemistry Analyzer

Primary Regulatory information
Device Classification: I
Regulation Number: ..... 21 CFR 862.2160
Product Code: ..... JJE
Panel: ..... CH

3. Identification of the Predicate Device:

Predicate Device Name ..... CIBA CORNING ACS:180 AUTOMATED CHEMILUMINESCENCE
Manufacturer ..... CIBA CORNING DIAGNOSTICS CORP.
510k Number or Clearance Information - K902336
Predicate Device Labeling ..... see N/A (on file)

- A complete description of the subject device is included in the submission.
- ..... see Page 249 of original submission

4. A statement of the Intended Use and Indications for Use of the subject device is included in the submission
- ..... see Page 259 of original submission

8

5. Substantial Equivalence

An adequate discussion is included, of how the CHIRON DIAGNOSTICS AUTOMATED CHEMILUMINESCENCE SYSTEM (ACS) CENTAUR ANALYZER is substantially equivalent to the CIBA CORNING ACS:180 AUTOMATED CHEMILUMINESCENCE. Relevant topics such as a descriptive comparison of the following items: methodology, test principle, sample requirements, physical dimensions, throughput, analysis time, software support, calibration requirements, etc.

- ..... see Pages 249-250 of original submission

6. Technological Characteristics of the Device

A discussion is provided of information concerning the operation, function, methodology, and principles of the subject device.

- ..... see Pages 249-250 of original submission

7. Performance Characteristics and Data

A discussion of the performance data for the subject device including protocols, raw data points, graphical representation, and analyses or conclusions for the following parameters as applicable (see check list) and:

- ..... see Sections 3 & 4 dated July 2, 1997

8. Labeling/Promotional Materials

Provided are of the labeling. Labeling conforms to the format and order of 809.10(b) (see check list) and see: Operator manual of original submission

9. Summary of Safety & Effectiveness in the format specified under 21 CFR 807.92

10. Truthful & Accurate Statement

- ..... see Page 15 of original submission

11. Indications for Use Form

- ..... see Page 259 of original submission

12. Software documentation that conforms to Reviewer Guidance for Computer Controlled Medical Devices Undergoing 510(k) Review.

- Description ..... see Pages 251-253 of original submission
- Certification Statement ..... see Section 5 dated July 2, 1997

In order to complete K971418, CHIRON DIAGNOSTICS CORP. adequatly responced to unable to Determine letter dated June 11, 1997

Based on the materials reviewed in CHIRON DIAGNOSTICS CORP.'s premarket notification, I recommend finding the CHIRON DIAGNOSTICS AUTOMATED CHEMILUMINESCENCE SYSTEM (ACS) CENTAUR ANALYZER Substantially Equivalent to other Discrete Photometric Chemistry Analyzere regulation 21 CFR 862.2160 Class I Device.

James V. Callaghan, MT(ASCP)
Scientific Reviewer
FDA/CDRH/DCLD/CLCB

9 8

Chiron Diagnostics Corp.'S, Submission For The Chiron Diagnostics Automated Chemiluminescence System (Acs) Centaur Analyzer					
Check each box either: Present (Yes/"Y") or Not Present (No/"N"/Not applicable). Provide an explanation for every item indicated as either "N" or "N/A"					
Specific Performance Characteristics			Y	N	N/A
	Method Comparison	- Slope, Intercept	✔ ☐		
		- Correlation	✔ ☐		
		- Range of Samples	✔ ☐		
		- Standard Error Est.	✔ ☐		
		- Bias	✔ ☐		
		- Number (N=) - Sample Comparability for Each Sample Type Claimed, e.g., Whole Blood, Serum, Plasma, Etc.	✔ ☐		
		-Sample Comparability for Each Sample Type Claimed, e.g., Whole Blood, Serum, Plasma, Etc.	✔ ☐		
2)	Precision	Within-run (Assay), and	✔ ☐		
		Between-run (Assay), or Total	✔ ☐		
		Mean(s), Calculated CV's & SD's	✔ ☐		
3)	Linearity	Recovery, Dilution, Parallelism, Other, Etc.			✔ ☐
4)	Sensitivity	Min. Detection Limit or Analytical Sensitivity	✔ ☐		
		Cutoff	✔ ☐		
	High Dose Hook Effect	High Dose Effect			✔ ☐
6)	Interferences	Bilirubin, Hemoglobin, Lipids (Triglycerides), Other, Drugs, Anticoagulants, Etc.			✔ ☐
7)	Clinical Studies for Near Patient, Bedside, or Physician's Office Use	Locations of studies (3 sites)			✔ ☐
		Investigators			✔ ☐
		Precision			✔ ☐
		Method Comparison			✔ ☐
8)	Stability Summary	Calibration Interval			✔ ☐
		Quality Control Materials - Shelf-Life			✔ ☐
		Calibration Matierials - Shelf-Life			✔ ☐
9)	Software	Validation Information	✔ ☐		
		Certification Information	✔ ☐		
10)	Expected Values	Literature References,			✔ ☐
		Population Study,			✔ ☐
		Reference Interval(s),			✔ ☐
		Medical Decision Point(s)			✔ ☐
		Critical Value(s)			✔ ☐

10

DRAFT: 21 CFR § 809.10 Labeling for *In Vitro* Diagnostic Devices - Checklist

21 CFR § 809.10(b) - labeling accompanying each product (package insert) shall bear...in the format and order specified below except where not applicable:

Check each box either, Present (Yes/"Y"), Not Present/Missing (No/"N") or, if Not Applicable (N/A)			Y	N	N/A
(1)	Proprietary & Established Names		✔		
(2)	Intended Use(s)	- state the analyte to be measured			✔
		- state if the test is quantitative or qualitative			✔
		- state the specimen type(s)	✔		
		- state any special instrument requirements			✔
		- state a concise claim of clinical utility			✔
(3)	Summary & Explanation		✔		
(4)	Test Principle		✔		
(5)	Reagents	- quantity, proportion, or concentration			✔
		- biological material (source/measure of activity)			✔
		- precautions, warnings			✔
		- "For *In Vitro* Diagnostic Use"			✔
		- instructions for reconstitution, mixing, or dilution			✔
		- storage instructions (opened/unopened)			✔
(6)	For Instruments: Operation Manual	- name	✔		
		- use/function	✔		
		- installation requirements	✔		
		- principles of operation	✔		
		- performance characteristics/specifications	✔		
		- operating instructions	✔		
		- calibration procedures	✔		
		- precautions/limitations	✔		
		- hazards	✔		
		- service/maintenance requirements	✔		
(7)	Specimen Collection & Preparation	- any special precautions or patient preparation			✔
		- any specimen additives, preservatives			✔
		- any known interferences			✔

		- storage, handling requirements			✔ ☐
(8)	Procedure	- a list of materials provided			✔ ☐
		- a list of materials required but not provided			✔ ☐
		- step by step instructions			✔ ☐
		- a description of the stability of the final reaction			✔ ☐
		- details of calibration			✔ ☐
		- details of quality control			✔ ☐
(9)	Results	- sample calculation or formula			✔ ☐
		- description of the results			✔ ☐
(10)	Limitations	- interferences			✔ ☐
		- additional testing requirements			✔ ☐
(11)	Expected Values	- stated range(s)			✔ ☐
		- literature references, or			✔ ☐
		- population characterization			✔ ☐
(12)	Specific Performance Characteristics	- accuracy (method comparison)			✔ ☐
		- precision			✔ ☐
		- specificity (cross-reactivity, etc.)			✔ ☐
		- sensitivity (lower detection limit)			✔ ☐
		- dilution/recovery/linearity			✔ ☐
		- sample comparability			✔ ☐
		- high dose hook effect			✔ ☐
(13)	Bibliography		✔ ☐		
(14)	Name/place of manufacturer, packer, or distributor		✔ ☐		
(15)	Date of last labeling revision		✔ ☐		

Other: For a multi-purpose instrument used for diagnostic purposes...may bear the information in (b) (1), (2), (6), (14), and (15).

12

K971418/H

Chiron Diagnostics Corporation
63 North Street
Medfield, Massachusetts 02052-1688
508.359.7711 Fax 508.359.3599

CHIRON | DIAGNOSTICS

July 2, 1997

RECEIVED
7 JUL 97 10 54
FDA/CDRH/ODE/DMC

U.S. Food and Drug Administration
Center for Devices and Radiological Health
Office of Device Evaluation
Document Mail Center (HFZ-401)
9200 Corporate Blvd.
Rockville, MD 20850

Re: K971418
Chiron Diagnostics Automated Chemiluminescence System (ACS) Centaur Analyzer

Chiron Diagnostics is responding to the letter from FDA dated June 19, 1997 and subsequent discussions with the subject reviewer, Mr. James Callaghan, regarding the ACS Centaur 510(k) submission. The FDA letter suggested that the premarket notification is withdrawn and the submission be deleted from FDA's system. Discussions with Mr. Callaghan, following receipt of this letter, resolved the specific issue of withdrawal resulting in the notification remaining on active review. Enclosed is a copy of the letter forwarded to Document Control of the decision not to withdraw the subject 510(k) from active review (Section 1).

With regards to the specific request for additional information, the following is provided:

(b)(4)

[redacted]

13 12

(b)(4)

[redacted]

We trust this information satisfies the request of FDA that will allow review of the Premarket Notification to proceed.

Sincerely,

William J. Pignato
Director of Regulatory Affairs
(508) 359-3825

cc: Mr. James Callaghan
Division of Clinical Laboratory Devices

14

CHIRON | DIAGNOSTICS

June 26, 1997

FILE COPY

U.S. Food and Drug Administration
Center for Devices and Radiological Health
Office of Device and Evaluation
Document Mail Center (HFZ-401)
9200 Corporate Blvd.
Rockville, Maryland 20850

FDA/CDRH/ODE/DMC
7 JUN 97 10 5

Subject: 30 Day Letter, Dated June 19, 1997

Reference: **K971418** - Chiron Diagnostics Automated Chemiluminescence System (ACS) Centaur Analyzer

I spoke with Mr. James V. Callaghan within DCLD on June 25, 1997 regarding the subject letter. I informed Mr. Callaghan that Chiron Diagnostics Corporation would provide the requested information within the 30 day timeframe because the data that he requested as the basis to withdraw this 510(k) has been generated and is available. Mr. Callaghan acknowledged this and asked that the information be forwarded to him via the Document Mail Center and that I inform the Document Mail Center of his decision not to withdraw the subject 510(k) from your active review file.

Additionally, I spoke with Ms. Marjorie Shulman on June 26, 1997 and informed her of Mr. Callaghan's decision. It is my understanding that ms. Shulman has changed the status of this 510(k) to active hold.

If you require additional information or have any questions, please call me directly at (508) 359-3877.

Sincerely,

Thomas F. Flynn
Manager, Regulatory Affairs & Compliance

15

CHIRON DIAGNOSTICS COPORATION
ACS:180 SYSTEM AND ASSAYS 510(k) APPROVAL LIST
Current as of 7/2/97

PRODUCT NAME	DC NUMBER	DATE APPROVED
1. ACS CARBAMAZEPINE ASSAY	K964765	02/14/97
2. ACS CEA	P930017	08/23/94
3. ACS CKMB II IMMUNOASSAY	K962126	06/21/96
4. ACS CORTISOL IMMUNOASSAY	K934317/S2	05/13/94
5. ACS CORTISOL IMMUNOASSAY - URINE	K945367	05/05/95
6. ACS CORTISOL IMMUNOASSAY - EXTRACTED URINE	K962559	11/05/96
7. ACS DIGOXIN IMMUNOASSAY	K931213	06/07/93
8. ACS DPD ASSAY	K963251	10/15/96
9. ACS ESTRADIOL IMMUNOASSAY.	K932715	12/03/93
10. ACS ESTRADIOL-6 IMMUNOASSAY	K954697	12/13/95
11. ACS FERRITIN IMMUNOASSAY	K905770	03/12/91
12. ACS FOLATE IMMUNOASSAY	K943297	12/12/94
13. ACS FT3 IMMUNOASSAY	K940482	04/26/94
14. ACS FrT4 IMMUNOASSAY	K961510	06/17/96
15. ACS FSH IMMUNOASSAY	K904649	11/20/90
16. ACS GENTAMICIN IMMUNOASSAY	K955020	08/02/95
17. ACS HCG IMMUNOASSAY	K925277	03/19/93
18. ACS LH2 IMMUNOASSAY	K962041	06/21/96
19. ACS PHENOBARBITOL IMMUNOASSAY	K953021	12/11/95
20. ACC PHENYTOIN IMMUNASSAY	K955873	3/11/96
21. ACS PROGESTERONE IMMUNOASSAY	K932955	08/02/93
22. ACS PROLACTIN IMMUNOASSAY	K904714	11/07/90
23. ACS PSA	P920030	08/23/94
24. ACS PSA2 (SUPPLEMENT)	P020030/S1	12/13/95
25. ACS T-UP IMMUNOASSAY	K970539	03/24/97
26. ACS T3 IMMUNOASSAY	K923646	10/25/91
27. ACS T4 IMMUNOASSAY	K905532	01/15/91
28. ACS TESTOSTERONE IMMUNOASSAY	K934562/S1	12/01/93
29. ACS THEOPHYLLINE IMMUNOASSAY	K951169	06/20/95
30. ACS TOTAL IGE IMMUNOASSAY	K920372	04/08/92
31. ACS TSH 3 IMMUNOASSAY	K951796	06/13/95
32. ACS TSH IMMUNOASSAY	K910981	04/30/91
33. ACS VANCOMYCIN IMMUNOASSAY	K951059	06/19/95
34. ACS VITAMIN B12 IMMUNOASSAY	K910343	03/06/91

Display 2

Method Comparison Summary

(b)(4)

[redacted]

Display 2

Method Comparison Summary

(b)(4)

[redacted]

Display 2

Method Comparison Summary

(b)(4)

[redacted]

Display 2

Method Comparison Summary

(b)(4)

[redacted]

Display 2

Method Comparison Summary

(b)(4)

[redacted]

Display 2

Method Comparison Summary

(b)(4)

[redacted]

(b)(4) Testing

[redacted]

83 pp

(b)(4) Testing

[redacted]

(b)(4) Testing

[redacted]

(b)(4) Testing

[redacted]

26

(b)(4) Testing

[redacted]

(b)(4) Testing

[redacted]

K971418/S1

Chiron Diagnostics Corporation
63 North Street
Medfield, Massachusetts 02052-1688
508.359.7711 Fax 508.359.3599

CHIRON | DIAGNOSTICS

June 26, 1997

U.S. Food and Drug Administration
Center for Devices and Radiological Health
Office of Device and Evaluation
Document Mail Center (HFZ-401)
9200 Corporate Blvd.
Rockville, Maryland 20850

RECEIVED
27 JUN 97 10 45
FDA/CDRH/ODE/DMC

Subject: 30 Day Letter, Dated June 19, 1997

Reference: **K971418** - Chiron Diagnostics Automated Chemiluminescence System (ACS) Centaur Analyzer

I spoke with Mr. James V. Callaghan within DCLD on June 25, 1997 regarding the subject letter. I informed Mr. Callaghan that Chiron Diagnostics Corporation would provide the requested information within the 30 day timeframe because the data that he requested as the basis to withdraw this 510(k) has been generated and is available. Mr. Callaghan acknowledged this and asked that the information be forwarded to him via the Document Mail Center and that I inform the Document Mail Center of his decision not to withdraw the subject 510(k) from your active review file.

Additionally, I spoke with Ms. Marjorie Shulman on June 26, 1997 and informed her of Mr. Callaghan's decision. It is my understanding that ms. Shulman has changed the status of this 510(k) to active hold.

If you require additional information or have any questions, please call me directly at (508) 359-3877.

Sincerely,

Thomas F. Flynn
Manager, Regulatory Affairs & Compliance

29

SK-14

DEPARTMENT OF HEALTH AND HUMAN SERVICES

Public Health Service

Food and Drug Administration
Center for Devices and
Radiological Health
Office of Device Evaluation
Document Mail Center (HFZ-401)
9200 Corporate Blvd.
Rockville, Maryland 20850

July 01, 1997

CHIRON DIAGNOSTICS CORP.
63 NORTH ST.
MEDFIELD, MA 02052
ATTN: WILLIAM J. PIGNATO

510(k) Number: K971418
Product: CHIRON DIAGNOSTICS AUTOMATED CHEMILUMINESCENC

The additional information you have submitted has been received.

We will notify you when the processing of this submission has been completed or if any additional information is required. Please remember that all correspondence concerning your submission MUST be sent to the Document Mail Center (HFZ-401) at the above letterhead address. Correspondence sent to any address other than the one above will not be considered as part of your official premarket notification submission. Because of equipment and personnel limitations we cannot accept telefaxed material as part of your official premarket notification submission, unless specifically requested of you by an FDA official.

The Safe Medical Devices Act of 1990, signed on November 28, states that you may not place this device into commercial distribution until you receive a letter from FDA allowing you to do so. As in the past, we intend to complete our review as quickly as possible. Generally we do so 90 days. However, the complexity of a submission or a requirement for additional information may occasionally cause the review to extend beyond 90 days. Thus, if you have not received a written decision or been contacted within 90 days of our receipt date you may want to check with FDA to determine the status of your submission.

If you have procedural or policy questions, please contact the Division of Small Manufacturers Assistance at (301) 443-6597 or at their toll-free number (800) 638-2041, or contact me at (301) 594-1190.

Sincerely yours,

Marjorie Shulman
Supervisory Consumer Safety Officer
Premarket Notification Section
Office of Device Evaluation
Center for Devices and
Radiological Health

30

DEPARTMENT OF HEALTH AND HUMAN SERVICES

Public Health Service

Food and Drug Administration
Center for Devices and
Radiological Health
Office of Device Evaluation
Document Mail Center (HFZ-401)
9200 Corporate Blvd.
Rockville, Maryland 20850

June 26, 1997

CHIRON DIAGNOSTICS CORP.
63 NORTH ST.
MEDFIELD, MA 02052
ATTN: WILLIAM J. PIGNATO

510(k) Number: K971418
Product: CHIRON DIAGNOSTICS AUTOMATED CHEMILUMINESCENC

We are holding your above-referenced Premarket Notification (510(k)) for 30 days pending receipt of the additional information that was requested by the Office of Device Evaluation. Please remember that all correspondence concerning your submission MUST cite your 510(k) number and be sent in duplicate to the Document Mail Center (HFZ-401) at the above letterhead address. Correspondence sent to any address other than the one above will not be considered as part of your official premarket notification submission. Because of equipment and personnel limitations, we cannot accept telefax material as part of your official premarket notification submission unless specifically requested of you by an FDA official.

If after 30 days the requested information, or a request for an extension of time, is not received, we will discontinue review of your submission and proceed to delete your file from our review system. Pursuant to 21 CFR 20.29, a copy of your 510(k) submission will remain in the Office of Device Evaluation. If you then wish to resubmit this 510(k) notification, a new number will be assigned and your submission will be considered a new premarket notification submission.

Please remember that the Safe Medical Devices Act of 1990 states that you may not place this device into commercial distribution until you receive a decision letter from FDA allowing you to do so.

If you have procedural or policy questions, please contact the Division of Small Manufacturers Assistance at (301) 443-6597 or at their toll-free number (800) 638-2041, or contact me at (301) 594-1190.

Sincerely yours,

Marjorie Shulman
Supervisor Consumer Safety Officer
Premarket Notification Section
Office of Device Evaluation
Center for Devices and
Radiological Health

31 31

DEPARTMENT OF HEALTH & HUMAN SERVICES

Public Health Service

Food and Drug Administration
2098 Gaither Road
Rockville MD 20850

JUN 19 1997

William J. Pignato
Director of Regulatory Affairs
Chiron Diagnostics Corporation
63 North Street
Medfield, Massachusetts 02052

Re: K971418
Chiron Diagnostics Automated Chemiluminescence System (ACS) Centaur Analyzer
Dated: April 14, 1997
Received: April 16, 1997

Dear Mr. Pignato:

We have reviewed your Section 510(k) notification of intent to market the device referenced above and have determined that your submission has major deficiencies. We, therefore, cannot determine if the device is substantially equivalent to a device marketed before May 28, 1976, the enactment date of the Medical Device Amendments, based solely on the information you provided. Because of the significance of the deficiencies identified below, we believe that you cannot adequately respond in 30 days as required by 21 CFR 807.87(h). Therefore, we now consider your premarket notification to be withdrawn and your submission deleted from our system. If you submit the information requested below it will be considered and processed as a new 510(k). All information previously submitted must be resubmitted so that your new 510(k) is complete. So that your new submission is complete, we require the following additional information:

(b)(4)

[redacted]

X 32

(b)(4)

[redacted]

You may not market this device until you have received a letter from FDA allowing you to do so. If you market the device without conforming to this requirement you will be in violation of the Federal Food, Drug, and Cosmetic Act.

If you have questions concerning the contents of this letter, please contact James V. Callaghan at (301) 594-1243. If you need information or assistance concerning the Investigational

33

Device Exemption regulations, please contact the Division of Small Manufacturers Assistance at its toll free number (800) 638-2041 or (301) 443-6597.

Sincerely yours,

Alfred Montgomery, D.V.M.
Acting Branch Chief
Clinical Chemistry, Toxicology,
and Hematology Branch
Division of Clinical
Laboratory Devices
Office of Device Evaluation
Center for Devices and
Radiological Health

3 34

DEPARTMENT OF HEALTH & HUMAN SERVICES

Public Health Service
Food And Drug Administration

Memorandum

Date June 12, 1997

From: Reviewer(s) - Name(s) **JAMES V. CALLAGHAN**

Subject: 510(k) Number **K971418**

To: The Record - It is my recommendation that the subject 510(k) Notification:

- ☐ Refuse to accept.
- ☒ Requires additional information (other than refuse to accept).
- ☒ Accepted for review April 22, 1997
- ☐ Is substantially equivalent to marketed devices.
- ☐ NOT substantially equivalent to marketed devices.
- ☐ Other (e.g., exempt by regulation, not a device, duplicate, etc.)

Is this device subject to Postmarket Surveillance?	☐ YES	☒ NO
Is this device subject to the Tracking Regulation?	☐ YES	☒ NO
Was clinical data necessary to support the review of this 510(k)?	☐ YES	☒ NO
Is this a prescription device?	☐ YES	☒ NO
Was this 510(k) reviewed by a Third Party?	☐ YES	☒ NO

This 510(k) contains:

Truthful and Accurate Statement ☐ Requested ☒ Enclosed
(required for originals received 3-14-95 and after)

☒ A 510(k) summary OR ☐ A 510(k) statement

☐ The required certification and summary for class III devices

☒ The indication for use form (required for originals received 1-1-96 and after)

The submitter requests under 21 CFR 807.95 (doesn't apply for SEs):

☐ No Confidentiality ☒ Confidentiality for 90 days ☐ Continued Confidentiality exceeding 90 days

Predicate Product Code with panel and class: Additional Product Code(s) with panel (optional)

REVIEW: [signature] CLCB 6-12-97
(Branch Chief) (Branch Code) (Date)

FINAL REVIEW: _____
(Division Director) (Date)

Revised: 11-20-96

4 35

DEPARTMENT OF HEALTH & HUMAN SERVICES

Public Health Service
Food And Drug Administration
Memorandum

DATE: June 12, 1997 **K971418**

FROM: James V. Callaghan **CLCB**

TO: The Record

SUBJECT: Chiron Diagnostics Automated Chemiluminescence System (ACS) Centaur Analyzer; 510k submission

OVERVIEW

Chiron Diagnostics is claiming the Chiron Diagnostics Automated Chemiluminescence System (ACS) Centaur Analyzer is substantially equivalent (SE) to the ACS: 180 K902336 (JJE). Based on this claim and the description provided by Chiron Diagnostics, of the Chiron ACS Centaur Analyzer, comparison and requirements will be to other legally marketed Automated Immunoassay Analyzer; falling under the product code JJE.

The Chiron ACS Centaur Analyzer is intended to perform immunochemical assays analysis on clinical specimens using the ACS immunoassays.

The Chiron ACS Centaur is an Automated Immunoassay Analyzer, which is intended to process ACS assays that are currently cleared for use on the ACS:180 utilizing acridinium ester as label and paramagnetic particles as the solid phase. Like the ACS:180, the ACS Centaur measures the amount of light emitted during the chemiluminescence reaction. There is direct relationship between the amount of light emitted and amount of antigen in the patient sample. The system will measure both competitive binding assays and sandwich assays.

The ACS Centaur uses a Master curve and a two-point, user initiated calibration to calibrate quantitative ACS assays. The Master Curve and the two-point calibration system eliminate the need to measure a full standard curve with each assay or to run calibrators each time the assay is run. The system stores the calibration for the interval specified in the assay product inserts.

Based on Chiron Diagnostics' description and intended use, the Chiron ACS Centaur is classified and regulated by the following:

CH JJE ANALYZER, CHEMISTRY (PHOTOMETRIC, DISCRETE), FOR CLINICAL USE----------862.2160

21 CFR § 862.2160 Discrete Photometric Chemistry Analyzer for Clinical Use.

(a) Identification. A discrete photometric chemistry analyzer for clinical use is a device intended to duplicate manual analytical procedures by performing automatically various steps such as pipetting, preparing filtrates, heating, and measuring color intensity. This device is intended for use in conjunction with certain materials to measure a variety of analytes. Different models of the device incorporate various instrumentation such as micro analysis apparatus, double beam, single, or dual channel photometers, and bichromatic 2-wavelength photometers. Some models of the device may include reagent-containing components that may also serve as reaction units.

(b) Classification. Class 1.

5 36

My review of Chiron Diagnostics' 510(k) submission is based on the following.:

PERFORMANCE DATA

Performance data for the Chiron ACS Centaur are not included in this submission.

(b)(4)

[redacted]

(b)(4)

[redacted]

James V. Callaghan, MT(ASCP)
Scientific Reviewer
FDA/CDRH/DCLD/CLCB

38

REVISED:01/22/96

PREMARKET NOTIFICATION (510(K)) CHECKLIST FOR ACCEPTANCE DECISION

K K971418 Device Name ACS Centaur Analyzer

Division/Branch DCD/CDRH

Administrative Reviewer Signature [illegible] Date 4/22/97

Supervisory Signature _____ Date _____

Did the firm request expedited review? ____ Yes ✓ No

Did we grant expedited review? ____ Yes ✓ No

Truthful and accurate statement enclosed? ✓ Yes ____ No
(If Not Enclosed, Must Be A Refuse To Accept Letter)
Required For Originals Received 3/14/95 And After

Is the Indication for Use Form enclosed? ✓ YES ____ No
(Required for Original 510(k)s received 1/1/96 and after -- must be submitted on a separate sheet of paper)

Without reviewing this 510(k), do you believe this device type may be a preamendments class III device? ____ Yes ____ No (IF YES, NOTIFY POS IMMEDIATELY IF THE OUTSIDE OF THE 510(k) HAS NOT BEEN STAMPED CLASS III SO THAT THE GMP INSPECTION CAN BE SCHEDULED AS SOON AS POSSIBLE). Class III devices can not receive a determination of substantial equivalence until the GMP inspection process has been completed.

Is this a file that was determined to be substantially equivalent by ODE, but placed on hold due to GMP violations and deleted after 12 months on hold? If so, a new ODE review is not required, please forward to POS.

____ Yes ✓ No

✓ Accepted ____ Refuse To Accept

39

29

I. CRITICAL ELEMENTS:	YES PRESENT OMISSION JUSTIFIED	NO INADEQUATE OMITTED
A. Is The Product A Device?	☑	☐
B. Is The Device Exempt From 510(k) By Regulation Or Policy?	☐	☑
C. Is Device Subject To Review By CDRH?	☑	☐
D. (i) Are You Aware That This Device Has Been The Subject Of A Previous NSE Decision?	☐	☑
(ii) If Yes, Does This New 510(k) Address The NSE Issue(s) (E.G., Performance Data)?	☐	☐
E. (i) Are You Aware Of The Submitter Being The Subject Of An Integrity Investigation? If Yes, Consult The ODE Integrity Officer.	☐	☑
(ii) Has The ODE Integrity Officer Given Permission To Proceed With The Review? (Blue Book Memo #I91-2 And Federal Register 90N-0332, September 10, 1991.)	☐	☐
F. Does The Submission Contain The Information Required Under Sections 510(k), 513(f), And 513(i) Of The Federal Food, Drug, and Cosmetic Act (Act) And Subpart E Of Part 807 In Title 21 Of The Code Of Federal Regulations?:	☐	☐
1. Device Trade Or Proprietary Name	☑	☐
2. Device Common Or Usual Name Or Classification Name	☑	☐
3. Establishment Registration Number (Only Applies If Establishment Is Registered)	☑	☐
4. Class Into Which The Device Is Classified Under (21 CFR Parts 862 to 892)	☑	☐
5. Classification Panel	☑	☐
6. Action Taken To Comply With Section 514 Of The Act	☐	☐
7. Proposed Labels, Labeling And Advertisements (If Available) That Describe The Device, Its Intended Use, And Directions For Use (Blue Book Memo #G91-1)	☑	☐

10

8. A 510(k) Summary Of Safety And Effectiveness Or A 510(k) Statement That Safety And Effectiveness Information Will Be Made Available To Any Person Upon Request	☑	☐
9. For Class III Devices Only, A Class III Certification And A Class III Summary	☐ N/A	☐
10. Photographs Of The Device	☑	☐
11. Engineering Drawings For The Device With Dimensions And Tolerances	☑	☐
12. The Marketed Device(s) To Which Equivalence Is Claimed Including Labeling And Description Of The Device	☑	☐
13. Statement Of Similarities And/Or Differences With Marketed Device(s)	☑	☐
14. Data To Show Consequences And Effects Of A Modified Device(s)	☑	☐
15. Truthful And Accurate Statement	☑	☐
II. Additional Information That <u>Is</u> Necessary Under 21 CFR 807.87(h):	☐	☐
A. Submitter's Name And Address	☑	☐
B. Contact Person, Telephone Number And Fax Number	☑	☐
C. Representative/Consultant If Applicable	☐ N/A	☐
D. Table Of Contents With Pagination	☑	☐
E. Address Of Manufacturing Facility/Facilities And, If Appropriate, Sterilization Site(s)	☑	☐
III. Additional Information That <u>May Be</u> Necessary Under 21 CFR 807.87(h):	☐	☐
A. Comparison Table Of The New Device To The Marketed Device(s)	☑	☐
B. Action Taken To Comply With Voluntary Standards	☐	☐
C. Performance Data	☐	☐
MARKETED DEVICE:	☐	☐
Bench Testing	☐	☐
Animal Testing	☐	☐
Clinical Data	☐	☐
NEW DEVICE:	☐	☐
Bench Testing	☐	☐
Animal Testing	☐	☐

10 of 11

Clinical Data	☐	☐
D. Sterilization Information	☐ n/a	☐
E. Software Information	☐	☐
F. Hardware Information	☐ n/a	☐
G. If This 510(k) Is For A Kit, Has The Kit Certification Statement Been Provided?	☐	☐
H. Is This Device Subject To Issues That Have Been Addressed In Specific Guidance Document(s)?	☐	☐
If Yes, Continue Review With Checklist From Any Appropriate Guidance Documents.	☐	☐
If No, Is 510(k) Sufficiently Complete To Allow Substantive Review?	☐	☐
I. Other (Specify)	☐	☐

REVISED:3/14/95

THE 510(K) DOCUMENTATION FORMS ARE AVAILABLE ON THE LAN UNDER 510(K) BOILERPLATES TITLED "DOCUMENTATION" AND MUST BE FILLED OUT WITH EVERY FINAL DECISION (SE, NSE, NOT A DEVICE, ETC.).

"SUBSTANTIAL EQUIVALENCE" (SE) DECISION MAKING DOCUMENTATION

K_____

Reviewer: _____

Division/Branch: _____

Device Name: _____

Product To Which Compared (510(K) Number If Known): _____

	YES	NO	
1. Is Product A Device			If NO = Stop
2. Is Device Subject To 510(k)?			If NO = Stop
3. Same Indication Statement?			If YES = Go To 5
4. Do Differences Alter The Effect Or Raise New Issues of Safety Or Effectiveness?			If YES = Stop NE
5. Same Technological Characteristics?			If YES = Go To 7
6. Could The New Characteristics Affect Safety Or Effectiveness?			If YES = Go To 8
7. Descriptive Characteristics Precise Enough?			If NO = Go To 10 If YES = Stop SE
8. New Types Of Safety Or Effectiveness Questions?			If YES = Stop NE
9. Accepted Scientific Methods Exist?			If NO = Stop NE
10. Performance Data Available?			If NO = Request Data
11. Data Demonstrate Equivalence?			Final Decision:

Note: In addition to completing the form on the LAN, "yes" responses to questions 4, 6, 8, and 11, and every "no" response requires an explanation.

43

1 ✓

DEPARTMENT OF HEALTH AND HUMAN SERVICES Public Health Service

Food and Drug Administration
Center for Devices and
Radiological Health
Office of Device Evaluation
Document Mail Center (HFZ-401)
9200 Corporate Blvd.
Rockville, Maryland 20850

April 18, 1997

CHIRON DIAGNOSTICS CORP.
63 NORTH ST.
MEDFIELD, MA 02052
ATTN: WILLIAM J. PIGNATO

510(k) Number: K971418
Received: 16-APR-97
Product: CHIRON DIAGNOSTICS AUTOMATED CHEMILUMINESCENCE SYSTEM (ASC) CENTAUR

The Center for Devices and Radiological Health (CDRH), Office of Device Evaluation (ODE), has received the Premarket Notification you submitted in accordance with Section 510(k) of the Federal Food, Drug, and Cosmetic Act (Act) for the above referenced product. We have assigned your submission a unique 510(k) number that is cited above. Please refer prominently to this 510(k) number in any future correspondence that relates to this submission. We will notify you when the processing of your premarket notification has been completed or if any additional information is required. YOU MAY NOT PLACE THIS DEVICE INTO COMMERCIAL DISTRIBUTION UNTIL YOU RECEIVE A LETTER FROM FDA ALLOWING YOU TO DO SO.

On January 1, 1996, FDA began requiring that all 510(k) submitters provide on a separate page and clearly marked "Indication For Use" the indication for use of their device. If you have not included this information on a separate page in your submission, please complete the attached and amend your 510(k) as soon as possible. Also if you have not included your 510(k) Summary or 510(k) Statement, or your Truthful and Accurate Statement, please do so as soon as possible. There may be other regulations or requirements affecting your device such as Postmarket Surveillance (Section 522 (a) (1) of the Act) and the Device Tracking regulation (21 CFR Part 821). Please contact the Division of Small Manufacturers Assistance at the number below for more information.

With regard to the Clinical Laboratory Improvement Amendments of 1988 (CLIA-88) which became effective September 1, 1992, the Center for Disease Control (CDC) and Prevention is currently handling complexity category/assignments concurrent with FDA's 510(k) review. To determine if your device requires a CLIA complexity categorization, contact CDC at (770)488-7655.

Please remember that all correspondence concerning your submission MUST be sent to the Document Mail Center (HFZ-401) at the above letterhead address. Correspondence sent to any address other than the Document Mail Center will not be considered as part of your official premarket notification submission. Because of equipment and personnel limitations, we cannot accept telefaxed material as part of your official premarket notification submission, unless specifically requested of you by an FDA official. Any telefaxed material must be followed by a hard copy to the Document Mail Center (HFZ-401).

44

13

You should be familiar with the manual entitled, "Premarket Notification 510(k) Regulatory Requirements for Medical Devices" available from DSMA. If you have other procedural or policy questions, or want information on how to check on the status of your submission (after 90 days from the receipt date), please contact DSMA at (301) 443-6597 or its toll-free number (800) 638-2041, or at their Internet address http://www.fda.gov/cdrh/dsmamain.html or me at (301) 594-1190.

Sincerely yours,

Marjorie Shulman
Consumer Safety Officer
Premarket Notification Staff

97 1448

Chiron Diagnostics Corporation
63 North Street
Medfield, Massachusetts 02052-1688
508.359.7711 Fax 508.359.3599

CHIRON | DIAGNOSTICS

April 14, 1997

RECEIVED
16 APR 97 13 12
TEA/CDRH/CDE/DMC

U.S. Food and Drug Administration
Center for Devices and Radiological Health
Office of Device and Evaluation
Document Mail Center (HFZ-401)
9200 Corporate Blvd.
Rockville, MD 20850

Re: Premarket Notification - 510(k)
Automated Chemiluminesence System (ACS) Centaur Analyzer

Pursuant to Section 510(k) of the Food, Drug, and Cosmetic Act and in accordance with 21 CFR 807.87, enclosed in duplicate is the Premarket Notification for the Chiron Diagnostics Automated Chemiluminescence System (ACS) Centaur Analyzer

The intended use of ACS:Centaur Analyzer is a stand-alone continuous operation immunochemistry analyzer intended to be used with a variety of dedicated immunodiagnostic assays currently approved for use on the ACS: 180® Analyzer.

The device is a subsequent generation of and substantially equivalent to the Chiron Diagnostics ACS: 180® Analyzer D.C.(#K902336).

In accordance with 21 CFR 807.87(j), Chiron Diagnostics Corporation makes the following Premarket Notification Truthful and Accurate Statement:

> I certify that, in my capacity as Director of Regulatory Affairs for Chiron Diagnostics Corporation, I believe to the best of my knowledge, that all data and information submitted in the Premarket Notification are truthful and accurate and that no applicable material fact has been omitted.

In accordance with 21 CFR 807.95(b)(i), Chiron Diagnostics Corporation requests that the Food and Drug Administration hold as confidential information the company's intent to market this device until commercial distribution has begun.

Sincerely,

William J. Pignato
Director of Regulatory Affairs
(508) 359-3825
(508) 359-3885

Enclosure

c/g: 510k/cent510.doc

TX 46
I

Premarket Notification - 510(k)

Chiron Diagnostics ACS:Centaur Analyzer

In accordance with 21 CFR 807.87(a-h), the following information is provided:

a) **Device Name**: Chiron Diagnostics Automated Chemiluminescence System (ACS) Centaur Analyzer

b) **Establishment Registration Number**: 1519113.

c) **Classification**:

This device is a Class I device and classified under 21 CFR 862.2160

d) **Performance Standard**: None established under Section 514.

e) **Labeling**: Included with this notification are the following:

ACS:Centaur Reference Manual (Section 1-9 and Appendices A-I)
On-Board System Reagent Labeling (Section 14)

f) **Substantial Equivalence**:

This product is substantially equivalent to the currently marketed Chiron Diagnostics ACS:180 analyzer. The assays currently approved for use with the ACS:180® will also be used on the ACS:Centaur. A comparison of features of the ACS:180® vs. the ACS:Centaur are presented in Section 12

g) **Significant Change or Modification**: Not applicable

h) **Additional Information**:

N/A

47

ACS:CENTAUR PREMARKET NOTIFICATION

TABLE OF CONTENTS

Section	Information	
I	**ACS:CENTAUR REFERENCE MANUAL**	
	Using the Manual	
Section I	System Priniples	
Section 2	System Overview	
Section 3	Workstation	
Section 4	Operating the System	
Section 5	Calibration	
Section 6	Quality Control	
Section 7	Maintenance	
Section 8	Troubleshooting	
Section 9	Setup	
Section 10	**Appendices**	
	Section A	Protection Yourself from Biohazards
	Section B	Service and Supplies
	Section C	Preinstallation and Site Requirements
	Section D	Installing and Relocating
	Section E	Reagent and Water Quality
	Section F	Specifications
	Section G	System Symbols
	Section H	References
	Section I	Glossary

48

Additional Information

Section 11	Summary of Safety and Effectiveness
Section 12	Comparison of ACS:Centaur vs. ACS:180®
Section 13	ACS: Centaur Software Development Process
Section 14	Labeling for System Fluids
Section 15	Indication for Use Statement

49

ACS:Centaur™

Reference Manual

Automated Chemiluminescence System

CHIRON | DIAGNOSTICS

Copyright 1997. Chiron Diagnostics Corporation. All rights reserved.

Printed on recycled paper

Preliminary 4/1/97 For Investigational Use Only

All Rights Reserved

This manual is copyrighted, and all rights are reserved. No part of this manual or the products it describes may be reproduced by any means or in any form without prior consent in writing from Chiron Diagnostics Corporation.

ACS:Centaur is a trademark of Chiron Diagnostics Corporation, East Walpole, MA.

Magic is a registered trademark of Chiron Diagnostics Corporation, East Walpole, MA.

GlidePoint is a registered trademark of Cirque Corporation, Salt Lake City, Utah.

Patents Pending.

Printed in U.S.A.

The information in this manual was correct at the time of printing. However, Chiron Diagnostics Corporation continues to improve products and reserves the right to change specifications, equipment, and maintenance procedures at any time without notice.

51

Contents

Using This Manual vii

Conventions ix

Special Terminology x

1 System Principles 1-1

Intended Use 1-3

Features 1-4

Technology 1-5

Direct Chemiluminescence 1-5

Antibody Binding Principles 1-6

Paramagnetic Particles and Magnetic Separation 1-7

Assay Reaction Formats 1-8

Sandwich Format 1-8

Competitive Format 1-10

Antibody Capture Format 1-13

Assay Protocols 1-16

Questions and Answers 1-17

2 System Overview 2-1

Introduction 2-3

Sample Loading Area 2-5

Reagent Loading 2-8

Primary Packs 2-8

Primary Reagent Compartment 2-9

Ancillary Packs 2-10

Ancillary Reagent Queue 2-10

Supplies and Wastes 2-11

Test Sequence 2-12
- Cuvette Loading 2-13
- Incubation Ring 2-14
- Sample Probe 2-15
- Ancillary Probe 2-16
- Reagent Probes 2-17
- Aspirate Probes, Wash Stations, and Acid Probe 2-18
- Elevator, Luminometer, and Base Probe 2-19

Questions and Answers 2-20

3 Workstation 3-1

Workstation Components 3-3

Workspace 3-6
- Status Buttons 3-7
- Task Buttons 3-8
- Function Buttons 3-8

Window Components 3-9
- Window Structure 3-9
- Window Elements 3-9
- Interacting with the Windows 3-11

Online Information 3-12
- Windows 3-12
- Fields and Buttons 3-12
- Maintenance Activities 3-12
- Event Codes 3-12

4 Operating the System 4-1

Introduction 4-3
- Manually Entering Requests at a Stand-alone System 4-3

Manually Receiving Requests from the LIS 4-4
LIS Integrated with Dynamic Download 4-5
LIS Integrated with Host Query 4-7

Loading Sample Racks 4-9
Loading Stat Samples 4-10

Replenishing Reagents 4-12
Reviewing Reagent Inventory 4-12
Reviewing Reagent Status 4-12
Reviewing Primary Reagent Status 4-13
Adding Primary Reagent Packs 4-14
Reviewing Ancillary Reagent Status 4-14
Adding Ancillary Reagent Packs 4-15

Replenishing Supplies 4-16
Reviewing Supplies Status 4-16
Preparing the Water and Waste Bottles 4-17
Adding Cuvettes 4-19
Adding Sample Tips 4-20
Emptying the Waste Bins 4-21
Replacing the System Fluids 4-24

Reviewing Inprocess Samples 4-26

Modifying the Worklist 4-28
Reviewing the Worklist Summary 4-28
Querying an LIS 4-29
Adding Patient Requests 4-29
Entering Patient Demographics 4-30
Adding Stat Requests 4-31
Adding Batch Requests 4-31
Adding Calibrator Requests 4-32
Adding Control Requests 4-33
Entering Dilution Options 4-34
Entering Reagent Options 4-35
Editing Requests 4-36

Editing Batch Requests 4-36
Deleting Requests 4-37

Evaluating the Results 4-38
Reviewing Results 4-38
Repeating a Test 4-39
Editing Results 4-39
Sending Results to an LIS 4-40
Printing Sample Results 4-40
Deleting Selected Sample Results 4-41
Deleting Worklist Results 4-42

Maintaining Data Files 4-43
Archiving Results 4-43
Restoring Archived Results 4-44

5 Calibration **5-1**

Quantitative Assays 5-3
Principle 5-3
Establishing a Master Curve 5-3
Two-Point Calibration 5-5
Calibration Evaluation Ranges 5-6
Reference Serum Calibration for T Uptake 5-8

Qualitative Assays 5-9
Principle 5-9
Calculating a Cutoff Point 5-9
Establishing a Master Curve 5-10
Calculating the Result 5-11

Defining Calibration 5-12
Defining a Master Curve 5-12
Defining Calibrator Assigned Values 5-13

Performing Calibrations 5-15
Verifying Calibration Status and Due Dates 5-15

Scheduling Calibrators 5-16
Reviewing Calibration Data 5-17
Reviewing Historical Calibration Data 5-18
Excluding a Calibration Result 5-19
Waiving an Expired Calibration 5-20
Accepting an Invalid Calibration 5-20
Printing Calibration Data 5-20

6 Quality Control 6-1

Principles 6-3
Definitions 6-3
Interpretation of Control Data 6-4
QC Principles for Quantitative Assays 6-5
QC Principles for Qualitative Assays 6-6

Defining QC 6-7
Adding a Control 6-7
Editing a QC Definition 6-8
Deleting a Control or a Test 6-8
Printing a QC Definition 6-9

Performing QC 6-10
Scheduling Controls 6-10
Autoscheduling Controls 6-11
Reviewing QC Data 6-11
Editing QC Data Points and Statistics 6-14
Printing QC Reports 6-15

7 Maintenance 7-1

Accessing Maintenance Information 7-3
Using the Maintenance Schedule 7-3
Using the Maintenance Log 7-3
Accessing Online Maintenance Procedures 7-4
Printing the Maintenance Schedule 7-4

Daily Maintenance 7-5
Daily Cleaning Procedure 7-5
Replacing the Water Bottle 7-5

Weekly Maintenance 7-6
Cleaning the Water Bottle and Water Reservoir 7-6
Cleaning the Sample Tip Waste Area 7-9

Monthly Maintenance 7-13
Performing the Monthly Cleaning Procedure 7-13
Cleaning the Reagent Probes 7-15
Cleaning the Ancillary Probe 7-17
Cleaning the Aspirate Probes 7-18
Cleaning the Cuvette Waste Area 7-19
Cleaning the Air Filter 7-24

As-Needed Maintenance 7-27
Replacing the Cleaning Solution 7-27
Cleaning the Probe Rinse Stations 7-28
Cleaning the Reagent Probe Shutter 7-29
Cleaning the Primary Reagent Compartment and Reagent Slides 7-30
Cleaning the Covers and Pointing Device 7-31
Cleaning the Sample Racks 7-31

8 Troubleshooting 8-1

Investigating System Problems 8-3

Solving Event Codes 8-4

9 Setup 9-1

Defining Test Options 9-3
Modifying Test Definitions 9-3
Modifying Reference Ranges 9-4
Defining Test Profiles 9-5
Defining Ratio Tests for Calculated Parameters 9-6

57

Defining Off-System Tests 9-7

Selecting Sample Handling Options 9-8
Selecting Sample Identification 9-8
Selecting Sample Aspirations 9-8
Selecting Sample Tube Types 9-8
Defining Repeats 9-9

Adjusting the Time 9-10

Defining Printing Options 9-11
Selecting a Printer 9-11
Selecting Paper Size 9-11
Entering a Report Header 9-12

Defining System Passwords 9-13

Defining Sample Barcode Options 9-14
Selecting the Barcode Symbology and Format 9-14
Defining Custom Barcode Labels 9-14

Defining LIS Communication Options 9-16

Appendix A: Protecting Yourself from Biohazards A-1

Appendix B: Services and Supplies B-1
Addresses and Communication Numbers B-1
Standard Instrument Warranty and Service Delivery Policy B-3
Supplies and Accessories B-6

Appendix C: Preinstallation Site Requirements C-1
Instrument C-1
Water Supply C-1
Drainage System C-2
Delivery C-2
Communications C-2
Environment C-2

58

Appendix D: Installing and Relocating D-1

Appendix E: Reagents and Water Quality E-1
System Reagents E-1
Reagent Water Quality E-1

Appendix F: Specifications F-1
Dimensions F-1
Microprocessor (CPU) Specifications F-1
Printer Specifications F-2
Environmental Specifications F-2
Outputs F-2
Luminometer Specifications F-2
Electrical Ratings and Power Requirements F-3
Primary Sample Tube Specifications F-3
Sample Transfer Cups and Tubes Specifications F-4
Microsample Containers Specifications F-4

Appendix G: System Symbols G-1

Appendix H: References H-1

Using This Manual

The *ACS:Centaur Reference Manual* provides clinical laboratory professionals with information about operating the ACS:Centaur system:

- ACS:Centaur system operators, who perform daily operating tasks such as preparing the system to run samples, scheduling and running samples, reviewing results, performing maintenance, and correcting system problems
- ACS:Centaur system key operators, who perform daily and other operating tasks such as reviewing control data, managing data files, and modifying system parameters

If you want to . . .	*Then refer to . . .*
learn about features such as continuous operation, dilutions, or reagent inventory	Section 1, *System Principles.*
review principles of chemiluminescence and assay reaction	
review the hardware and the operating sequence	Section 2, *System Overview.*
learn about the user interface components and windows	Section 3, *Workstation.*
prepare the system	Section 4, *Operating the System.*
schedule the worklist	
analyze the samples	
manage sample results and data files	
review Master Curve and two-point calibration principles	Section 5, *Calibration.*
define calibration information	
define multiple Master Curves	
view quality control statistics	Section 6, *Quality Control.*
view Levey-Jennings charts	
view monthly summaries	
perform scheduled maintenance activities	Section 7, *Maintenance.*
record maintenance activities	

60

If you want to . . .	*Then refer to . . .*
investigate and correct system problems	Section 8, *Troubleshooting*.
modify test definition parameters	Section 9, *Setup*.
modify system parameters	
review additional information such as the glossary, supplies list, or the index	Appendixes.

61

30 ~~61~~

Conventions

Several conventions are used throughout the *ACS:Centaur Reference Manual*. The following table explains the meaning of the conventions.

This convention . . .	*Indicates . . .*
BIOHAZARD:	a potentially biohazardous condition.
WARNING	a condition that may cause personal injury.
CAUTION:	a condition that may cause product damage or loss of data. On the system, this symbol indicates that you should refer to the manuals for more information.
NOTE:	information that requires your attention.
Bold	an element on the user interface. When the word "save" appears as **Save**, it refers to the **Save** button on the window.
Procedure	procedural information for maintenance tasks and for event codes accessible on the system.
?	information accessible on the system by using the **?** key on the keyboard or the **?** button in the pointing device. Online information can include information about specific entry fields, buttons, and tables or information about how to use a window.

62

31

Special Terminology

Some special terminology is used throughout the *ACS:Centaur Reference Manual.* The following table explains the meaning of the terms and the specific actions that you need to take when you see the term.

Term	Definition
Select	When a procedure instructs you to select, move the pointer to the appropriate item and then press the GlidePoint button.
Deselect	When a procedure instructs you to deselect, move the pointer to the appropriate item and then press the GlidePoint button.
Enter	When a procedure instructs you to enter information, type the specified information using the keyboard and then press Enter to store the information.
Scan	When a procedure instructs you to scan a barcode, pass the barcode scanner over the specified barcode to enter the required information.
Highlighted	When a procedure describes a highlighted item, it refers to the appearance of that item on the workspace. When you move the pointer to a line in a table or a field at a window and press the GlidePoint button, the background of the line or field changes colors. This is referred to as highlighting.
Focus	You get focus any time you select an item. When an item has focus, it has a black frame around it.

63

1 System Principles

Intended Use 1-3

Features 1-4

Technology 1-5
Direct Chemiluminescence 1-5
Antibody Binding Principles 1-6
Paramagnetic Particles and Magnetic Separation 1-7

Assay Reaction Formats 1-8
Sandwich Format 1-8
Competitive Format 1-10
AE-Labeled Antigen 1-10
AE-Labeled Antibody 1-12
Antibody Capture Format 1-13

Assay Protocols 1-16

Intended Use

The ACS:Centaur system is a stand-alone, continuous operation, immunochemistry analyzer. The ACS:Centaur system performs immunochemical assays on clinical specimens. The system menu includes endocrine, anemia, reproductive, cancer, cardiac, therapeutic drug, and infectious disease assays. All assays use direct chemiluminescent technology.

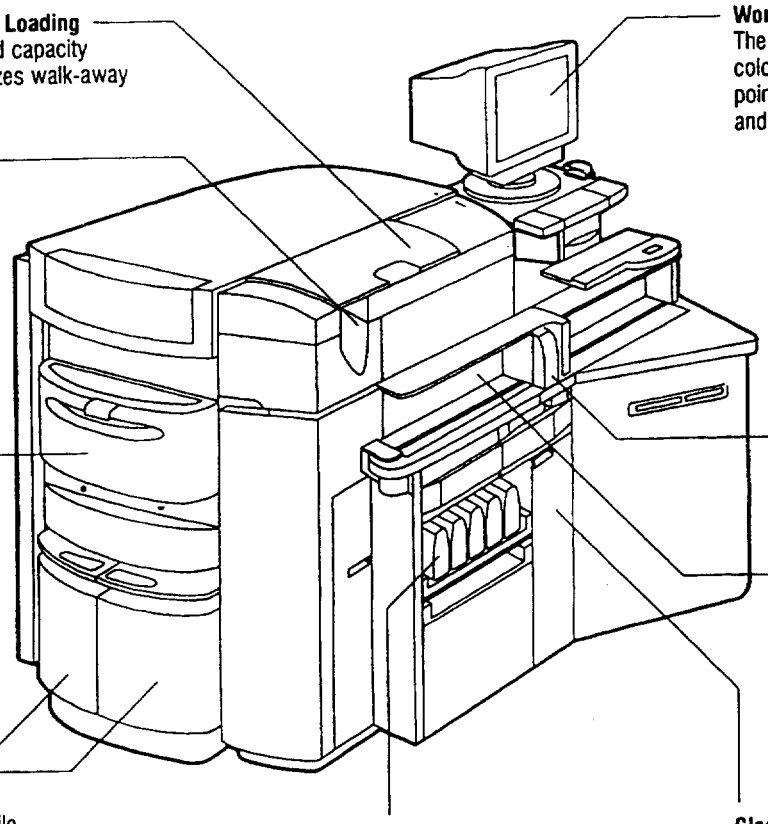

65

3r

Features

Feature	Description
Continuous Operation and Access	The system has random access and Stat mode capabilities. You can load samples, reagents, and supplies at any time.
High Throughput	The throughput is up to 240 tests per hour (excluding time to the first result).
Multiple Protocols	The flexible incubation capabilities allow multiple protocols. The system runs a broad range of tests, allowing you to consolidate workstations.
Sample Management	The system performs automatic dilutions, schedules reflex tests, and manages quality control data.
Sample Integrity	The system has a clot alert detection, management, and recovery feature, which detects complete obstructions in the sample probe and notifies the operator of the error condition.
System Management	Continuous monitoring of system, sample, and reagent status minimizes hands-on operator time at the system.
Refrigeration	Reagents remain in the refrigerated reagent areas, so the system is always ready.
Barcode Scanners	Barcode scanners eliminate or minimize the need for keyboard entry of information.
Sample Containers	The system accommodates sample cups, micro-containers, and a wide range of tube sizes.
Multiple Master Curves	The system can store up to 250 Master Curves for all assays to allow efficient transition from one lot of reagent to another.
LIS Interface	Bidirectional laboratory information system (LIS) interfaces allow you to send and receive information to your LIS. The system supports ASTM and Japanese interface protocols.
Online Information	Immediate operator help can be accessed for any window or field. You can also access online procedures for maintenance and event codes.
Modem	System data can be remotely accessed by Chiron Diagnostics to provide immediate technical assistance specifically for your system.

36

66

Technology

Direct Chemiluminescence

Chemiluminescence is a chemical reaction that emits energy in the form of light. (1–5) When used in combination with immunoassay technology, the light produced by the reaction indicates the amount of analyte in a sample.

Direct chemiluminescence reactions directly measure the light energy without the use of added steps or amplifying molecules. (6 p. 337) The ACS:Centaur assays use acridinium ester (AE) as the chemiluminescent label. AE compounds do not require the addition of a catalyst or substrate and therefore provide a direct chemiluminescent technology. (6 p. 341–343) Direct chemiluminescence using AE is highly automatable and provides many benefits over other methods. (7 94)

The ACS:Centaur assays use the dimethyl form of AE because its stability allows long reagent shelf lives. (6 p.343; 8)

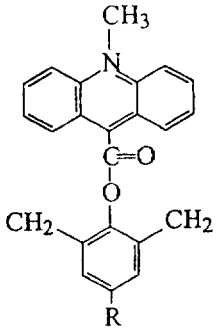

Dimethylacridinium Ester

In ACS:Centaur assays, AE is oxidized by hydrogen peroxide and the light emission is maximized by changing the environment from acidic to basic. Oxidation of AE occurs rapidly, with peak light emission occurring within one second. ACS:Centaur assays are designed to make the best use of the fast reaction time.

67

AE releases an intense, one-second burst of photons, which is a faster and more sensitive method than RIA or EIA methods. (6/345; 8)

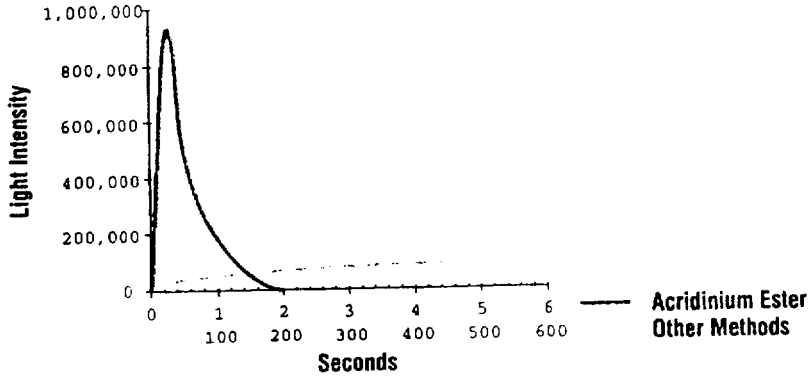

The AE molecule is much smaller than the alkaline phosphatase molecule used in EIA assays. This smaller size decreases blockage of binding sites, increases diffusion rates, and increases the assay sensitivity. (9)

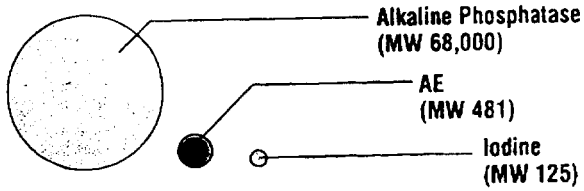

[Use spheres to denote relative sizes, not circles; or recalculate relative sizes w/ area]

Antibody Binding Principles

Antibodies are proteins that are produced by the immune system in response to a foreign substance (antigen). (T5) Antibodies specifically bind to the antigen that caused their production.

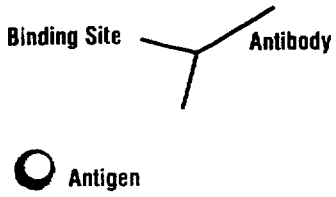

Antibodies are ideal for use in immunoassays because they can be produced to bind to a specific analyte. In immunoassays, antibodies bind to the analyte that is being measured.

A substance such as AE can be covalently bound to an antibody without altering its ability to bind to an antigen. To measure an analyte, some ACS:Centaur assays use antibodies that are covalently bound to AE.

69

35

69

Paramagnetic Particles and Magnetic Separation

Paramagnetic particles (PMP) are iron oxide crystals that are attracted to a magnetic field. (7) The ACS:Centaur assays use PMP coated with antibody or antigen, which is called the Solid Phase. (7) When the reaction mixture is exposed to a magnetic field, the PMP is drawn toward the magnets. While the magnets hold the PMP in place, materials not bound to the PMP are washed away.

The PMP provides approximately 50 times the reactive surface area of coated tubes or beads.(6) As a result, ACS:Centaur assays bind the analyte quickly and efficiently.

Assay Reaction Formats

The ACS:Centaur system directly measures the amount of light that the chemiluminescent reaction emits. ACS:Centaur assays use AE as the label in Lite Reagent and PMP as the Solid Phase. The system uses a variety of formats to detect antigens as well as antibodies. For more information about the reaction formats and principles for specific assays, refer to the product inserts.

The ACS:Centaur system applies the immunoassay binding principles of antibodies using different formats:

- sandwich format
- competitive format
- antibody capture format

Sandwich Format

Sandwich binding formats can use AE-labeled antibody or AE-labeled antigen. The sandwich format explained in this section uses AE-labeled antibody.

1. AE-labeled antibody is added to the sample. The AE-labeled antibody binds specifically to the sample antigen, which is being measured.

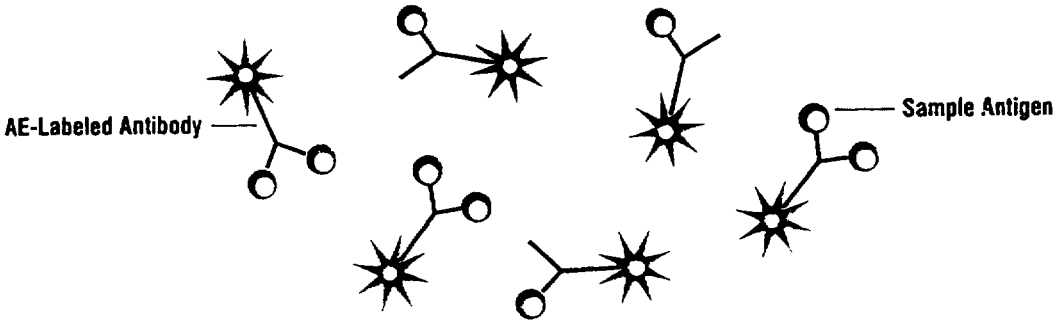

70

40

2. The PMP, which is covalently bound to antibody specific for the sample antigen, is added. The reaction mixture is incubated at 37°C. The PMP binds with the sample antigens bound to AE-labeled antibody.

[Add AE–antigen molecules to demonstrate what's happening in last sentence above]

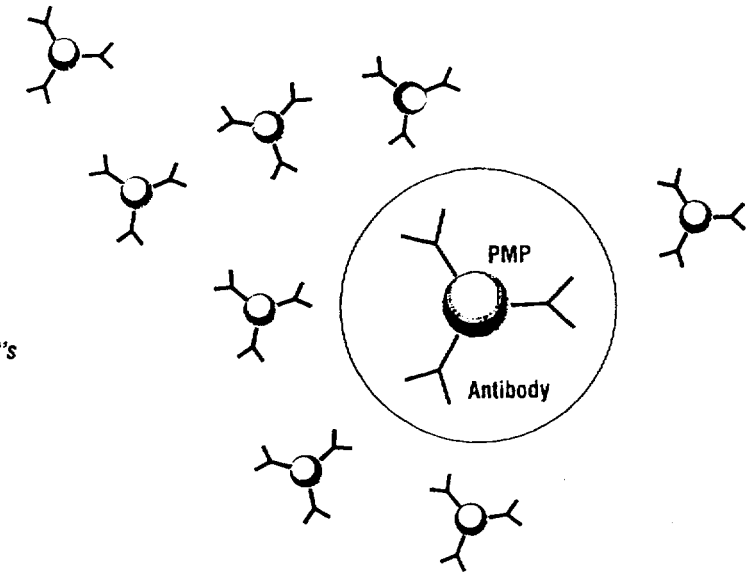

3. The reaction mixture is exposed to a magnetic field, which draws the PMP toward the magnets. While the magnets hold the PMP in place, everything not bound to the PMP is washed away. The cuvette now contains sample antigen bound to AE, which is bound to the PMP by the antibody.

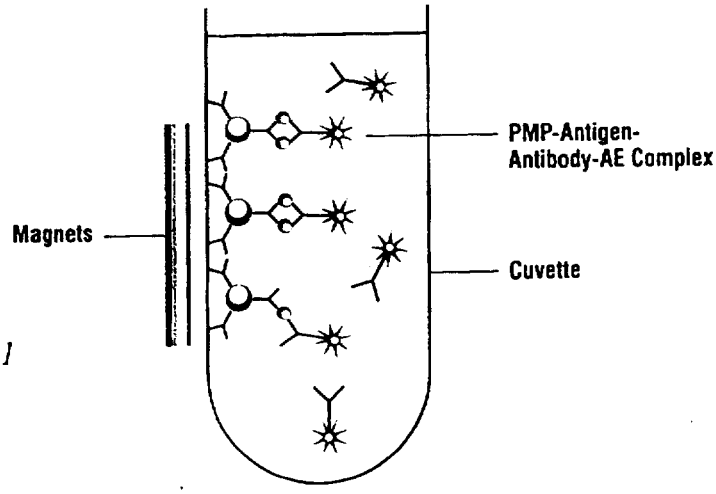

[Add info]

4. Acid and base are added to initiate the chemiluminescent reaction. The emission of photons is measured in relative light units (RLUs). Once the light produced from the oxidation of the AE is quantitated, the system calculates the concentration of the analyte.

   In a sandwich binding format, the sample concentration and the light emission have a direct relationship. The more sample antigen molecules that are present, the more AE that is present, and therefore the higher the light emission.

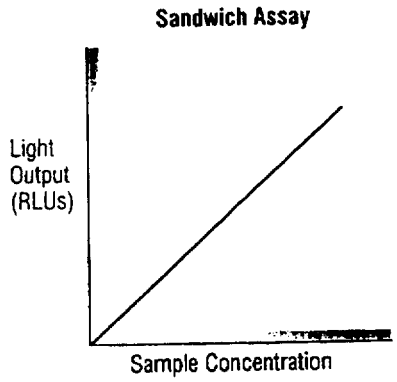

Competitive Format

Competitive binding formats include:

- AE-labeled antigen
- AE-labeled antibody

AE-Labeled Antigen

1. AE-labeled antigen and antibody-labeled PMP are added to the sample. The reaction mixture is incubated at 37°C. The AE-labeled antigen competes with sample antigen for limited binding sites on the antibody, which is covalently bound to PMP.

   The more sample antigen that is present, the less AE-labeled antigen that is bound. Alternatively, the less sample antigen that is present, the more AE-labeled antigen that is bound.

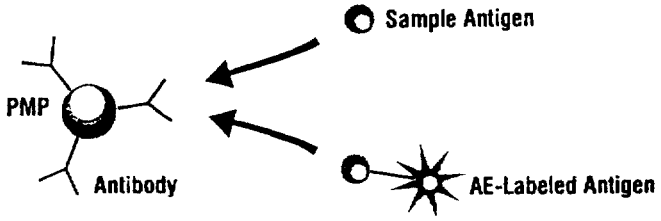

73

2. The reaction mixture is exposed to a magnetic field, which draws the PMP toward the magnets. While the magnets hold the PMP in place, everything not bound to the PMP is washed away. The cuvette now contains sample antigen and AE antigen bound to the PMP by the antibody.

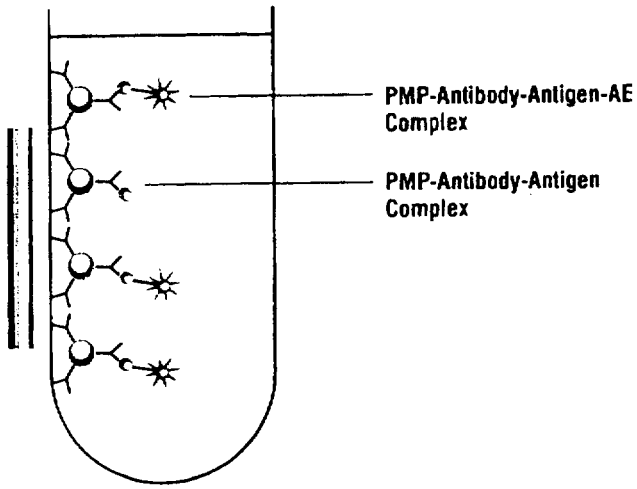

3. Acid and base are added to initiate the chemiluminescent reaction. The emission of photons is measured in RLUs. Once the light produced from the oxidation of the AE is quantitated, the system can calculate the concentration of the analyte.

   If the sample has a low concentration of antigen, most of the binding sites on the antibody are bound by AE-labeled antigen. This results in a high reading of RLUs from the oxidation of the AE.

   If the sample has a high concentration of antigen, most of the binding sites on the antibody are bound with sample antigen and few sites are bound with AE-labeled antigen. This results in a low reading of RLUs from the oxidation of the AE.

   In a competitive assay, the sample concentration and the light emission in RLUs have an inverse relationship.

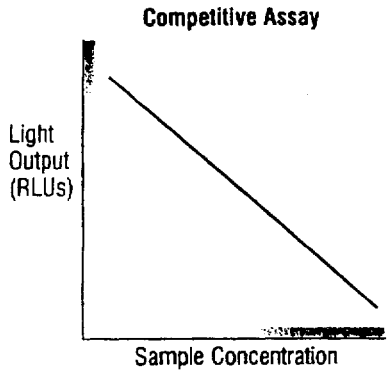

73

43

AE-Labeled Antibody

1. AE-labeled antibody and antigen-labeled PMP are added to the sample. The reaction mixture is incubated at 37°C. Antigen bound to PMP competes with sample antigen for limited binding sites on the AE-labeled antibody.

   The more sample antigen that is present, the less PMP-labeled antigen that is bound. Alternatively, the less sample antigen that is present, the more PMP-labeled antigen that is bound.

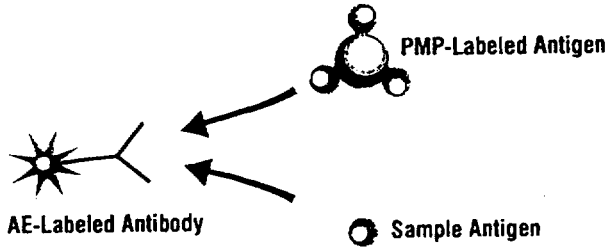

2. The reaction mixture is exposed to a magnetic field, which draws the PMP toward the magnets. While the magnets hold the PMP in place, everything not bound to the PMP is washed away.

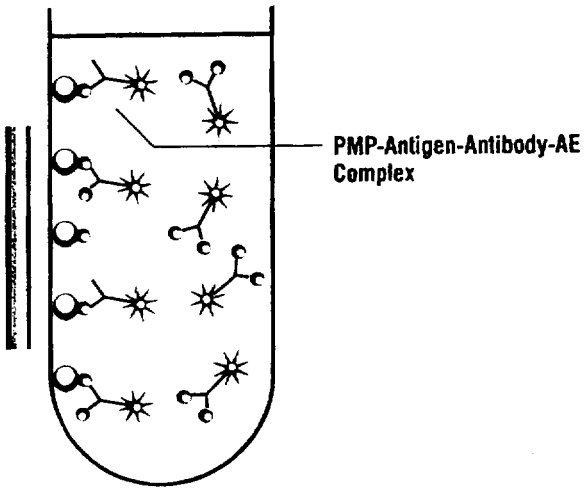

3. Acid and base are added to initiate the chemiluminescent reaction. The emission of photons is measured in RLUs. Once the light produced from the oxidation of the AE is quantitated, the system calculates the concentration of the analyte.

   If the sample has a low concentration of antigen, most of the binding sites on the antibody are bound by PMP-labeled antigen. This results in a high reading of RLUs from the oxidation of the AE.

74
44

If the sample has a high concentration of antigen, most of the binding sites on the antibody are bound with sample antigen and few sites are bound with PMP-labeled antigen. This results in a low reading of RLUs from the oxidation of the AE.

In a competitive assay, the sample concentration and the light emission in RLUs have an inverse relationship.

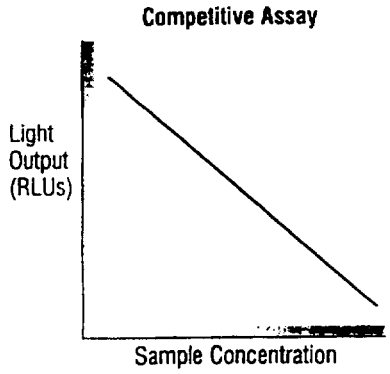

Antibody Capture Format

The antibody capture format is used when the analyte being measured is an antibody. In these assays, the sample antibody is the analyte in the reaction mixture. The reaction mixture contains a different antibody that is specifically directed against the antibody in the sample.

Antibody capture formats are characterized by two cycles of incubation and wash. The purpose of the first incubation/wash is to remove excess interfering substances in the sample.

The following example is an antibody capture assay that detects human IgM antibody in a patient sample.

1. Anti-human IgM antibody bound to PMP is added to the sample. The reaction mixture is incubated at 37°C. The human IgM antibody in the sample binds to the anti-human IgM antibody that is covalently bound to PMP.

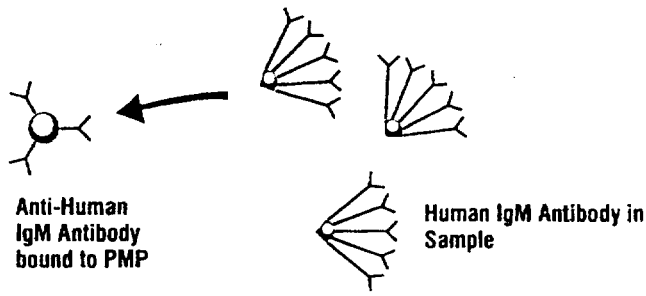

75

2. The reaction mixture is exposed to a magnetic field, which draws the PMP toward the magnets. While the magnets hold the PMP in place, everything not bound to the PMP is washed away. The cuvette now contains human IgM antibody captured by specific anti-human IgM antibody, which is bound to PMP.

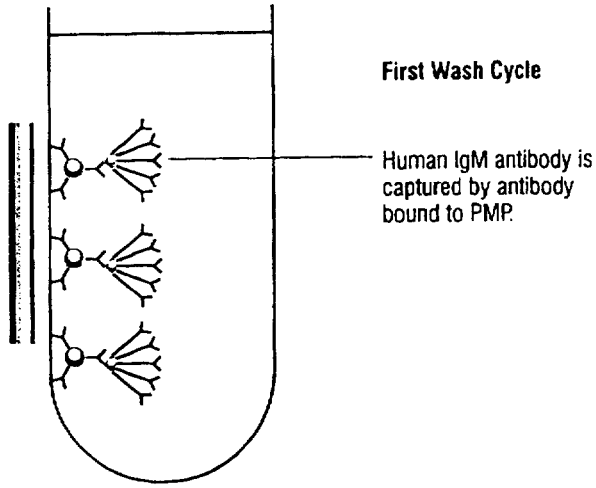

3. AE-labeled antigen is added. The reaction mixture is incubated at 37°C. The AE-labeled antigen has an affinity for the sample antibody.

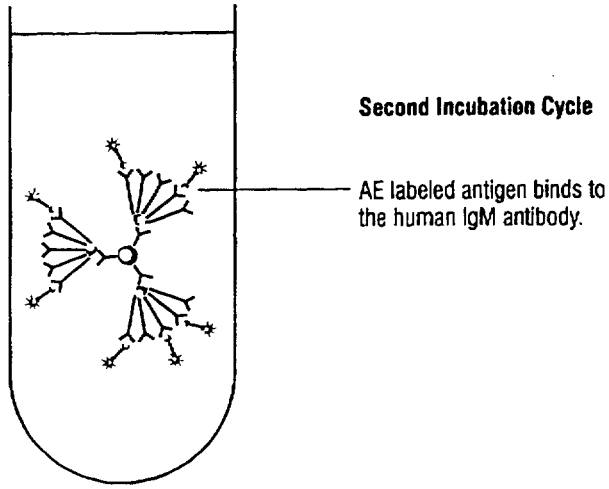

4. The reaction mixture is again exposed to a magnetic field, which draws the PMP toward the magnets. While the magnets hold the PMP in place, everything not bound to the PMP is washed away. The cuvette now contains AE-labeled antigen, bound to human IgM antibody, bound to PMP.

76

10

5. Acid and base are added to initiate the chemiluminescent reaction. The emission of photons is measured in RLUs. Once the light produced from the oxidation of the AE is quantitated, the system calculates the concentration of the analyte.

   The sample concentration and the light emission have a direct relationship in this example of an antibody capture format. The more sample antibody that is present, the more AE that is present, and therefore the higher the light emission.

Antibody Capture Format

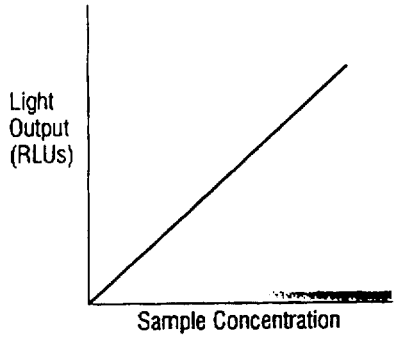

47 77 78

Assay Protocols

One-step and extended one-step protocols include one wash after the incubation, or one incubation/wash cycle. Two-step protocols include two incubation/wash cycles.

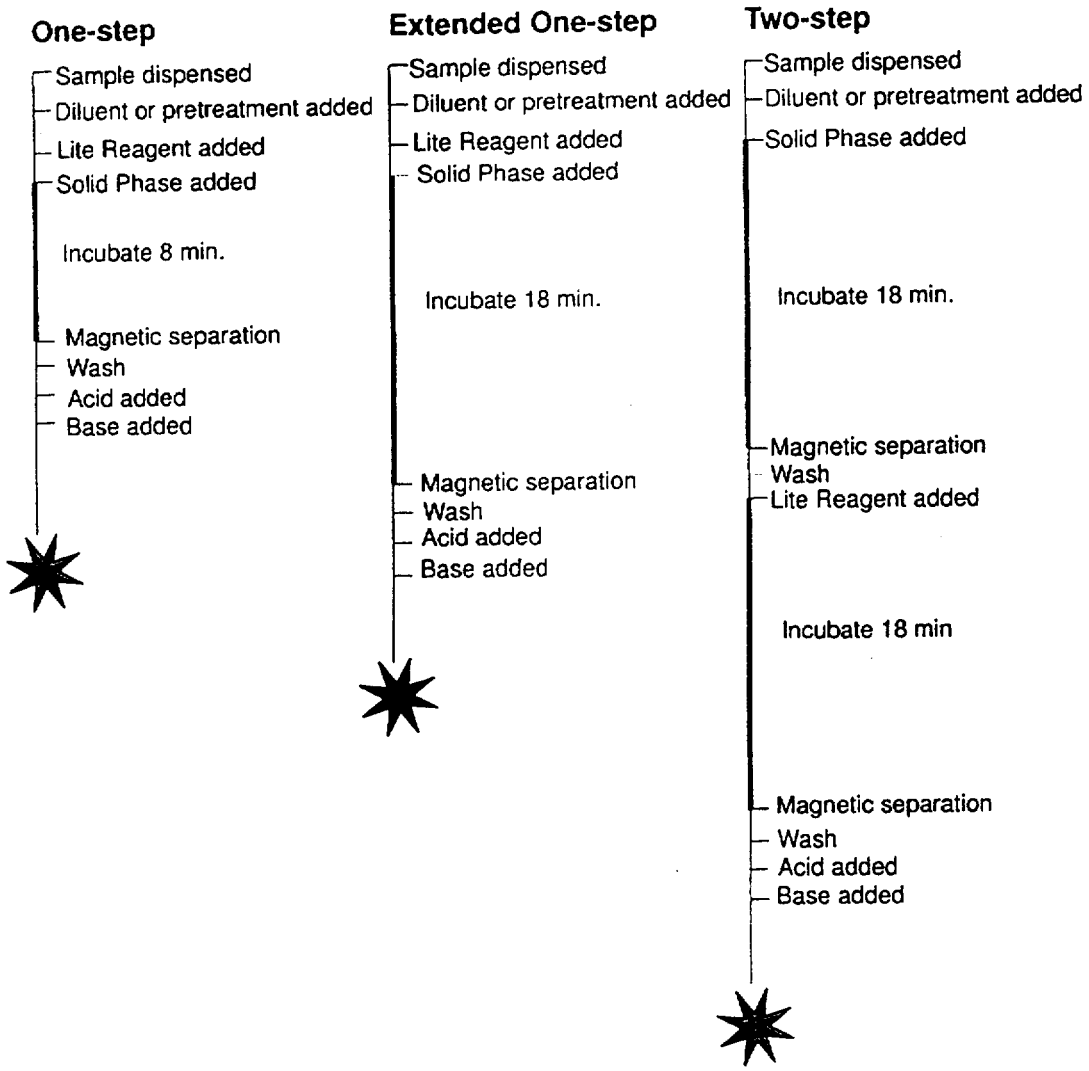

48

78

2 System Overview

Introduction 2-3

Sample Loading Area 2-5

Reagent Loading 2-8
Primary Packs 2-8
Primary Reagent Compartment 2-9
Ancillary Packs 2-10
Ancillary Reagent Queue 2-10

Supplies and Wastes 2-11

Test Sequence 2-12
Cuvette Loading 2-13
Incubation Ring 2-14
Sample Probe 2-15
Ancillary Probe 2-16
Reagent Probes 2-17
Aspirate Probes, Wash Stations, and Acid Probe 2-18
Elevator, Luminometer, and Base Probe 2-19

Introduction

This section introduces the operating sequence of the system and describes the location and function of the major subsystems and components in order to:

- keep the ACS:Centaur operating continuously for maximum efficiency
- perform the maintenance tasks
- understand the basic test processing sequence, which is essential for effective troubleshooting

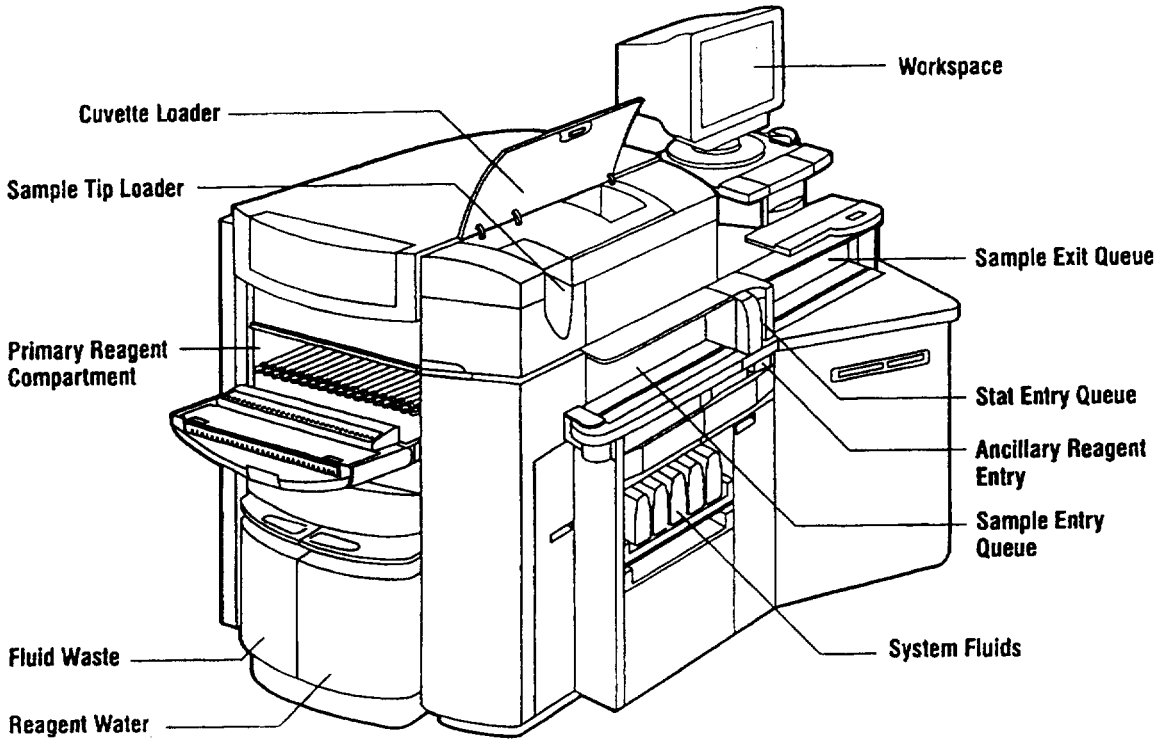

80

Operation of the ACS:Centaur system includes the following areas:

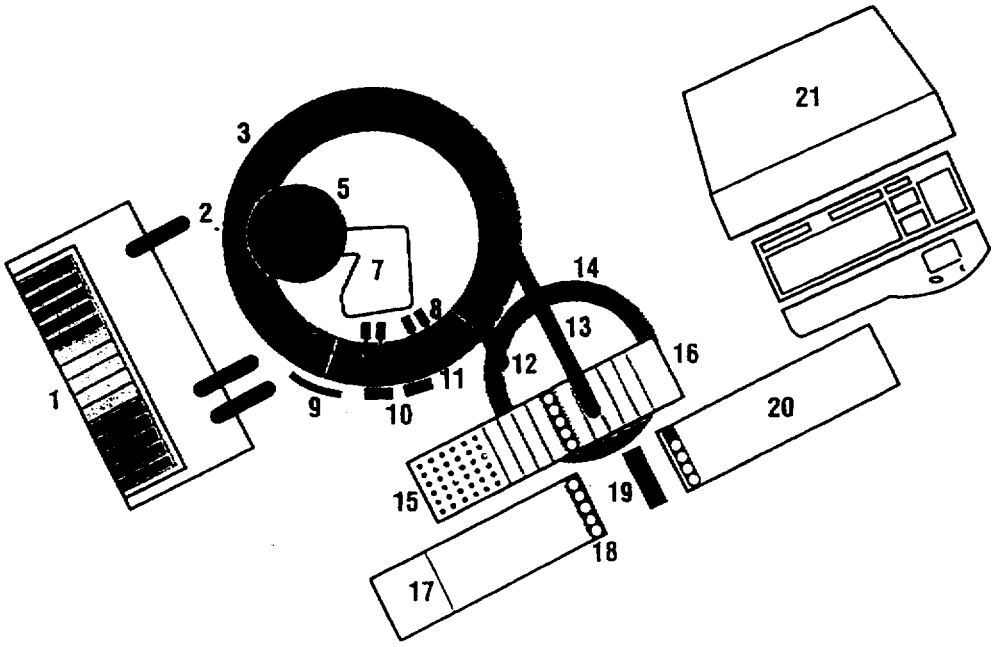

1 Primary Reagent Compartment
2 Primary Reagent Probes
3 Incubation Ring
4 Luminometer
5 Waste Probe
6 Base Probe
7 Cuvette Loading Bin
8 Aspirate Probes
9 Magnets
10 Wash Block
11 Acid Probe
12 Ancillary Probe
13 Sample Probe
14 Ancillary Queue
15 Sample Tip Tray
16 Inprocess Queue
17 Sample Entry Queue
18 Sample Rack
19 Stat Entry
20 Sample Exit Queue
21 Workstation

81

51

Sample Loading Area

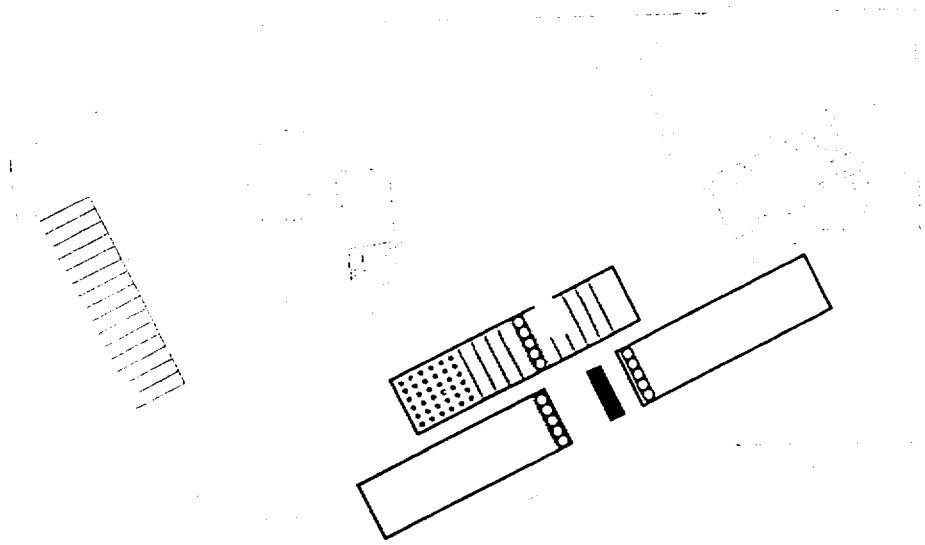

The operator selects the tube size for each sample rack, places the samples in the racks, and places the racks on the sample entry queue. The sample entry queue moves the racks to the inprocess queue.

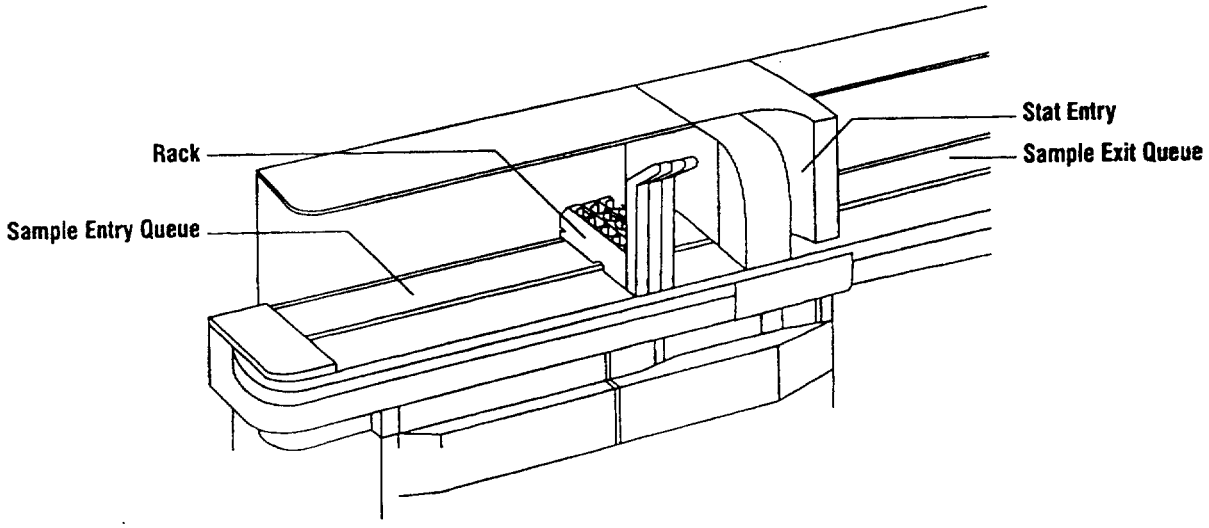

82

The sample rack is a universal, five-position rack that holds primary sample tubes or sample cups. The tube selector on each sample rack allows the operator to specify the tube size for the rack. The rack accommodates the tube sizes or sample cup sizes without additional adapters. The operator can specify up to four types of tubes at setup to be run on the system at one time.

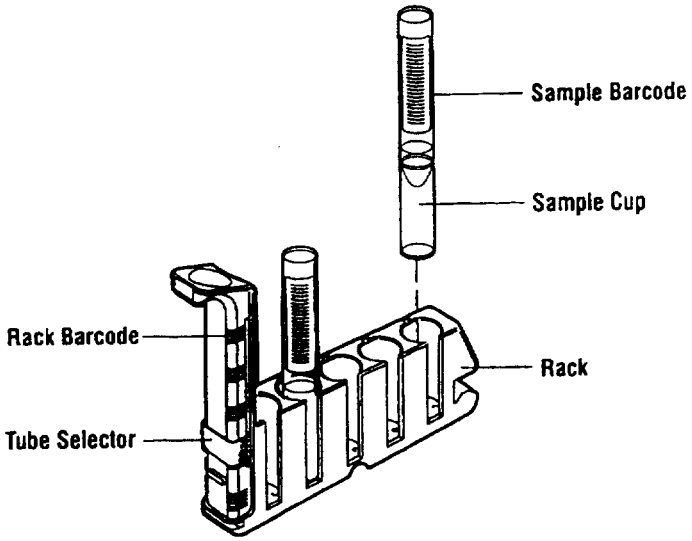

Each sample rack accommodates one sample cup or tube size on a rack. The barcode label on the sample cup or tube is visible and faces to the right when installed.

The operator places the racks in the sample entry queue, which holds up to 21 sample racks. If the sample entry queue is in standby, the operator presses the sample start button to activate the sample entry queue. The sample entry queue moves the sample racks one at a time to the inprocess queue.

The operator places Stat samples in a rack and installs the rack in the Stat entry. The system automatically assigns Stat priority to all samples in racks loaded in the Stat entry. The Stat entry moves the rack to the inprocess queue as soon as space is available. During setup, the operator can specify the number of inprocess queue spaces reserved for Stat racks.

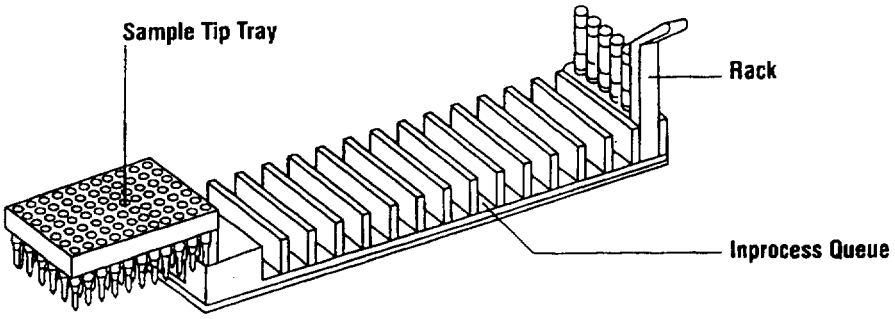

83

13

As racks enter the inprocess queue, the sample barcode scanner reads the barcode labels on each sample cup or tube. The scanner also scans the rack barcode.

On the left end of the inprocess queue is the sample tip loader, which holds a sample tip tray. The inprocess queue moves the sample tips to the sample probe and the sample probe picks up a sample tip. The probe aspirates the sample from the sample cup or primary tube and dispenses the sample into a cuvette.

After each sample in the rack has been sampled, the rack moves from the inprocess queue to the sample exit queue.

84

14

Reagent Loading

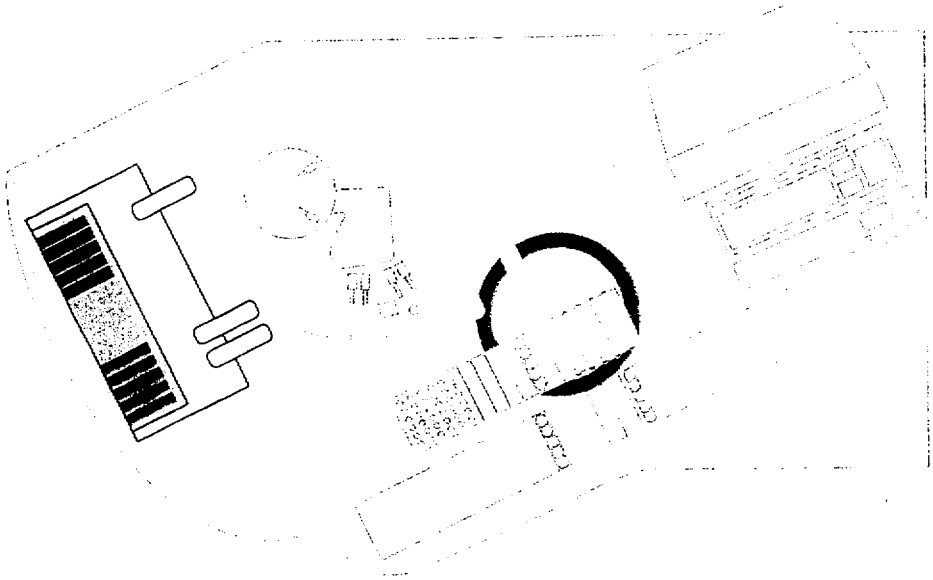

The operator can load ReadyPacks™ (primary reagent packs) and ancillary reagent packs while the system processes samples. The system stores up to 30 primary packs and up to 15 ancillary packs.

Primary Packs

Each primary pack contains Solid Phase and Lite Reagent with a third compartment for an additional reagent, if required. Each primary pack has a unique barcode that the system uses to identify the pack. The system tracks the volumes in each compartment and calculates the remaining number of tests in the pack.

After a reagent probe pierces the membrane on a pack, the reagent is stable for a minimum of 14 consecutive days unless otherwise stated on the label or in the product insert.

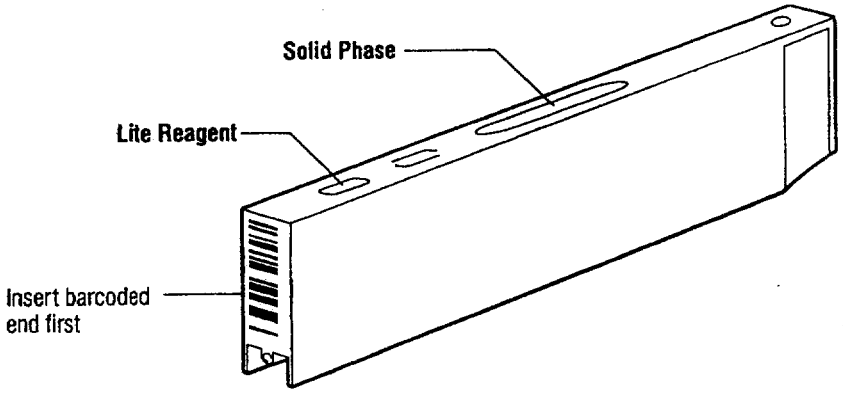

85

Primary Reagent Compartment

The operator loads the primary packs on the reagent slides in the primary reagent compartment, which stores the reagents at 6 to 14°C (43 to 57°F). The primary reagent shelf mixes the packs to maintain the reagents in suspension. Light-emitting diodes (LEDs) on the primary reagent door illuminate to indicate the pack status.

- If the LED is lit, then the pack cannot be removed because it is in use by the system.
- If the LED is not lit, then the pack can be removed.

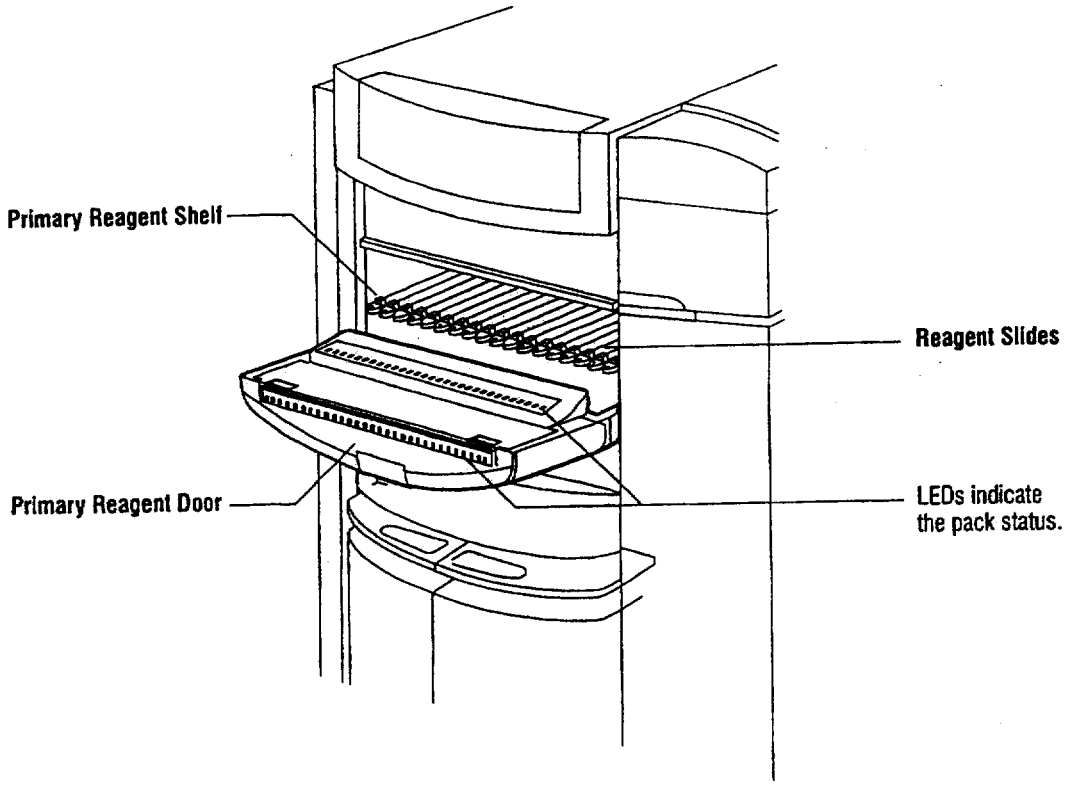

Ancillary Packs

Each ancillary pack contains one ancillary reagent. The system tracks the fluid volume in the ancillary packs that are ready to use. Each ancillary pack has a unique barcode that the system uses to identify the pack and track the volume remaining in the pack. Refer to the product inserts for ancillary reagent stability. Some ancillary packs are refillable.

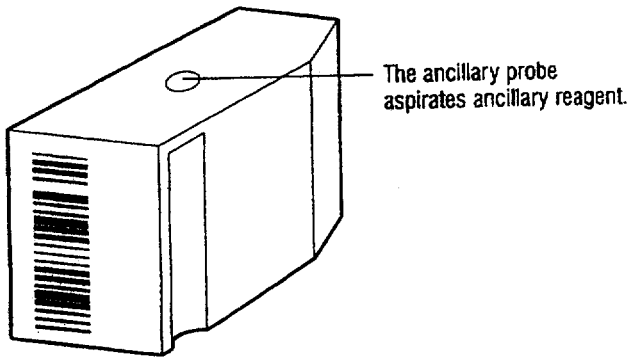

Ancillary Reagent Queue

The operator loads an ancillary pack in and removes the packs from the ancillary reagent entry. The ancillary reagent queue stores the ancillary packs at a temperature of 6 to 14°C (43 to 57°F).

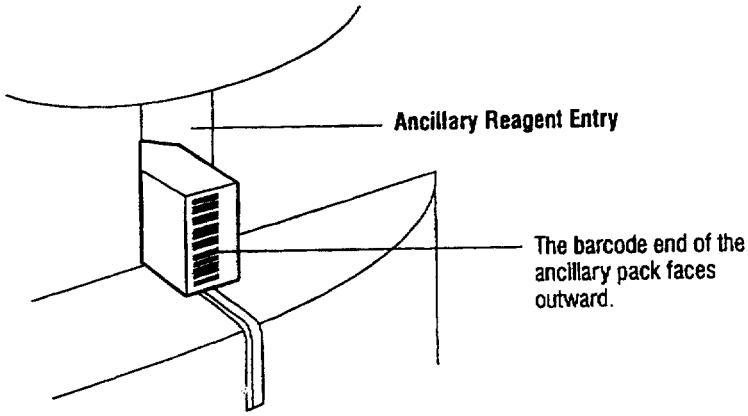

87

57

Supplies and Wastes

The system requires occasional replenishing of supplies and emptying of wastes. Refer to *Replenishing Supplies* in section 4 for procedures describing how to replenish supplies and empty wastes.

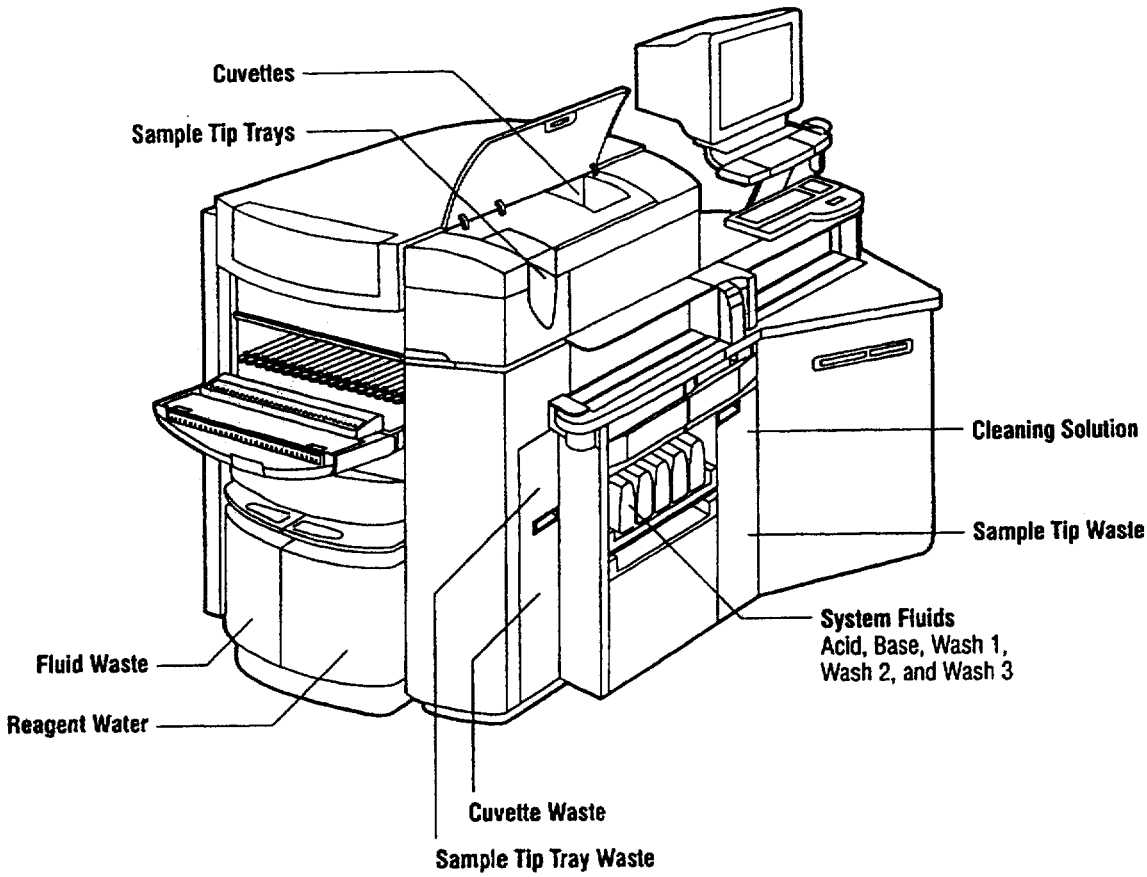

88

Test Sequence

The operator can start the sample entry queue by pressing the sample start button near the sample entry queue. The system automatically stops when sample processing completes.

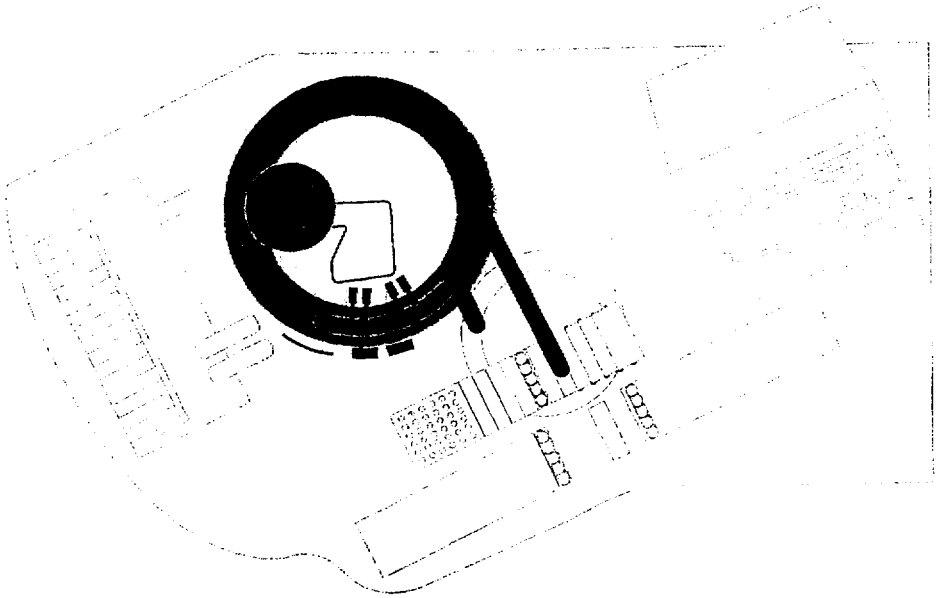

89

Cuvette Loading

The cuvette conveyor moves cuvettes from the cuvette loading bin to the orientation chute. The orientation chute correctly positions the cuvette before it enters the vertical cuvette chute. The vertical cuvette chute connects to the preheater, which warms the cuvettes to a temperature of 37°C. The cuvette then enters the incubation ring.

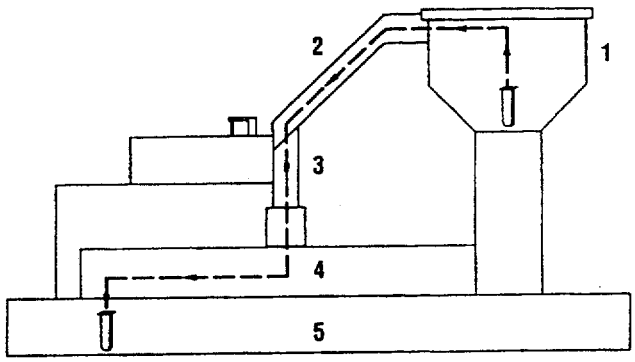

1 Cuvette Loading Bin
2 Orientation Chute
3 Vertical Cuvette Chute
4 Preheater
5 Incubation Ring

Incubation Ring

The incubation ring is a cylindrical, insulated track that incubates the assay reaction mixture in the cuvette. The ring moves cuvettes from the preheater to the probes and the magnets. The ring advances the cuvettes at 15-second intervals and incubates the cuvettes at 37°C. The magnets attract the magnetic particles (PMP) to the side of the cuvette and separate the bound sample from the unbound sample during the aspirate and wash cycles. The ring then moves the cuvette to the luminometer.

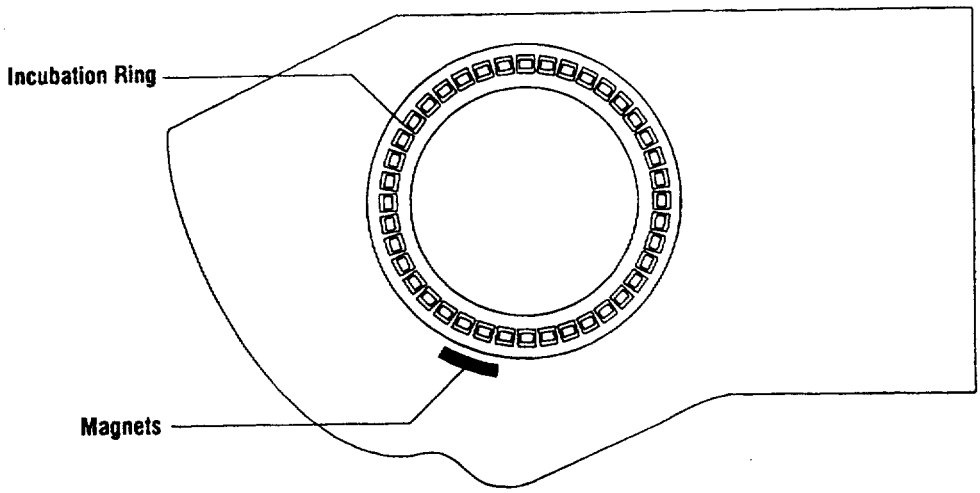

91

61

Sample Probe

The sample moves from the sample entry queue or the Stat entry past the barcode reader to the inprocess queue. The sample then moves to the sample probe for sampling and then to the sample exit queue.

The sample probe picks up a disposable sample tip from the sample tip tray. The sample probe aspirates sample from the inprocess queue, dispenses sample into a cuvette in the incubation ring, and dilutes the sample if requested. After dispensing the sample, the tip remover removes the sample tip.

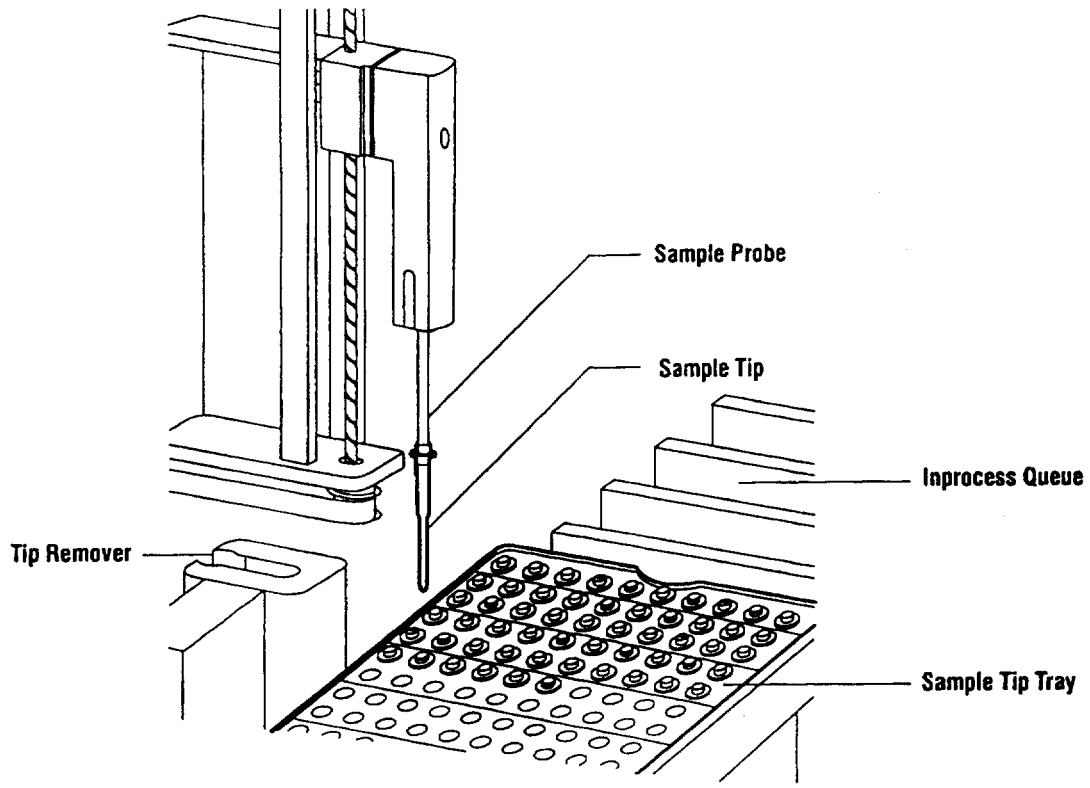

The clot alert feature detects complete obstructions in the sample probe by monitoring the fluid pressure in the sample probe. The fluid level sensor detects when the sample probe tip reaches fluid.

The system optimizes sampling for maximum throughput, taking into account the types of tests that are requested on the samples in the inprocess queue.

92

Ancillary Probe

The ancillary probe aspirates the ancillary reagents from the ancillary packs in the ancillary queue and dispenses ancillary reagents into cuvettes in the incubation ring. The rinse station rinses the probe with reagent water before each reagent aspiration.

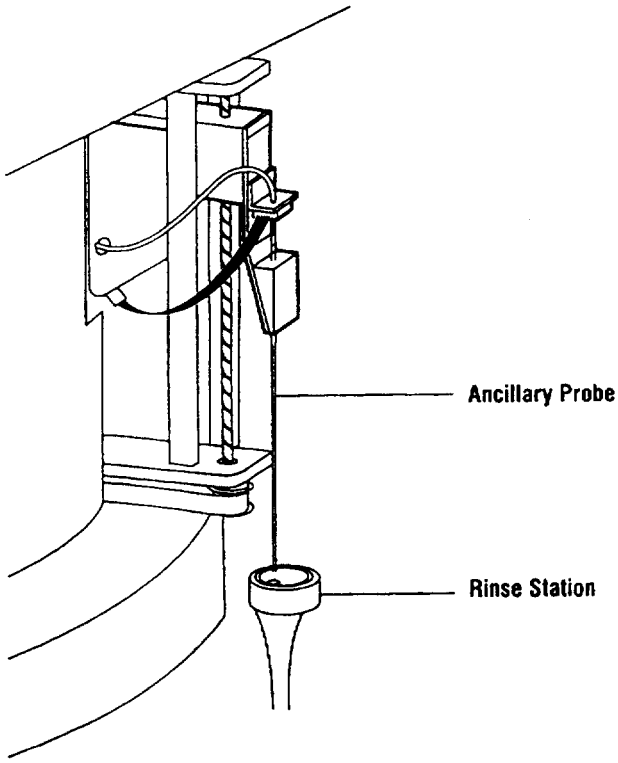

93

Reagent Probes

The incubation ring moves the cuvettes to the reagent probes. The three reagent probes move independently of each other to aspirate primary reagents from the primary packs and to dispense primary reagents into cuvettes in the incubation ring. The rinse stations rinse the probes with reagent water before each reagent aspiration.

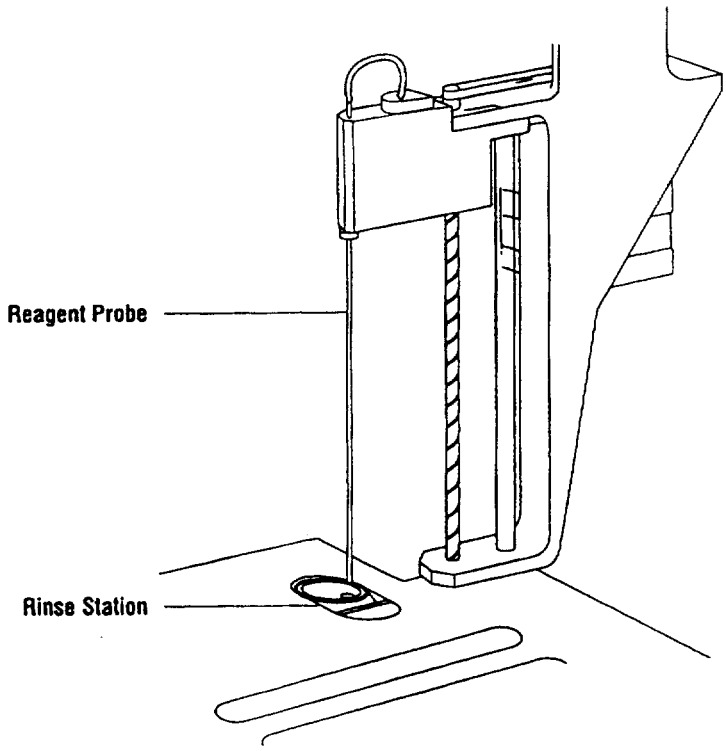

94

~~64~~ 95

Aspirate Probes, Wash Stations, and Acid Probe

The incubation ring moves the cuvettes to the aspirate probes and the acid probe. After the magnetic particles are pulled to the side of the cuvette, the aspirate probes draw fluid out of the cuvettes. The wash stations dispense wash fluid into the cuvettes to wash the magnetic particles. The displacement station dispenses wash fluid into the cuvettes to resuspend the magnetic particles.

The acid probe dispenses acid reagent into the cuvette. The system fluid drawer contains acid reagent and wash fluids.

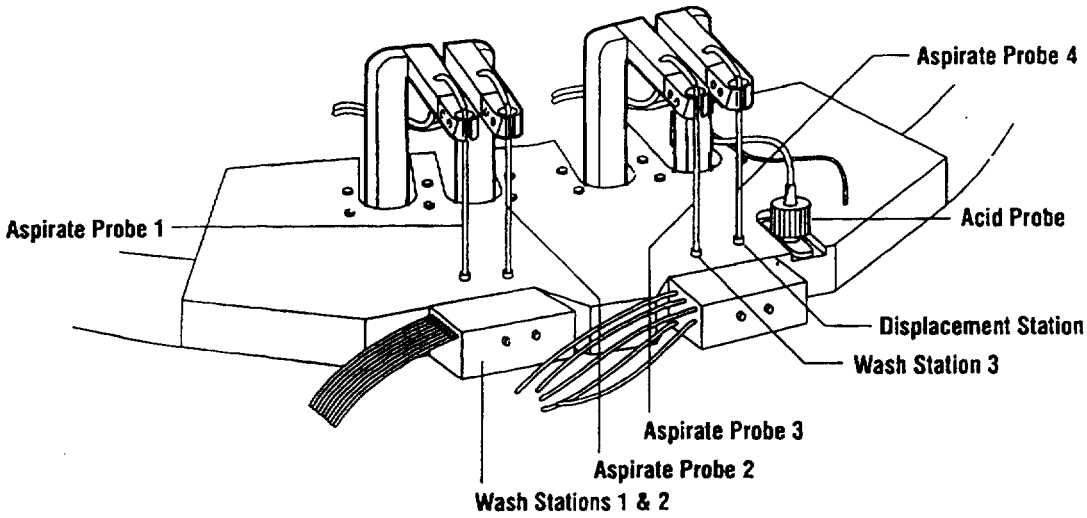

95

~~65~~ 96

Elevator, Luminometer, and Base Probe

After acid reagent is added to cuvettes, the incubation ring moves the cuvettes to the elevator. The elevator lifts cuvettes from the incubation ring into the luminometer.

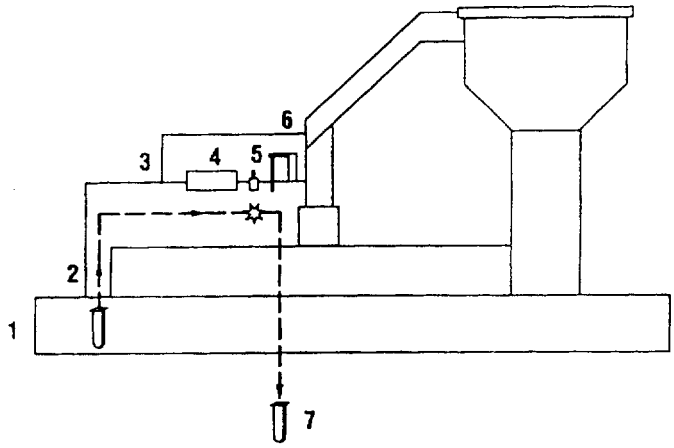

1	Incubation Ring	5	Base Probe
2	Elevator	6	Waste Probe
3	Luminometer	7	Cuvette
4	PMT		

The luminometer has a photomultiplier tube (PMT) with photon-counting electronics, a reference LED, a base probe, and a waste probe. Base reagent is injected into the cuvette, and the chemiluminescent reaction occurs and emits light. The luminometer measures the light as relative light units (RLUs). The waste probe then aspirates the waste fluid from the cuvette and the cuvette drops into the cuvette waste bin.

96

3 Workstation

Workstation Components	**3-3**
GlidePoint Pointing Device	3-3
Barcode Scanner	3-4
Keyboard	3-5
Monitor	3-5
Workspace	**3-6**
Status Buttons	3-7
Task Buttons	3-8
Function Buttons	3-8
Window Components	**3-9**
Window Structure	3-9
Window Elements	3-9
Interacting with the Windows	3-11
Online Information	**3-12**
Windows	3-12
Fields and Buttons	3-12
Maintenance Activities	3-12
Event Codes	3-12

97

b)

48

Workstation Components

You use the ACS:Centaur workstation to control the operation of the system. The workstation consists of hardware and software that you use to interact with the system.

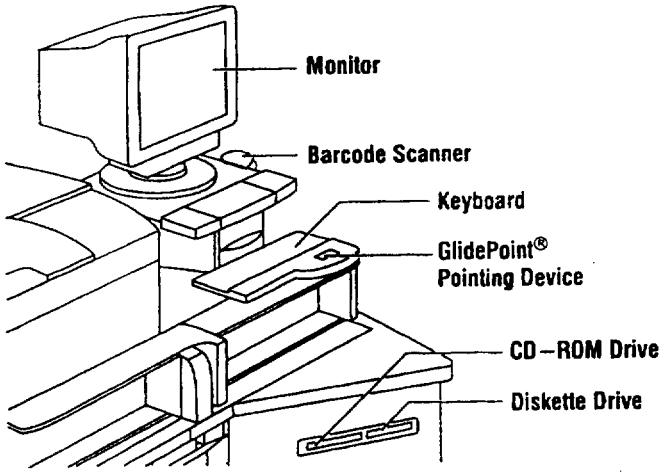

The workstation hardware includes the following components:

- GlidePoint® pointing device
- Barcode scanner
- Keyboard
- Monitor

GlidePoint Pointing Device

Use the GlidePoint pointing device to move the pointer on the screen and select workspace buttons, menu items, or window elements, and then enter information or select options.

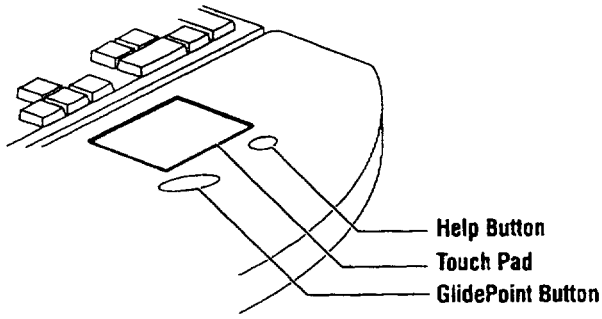

989

68 69

The GlidePoint pointing device is designed for biosafety. You can wear gloves while using the pointing device. The GlidePoint surface is resistant to spills and is easy to clean using standard laboratory disinfectants.

To move the pointer on the screen, slide your finger across the surface of the touch pad. To make a selection, move the pointer to the item and then press and release the GlidePoint button. To access online help, place the pointer over a field or a button and press the help (?) button.

If you want to . . .	*Then . . .*
select an item in a drop-down list	1. Move the pointer to the down arrow next to the field. 2. Press and release the GlidePoint button. The list of options opens. 3. Move the pointer to an option. 4. Press and release the GlidePoint button.
select an item in a table in order to perform a task	1. Move the pointer to an item in the table. 2. Press and release the GlidePoint button.
select an option	1. Move the pointer to the square or diamond next to an option. 2. Press and release the GlidePoint button.
enter information into a field	1. Move the pointer to a field. 2. Press and release the GlidePoint button. 3. Type the information into the field.

~~1~~99

69

Barcode Scanner

You can use the hand-held barcode scanner to enter barcoded information, such as the information on Master Curve cards or reagent packs.

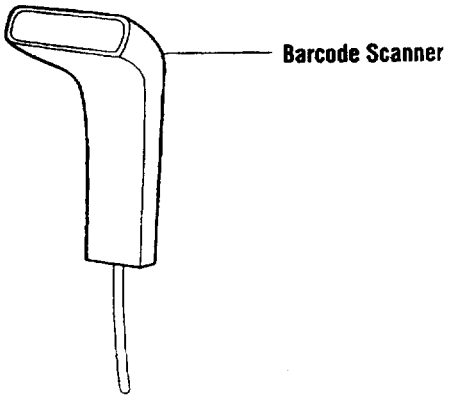

Keyboard

You can use the keyboard to enter text and to make selections.

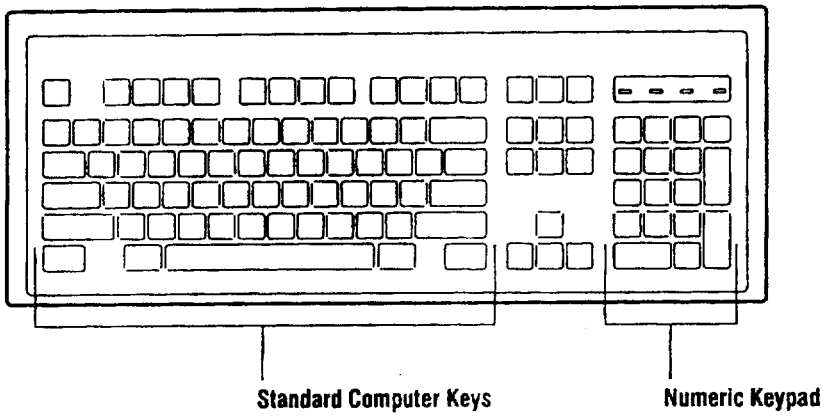

Monitor

The monitor is located on a flexible arm that moves to the optimum location for viewing.

100

70 101

The monitor displays the workspace, which allows access to windowing-type software to operate the system.

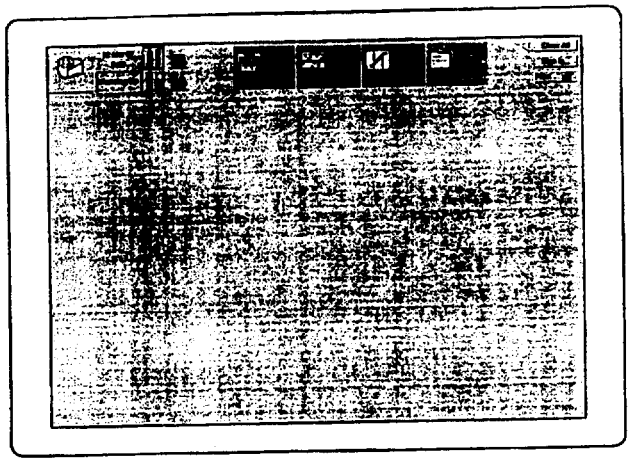

The workspace, which is always visible on the monitor, provides immediate access to all information that an operator requires to analyze samples, maintain the system, and track data. Refer to *Workspace*, page 3-7, for detailed information about the workspace and how to interact with the software.

Workspace

The workspace provides access to all system functions and information that an operator requires to operate the system. The workspace is similar to a benchtop. At a benchtop, you can pull several reports (windows) from different files (workspace buttons), and spread them out to review or to enter information. Although you can work on only one document at a time (active window), the others are ready for you. You can return the report to the file (close the window) or you can leave the report on the benchtop (leave the window open).

The workspace buttons are grouped into three areas: status buttons, task buttons, and function buttons.

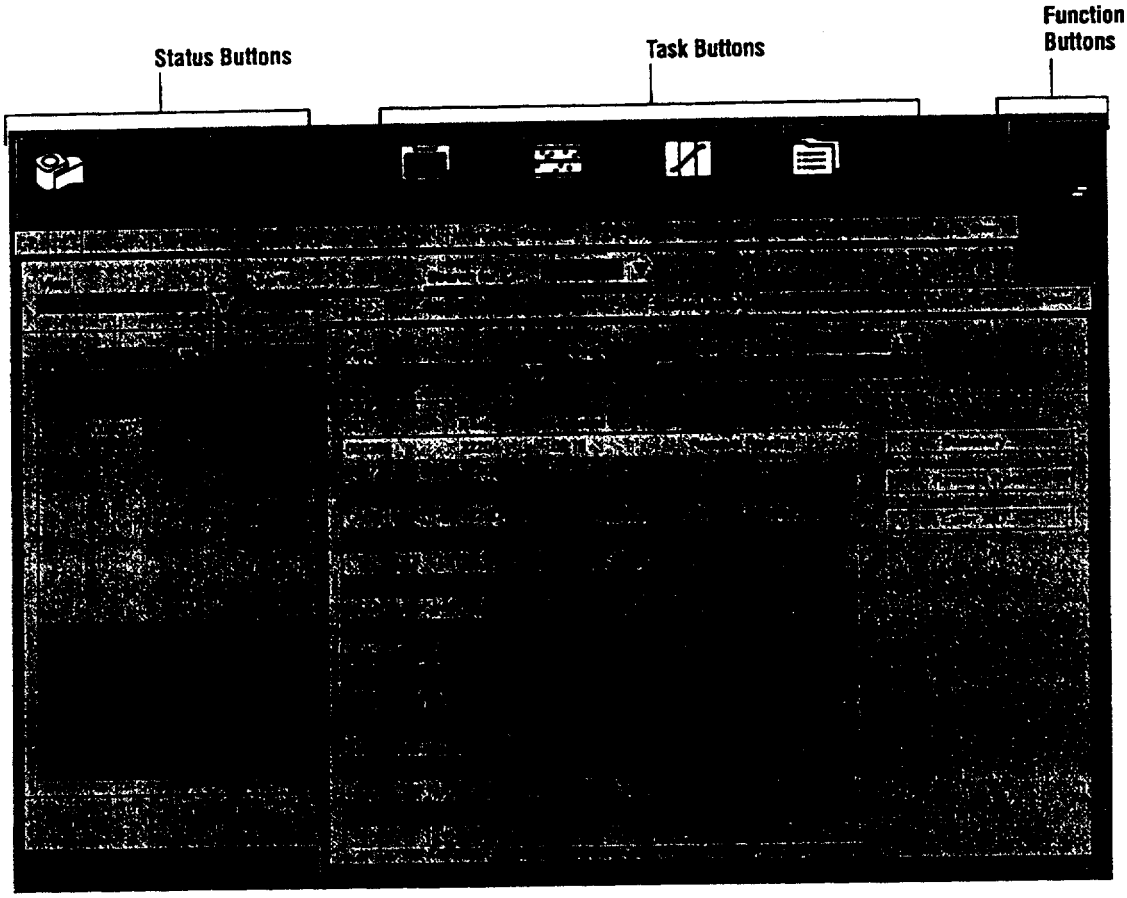

Refer to *Interacting with the Windows*, page xx, for information on moving, opening, and closing windows, and on selecting and entering data.

102

Status Buttons

The status buttons open windows that provide information on the condition of the entire system and of specific system areas.

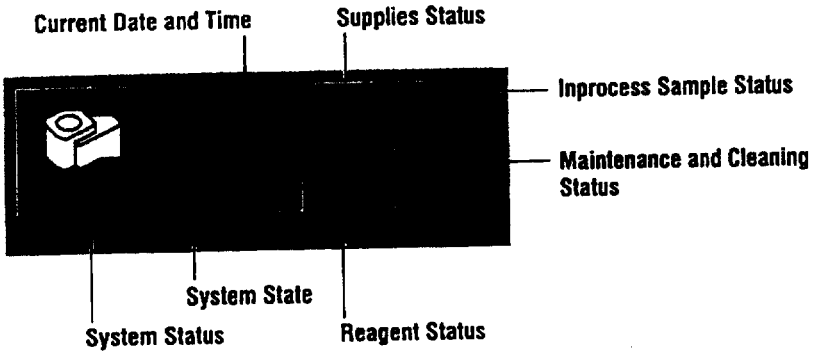

System Status	Accesses system status, event log, diagnostic tools, and information about the system.
Date and Time	Provides the current date and time.
System State	Provides information about the current state of the system.
Supplies Status	Provides information about sample tip and cuvette supplies, and system fluid and waste levels.
Inprocess Sample Status	Provides information about the status of the inprocess samples, such as when the result is due, insufficient sample volume, no request, and other messages.
Maintenance and Cleaning Status	Accesses the maintenance and cleaning schedule, log, and procedures.
Reagent Status	Provides information about onboard primary and ancillary reagents. Allows you to enter reagent data, activate reagent packs, or inactivate reagent packs.

The background color of the status buttons changes from grey to yellow or red to indicate that a system area requires attention:

- Yellow indicates that a warning condition exists, such as a low supply.
- Red indicates that a failure condition exists, such as an empty supply, that may cause the system to stop aspirating or processing samples.

Task Buttons

The task buttons provide access to windows associated with specific tasks. When selected, each button displays a list of the most frequently used windows in that area.

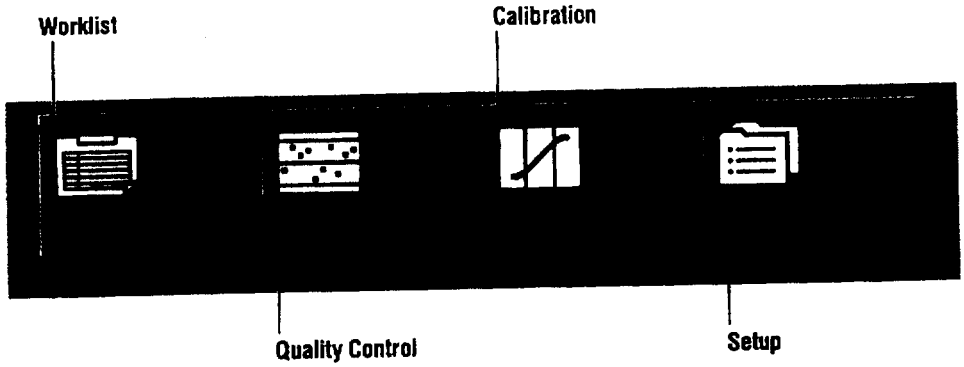

Worklist	This button accesses tasks associated with analyzing samples and reporting results such as scheduling samples, performing dilutions, and reviewing results.
Quality Control	This button accesses quality control tasks such as defining controls, defining rules, Levey-Jennings charts, and reviewing results.
Calibration	This button accesses calibration tasks such as status of current calibrations, defining Master Curves, defining calibrators, and reviewing calibration results.
Setup	This button accesses setup tasks such as reference ranges, dilutions, reflex tests, profiles, and data administration.

Function Buttons

The function buttons provide additional capabilities related to the workspace such as closing all windows, accessing system security, and requesting printed reports.

Select Close All to close all open windows.

Select Sign In to enter your initials and a password.

Select Print to access a menu of reports available fc. printing.

104

Window Components

Window Structure

On the workspace, related information and tasks are grouped in windows. The windows are designed with a common organization. Since the purpose of each window is unique, the organization of each window may vary to best achieve the objective of each window.

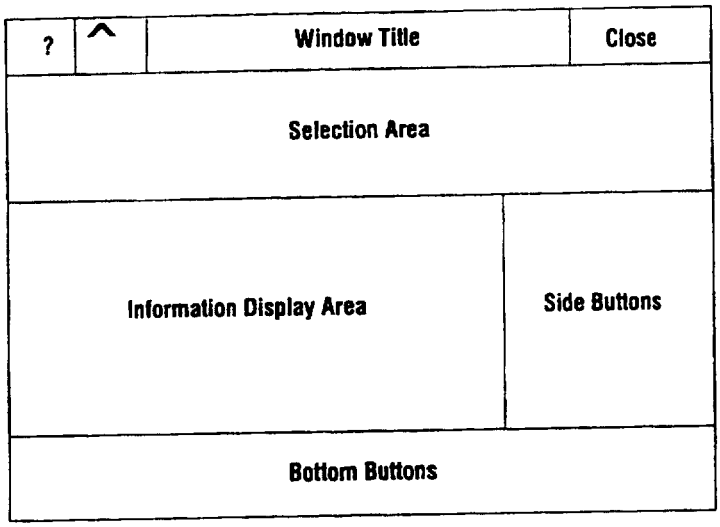

?	Select this symbol to access window help.
^	Select this symbol to move the window behind other windows.
Window Title	This title indicates the task area and the name of the specific window (for example, Worklist– Summary).
Close	Select this symbol to close the window.
Selection Area	The fields within the selection area control the information that is displayed in the window and the order of information display.
Information Display Area	This area displays the selected information.
Side Buttons	These buttons perform actions or open windows that provide more information about the selected information in the display area.
Bottom Buttons	These buttons act on all information displayed or open additional windows.

Window Elements

Window elements are the components on the windows that enable you to make selections and interact with the windows.

105

Interacting with the Windows

You can open a window from the workspace task buttons, the workspace status symbols, or from another window.

If you want to . . .	*Then . . .*
open a window from a task button	1. At the workspace, move the pointer to a task button. 2. Press and release the GlidePoint button. The drop-down list of window titles opens. 3. Move the pointer to a window title. 4. Press and release the GlidePoint button.
open a status window from a workspace status button	1. At the workspace, move the pointer to a status button. 2. Press and release the GlidePoint button.
open a window containing related information from another window	1. Select an item in a table. 2. Move the pointer to a button with an ellipsis (...). 3. Press and release the GlidePoint button. The new window displays information related to the item selected in the previous window.
open a window from another window	1. Move the pointer to a button with an ellipsis (...). 2. Press and release the GlidePoint button. The new window displays related information entered in the previous window.
close one window	1. Move the pointer to the close symbol in the upper right corner of the window. 2. Press and release the GlidePoint button.
close all the windows at once	1. Move the pointer to the Close All button in the upper right corner of the workspace. 2. Press and release the GlidePoint button.

Online Information

The system provides online help and procedures to answer your questions about operating and maintaining the system, and correcting system problems. Information and procedures are provided for windows, and more specific information is provided for individual window elements such as buttons, fields, and tables. Online procedures are available for scheduled maintenance activities and event codes.

Windows

Window help provides operating procedures for options available at each window and brief instructions for using the window. To access help on a window, place the pointer on the ? button in the title bar and then press the GlidePoint button.

Fields and Buttons

Field help provides information and brief procedures for every field and button on a window. To access help on a field or button, place the pointer on the field or the button and then press the ? button on the GlidePoint® pointing device or the ? key on the keyboard.

Maintenance Activities

Maintenance activity information provides a brief procedure on how to perform the maintenance. To access information about a maintenance activity, select a maintenance activity in the Maintenance Log and then select the Procedure button. Refer to *Maintenance* in Section 7 for detailed maintenance information.

Event Codes

Event code information provides brief descriptions and procedures for isolating and solving system events. To access information about an event code, select the event code in the event log, and then select the Procedure button. When the online information window opens, select simple search from the search menu, and enter the event code for which you want information. Refer to *Troubleshooting* in Section 8 for detailed troubleshooting information.

4 Operating the System

Introduction **4-3**
Manually Entering Requests at a Stand-alone System 4-3
Manually Receiving Requests from the LIS 4-4
LIS Integrated with Dynamic Download 4-5
LIS Integrated with Host Query 4-7

Loading Sample Racks **4-9**
Loading Stat Samples 4-10

Replenishing Reagents **4-12**
Reviewing Reagent Inventory 4-12
Reviewing Reagent Status 4-12
Reviewing Primary Reagent Status 4-13
Adding Primary Reagent Packs 4-14
Reviewing Ancillary Reagent Status 4-14
Adding Ancillary Reagent Packs 4-15

Replenishing Supplies **4-16**
Reviewing Supplies Status 4-16
Preparing the Water and Waste Bottles 4-17
Adding Cuvettes 4-19
Adding Sample Tips 4-20
Emptying the Waste Bins 4-21
Replacing the System Fluids 4-24

Reviewing Inprocess Samples **4-26**

Modifying the Worklist **4-28**
Reviewing the Worklist Summary 4-28
Querying an LIS 4-29
Adding Patient Requests 4-29
Entering Patient Demographics 4-30

Adding Stat Requests 4-31
Adding Batch Requests 4-31
Adding Calibrator Requests 4-32
Adding Control Requests 4-33
Entering Dilution Options 4-34
Entering Reagent Options 4-35
Editing Requests 4-36
Editing Batch Requests 4-36
Deleting Requests 4-37

Evaluating the Results **4-38**
Reviewing Results 4-38
Repeating a Test 4-39
Editing Results 4-39
Sending Results to an LIS 4-40
Printing Sample Results 4-40
Deleting Selected Sample Results 4-41
Deleting Worklist Results 4-42

Maintaining Data Files **4-43**
Archiving Results 4-43
Restoring Archived Results 4-44

109

79 110

Introduction

The ACS:Centaur system is a continuous operation system that accommodates many laboratory environments and workflow styles. As a result of this flexibility, you can perform tasks in the order that meets your needs.

For ease of use, the operating procedures in this section are arranged according to the following operating scenarios:

- Manually entering requests at a stand-alone system
- Manually receiving requests from the LIS
- LIS integrated with dynamic download
- LIS integrated with host query

Manually Entering Requests at a Stand-alone System

If the ACS:Centaur system is not connected to an LIS or HIS, you need to perform the following required procedures:

- Scheduling samples
- Loading the sample racks

You may also need to perform some of the following optional procedures:

- Scheduling and loading stats
- Modifying the worklist
- Reviewing inprocess samples
- Reviewing the reagent inventory
- Checking status
- Replenishing supplies
- Printing sample results
- Maintaining data files

You can use the following suggested operating procedure.

1. At the **Worklist–Schedule** window, schedule the requests.
2. At the Worklist–Summary window, review the worklist.

   If you want to view the worklist as you create it, open the Worklist–Summary window and select Summary at the Worklist–Schedule window if you want to view new requests on the worklist.
3. Check the supplies:

110

a. Visually verify that the cuvettes, sample tips, water, and system fluids are sufficient.

b. Visually verify that the space for solid and fluid waste is sufficient.

c. At the Worklist–Reagent Inventory window, visually verify that the reagent is sufficient for the number of requested tests.

   Load additional reagents if required, and then verify that the system reads the barcode. View the status of a primary pack at the Status–Primary Reagent window, or view the status of an ancillary pack at the Status–Ancillary Reagent window.

4. Load the samples in racks and load the racks in the sample entry queue.

5. At the Status–Samples window, verify that the system reads the barcodes.

   If the system cannot read the barcodes, enter the SID.

6. At the Worklist–Summary window, sort by Scanned and select Time Due at the Results column to track the progress of samples.

7. During operation, observe the system workspace for symbols that turn yellow or red.

   If you see symbols that turn yellow or red, check the status.

8. Remove the racks from the sample exit queue and load additional racks as required.

9. Review the results and release On Hold results, if required.

10. Print reports, if required.

Manually Receiving Requests from the LIS

If the ACS:Centaur system manually receives requests from an LIS or HIS, you need to perform the following required procedure:

- Loading the sample racks

You may also need to perform some of the following optional procedures:

- Scheduling and loading stats
- Modifying the worklist
- Reviewing inprocess samples
- Reviewing the reagent inventory
- Checking status
- Replenishing supplies
- Printing sample results
- Maintaining data files

111

81 112

You can use the following suggested operating procedure.

1. At the Worklist–LIS Communications window, download the requests from the LIS.
2. At the Worklist–Summary window, review the worklist.

   If you want to view the worklist as you create it, open the Worklist–Summary window and select Summary at the Worklist–Schedule window if you want to view new requests on the worklist.
3. Check the supplies:
   a. Visually verify that the cuvettes, sample tips, water, and system fluids are sufficient.
   b. Visually verify that the space for solid and fluid waste is sufficient.
   c. At the Worklist–Reagent Inventory window, visually verify that the reagent is sufficient for the number of requested tests.

      Load additional reagents if required, and then verify that the system reads the barcode. View the status of a primary pack at the Status–Primary Reagent window, or view the status of an ancillary pack at the Status–Ancillary Reagent window.
4. Load the samples in racks and load the racks in the sample entry queue.
5. At the Status–Samples window, verify that the system reads the barcodes.

   If the system cannot read the barcodes, enter the SID.
6. At the Worklist–Summary window, sort by Scanned and select Time Due at the Results column to track the progress of samples.
7. During operation, observe the system workspace for symbols that turn yellow or red.

   If you see symbols that turn yellow or red, check the status.
8. Remove the racks from the sample exit queue and load additional racks as required.
9. Review the results and release On Hold results, if required.
10. At the Worklist–LIS Communications window, send the results to the LIS.

LIS Integrated with Dynamic Download

If the ACS:Centaur system is connected to an LIS or HIS and uses dynamic downloading, you need to perform the following required procedure:

- Loading the sample racks

You may also need to perform some of the following optional procedures:

- Loading Stats

112

- Scheduling samples
- Querying an LIS
- Modifying the worklist
- Reviewing inprocess samples
- Reviewing the reagent inventory
- Checking status
- Replenishing supplies
- Sending results to an LIS
- Maintaining data files

You can use the following suggested operating procedure.

1. At the Worklist–Summary window, review the worklist.

   If you want to view the worklist as you create it, open the Worklist–Summary window and select Summary at the Worklist–Schedule window if you want to view new requests on the worklist.

2. Check the supplies:
   a. Visually verify that the cuvettes, sample tips, water, and system fluids are sufficient.
   b. Visually verify that the space for solid and fluid waste is sufficient.
   c. At the Worklist–Reagent Inventory window, visually verify that the reagent is sufficient for the number of requested tests.

      Load additional reagents if required, and then verify that the system reads the barcode. View the status of a primary pack at the Status–Primary Reagent window, or view the status of an ancillary pack at the Status–Ancillary Reagent window.

3. Load the samples in racks and load the racks in the sample entry queue.
4. At the Status–Samples window, verify that the system reads the barcodes.

   If the system cannot read the barcodes, enter the SID.

5. At the Worklist–Summary window, sort by Scanned and select Time Due at the Results column to track the progress of samples.
6. During operation, observe the system workspace for symbols that turn yellow or red.

   If you see symbols that turn yellow or red, check the status.

7. Remove the racks from the sample exit queue and load additional racks as required.
8. Review the results and release On Hold results, if required.

113

LIS Integrated with Host Query

If the ACS:Centaur system is connected to an LIS or HIS, and you can use host query, you need to perform the following required procedures:

- Loading the Sample Racks
- Querying an LIS

You may also need to perform some of the following optional procedures:

- Loading Stats
- Scheduling samples
- Modifying the worklist
- Reviewing inprocess samples
- Reviewing the reagent inventory
- Checking status
- Replenishing supplies
- Sending results to an LIS
- Maintaining data files

You can use the following suggested operating procedure.

1. Check the supplies:
   a. Visually verify that the cuvettes, sample tips, water, and system fluids are sufficient.
   b. Visually verify that the space for solid and fluid waste is sufficient.
   c. At the Worklist–Reagent Inventory window, visually verify that the reagent is sufficient for the number of requested tests.

      Load additional reagents if required, and then verify that the system reads the barcode. View the status of a primary pack at the Status–Primary Reagent window, or view the status of an ancillary pack at the Status–Ancillary Reagent window.
2. Load the samples in racks and load the racks in the sample entry queue.
3. At the Status–Samples window, verify that the system reads the barcodes.

   If the system cannot read the barcodes, enter the SID.
4. At the Worklist–Summary window, sort by Scanned and select Time Due at the Results column to track the progress of samples.
5. During operation, observe the system workspace for symbols that turn yellow or red.

   If you see symbols that turn yellow or red, check the status.

6. Remove the racks from the sample exit queue and load additional racks as required.
7. Review the results and release On Hold results, if required.

115

Loading Sample Racks

Refer to the assay product inserts for the volume of calibrators, controls, and patient samples required for each test.

BIOHAZARD: Refer to Appendix A, *Protecting Yourself from Biohazards*, for recommended precautions when working with biohazardous materials.

CAUTION: To avoid breakage of primary sample tubes, refer to Appendix F, *Specifications*, for acceptable sizes of primary sample tubes. At the Setup–Summary window, you can select **Barcode & Tube Type** to display the four sizes of sample tubes or sample cups that you selected to run on the system.

NOTE: The barcode should adhere completely to the tube or sample cup. Placing more than two barcode labels on a primary sample tube can make the tube diameter too wide to fit in the rack. If a primary sample tube has more than two barcode labels, transfer the specimen to an appropriately labeled sample cup.

1. If you use sample cups:
   a. Label sample cups with the appropriate calibrator, control, or patient sample barcode labels.

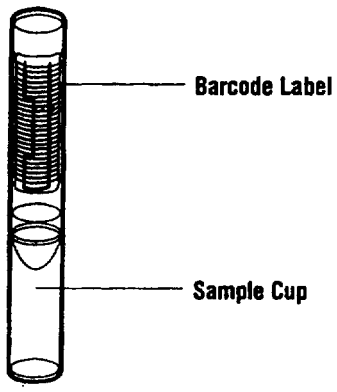

   b. Dispense the appropriate volume of sample into the labeled sample cups.

CAUTION: The rack must contain only one size of sample cup or tube. The rack indicator must be positioned at the correct setting for the size of sample cup or tube.

2. Load each sample container into the rack.

116

86 117

Ensure that the barcode label on the sample cup is clearly visible through the slot in the rack.

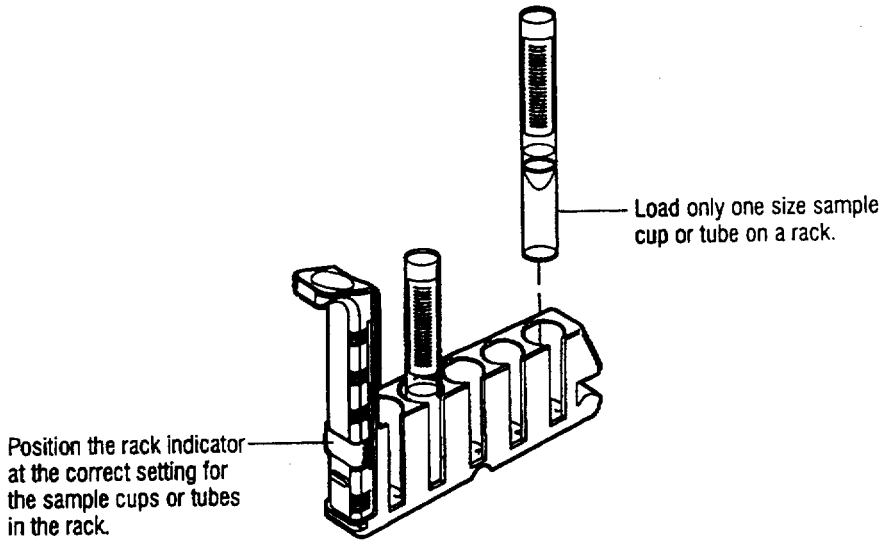

3. Load the rack in the sample entry queue, ensuring that the rack fits securely.

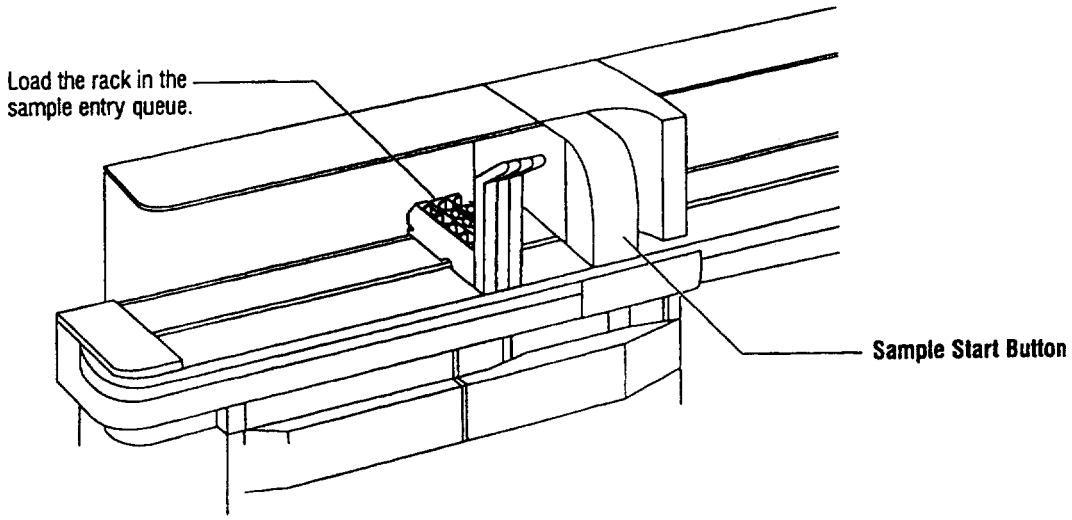

4. If the sample start button is off, press the button.
   The system moves the racks to the inprocess queue.
5. When testing completes, remove the racks from the sample exit queue.

Loading Stat Samples

Use this procedure to load Stat samples while the system processes the worklist.

1. If you are using the ACS:Centaur workstation to schedule tests manually, schedule the Stat sample as described in *Scheduling Patient Samples*, page 4-29.
2. Load the sample tube or cup in a rack.

   NOTE: All samples in the rack are performed at Stat priority.
3. Load the rack into the Stat entry.

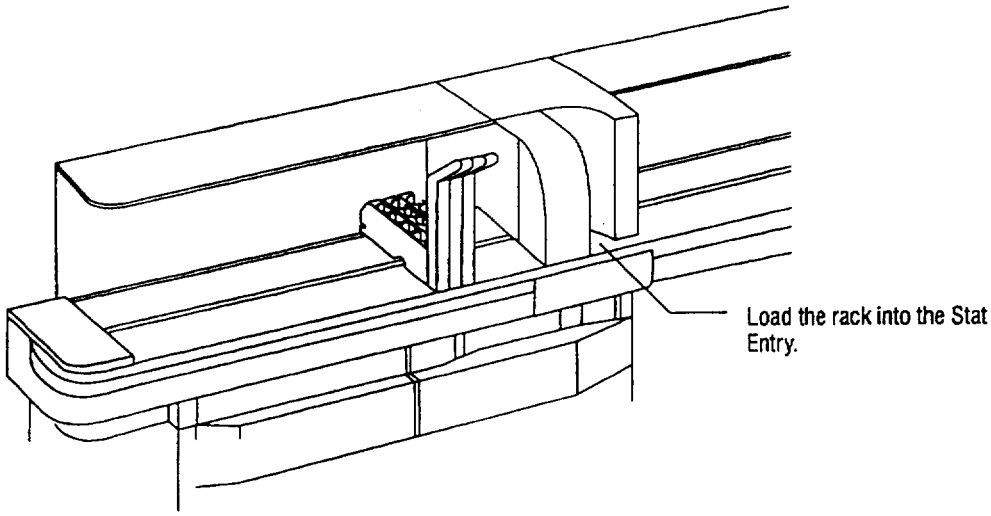

118

Replenishing Reagents

Reviewing Reagent Inventory

The reagent inventory allows you to determine if sufficient primary reagents and ancillary reagents are loaded to complete the scheduled tests. The number of scheduled tests and any reagent shortage are indicated on the Worklist–Reagent Inventory window.

Based on the inventory information, you can replace empty reagent or diluent packs, and add additional reagent or diluent packs. Based on the status messages, you can take corrective action.

1. At the workspace, select **Worklist**.
2. Select **Reagent Inventory**.

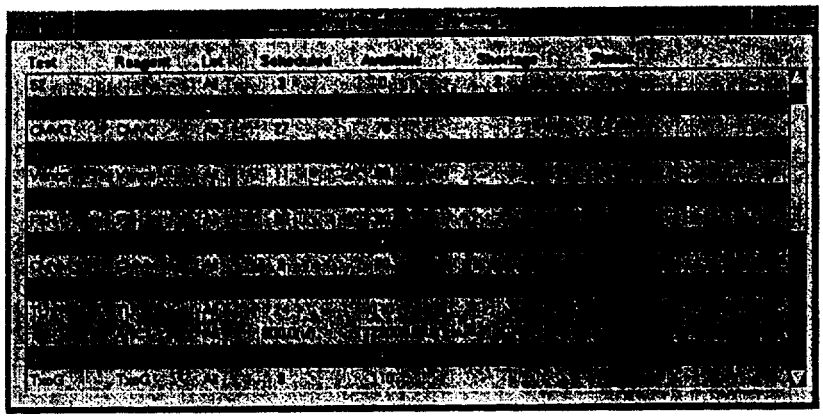

3. Verify that the system has the required reagents to complete the scheduled tests:
   - number of tests on the system for primary packs
   - volume for ancillary reagents

Reviewing Reagent Status

Reagent status displays the status of both primary and ancillary reagents.

- If you select this button and there is a warning condition associated with a primary reagent, the Status–Primary Reagent window is displayed.
- If you select this button and there is a warning condition associated with an ancillary reagent, the Status–Ancillary Reagent window is displayed.
- If you select this button and there is a condition associated with the primary and ancillary reagents, both windows appear on the workspace.

119

Reviewing Primary Reagent Status

At the Status–Primary Reagent window you can perform the following activities:

- review LEDs associated with each primary reagent
- access the Status–Details window, which shows the reagent, tests, and status associated with a primary pack
- activate or inactivate a primary pack
- remove a pack from the system
- schedule a calibration for any lot of the selected test that is in the notification interval
- activate or inactivate a test
- open the Reagent Inventory window
- open the Ancillary Reagent window

1. At the workspace, select **Reagent Status**.

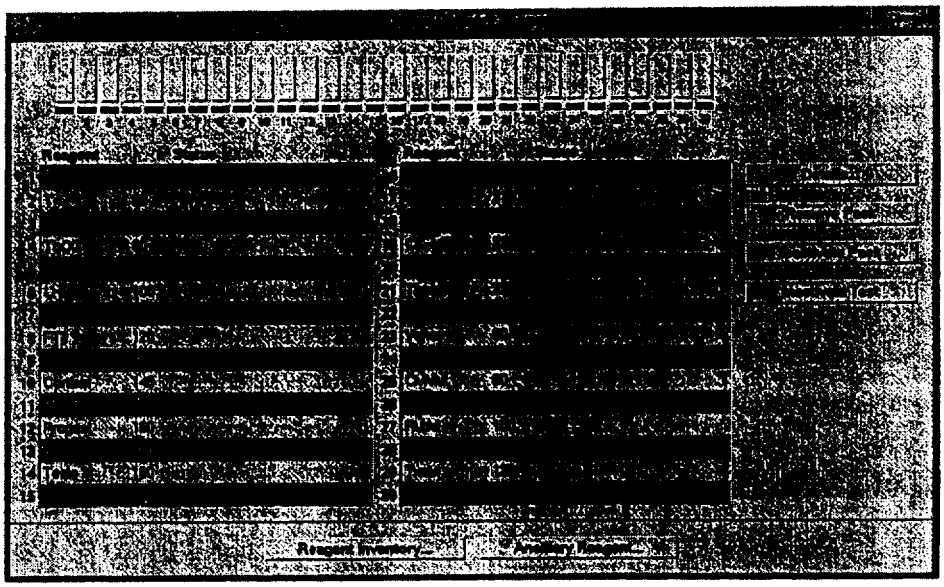

2. Review the reagent status and perform tasks as needed:
   - red indicates that the reagent requires immediate attention
   - yellow indicates that the reagent is currently sufficient but will need attention soon

? 3. You can select the online information button or refer to *Adding Primary Reagent Packs*, page 4-14, for detailed procedures.

120

90 121

Adding Primary Reagent Packs

1. At the workspace, select **Reagent Status**.

   NOTE: If the Status–Ancillary Reagents window appears, select **Primary Reagent** to display the status of the primary reagent packs.

2. Review the status of each reagent pack.
3. Open the primary reagent door.
4. If no position is open, or if the LED for the pack that you want to remove is lit, remove a primary pack.

If the system is . . .	*Then . . .*
idle	remove the reagent pack.
operating	a. At the Status–Primary Reagent window, select the reagent pack. b. Select **Remove Pack.** c. Select **Complete** or select **Now.** d. When the status changes to Removable, remove the reagent pack.

5. Install the primary reagent packs.

   NOTE: For optimal throughput, install packs of similar types next to one another.

6. Close the primary reagent door.
7. You can schedule a calibration:
   a. At the Status–Primary Reagent window, select the reagent pack.
   b. Select **Schedule Cal.**

   The system automatically schedules a calibration.

Reviewing Ancillary Reagent Status

At the Status–Ancillary Reagent window you can perform the following activities:

- display the status of the ancillary reagent entry
- access the Status–Ancillary Pack Details window, which shows the reagent, volume, and status associated with an ancillary reagent
- access the Status–Reagent Inventory window and the Status–Primary Reagent window
- remove an ancillary pack from the system

1. At the workspace, select **Reagent Status**.

127

91

2. Select **Ancillary Reagents.**

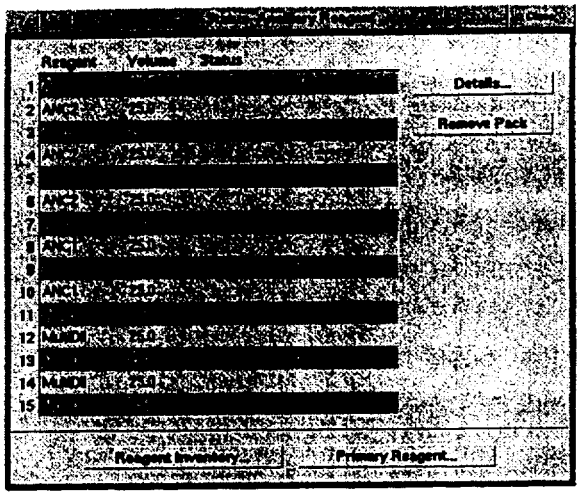

3. Review the reagent status and perform tasks as needed:
   - red indicates that the reagent requires immediate attention
   - yellow indicates that the reagent is currently sufficient but will need attention soon

? 4. You can select the online information button or refer to *Adding Ancillary Reagent Packs*, page 4-15, for detailed procedures.

Adding Ancillary Reagent Packs

1. At the workspace, select **Reagent Status.**
2. If the Status–Primary Reagent window opens, select **Ancillary Reagent.**
3. Determine if you need to replace a pack.
4. If no position is open, remove a pack:
   a. Select a pack.
   b. Select **Remove Pack.**
   c. If prompted, select **Complete** or select **Now.**
   d. Remove the pack from the ancillary reagent entry.
5. Install the appropriate pack in the ancillary reagent entry.

122

Replenishing Supplies

Reviewing Supplies Status

The background of the Supplies status button changes color to indicate the status of system supplies:

- yellow indicates that a supply requires attention
- red indicates that a supply is empty

You can select the Supplies button from the workspace to display the Status–Supplies window.

1. At the workspace, select **Supplies Status**.

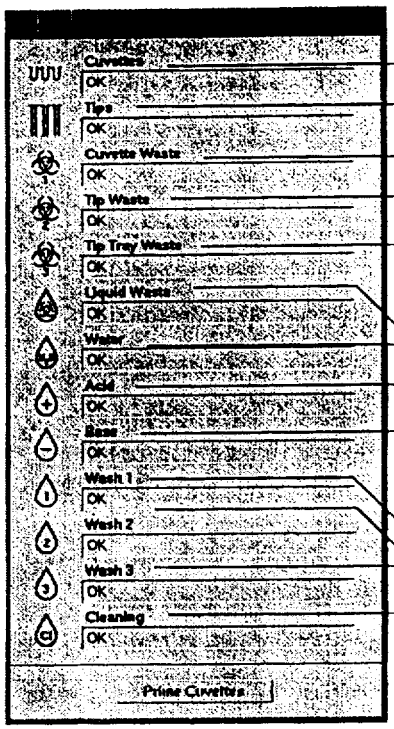

2. Review the supplies status:
   - yellow indicates that a supply requires attention
   - red indicates that a supply is empty
3. Visually inspect the levels of cuvettes, sample tips, and water. and
4. Empty the cuvette waste, the tip waste, and the liquid waste containers.
5. ? You can select the online information button or refer to Section 7, *Maintenance*, for detailed procedures.

123

93

Preparing the Water and Waste Bottles

Use this procedure to fill the water bottle and empty the waste bottle. You can perform this procedure while the system is analyzing samples.

BIOHAZARD: Refer to Appendix A, *Protecting Yourself from Biohazards*, for recommended precautions when working with biohazardous materials.

NOTE: For optimum system performance use fresh reagent water. Refer to Appendix E, *Reagents and Water Quality*.

1. Remove the water bottle:
   a. Pull out the waste and water drawer.
   b. Lift the lid above the water bottle.
   c. Disconnect the tubing from the top of the water bottle.
   d. Grasp the handle of the bottle and lift it up and out.

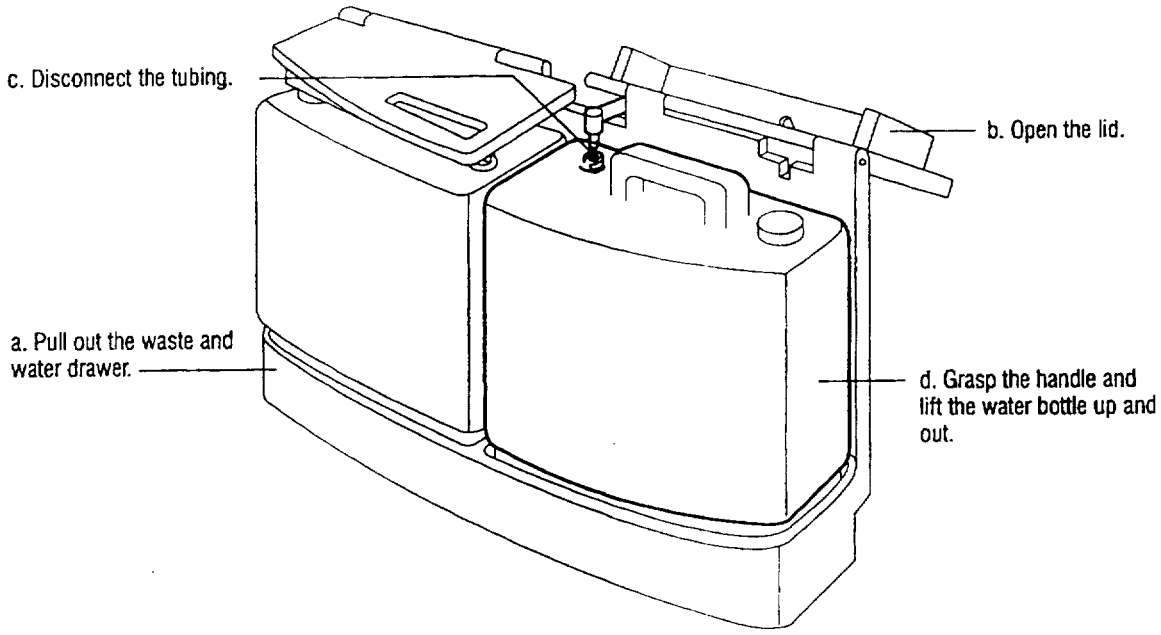

2. Prepare to clean the water bottle:
   a. Remove the cap from the top of the water bottle.
   b. Empty any remaining water from the water bottle.
   c. Clean the water bottle as described in *Cleaning the Water Bottle* in Section 7.
3. Fill a clean, dry water bottle with fresh reagent water.
4. Install the cap.
5. Install the water bottle on the system:

124

a. Return the bottle to the drawer.

b. Connect the tubing to the bottle.

c. Lower the lid.

6. Remove the waste bottle:

a. Lift the waste bottle lid.

CAUTION: To prevent dripping of biohazardous waste into the system, set the tubing on tissues or gauze.

b. Disconnect the tubing from the top of the waste bottle and then set it aside on tissues or gauze.

CAUTION: Handle the sensors gently because they are fragile.

c. Move the S clamp on the sensor aside, carefully remove the sensor from the bottle, and then set it aside on tissues or gauze.

Remove the waste bottle slowly to prevent splashing.

d. Grasp the handle of the bottle and lift it up and out.

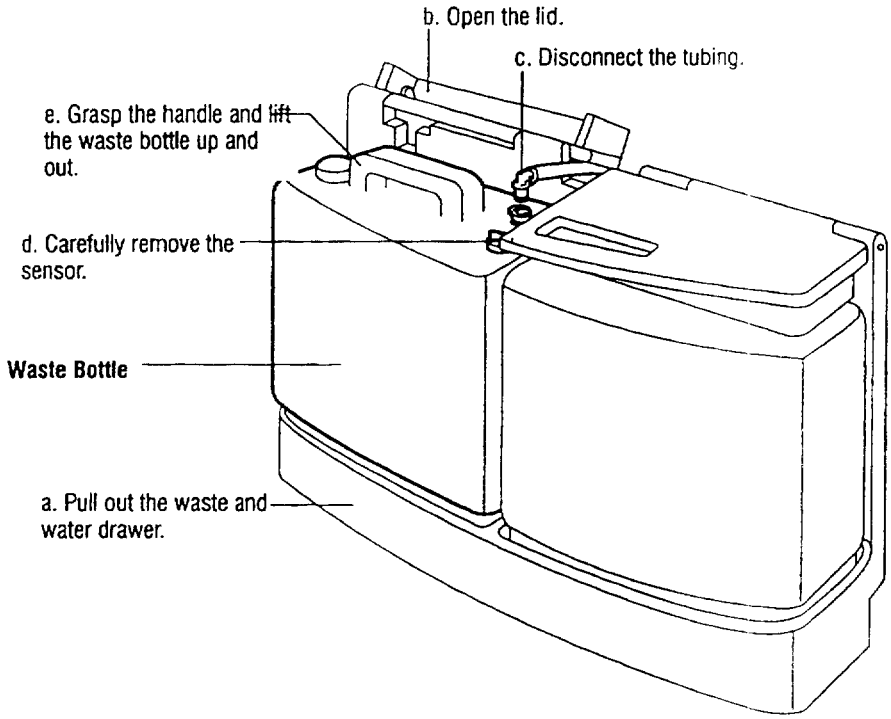

7. Empty the contents of the waste bottle into a container or drain approved for biohazardous waste disposal.

CAUTION: To prevent splashing of biohazardous waste, use the waste bottle valve to empty the contents of the waste bottle. Do not pour the contents from the top of the bottle.

125

8. If required, clean the waste bottle as described in *Monthly Cleaning Procedure* in Section 7.

CAUTION: To prevent a spill in the waste and water drawer, ensure that the waste bottle valve is fully closed by turning it to the left.

9. Install the waste bottle on the system:
   a. Close the waste bottle valve.
   b. Install the waste bottle in the drawer.
10. Clean the waste bottle main sensor.

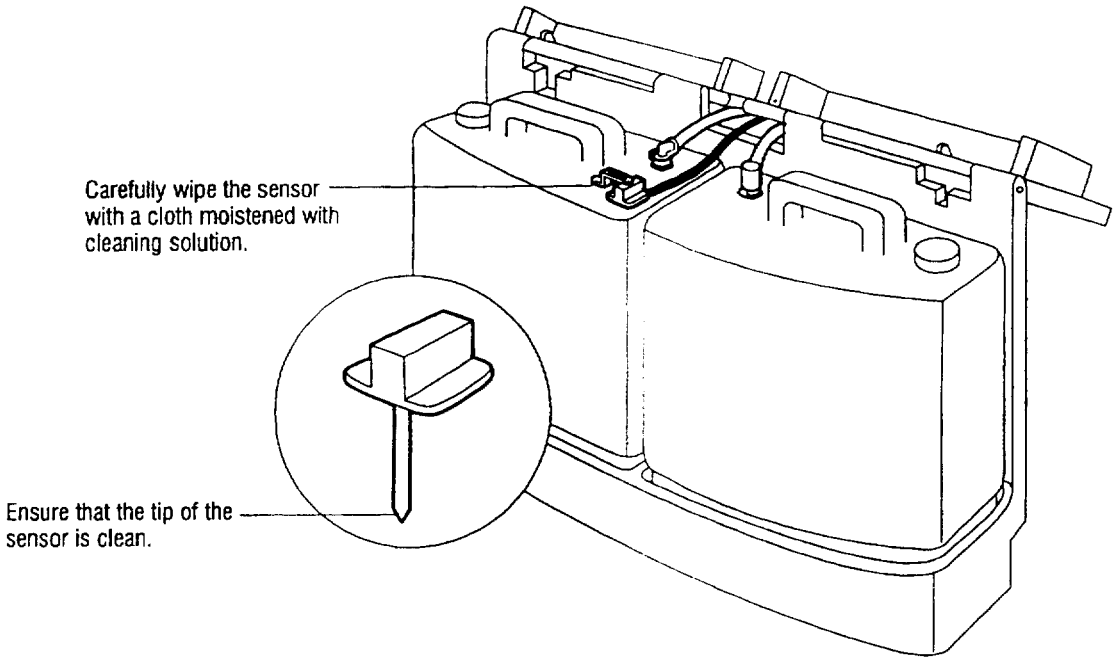

11. Carefully install the sensor in the waste bottle, and move the S clamp to cover the sensor.
12. Connect the tubing to the waste bottle.
13. Lower the lid.
14. Push in the waste and water drawer.

Adding Cuvettes

You can fill the cuvette loading bin at any time, even while the system is analyzing samples.

126

96

1. Open the cover.

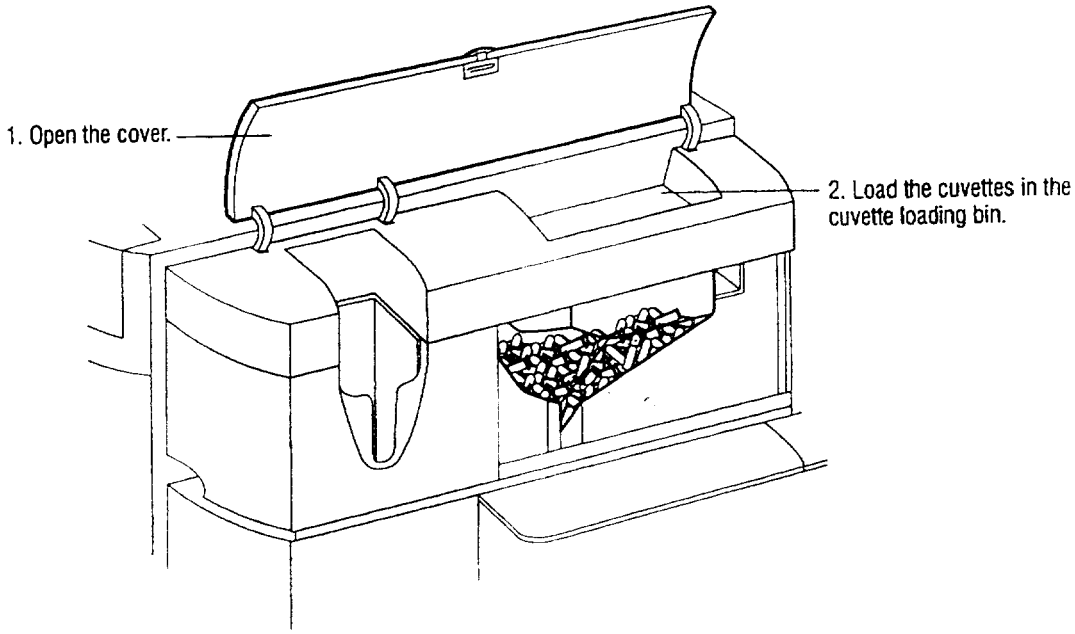

2. Load the cuvettes in the cuvette loading bin.

   You can load up to 4 bags of 250 cuvettes each. Avoid overfilling the cuvette loading bin.

3. Close the cover.

Adding Sample Tips

You can load sample tips at any time, even while the system is analyzing samples.

1. Open the cover.

127

2. Remove the protective cover from the bottom of the bundle.

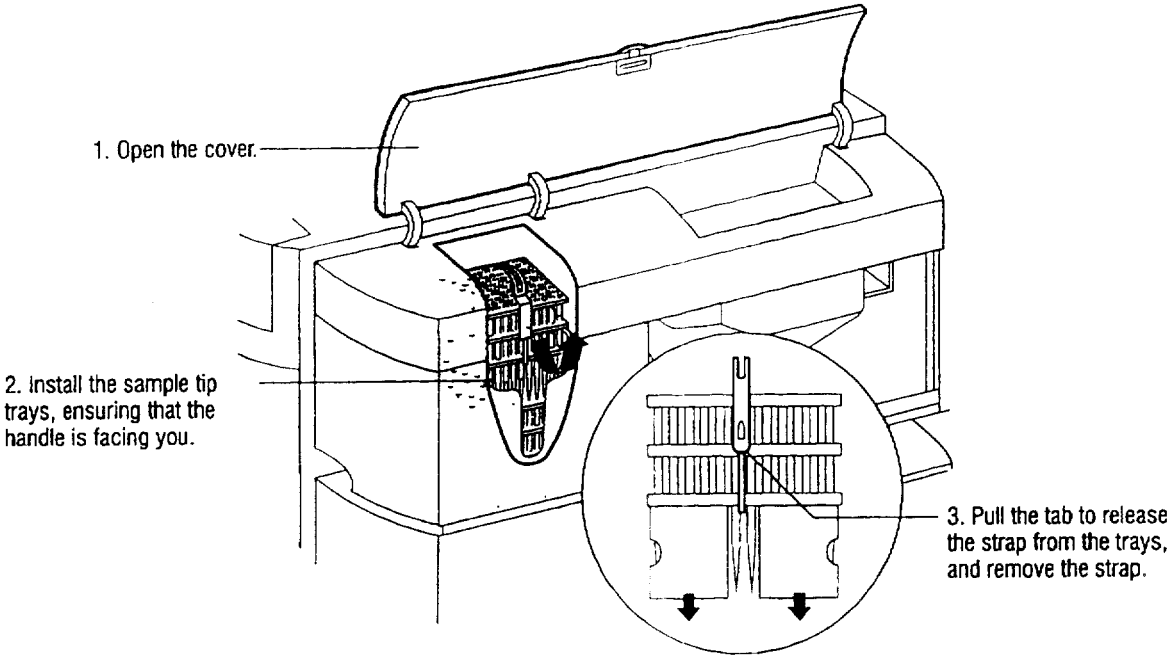

3. Install a bundle of sample tip trays, ensuring that the handle is facing you.
4. Pull the tab to release the strap from the trays, and remove the strap.
5. Close the cover.

Emptying the Waste Bins

You can empty the bins while the system is analyzing samples. Cuvettes and sample tips are collected in reservoirs while the bins are out of the system. The maximum capacity of the reservoirs is 20 cuvettes or tips, or approximately five minutes of operation.

BIOHAZARD: Refer to Appendix A, *Protecting Yourself from Biohazards*, for recommended precautions when working with biohazardous materials.

NOTE: The waste bins and liners are not identical. Ensure that the sample tip waste bin and liner are installed in the sample tip waste area. Ensure that the cuvette waste bin and liner are installed in the cuvette waste area.

1. Remove the sample tip waste bin:
   a. Open the right waste door.
   b. Grasp the handle of the sample tip waste bin and pull the bin out of the system.

128

2. Dispose of the contents of the bin in a container approved for biohazardous waste.
3. If the liner is dirty or damaged, remove the old liner and install a new liner.
4. If the bin is dirty, clean it:
   a. Pour a small amount of cleaning solution into the bin and swirl the solution inside the bin several times.
   b. Empty the waste bin into a container or drain approved for biohazardous waste.
   c. Repeat steps a and b.
   d. Rinse the inside and the outside of the bin with water.
   e. Dry the bin.
   f. Install the liner.
5. Install the waste bin, ensuring that the bin is pushed in completely.
6. Close the right waste door.
7. Remove the cuvette waste bin:
   a. Open the left waste door.

b. Grasp the handle of the cuvette waste bin and pull the bin out of the system.

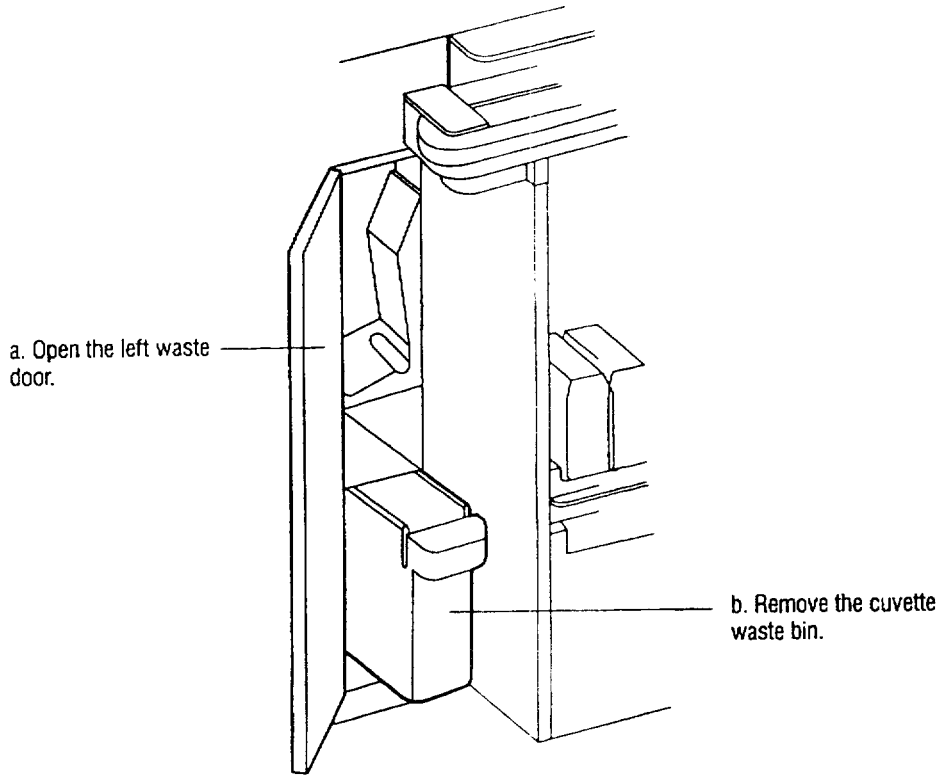

8. Dispose of the contents of the bin in a container approved for biohazardous waste.
9. If the liner is dirty or damaged, remove the old liner and install a new liner.
10. If the bin is dirty, clean it:
    a. Pour a small amount of cleaning solution into the bin and swirl the solution inside the bin several times.
    b. Empty the waste bin into a container or drain approved for biohazardous waste.
    c. Repeat steps a and b.
    d. Rinse the inside and the outside of the bin with water.
    e. Dry the bin.
    f. Install the liner.
11. Install the cuvette waste bin, ensuring that the bin is pushed in completely.
12. Close the left waste door.

130

Replacing the System Fluids

Use this procedure to replace acid reagent, base reagent, and wash 1, 2, and 3 after one month on the system, after expiration, or when they have insufficient volume. You can replace the system fluids while the system is analyzing samples. The system fluid reservoirs hold enough fluid to allow the system to continue to run for approximately 30 minutes.

NOTE: To manage lot numbers and to obtain optimum reagent performance, replace acid and base reagents at the same time.

1. Pull out the system fluid drawer.
2. Lift the lid for a system fluid bottle at the front edge.

CAUTION: Do not touch the tubing or allow it to touch the bottom of the drawer.

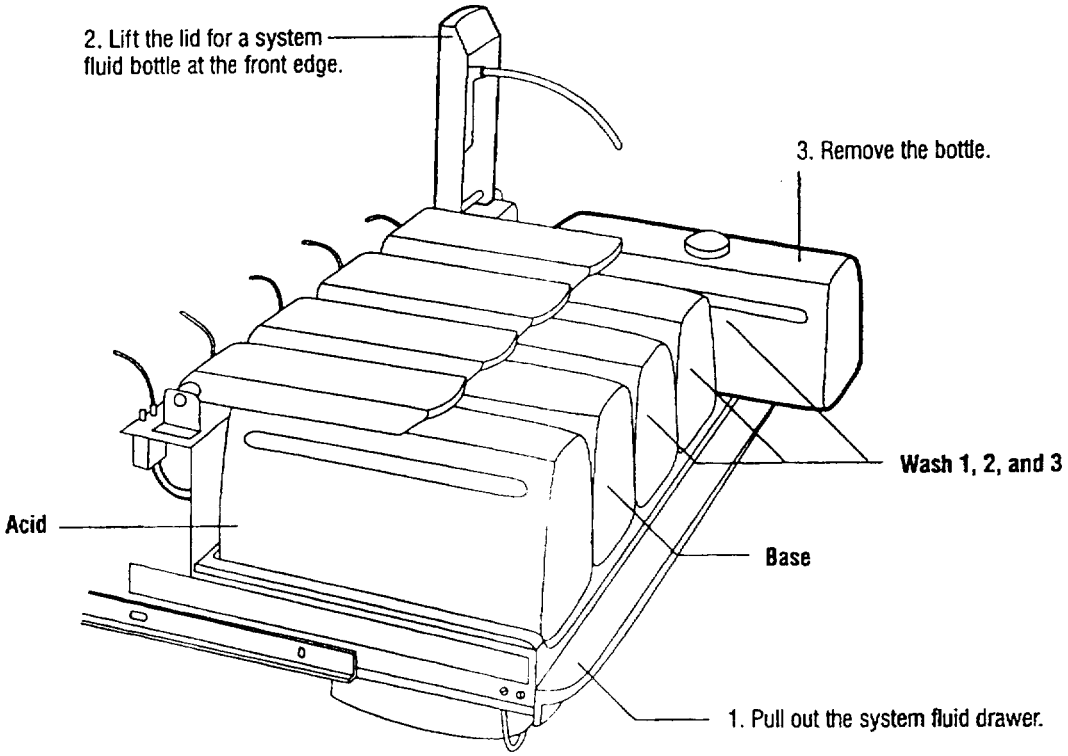

3. Remove the bottle and discard the fluid in an approved fluid waste container and the bottle in an approved solid waste container.

   NOTE: Do not pool any fluid from used bottles.
4. Write today's date in the space provided on the bottle.
5. Place the bottle in the drawer and remove the cap.

   Do not dislodge the tubing.

137

6. Wipe the tubing with lint-free tissues or gauze.
7. Lower the lid onto the bottle, ensuring that the tubing is in the bottle.
8. Repeat steps 2 through 7 for each bottle.

   NOTE: Ensure that the lid fits correctly on the bottle. If not, ensure that the system fluid bottle is in the correct location for the system fluid.
9. Push in the system fluid drawer.

132

Reviewing Inprocess Samples

Inprocess sample status shows the status of samples in the inprocess queue or in the incubation ring.

The background of the Inprocess Samples Status button changes to yellow when a sample does not have a barcode or an SID, or when there is insufficient sample. Pressing the Sample Status button displays the Status–Samples window. The sample causing the warning or error condition appears in the table on the window.

At the Status–Samples window you can perform the following activities:

- view all samples, exceptions, calibrators, status controls, or aspirated samples
- sort samples by time, rack, SID, status errors, or scanned date
- search for an SID
- search for rack
- review the status of the samples in the exit queue
- request to remove a rack from the system
- access the Demographics window, Schedule window, and Worklist Summary window

Use this procedure to review the status of the inprocess samples while the system processes the worklist.

NOTE: You can add or delete the tests and profiles for samples after the first sample in the rack has entered the inprocess queue and until the system aspirates the sample. However, you cannot edit a batch after the first sample in the batch has entered the inprocess queue.

133

1. At the workspace, select **Inprocess Samples Status.**

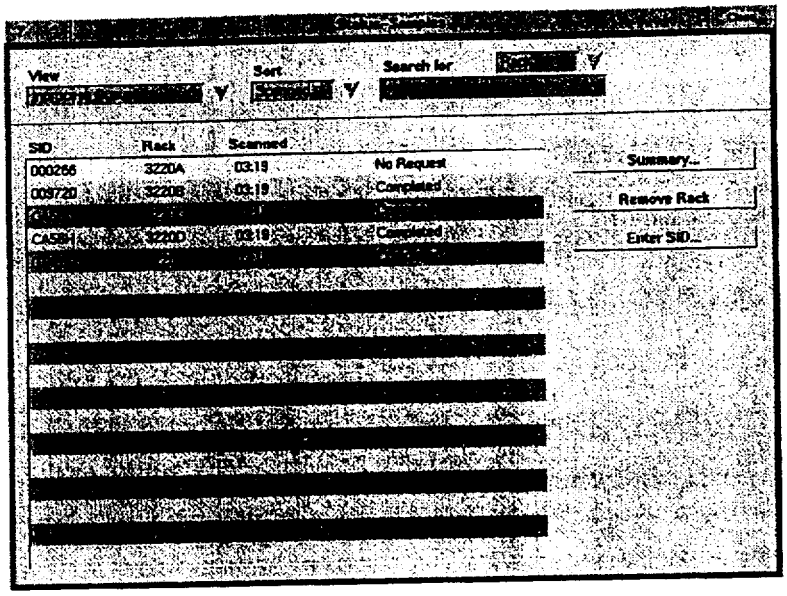

2. Review the status of the inprocess samples.
3. You can edit a test request:
   a. Select the sample for the request you want to edit.
   b. Select **Summary.**
   c. Select a sample or a test.
   d. Select:
      - **Delete** to delete it from the worklist, and then select **Yes.**
      - **Schedule** to add it to the worklist, and then select **Save.**
4. You can edit patient demographics:
   a. Select the sample.
   b. Select **Summary.**
   c. Select **Schedule.**
   d. Select **Demographics.**
   e. Edit the demographic information, as described in *Entering Patient Demographics*, page 4-30.
   f. You can select **Comments** to enter up to three sample comments, and then select **Save.**
   g. Select **Save** at the Worklist–Demographics window.

Modifying the Worklist

You can modify the worklist:

- Reviewing the Worklist Summary
- Querying an LIS
- Adding patient requests
- Entering patient demographics
- Adding Stat requests
- Adding batch requests
- Adding calibrator requests
- Adding control requests
- Entering dilution options
- Entering reagent options
- Editing requests
- Editing batch requests
- Deleting requests

Reviewing the Worklist Summary

Use the Worklist–Summary window as the primary window to operate the system.

You can locate specific information by selecting the appropriate View and Sort:

- The View that you select controls the results that the system displays. For example, if you select Calibrators, the system displays the calibration results. If you select All, the system displays all results.
- The Sort that you select controls the order in which the system displays results. For example, if you select SID, the system sorts and displays the results in ascending SID order.

You can perform the following tasks at Worklist Summary by selecting the View, the Sort, and the specified titlc for the third column:

Task	View	Sort	Third Column
Checking the time that a sample result will be available	Pending Tests	Scanned	Time Due
Reviewing sample results	Current Results	SID	Conc
Reviewing infectious disease sample results	Current Results	SID	Index

135

1 UP

Checking QC results	Controls	SID	Conc
Checking calibrator results	Calibrators	SID	Conc
Checking Stat sample results	Stat	SID	Conc
Assigning a calibration	Stored RLU		
Reviewing sample results when all tests are completed	Historical		

Querying an LIS

Use this procedure to schedule the worklist if your system is set up for manually-initiated queries.

1. At the workspace, select **Worklist**.
2. Select **Summary**.
3. Select **LIS Communications**.
4. Select **Receive Requests from LIS**.
5. You can specify a starting date and an ending date.
6. Select **Continue**.

Adding Patient Requests

1. At the workspace, select **Worklist**.
2. Select **Schedule**.

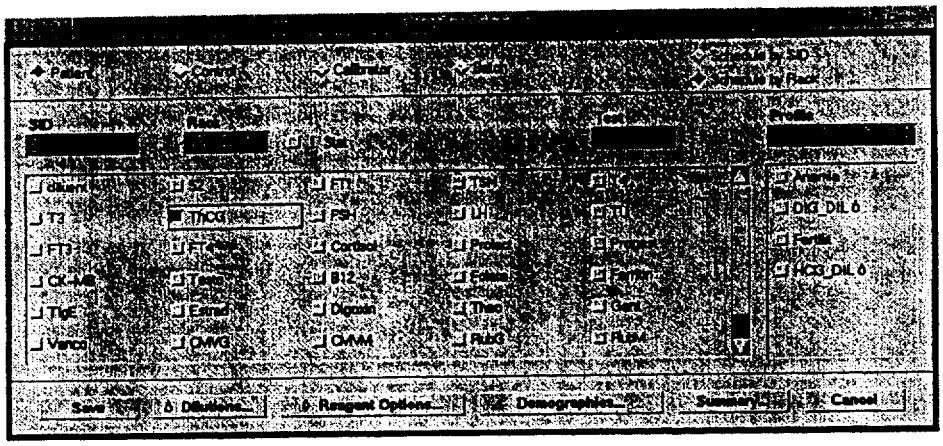

3. Specify either **SID** or **Rack**,if required.
4. Select **Stat** to run the sample before other tests, if appropriate.
5. Enter or select the profiles or the tests.

136

6. You can select the following options:
   - You can select **Dilutions** and then specify dilution information, as described in *Entering Dilution Options*, page 4-34.
   - You can select **Reagent Options** and then specify a specific reagent lot or pack as described in *Entering Reagent Options*, page 4-35.
   - You can select **Demographics** and then enter demographic information, as described in *Entering Patient Demographics*, page 4-30.
7. Select **Save**.

Entering Patient Demographics

Use this procedure to enter patient demographic information. Entering patient demographic information is optional. You can enter patient demographic information at the following times:

- as you schedule samples in the worklist
- after you create the worklist
- while tests are running

1. At the Worklist–Schedule window, schedule the sample, if required.
2. Select **Demographics**.
3. Enter the demographic information.

   The information appears in the demographic fields on the window and on collated patient reports.

Field Name	*Description*
SID	Sample identifier. You can enter up to 13 alphanumeric characters.
Rack	Rack identifier. You can enter up to 5 alphanumeric characters.
PID	Patient identifier. You can enter up to 13 alphanumeric characters.
Name	Patient's name. You can enter up to 19 alphanumeric characters.
DOB	Patient's date of birth. Use the dd mmm yyyy format (for example: 11 Aug 1975). Use the following abbreviations for months: Jan, Feb, Mar, Apr, May, Jun, Jul, Aug, Sep, Oct, Nov, Dec.
M or F	Patient's gender. You can select M (male) or F (female).

137

101

Field Name	Description
Location	Location of patient in the facility. You can enter up to 10 alphanumeric characters.
Physician	Physician's name. You can enter up to 12 alphanumeric characters.

4. You can select **Comments** to enter up to three comments and then select **Save.**

NOTE: If you finish your changes to the demographics and you change the Rack ID before you save your changes, then as soon as you press **Enter,** the system asks if you want to save the changes you made for the previous Rack ID.

5. Select **Save** at the Worklist–Demographics window.
6. If you are entering new demographic data, select **Save** at the Worklist–Schedule window.

Adding Stat Requests

Schedule a sample as a Stat to run the sample before other tests on the worklist.

1. At the workspace, select **Worklist.**
2. Select **Schedule.**
3. Specify either **SID** or **Rack** if required.
4. Select **Stat.**
5. Enter or select the appropriate profiles or tests.
6. You can select the following options:
   a. You can select **Dilutions** and then specify dilution information, as described in *Entering Dilution Options*, page 4-34.
   b. You can select **Reagent Options** and then specify a specific reagent lot or pack as described in *Entering Reagent Options*, page 4-35.
   c. You can select **Demographics** and then enter demographic information, as described in *Entering Patient Demographics*, page 4-30.
7. Select **Save.**

Adding Batch Requests

Use this procedure to schedule a batch of patient samples that require the same tests.

1. At the workspace, select **Worklist.**
2. Select **Schedule.**

3. Select **Batch.**

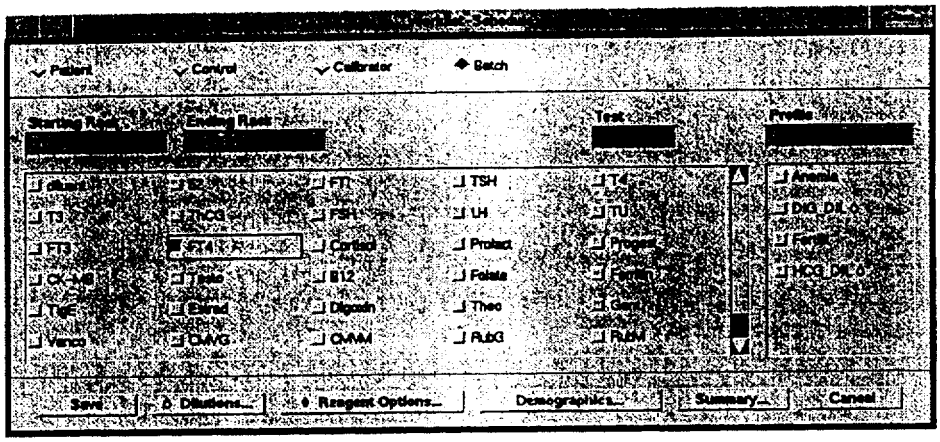

4. Enter the number and position of the starting rack in **Starting Rack.**

   Rack numbers contain a four-digit rack identifier followed by a letter from A to E, which indicates the sample position in the rack.

5. Enter the number and position of the ending rack in **Ending Rack.**
6. Enter or select the appropriate profiles or tests.
7. Select **Save.**

   The system performs the requested tests on all samples loaded between the starting rack and the ending rack. You can load the racks in any order.

Adding Calibrator Requests

1. Determine which tests require a calibration:
   a. At the workspace, select **Calibration.**
   b. Select **Summary.**
   c. Select **Status** in Sort.
   d. Review the calibration status and due dates.
2. At the workspace, select **Worklist.**
3. Select **Schedule.**

139

4. Select **Calibrator.**

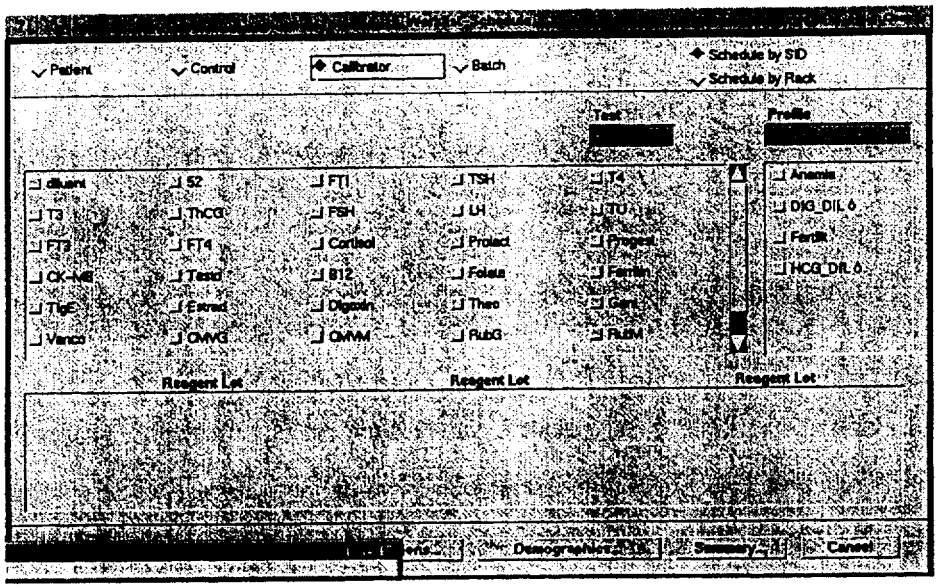

5. Enter or select the appropriate profiles or tests.
6. Select one or more calibrator names from the list. You can schedule multiple calibrators at one time.
7. You can accept the default lot or select a lot from the list.

   The system displays the assigned SIDs for the low and high calibrators.
8. You can specify the **Rack** for the low and high calibrators.

   If you do not specify the Rack, the system assigns the Rack when you load the calibrators.
9. You can specify reagent options if appropriate.
10. Select **Save.**

Adding Control Requests

To monitor system performance and chart trends, Chiron Diagnostics recommends that you run a minimum of three levels of QC material at least once during each 8 or 24 hour shift, depending on the assay. If your established QC program requires more frequent use of controls, then follow those procedures. Refer to the assay product inserts for specific QC recommendations for each assay.

1. At the workspace, select **Worklist**.
2. Select **Schedule.**

140

140

3. Select **Control**.

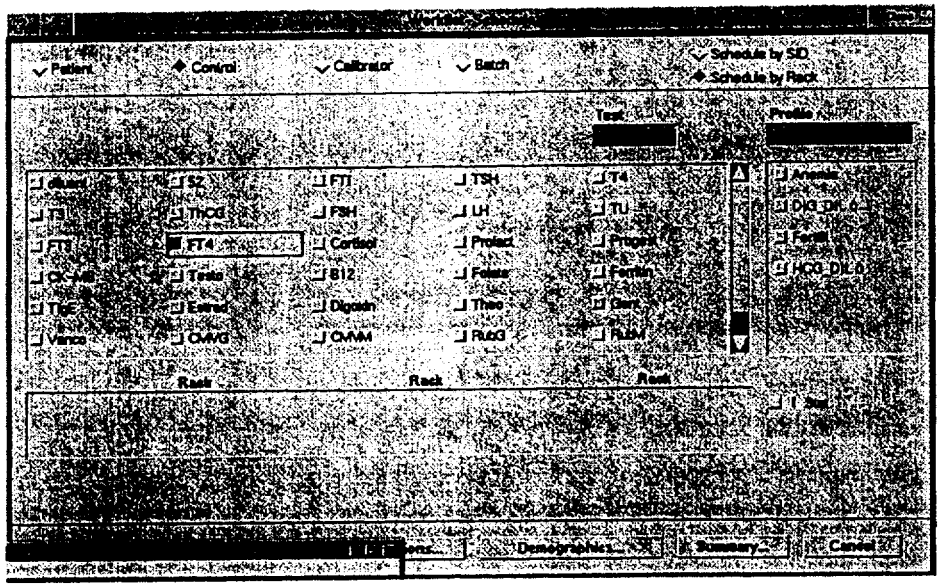

4. Enter or select the appropriate profiles or tests.
5. Select a control lot and SID.
6. You can select the following options:
   a. You can select **Stat**.
   b. You can specify the **Rack**.
   c. You can select **Dilutions** and then specify dilution information as described in *Entering Dilution Options*, page 4-34.
   d. You can select **Reagent Options** and then specify a specific reagent lot or pack as described in *Entering Reagent Options*, page 4-35.
7. Select **Save**.

Entering Dilution Options

Use this procedure to enter the dilution information for samples on the worklist.

1. At the Worklist–Schedule window, schedule the sample, if required.

147

2. Select **Dilutions.**

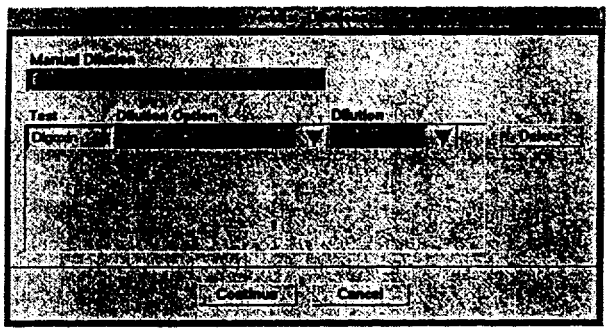

3. If you diluted the sample before placing it in the rack, enter the dilution factor in **Manual Dilution.**
4. If you want the system to dilute the sample, select a dilution option:
   - Undiluted Only if the sample does not require dilution
   - Diluted Only if you are certain that the sample requires dilution
   - Undiluted & Diluted if you do not know whether the sample requires dilution
   - Dilute If Over (performs test on undiluted sample first) if the sample may require dilution above a value
5. Select a dilution factor in **Dilution.**
6. Select **Continue.**
7. Select **Save** at the Worklist–Schedule window.

Entering Reagent Options

1. At the Worklist–Schedule window, schedule the sample, if required.
2. Select **Reagent Options.**
3. For each test that requires specific reagents, you can select the reagent options:
   a. Select a Lot.
   b. Select a Pack ID.
   c. Select an ancillary reagent lot.
   d. If appropriate, select a second ancillary reagent lot.
   e. Select a Diluent.
   f. Enter the number of Replicates.
4. Select **Continue.**
5. Select **Save** at the Worklist–Schedule window.

143

Editing Requests

1. At the workspace, select **Worklist**.
2. Select **Summary**.

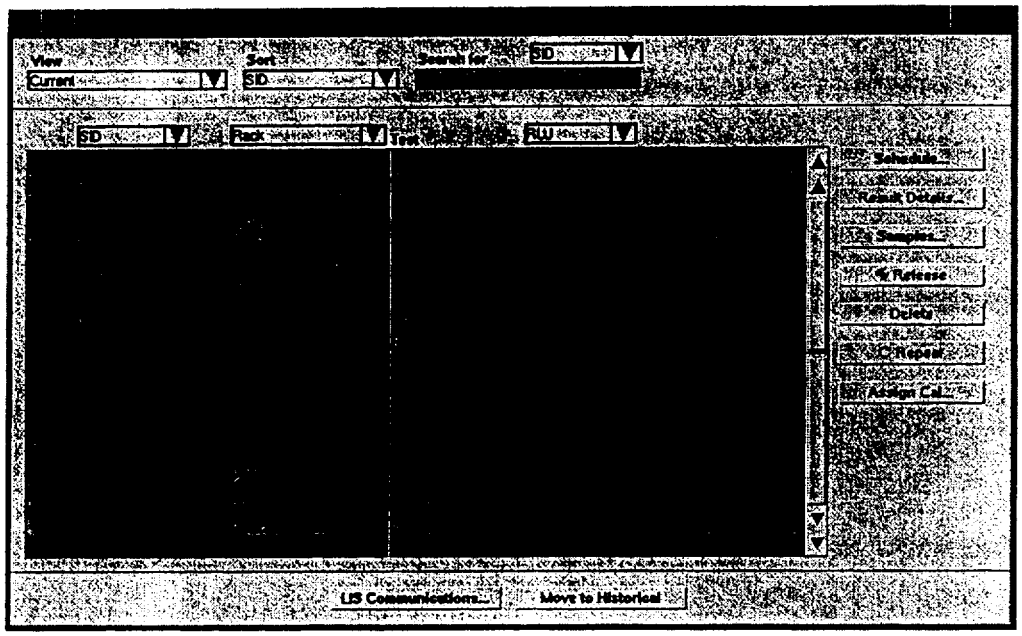

3. Select a sample or a test.
4. Select:
   - **Delete** to delete the sample from the worklist or to delete an individual test, select the option you want, and then select **Yes**.
   - **Schedule** to add or delete tests, modify dilutions, specify reagent lots or packs, or modify demographics, and then select **Save**.

Editing Batch Requests

NOTE: You cannot edit a batch after the first sample in the batch has entered the inprocess queue.

1. At the workspace, select **Worklist**.
2. Select **Summary**.
3. Select **Pending Batches** in View.
4. Select a batch.
5. Select **Schedule**.

143

6. Select:
   - **Delete** to delete it from the worklist, and then select **Yes**.
   - **Schedule** to add it to the worklist, and then select **Save**.

   NOTE: The new test request overrides the existing test request.

Deleting Requests

1. At the workspace, select **Worklist**.
2. Select **Summary**.
3. Select a sample or a test.
4. Select **Delete**.
5. Select **Yes**.

144

Evaluating the Results

Use this section to evaluate and manage the results:

- review the results
- edit the results
- send the results to an LIS
- print the results

Reviewing Results

Use this procedure to review the results for controls and patients.

1. At the workspace, select **Worklist**.
2. Select **Summary**.
3. You can search for the sample:
   a. Select **SID** in **Search for**.
   b. Enter the SID in **Search for SID**.
4. Review the results.
5. You can display the result details:
   a. Select the result.
   b. Select **Result Details**.
6. You can review historical results:
   a. At the workspace, select **Historical Results**.
   b. Review the results.

Repeating a Test

The following table lists the conditions under which the system repeats samples and adds remarks. Refer to *Defining Repeats* in Section 9 for more information about setting up sample repeats.

If the result is . . .	*Then the system . . .*
below the lowest Master Curve point	repeats the sample if a below check range limit is defined for the test.
below the check range	repeats the sample if a below check range limit is defined for the test and adds a flag to the result.
above the normal range	does not repeat the sample, but adds a flag to the result.
below the normal range	does not repeat the sample, but adds a flag to the result.
not calculated due to noise, poor signal, floating point error, or invalid dark count	repeats the sample and adds a flag to the result.

1. At the Worklist–Summary window, select a sample on the left side of the worklist or a test on the right side of the worklist.
2. Select **Repeat**.

Editing Results

1. At the workspace, select **Worklist**.
2. Select **Summary**.
3. You can search for a sample:
   a. Select **SID** in **Search for**.
   b. Enter an SID in **Search for SID**.
4. Select a sample.
5. Select **Result Details**.
6. Select a test.
7. Select **Edit Result**.
8. Select **Delete Result**.
9. Select **Yes**.
10. Select **Save**.

140

146

Sending Results to an LIS

Use this procedure to manually send results to an LIS if automatic transfer of results is not defined for your system.

1. At the workspace, select **Worklist**.
2. Select **Summary**.
3. Select **LIS Communications**.
4. Select **Send All Results Except Results On Hold**.
5. You can enter a starting date and an ending date.
6. Select **Continue**.

   The system sends to the LIS all results that match the criteria.

Printing Sample Results

If your system has a printer, you can print collated patient sample reports with a report heading that identifies your hospital or laboratory.

1. At the workspace, select **Worklist**.
2. Select **Summary**.
3. Select the appropriate sample and report.

If you want to . . .	*Then . . .*
print a report for a sample	select a sample.
print a list of pending tests for scheduled samples	a. Select **View**. b. Select **Pending Tests**.
print a historical results report for a sample	a. Select **Historical**. b. Select a sample.
search for a sample and then print a report	a. Select **SID** in **Search for**. b. Enter the SID in **Search for SID**.
print reports for all samples on a rack	a. Select **Rack** in **Search for**. b. Enter the Rack in **Search for Rack**.

147

print the results for scheduled samples	a. Select **View**. b. Select **Results**.
print a report for all samples on the worklist	a. Select **View**. b. Select **All**.
print a report for all tests performed on a patient	a. Select **PID** in **Search for**. b. Enter the PID in **Search for PID**.

4. At the workspace, select **Print**.

Deleting Selected Sample Results

CAUTION: When you delete results, the system permanently removes the results from the database. Refer to *Archiving Results*, page 4-43, to copy the results to diskettes before deleting them from the database.

1. At the workspace, select **Setup**.
2. Select **Data Administration**.
3. Select **Delete**.
   The Setup–Data Administration Options window opens.
4. Complete the appropriate tasks:

If you want to . . .	*Then . . .*
specify a starting date	enter a starting date in the dd mmm yy format.
specify an ending date	enter an ending date in the dd mmm yy format.
delete current results	select **Current** in Results.
delete current and historical results	select **Historical and Current** in Results.
delete historical results	select **Historical** in Results.
delete all results	select **All**
delete pending requests in the worklist	select **All Pending**.
delete results in the worklist	select **All Resulted**.

148

148

If you want to . . .	*Then . . .*
delete printed results	select **All Printed**.
delete results that were sent to the LIS	select **All Sent**.

5. Select **Continue**.
6. Select **Eject Diskette**.
7. Remove the diskette from the drive.

Deleting Worklist Results

CAUTION: When you delete results, the system permanently removes the results from the database. Refer to *Archiving Results*, page 4-43, to copy the results to diskettes before deleting them from the database.

1. At the workspace, select **Setup**.
2. Select **Data Administration**.
3. Select **Worklist**.
4. Select **Delete**.
5. Select **Yes** when prompted.

   The system deletes the results.

149

Maintaining Data Files

Use these procedures to maintain data files:

- archive results based on selected criteria
- retrieve archived results from a diskette and review them on the system

For optimum efficiency in locating results and managing patient data, Chiron Diagnostics recommends that you delete results from the database at regular intervals. If you want to keep copies of results, you can use the archiving options to copy the results to diskettes before deleting them from the database.

Archiving Results

Archiving is the process of organizing and storing the results on double-sided, high-density diskettes (1.44 megabytes).

1. At the workspace, select **Setup**.
2. Select **Data Administration.**
3. Select an area.
4. Select the results that you want to archive.

If you want to archive . . .	*Then select . . .*
all results except worklist results	All (Except Worklist).
worklist results	Worklist.
calibration data, QC data, and test definitions	either Quality Control, Calibration Data, or Test Definitions because they are backed up as a set.

5. Insert the diskette in the drive.

   NOTE: Formatting a diskette erases any existing data.
6. Select **Format Diskette** if the diskette is unformatted.

   The system formats the diskette, which takes a few minutes.
7. Select **Back Up.**
8. Select **Eject Diskette.**
9. Remove the diskette from the drive.

150

120

Restoring Archived Results

NOTE: You cannot edit archived results that are stored on diskettes.

1. At the workspace, select **Setup**.
2. Select **Data Administration.**
3. Insert the diskette containing the results you want to review in the diskette drive.
4. Select the archived results that you want to restore.

If you want to archive . . .	*Then select . . .*
all results except worklist results	All (Except Worklist).
calibration data, QC data, and test definitions	either Quality Control, Calibration Data, or Test Definitions because they are backed up as a set.

NOTE: You cannot perform any operations while the system is restoring results from a diskette.

5. Select **Restore.**
6. Select **Eject Diskette.**
7. Remove the diskette from the drive.

151

121

5 Calibration

Quantitative Assays **5-3**
Principle 5-3
Establishing a Master Curve 5-3
Two-Point Calibration 5-5
Calibration Evaluation Ranges 5-6
What Are Calibration Evaluation Ranges (CERs)? 5-6
Why Use CERs? 5-6
Objectives of the Calibration Process 5-6
How Does CER Work? 5-7
Reference Serum Calibration for T Uptake 5-8

Qualitative Assays **5-9**
Principle 5-9
Calculating a Cutoff Point 5-9
Establishing a Master Curve 5-10
Two-Point Calibration 5-10
Calculating the Result 5-11

Defining Calibration **5-12**
Defining a Master Curve 5-12
Defining Calibrator Assigned Values 5-13

Performing Calibrations **5-15**
Verifying Calibration Status and Due Dates 5-15
Scheduling Calibrators 5-16
Reviewing Calibration Data 5-17
Reviewing Historical Calibration Data 5-18
Excluding a Calibration Result 5-19
Waiving an Expired Calibration 5-20
Accepting an Invalid Calibration 5-20
Printing Calibration Data 5-20

157

153

L23 - 154

Quantitative Assays

This section describes the calibration methods that the ACS:Centaur system uses to calibrate the quantitative assays:

- Master Curve and two-point calibration system for quantitative (competitive and sandwich binding) assays
- reference serum calibration (ACS T Uptake assay)

Calibration of the system minimizes variation:

- between lots
- between systems

Principle

The ACS:Centaur system uses a Master Curve and a two-point, user-initiated calibration to calibrate quantitative ACS assays. The Master Curve and the two-point calibration method eliminate the need to measure a full standard curve or to include calibration with each assay. The system stores the calibration for the interval specified in the assay product inserts. You do not need to calibrate an assay until:

- the calibration interval expires
- you use a new lot of assay reagents or calibrators
- your controls are out of range

Establishing a Master Curve

Before releasing a new lot of reagents, full standard curves are performed for each assay on multiple systems over several days. The analyte concentration and RLU pairs define the shape of the Master Curve for a particular lot of assay reagents.

154

Each ACS assay kit includes a Master Curve card that lists the analyte concentration and relative light units (RLUs) for each Master Curve point.

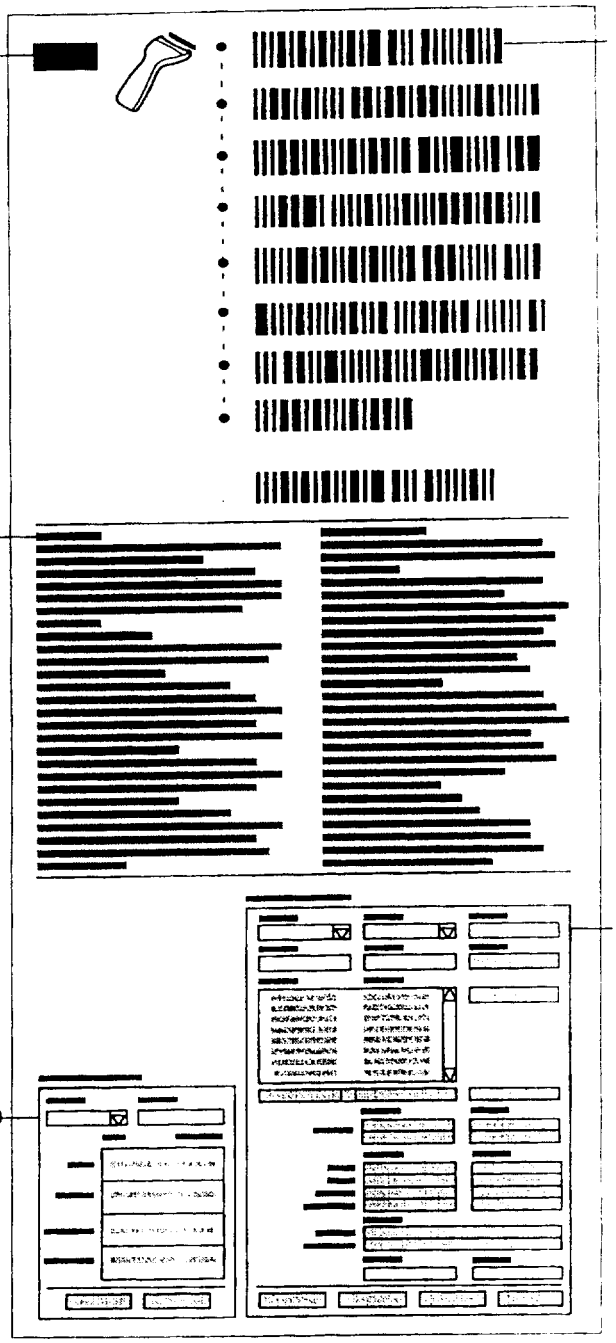

1. Scan these barcodes with the scanner.

2. If the barcodes do not scan correctly, you can use the keyboard to enter the Master Curve definition at the Master Curve Definition window. The information on the Master Curve card is specific for the reagent lot.

3. Some assays require information at the Lot Details window.

155

125

The Master Curve for a competitive binding assay has a negative slope, which indicates that the analyte concentration is inversely proportional to the measured RLUs.

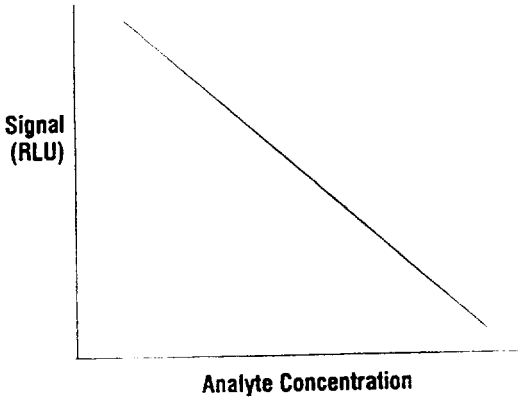

The Master Curve for a sandwich assay has a positive slope, which indicates that the analyte concentration is directly proportional to the measured RLUs.

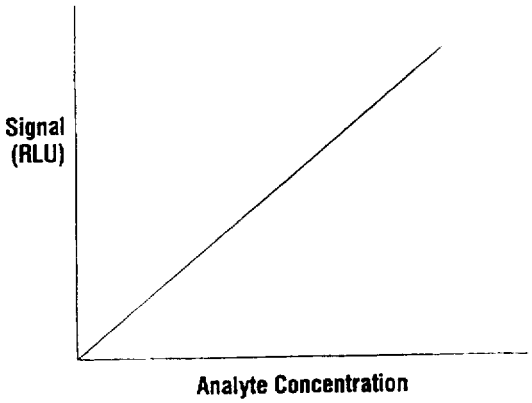

Two-Point Calibration

Each ACS calibrator kit includes a Calibrator Assigned Value card that provides the calibrator values for each analyte in the low and high calibrators.

These calibrators may produce different RLU values on different systems due to system-to-system variability, particularly due to the sensitivity of the photomultiplier tube (PMT). The Master Curve is validated on your system by assaying the high and low calibrators for two known analyte concentrations. Your system determines the mathematical relationship between the calibrator RLUs that your system measured and the RLUs you entered from the Master Curve card, and then converts the RLUs to Master Curve RLUs.

156

126

When a patient sample is assayed, the system measures the RLU value and then converts it to a Master Curve RLU value. The Master Curve RLU value is matched to its corresponding analyte concentration using the Master Curve. The analyte concentration is then recorded as the patient sample result.

Calibration Evaluation Ranges

What Are Calibration Evaluation Ranges (CERs)?

CERs are metrics that are based on high and low calibrator RLUs and the Master Curve. CERs are used to evaluate the integrity of a calibration.

Why Use CERs?

- CERs increase the confidence in the calibration data generated by the system.
- CERs provide information about the integrity of a calibration beyond the generated QC.
- CERs reduce the instances of borderline calibrations that might not hold for the specified calibration interval.
- CERs minimize lost assays due to controls drifting out of range. An optimized calibration decreases total % CVs.

Objectives of the Calibration Process

- To provide specific calibration acceptance criteria
- To evaluate calibrations on their own merit separate from evaluation of quality control material by checking the quality of a calibration at the time of calibration
- To preserve test results that follow a failed calibration
- To provide detailed information to troubleshoot a failed calibration
- To decrease the need for recalibrations and determine when recalibration is necessary
- To provide onboard historical calibration information
- To edit a replicate RLU of a particular calibration

157

Term	Definition
Slope and intercept	relate the signal of the calibrated system to the signal of the factory generated curve at the two calibrator values. The slope and intercept are used to adjust the signal intensity of the observed values to the Master Curve values. For example, if the slope equals two and the intercept is zero, then the Master Curve RLUs are approximately two times the ACS:Centaur system RLUs.
Ratio	compares the high calibrator signal in RLUs to the low calibrator signal in RLUs.
Low Cal deviation	measures how well the low calibrator maps onto the Master Curve.
High Cal deviation	measures how well the high calibrator maps onto the Master Curve.
Defined Ranges	are specified ranges for each assay that are defined by the manufacturer. CER values must fall within the defined ranges. The ranges are entered into the system from the Master Curve card.
Observed Ranges	compare CER values specific to a calibrator and reagent lot combination for an individual system. The ranges are established by the system after the lot information has been entered and four calibrations have been performed. The observed ranges are updated after each subsequent calibration.
Calibrator CV	or coefficient of variation is a measure of the precision of the low and high calibrator replicates and is calculated from the RLUs.

How Does CER Work?

1. The CER checks the RLU precision of low and high calibrator replicates (CV).
2. The CER checks the slope, ratio, and low and high calibrator deviations against a defined range for the specific assay.
3. The CER checks the slope, ratio, and low and high calibrator deviations against an observed range after the fourth calibration of a reagent lot and calibrator lot combination. The CER is calibrator and reagent lot specific.
4. The CER determines if renormalization of the current calibration is necessary.
   - If so, then a new slope and intercept are calculated.
   - If not, then the previous calibration expiration is extended using the same interval.

158

5. RLUs from an invalid calibration can be evaluated using the last valid calibration or the next valid calibration for that assay.

Reference Serum Calibration for T Uptake

The ACS T Uptake assay provides an indirect measure of the number of unoccupied binding sites on thyroxine-binding proteins in a patient sample. In this assay, a direct relationship exists between the RLUs detected by the system and the number of binding sites available on the thyroxine-binding proteins. This results in a higher T Uptake ratio when there are fewer free binding sites, and a lower ratio when there are more free binding sites.

A Master Curve is not necessary for the T Uptake assay because it is a ratio test. The T Uptake Master Curve card provides only lot and expiration date for the assay reagents. The T Uptake assay compares the control and patient sample uptake results with an euthyroid reference serum of known uptake. The T Uptake assay uses Low Calibrator A as follows:

$$\text{T Uptake ratio} = \frac{\text{ACS Calibrator A RLUs}}{\text{Unknown RLUs}} \times \text{reference serum factor}$$

The reference serum factor is printed on the Calibrator Assigned Value card provided with Calibrator A.

To report results as % T Uptake, the ACS:Centaur system requires a % T Uptake normal (reference) range. The system multiplies the T Uptake ratio by the midpoint of the % T Uptake normal range to obtain % T Uptake results.

Example

If the % T Uptake normal range is defined as 25 to 35% (midpoint of 30), and a patient sample has a T Uptake ratio of 0.82, the system calculates the % T Uptake as follows:

$$0.82 \times 30 = 24.6\%$$

The system reports 24.6% as the % T Uptake.

159

Qualitative Assays

Principle

Forward sandwich assays have a cutoff point that remains constant for each lot number of reagent. The cutoff point is defined by an index of 1.0 and the associated signal derived from the calibration curve.

1. Each kit lot number is calibrated and a Master Curve card is created.
2. The operator transfers the Master Curve from the Master Curve card to the system.
3. The operator runs the low and high calibrators to generate a correction formula for the specific system.
4. The system applies the correction formula to the observed signal for a sample and calculates the result.
5. The assay cutoff point is established using population studies.

Calculating a Cutoff Point

During product development, a cutoff point is established from extensive population studies. The analyte concentration associated with the cutoff point is assigned an index value of 1.0. A series of standards is characterized by comparing the standards' levels of reactivity to the cutoff point.

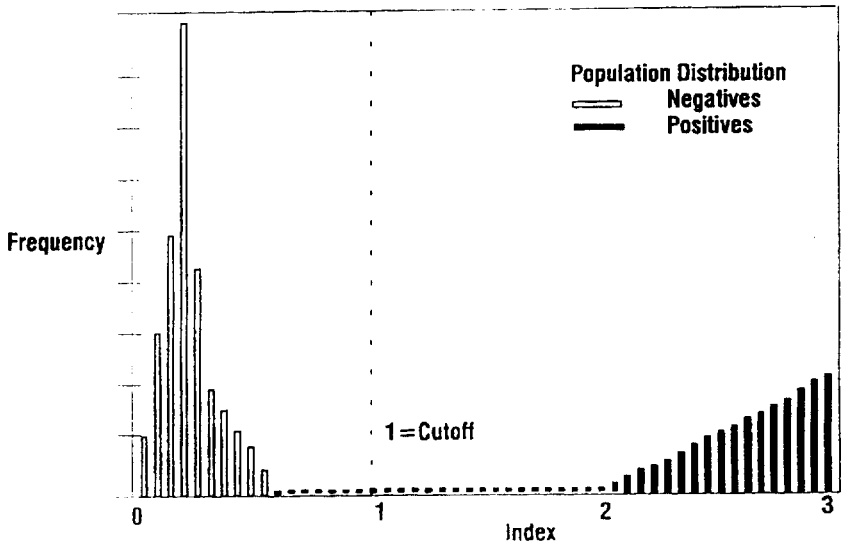

160

170 ~~101~~

Establishing a Master Curve

To generate a Master Curve, the standards of varying concentrations are run on multiple systems over several days. The resulting standard curve determines the relationship between the defined analyte levels and the measured signal using the reagents from the specific lot number. These values become the lot-specific Master Curve and are recorded as barcodes on the Master Curve card.

The operator scans the barcoded Master Curve values on the card into the system. The system then fits the values to a curve using a 4 Parameter Logistic (4PL) function. The 4PL function is used for qualitative assays because it best describes the typical antibody-antigen binding curve. For information on scanning the Master Curve Card, refer to *Defining a Master Curve*.

Two-Point Calibration

In order to calibrate a qualitative assay on the system, the operator runs two calibrators of known value in replicate. For information on analyzing the calibrators, refer to *Performing Calibrations*.

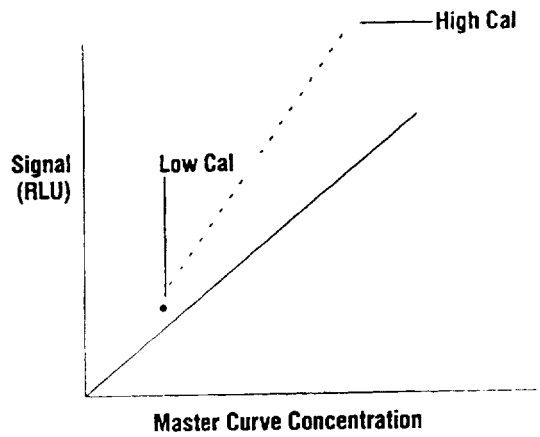

If the calibrators meet specific defined validity criteria, the system compares the measured signals for each calibrator to the Master Curve and determines a system-specific correction formula. This formula applies to the signal measured on all samples assayed on the system.

$$corrected\ signal = \frac{observed\ signal - defined\ intercept}{defined\ slope}$$

167

131 100

Calculating the Result

When patient samples or controls are assayed, the signal read by the system is corrected by the formula derived from the two known calibrators. The corrected signal is compared to the calibration curve, and its associated index value is determined.

- If the index value is greater or equal to 1.0, then the sample is interpreted as reactive.
- If the index value is less than 1.0, then the sample is interpreted as nonreactive.

167

+32 110

Defining Calibration

Use the procedures in this section to define calibration for ACS:Centaur tests:

- Defining Master Curves
- Defining calibrator assigned values

Defining a Master Curve

Use the Master Curve card provided with each new lot number of reagent packs to establish the Master Curve. You can enter, store, display, and calibrate more than one lot of reagent. This allows you to efficiently transition from one lot of reagent to another.

1. At the workspace, select **Calibration**.
2. Select **Master Curve Definition**.

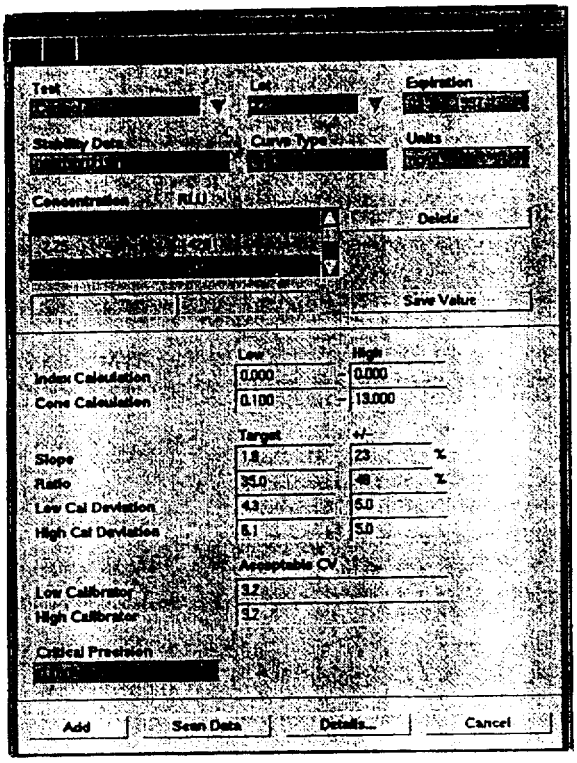

3. Select **Scan Data**.
4. Scan the Master Curve barcodes from the top of the card to the bottom.
5. Select **Save**.

163

133 404

Defining Calibrator Assigned Values

Use this procedure to enter or edit the calibrator values from the Calibrator Assigned Value card for each new lot number of calibrators.

1. At the workspace, select **Calibration**.
2. Select **Calibrator Definition.**

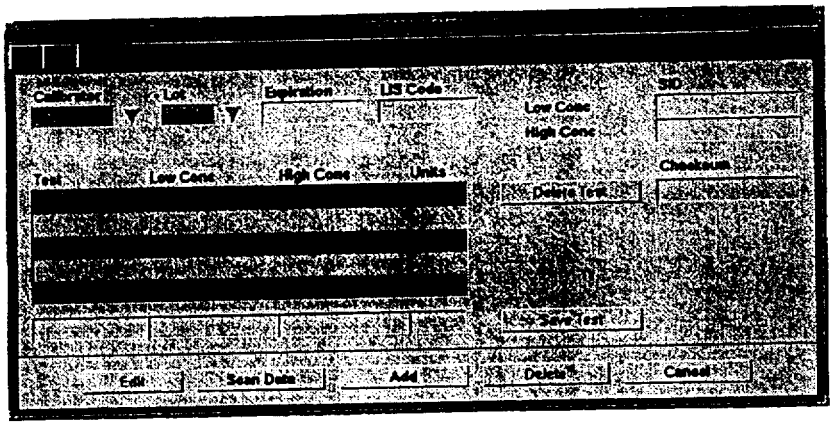

3. Complete the appropriate task.

If you want to . . .	*Then . . .*
enter a calibrator definition	a. Select **Scan Data.** b. Scan the barcodes on the Calibrator Assigned Value card from top to bottom.
manually enter a calibrator definition	a. Select **Add.** b. Enter a calibrator. c. Select or enter a lot. d. Enter the **Expiration** date. e. Enter the **LIS Code.** The SID of the Low Calibrator appears in Low Conc. The SID of the High Calibrator appears in High Conc. f. In the empty row below the table, enter the test name, the Low Calibrator value in Low Conc, the High Calibrator value in High Conc, and the units. g. Select **Save Test.** h. Repeat steps f and g for each test. i. Enter the **Checksum.** j. Select **Save.** k. Select **Yes** to save the changes.

164

174 170

If you want to . . .	*Then . . .*
delete a calibrator definition	a. Select a calibrator. b. Select a lot. c. Select a test. d. Select **Delete**. e. Select **Continue**.
add a test to a calibrator definition	a. Select a calibrator. b. Select a lot. c. Select **Edit**. d. In the empty row below the table, the calibrator test name, the Low Calibrator value in Low Conc, the High Calibrator value in High Conc, and the units. e. Select **Save Test**.
delete a test from a calibrator definition	a. Select a calibrator. b. Select a lot. c. Select a test. d. Select **Delete Test**. e. Select **Continue**.
edit the LIS Code for a calibrator definition	a. Select a calibrator. b. Select a lot. c. Select **Edit**. d. Edit the LIS Code.

4. Select **Save**.
5. Select **Yes** to save the changes.

Performing Calibrations

Use the procedures in this section to calibrate the ACS:Centaur system:

- verify the calibration status
- review due dates for the next calibration
- schedule a calibration
- review calibration data
- print reports

Verifying Calibration Status and Due Dates

The system calculates the next calibration date by adding the calibration interval to the date of the most recent calibration.

1. At the workspace, select **Calibration**.
2. Select **Summary**.
3. Select **All Tests** in View.
4. Select **Status** in Sort.
5. Review the calibration status and due dates.

   The system displays tests without Master Curves, and then expired calibrations.

Calibration Flag	Description
Accepted ?	You manually accepted an invalid calibration. Schedule a calibration as described in *Scheduling Calibrators*, page 5-16.
Current	The calibration is valid and the test does not require calibration.
Due ?	
Expired	The calibration has expired. Schedule a calibration as described in *Scheduling Calibrators*, page 5-16.
Inprocess ?	The test is being calibrated.
Invalid ?	
No Master Curve	The test does not have a Master Curve. Enter a Master Curve for the test as described in *Defining a Master Curve*, page 5-12.

166

136

Calibration Flag	Description
Pending ?	The calibration is scheduled.
Waived	You used an expired calibration for the result. Schedule a calibration as described in *Scheduling Calibrators*, page 5-16.

Scheduling Calibrators

1. At the workspace, select **Worklist**.
2. Select **Schedule.**
3. Select **Calibrator.**

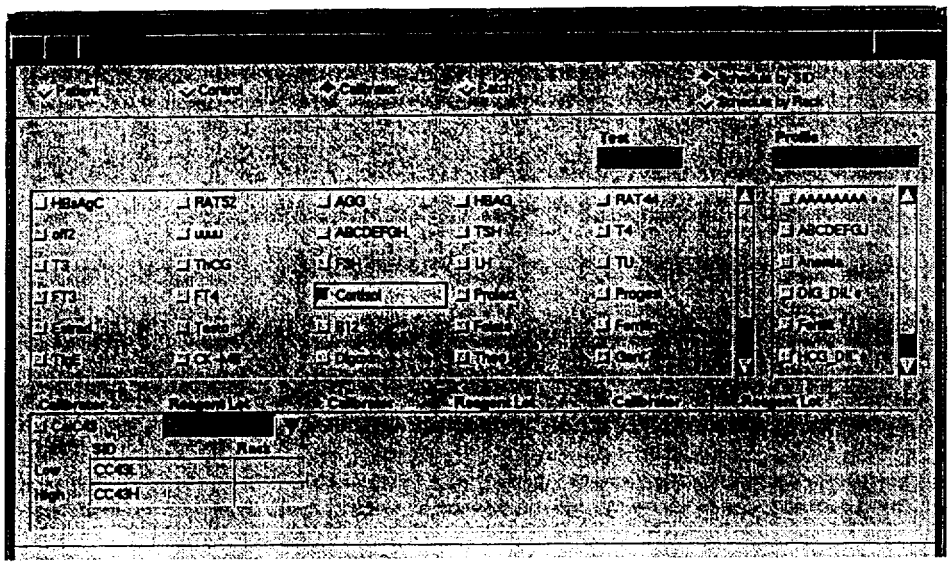

4. Select the appropriate profiles or tests.
5. You can select a calibrator name from the list.
6. You can accept the default reagent lot, enter a lot, or select a lot from the list.

   The system provides the calibrator expiration date and the assigned SIDs for the low and high calibrators.
7. Select the SIDs for the low and high calibrators.
8. You can specify the **Rack** for the low and high calibrators.

   If you do not specify the Rack, the system assigns the Rack when you load the calibrators.
9. Select **Save.**
10. You can repeat steps 4 through 9 to schedule additional calibrators.
11. You can select **Summary** to review the worklist.

167

12. Select **Close** and then select **Yes** to save the changes.
13. Install sample cups of low and high calibrators in a rack.
14. Install the rack on the system as described in *Processing the Samples* in Section 4.

Reviewing Calibration Data

1. At the workspace, select **Calibration**.
2. Select **Data**.

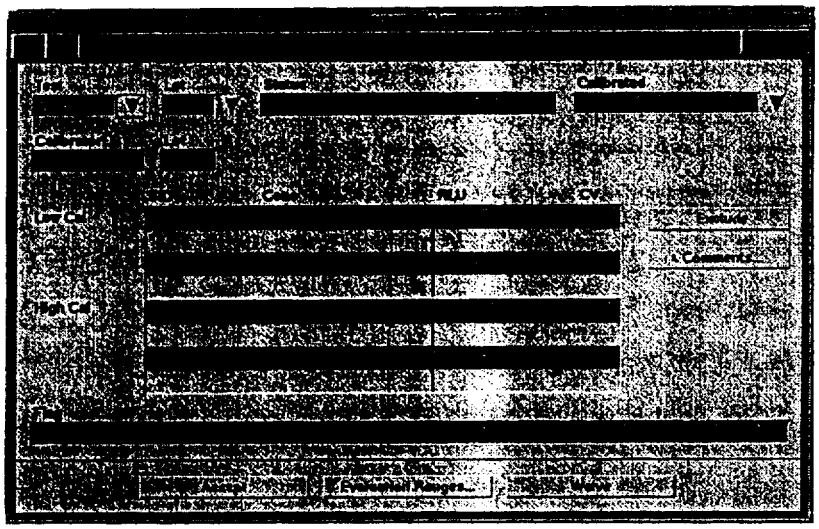

3. Enter the test criteria:
   a. Select a test.
   b. Select a lot number.
   c. Select a calibration date in **Calibrated**.
4. Review the calibration status, results, and flags.

Calibration Flag	Description
Accepted ?	You manually accepted an invalid calibration. Schedule a calibration as described in *Scheduling Calibrators*, page 5-16.
Current	The calibration is valid and the test does not require calibration.
Due ?	
Expired	The calibration has expired. Schedule a calibration as described in *Scheduling Calibrators*, page 5-16.

169

135 169

Calibration Flag	Description
Inprocess ?	The test is being calibrated.
Invalid ?	
No Master Curve	The test does not have a Master Curve. Enter a Master Curve for the test as described in *Defining a Master Curve*, page 5-12.
Pending ?	The calibration is scheduled.
Waived	You used an expired calibration for the result. Schedule a calibration as described in *Scheduling Calibrators*, page 5-16.

5. You can add a comment:
   a. Select a calibrator SID.
   b. Select **Comments**.
   c. Enter up to three comments.
      The system enters your initials and the date.
   d. Select **Save**.
6. You can select **Evaluation Ranges** to review details.

Reviewing Historical Calibration Data

1. At the workspace, select **Calibration**.
2. Select **Summary**.

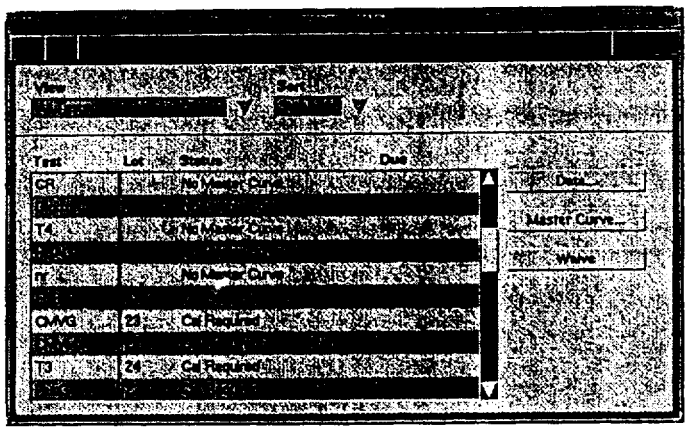

3. Select **Historical** in View.
4. You can enter test criteria:
   a. Select a test.

169

HSP 170

b. Select a reagent lot.

c. Select a calibrator lot.

5. You can select a calibration and select **Data** to review the data.
6. You can select a calibration and select **Master Curve** to review the Master Curve.
7. Select **Save**.
8. You can select **Evaluation Ranges** to review details.

Excluding a Calibration Result

1. At the workspace, select **Calibration**.
2. Select **Data**.

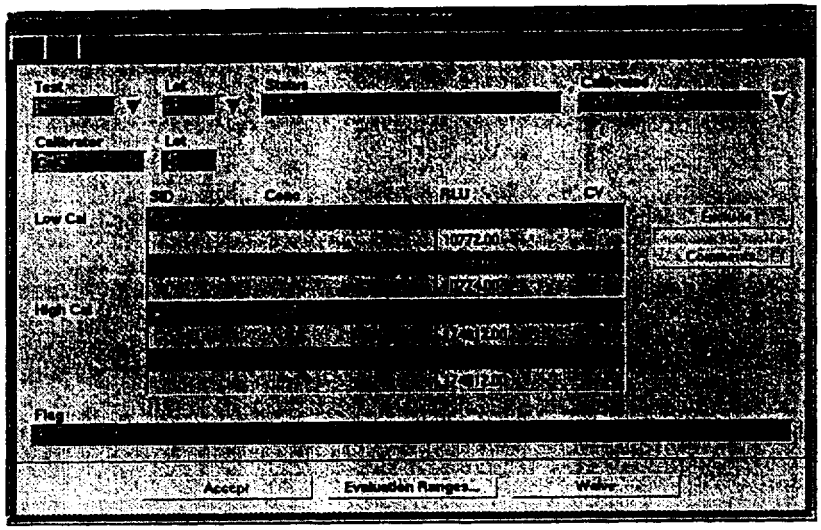

3. Select a test.
4. Select a lot number.
5. Select a calibration date in **Calibrated**.
6. Select a calibrator RLU.
7. Select **Exclude**.
8. Select **Save**.

170

140 141

Waiving an Expired Calibration

The system displays the Expired status flag when the calibration interval for a test is past. You can waive the calibration to run samples in the test.

NOTE: The restricted tests do not allow you to waive expired calibrations. You cannot waive an historic calibration.

1. At the workspace, select **Calibration**.
2. Select **Data**.
3. Select a test.
4. Select a test lot.
5. Select or enter a calibration date in **Calibrated**.
6. Select a calibrator RLU.
7. Select **Waive**.

Accepting an Invalid Calibration

You can accept an invalid calibration by releasing it to an LIS, which activates the calibration.

⚠ **CAUTION:** Accept an invalid calibration only on the recommendation of a Chiron Diagnostics Service Representative.

NOTE: You cannot accept invalid calibrations for some tests.

1. At the workspace, select **Calibration**.
2. Select **Data**.
3. Select a test.
4. Select a lot number.
5. Select a calibration date in **Calibrated**.
6. Select **Accept**.

Printing Calibration Data

1. Open the Calibration window that contains the data that you want to print.
2. At the workspace, select the **Print** symbol.
3. Select the calibration report.
   a. You can select a different starting date or ending date.
   b. You can select the shift.

171

The system prints the report.

172

6 Quality Control

Principles **6-3**

Definitions 6-3

Interpretation of Control Data 6-4

Levey–Jennings Chart 6-4

Westgard Rules 6-5

QC Principles for Quantitative Assays 6-5

QC Principles for Qualitative Assays 6-6

Defining QC **6-7**

Adding a Control 6-7

Editing a QC Definition 6-8

Deleting a Control or a Test 6-8

Printing a QC Definition 6-9

Performing QC **6-10**

Scheduling Controls 6-10

Autoscheduling Controls 6-11

Reviewing QC Data 6-11

Reviewing QC Data Points and Statistics 6-11

Reviewing Levey-Jennings Charts 6-12

Reviewing QC Statistical Summaries 6-13

Editing QC Data Points and Statistics 6-14

Printing QC Reports 6-15

173

Principles

Use this section to learn the principles of Quality Control:

- definitions
- interpretation of control data, such as Levey–Jennings charts and Westgard rules
- QC principles for quantitative assays
- QC principles for qualitative assays

Definitions

Term	Definition
Quality Control	Quality Control (QC) is a method by which acceptable performance is maintained in the analytical laboratory: a. Measure the variability of the analytical process. b. Evaluate the results of the measurement against certain criteria or specifications. c. Correct excess variability when necessary. d. Document the actions.
Quality Control procedures	Reasons for implementing QC procedures include: • to detect when a system is not functioning correctly • to detect shifts in total system performance • to avoid the reporting of erroneous results • to proactively detect trends in system response that may indicate the need for intervention before system performance becomes unacceptable
Quality Control parameters	QC parameters are based on past performance of a system, including a combination of everything involved in the testing process. The system therefore includes the instrument, reagents, system fluids, supplies, materials, and operators. Ranges are constructed to measure the amount of variability. Based on the ranges, it is possible to predict when the system is operating correctly. The controls monitor how well a system is functioning relative to its own performance. When a control falls outside its established range, one or more of the following factors may be involved: • a decrease in precision • a shift in system response • a decrease in accuracy

174
175
176 177

Term	Definition
Quality Assurance	Quality Assurance is the program that ensures the accuracy of the final results reported by the laboratory.
Quality Assessment	Quality Assessment is a method to determine the quality of the results generated by the laboratory. Also known as proficiency testing, it is usually an external evaluation of a laboratory's performance involving the incorporation of proficiency panels as the means of evaluation. Internal quality assessment programs can also be implemented. Quality Assessment is a challenge to the effectiveness of the Quality Assurance and Quality Control programs.

Interpretation of Control Data

A statistically significant number of control data points are generated. Acceptable limits are then established by calculating the mean recovery and a range based on two standard deviations (2SD). Approximately 95% of all subsequent control values should fall within a range of the mean +/– 2SD.

Levey–Jennings Chart

A statistical tool for evaluating and recording the control data is called the Levey–Jennings chart. The chart can evaluate individual results and help to detect trends and shifts in control data.

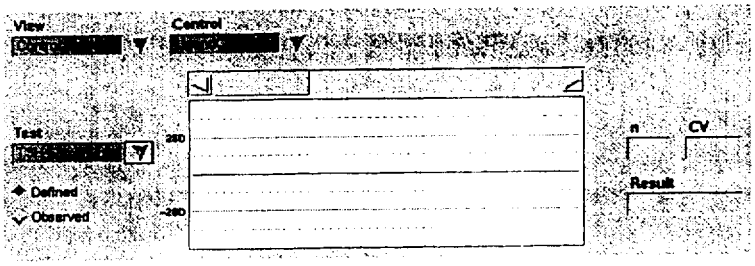

147

176

Westgard Rules

One of the most useful procedures for interpreting control data was developed by Dr. James Westgard and colleagues.[5-1] The Westgard rules are used in conjunction with Levey–Jennings charts to analyze the control data.

Westgard Rule	Description of Violation	Purpose
1_{2s}	One control value falls outside the 2SD limits	warning limit
1_{3s}	One control value falls outside the 3SD limits	to detect large shift or decreased precision
2_{2s}	Two consecutive control values exceed the same 2SD limit	to detect shifts
4_{1s}	Four consecutive control values exceed the same 1SD limit	to detect small shifts or trends, like drift
6x	Six consecutive control values fall on the same side of the mean	to detect trends
T6	Six consecutive control values for one control level display an upward or downward trend	to detect small shifts
10x	Ten consecutive control values fall on the same side of the mean	to detect shifts

The ACS:Centaur system interprets QC data using Westgard rules as follows:

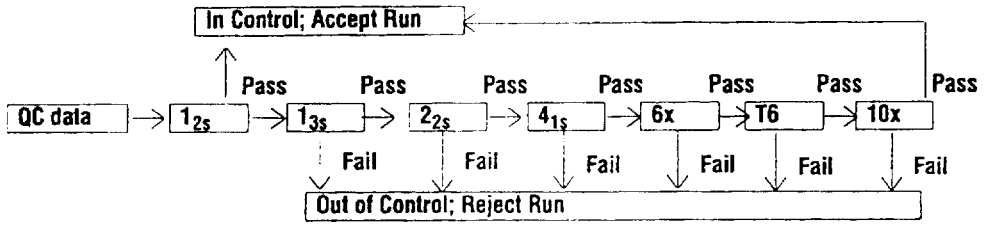

QC Principles for Quantitative Assays

The goal of QC for quantitative assays is to monitor the entire reporting range, or at least the medical decision points.

To monitor system performance and chart trends, Chiron Diagnostics recommends that you run a minimum of three levels of QC material at least once during each 8-hour shift, depending on the assay. If your established QC program requires more frequent use of controls, follow those procedures.

QC Principles for Qualitative Assays

Qualitative tests can be defined as having binary result possibilities: positive or negative, yes or no. Qualitative tests have only one medical decision point or cut-off point. But in reality, qualitative tests have a quantifiable concentration associated with every result.

Measures to control the quality of the results in an Infectious Disease diagnostic laboratory are important because of the consequences of either a false positive or false negative result. Therefore, the goals of QC for qualitative assays are to maximize accuracy, sensitivity, and specificity:

- maximized accuracy minimizes false positives and false negatives
- maximized sensitivity minimizes false negatives
- maximized specificity minimizes false positives

To monitor system performance and chart trends, Chiron Diagnostics recommends that you run a minimum of *[xxx, text from approved PIs]*. If your established QC program requires more frequent use of controls, follow those procedures.

177

145

Defining QC

Use the procedures in this section to define quality control parameters and values for ACS tests:

- add a control
- edit a QC definition
- delete a test or a control
- print a QC definition

Adding a Control

1. At the workspace, select **Quality Control**.
2. Select **Control Definition.**

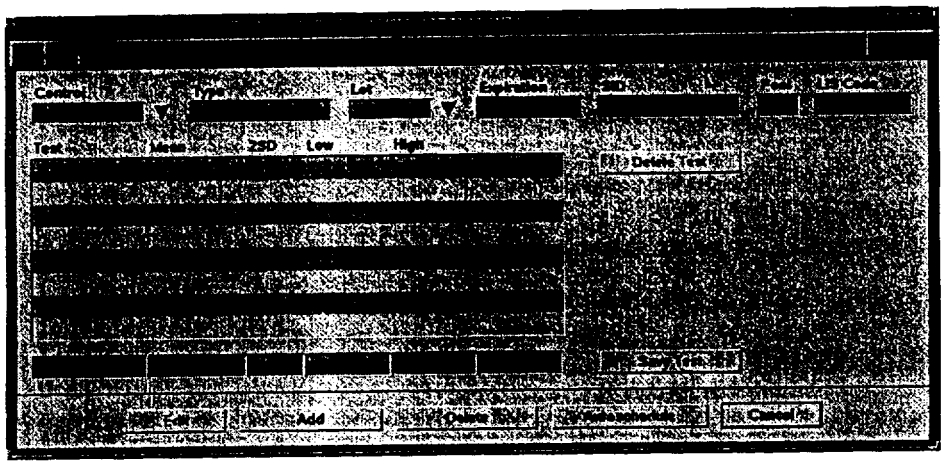

3. Select **Add.**
4. Select or enter a **Control.**
5. Select a **Type.**
6. Select or enter a **Lot.**
7. Select or enter in the fields below the table:
   a. Select a test.
   b. Select the mean and 2SD for the test.
8. Select **Save Test.**
9. Repeat steps 7 and 8 until the control definition is complete.
10. Select **Save.**

178

FO 181

Editing a QC Definition

1. At the workspace, select **Quality Control**.
2. Select **Control Definition**.
3. Select a **Control** and a **Lot**.
4. Select **Edit**.

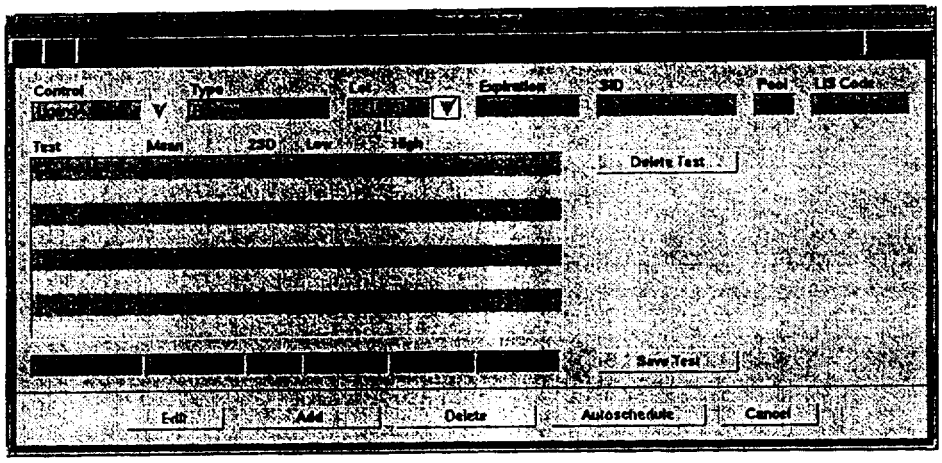

5. You can edit:
   - expiration date
   - SID
   - pool number
   - LIS Code
6. Select a test.
7. You can edit the mean or 2SD in the fields below the table:
   a. Select **Edit**.
   b. Edit the mean or 2SD.
   c. Select **Save Test**.
8. Repeat steps 6 and 7 to edit the mean or SD for other tests.
9. Select **Save**.
10. Select **Continue**.

Deleting a Control or a Test

1. At the workspace, select **Quality Control**.

179

181

2. Select **Control Definition**.

If you want to . . .	*Then . . .*
delete a control definition	a. Select a **Control** and a **Lot**. b. Select **Delete**.
delete a test for a control	a. Select a **Control** and a **Lot**. b. Select a test. c. Select **Edit Test**. d. Select **Delete Test**. e. Select **Yes**.

3. Select **Save**.
4. Select **Yes**.

Printing a QC Definition

1. At the workspace, select **Quality Control**.
2. Select **Control Definition**.
3. At the workspace, select the **Print** symbol.
4. Select **Report Options**.
5. Select the report.
   The system prints the report.

180

Performing QC

Use the procedures in this section to schedule controls, review QC data, review statistical summaries, edit QC data, and print reports.

Run a minimum of three levels of QC material at least once during each 8 or 24 hour shift, depending on the assay. If your established QC program requires more frequent use of controls, then follow those procedures. Refer to the ACS assay product inserts for specific QC recommendations for each assay.

Scheduling Controls

1. At the workspace, select **Worklist**.
2. Select **Schedule**.
3. Select **Control**.

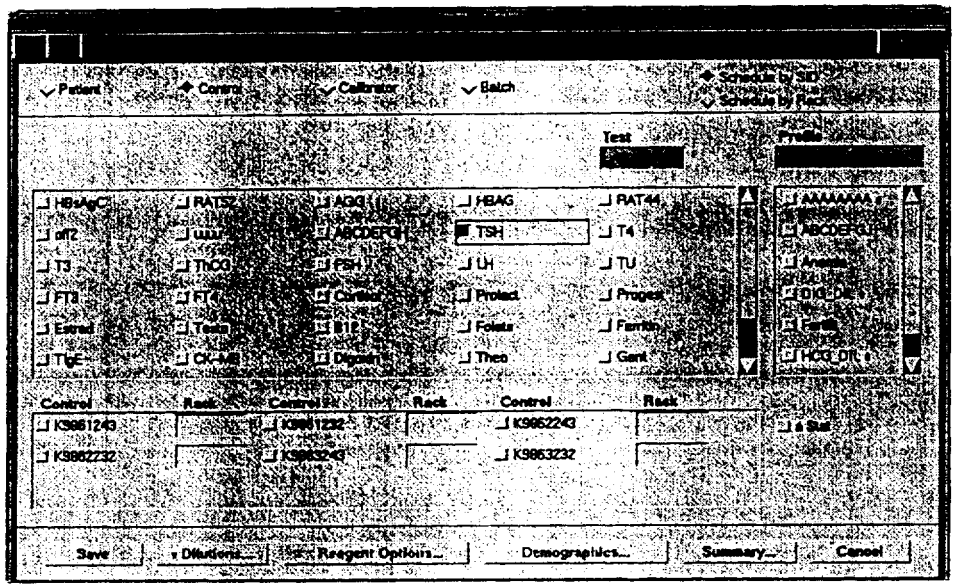

4. Enter or select the appropriate profiles or tests.
5. Select a control.
6. You can select the following options:
   - enter the **Rack**.
   - select **Stat**.
7. Select **Save**.
8. You can repeat steps 4 through 7 to schedule additional controls.
9. Install sample cups of QC material in the racks.

184

173

10. Install the racks in the sample entry queue, as described in *Processing the Samples* in Section 6.

Autoscheduling Controls

1. At the workspace, select **Quality Control**.
2. Select **Control Definition**.
3. Select a control.
4. Select a lot.
5. Select **Autoschedule**.
6. Select **Continue**.
7. Select **Save** and then select **Yes** to save the changes.

Reviewing QC Data

You can review QC data points and statistics, Levey-Jennings charts, and monthly and lot-to-date statistical summaries.

Reviewing QC Data Points and Statistics

The system stores up to 300 data points for each combination of tests and control lots.

1. At the workspace, select **Quality Control**.
2. Select **Data**.

182

3. Enter the criteria for the data that you want to display.

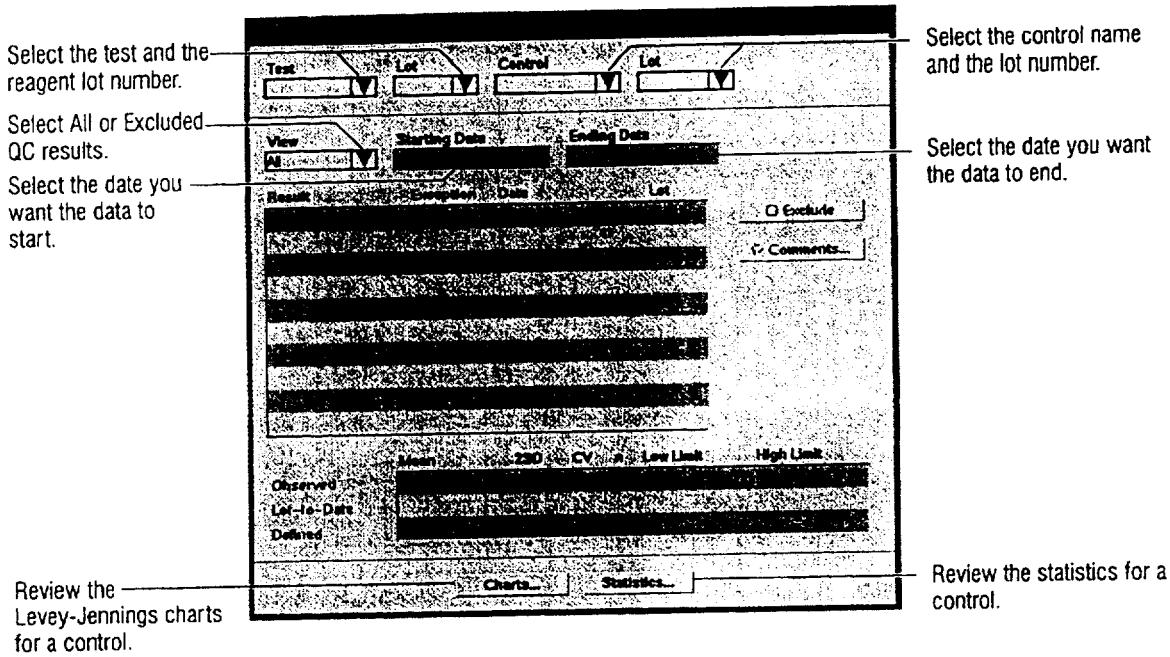

4. Review the results, exceptions, and statistics.
5. You can add a comment:
   a. Select a result.
   b. Select **Comments**.
   c. Enter up to three comments. The system enters your initials and date.
   d. Select **Save**.

Reviewing Levey-Jennings Charts

Each Levey-Jennings chart displays up to 90 data points, the mean, and three standard deviations. The ACS system stores up to 300 data points for each combination of tests and controls.

1. At the workspace, select **Quality Control**.
2. Select **Charts**.

183

3. Select a display option.

If you want to display data points . . .	*Then . . .*
for one test and up to three controls	a. Select **Test** in **View**. b. Select the test you want to display in **Test**. c. For each chart, select the control. d. For each chart, select **Defined** or **Observed**.
for one control and up to three tests	a. Select **Control** in **View**. b. Select the control you want to display in **Control**. c. For each chart, select the test. d. For each chart, select **Defined** or **Observed**.

4. You can change the starting date or ending date of the charts by selecting the starting date or ending date arrows at the lower corners of the charts.
5. You can display chart details:
   a. Select a data point.
   b. Select **Details**.
6. You can display additional data:
   a. Select a data point.
   b. Select **Data**.

Reviewing QC Statistical Summaries

Use this procedure to review cumulative monthly and lot-to-date statistics for a selected test and control.

1. At the workspace, select **Quality Control**.

184

2. Select **Statistics**.

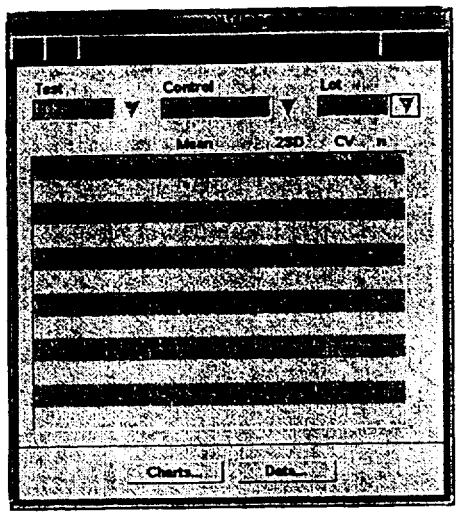

3. Select a test.
4. Select a control name.
5. Select a control lot number.

Editing QC Data Points and Statistics

The system stores up to 300 data points for each combination of tests and control lots.

1. At the workspace, select **Quality Control**.
2. Select **Data**.
3. Enter the criteria for the data you want to display:
   a. Select a test.
   b. You can select a test lot number.
   c. Select a control.
   d. You can select a control lot number.
   e. You can select **Excluded** in **View**.
   f. Select the starting date and the ending date.
4. Review the results, exceptions, and statistics.

185

47 188

5. Select the result.

If you want to . . .	*Then . . .*
exclude a result	Select **Exclude**.
include an excluded result	Select **Include**.
add a comment about a result	a. Select **Comments**. b. Enter up to three comments. The system enters your initials and the date. c. Select **Save**.

Printing QC Reports

1. Open the QC window that contains the data you want to print.
2. At the workspace, select the **Print** symbol.
3. Select **Report Options**.
4. Select the QC report.
   The system prints the report.

186

7 Maintenance

Daily Maintenance 7-5
Daily Cleaning Procedure 7-5
Replacing the Water Bottle 7-5

Weekly Maintenance 7-6
Cleaning the Water Bottle and Water Reservoir 7-6
Cleaning the Sample Tip Waste Area 7-9

Monthly Maintenance 7-13
Performing the Monthly Cleaning Procedure 7-13
Cleaning the Reagent Probes 7-15
Cleaning the Ancillary Probe 7-17
Cleaning the Aspirate Probes 7-18
Cleaning the Cuvette Waste Area 7-19
Cleaning the Air Filter 7-24

As-Needed Maintenance 7-27
Replacing the Cleaning Solution 7-27
Cleaning the Probe Rinse Stations 7-28
Cleaning the Reagent Probe Shutter 7-29
Cleaning the Primary Reagent Compartment and Reagent Slides 7-30
Cleaning the Covers and Pointing Device 7-31
Cleaning the Sample Racks 7-31

Accessing Maintenance Information 7-3
Using the Maintenance Schedule 7-3
Using the Maintenance Log 7-3
Accessing Online Maintenance Procedures 7-4
Printing the Maintenance Schedule 7-4

187

Accessing Maintenance Information

Use this section to perform the following tasks:

- use the maintenance schedule
- use the maintenance log
- access online maintenance procedures
- print the maintenance schedule

Using the Maintenance Schedule

The ACS:Centaur system provides a maintenance schedule that lists the maintenance tasks.

1. At the workspace, select the **Maintenance** symbol.

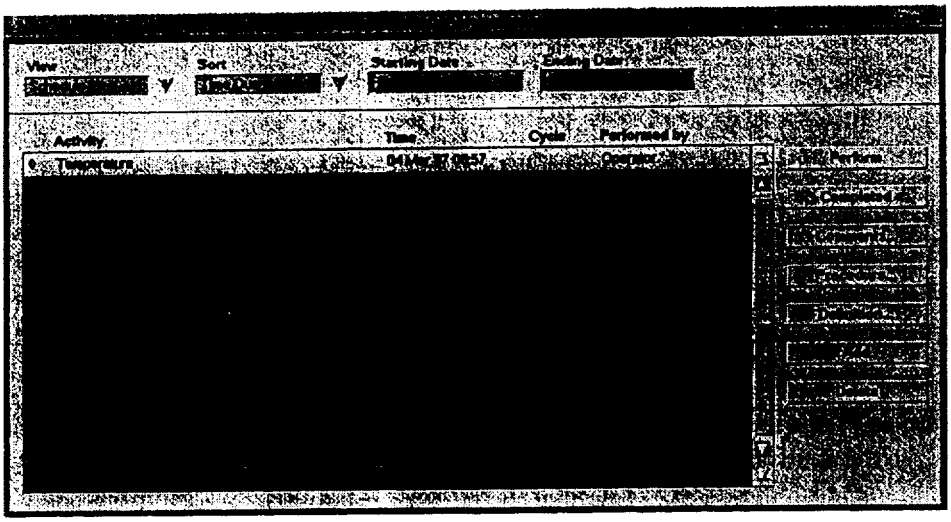

2. Select **Schedule** in View.

Using the Maintenance Log

The ACS:Centaur system provides a maintenance log to update a maintenance task after you complete a task.

1. At the workspace, select the **Maintenance** symbol.

188

160 191

2. Select **Log** in View.

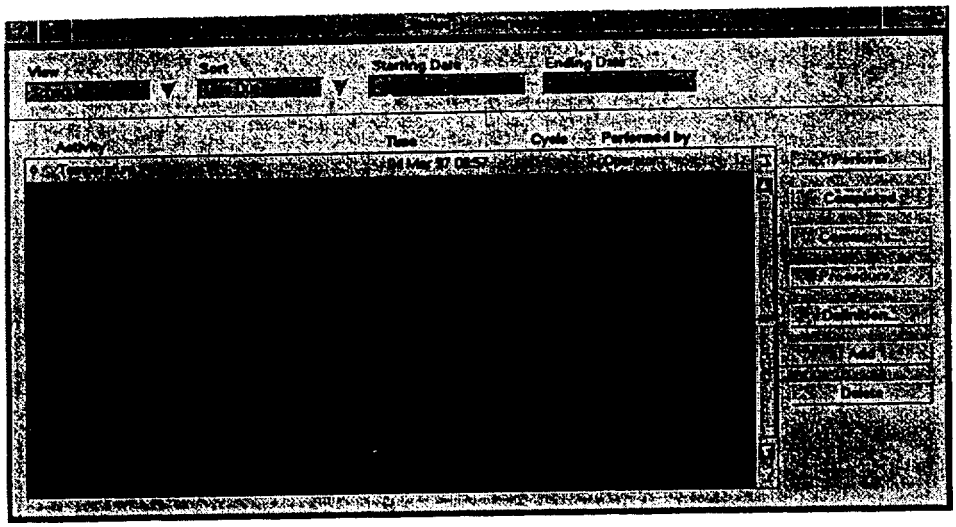

3. Select a task.
4. Enter your initials in Initials.
5. Select **Save**.

Accessing Online Maintenance Procedures

Maintenance activity information provides a brief procedure on how to perform the maintenance activity.

Select a maintenance activity in the Status–Maintenance window and then select **Procedure** to access information about a maintenance activity. You can select **Figure** to display an illustration of the procedure.

Weekly, Monthly, and As-Needed Procedures provide detailed procedures and illustrations.

Printing the Maintenance Schedule

1. At the workspace, select the **Maintenance** symbol.
2. Ensure that **Schedule** is selected in View.
3. At the workspace, select **Print**.
4. Select **Maintenance Schedule**.

Daily Maintenance

Daily maintenance includes the following procedures:

- daily cleaning procedure
- replacing the water bottle

Daily Cleaning Procedure

You can start the daily cleaning procedure at any time. Allow approximately xx minutes to complete the wash cycle and approximately xx minutes to complete the rinse cycle.

NOTE: You cannot process samples while the cleaning procedure is in progress.

The cleaning procedure cleans the probes, the rinse bowls, and the rinse stations. To optimize effectiveness of the cleaning procedure and enhance system performance, schedule the cleaning procedure after your peak workload.

⚠ **CAUTION:** Choosing not to perform the cleaning procedure can result in bacterial contamination, paramagnetic particle buildup, protein buildup, and crystallization, which can affect patient results.

1. At the workspace, select the **Maintenance** symbol.

   Ensure that the View is Schedule.

2. Select **Daily Cleaning Procedure**.

3. Select **Perform**.

   The system starts the cleaning procedure.

   NOTE: If the cleaning procedure stops before it completes, the system prevents you from testing samples until it completes the cleaning procedure or completes a rinse cycle.

4. If the cleaning procedure stops before it completes, select **Rinse**.

Replacing the Water Bottle

1. Remove and empty the water bottle as described in section 4, *Operating the System*.
2. Rinse the water bottle with reagent water, and invert the bottle to dry.
3. Fill the spare water bottle with reagent water.
4. Install the spare, full water bottle on the system.

190

10 ✓ 192

Weekly Maintenance

Weekly maintenance includes the following procedures:

- cleaning the water bottle and water reservoir
- cleaning the sample tip waste area

The following reagents and supplies are required:

- Chiron Diagnostics Cleaning Solution
- small bottle brush
- lint-free tissues or gauze
- clean, dry sample tip waste tube

Ensure that the system is off by selecting System Status, and then Turn Off System.

Cleaning the Water Bottle and Water Reservoir

WARNING Cleaning solution contains sodium hypochlorite. When handling the cleaning solution, follow appropriate chemical safety guidelines, which include wearing gloves, protective eye shield, and a laboratory coat.

1. Remove the water bottle.

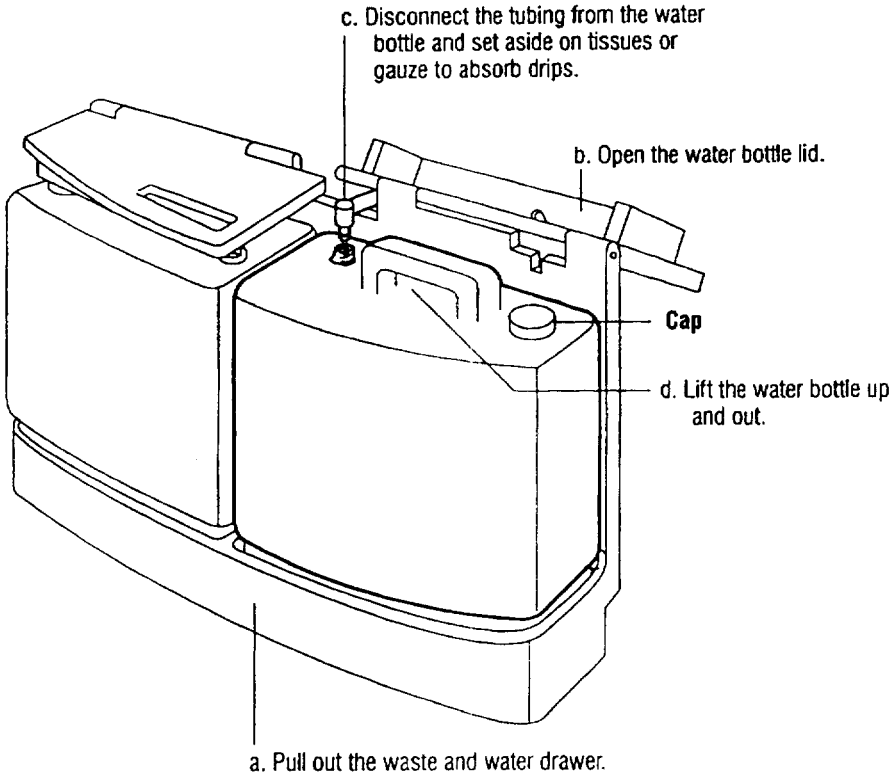

191

2. Remove the cap and empty any water from the water bottle.
3. Remove the water reservoir:

CAUTION: Handle the sensors gently because they are fragile.

CAUTION: To avoid crimps, grasp the fitting on the top of the reservoir. Do not grasp the tubing.

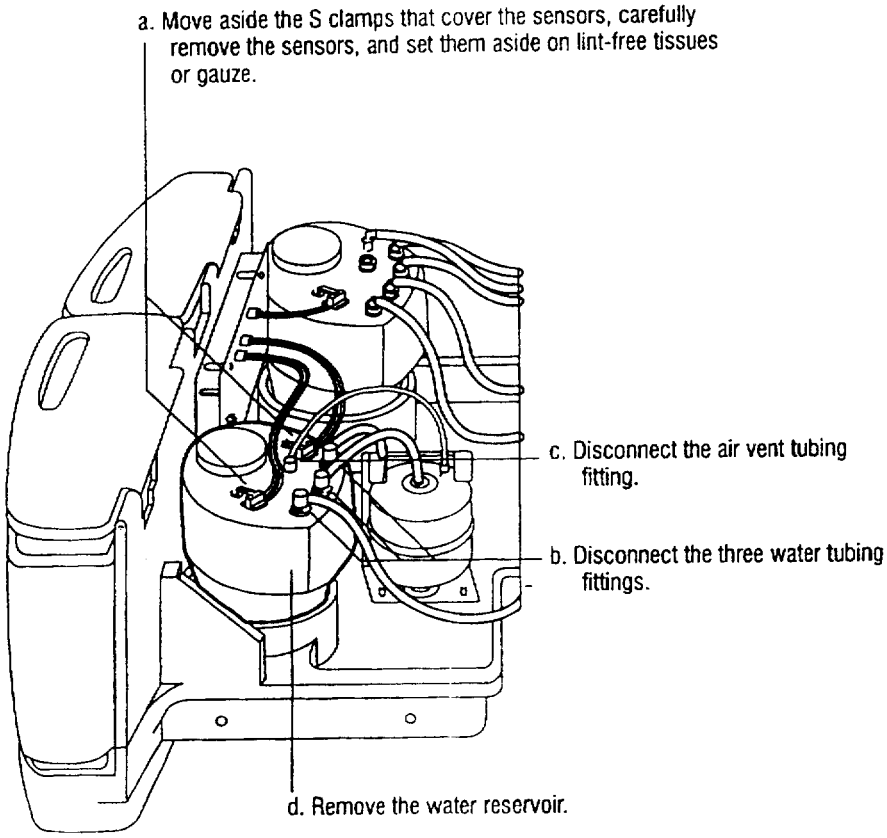

4. Remove the cap and empty any water from the reservoir.

CAUTION: Residual cleaning solution in the water reservoir tubing can affect assay performance. Ensure that the water reservoir is rinsed thoroughly with fresh reagent water after performing the cleaning procedure.

5. Clean the water reservoir:
   a. Pour approximately 1 L of cleaning solution into the reservoir.
   b. Place the cap on the bottle and close tightly.
   c. Swirl the solution around the inside of the reservoir a few times.
   d. Press a thick wad of gauze over the holes in the top of the reservoir, invert the reservoir, swirl the solution a few times, and return the reservoir to the upright position.
   e. Soak the reservoir for 5 minutes.
   f. Repeat steps c through e.

198

g. Swirl the solution again and then empty it.

h. Remove the cap and wipe the inside of the cap with cleaning solution.

i. Thoroughly rinse the inside of the reservoir and the cap at least five times with fresh reagent water.

j. Press some gauze over the holes in the top of the reservoir, invert the reservoir, swirl the water, and return the reservoir to the upright position.

k. Repeat step j once.

6. Add fresh reagent water to the reservoir until it is 3/4 full, and install the cap on the reservoir.

7. Install the water reservoir:

   a. Place the water reservoir in the waste and water drawer.

   NOTE: Ensure that the sensor tips are thoroughly cleaned and rinsed.

   b. Wipe the sensors with lint-free tissues or gauze saturated with cleaning solution.

   c. Wipe the sensors with lint-free tissues or gauze saturated with reagent water.

   d. Install the sensors in the top of the reservoir.

   e. Secure the sensors with the S clamps.

   f. Connect the air vent tubing and three water tubing fittings to the correct positions on the top of the reservoir.

8. Fill the spare, clean water bottle with fresh reagent water and install the cap.

9. Install the spare, full water bottle:

   a. Place the water bottle in the waste and water drawer.

   b. Connect the water bottle tubing to the bottle.

   c. Lower the water bottle lid.

⚠ **CAUTION:** Residual cleaning solution in the water bottle tubing can affect water filter and assay performance. Ensure that the water bottle is rinsed with fresh reagent water after performing the cleaning procedure.

10. Clean the water bottle:

    a. Pour approximately 1 L of cleaning solution into the water bottle.

    b. Place the cap on the bottle and close tightly.

    c. Swirl the solution around the inside of the bottle a few times, then invert and swirl, as in step 5d.

    d. Soak the bottle for 5 minutes.

    e. Repeat steps c and d.

    f. Swirl the solution again and then empty it.

    g. Rinse the inside of the bottle at least five times with fresh reagent water, and invert it to dry.

193

(b7

11. Push in the waste and water drawer.

Cleaning the Sample Tip Waste Area

The sample tip waste area includes the tip remover, tube, chute, and reservoir.

BIOHAZARD: Refer to Appendix A, *Protecting Yourself from Biohazards*, for recommended precautions when working with biohazardous materials.

WARNING Cleaning solution contains sodium hypochlorite. When handling the cleaning solution, follow appropriate chemical safety guidelines, which include wearing gloves, protective eye shield, and a laboratory coat.

1. Open the top cover.
2. Remove the sample tip remover and waste tube:
   a. Gently push the sample probe and ancillary probe toward the incubation ring.
   b. Loosen the knurled knob.
   c. Lift the tip remover and tube up and out of the system.

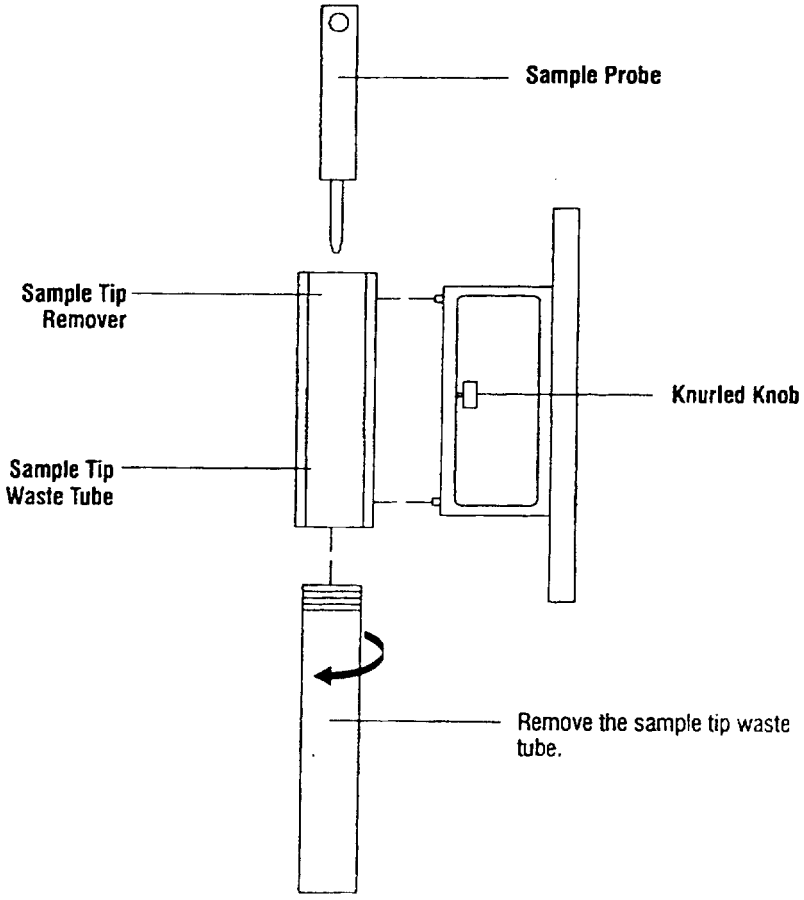

194

3. Clean the sample tip remover and waste tube:
   a. Unscrew the tube from the tip remover.
   b. Soak them in cleaning solution for 5 minutes.

   ⚠ **CAUTION:** Scrub gently to avoid splattering the material from the inside of the tube.

   c. Use a brush or sponge to clean the inside of the tube.
   d. Rinse the tip remover and tube with water, and set the tube aside to dry completely.
   e. Thoroughly dry the tip remover.
   f. Connect the tip remover to the spare waste tube.
4. Install the sample tip remover and waste tube:
   a. Place the bottom of the tube into the opening below the sample probe.
   b. With the slot on the tip remover facing away from you, align the two locator pins on the right side with the holes on the mounting block.
   c. Turn the knurled knob until the tip remover is secure.
5. Close the top cover.
6. Access the sample tip waste chute:
   a. Open the right waste door.
   b. Remove and empty the sample tip waste bin.
   c. Pull out the drawer.
   d. Lift the lid to the cleaning solution bottle.
   e. Remove the cleaning solution bottle.

⚠ **CAUTION:** Avoid touching the cleaning solution tubing. Cleaning solution can drip from the tubing.

7. Remove the sample tip waste chute.

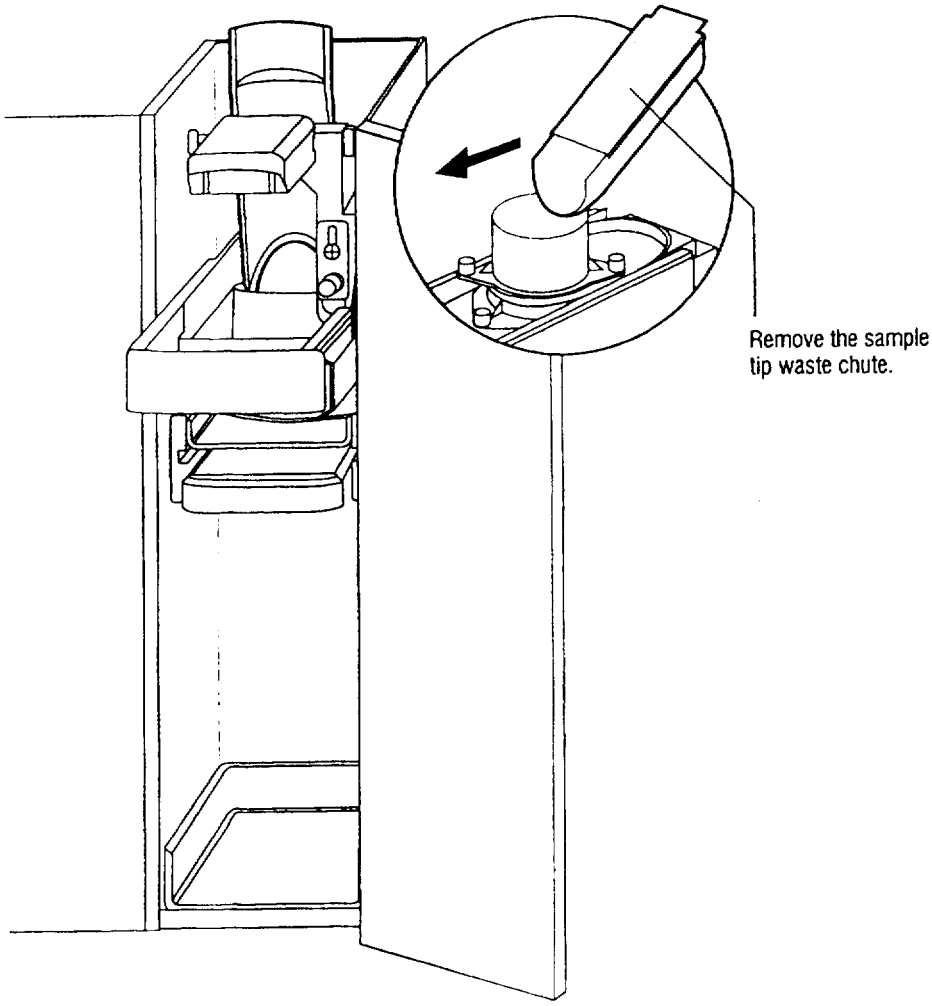

8. Clean the sample tip waste chute and the sample tip waste reservoir:
   a. Soak both parts of the chute in cleaning solution for 5 minutes.
   b. While the chute is soaking, wipe the sample tip waste reservoir with tissues or gauze saturated with cleaning solution.
   c. Wipe the reservoir with tissues or gauze saturated with water.
   d. Dry the reservoir.

   ⚠ **CAUTION:** Scrub gently to avoid splattering the material from the inside of the tube.

   e. Use a bottle brush to clean the chute.
   f. Rinse the chute with water.
   g. Dry the chute.
9. Install the sample tip waste chute:
   a. Assemble the chute.

196

199

b. Align the pins on the top of the chute with the J hooks, and install the bottom of the chute in the reservoir.

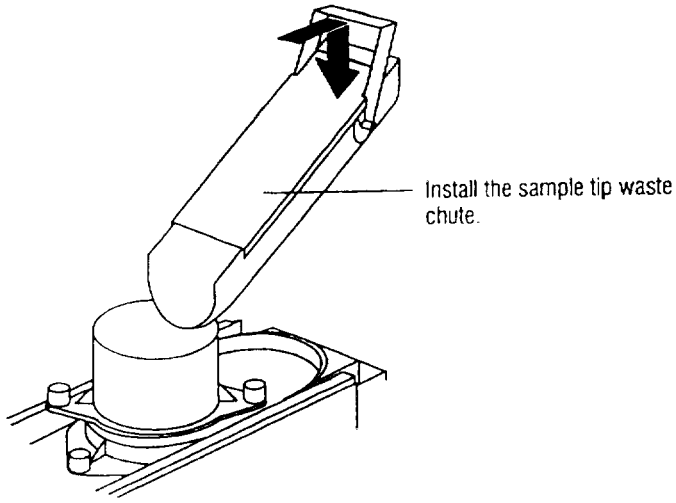

NOTE: You can replace the cleaning solution if it is low as described in *Replacing the Cleaning Solution.*

10. Install the cleaning solution bottle:
    a. Place the bottle in the drawer.
    b. Close the lid.
    c. Close the drawer.
11. Install the sample tip waste bin.
12. Close the right waste door.

Monthly Maintenance

Monthly maintenance includes the following procedures:

- performing the monthly cleaning procedure
- cleaning the reagent probes and ancillary probe
- cleaning the aspirate probes
- cleaning the cuvette waste area
- cleaning the air filter

The following reagents and supplies are required:

- approximately 3 L of cleaning solution
- at least 4 L of reagent water
- bottle brush
- lint-free tissues or gauze
- monthly cleaning tubing

Performing the Monthly Cleaning Procedure

Allow approximately 30 minutes to complete this procedure. You cannot use the system for testing during this procedure.

BIOHAZARD: Refer to Appendix A, *Protecting Yourself from Biohazards*, for recommended precautions when working with biohazardous materials.

WARNING Cleaning solution contains sodium hypochlorite. When handling the cleaning solution, follow appropriate chemical safety guidelines, which include wearing gloves, protective eye shield, and a laboratory coat.

1. Start the monthly cleaning procedure:
   a. At the workspace, select the **Maintenance** symbol.
      Ensure that the View is Schedule.
   b. Select **Monthly Cleaning Procedure**.
   c. Select **Perform**.
   The system starts the cleaning procedure by emptying the waste reservoir.
2. When the waste reservoir is empty, add cleaning solution to the water bottle:
   a. Remove the water bottle.
   b. Add approximately 4 L of cleaning solution to the water bottle.
   c. Install the water bottle.
3. Empty the water reservoir and the waste bottle:

a. Remove the water reservoir and the waste bottle.
b. Empty the water reservoir and the waste bottle.
c. Install the water reservoir and the waste bottle.

4. Remove the water filter:
   a. Disconnect the air vent tubing from the top of the water filter.
   b. Disconnect the upper and lower filter fittings from the filter.
   c. Remove the filter.
   d. Connect the upper and lower fittings to each other.

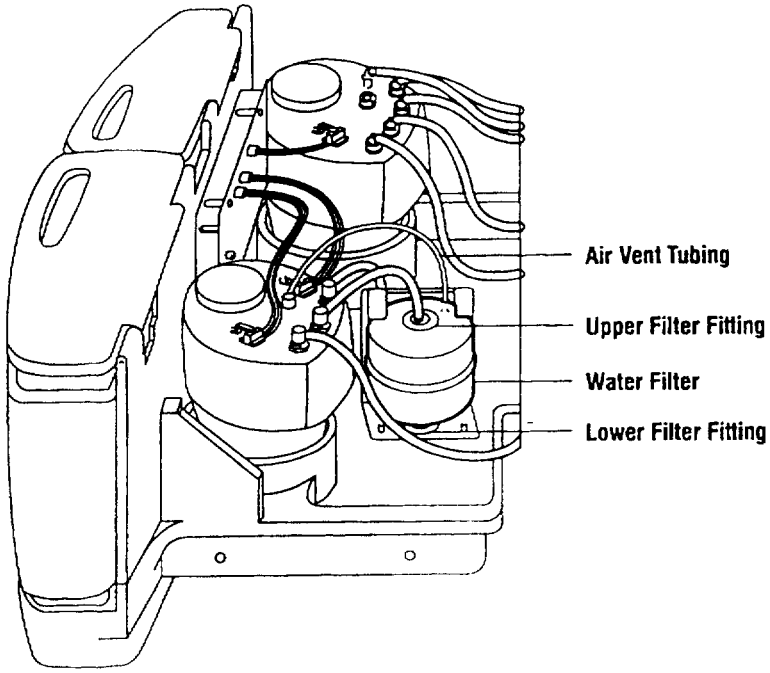

5. Connect the monthly cleaning tubing to the waste reservoir and to the quick disconnect (located between valve 66 and valve manifold).
   a. Select **Continue**.
6. When prompted, add reagent water to the water bottle:
   a. Remove and thoroughly rinse the water bottle with reagent water.
   b. Add approximately 2 L of reagent water to the water bottle.
   c. Install the water bottle.
   d. Select **Continue**.
7. When prompted, rinse the water bottle and the water reservoir, and add reagent water to the water bottle:
   a. Remove the water bottle and the water reservoir.

199

b. Thoroughly rinse the water bottle and the water reservoir with reagent water.
c. Add approximately 2 L of reagent water to the water bottle.
d. Install the water bottle and the water reservoir.
e. Select **Continue**.

8. When prompted, rinse the water bottle and the water reservoir:
   a. Remove the water bottle and the water reservoir.
   b. Thoroughly rinse the water bottle and the water reservoir with reagent water.
   c. Fill the water bottle with reagent water.
   d. Install the water bottle and the empty water reservoir.
   e. Select **Continue**.
9. When prompted, remove the monthly cleaning tubing:
   a. Disconnect the monthly cleaning tubing.
   b. Reconnect the valve manifold water fitting.
   c. Select **Continue**.

   The system primes the water reservoir and the water filter.

Cleaning the Reagent Probes

BIOHAZARD: Refer to Appendix A, *Protecting Yourself from Biohazards*, for recommended precautions when working with biohazardous materials.

WARNING The probe tips are sharp and can cause skin punctures. Be careful not to bend the probes.

NOTE: Ensure that the system is off by selecting System Status, and then Turn Off System.

1. Lift the top cover.

300

2. Remove the reagent probes cover.

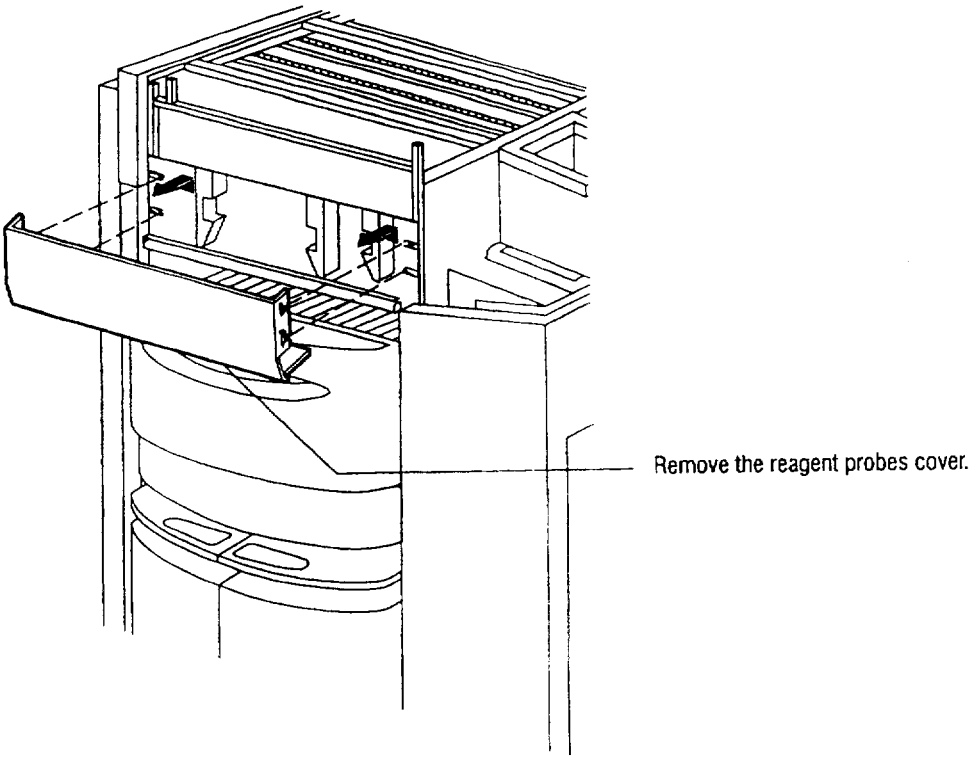

3. Clean the three reagent probes:
   a. Push the probes toward the incubation ring.
   b. Check the probe tip for damage. If a probe is damaged, replace the probe.
   c. Wipe each probe using a downward motion with lint-free tissues or gauze saturated with cleaning solution.

CAUTION: Thoroughly rinse the probe, especially the middle and top of the probe. Residual cleaning solution can affect assay performance or damage the probe.

201

175 204

d. Wipe each probe using a downward motion with lint-free tissues or gauze saturated with reagent water.

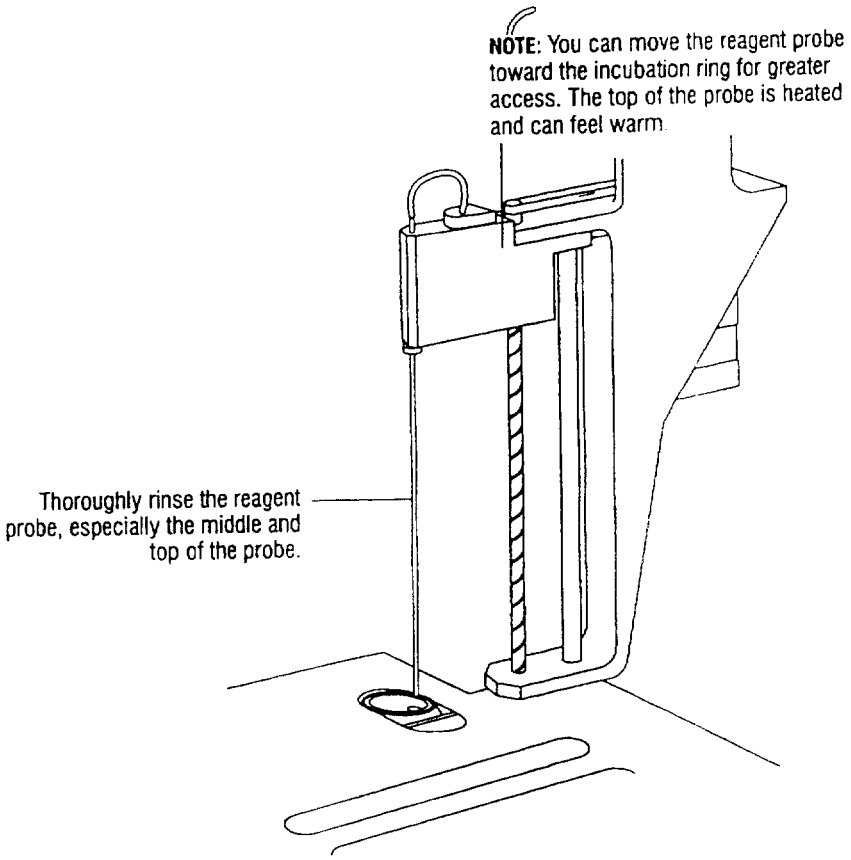

4. Install the reagent probes cover.

Cleaning the Ancillary Probe

BIOHAZARD: Refer to Appendix A, *Protecting Yourself from Biohazards*, for recommended precautions when working with biohazardous materials.

WARNING The probe tips are sharp and can cause skin punctures. Be careful not to bend the probes.

NOTE: Ensure that the system is off by selecting System Status, and then Turn Off System.

1. Lift the top cover.
2. Clean the ancillary probe:
   a. Check the probe tip for damage. If the probe is damaged, replace the probe.

b. Wipe the probe using a downward motion with lint-free tissues or gauze saturated with cleaning solution.

c. Wipe the probe using a downward motion with lint-free tissues or gauze saturated with reagent water.

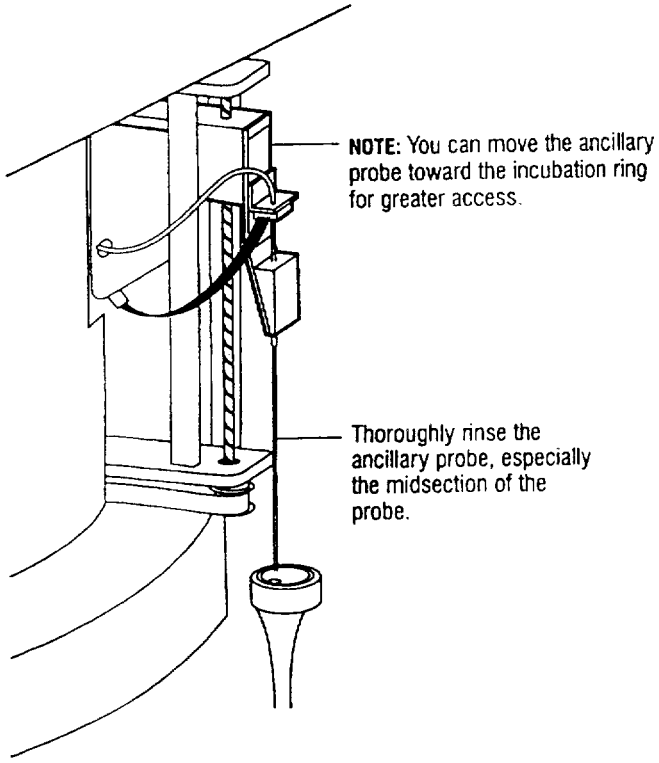

Cleaning the Aspirate Probes

BIOHAZARD: Refer to Appendix A, *Protecting Yourself from Biohazards*, for recommended precautions when working with biohazardous materials.

WARNING The probe tips are sharp and can cause skin punctures. Be careful not to bend the probes.

CAUTION: Ensure that you do not crimp the tubing. Crimped tubing can affect assay performance.

NOTE: Ensure that the system is off by selecting System Status, and then Turn Off System.

1. Carefully lift the probe arm up to the highest position.
2. Wipe the probe with lint-free tissues or gauze saturated with cleaning solution.

203

3. Wipe the probe with lint-free tissues or gauze saturated with reagent water.

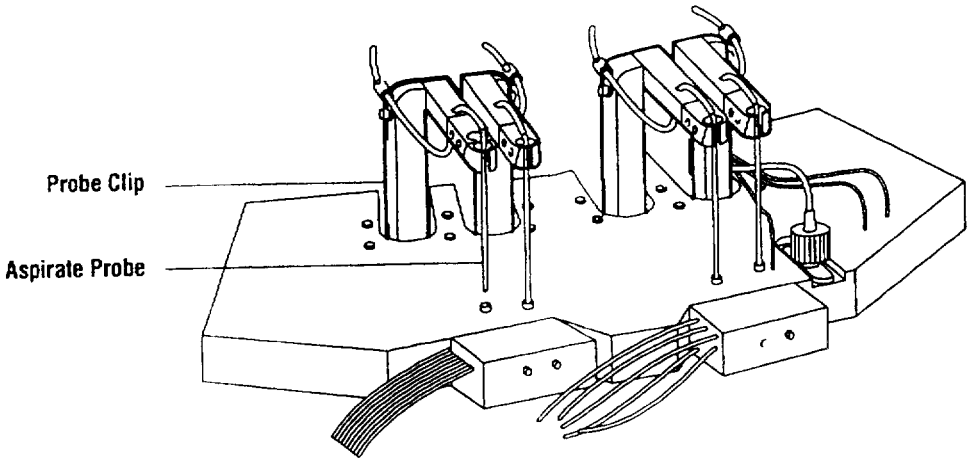

CAUTION: Ensure that each probe clip is in its locked position to hold the probe firmly in place. Failure to do so will cause damage to the probe.

4. Close the top cover.

Cleaning the Cuvette Waste Area

BIOHAZARD: Refer to Appendix A, *Protecting Yourself from Biohazards*, for recommended precautions when working with biohazardous materials.

NOTE: Ensure that the system is off by selecting System Status, and then Turn Off System.

1. Remove the left waste door.

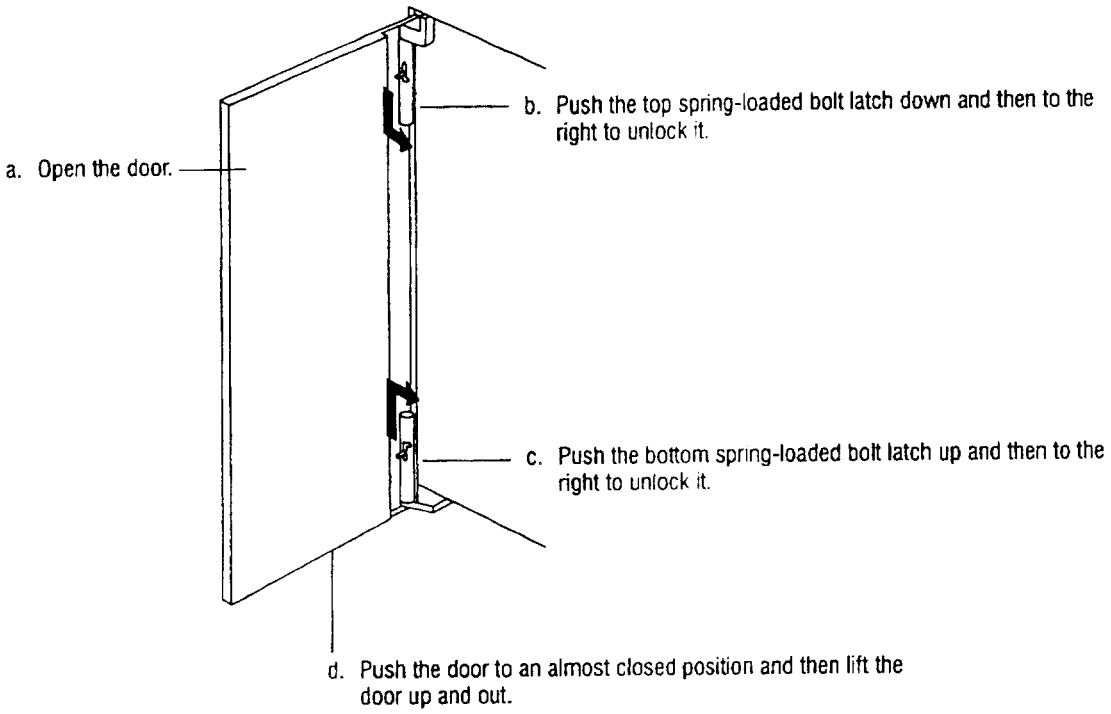

2. Remove any empty sample tip trays and covers from the tip tray bin.

205

171 208

3. Remove the tip tray bin.

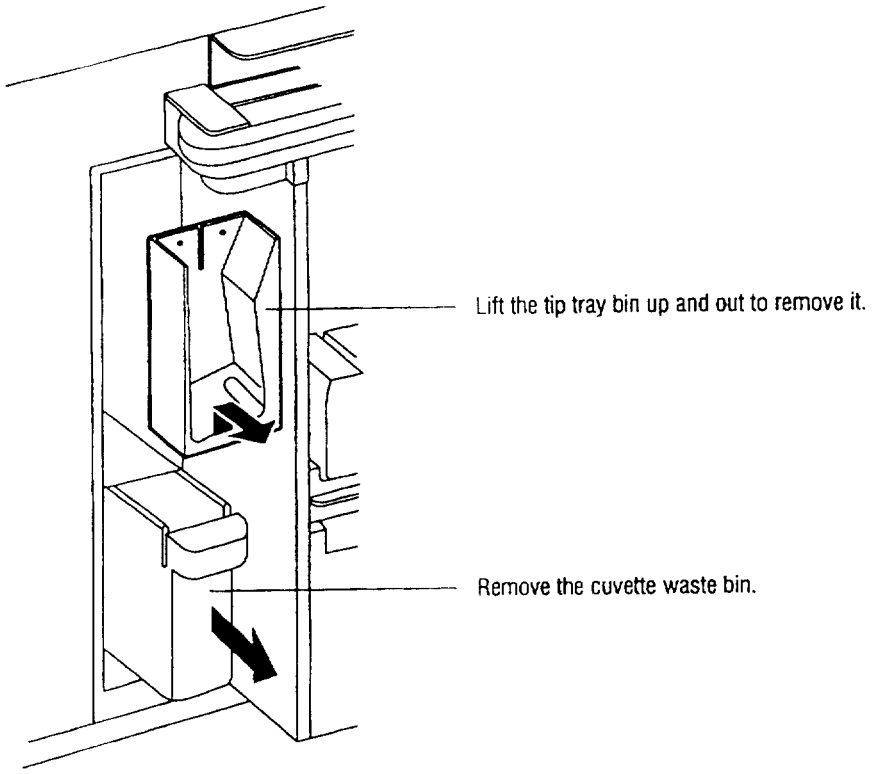

4. Remove the cuvette waste bin and empty it.

206

5. Remove the cuvette waste chute.

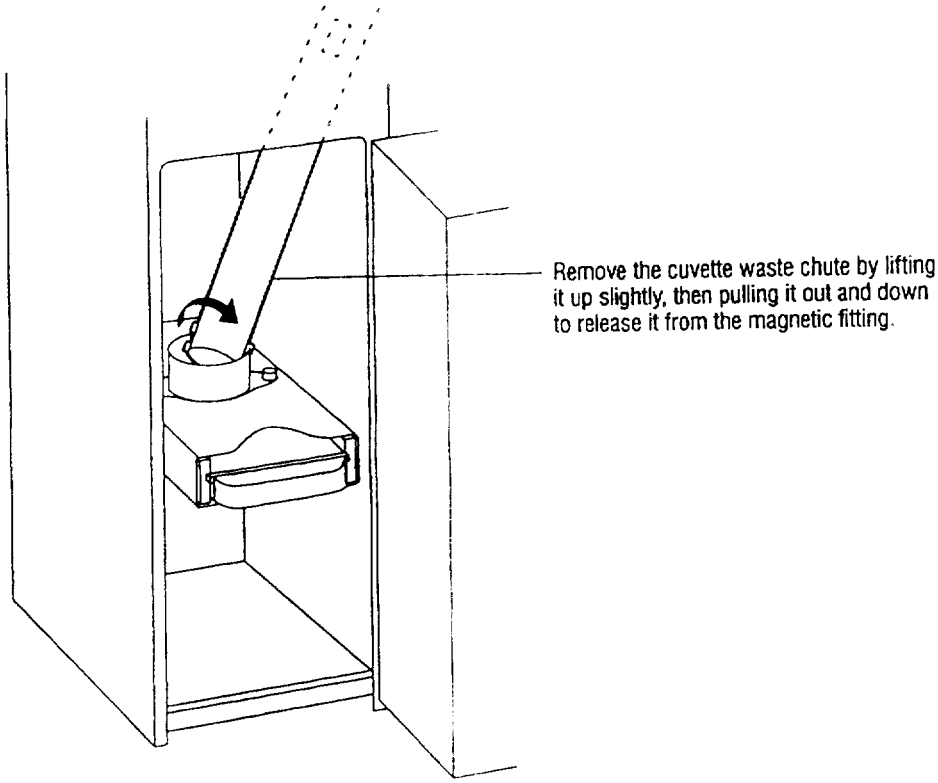

6. Clean the cuvette waste reservoir:
   a. Open the cuvette waste bin drawer.
   b. Wipe the reservoir with tissues or gauze saturated with cleaning solution.
   c. Rinse the reservoir with tissues or gauze saturated with reagent water.

207

170

d. Dry the reservoir.

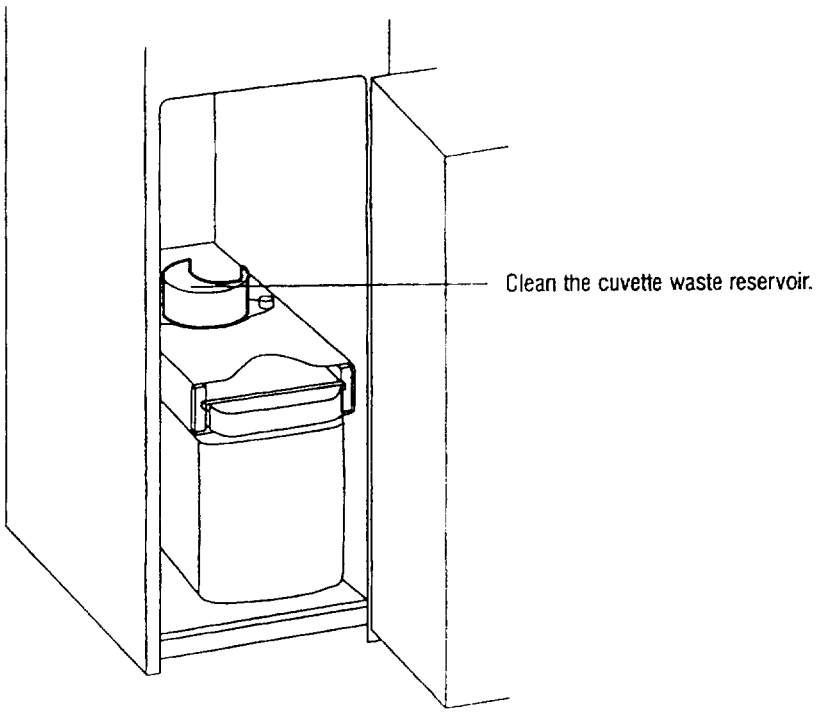

7. Clean the cuvette waste chute:
   a. Use a bottle or sponge brush to clean the chute.
   b. Rinse the chute with water.
   c. Thoroughly dry the chute.

⚠ **CAUTION:** Ensure that you do not pinch or trap cables or tubing when installing the chute.

8. Install the cuvette waste chute:
   a. Place the locator pins at the bottom of the chute in the reservoir.

208

b. Push up the top of the chute until it attaches to the magnetic fitting.

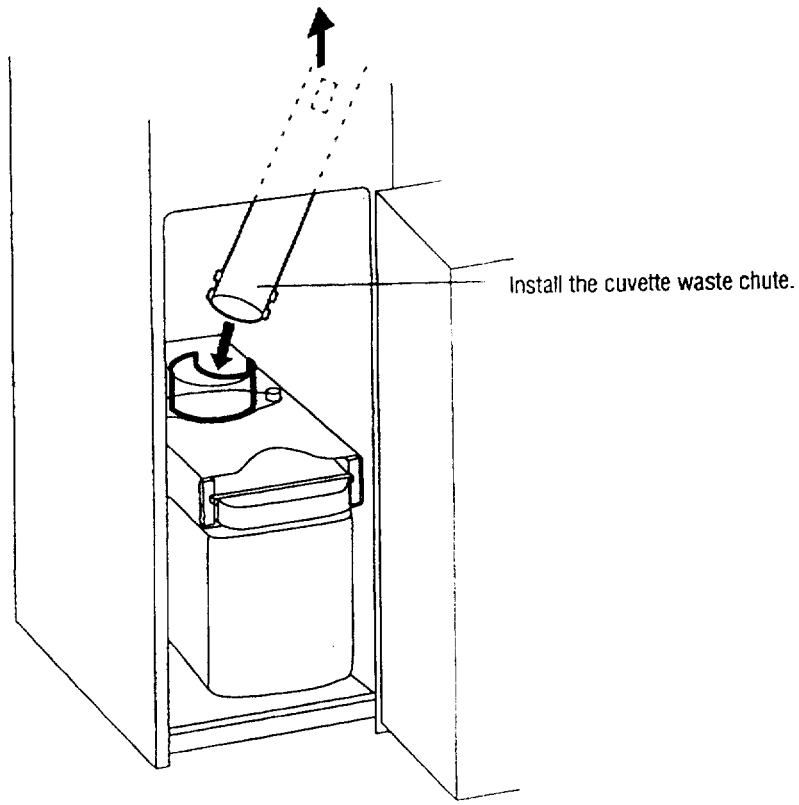

9. Install the tip tray bin.
10. Install the cuvette waste bin in the drawer and close the drawer.
11. Install the left waste door, lock the latches, and close the door.

Cleaning the Air Filter

NOTE: Ensure that the system is off by selecting System Status, and then Turn Off System.

1. Lift the top cover.
2. Remove the reagent probes cover and the panel over the water and waste module (reagent fluidics cover).

209

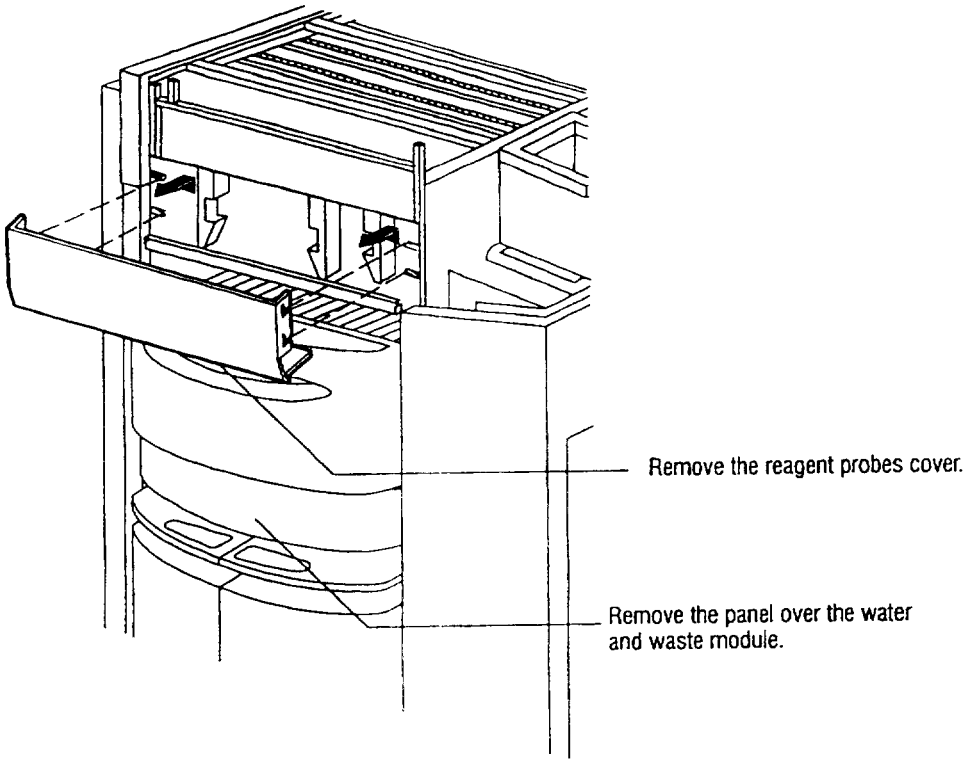

3. Remove the three screws on the back panel.
4. Carefully lift the back panel up, and then over and out to remove it.

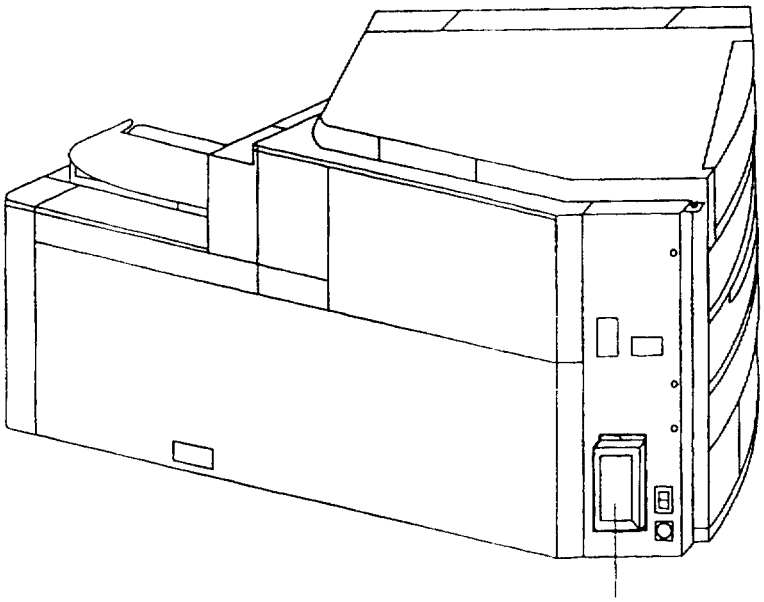

5. Pinch the air filter and remove it from the bracket.

210

CAUTION: Avoid rinsing the air filter with cleaning solution.

6. Rinse the air filter with water and allow it to dry thoroughly.

CAUTION: Do not install a wet or damp air filter.

7. Install the spare, dry air filter in the bracket.
8. Install the back panel and secure the three screws.
9. Install the reagent probes cover and the panel over the water and waste module (reagent fluidics cover).

211

As-Needed Maintenance

Use this section to replace the cleaning solution and to clean components when they are dirty.

You can clean the following components with cleaning solution:

- probe rinse stations
- reagent probe shutter
- primary reagent area and reagent slides
- covers and pointing device
- sample racks

Ensure that the system is off by selecting System Status, and then Turn Off System.

Replacing the Cleaning Solution

You can replace cleaning solution at any time.

WARNING Cleaning solution contains sodium hypochlorite. When handling cleaning solution, follow appropriate chemical safety guidelines, which include wearing gloves, protective eye shield, and a laboratory coat.

NOTE: Perform the recommended cleaning procedure using the Chiron Diagnostics Cleaning Solution for the ACS:Centaur system to achieve optimum assay and system performance. Do not use other cleaning solutions.

212

1. Open the right waste door.
2. Remove the cleaning solution bottle:

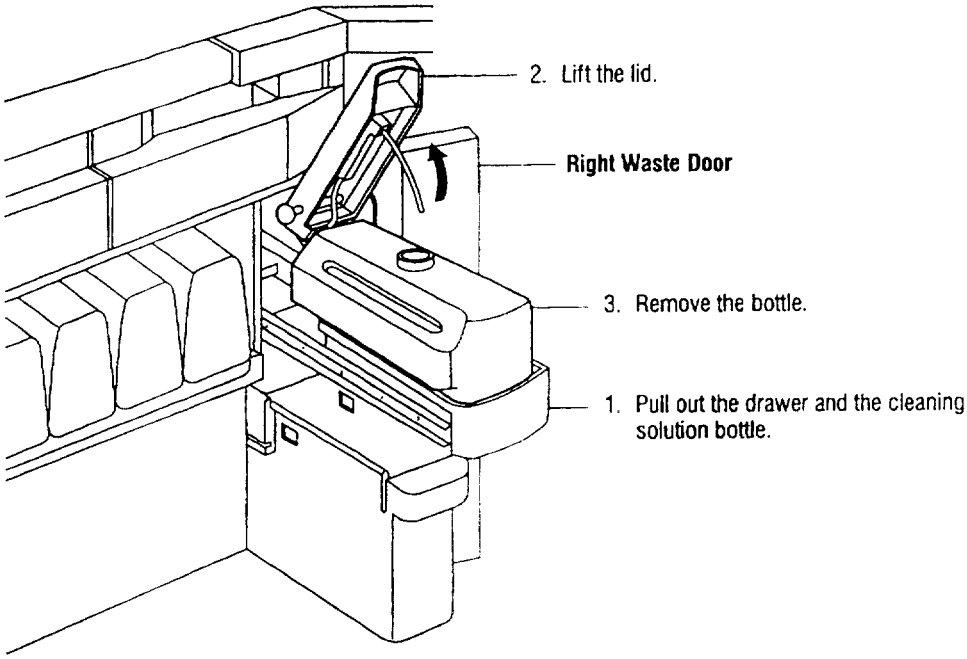

3. Remove the septum cap and empty any cleaning solution from the bottle.
4. Prepare the cleaning solution:
   a. Carefully pour a pack of concentrated Chiron Diagnostics Cleaning Solution into the cleaning solution bottle.
   b. Fill the bottle with reagent water.
   c. Place the septum cap on the bottle.
5. Install the bottle on the system.
6. Lower the lid onto the bottle, ensuring that the tubing is in the bottle.
7. Push in the drawer.
8. Close the right waste door.

Cleaning the Probe Rinse Stations

You can clean the rinse stations for the three reagent probes and the ancillary probe.

BIOHAZARD: Refer to Appendix A, *Protecting Yourself from Biohazards*, for recommended precautions when working with biohazardous materials.

WARNING The probe tips are sharp and can cause skin punctures. Be careful not to bend the probes.

213

1. Lift the top cover.
2. Use a disposable transfer pipette to add 0.5 to 1.0 mL of cleaning solution to the rinse stations.
3. Clean inside the rinse stations using a small bristle brush saturated with cleaning solution.
4. Gently insert the brush into the rinse station to a depth of 6.3 cm (2.5 in), and swirl the brush inside the rinse station.

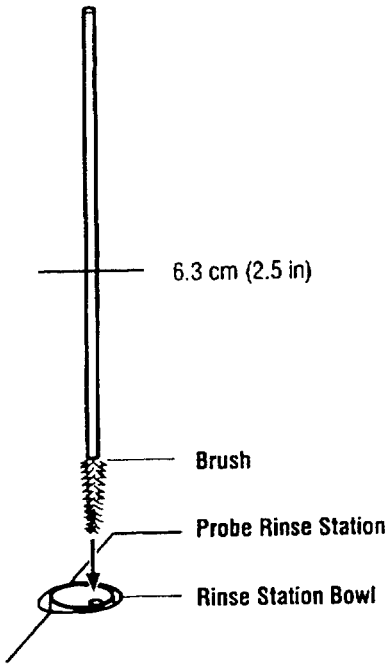

5. Remove the brush.
6. Clean the rinse station bowl.
7. Close the top cover.

Cleaning the Reagent Probe Shutter

BIOHAZARD: Refer to Appendix A, *Protecting Yourself from Biohazards*, for recommended precautions when working with biohazardous materials.

1. Remove the reagent probes cover.
2. You can push the probes toward the incubation ring.
3. Remove the reagent probe shutter:
   a. Lift the shutter drive arm up and off the shutter drive.
   b. Slide the shutter to the left until the screw slots are under the screws.

214

186

c. Lift out the shutter.

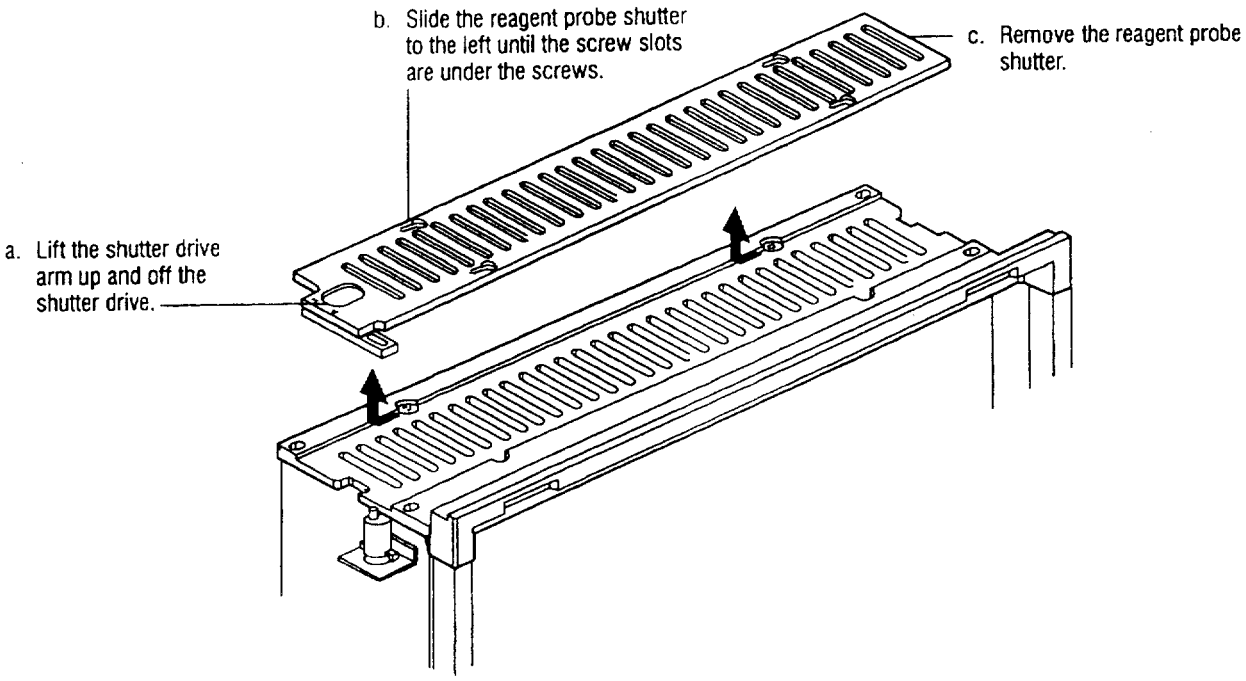

4. Clean the shutter:
   a. Soak the shutter in cleaning solution.
   b. Rinse the shutter with water.
   c. Thoroughly dry the shutter.
5. Wipe the surface under the shutter with tissues or gauze saturated with cleaning solution.
6. Wipe the surface under the shutter with tissues or gauze saturated with water.
7. Install the shutter.
8. Install the reagent probes cover.

Cleaning the Primary Reagent Compartment and Reagent Slides

BIOHAZARD: Refer to Appendix A, *Protecting Yourself from Biohazards*, for recommended precautions when working with biohazardous materials.

1. Open the primary reagent door.
2. Wipe excess water from the primary reagent compartment.

215

3. Wipe the surfaces of the primary reagent compartment with tissues or gauze saturated with cleaning solution.
4. If reagent has spilled onto the reagent slides, wipe the reagent slides with tissues or gauze saturated with cleaning solution.
5. Wipe the surfaces of the primary reagent compartment with lint-free tissues or gauze saturated with water.
6. Dry the primary reagent compartment.
7. Close the primary reagent door.

Cleaning the Covers and Pointing Device

BIOHAZARD: Refer to Appendix A, *Protecting Yourself from Biohazards*, for recommended precautions when working with biohazardous materials.

1. Carefully wipe the following components with tissues or gauze saturated with cleaning solution:
   - exterior covers
   - sample entry queue
   - sample exit queue
   - ancillary entry
   - Stat entry queue
   - pointing device
   - system fluids tray
   - tray under the system fluids reservoirs
   - tray under the water and waste bottles
2. Rinse the components with tissues or gauze saturated with water.

Cleaning the Sample Racks

BIOHAZARD: Refer to Appendix A, *Protecting Yourself from Biohazards*, for recommended precautions when working with biohazardous materials.

1. Soak the racks in cleaning solution for approximately 10 minutes.
2. Rinse the racks with water.
3. Allow the racks to dry thoroughly.
4. Ensure that each position on the rack has a clip.

210
150 219

If required, install clips in the rack.

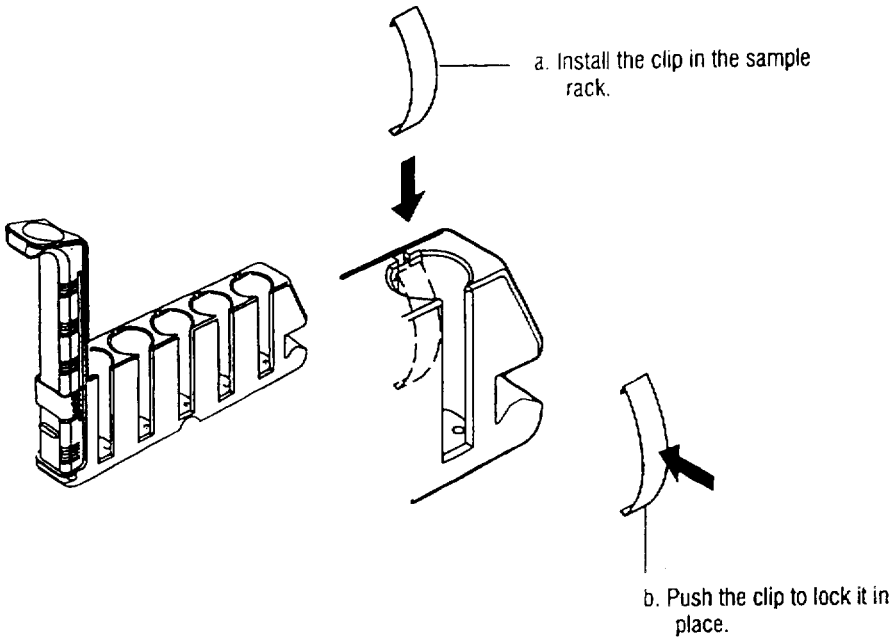

217

189

8 Troubleshooting

Investigating System Problems 8-3

Solving Event Codes 8-4

Investigating System Problems

Use this section to focus your efforts in resolving system problems.

NOTE: Component problems can affect calibrations, controls, patient results, precision, and proficiency testing.

1. Visually inspect the system.
   - Do you see evidence of leaks under or around the system? If aspirate probes 1 and 2 are reversed, then overfilling, leaks, and cuvette jams can result.
   - Do used cuvettes show complete aspiration and removal of solid pellet? A residual grey film on used cuvettes from Folate, TSH, FT4, and ThCG assays is acceptable.
   - Is there any crystallization of Base Reagent around the outside edges of the luminometer?
   - Do you see air bubbles in the tubing? Does tubing have any discoloration, obstructions, twists, crimps, nicks, severe angles, or other deformities and restrictions? Is tubing trapped between covers? Is the peristaltic pump tubing too tight, flat, or leaking?
   - Are probes clean on the outside? Are there any obstructions on the inside? Are probes straight and centered over the wash or rinse ports?
   - Do the water filters have air bubbles, debris, or leaks?
2. Select the System Status symbol and observe for patterns of red and yellow.
   - To investigate the status of system supplies, select Supplies.
   - To investigate the status of reagents, select Reagents.
   - To investigate the status of samples, select Samples.
   - To verify that the system received all required routine cleaning and maintenance, select Maintenance.
   - To view system events including errors and to access diagnostic procedures, select Event Log.
   - To perform manual operations and diagnostic tests, select Diagnostic Tools.

219

Solving Event Codes

Use this procedure to identify errors and access online information about possible causes and procedures.

1. At the Workspace, select the System Status symbol.
2. Select Event Log.

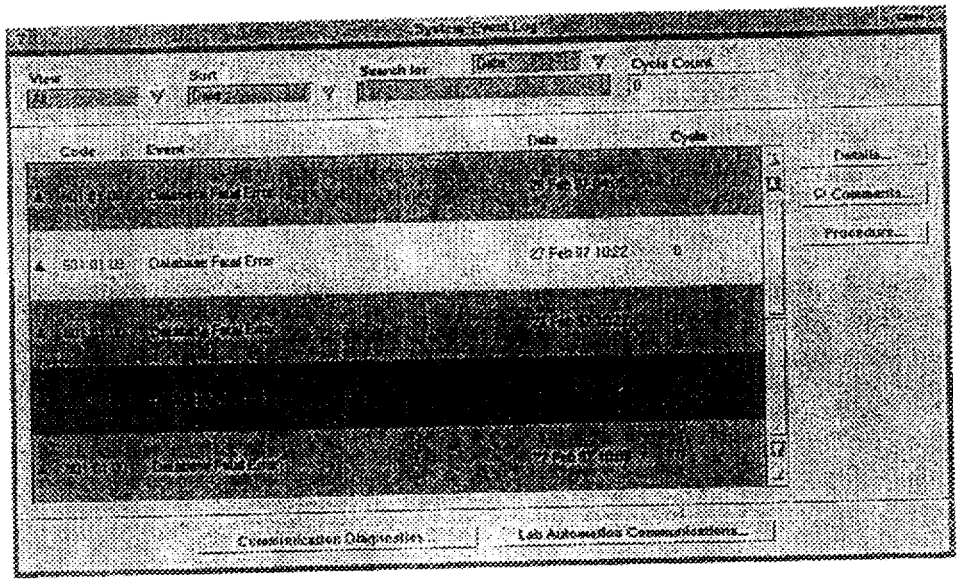

3. Select the appropriate view and complete the tasks to identify the event you want to solve.
   - To organize the events in chronological order with the most recent message at the top, select Date in Sort.
   - To organize the events by failures and warnings, select Severity in Sort.
   - To organize the events by subsystem, select Subsystem in Search.
   - To display a specific event code, select Event Code in Search, and then enter the event code.
4. Locate the possible causes and corrective action procedures for the error.
   a. Select Procedure.
   b. Select **Search** from the online information window.
   c. Enter the event code. **Enter**.
   d. Select **Enter**.
5. Perform the appropriate procedure.

   You can access detailed procedures and illustrations by selecting Procedure.
6. If the procedure does not correct the problem or if the problem occurs again, call Chiron Diagnostics.

9 Setup

Defining Test Options 9-3
Modifying Test Definitions 9-3
Modifying Reference Ranges 9-4
Defining Test Profiles 9-5
Defining Ratio Tests for Calculated Parameters 9-6
Defining Off-System Tests 9-7

Selecting Sample Handling Options 9-8
Selecting Sample Identification 9-8
Selecting Sample Aspirations 9-8
Selecting Sample Tube Types 9-8
Defining Repeats 9-9

Adjusting the Time 9-10

Defining Printing Options 9-11
Selecting a Printer 9-11
Selecting Paper Size 9-11
Entering a Report Header 9-12

Defining System Passwords 9-13

Defining Sample Barcode Options 9-14
Selecting the Barcode Symbology and Format 9-14
Defining Custom Barcode Labels 9-14

Defining LIS Communication Options 9-16

Defining Test Options

You can define and modify test options for the ACS:Centaur system:

- test definitions
- reference ranges
- test profiles
- ratio tests for calculated parameters
- off-system tests

Modifying Test Definitions

NOTE: Some tests have parameters that you cannot edit.

1. At the workspace, select **Setup**.
2. Select **Test Summary**.
3. Select a test.
4. Select **Definition**.
5. Select **Edit**.
6. Complete the appropriate tasks.

If you want to . . .	*Then . . .*
enter the test name that displays at the Worklist–Schedule window	enter the name in **Display**.
enter the test name on printed reports	enter the name in **Print**.
enter the LIS code for the test	enter the LIS code in **LIS Code**.
use a reagent beyond its expiration date	select **Use Beyond** or **Do Not Use Beyond** in Opened Stability.
enter the number of replicates for a patient or a control	select a number from 1 to 3 in **Replicates**.
review results before the system reports results	select **Hold** for Sample Repeat.
report a result without reporting the patient name or PID	select **Anonymous**.

329

1 of 2

If you want to . . .	*Then . . .*
edit qualitative result definitions	select **Result Calculation.**
enter the original system values for the definitions	select **Reset Defaults.**
enter the type of pack	select a type in **Pack Type.**

7. Select **Save.**

Modifying Reference Ranges

NOTE: Some tests have parameters that you cannot edit.

1. At the workspace, select **Setup**.
2. Select **Test Summary.**
3. Select a test.
4. Select **Ranges.**
5. Select **Edit.**
6. Complete the appropriate tasks.

If you want to enter or edit . . .	*Then . . .*
name of the range	enter the name in **Range.**
low limit or high limit for a reference range, check range, or linearity	a. Enter the low limit in **Low Limit.** b. Enter the high limit in **High Limit.**
gender	select either **M** for male or **F** for female.
age	enter the youngest age on the left and the oldest age on the right.
automatically scheduled tests or profiles for low or high results	select **Reflex Tests.**
more restrictive values for Check Range or Linearity	enter more restrictive values in **Check Range** or **Linearity.**
whether to repeat tests with results outside the Check Range or the Linearity range limits	select **Repeat if** < or **Repeat if** >.

195

223

If you want to enter or edit . . .	*Then . . .*
low limit, below which the system reschedules the test	a. Select **Repeat if** < (less than) **Conc Range**. b. Enter a value in **Dilution Point**. c. Select a factor in **Dilution**.
high limit, above which the system dilutes and reschedules the test	a. Select **Repeat if** > (greater than) **Conc Range**. b. Enter a value in **Overdilution Point**.

7. You can reset the parameters to the default values:
   a. Select **Reset Defaults**.
   b. Select an option:
      - **All** to reset all ranges and parameters to the default values
      - **Ranges** to reset the ranges to the default values
8. You can display or edit the limits of the ranges for reflex tests:
   a. Select **Reflex Tests**.
   b. Select an option for a range:
      - **Schedule if** < to schedule the selected test if the result is less than the low limit of the range
      - **Schedule if** > to schedule the selected test if the result is greater than the high limit of the range
   c. Select **Continue**.
9. Select **Save**.

Defining Test Profiles

1. At the workspace, select **Setup**.
2. Select **Profile Summary**.
3. Select **Profile Definition**.
4. Select **Add Test Profile**.
5. Enter the name of the test profile in **Profile**.
6. You can enter the LIS Code in **LIS Code**.
7. Select the tests that you want the profile to include.
8. Select **Save**.

2241

146

Defining Ratio Tests for Calculated Parameters

You can define the ratio tests for calculated parameters such as Free Thyroxine Index (FTI) and Red Blood Cell Folate (RBC Folate). The ACS:Centaur system calculates the FTI index and RBC folate values using direct measurement, equations, and off-system tests.

1. At the workspace, select **Setup**.
2. Select **Test Summary.**
3. Select **Add Ratio.**
4. Select **Edit.**
5. Complete the appropriate tasks.

If you want to . . .	*Then . . .*
enter the name	enter the name in **Test**.
enter the LIS code for the test	enter the LIS code in **LIS Code.**
review the result before the system reports the result	select **Hold**.
enter the units	select or enter a unit of measure in **Units.**
enter the number of decimal places	select a number of decimal places from 0 to 3 in **Decimal**.
enter a reference range	a. Enter the low limit in **Low Limit.** b. Enter the high limit in **High Limit.** A flag appears with results beyond the reference range.
enter a ratio definition or calculation formula	select or enter the formula (without spaces) in **Formula**: + to add – to subtract * to multiply / to divide (and) to specify order of calculations, using up to 4 sets
enter a variable for each letter in the formula	select a variable in **Variable**.

228

121

6. Select **Save**.

Defining Off-System Tests

An off-system test is a test that the ACS:Centaur system does not perform, but can report. You can define the tests that are required for ratio test definitions but are not performed by the ACS:Centaur system. Off-system test results can also appear on collated reports.

1. At the workspace, select **Setup**.
2. Select **Test Summary**.
3. Select **Add Off-System**.
4. Select **Edit**.
5. Complete the appropriate tasks.

If you want to . . .	*Then . . .*
enter the name	enter the name in **Test**.
enter the LIS code for the test	enter the LIS code in **LIS Code**.
review the result before the system reports the result	select **Hold**.
enter the units	select or enter a unit of measure in **Units**.
enter the number of decimal places	select a number of decimal places from 0 to 3 in **Decimal**.
enter a reference range	a. Enter the low limit in **Low Limit**. b. Enter the high limit in **High Limit**. A flag appears with results beyond the reference range.

6. Select **Save**.

226

Selecting Sample Handling Options

You can select several sample handling options:

- sample identification
- optimization of sample aspiration
- sample tube types
- repeats

Selecting Sample Identification

1. At the workspace, select **Setup**.
2. Select **Summary**.
3. Select **Barcode & Tube Type**.
4. Select **SID & Rack ID** or **Rack ID Only**.
5. Select **Save**.

Selecting Sample Aspirations

You can optimize the sample aspiration:

- to optimize throughput or to run tests in the order of detection
- to maximize the number of completed tests or to maximize the usable volume in the sample cup

1. At the workspace, select **Setup**.
2. Select **Summary**.
3. Select **Sample Handling**.
4. Select **In Random Access with Optimized Throughput** or **In the Order the System Detects Samples** in Run Tests.
5. Select **To Maximize the Number of Tests Completed** or **To Maximize the Usable Volume** in Run Samples.
6. Select **Save**.

Selecting Sample Tube Types

You can select four types of sample tubes to use on the system. Each rack holds five sample tubes of the same type.

1. At the workspace, select **Setup**.

227

144

2. Select **Summary.**
3. Select **Barcode & Tube Type.**
4. Select up to four types of sample tubes.
5. Select **Save.**

Defining Repeats

You can set up the system to hold samples and perform repeats, or to remove samples and reload repeats. You can also set up the system to repeat a test if the system detects a short sample or a clot.

1. At the workspace, select **Setup.**
2. Select **Summary.**
3. Select **Sample Handling.**
4. Complete the appropriate task.

If you want to . . .	*Then select . . .*
repeat the test for an insufficient sample	**Repeat if Insufficient Sample is Detected.**
repeat the test when the system detects clots	**Repeat if Clot is Detected.**
hold samples and perform repeats	**Hold All Samples for Repeat & Reflex Tests.**
remove samples and reload repeats	**Operator Loads Samples for Repeat & Reflex Tests.**

5. Select **Save.**

Adjusting the Time

Use this procedure to adjust the time. The calendar and clock are powered by a long-life battery in order to maintain the correct date and time even if the power is turned off.

1. At the workspace, select **Setup**.
2. Select **Summary**.
3. Select **Additional Options**.
4. Enter the number of minutes to adjust the time in **Time Correction**.
5. Select **Save**.

Defining Printing Options

You can select among several types of printers and two standard paper sizes. You can also add a header that prints on the reports.

Selecting a Printer

1. At the workspace, select **Setup**.
2. Select **Summary**.
3. Select **Print Options**.
4. Select a printer in **Printer**.
5. Select **Save**.

Selecting Paper Size

1. At the workspace, select **Setup**.
2. Select **Summary**.
3. Select **Print Options**.
4. Select a paper size:
   - US letter (21.6 x 27.9 cm, or 8.5 x 11 in)
   - A4 letter (21.1 x 29.2 cm, or 8.313 x 11.5 in)
5. Select **Save**.

Entering a Report Header

1. At the workspace, select **Setup**.
2. Select **Summary**.
3. Select **Print Options**.
4. Enter the header you want to appear on reports in **Report Header**.
   You can enter up to 80 characters and you can have up to six lines of text.
5. Select **Save**.

Defining System Passwords

You can assign operator passwords and functions for two levels of security. Operators in the general class have no passwords.

1. At the workspace, select **Setup**.
2. Select **Summary.**
3. Select **Security.**
4. Enter a password for User 1 or User 2.
5. Select a function and a class.
6. Select **Save.**

232

Defining Sample Barcode Options

You can select up to four barcode symbologies to use in your laboratory with patient sample barcodes. For most symbologies, you can select the following:

- the format
- whether to use check digits at the end of the barcode
- whether to use the SID mapping option

NOTE: Code 128 is always active.

Selecting the Barcode Symbology and Format

1. At the workspace, select **Setup**.
2. Select **Summary**.
3. Select **Barcode & Tube Type**.
4. Select a barcode symbology.
5. Select **Fixed** or **Variable** in Type.
6. Enter the number of characters in **Length** for a barcode of fixed length.
   Enter **0** (zero) for a barcode of variable length.
7. Select **Check Digit** if the barcode uses a check digit.
8. Select **Save**.

Defining Custom Barcode Labels

If your laboratory creates its own barcode labels, use this procedure to specify the characters in the patient sample barcode that you want the ACS:Centaur system to read as the SID code. The ACS:Centaur system accepts SID codes up to 13 characters long. If the SID code is embedded in a longer barcode, use the SID mapping option to specify the characters of the SID code.

The SID mapping option affects patient sample barcode labels. This option does not affect the barcode labels for ACS controls, ACS calibrators, or ACS ancillary reagents.

NOTE: If you are using Code 128, you must exclude the ASCII characters ESC, Bell, and CR (Return) from your SID codes because they are reserved for use in the ACS calibrator and control barcode labels.

1. At the workspace, select **Setup**.
2. Select **Summary**.

233

V V75

3. Select **Barcode & Tube Type.**
4. Select a barcode symbology.
5. Select **Fixed** or **Variable** in Type.
6. Enter the number of characters in Length for a barcode of fixed length.
   Enter **0** (zero) for a barcode of variable length.
7. Select **Check Digit** if the barcode uses a check digit.
8. Define the SID code by selecting 13 characters to appear as an SID in the worklist.
9. Select **Save.**

234

Defining LIS Communication Options

You can configure the communication options for the ACS:Centaur system and your LIS to automatically transfer worklist requests and results to and from an LIS.

To automatically transfer worklist requests and results, your laboratory can use barcoded samples or transfer the information using the rack ID. Your LIS must support the options that you select on the ACS:Centaur system.

1. At the workspace, select **Setup**.
2. Select **Summary**.
3. Select **LIS Communication**.
4. Select the options for your LIS:
   - Select **ASTM** in Protocol.
   - Select the baud rate.
   - Select the data bits.
   - Select the stop bits.
   - Select the parity.
   - Enter the system ID.
   - Enter the LIS ID.
   - Enter the timeout in seconds for no response, interframe, query, and connection delay.
5. Select the options that you want the ACS:Centaur system to perform:
   - System automatically queries the LIS for requests
   - System automatically sends all results to the LIS except results on hold
   - Collate patient results before sending to the LIS
   - Send and receive Rack IDs
   - Remove leading spaces from SIDs
   - Error detection
6. Select **Save**.

Appendixes

Page

Appendix A: Protecting Yourself from Biohazards **A-1**

Appendix B: Services and Supplies **B-1**

Addresses and Communication Numbers B-1

Standard Instrument Warranty and Service Delivery Policy B-3

- Warranty Period B-3
- Warranty Service During Normal Hours B-3
- Extent of a Warranty Service Call B-3
- Warranty Service Outside Normal Hours B-4
- Replacement of Parts B-4
- Design Changes and Retrofitting of Instruments B-4
- Key Operator Designation B-4
- OSHA Requirements (US only) B-4
- Warranty Exclusions B-5
- Limitations of Chiron Diagnostics's Original Warranty B-6

Supplies and Accessories B-6

Appendix C: Preinstallation Site Requirements **C-1**

Instrument C-1

Water Supply C-1

Drainage System C-2

Delivery C-2

Communications C-2

Environment C-2

Appendix D: Installing and Relocating **D-1**

Appendix E: Reagents and Water Quality **E-1**

System Reagents E-1

Reagent Water Quality E-1

- Introduction E-1
- What is Reagent Water? E-2
- Purifying Water E-3

236

205

Maintaining Water Quality E-3
Problems Caused by Water E-5

Appendix F: Specifications **F-1**
Dimensions F-1
Microprocessor (CPU) Specifications F-1
Printer Specifications F-2
Environmental Specifications F-2
Outputs F-2
Luminometer Specifications F-2
Electrical Ratings and Power Requirements F-3
Primary Sample Tube Specifications F-3
Sample Transfer Cups and Tubes Specifications F-4
Microsample Containers Specifications F-4

Appendix G: System Symbols **G-1**

Appendix H: References **H-1**

237

Appendix A: Protecting Yourself from Biohazards

This appendix summarizes the established guidelines for handling laboratory biohazards. This summary is based on the guidelines developed by the National Institutes of Health (NIH), the Centers for Disease Control (CDC), and the NCCLS Document M29, Protection of Laboratory Workers from Infectious Disease Transmitted by Blood and Tissue.[7]

Use this summary for general information only. It is not intended to replace or supplement your laboratory or hospital biohazard control procedures.

By definition, a biohazardous condition is a situation involving infectious agents biological in nature, such as the hepatitis B virus, the human immunodeficiency virus (HIV), or the tuberculosis bacterium. These infectious agents may be present in human blood and blood products and in other body fluids.

The major sources of contamination when handling potentially infectious agents are:

- hand-to-mouth contact
- hand-to-eye contact
- direct contact with superficial cuts, open wounds, and other skin conditions that may permit absorption into subcutaneous skin layers
- splashes or aerosol contact with skin and eyes

To prevent accidental contamination in a clinical laboratory, strictly adhere to the following procedures:

- Wear gloves while servicing parts of the instrument that have contact with body fluids such as serum, plasma, urine, or whole blood.
- Wash your hands before going from a contaminated area to a noncontaminated area, or when gloves are removed or changed.
- Perform procedures carefully to minimize aerosol formation.
- Wear facial protection when splatter or aerosol formation are possible.
- Wear protective clothing such as lab coats or aprons when working with possible biohazard contaminants.
- Keep your hands away from your face.
- Cover all superficial cuts and wounds before starting any work.
- Dispose of contaminated materials according to your laboratory's biohazard control procedures.
- Keep your work area disinfected.
- Disinfect tools and other items that have been near any part of the instrument sample path or waste area with 15% v/v bleach.

238

✓10

- Do not eat, drink, smoke, or apply cosmetics while in the laboratory.
- Do not mouth pipet any liquid, including water.
- Do not place tools or any other items in your mouth.
- Do not use the biohazard sink for personal cleaning such as rinsing coffee cups or washing hands.

To prevent needlestick injuries, needles should not be recapped, purposely bent, cut, broken, removed from disposable syringes, or otherwise manipulated by hand.

Appendix B: Services and Supplies

This section provides information for contacting Chiron Diagnostics and for ordering supplies.

Addresses and Communication Numbers

For ordering accessories and supplies within the United States, call toll free, 1-800-255-3232.

For technical information, and service and repair information within the United States, call toll free, 1-800-255-2121.

Australia:
Australian Diagnostics Corporation Pty. Ltd.
2 Keith Campbell Court
Scoresby, Victoria 3179
Tel: 61-3-9212-8444
Fax: 61-3-9212-8445

Austria:
Ciba Corning Diagnostics GmbH
Traunstr. 46
5026 Salzburg
Tel: 43-662-288110
Fax: 43-662-288119

Belgium:
Ciba Corning Diagnostics s.a./n.v.
Excelsiorlaan 49
B-1930 Zaventem
Tel: 32-2-7207120
Fax: 32-2-7211212

Canada:
Ciba Corning Canada Inc.
90 Gough Road, Unit #1
Markham, Ontario, L3R 5V5
Tel: 905-475-2220
Fax: 905-475-2145

France:
Ciba Corning Diagnostics S.A.
B.P. 109, Parc des Bellevues, Eragny
95613 Cergy Pontoise Cedex
Tel: 1-34-40-40-00
Fax: 1-34-40-40-91

Germany:
Ciba Corning Diagnostics GmbH
Siemensstrasse 3
D-35463 Fernwald
Tel: 0641-4003-0
Fax: 0641-4003111

Hong Kong:
Ciba Corning Diagnostics (H.K.) Limited
20/F Gee Chang Hong Centre
65 Wong Chuk Hang Road
Tel: 852-2814-7337
Fax: 852-2873-4245
Telex: 74673 CCD HX

Italy:
Ciba Corning Diagnostics S.p.A.
Via Roma, 108-Palazzo E
20060 Cassina de' Pecchi (MI)
Tel: 02-95455.1
Fax: 02-95300419

240

Japan:
Ciba Corning Diagnostics KK
Unosawa Tokyu Building 3F
1-19-15, Ebisu
Shibuya-Ku,
Tokyo 150
Tel: 03-3440-2411
Fax: 03-3440-6999

Korea:
Ciba Corning Korea Ltd.
Kye Myung Building (4F)
Myungil Dong 48-7
Kangdong-Gu
Seoul 134 070
Tel: 82-2-428-5980/8
Fax: 82-2-428-5989

Mexico:
Ciba Corning Diagnostics de Mexico SA de CV
Av. Periferico Sur No. 6677
Col. Ejidos de Tepepan
Xochimilco, Mexico D.F., C.P. 16018
Tel: 525-641-3815
Fax: 525-641-3440

Netherlands:
Ciba Corning Diagnostics N.V.
Peppelkade 64 D/E
Postbus 111
3990 DC Houten
Tel: 31-3403-50750
Fax: 31-3403-51041

*Use for U.S. produced and distributed products only.

Spain:
Ciba Corning Diagnostics S.A.
Edificio Dublin
Parque Empresarial San Fernando
28831 Madrid
Tel: 341-677-5545
Fax: 341-677-6871

Switzerland:
Ciba Corning Diagnostics AG
Neue Winterthurerstrasse 15
CH-8305 Dietlikon
Tel: 01-833-27-27
Fax: 01-833-62-31

United Kingdom:
Ciba Corning Diagnostics Limited
Colchester Road
Halstead, Essex, CO9 2DX
Tel: 01787-472461
Fax: 01787-475088

United States:
Worldwide Corporate Headquarters
Ciba Corning Diagnostics Corp.
63 North Street
Medfield, MA 02052
Tel: 508-359-7711
800-255-3232
Fax: 508-359-3599

*United States:
U.S. Group Headquarters
Ciba Corning Diagnostics Corp.
115 Norwood Park South
Norwood, MA 0206
Tel: 800-255-3232 (ordering)
800-255-2121 (24-hour technical assistance)
Fax: 617-551-7779

244

2/13

Standard Instrument Warranty and Service Delivery Policy

Chiron Diagnostics and its authorized distributors provide customers who acquire new Chiron Diagnostics instruments with a one-year comprehensive, but limited, warranty. This limited warranty is designed to protect customers from the cost associated with repairing instruments that exhibit malfunctions due to defects in materials and/or workmanship during the warranty period.

Warranty Period

The warranty period commences upon installation at the customer's location and extends for a period of one year thereafter. The customer, with some exceptions, may purchase additional service coverage beyond the one year warranty period as part of the original instrument acquisition for second or subsequent years beyond the original installation date. The customer's original Purchase Invoice or appropriate Agreement Addendum must indicate the term in months for additional service coverage.

Warranty Service During Normal Hours

The customer may obtain warranty service for instruments during normal business hours by contacting the Chiron Diagnostics location or authorized distributor. Refer to the list of Chiron Diagnostics locations in this section.

Extent of a Warranty Service Call

During the warranty period, Chiron Diagnostics or an authorized distributor will repair the system during normal business hours, at their expense, subject to the exclusions listed below. Chiron Diagnostics or an authorized distributor will initiate a warranty field service call when notified. The call will be considered complete when the instrument is repaired and the customer, or the customer's representative, agrees the system is operating to specifications by signing the appropriate Field Service Report. When service is complete, the customer will receive a copy of the Field Service Report detailing all work performed by the Chiron Diagnostics representative.

Warranty Service Outside Normal Hours

Customers, with some exceptions, may also request warranty service to be delivered outside of normal business hours, including evenings, weekend days, or nationally observed holidays by contacting the Chiron Diagnostics location or authorized distributor. Warranty service performed at these times is subject to a surcharge unless the customer has purchased a service product option that provides warranty service outside normal hours.

Replacement of Parts

In performing warranty service under this agreement, Chiron Diagnostics or its authorized distributors will provide appropriate parts to repair the instrument at no charge with the exception of certain parts or subassemblies that are considered customer maintenance items. Customer maintenance items include, but are not limited to, the following items: lamps, electrodes or sensors (which are covered by a separate warranty), reagents, calibrators, controls, paper, and pens. Consult the appropriate operator's manual for a complete list of maintenance items for any specific model of instrument.

Design Changes and Retrofitting of Instruments

During the warranty period, Chiron Diagnostics reserves the right to change the design or construction of specific models of instruments without incurring any obligation to make such changes available to an individual instrument. If Chiron Diagnostics notifies customers of a change that improves the performance or reliability of their instrument, and requests to retrofit that instrument, customers must agree to allow Chiron Diagnostics or an authorized distributor, at Chiron Diagnostics's expense, to retrofit components or make design changes, which will not adversely affect the instrument's performance characteristics.

Key Operator Designation

Customers will designate a key operator who will be available to Chiron Diagnostics representatives to describe instrument malfunctions by telephone and/or to perform simple adjustments and corrections as requested. If a key operator is not designated or is unavailable when the customer requests service, the delivery of warranty service may be delayed.

OSHA Requirements (US only)

When service is required at a customer location, the customer must provide the Chiron Diagnostics representative with adequate facilities that comply with the regulations of the Secretary of Labor under the Occupational Safety and Health Act (OSHA) of 1970, as amended.

243

Warranty Exclusions

Chiron Diagnostics or its authorized distributors will provide warranty service to customers during the warranty period, which includes appropriate parts, travel to the location of the instrument, and on-site labor during normal business hours. In addition, Chiron Diagnostics or its authorized distributors will provide warranty service during the warranty period only, and instrument repairs, labor, or replacement parts, as provided during the original warranty period, will not extend the original warranty period.

This warranty will not apply if any of the following events occur:

1. Repairs or modifications have been made to the instrument by someone other than an authorized Chiron Diagnostics representative.
2. The instrument has been operated using accessories and supplies other than Chiron Diagnostics brand accessories, or consumable supplies and/or reagents not having the same grade, quality, and composition as defined in the system operator's manuals.
3. The instrument has not been installed within 90 days of shipment to the customer's facility unless otherwise specified.
4. The customer has not performed appropriate customer maintenance procedures, as outlined in the instrument operator's manual.
5. The instrument has been misused or used for a purpose for which it was not intended.
6. The instrument has been damaged in transit to the customer or damaged by the customer while moving or relocating it without supervision by a Chiron Diagnostics representative.
7. Damage was caused by floods, earthquakes, tornados, hurricanes or other natural or man-made disasters.
8. Damage was caused by Acts of War, vandalism, sabotage, arson, or civil commotion.
9. Damage was caused by electrical surges or voltages exceeding the tolerances outlined in the system operator's manuals.
10. Damage was caused by water from any source external to the instrument.
11. The customer has purchased an alternative agreement whose terms of warranty supersede this agreement.

Chiron Diagnostics or its authorized distributors will invoice customers, at current standard labor and parts rates, for instruments repaired to correct damage or malfunctions due to any of the reasons listed above.

244

Limitations of Chiron Diagnostics's Original Warranty

Chiron Diagnostics warrants to all customers that service will be performed in a professional manner consistent with the industry. If the instrument is not performing according to its specifications, Chiron Diagnostics will, at its option, repair or replace the instrument. This is the customer's sole and exclusive remedy for breach of warranty.

Other than as stated above, there are no other warranties, express or implied, accompanying either the leasing of the equipment or its sale to the customer at the expiration or termination of this agreement. In addition, the warranties of merchantability and fitness for a particular purpose are disclaimed. In addition, Chiron Diagnostics shall not be liable for any damages caused by delay in providing repair service from any cause. Chiron Diagnostics's liability for breach of this warranty shall be limited to the repair or replacement of defective equipment and shall not include any incidental, contingent, or consequential damages.

Supplies and Accessories

A list of supplies and accessories will be provided to the customer with catalog numbers to assist in the ordering process.

Appendix C: Preinstallation Site Requirements

A Field Service Engineer (FSE) will conduct a site inspection at your site prior to installing an ACS:Centaur system. During the inspection the FSE ensures requirements are met. Areas that are addressed during the site inspection are listed below.

Instrument

- Power Source
- Grounding
- Ambient Temperature
- Relative Humidity
- Work Area
- Flooring
- Special Ventilation
- Service Area
- Power Consumption
- Cycle per Second
- Minimum Amp Protection
- Socket Type

Water Supply

- Reagent Water Type
- Outlet Location
- Outlet Connection
- Temperature
- Pressure/Flow
- Degassing

246

Drainage System

- Drain Port Inlet
- Drain Port Opening
- Drain Port Height

Delivery

- Access Ways and Openings
- Turning Radius
- Special Equipment
- Elevator Capability
- Facility Modification

Communications

- Telephone Line
- LIS Connection and Cables
- Modem

Environment

The environment must be free of the following elements:

- Electrical Fields
- High Frequency Emissions
- Intense Magnetic Fields
- Drafts
- Direct Sunlight
- Dust
- Corrosive Gasses
- Flammable Gasses
- Vibration
- Radiation Sources
- Radio Fields

Appendix D: Installing and Relocating

CAUTION: An authorized Chiron Diagnostics Field Service Representative should install or relocate your systems. Unauthorized installation or movement can damage your systems and void your warranty and/or service contract.

Contact Chiron Diagnostics when you receive your systems or if you need to relocate your systems within your facility. Call toll free, 1-800-255-2121.

248

Appendix E: Reagents and Water Quality

System Reagents

The reagents described in Table E-1 are for In Vitro Diagnostic Use only. Use the reagents until the expiration date stated on the bottle labels. Dispose of Acid and Base reagents using disposal techniques for nonhazardous liquid wastes.

Chiron Diagnostics is not responsible for the performance of the ACS:Centaur system when reagents other than Acid and Base reagents are used.

WARNING Avoid contact of Acid and Base reagents with skin and eyes. Wash hands thoroughly after handling the reagents. If contact with eyes occurs, flush the area with water. If reagent is ingested, call a physician immediately.

Table E-1. System Reagents

Name	Volume	Active Ingredients	Storage
Acid Reagent	1.5L 5000 tests/bottle	5% hydrogen peroxide 0.1N nitric acid	room temperature (18 – 25°C)
Base Reagent	1.5L 5000 tests/bottle	0.25N sodium hydroxide, surfactant	room temperature (18 – 25°C)
Wash 1, Wash 2 Solution	1.5L	phosphate buffered saline, pH 7.2	room temperature (18 – 25°C)
Cleaning Solution	1.5L	0.26% sodium hypochlorite	room temperature (18 – 25°C)

Reagent Water Quality

Introduction

Water quality is an important consideration in the laboratory because it can significantly affect the outcome of laboratory procedures and the measurement of patient samples.[7,8]

This overview discusses reagent water quality guidelines as specified by the National Committee for Clinical Laboratory Standards (NCCLS).[9] Use these guidelines to evaluate the reagent water quality in your laboratory and to determine the best method for obtaining the water quality you need.

249

221 250

Good laboratory practices suggest that you establish a protocol that supports the manufacturer's requirements for the instrument to:

- insure optimum performance of automated laboratory instruments
- eliminate water quality as a source of problems when troubleshooting
- help you to meet requirements for state and federal laboratory certification

What is Reagent Water?

Reagent water is laboratory water that meets specifications for clinical laboratory use.

The NCCLS has defined three grades of reagent water:

- Type I, the highest grade
- Type II, the intermediate grade
- Type III, the lowest grade

Table E-2 lists the NCCLS specifications for the three types of reagent water. Use this information to determine the water quality in your laboratory. Refer to the NCCLS guidelines for common laboratory uses of Type I, Type II, and Type III reagent water.

Table E-2. Reagent Water Specifications

Specification	Type I	Type II	Type III
Maximum bacterial content colony forming units per mL (CFU/mL)*	10 (preferably bacteria free)	1000	not applicable
pH	not applicable	not applicable	5.0–8.0
Minimum resistivity (megohm/cm at 25°C)†	10 (inline measurement by sensor or resistor)	1.0	0/1
Maximum silicate (mg/L)‡	0.05	0.1	1.0
Particulate matter (µm)§	smaller than 0.22 µm	not applicable	not applicable
Organic compounds**	pretreat with activated carbon	not applicable	not applicable

* Bacterial content: The number of colony forming units in water. Bacterial content is a water contaminant you measure to determine water quality.

† Resistivity: The ability of water to resist electrical conduction due to the ion content. Resistivity is the standard test measurement for determining water quality. The higher the resistivity, the lower the ion content and the better the water quality.

250

‡ Silicates: Compounds you remove to produce Type I reagent water.

§ Particulate matter: Water is passed through a 0.22 µm filter, and undissolved (insoluble) substances larger than 0.22 µm are removed by the filter.

‖ Organic compounds: Compounds you remove to produce Type I reagent water.

Purifying Water

As with all diagnostic testing procedures, good laboratory practices suggest that you establish a protocol that supports the manufacturer's requirements for selecting the appropriate type of reagent water. You can then produce reagent water in your laboratory by setting up and maintaining a water purification system that uses one or more of the typical laboratory water purification methods described in Table E-3.

Table E-3. Water Purification Methods

Method	Description
Distillation	Changes water from liquid to vapor and leaves behind impurities such as particulates and bacteria
Deionization	Uses synthetic resins to remove ionized impurities by ion exchange
Reverse Osmosis	Forces water under pressure through a semipermeable membrane to remove dissolved solids and organic impurities
Adsorption	Uses activated carbon, clays, silicates, or metal oxides to remove organic impurities
Filtration	Forces water through a semipermeable membrane to remove insoluble matter, emulsified solids, pyrogens, and microorganisms

The quality of the reagent water you produce depends on the quality of the water you start with (source water) and the performance of your water purification system.

To produce the type of water you require, you may need a purification system that uses a combination of methods. For example, if you want to produce Type I water, you need a system that uses adsorption to remove organic impurities, ionization to remove ionized impurities, and filtration to remove particulates. NO TAG illustrates a water purification system that combines adsorption, deionization, and filtration to product Type I water.

Maintaining Water Quality

You can ensure that the reagent water supply in your laboratory consistently meets NCCLS guidelines by:

- storing reagent water properly

251

2-5 254

- testing for resistivity and contamination
- maintaining your water purification system

Establishing procedures for maintaining reagent water quality is also required for laboratory inspection and accreditation by the College of American Pathologists (CAP).[10]

Storing Reagent Water

Type I reagent water cannot be stored. Use it immediately after you produce it because it degrades quickly and no longer meets Type I reagent water specifications. Additionally, you cannot purchase Type I reagent water because its purity is not reliable.

Store Type II and Type III reagent water in glass or polyethylene bottles. Use it as soon as possible after preparation to reduce the risk of contamination by microorganisms.

Testing Reagent Water

To monitor water quality and detect problems with your water purification system, test reagent water regularly for resistivity and bacterial contamination. You may also want to send reagent water out of the laboratory periodically for independent evaluation. Record your test results and any corrective action.

Refer to the NCCLS specifications for information about recommended water testing methods.[7]

Maintaining your Purification System

Efficient operation and regularly scheduled maintenance of your water purification system is the key to optimizing the performance of the system and consistently obtaining reagent quality water. Preventative maintenance reduces the chance of the purification system introducing additional contaminants into source water and ensures that reagent water retains its purity when it is introduced into the laboratory instrument.

The following are suggested guidelines for maintaining water purification systems to ensure smooth operation and prevent system problems.

For customized water systems:

- Change filters on carbon or membrane filter systems as required
- Use a recirculating pump to optimize performance and reduce contamination
- Filter the source water before treatment in reverse osmosis systems, and recirculate deionizers in closed loops to extend resin life

For distillation systems:

- Check the water vessels regularly for the presence of slippery film
- Clean and disinfect the vessels as required with an agent that rinses well, such as hydrogen peroxide
- Clean the boiler regularly to remove deposits
- Test routinely for contamination

For complete information about operation and maintenance requirements for your water purification system, refer to the manufacturer's specifications.

Problems Caused by Water

Using water that does not meet NCCLS guidelines can cause problems with clinical laboratory systems. Some common problems include:

- contamination of system components
- inaccurate patient and calibration results
- out–of–range quality control results
- deterioration of lyophilized quality control material
- color changes and poor stability and performance of reagents

These problems can be caused by failure to use the appropriate type of reagent water, bacterial contamination, and inadequate maintenance of the water purification system,

Refer to Section 8, *Troubleshooting*, for more detailed information about problems caused by water that does not meet reagent water specifications.

Appendix F: Specifications

This section summarizes the ACS:Centaur system specifications. The design of the ACS:Centaur system meets the requirements of the following agencies:

- UL
- CSA
- IEC
- JIS and MHW
- TUV
- FCC Class A
- VDE Class A
- CE

Dimensions

Depth	1.05 m (41.2 in)
Height	1.27 m (50 in)
Width	1.83 m (72 in)
Total Envelope	178 x 127 cm (70 x 50 in)
Weight	545 kg (1200 lbs)

The system is equipped with casters to enable it to be moved.

Microprocessor (CPU) Specifications

Main CPU	two Sparc® 2 CPU boards, 32-bit microprocessors with integrated numeric coprocessor
Mass Storage	4 gigabyte hard disk drive and 3.5-inch, double-sided, high-density, 1.44 MB, diskette drive
CD-ROM	650 MB storage capacity; Quad speed
Memory	for the User Interface CPU, 32 MB of dynamic, random access memory (RAM); 256 KB of static RAM; 32 KB of read-only memory (ROM)
Monitor	Resolution Size Color

254

Printer Specifications

The Okidata® OL410e/PS printer is accepted for use with the ACS:Centaur system.

Environmental Specifications

Ambient Operating Temperature	18.0 to 30.0°C
Relative Humidity	24% to 80%, non-condensing
Storage Temperature	0.0 to 50.0°C

Indoor Use Only

Altitude up to 2000 meters

IEC 1010-1 Installation Category I

IEC 1010-1 Equipment Classification Class II

IEC 1010-1 Pollution Degree 1[11]

Outputs

Parallel	one parallel port for the external printer
RS-232C	four serial ports for bidirectional communication: modem, LIS, barcode, and (Uninterruptable Power Supply) UPS
Printer	600 dpi; postscript compatible

Luminometer Specifications

Dark Count Rate	less than 300 counts per second (cps), (25.0°C, gain = 2×10^6)
Mode of Operation	photon counting
Peak Response	420 nm
Spectral Response	300 to 650 nm

255

Electrical Ratings and Power Requirements

Power Consumption	2000W maximum
Electrical Requirements	dedicated line required 208–240V ~ 12A, 50/60Hz

Primary Sample Tube Specifications

Tube Size (mm)	Fill Volume (mL)	Acceptable Manufacturer	Brand
10.25 x 50	2.0	Sherwood Medical	Monoject®
10.25 x 64	3.0	Sherwood Medical	Monoject
10.25 x 82	4.0	Sherwood Medical	Monoject
10.25 x 75		Becton Dickinson	Vacutainer®
10.25 x 100		Becton Dickinson	Vacutainer
11.5 x 66	2.7	Sarstedt	Safety Monovette®
11.5 x 75	4.0	Sarstedt	Safety Monovette
11.5 x 92	4.5	Sarstedt	Safety Monovette Luer Monovette
12.4 x 75		Terumo	
13 x 75	2.5	Becton Dickinson	Vacutainer Plus
13 x 75	4.0	Greiner	
13 x 75	5.0	Sherwood Medical	Monoject Corvac®
13 x 75	7.0	Sherwood Medical	Monoject
13 x 100	6.0	Becton Dickinson	Vacutainer Plus
13 x 100	7.0	Sherwood Medical	Monoject Corvac
13.5 x 75		Terumo	
14.5 x 84		Terumo	
15 x 100		Terumo	
15.3 x 57	4.0	Sarstedt	Safety Monovette Luer Monovette
15.3 x 75	6.0	Sarstedt	Safety Monovette
15.3 x 100	8.5	Sarstedt	Safety Monovette
16 x 75		Becton Dickinson	Vacutainer
16 x 75	7.0	Sherwood Medical	Monoject

256

Tube Size (mm)	Fill Volume (mL)	Acceptable Manufacturer	Brand
16 x 100		Becton Dickinson	Vacutainer
16 x 100	10.0	Sherwood Medical	Corvac
16 x 100	10.0	Sherwood Medical Greiner	Monoject
16.5 x 92	9.0	Sarstedt	Luer Monovette

Sample Transfer Cups and Tubes Specifications

Tube Size (mm)	Bottom Type	Acceptable Manufacturer
12 x 75	round	Various
13 x 75	round	Becton Dickinson
13 x 100	conical	Chiron Diagnostics Olympus
13 x 100	round	Various
13 x 102	round	Becton Dickinson
16 x 38	conical	Hitachi
16 x 75	round	Becton Dickinson
16 x 80	conical	Smith Kline
16 x 100	round	Various
16 x 102	round	Becton Dickinson

Microsample Containers Specifications

Container Size (mL)	Acceptable Manufacturer	Product
0.5	Kodak	Microsample Cup
1.0	Gilford	Sample Cup
1.3	Sarstedt	Microsample Tube
1.5	Becton Dickinson Terumo	Microtainer Capiject
2.0	Kodak	Microsample Cup

257

Appendix G: System Symbols

This section describes the symbols that appear on the exterior of the ACS:Centaur system. The symbols provide you with the location of certain components and with warnings for proper operation.

Symbol	Description
⚠	This symbol appears on the system and in the manual. On the system, this symbol indicates that you should consult the manuals provided with the ACS:Centaur system.
~	This symbol indicates that the input electricity is alternating current.
	This symbol alerts you to important information about the fuses.
	This symbol identifies the location of a protective earth (GND) conductor terminal.
	This symbol cautions you against the risk of exposure to biohazards.
|	This symbol indicates the main power supply is on.
○	This symbol indicates the main power supply is off.
	This symbol indicates the location of the parallel port for the printer.
1, 2, 3	These numbers indicate the locations of the RS-232 serial ports.
	This symbol indicates the location of the barcode scanner connector.
	This symbol indicates the location of the keyboard connector.
	This symbol indicates the location of the diskette drive.
	This symbol indicates the location of the compact disc drive.

258

Symbol	Description
	This symbol indicates the location of the primary reagent compartment.
	This symbol indicates where ancillary reagent packs are loaded onto the system.
	This symbol indicates where ancillary reagent packs are removed from the system.
	This symbol indicates where Stat samples are loaded onto the system.
UUU	This symbol indicates where cuvettes are loaded onto the system.
	This symbol indicates where sample tips are loaded onto the system.
1	This symbol indicates where waste cuvettes and tips trays are collected.
2	This symbol indicates where waste sample tips are collected.
+	This symbol identifies the system fluid bottle for acid reagent.
−	This symbol identifies the system fluid bottle for base reagent.
1	This symbol identifies the system fluid bottle for wash 1 solution.
2	This symbol identifies the system fluid bottle for wash 2 solution.
Cl	This symbol identifies the system fluid bottle for cleaning solution.

289

Symbol	Description
	This symbol identifies the water bottle.
	This symbol identifies the waste bottle.

260

Appendix H: References

1. Whitehead TP, Kricka J, Carter JN, Thorpe G. Analytical luminescence: its potential in the clinical laboratory. Clin Chem 1979; 25/9:1531–1546.
2. Woodhead JS, Campbell AK, McCapra F, Beheshti I, Weeks I. Acridinium esters as high specific-activity labels in immunoassays. Clin Chem 1983; 29/8: 1474–79.
3. Weeks I, Woodhead JS. Chemiluminescence immunoassays. J. Clin Immunoassay 1984; 7/1:82–89.
4. Patel A, Morton MS, Woodhead JS, Ryall MET, McCapra F, Campbell AK. A new chemiluminescent label for use in immunoassay. Biochem Soc Trans 1982; 10: 224–5.
5. Tietz NW. Fundamentals of clinical chemistry, 3rd ed. Philadelphia: W.B. Saunders Company; 1987. 1010 p. [now updated]
6. Kricka LJ. Chemiluminescence immunoassay. In The Immunoassay Handbook, 1st ed. New York: Stockton Press; 1994. pp. 341–343.
7. Dudley chap 10 in The Immunoassay Handbook. 1994. pp. 161–164.
8. Dudley R. Chemiluminescence Immunoassay: An Alternative to RIA. Lab Med 1990; 21/4; 216–221.
9. Chiron Diagnostics 1997. The ACS:180 System.
10. Kaplan LA, Pesce AJ. Clinical Chemistry: theory, analysis, and correlation, 2nd ed. St. Louis: CV Mosby Company; 1989. 1212 p.
11. National Committee for Clinical Laboratory Standards. Preparation and testing of reagent water in the clinical laboratory. 2nd ed. Villanova (PA): NCCLS; 1991 Aug. 37 p. (NCCLS Document C3–A2).
12. College of American Pathologists, Laboratory General Inspection Checklist, Section 1, Quality of water, p. 8. Northfield, IL. 1989.
13. Safety requirements for electrical equipment for measurement, control, and laboratory use. International Standard (IEC) 1010–1.
14. Smart JB. The Ciba Corning ACS:180—A user's perspective. J Clin Immunoassay 1992:15:246–251.
15. Boland J, Carey G, Krodel E, et al. The Ciba Corning ACS:180 benchtop immunoassay analyzer. Clin Chem 1990; 36:1598–1601.
16. Protection of laboratory workers from infectious disease transmitted by blood and tissue. Villanova, PA: NCCLS Publication M29 1991.

261

~~237~~ 261

Glossary

acceptable CV — Highest acceptable percent coefficient of variation among the replicates of the calibrators, controls, or patient samples. The system flags results higher than this value.

acid probe — Mechanical component that injects acid reagent into a cuvette to resuspend the magnetic particles and prepare the ester for light emission.

acid reagent — Solution of 0.5% hydrogen peroxide and 0.1N nitric acid. Acid reagent is added to the magnetic particles in the cuvette after the wash cycle and reacts with the acridinium ester at a low pH. This prepares the ester for light emission.

acridinium ester (AE) — Chemical tag responsible for the flash when acid reagent is added to the acidified magnetic particle/analyte/AE mixture in the cuvette.

activate — Function used to enable an object for full use on the system.

active — Available for full use on the system. An enabled test or a reagent pack can be active.

ancillary reagent — Additional reagents required for an assay, such as Releasing Agent, DTT, or sample diluent. Ancillary reagents can reside in either the sample or reagent areas of system.

ancillary reagent probe — Component that aspirates ancillary reagents from the sample area and dispenses them into cuvettes.

antibody

- Protein (immunoglobulin molecule) produced by the body in response to the presence of an antigen. Antibodies are used as part of the body's resistance to disease.
- Protein that can combine with a specific antigen.

Also called Ab.

antigen — Substance that combines specifically with a corresponding antibody. *Also called* Ag.

archiving — Process that removes data from system memory and stores it on external media. The types of data that you can archive include QC data, patient results, Master Curve data, and calibration data.

aspirate probes — Mechanical devices that draw fluid from the cuvettes after magnetic separation occurs.

262

background Electronic signal of the photomultiplier tube (PMT) in the absence of light.

barcode Encoded information that is read by an optical scanner.

barcode scanner Optical device that scans and decodes barcoded information from the label on a reagent pack or vial, sample cup, or primary sample tube.

base probe Mechanical component that injects base reagent into a cuvette causing the chemiluminescent reaction.

base reagent Solution of <0.25N sodium hydroxide. Base reagent is added to the cuvette in the luminometer. The pH shift and accompanying electron excitation cause the chemiluminescent reaction.

batch Method of order entry which provides the convenience of specifying one or more tests on multiple samples.

baud rate Speed of data transmission in bit per seconds (bps) between the system and a remote device.

bidirectional interface Interface configuration allowing information to be transferred to and from another device.

calibration interval Number of days or hours that the calibration is valid for an assay.

calibrator Solution that contains a known concentration or a known reactivity of one or more analytes and that provides a reference for converting measured signals into concentrations. Calibrators are analyzed with reagents to obtain calibration data points. *See* calibration data.

calibrator card Card that contains the calibrator information for a specific lot of calibrators. The card contains the lot number, the expiration date, and the high and low calibrator values for each analyte contained in the calibrator. This information appears on the card in text and barcodes for you to enter into the system.

cancel Function used to ignore changes made at a screen or window.

carryover Contamination of a sample or reagent by the residue from the preceding sample or reagent.

263

central processing unit — Main printed circuit board of a computing system that interprets instructions and directs the system operations. *Also called* CPU.

character parity — Transmission setting used to check for transmission errors between the system and a remote device. This setting must be the same at the system and the remote device to maintain compatibility between the systems.

chart — QC statistics report that shows a Levey-Jennings chart of the data points and statistics collected during the most recent 45 days for a selected control and test.

check digit — Character printed at the end of a barcode that allows the barcode reader to verify the accuracy of its scanning and to verify accurate data transmission (Communications).

chemi-luminescence — Oxidation reaction of an organic chemical compound. The chemiluminescent reaction emits light.

competitive assay

- Antibody-antigen reaction in which the antigen of unknown concentration in a sample and a labeled antigen in an assay reagent compete for a limited amount of antibody in an assay reagent. The measurable signal produced by the Ab/labeled-Ag reaction is inversely proportional to the unknown concentration of Ag in the sample.
- Antibody-antigen reaction in which the antibody of unknown concentration in a sample and a labeled antibody in an assay reagent compete for a limited amount of antigen in an assay reagent. The measurable signal produced by the Ag/labeled-Ab reaction is inversely proportional to the unknown concentration of Ab in the sample.

control — *See* QC material.

CPU — *See* central processing unit.

cursor — Indicator that appears on the system screen to show you where to make an entry or a selection.

cutoff point — Medical decision point for a qualitative assay. Results above the cutoff point are reported with a different qualitative interpretation than those below the cutoff point.

2641

cuvette	Plastic, disposable container that holds the reaction mixture on the system. The chemiluminescent reaction occurs inside the cuvette.
CV	Percent coefficient of variation among the replicates for a sample.
cycle count	Each time a cuvette exits the luminometer, the cycle count increments by one.
dark count	Electronic background signal of the photomultiplier tube (PMT) in the absence of light.
data bits	Number of characters transmitted at one time between a system and a remote device.
Data link Protocol	Communication protocol used to transmit data between the system and a remote device.
default value	Value defined and preset by Chiron Diagnostics.
define	Establish a value for a variable or symbol, or to establish what the variable represents.
defined limits	Range of the data points defined by Chiron Diagnostics for a selected control and test.
delete	Function used to remove an object from the database.
demographics	Information about a patient or sample such as name, identification number, date of birth, sex, location, and physician or lot number and expiration date.
diluent	Solution used to dilute a sample.
dilution setpoint	Value that indicates the maximum concentration beyond which the system dilutes the sample and repeats the test.
disable	• Command or condition that does not allow a specific event to proceed. • Function used to remove a test from the menu.
diskette drive	Device that writes information to, and reads information from, a 3.5-inch diskette.
DOB	Patient's date of birth.

enable
- Command or condition that permits a specific event to proceed.
- Function used to add a test to the menu.

equivocal
Interpretation of a qualitative assay for which a definitive result is not possible. Certain qualitative assays have equivocal zones which are established as a range on either side of the cutoff point. *Also called* indeterminate.

event log
List of system occurrences including errors, from the most recent to the oldest. This information includes the date and time of each occurrence.

exclude
Function used to remove a value from inclusion with other values.

flash
Short burst of light produced during the chemiluminescent reaction when acridinium ester is oxidized (when the pH rapidly changes from acidic to basic with the addition of base reagent).

forward sandwich (FS) protocol
Test protocol requiring two incubation cycles and two to four wash/aspiration cycles.

graphical user interface
Tool for communicating information to the user via graphics on the system screen. Graphics can include icons, scroll bars, and other graphical elements. *Also called* GUI.

hard disk drive
Device that stores data and contains all system programming. The system uses an X-megabyte hard disk drive.

histogram
Representation of the frequency distribution of patient results in the form of a bar chart.

ICMA
See immunochemiluminometric assay.

immunoassay
Chemical test that uses an antibody-antigen reaction to determine the presence of a specific analyte or to quantify a specific analyte. The analyte being measured may be an antibody or
an antigen.

immunochemilu-m inometric assay
Type of sandwich assay in which the measurable signal produced by the reagent-labeled Ab/Ag reaction is proportional to the unknown concentration of antigen or antibody in a sample. *Also called* ICMA. *See also* sandwich assay.

266

in process Status of a test when the sample is in the inprocess queue and has been detected by the system or the sample is in progress, but no sample has been dispensed yet.

in progress Status of a test when the sample is dispensed into a cuvette and is in the incubation chamber.

inactivate Function used to limit an object for use on the system.

inactive Not available for full use on the system. Only calibrators and controls can be scheduled for inactive tests and reagent packs.

include Function used to add a value for consideration with other values.

incubation ring Component that contains the ring and heatblocks.

indeterminate Interpretation of a qualitative assay for which a definitive result is not possible. Certain qualitative assays have indeterminate zones which are established as a range on either side of the cutoff point. *Also called* equivocal.

intercept Factor used with slope to correlate the assay results with another method. You obtain the intercept and the slope from a regression equation based on method comparison studies.

keyboard System component you use to type information or to respond to a system prompt.

label Substance coupled to an antigen or antibody, which provides the measurement signal for an immunoassay.

Laboratory Information System Laboratory computer system that can be interfaced to the system. *Also called* LIS.

Levey-Jennings charts Charts used to graphically display QC data points for evaluation against a required mean and standard deviation. *See also* chart.

light count Measured electronic signal of the photomultiplier tube (PMT) in the presence of light.

LIS *See* Laboratory Information System.

LIS Code Alphanumeric code that identifies a test, profile, or calibrator to your hospital or laboratory computer.

267

235

Lite Reagent	Assay reagent containing antibody or antigen labeled with acridinium ester in buffer.
lot-to-date QC data	QC mean, SD, number of points, and CV collected over the time the lot was in use on the system.
luminometer	Component of the system where the chemiluminescent reaction occurs and is measured.
Master Curve	Multiple-point curve that Chiron Diagnostics generates for each lot of Solid Phase and Lite Reagent for a particular test. The Master Curve is the reference curve used to convert a measured signal into sample concentration. Calibration data normalizes the system against stored Master Curve data for the tested analyte.
Master Curve card	Card that contains all the Master Curve information for a specific lot of assay reagents. The card contains the reagent lot numbers and expiration dates, number of curve points, and the RLUs and concentration for each curve point. This information appears on the card in text and barcodes for you to enter into the system.
minimum detectable volume	Smallest reagent or sample volume detectable by the system. *Also called* base volume.
n	Total number of observations. Used in calculating the mean.
nonspecific binding	All acridinium ester present during the measurement phase that does not represent specific antibody binding. A small percentage of acridinium ester attaches indiscriminately to the cuvette wall or to particles and does not wash away. The result is a signal that mimics the antibody-antigen reaction.
normal range	*See* reference range.
numeric keys	Keys found on the right side of the keyboard labeled with numbers and mathematical symbols.
observed limits	Range of the data points collected during the most recent 45 days for the selected control and test.
off-system test	Test that is not run on the system but whose results are entered in the result database and printed on a patient report. Off-system test results can also be used in ratio test definitions.

268

one-step protocol Test protocol that includes a 20 minute incubation and 1, 2, or 3 wash aspirate cycles.

Used to detect antibody.

optimize placement Function that indicates where to place reagent packs so that reagent probes can operate efficiently.

orderable test definition (user) Set of parameters that users define for each test such as test name, reference range, check range, and number of replicates.

pack ID Identification code contained in the barcode on a reagent pack that the system recognizes as unique to that pack.

paramagnetic particles Magnetic particles used in the Solid Phase. *Also called* PMP.

PBS *See* phosphate buffered saline.

pending samples Samples for which tests are scheduled but not yet complete.

pending tests Tests still to be performed by the system.

phosphate buffered saline Saline solution that is pH buffered. Phosphate buffered saline is used for washing and resuspending solid phase particles.

photomultiplier tube Sensitive photodetector that captures individual photons of light. The photodetector consists of a vacuum-filled photo tube with a cathode (usually nine diodes) and an anode that the system uses to generate a signal (pulse) during the measurement phase. The signal is directly proportional to the amount of illumination produced by the reaction and can be converted into sample concentration. *Also called* PMT.

photon Unit of light; quantum of radiant energy.

PID Patient identification code. A unique code that identifies the patient from which the sample was obtained.

PMP *See* paramagnetic particles.

PMT *See* photomultiplier tube.

pointing device Apparatus used to interact with system software through the user interface, such as a mouse or a trackball.

369

power supply Electronic subsystem that converts the AC voltages in the power line to the DC voltages used inside the system.

power-on time Cumulative time the system power has been on since its first use.

predilution Dilution option that allows the operator to load a diluted sample and specify the dilution factor.
The system corrects the assay value for the dilution factor.

primary sample tube Tube used to collect patient blood samples by venipuncture.

profile Group of related tests or a group of the same test with different dilution specifications.

prompt Questions, instructions, or commands that help you complete the current task.

query timeout Maximum number of minutes required for a remote device to respond to a query from the system.

rack Device used to present sample tubes to the system. The rack contains space for up to five sample tubes.

Rack ID Positional identification code. The unique code that identifies each sample rack and the positional location of the sample in the rack. *Called* Rack *on the user interface*

random access Mode of operation in which the system processes samples for multiple assays in the most efficient order.

ratio definition Formula the system uses to calculate the results of a ratio test.

ratio test Test results calculated from the results of other tests. FTI is an example of a ratio test.

raw data Total photon count that the system receives for a flash. The raw data is not corrected.

reagent pack Triple-chamber container for the Solid Phase, Lite Reagent, and if required, ancillary reagent. Reagent packs are loaded onto a rocker in the reagent area of the system so that the solid phase remains in suspension.

270

reagent probe 1, 2, or 3 Three independent components that aspirate assay reagents and ancillary reagents from the reagent area and dispense them into cuvettes.

reference range Range of values for each assay from a defined population. Each laboratory should establish its own reference ranges for the diagnostic evaluation of patient results. The normal range is a reference range for the healthy population and can be defined by sex, age, or other patient attributes. Reference ranges can also exist for various pathological states. For example, there may be reference ranges for hypothyroid, euthyroid, and hyperthyroid states.

Chiron Diagnostics provides expected results in the product insert for each assay.

relative light unit Counts generated when the PMT detects light during the chemiluminescent reaction. A relative light unit is calibrated against a tritium source and is unique to its measurement. *Also called* RLU.

releasing agent Solution that is mixed with a sample to separate the agent analyte from the binding proteins, making the analyte available for the reaction.
Also called REL.

remark Warning or caution message about the status of a result. The remark appears next to the result on the screen and on printed reports.

remote device ID Alphanumeric code that identifies the remote device connected to a system port.

replicate Number of times that a sample is assayed for a particular test. The system calculates the mean value from the results of the replicates of the calibrator, control, or patient sample.

RLU *See* relative light units.

Running System state indicating that there are samples in the inprocess queue, tests in the track, or that the cleaning procedure is in process.

sample cup Disposable container that holds samples, controls, or calibrators.

sample probe Component that aspirates a sample and dispenses it into a cuvette in the track.

sandwich assay

- Antibody-antigen reaction in which the antigen of unknown concentration in a sample is sandwiched between antibody bound to solid phase and antibody labeled with acridinium ester. The measurable signal produced by the reaction is directly proportional to the concentration of Ag in the sample.
- Antibody-antigen reaction in which the antibody of unknown concentration in a sample is sandwiched between antigen bound to solid phase and antigen labeled with acridinium ester. The measurable signal produced by the reaction is directly proportional to the concentration of Ab in the sample.

save

Function used to add an object to the database or to include updates to an object in the database.

SD

Standard deviation. The positive square root of the variance. A measure of scatter used to determine quality control ranges.

search

Function used to locate an item in a list.

SI units

International system for units of measure.

SID

Sample identification code. A unique code that identifies each sample.

sign in

Enter a password or code to access the system or an area of the system.

sign out

Indicate that you are finished working in the system or an area of the system.

slope

Factor used along with intercept to correlate the assay results with results from another method. You obtain the slope and the intercept from a regression equation based on method comparison studies.

solid phase

An assay reagent consisting of paramagnetic particles covalently bound to antigen or antibody suspended in a buffer.

sort

Function used to change the order of items in a list. For example, the worklist can be sorted by patient name or by SID.

spline curve

Method of data reduction that uses third-degree polynomials to connect each two data points in turn. The polynomials are adjusted to give a smooth curve.

272

startup The events that occur when the system uses the software to initialize the hardware.

status Information about the current operating condition of the system.

stop bits Number of data bits that maintain synchronization between the system and a remote device during data transmission.

subsystem failure Message classification category meaning:

a. subsystem broken; may be user recoverable and concurrent with system warning state *a*.

b. subsystem off-line until user interaction and concurrent with system warning state *b*.

Message color: red.

subsystem warning Message classification category meaning: subsystem will go off-line if user does not interact. Migrates to subsystem failure state *b*. Message color: yellow.

system failure Message classification category meaning: broken subsystem; system is not capable of processing anything more; may be user recoverable. Message color: red

system warning Message classification category meaning:

a. broken subsystem; still processing some tests, but migrates to system failure when finished.

b. subsystem off-line; system may or may not be still processing some tests.

Message color: yellow.

system clock Twenty-four-hour clock that the system uses to monitor various system functions, such as calibration intervals, and to track the time of events.

update Function used to overwrite information with new information. For example, when a new master test definition is issued, you update the master test definition for access to the latest version.

view Function used to limit the items that appear in a list. For example, you can view all the samples in the worklist or just samples with requests.

waive Function that allows you to use an expired calibration.

273

waste bottle	Container on the system that is the main receptacle for waste.
water bottle	Container on the system that holds the main supply of reagent water.
Westgard rules	QC evaluation rules used to detect systematic or random errors.
window	Screen display area that you can independently move or manipulate. These areas can overlap each other on the screen.
worklist	Information about requested tests and patient demographics.

ACS Centaur

Summary of Safety and Effectiveness

As required by 21 CFR 807.92, the following 510(k) Summary is provided:

1. **Submitters Information**

Contact person: William J. Pignato
Director of Regulatory Affairs

Address: Chiron Diagnostics Corporation
63 North Street
Medfield, MA 02052

Phone: 508 359-3825

Date Summary Prepared: April 14, 1997

2. **Device Information**

Proprietary Name: ACS:Centaur Analyzer
Common Name: Automated Immunoassay Analyzer
Classification Name: Photometric Analyzer for Clinical Use
Classification Number: 21 CFR 862.2160, Class I

3. **Predicate Device Information**

Name: ACS:180® Analyzer
Manufacturer: Chiron Diagnostics Corporation (formally Ciba Corning Diagnostics Corp.)
510(k) Number: D.C. #K902336.

4. **Device Description**

The ACS:Centaur system is a stand-alone, continuous operation, immunochemistry analyzer. The system performs the following functions.

- aspirates and dispenses samples
- performs dilutions
- adds reagents
- incubates reaction vessels
- separates solid and liquid waste
- measures photon emissions
- performs data reduction
- collects and maintains patient demographics and results

275

5. Statement of Intended Use

The intended use of the ACS:Centaur system is an automated immunoassay analyzer designed to perform in vitro diagnostic immunochemical assays analysis on clinical specimens using the ACS ilmmunoassays. The system menu will include endocrine, anemia, reproductive, cardiac, therapeutic drug, and infectious disease assays. All assays are based on chemiluminescent technology.

6. Summary of Technological Characteristics

ACS assays are dedicated for use on the ACS:180® and the ACS:Centaur utilizes acridinium ester as label and paramagnetic particles as the solid phase. Like the ACS:180®, the ACS:Centaur measures the amount of light emitted during the chemiluminescent reaction. There is direct relationship between the amount of light emitted and amount of antigen in the patient sample. The system will measure both competitive binding assays and sandwich assays.

The ACS:Centaur system uses a Master Curve and a two-point, user-initiated calibration to calibrate all the ACS assays. The Master Curve and the two-point calibration system eliminate the need to measure a full standard curve with each assay or to run calibrators each time the assay is run. The system stores the calibration for the interval specified in the assay product inserts.

Other Technological Features include:

- Photomultiplier used in the photon counting mode
- Automated pipetting of sample and reagents
- Electronic Fluid Sensing on sample and reagents
- Clog detection for samples
- Random access and batch test processing
- Varied test incubations
- Human Interface features including barcode reading, LIS, automated data reduction.
- Automated dilution capabilities

276

Comparison of
ACS:Centaur features to ACS:180 Plus features

Feature	ACS:180 Plus	ACS Next Generation
Principles of Operation	• Chemiluminescence using magnetic-particle solid phase and chemiluminescent label	• same
Optical System	• PMT used in photon counting mode	• same
Temp control	• Reactions are controlled at 37°C	• *Reactions* • Reactions controlled at 37°C • *Reagent Storage* • Reagents stored at 4 to 8°C

Dispense System	• Automated pipetting of samples and reagents
	• Precision syringes (sample and reagent)
	• Electrical fluid sensing on sample and reagent probes
	• Clog detection mechanism to alert operator to clogged sample probe
		• *Sample Probe - same*, except:
		  • Air pressure fluid sensing
		  • Air pressure disposable tip sensing
		  • Clog detection
		• *Reagent Probes - same*, except
		  • No level sense; probe sent to bottom of container
		  • Fluid monitoring during aspiration

Reagent and Sample Handling	• Sample carousel with 34 outer positions and 26 inner positions • Reagent carousel with 26 positions (13 pairs in usual configuration) • Sample tray inserts for other size sample tubes	• *Samples*: 5 tube racks hold sample tubes • Sample Input, In-Process and Output Queue holds up to 180 samples; Tube size selected on sample tube rack • *Assay Reagents:* Reagent Tray with 30 positions; Refrigeration; Reagent Pack contains both Solid Phase and Tracer Reagent in separate wells • *Ancillary Reagents:* Reagent Compartment with 15 positions; Refrigeration
Test Processing	• Random Access and Batch	• *same*, except: • sample scheduling optimized for throughput; Continuous Operation
Assay Protocols	• 8 minute incubation, single step	• 8 minute incubation, single step • 18 minute incubation, single step • 8 - 18 minute incubation, two step • 18 - 18 minute incubation, two step

Human Interface data output	• 9" CRT
	• External printers
	• Serial bi-directional LIS Interface
	• Audible (adjustable) beeper
	• Computer LIS Interface
		• *same*, except:
		  • 17" Color Monitor with Graphical User Interface
		  • External Modem for Remote Diagnostics Interface

Human Interface data input	• 101 key keyboard • Hand-held barcode reader • Stationary barcode scanners for id of patient samples and reagents • Computer LIS Interface	• *same*
Human Interface data analysis	• Automated data reduction • Assay-specific data reduction	• *same*
QC Software	• Stored control results • L-J plotting • Statistical enhancements • Compatibility with CCD QC Reporting	• *same*
Specimens	• Serum or plasma, sample cups or primary tubes may be used • Dilutions allowed on a per-assay basis • Capability of Dilution of Samples Requiring Pretreatment	• *same*

277

245

Disposables	• Sample cups
	• Reaction cuvettes
	• Cuvette loading and unloading allowed during run
	• Reagent 1 & 2 status tracked and displayed
		• *same*, except:
		  • Additional wash solutions (status tracked and displayed)
		  • Sample Pipette Tips
		  • All disposables may be loaded during operation
		  • All waste may be unloaded during operation

Reagents	• Solid Phase • Chemiluminescent label (Acridinium Ester) • Reagent volume reporting • Reagent inventory tracks bottle usage	• *same*, except: • Ancillary Reagents with inventory tracking and volume reporting
Calibrators	• 6 to 10 point stored calibration for each reagent • 2 point user run calibration • Calibrators checked with barcode • Calibrator lot numbers stored and displayed	• *same*
Controls	• Low, mid, and high constituent controls • Capability to dilute controls	• *same*
Physical	• Bench Model; 23Hx23Dx58L • 250lbs • <1200watts • Ambient temp 18-30C	• Floor Model; 60Hx42Dx58L • 1200 lbs. • <2000 watts • ambient temp 18-30C
Laboratory Automation	• Software controlled signals for interface to a robot for transfer of samples to and from a sample transport system	• *same*, except: • Software signals for direct sampling from the sample transport system
Other User Interface Features	• Stat interrupt capability • Improved cleaning with Extended Operation Module • Improved User Interface for scheduling batch runs, report options, easy-to-use maintenance • Complete reporting of system status and logging of system events • Tracking on-board reagent usage • Support for foreign languages • Barcode extended to 128, 2 of 5 • On-Line Information System • System test extended to include slope and offset, dilution and overrange condition •	• *same*

Other Performance Features	• Throughput: 180 tests/hr
	• Time to First Result: 15 min.
	• On-board supplies
	• Cuvettes for 200 assays
	• Water for 200 assays
	• Solid and liquid waste container
		• *same*, except:
		  • Throughput: 120 to 240 tests/hr
		  • Time to First Result: 15 min., 30 min., 60 min. depending upon assay protocol
		  • On-board supplies for 1000 tests

ACS: Centaur

Labeling for System Fluids

7.75 x 2 inches

Acid Reagent
For In Vitro Diagnostic Use
For use with the ACS:Centaur System.
1500 ml/5000 Tests
0.5% H_2O_2
0.1 N HNO_3
Manufactured by:
Chiron Diagnostics Corporation
East Walpole, MA 02032 USA
Chiron Diagnostics Ltd
Halstead, Essex, CO9 2JS U.K.

Säure Reagenz
In Vitro Diagnosticum
Zur Anwendung mit dem ACS:Centaur System.
1500 ml/5000 Tests
0,5% H_2O_2
0,1 N HNO_3
Chiron Diagnostics GmbH
D-35453 Fernwald, Germany

Réactif Acide
Pour utilisation diagnostique in vitro
Pour utilisation sur le système ACS:Centaur.
1500 ml/5000 Tests
H_2O_2 0,5% et HNO_3 0,1 N
Chiron Diagnostics S.A.
Cergy Pontoise, France

Acid Reagente
Para uso diagnostico in Vitro
Da utilizzare con il sistema ACS:Centaur.
1500 ml/5000 Tests
0,5% H_2O_2
0,1 N HNO_3
Chiron Diagnostics S.p.A.
Cassina de' Pecchi (MI) Italy

Acid Reactivo
Para Uso Diagnóstico In Vitro
Para usarse con el sistema ACS:Centaur.
1500 ml/
5000 Pruebas
0,5% H_2O_2
0,1 N HNO_3

酸化剤
体外診断用医療品
1500mL / 5000テスト用
成分：0.5%過酸化水素、0.1mol/L硝酸
貯法：4～25℃
販売元：Chiron Diagnostics Corporation
輸入元：カイロン株式会社
：Chiron KK
東京都渋谷区恵比寿 1-19-15
Tokyo 150, Japan

CHIRON | DIAGNOSTICS

108286 Rev. A

ACS:Centaur

Acid Reagent

4–25°C

Cat/Art-Nr/Réf./カタログ
672177

Lot/Ch. B

Exp/Ablw Kc

Date Installed/Lösung eingesetzt am/Mise en place le/Data d'installazione/Fecha de instalación/XXXX

Artwork No., 108287, Rev. A

Base Reagent
For In Vitro Diagnostic Use
For use with the ACS:Centaur System.
1500 ml/5000 Tests
<0,25 N NaOH and surfactant

Manufactured by:
Chiron Diagnostics Corporation
East Walpole, MA 02032 USA
Chiron Diagnostics Ltd.
Halstead, Essex, CO9 2XX U.K.

Base Reagenz
In Vitro Diagnosticum
Zur Anwendung mit dem ACS:Centaur System.
1500 ml/5000 Tests
<0,25 N NaOH mit Detergenz

Chiron Diagnostics GmbH
D-35433 Hermsdorf, Germany

Réactif Base
Pour utilisation diagnostique in vitro
Pour utilisation sur le système ACS:Centaur.
1500 ml/5000 Tests
NaOH <0,25 N et surfactant

Chiron Diagnostics S.A.
Cergy Pontoise, France

Base Reagente
Per uso diagnostico In Vitro
Da utilizzare con il sistema ACS:Centaur.
1500 ml/5000 Tests
NaOH <0,25 N
a tensioattivo

Chiron Diagnostics S.r.l.
Comune de' Pezzoli (MI), Italy

Base Reactivo
Para Uso Diagnóstico In Vitro
Para usarse con el sistema ACS:Centaur.
1500 ml/
5000 Pruebas
<0,25 N NaOH
y surfactante

酸化剤助剤
体外診断用試薬
1500mL/5000テスト用
成分：0.25mol/L水酸化ナトリウム
保管：4～25℃

製造元：Chiron Diagnostics Corporation
輸入元：カイロン株式会社
：Chiron K.K.
東京都渋谷区恵比寿 1-19-15
Tokyo 150, Japan

CHIRON | DIAGNOSTICS

108283 Rev. A

ACS:Centaur

Base Reagent

4–25°C

Cat./Art. Nr./Réf./ カタログ
672177

Lot/Ch.-B.:

Date Installed/Lesing eingesetzt am/
Mise en place le/Data d'installazione/
Fecha de instalación/XXXX

Exp./Verw. bis

3/4" x 2

Sodium hydroxide
Irritating to eyes and skin. Wear suitable gloves and eyeface protection. In case of contact with eyes, rinse immediately with plenty of water and seek medical advice. In case of accident or if you feel unwell, seek medical advice immediately (show the label where possible).

Natriumhydroxid
Reizt die Augen und die Haut. Bei der Arbeit geeignete Schutzhandschuhe und Schutzbrille/Gesichtsschutz tragen. Bei Berührung mit den Augen sofort mit Wasser abspülen und einen Arzt konsultieren. Bei Unfall oder Unwohlsein sofort einen Arzt zuziehen (wenn möglich, dieses Etikett vorzeigen).

Hydroxyde de sodium
Irritant pour les yeux et la peau. Porter des gants appropriés et un appareil des yeux/du visage. En cas de contact avec les yeux, laver immédiatement et abondamment avec de l'eau et consulter un spécialiste. En cas d'accident ou de malaise, consulter immédiatement un médecin (lui montrer l'étiquette si possible).

Idrossido di sodio
Irritante per gli occhi e la pelle. Usare guanti adatti e proteggersi gli occhi/la faccia. In caso di contatto con gli occhi, lavare immediatamente e abbondantemente con acqua e consultare un medico. In caso di incidente o di malessere consultare immediatamente il medico (se possibile, mostrargli l'etichetta).

Hidróxido de sodio
Irrita los ojos y la piel. Úsense guantes adecuados y protección para los ojos/la cara. En caso de contacto con los ojos, lávese inmediata y abundantemente con agua y acúdase a un médico. En caso de accidente o malestar, acúdase inmediatamente al médico (si es posible, muéstrese la etiqueta).

水酸化ナトリウム
眼や皮膚への刺激性があります。適当な手袋、また眼、顔面の保護具を着用して下さい。眼に入った場合は大量の水で充分に洗い流すなどの応急処置を行い、医師の手当等を受けて下さい。事故あるいは体の不調を感じた場合は、医師の手当等を受けて下さい。（その際にはラベルを示して下さい。）

108290 Rev. A

5.5 x 2 inches

Artwork No., 108291, Rev. A

28

Acid + Base Reagents

Irritant
Reagent
Irritante
[illegible]

Chemical ingredient: Sodium hydroxide
Irritating to eyes and skin. Wear suitable gloves and eye/face protection. In case of contact with eyes, rinse immediately with plenty of water and seek medical advice. In case of accident, or if you feel unwell, seek medical advice immediately (show the label where possible).

Chemische Inhaltsstoffe: Natriumhydroxid
Reizt die Augen und die Haut. Bei der Arbeit geeignete Schutzhandschuhe und Schutzbrille/Gesichtsschutz tragen. Bei Berührung mit den Augen sofort mit Wasser ausspülen und Arzt konsultieren. Bei Unfall oder Unwohlsein sofort Arzt rufen (wenn möglich, diesen Etikett vorzeigen).

Principe de chimie: Hydroxyde de sodium
Irritant pour les yeux et la peau. Porter des gants appropriés et un appareil de protection des yeux/du visage. En cas de contact avec les yeux, bien rincer à l'eau immédiatement et consulter un spécialiste. En cas d'accident ou de malaise, consulter immédiatement un médecin (si possible lui montrer l'étiquette).

Componente chimico: Idrossido di sodio
Irritante per gli occhi e la pelle. Usare guanti adeguati e protezione per gli occhi/la faccia. In caso di contatto con gli occhi, lavare immediatamente e abbondantemente con acqua e consultare un medico. In caso di incidente o di malessere consultare immediatamente il medico (se possibile, mostrargli l'etichetta).

Componente químico: Hidróxido de sodio
Irrita los ojos y la piel. Usar guantes adecuados y protección para los ojos/la cara. En caso de contacto con los ojos, lavar inmediata y abundantemente con agua y acudir a un médico. En caso de accidente o malestar, acudir inmediatamente al médico (si es posible, muéstrele la etiqueta).

XXXXXXXXXXXX XXXXX
XXXXXXXXXX XXXXXXXXXXXXXXXX XXXXX XXXX XXXXXXXX
XXXXXXXX XXXX XXXXXXX XXXXXXXXXXXX XXXXXXXX XXXXXXXX XX
XXXXXXXXXXXXXXXX XXXX XXXXXXXX XXXXXXXX

Manufactured by
Chiron Diagnostics Corporation
East Walpole, MA 02032 USA

Chiron Healthcare Pty Ltd
Scoresby 3179, Australia

Chiron Diagnostics S.A.
Cergy Pontoise, France

Chiron Diagnostics GmbH
D-35463 Lemgo/Lippe, Germany

Chiron Ltd
Hong Kong

Chiron Diagnostics S.p.A.
Gaggiano (Pavia) (MI) Italy

Chiron K.K.
カイロン株式会社
東京都渋谷区千駄ヶ谷 [illegible]
Tokyo 150, Japan

Chiron, S.A. de C.V.
Xochimilco, México D.F. C.P. 16018, México

Chiron Diagnostics Ltd
Halstead, Essex, CO9 2HX, U.K.

[illegible]

Reagents
For In Vitro Diagnostic Use
For use with the ACS:Centaur system
Store at 18–25°C
Acid: 1500 mL/5000 tests, 0.5% H_2O_2, 0.1 N HNO_3
Base: 1500 mL/5000 tests, <0.25 N NaOH and surfactant

Reagenz
In Vitro Diagnosticum
Zur Anwendung mit dem ACS:Centaur Systemen.
Lagern bei 18–25°C
Acid: 1500 mL/5000 Tests, 0,5% H_2O_2, 0,1 N HNO_3
Base: 1500 mL/5000 Tests, <0,25 N NaOH mit Detergenz

Réactif
Pour utilisation diagnostique in vitro
Pour utilisation avec le système ACS:Centaur.
Conserver à 18–25°C
Acid: 1500 mL/5000 tubes, H_2O_2 0,5%, HNO_3 0,1 N
Base: 1500 mL/5000 tubes, <0,25 NaOH et surfactant

Reagente
Solo per uso diagnostico In Vitro
Da utilizzare su ACS:Centaur system
Conservare a 18–25°C
Acid: 1500 mL/5000 test, 0.5% H_2O_2, 0.1 N HNO_3
Base: 1500 mL/5000 test, NaOH <0.25 N e tensioattivo

Reactivo
Para Uso de Diagnóstico en Vitro
Para usarse con el ACS:Centaur system
Almacenar a temperatura de 18–25°C
Acid: 5000 Determinaciones/1500 mL, 0.5% H_2O_2, 0.1 N HNO_3
Base: 5000 Determinaciones/1500 mL, <0.25 N NaOH y surfactante

XXXX XXXXX
XXXXXXXXXXXXXXX
XXXX
XXXXXXXXXX
XXXXXXXXXXXXX
XXXXXXXXXXX
XXXXXXXXXXXXXXX
XXXXXXXXXX
XXXXXXXXXXX

CHIRON | DIAGNOSTICS

9 x 4.25 inches

18–25°C

Acid + Base Reagents

Cat./Art Nr.:
112219

Avoid exposure to light. Store in the box.
Vor Licht suhützen. Ju der Verpackung aufbewahren.
Eviter l'exposition à la lumière. Conserver dans la boîte.
Evite exponer a la luz. Almacenar en la caja.
Non exporre alla luce. Conservare nella scatola.
XXXXXXXXXXXXXXXXXXXXXXXXXXX XXX

Kit/Trousse/
Juego/XXXXXX
Lot/Ch.-B:
3334455
Exp./Verw. bis:
30SEPT96

	Lot/Ch.-B
Acid/Xxxx/XXX	3334455
Base/Xxxx/XXX	4446677

5 x 4.25 inches

283

510(k) Number (if known): _____

Device Name: **Chiron Diagnostics ACS:Centaur System**

Indications for Use:

The intended use of the ACS:Centaur system is an automated immunoassay analyzer designed to perform in vitro diagnostic immunochemical assays analysis on clinical specimens using the ACS ilmmunoassays. The system menu will include endocrine, anemia, reproductive, cardiac, therapeutic drug, and infectious disease assays. All assays are based on chemiluminescent technology.proteins and is an indirect indicator of thyroid status.4

(Division Sign-Off)
Division of Clinical Laboratory Devices
510(k) Number K974118

(PLEASE DO NOT WRITE BELOW THIS LINE--CONTINUE ON ANOTHER PAGE, IF NEEDED)

Concurrence of CDRH, Office of Device Evaluation (ODE)

Prescription Use ✓
(Per 21 CFR 801.109)

OR

Over-The-Counter Use _____
(Optional Format 1-2-96)

284

K974 11418

JUL 17 1997

ACS Centaur

Summary of Safety and Effectiveness

As required by 21 CFR 807.92, the following 510(k) Summary is provided:

1. **Submitters Information**

Contact person: William J. Pignato
Director of Regulatory Affairs

Address: Chiron Diagnostics Corporation
63 North Street
Medfield, MA 02052

Phone: 508 359-3825

Date Summary Prepared: April 14, 1997

2. **Device Information**

Proprietary Name: ACS:Centaur Analyzer
Common Name: Automated Immunoassay Analyzer
Classification Name: Photometric Analyzer for Clinical Use
Classification Number: 21 CFR 862.2160, Class I

3. **Predicate Device Information**

Name: ACS:180® Analyzer
Manufacturer: Chiron Diagnostics Corporation (formally Ciba Corning Diagnostics Corp.)
510(k) Number: D.C. #K902336.

4. **Device Description**

The ACS:Centaur system is a stand-alone, continuous operation, immunochemistry analyzer. The system performs the following functions.

- aspirates and dispenses samples
- performs dilutions
- adds reagents
- incubates reaction vessels
- separates solid and liquid waste
- measures photon emissions
- performs data reduction
- collects and maintains patient demographics and results

285

5. Statement of Intended Use

The intended use of the ACS:Centaur system is an automated immunoassay analyzer designed to perform in vitro diagnostic immunochemical assays analysis on clinical specimens using the ACS iImmunoassays. The system menu will include endocrine, anemia, reproductive, cardiac, therapeutic drug, and infectious disease assays. All assays are based on chemiluminescent technology.

6. Summary of Technological Characteristics

ACS assays are dedicated for use on the ACS:180® and the ACS:Centaur utilizes acridinium ester as label and paramagnetic particles as the solid phase. Like the ACS:180®, the ACS:Centaur measures the amount of light emitted during the chemiluminescent reaction. There is direct relationship between the amount of light emitted and amount of antigen in the patient sample. The system will measure both competitive binding assays and sandwich assays.

The ACS:Centaur system uses a Master Curve and a two-point, user-initiated calibration to calibrate all the ACS assays. The Master Curve and the two-point calibration system eliminate the need to measure a full standard curve with each assay or to run calibrators each time the assay is run. The system stores the calibration for the interval specified in the assay product inserts.

Other Technological Features include:

- Photomultiplier used in the photon counting mode
- Automated pipetting of sample and reagents
- Electronic Fluid Sensing on sample and reagents
- Clog detection for samples
- Random access and batch test processing
- Varied test incubations
- Human Interface features including barcode reading, LIS, automated data reduction.
- Automated dilution capabilities

286

DEPARTMENT OF HEALTH & HUMAN SERVICES

Public Health Service

Food and Drug Administration
2098 Gaither Road
Rockville MD 20850

JUL 17 1997

Thomas F. Flynn
Manager, Regulatory Affairs & Compliance
Chiron Diagnostics Corporation
63 North Street
Medfield, Massachusetts 02052-1688

Re: K971418
ACS Centaur Analyzer
Regulatory Class: I
Product Code: JJE
Dated: June 26, 1997
Received: June 27, 1997

Dear Mr. Flynn:

We have reviewed your Section 510(k) notification of intent to market the device referenced above and we have determined the device is substantially equivalent (for the indications for use stated in the enclosure) to devices marketed in interstate commerce prior to May 28, 1976, the enactment date of the Medical Device Amendments or to devices that have been reclassified in accordance with the provisions of the Federal Food, Drug, and Cosmetic Act (Act). You may, therefore, market the device, subject to the general controls provisions of the Act. The general controls provisions of the Act include requirements for annual registration, listing of devices, good manufacturing practice, labeling, and prohibitions against misbranding and adulteration.

If your device is classified (see above) into either class II (Special Controls) or class III (Premarket Approval), it may be subject to such additional controls. Existing major regulations affecting your device can be found in the Code of Federal Regulations, Title 21, Parts 800 to 895. A substantially equivalent determination assumes compliance with the current Good Manufacturing Practice requirement, as set forth in the Quality System Regulation (QS) for Medical Devices: General regulation (21 CFR Part 820) and that, through periodic (QS) inspections, the Food and Drug Administration (FDA) will verify such assumptions. Failure to comply with the GMP regulation may result in regulatory action. In addition, FDA may publish further announcements concerning your device in the Federal Register. Please note: this response to your premarket notification submission does not affect any obligation you might have under sections 531 through 542 of the Act for devices under the Electronic Product Radiation Control provisions, or other Federal Laws or Regulations.

287

Under the Clinical Laboratory Improvement Amendments of 1988 (CLIA-88), this device may require a CLIA complexity categorization. To determine if it does, you should contact the Centers for Disease Control and Prevention (CDC) at (770) 488-7655.

This letter will allow you to begin marketing your device as described in your 510(k) premarket notification. The FDA finding of substantial equivalence of your device to a legally marketed predicate device results in a classification for your device and thus, permits your device to proceed to the market.

If you desire specific advice for your device on our labeling regulation (21 CFR Part 801 and additionally 809.10 for in vitro diagnostic devices), please contact the Office of Compliance at (301) 594-4588. Additionally, for questions on the promotion and advertising of your device, please contact the Office of Compliance at (301) 594-4639. Also, please note the regulation entitled, "Misbranding by reference to premarket notification" (21 CFR 807.97). Other general information on your responsibilities under the Act may be obtained from the Division of Small Manufacturers Assistance at its toll-free number (800) 638-2041 or (301) 443-6597 or at its internet address "http://www.fda.gov/cdrh/dsmamain.html".

Sincerely yours,

Steven Gutman

Steven I. Gutman, M.D., M.B.A.
Director
Division of Clinical
Laboratory Devices
Office of Device Evaluation
Center for Devices and
Radiological Health

Enclosure

510(k) Number (if known): _____

Device Name: **Chiron Diagnostics ACS:Centaur System**

Indications for Use:

The intended use of the ACS:Centaur system is an automated immunoassay analyzer designed to perform in vitro diagnostic immunochemical assays analysis on clinical specimens using the ACS ilmmunoassays. The system menu will include endocrine, anemia, reproductive, cardiac, therapeutic drug, and infectious disease assays. All assays are based on chemiluminescent technology.proteins and is an indirect indicator of thyroid status.[4]

(Division Sign-Off)
Division of Clinical Laboratory Devices
510(k) Number K974118

(PLEASE DO NOT WRITE BELOW THIS LINE--CONTINUE ON ANOTHER PAGE, IF NEEDED)

Concurrence of CDRH, Office of Device Evaluation (ODE)

Prescription Use ✓
(Per 21 CFR 801.109)

OR

Over-The-Counter Use _____
(Optional Format 1-2-96)

289

DEPARTMENT OF HEALTH & HUMAN SERVICES

Public Health Service

Food and Drug Administration
2098 Gaither Road
Rockville MD 20850

CH

APR 3 1998

William J. Pignato
Director of Regulatory Affairs
Chiron Diagnostics
63 North Street
Medfield, Massachusetts 02052-1688

Re: K971418
Chiron Diagnostics ACS Systems and Immunoassays
Dated: March 12, 1998
Received: March 16, 1998

Dear Mr. Pignato:

We have reviewed the information dated March 12, 1998, regarding the 510(k) notification K971418 previously submitted for the device referenced above. Based solely on the information that you have provided, it does not appear that you have significantly changed or modified the design, components, method of manufacture, or intended use of the device referenced above (see 21 CFR 807.81(a)(3)). It is, however, your responsibility to determine if the change or modification to the device or its labeling could significantly affect the device's safety or effectiveness and thus require submission of a new 510(k). The information you have supplied regarding the application of the same ACS:180 reagents (FT4, FT3, T3, T4, TSH, TSH-3, T Uptake, Total hCG, LH, FSH, Progesterone and Estradiol-6) to the ACS:Centaur in according with the FDA Guidance: "Data for Commercialization of Original Equipment Manufacturer, Secondary and Generic Reagents for Automated Analyzers", will be added to the file.

Sincerely yours,

Alfred Montgomery, D.V.M.
Acting Branch Chief, Clinical
Chemistry, Toxicology, and
Hematology Branch
Division of Clinical
Laboratory Devices
Office of Device Evaluation
Center for Devices and
Radiological Health

290

DCLD 510(K) ROUTE SLIP

K971418/A2 ADD-TO

510(k) No.: ~~K971418~~	Reviewer: CCB	Keywords:
Applicant: Chiron Diag.	Assigned: 3/19	1. SRP
Date Rec'd: 3/16	Received: 3-19	2. OEM
Branch: CLCB		3. Analyzer-Centaur
		4.

Division Last Action:

Date:	Action:	Initials:	Logout Date:
3/19	LR	D	
3/25	K.25	CCB	
3/31/98	FT	KNG	
3/31/98	letterproof	CCB	
3-31-98	[illegible]	[illegible]	

291

DEPARTMENT OF HEALTH & HUMAN SERVICES

Public Health Service
Food And Drug Administration

Memorandum

Date: 3/17/98

From: Document Mail Center (HFZ-401)

Subject: Premarket Notification Number(s): K971418 / A2

To: Division Director: CH DCLD

The attached information has been received by the 510(k) Document Mail Center (DMC), on the above referenced 510(k) submission(s). Since a final decision has been rendered, this record is officially closed.

Please review the attached document and return it to the DMC, with one of the statements checked below. Feel free to note any additional comments below.

Thank you for your cooperation.

✓ Information does not change status of the 510(k); no other action required by the DMC; please add to the image file. [THE DIVISION SHOULD PREPARE A CONFIRMATION LETTER - AN EXAMPLE IS AVAILABLE ON THE LAN (K25). THIS DOES NOT APPLY TO TRANSFER OF OWNERSHIP. PLEASE BRING ANY TRANSFER OF OWNERSHIP TO POS.]

_____ Additional information requires a new 510(k) however the information submitted is incomplete. Notify the company to submit a new 510(k). [THE DIVISION SHOULD PREPARE THE (K30) LETTER ON THE LAN.]

_____ Additional information requires a new 510(k); please process. [THIS INFORMATION WILL BE MADE INTO A NEW 510(k)].

_____ No response necessary (e.g., hard copy of fax for the truthful and accuracy statement or 510(k) statement).

This information should be returned to the DMC within 10 working days from the date of this memorandum.

Reviewed by: Carol C. Benson Received 3-19-98

Date: 3-25-98

292

3

K971418/A2

CHIRON | DIAGNOSTICS

Chiron Diagnostics Corporation
63 North Street
Medfield, Massachusetts 02052
508-359-7411 Fax 508-359-4500

March 12, 1998

FDA/CDRH/CDRH
1998 MAR 13 PM 3:02

U.S. Food and Drug Administration
Center for Devices and Radiological Heath
Document Mail Center (HFZ-401)
9200 Corporate Blvd.
Rockville, MD 20650

Re: Chrion Diagnostics ACS Systems and Immunoassays

Data for Commercialization of Original Equipment Manufacturer, Secondary and Generic Reagents for Automated Analyzers

Chiron Diagnostics is submitting the required information in accordance with the FDA Guidance: "Data for Commercialization of Original Equipment Manufacturer, Secondary and Generic Reagents for Automated Analyzers". Chiron plans to place in use the same assays currently cleared by FDA on its a ACS:180 analyzers for use on its ACS: Centaur analyzer. A chart of the comparison of features for the ACS: Centaur vs. ACS:180 is enclosed.

K971418

The first list of reagents currently approved for use on the ACS:180 and intended for use on the Centaur are following thyroid and reproductive immunoassays:

- ACS FT4 K961510
- ACS FT3 K940482
- ACS T3 K923646
- ACS T4 K905532
- ACS TSH K910981
- ACS TSH-3 K951796
- ACS T Uptake K970539
- ACS Total hCG K925277
- ACS LH K962041
- ACS FSH K904649
- ACS Progesterone K932955
- ACS Estradiol-6 K954697

ACS: 180 Systems DC# K902336/K940810 (K940810)

There are no changes in the formulation or design of the assays intended for use on both systems. Additionally, the placement of the these reagent on the ACS Centaur have been reviewed in accordance with "Deciding When to Submit a 5109k) for a

293

SK-30

Change to an Existing Device". The review determined that there were no changes requiring a new 510(k).

Testing of assays on the ACS Centaur was conducted in accordance with the enclosed Performance Study Protocol submitted on September 19, 1996 and subsequently accepted for the file by FDA. In conducting the reagent performance studies, some non-significant changes were made in the protocol having no impact on the quality of the review. These include:

(b)(4)

[redacted]

We trust this information meets the requirements of Guidance.

If there are any questions, please contact me.

Sincerely

William J. Pignato
Director of Regulatory Affairs
(508) 359-3825
(508) 359-3885

294

Feature	ACS:180	ACS:Centaur
QC Software	• Stored control results • L-J plotting • Statistical enhancements • Compatibility with CCD QC Reporting	• same
Specimens	• Serum or plasma, sample cups or primary tubes may be used • Dilutions allowed on a per-assay basis • Capability of Dilution of Samples Requiring Pretreatment	• same
Reagents	• Reagent volume reporting • Reagent inventory tracks bottle usage	• same
Calibrators	• 6 to 10 point stored calibration for each reagent • 2 point user run calibration • Calibrators checked with barcode • Calibrator lot numbers stored and displayed	• same
Controls	• Low, mid, and high constituent controls • Capability to dilute controls	• same
Physical	• Bench Model; 23Hx23Dx58L • 250lbs • <1200watts • Ambient temp 18-30C	• Floor Model; 60Hx42Dx58L • 1200 lbs. • <2000 watts • Ambient temp 18-30C
Other User Interface Features	• Stat interrupt capability • Improved cleaning with Extended Operation Module • Improved User Interface for scheduling batch runs, report options, easy-to-use maintenance • Complete reporting of system status and logging of system events • Tracking on-board reagent usage • Support for foreign languages • Barcode extended to 128, 2 of 5 • On-Line Information System • System test extended to include slope and offset, dilution and overrange condition •	• same
Other Performance Features	• Throughput: 180 tests/hr • Time to First Result: 15 minutes • On-board supplies for 200 tests	• Throughput: 240 tests/hr • Time to First Result: 15 min, 30 min, or 60 min depending upon assay protocol • On-board supplies for 1000 tests

Instrum. Comparison
ACS:Centaur and ACS:180

Feature	ACS:180	ACS:Centaur
Principle of Operation	• Chemiluminescence using magnetic-particle solid phase and chemiluminescent label	• same
Optical System	• PMT used in photon counting mode	• same
Temperature Control	• Reactions are controlled at 37°C	*Reactions* • Reactions controlled at 37°C *Reagent Storage* • On-board refrigeration

Dispense System	*Sample & Reagent Probes*
	• Automated pipetting of samples and reagents
	• Precision syringes (sample and reagent)
	• Fluid sensing on sample and reagent probes
	• Clog detection mechanism to alert operator to clogged sample probe
		• *Sample Probe* - same, plus
		  • disposable probe tips
		• *Reagent Probes* - same, plus
		  • fluid monitoring during aspiration

Sample and Reagent Handling	*Sample Handling* • Sample carousel with 34 outer positions and 26 inner positions • Sample tray inserts for other size sample tubes *Reagent Handling* • Reagent carousel with 26 positions (13 pairs in usual configuration)	*Sample Handling* • Sample tubes, 5 tubes per rack up to 180 samples *Reagent Handling* • Assay Reagents: Reagent compartment with 30 positions • Ancillary Reagents: Reagent compartment with 15 positions
Test Processing	• Random Access and Batch	• same

Assay Protocols	• approximately 8 minutes	• same, plus
		  • 18 minute incubation, single step
		  • 8-18 minute incubation, two step
		  • 18-18 minute incubation, two step

Human Interface / Data Output	• 9" CRT
	• External printers
	• Serial bi-directional LIS Interface
	• Audible (adjustable) beeper
	• Computer LIS Interface
		• same, plus
		  • 17" Color Monitor with Graphical User Interface
		  • External Modem for Remote Diagnostics Interface

Human Interface / Data Input	• 101 key keyboard • Hand-held barcode reader • Stationary barcode scanners for id of patient samples and reagents • Computer LIS Interface	• same
Human Interface / Data Analysis	• Automated data reduction • Assay-specific data reduction	• same

294

CIBA·CORNING

Ciba Corning Diagnostics Corp.
53 North Street
Medfield, MA 02052-1688
Telephone 508-359-7711

September 19, 1996

FDA/CDRH/ODE/DHC
1996 SEP 23 PM 3:13

U.S. Food and Drug Administration
Center for Devices and Radiological Health
Office of Device and Evaluation
Document Mail Center (HFZ-401)
9200 Corporate Blvd.
Rockville, MD 20850

Re: Performance Study Protocol for ACS:180® and 180 Plus
Document Controls # K902336 and K940810

In accordance with the Division of Clinical Laboratory Devices Guidance "Data Required for Commercialization of Primary, Secondary, and Generic Reagents for Automated Analyzers", we are submitting for the ACS:180® and ACS:180 Plus file a copy of the "Performance Study Protocol" as outline in the subject Guidance.

The previously cleared ACS systems are automated analyzers that are manufactured by Ciba Corning Diagnostics Corp. (A Chiron Company), the original equipment manufacturer (0EM). The currently approved reagents which are manufactured by or for Ciba Corning are considered Primary reagents that are dedicated for use solely on the ACS systems.

For any subsequent models of the same system, reagent performance studies will be conducted and documented for the reagents intended for the new models. The protocol which follows the requirements set forth in Table I of the Guidance is presented in the attachment.

Any new analytes not previously approved will require submission of an original 510(k). Any approved assay that is modified will be review to determined if the change(s) significantly affects the safety and effectiveness of the device. Changes will be reviewed and referenced to the FDA Guidance "Deciding when to submit a 510(k) for a Change in to an Existing Device", Draft #2 August 1, 1995.

If you have any question, please feel free to contact me.

Sincerely

William J. Pignato
Director of Regulatory Affairs
(508) 359-3825
(508) 359-3885 FAX
william.pignato@cibadiag.com

297

K971418

Bayer

Business Group Diagnostics

Bayer Corporation
63 North Street
Medfield, MA 02052-1688
Phone: 508 359-7711
Fax: 508 359-3599

REDACTED BY MFR

May 4, 2000

Freedom of Information Staff, HFZ-82
Center for Devices and Radiological Health, FDA
2094 Gaither Road
Rockville, MD 20850

RE: **F97-31144**
Chiron Diagnostics ACS: Centaur Analyzer K971418
Redacted Information

Dear Sir or Madam:

Enclosed is the redacted copy of the above referenced information. In the enclosed copy, pages 9-22, 28, 251-253, have been redacted. If you require additional information, please contact me.

Sincerely,

William Pignato

William J. Pignato, Director
Regulatory Affairs
Ph. 508-359-3825
Fax 508-359-3356
William.Pignato.b@Bayer.com

1

VEJ

H:\wp\requal\redact

DEPARTMENT OF HEALTH & HUMAN SERVICES

Public Health Service

Food and Drug Administration
2098 Gaither Road
Rockville MD 20850

JUL 17 1997

Thomas F. Flynn
Manager, Regulatory Affairs & Compliance
Chiron Diagnostics Corporation
63 North Street
Medfield, Massachusetts 02052-1688

Re: K971418
ACS Centaur Analyzer
Regulatory Class: I
Product Code: JJE
Dated: June 26, 1997
Received: June 27, 1997

Dear Mr. Flynn:

We have reviewed your Section 510(k) notification of intent to market the device referenced above and we have determined the device is substantially equivalent (for the indications for use stated in the enclosure) to devices marketed in interstate commerce prior to May 28, 1976, the enactment date of the Medical Device Amendments or to devices that have been reclassified in accordance with the provisions of the Federal Food, Drug, and Cosmetic Act (Act). You may, therefore, market the device, subject to the general controls provisions of the Act. The general controls provisions of the Act include requirements for annual registration, listing of devices, good manufacturing practice, labeling, and prohibitions against misbranding and adulteration.

If your device is classified (see above) into either class II (Special Controls) or class III (Premarket Approval), it may be subject to such additional controls. Existing major regulations affecting your device can be found in the Code of Federal Regulations, Title 21, Parts 800 to 895. A substantially equivalent determination assumes compliance with the current Good Manufacturing Practice requirement, as set forth in the Quality System Regulation (QS) for Medical Devices: General regulation (21 CFR Part 820) and that, through periodic (QS) inspections, the Food and Drug Administration (FDA) will verify such assumptions. Failure to comply with the GMP regulation may result in regulatory action. In addition, FDA may publish further announcements concerning your device in the Federal Register. Please note: this response to your premarket notification submission does not affect any obligation you might have under sections 531 through 542 of the Act for devices under the Electronic Product Radiation Control provisions, or other Federal Laws or Regulations.

2

Under the Clinical Laboratory Improvement Amendments of 1988 (CLIA-88), this device may require a CLIA complexity categorization. To determine if it does, you should contact the Centers for Disease Control and Prevention (CDC) at (770) 488-7655.

This letter will allow you to begin marketing your device as described in your 510(k) premarket notification. The FDA finding of substantial equivalence of your device to a legally marketed predicate device results in a classification for your device and thus, permits your device to proceed to the market.

If you desire specific advice for your device on our labeling regulation (21 CFR Part 801 and additionally 809.10 for in vitro diagnostic devices), please contact the Office of Compliance at (301) 594-4588. Additionally, for questions on the promotion and advertising of your device, please contact the Office of Compliance at (301) 594-4639. Also, please note the regulation entitled, "Misbranding by reference to premarket notification" (21 CFR 807.97). Other general information on your responsibilities under the Act may be obtained from the Division of Small Manufacturers Assistance at its toll-free number (800) 638-2041 or (301) 443-6597 or at its internet address "http://www.fda.gov/cdrh/dsmamain.html".

Sincerely yours,

Steven Gutman

Steven I. Gutman, M.D., M.B.A.
Director
Division of Clinical
Laboratory Devices
Office of Device Evaluation
Center for Devices and
Radiological Health

Enclosure

5. **Statement of Intended Use**

The intended use of the ACS:Centaur system is an automated immunoassay analyzer designed to perform in vitro diagnostic immunochemical assays analysis on clinical specimens using the ACS ilmmunoassays. The system menu will include endocrine, anemia, reproductive, cardiac, therapeutic drug, and infectious disease assays. All assays are based on chemiluminescent technology.

6. **Summary of Technological Characteristics**

ACS assays are dedicated for use on the ACS:180® and the ACS:Centaur utilizes acridinium ester as label and paramagnetic particles as the solid phase. Like the ACS:180®, the ACS:Centaur measures the amount of light emitted during the chemiluminescent reaction. There is direct relationship between the amount of light emitted and amount of antigen in the patient sample. The system will measure both competitive binding assays and sandwich assays.

The ACS:Centaur system uses a Master Curve and a two-point, user-initiated calibration to calibrate all the ACS assays. The Master Curve and the two-point calibration system eliminate the need to measure a full standard curve with each assay or to run calibrators each time the assay is run. The system stores the calibration for the interval specified in the assay product inserts.

Other Technological Features include:

- Photomultiplier used in the photon counting mode
- Automated pipetting of sample and reagents
- Electronic Fluid Sensing on sample and reagents
- Clog detection for samples
- Random access and batch test processing
- Varied test incubations
- Human Interface features including barcode reading, LIS, automated data reduction.
- Automated dilution capabilities

4

DEPARTMENT OF HEALTH & HUMAN SERVICES

Public Health Service
Food And Drug Administration

Memorandum

Date July 14, 1997

From: Reviewer(s) - Name(s) **JAMES V. CALLAGHAN**

Subject: 510(k) Number **K971418**

To: The Record - It is my recommendation that the subject 510(k) Notification:

- ☐ Refuse to accept.
- ☐ Requires additional information (other than refuse to accept).
- ☒ Accepted for review **April 22, 1997**
- ☒ Is substantially equivalent to marketed devices.
- ☐ NOT substantially equivalent to marketed devices.
- ☐ Other (e.g., exempt by regulation, not a device, duplicate, etc.)

Is this device subject to Postmarket Surveillance?	☐ YES	☒ NO
Is this device subject to the Tracking Regulation?	☐ YES	☒ NO
Was clinical data necessary to support the review of this 510(k)?	☐ YES	☒ NO
Is this a prescription device?	☐ YES	☒ NO
Was this 510(k) reviewed by a Third Party?	☐ YES	☒ NO

This 510(k) contains:

Truthful and Accurate Statement ☐ Requested ☒ Enclosed
(required for originals received 3-14-95 and after)

☒ A.510(k) summary OR ☐ A 510(k) statement

☐ The required certification and summary for class III devices

☒ The indication for use form (required for originals received 1-1-96 and after)

The submitter requests under 21 CFR 807.95 (doesn't apply for SEs):

☐ No Confidentiality ☒ Confidentiality for 90 days ☐ Continued Confidentiality exceeding 90 days

Predicate Product Code with panel and class:

JJE/75/I

Additional Product Code(s) w panel (optional)

REVIEW: CLCB 7-15-97
(Branch Chief) (Branch Code) (Date)

FINAL REVIEW: 7/16/97
(Division Director) (Date)

Rec'd. 7/16

5

Revised:11-20-96

510(k) "SUBSTANTIAL EQUIVALENCE" DECISION-MAKING PROCESS (DETAILED)

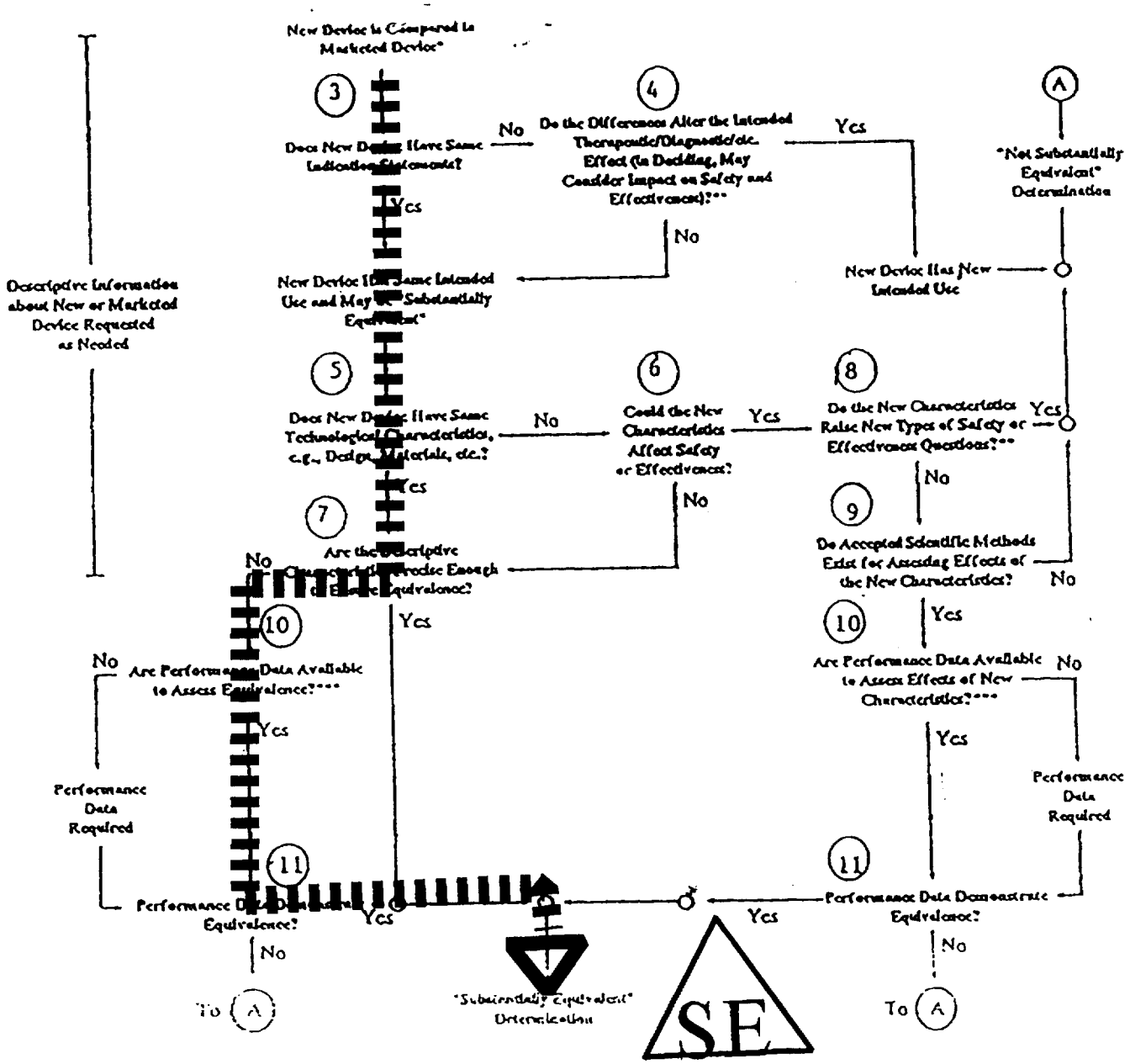

* 510(k) submissions compare new devices to marketed devices. FDA requests additional information if the relationship between marketed and "predicate" (pre-Amendments or reclassified post-Amendments) devices is unclear.

** This decision is normally based on descriptive information alone, but limited testing information is sometimes required.

*** Data may be in the 510(k), other 510(k)s, the Center's classification files, or the literature.

REVISED:3/14/95

THE 510(K) DOCUMENTATION FORMS ARE AVAILABLE ON THE LAN UNDER 510(K) BOILERPLATES TITLED "DOCUMENTATION" AND MUST BE FILLED OUT WITH EVERY FINAL DECISION (SE, NSE, NOT A DEVICE, ETC.).

"SUBSTANTIAL EQUIVALENCE" (SE) DECISION MAKING DOCUMENTATION

K971418

Reviewer: JAMES V. CALLAGHAN

Division/Branch: DCLD/CLCB

Device Name: CHIRON DIAGNOSTICS AUTOMATED CHEMILUMINESCENCE SYSTEM (ACS) CENTAUR ANALYZER

Product To Which Compared (510(K) Number If Known): CIBA CORNING ACS:180 AUTOMATED CHEMILUMINESCENCE K902336

	YES	NO	
1. Is Product A Device	✔		If **NO** = Stop
2. Is Device Subject To 510(k)?	✔		If **NO** = Stop
3. Same Indication Statement?	✔		If **YES** = Go To 5
4. Do Differences Alter The Effect Or Raise New Issues of Safety Or Effectiveness?		✔	If **YES** = Stop **NE**
5. Same Technological Characteristics?	✔		If **YES** = Go To 7
6. Could The New Characteristics Affect Safety Or Effectiveness?			If **YES** = Go To 8
7. Descriptive Characteristics Precise Enough?		✔	If **NO** = Go To 10 If **YES** = Stop **SE**
8. New Types Of Safety Or Effectiveness Questions?			If **YES** = Stop **NE**
9. Accepted Scientific Methods Exist?			If **NO** = Stop **NE**
10. Performance Data Available?	✔		If **NO** = Request Data
11. Data Demonstrate Equivalence?	✔		Final Decision: **SE**

Note: In addition to completing the form on the LAN, "yes" responses to questions 4, 6, 8, and 11, and every "no" response requires an explanation.

7

DEPARTMENT OF HEALTH & HUMAN SERVICES

Public Health Service
Food And Drug Administration
Memorandum

DATE: **July 14, 1997**

FROM: **James V. Callaghan** **CLCB**

TO: **The Record**

SUBJECT: **CHIRON DIAGNOSTICS CORP.'s, 510k submission for the CHIRON DIAGNOSTICS AUTOMATED CHEMILUMINESCENCE SYSTEM (ACS) CENTAUR ANALYZER**

K971418 ..... Submission - Clinical Chemistry Branch For Tier II
Content and Format of a 510k Submission as specified under 21 CFR 807.90

1. Submitter's name, **CHIRON DIAGNOSTICS CORP.**

Address: ..... 63 NORTH ST.
..... MEDFIELD, MA 02052
Telephone ..... 508 -359-7711 Fax 508 -359-3599
Contact person, ... WILLIAM J. PIGNATO
Establishment Registration Number: 1519113

2. Device name: **CHIRON DIAGNOSTICS AUTOMATED CHEMILUMINESCENCE SYSTEM (ACS) CENTAUR ANALYZER**

Proprietary/Trade name: CHIRON DIAGNOSTICS AUTOMATED CHEMILUMINESCENCE SYSTEM (ACS) CENTAUR ANALYZER
Common Name: .... ANALYZER, CHEMISTRY (PHOTOMETRIC, DISCRETE), FOR CLINICAL USE
Classification Name: ..... Discrete Photometric Chemistry Analyzere
- ..... Discrete Photometric Chemistry Analyzer

Primary Regulatory information
Device Classification: I
Regulation Number: ..... 21 CFR 862.2160
Product Code: ..... JJE
Panel: ..... CH

3. Identification of the Predicate Device:

Predicate Device Name ..... CIBA CORNING ACS:180 AUTOMATED CHEMILUMINESCENCE
Manufacturer ..... CIBA CORNING DIAGNOSTICS CORP.
510k Number or Clearance Information - K902336
Predicate Device Labeling ..... see N/A (on file)

- A complete description of the subject device is included in the submission.
- ..... see Page 249 of original submission

4. A statement of the Intended Use and Indications for Use of the subject device is included in the submission
- ..... see Page 259 of original submission

8

5. Substantial Equivalence

An adequate discussion is included, of how the CHIRON DIAGNOSTICS AUTOMATED CHEMILUMINESCENCE SYSTEM (ACS) CENTAUR ANALYZER is substantially equivalent to the CIBA CORNING ACS:180 AUTOMATED CHEMILUMINESCENCE. Relevant topics such as a descriptive comparison of the following items: methodology, test principle, sample requirements, physical dimensions, throughput, analysis time, software support, calibration requirements, etc.

- ..... see Pages 249-250 of original submission

6. Technological Characteristics of the Device

A discussion is provided of information concerning the operation, function, methodology, and principles of the subject device.

- ..... see Pages 249-250 of original submission

7. Performance Characteristics and Data

A discussion of the performance data for the subject device including protocols, raw data points, graphical representation, and analyses or conclusions for the following parameters as applicable (see check list) and:

- ..... see Sections 3 & 4 dated July 2, 1997

8. Labeling/Promotional Materials

Provided are of the labeling. Labeling conforms to the format and order of 809.10(b) (see check list) and see: Operator manual of original submission

9. Summary of Safety & Effectiveness in the format specified under 21 CFR 807.92

10. Truthful & Accurate Statement

- ..... see Page 15 of original submission

11. Indications for Use Form

- ..... see Page 259 of original submission

12. Software documentation that conforms to Reviewer Guidance for Computer Controlled Medical Devices Undergoing 510(k) Review.

- Description ..... see Pages 251-253 of original submission
- Certification Statement ..... see Section 5 dated July 2, 1997

In order to complete K971418, CHIRON DIAGNOSTICS CORP. adequatly responced to unable to Determine letter dated June 11, 1997

Based on the materials reviewed in CHIRON DIAGNOSTICS CORP.'s premarket notification, I recommend finding the CHIRON DIAGNOSTICS AUTOMATED CHEMILUMINESCENCE SYSTEM (ACS) CENTAUR ANALYZER Substantially Equivalent to other Discrete Photometric Chemistry Analyzere regulation 21 CFR 862.2160 Class I Device.

James V. Callaghan, MT(ASCP)
Scientific Reviewer
FDA/CDRH/DCLD/CLCB

9 8

Chiron Diagnostics Corp.'S, Submission For The Chiron Diagnostics Automated Chemiluminescence System (Acs) Centaur Analyzer					
Check each box either: Present (Yes/"Y") or Not Present (No/"N"/Not applicable). Provide an explanation for every item indicated as either "N" or "N/A"					
Specific Performance Characteristics			Y	N	N/A
	Method Comparison	- Slope, Intercept	✔ ☐		
		- Correlation	✔ ☐		
		- Range of Samples	✔ ☐		
		- Standard Error Est.	✔ ☐		
		- Bias	✔ ☐		
		- Number (N=) - Sample Comparability for Each Sample Type Claimed, e.g., Whole Blood, Serum, Plasma, Etc.	✔ ☐		
		-Sample Comparability for Each Sample Type Claimed, e.g., Whole Blood, Serum, Plasma, Etc.	✔ ☐		
2)	Precision	Within-run (Assay), and	✔ ☐		
		Between-run (Assay), or Total	✔ ☐		
		Mean(s), Calculated CV's & SD's	✔ ☐		
3)	Linearity	Recovery, Dilution, Parallelism, Other, Etc.			✔ ☐
4)	Sensitivity	Min. Detection Limit or Analytical Sensitivity	✔ ☐		
		Cutoff	✔ ☐		
	High Dose Hook Effect	High Dose Effect			✔ ☐
6)	Interferences	Bilirubin, Hemoglobin, Lipids (Triglycerides), Other, Drugs, Anticoagulants, Etc.			✔ ☐
7)	Clinical Studies for Near Patient, Bedside, or Physician's Office Use	Locations of studies (3 sites)			✔ ☐
		Investigators			✔ ☐
		Precision			✔ ☐
		Method Comparison			✔ ☐
8)	Stability Summary	Calibration Interval			✔ ☐
		Quality Control Materials - Shelf-Life			✔ ☐
		Calibration Matierials - Shelf-Life			✔ ☐
9)	Software	Validation Information	✔ ☐		
		Certification Information	✔ ☐		
10)	Expected Values	Literature References,			✔ ☐
		Population Study,			✔ ☐
		Reference Interval(s),			✔ ☐
		Medical Decision Point(s)			✔ ☐
		Critical Value(s)			✔ ☐

10

DRAFT: 21 CFR § 809.10 Labeling for *In Vitro* Diagnostic Devices - Checklist

21 CFR § 809.10(b) - labeling accompanying each product (package insert) shall bear...in the format and order specified below except where not applicable:

Check each box either, Present (Yes/"Y"), Not Present/Missing (No/"N") or, if Not Applicable (N/A)			Y	N	N/A
(1)	Proprietary & Established Names		✔		
(2)	Intended Use(s)	- state the analyte to be measured			✔
		- state if the test is quantitative or qualitative			✔
		- state the specimen type(s)	✔		
		- state any special instrument requirements			✔
		- state a concise claim of clinical utility			✔
(3)	Summary & Explanation		✔		
(4)	Test Principle		✔		
(5)	Reagents	- quantity, proportion, or concentration			✔
		- biological material (source/measure of activity)			✔
		- precautions, warnings			✔
		- "For *In Vitro* Diagnostic Use"			✔
		- instructions for reconstitution, mixing, or dilution			✔
		- storage instructions (opened/unopened)			✔
(6)	For Instruments: Operation Manual	- name	✔		
		- use/function	✔		
		- installation requirements	✔		
		- principles of operation	✔		
		- performance characteristics/specifications	✔		
		- operating instructions	✔		
		- calibration procedures	✔		
		- precautions/limitations	✔		
		- hazards	✔		
		- service/maintenance requirements	✔		
(7)	Specimen Collection & Preparation	- any special precautions or patient preparation			✔
		- any specimen additives, preservatives			✔
		- any known interferences			✔

		- storage, handling requirements			✔ ☐
(8)	Procedure	- a list of materials provided			✔ ☐
		- a list of materials required but not provided			✔ ☐
		- step by step instructions			✔ ☐
		- a description of the stability of the final reaction			✔ ☐
		- details of calibration			✔ ☐
		- details of quality control			✔ ☐
(9)	Results	- sample calculation or formula			✔ ☐
		- description of the results			✔ ☐
(10)	Limitations	- interferences			✔ ☐
		- additional testing requirements			✔ ☐
(11)	Expected Values	- stated range(s)			✔ ☐
		- literature references, or			✔ ☐
		- population characterization			✔ ☐
(12)	Specific Performance Characteristics	- accuracy (method comparison)			✔ ☐
		- precision			✔ ☐
		- specificity (cross-reactivity, etc.)			✔ ☐
		- sensitivity (lower detection limit)			✔ ☐
		- dilution/recovery/linearity			✔ ☐
		- sample comparability			✔ ☐
		- high dose hook effect			✔ ☐
(13)	Bibliography		✔ ☐		
(14)	Name/place of manufacturer, packer, or distributor		✔ ☐		
(15)	Date of last labeling revision		✔ ☐		

Other: For a multi-purpose instrument used for diagnostic purposes...may bear the information in (b) (1), (2), (6), (14), and (15).

12

K971418/H

Chiron Diagnostics Corporation
63 North Street
Medfield, Massachusetts 02052-1688
508.359.7711 Fax 508.359.3599

CHIRON | DIAGNOSTICS

July 2, 1997

RECEIVED
7 JUL 97 10 54
FDA/CDRH/ODE/DMC

U.S. Food and Drug Administration
Center for Devices and Radiological Health
Office of Device Evaluation
Document Mail Center (HFZ-401)
9200 Corporate Blvd.
Rockville, MD 20850

Re: K971418
Chiron Diagnostics Automated Chemiluminescence System (ACS) Centaur Analyzer

Chiron Diagnostics is responding to the letter from FDA dated June 19, 1997 and subsequent discussions with the subject reviewer, Mr. James Callaghan, regarding the ACS Centaur 510(k) submission. The FDA letter suggested that the premarket notification is withdrawn and the submission be deleted from FDA's system. Discussions with Mr. Callaghan, following receipt of this letter, resolved the specific issue of withdrawal resulting in the notification remaining on active review. Enclosed is a copy of the letter forwarded to Document Control of the decision not to withdraw the subject 510(k) from active review (Section 1).

With regards to the specific request for additional information, the following is provided:

(b)(4)

[redacted]

13 12

(b)(4)

[redacted]

We trust this information satisfies the request of FDA that will allow review of the Premarket Notification to proceed.

Sincerely,

William J. Pignato
Director of Regulatory Affairs
(508) 359-3825

cc: Mr. James Callaghan
Division of Clinical Laboratory Devices

14

CHIRON | DIAGNOSTICS

June 26, 1997

FILE COPY

U.S. Food and Drug Administration
Center for Devices and Radiological Health
Office of Device and Evaluation
Document Mail Center (HFZ-401)
9200 Corporate Blvd.
Rockville, Maryland 20850

FDA/CDRH/ODE/DMC
7 JUN 97 10 5

Subject: 30 Day Letter, Dated June 19, 1997

Reference: **K971418** - Chiron Diagnostics Automated Chemiluminescence System (ACS) Centaur Analyzer

I spoke with Mr. James V. Callaghan within DCLD on June 25, 1997 regarding the subject letter. I informed Mr. Callaghan that Chiron Diagnostics Corporation would provide the requested information within the 30 day timeframe because the data that he requested as the basis to withdraw this 510(k) has been generated and is available. Mr. Callaghan acknowledged this and asked that the information be forwarded to him via the Document Mail Center and that I inform the Document Mail Center of his decision not to withdraw the subject 510(k) from your active review file.

Additionally, I spoke with Ms. Marjorie Shulman on June 26, 1997 and informed her of Mr. Callaghan's decision. It is my understanding that ms. Shulman has changed the status of this 510(k) to active hold.

If you require additional information or have any questions, please call me directly at (508) 359-3877.

Sincerely,

Thomas F. Flynn
Manager, Regulatory Affairs & Compliance

15

CHIRON DIAGNOSTICS COPORATION
ACS:180 SYSTEM AND ASSAYS 510(k) APPROVAL LIST
Current as of 7/2/97

PRODUCT NAME	DC NUMBER	DATE APPROVED
1. ACS CARBAMAZEPINE ASSAY	K964765	02/14/97
2. ACS CEA	P930017	08/23/94
3. ACS CKMB II IMMUNOASSAY	K962126	06/21/96
4. ACS CORTISOL IMMUNOASSAY	K934317/S2	05/13/94
5. ACS CORTISOL IMMUNOASSAY - URINE	K945367	05/05/95
6. ACS CORTISOL IMMUNOASSAY - EXTRACTED URINE	K962559	11/05/96
7. ACS DIGOXIN IMMUNOASSAY	K931213	06/07/93
8. ACS DPD ASSAY	K963251	10/15/96
9. ACS ESTRADIOL IMMUNOASSAY.	K932715	12/03/93
10. ACS ESTRADIOL-6 IMMUNOASSAY	K954697	12/13/95
11. ACS FERRITIN IMMUNOASSAY	K905770	03/12/91
12. ACS FOLATE IMMUNOASSAY	K943297	12/12/94
13. ACS FT3 IMMUNOASSAY	K940482	04/26/94
14. ACS FrT4 IMMUNOASSAY	K961510	06/17/96
15. ACS FSH IMMUNOASSAY	K904649	11/20/90
16. ACS GENTAMICIN IMMUNOASSAY	K955020	08/02/95
17. ACS HCG IMMUNOASSAY	K925277	03/19/93
18. ACS LH2 IMMUNOASSAY	K962041	06/21/96
19. ACS PHENOBARBITOL IMMUNOASSAY	K953021	12/11/95
20. ACC PHENYTOIN IMMUNASSAY	K955873	3/11/96
21. ACS PROGESTERONE IMMUNOASSAY	K932955	08/02/93
22. ACS PROLACTIN IMMUNOASSAY	K904714	11/07/90
23. ACS PSA	P920030	08/23/94
24. ACS PSA2 (SUPPLEMENT)	P020030/S1	12/13/95
25. ACS T-UP IMMUNOASSAY	K970539	03/24/97
26. ACS T3 IMMUNOASSAY	K923646	10/25/91
27. ACS T4 IMMUNOASSAY	K905532	01/15/91
28. ACS TESTOSTERONE IMMUNOASSAY	K934562/S1	12/01/93
29. ACS THEOPHYLLINE IMMUNOASSAY	K951169	06/20/95
30. ACS TOTAL IGE IMMUNOASSAY	K920372	04/08/92
31. ACS TSH 3 IMMUNOASSAY	K951796	06/13/95
32. ACS TSH IMMUNOASSAY	K910981	04/30/91
33. ACS VANCOMYCIN IMMUNOASSAY	K951059	06/19/95
34. ACS VITAMIN B12 IMMUNOASSAY	K910343	03/06/91

Display 2

Method Comparison Summary

(b)(4)

[redacted]

Display 2

Method Comparison Summary

(b)(4)

[redacted]

Display 2

Method Comparison Summary

(b)(4)

[redacted]

[ACSM. MNGFT3] MC2PT *. CTS

Display 2

Method Comparison Summary

(b)(4)

[redacted]

Display 2

Method Comparison Summary

(b)(4)

[redacted]

Display 2

Method Comparison Summary

(b)(4)

[redacted]

(b)(4) Testing

[redacted]

23

(b)(4) Testing

[redacted]

24

(b)(4) Testing

[redacted]

25 ~~24~~

(b)(4) Testing

[redacted]

26

(b)(4) Testing

[redacted]

27

(b)(4) Testing

[redacted]

28

K971418/S1

Chiron Diagnostics Corporation
63 North Street
Medfield, Massachusetts 02052-1688
508.359.7711 Fax 508.359.3599

CHIRON | DIAGNOSTICS

June 26, 1997

U.S. Food and Drug Administration
Center for Devices and Radiological Health
Office of Device and Evaluation
Document Mail Center (HFZ-401)
9200 Corporate Blvd.
Rockville, Maryland 20850

RECEIVED
27 JUN 97 10 45
FDA/CDRH/ODE/DMC

Subject: 30 Day Letter, Dated June 19, 1997

Reference: **K971418** - Chiron Diagnostics Automated Chemiluminescence System (ACS) Centaur Analyzer

I spoke with Mr. James V. Callaghan within DCLD on June 25, 1997 regarding the subject letter. I informed Mr. Callaghan that Chiron Diagnostics Corporation would provide the requested information within the 30 day timeframe because the data that he requested as the basis to withdraw this 510(k) has been generated and is available. Mr. Callaghan acknowledged this and asked that the information be forwarded to him via the Document Mail Center and that I inform the Document Mail Center of his decision not to withdraw the subject 510(k) from your active review file.

Additionally, I spoke with Ms. Marjorie Shulman on June 26, 1997 and informed her of Mr. Callaghan's decision. It is my understanding that ms. Shulman has changed the status of this 510(k) to active hold.

If you require additional information or have any questions, please call me directly at (508) 359-3877.

Sincerely,

Thomas F. Flynn
Manager, Regulatory Affairs & Compliance

29

SK-14

DEPARTMENT OF HEALTH AND HUMAN SERVICES

Public Health Service

Food and Drug Administration
Center for Devices and
Radiological Health
Office of Device Evaluation
Document Mail Center (HFZ-401)
9200 Corporate Blvd.
Rockville, Maryland 20850

July 01, 1997

CHIRON DIAGNOSTICS CORP.
63 NORTH ST.
MEDFIELD, MA 02052
ATTN: WILLIAM J. PIGNATO

510(k) Number: K971418
Product: CHIRON DIAGNOSTICS AUTOMATED CHEMILUMINESCENC

The additional information you have submitted has been received.

We will notify you when the processing of this submission has been completed or if any additional information is required. Please remember that all correspondence concerning your submission MUST be sent to the Document Mail Center (HFZ-401) at the above letterhead address. Correspondence sent to any address other than the one above will not be considered as part of your official premarket notification submission. Because of equipment and personnel limitations we cannot accept telefaxed material as part of your official premarket notification submission, unless specifically requested of you by an FDA official.

The Safe Medical Devices Act of 1990, signed on November 28, states that you may not place this device into commercial distribution until you receive a letter from FDA allowing you to do so. As in the past, we intend to complete our review as quickly as possible. Generally we do so 90 days. However, the complexity of a submission or a requirement for additional information may occasionally cause the review to extend beyond 90 days. Thus, if you have not received a written decision or been contacted within 90 days of our receipt date you may want to check with FDA to determine the status of your submission.

If you have procedural or policy questions, please contact the Division of Small Manufacturers Assistance at (301) 443-6597 or at their toll-free number (800) 638-2041, or contact me at (301) 594-1190.

Sincerely yours,

Marjorie Shulman
Supervisory Consumer Safety Officer
Premarket Notification Section
Office of Device Evaluation
Center for Devices and
Radiological Health

30

DEPARTMENT OF HEALTH AND HUMAN SERVICES

Public Health Service

Food and Drug Administration
Center for Devices and
Radiological Health
Office of Device Evaluation
Document Mail Center (HFZ-401)
9200 Corporate Blvd.
Rockville, Maryland 20850

June 26, 1997

CHIRON DIAGNOSTICS CORP.
63 NORTH ST.
MEDFIELD, MA 02052
ATTN: WILLIAM J. PIGNATO

510(k) Number: K971418
Product: CHIRON DIAGNOSTICS AUTOMATED CHEMILUMINESCENC

We are holding your above-referenced Premarket Notification (510(k)) for 30 days pending receipt of the additional information that was requested by the Office of Device Evaluation. Please remember that all correspondence concerning your submission MUST cite your 510(k) number and be sent in duplicate to the Document Mail Center (HFZ-401) at the above letterhead address. Correspondence sent to any address other than the one above will not be considered as part of your official premarket notification submission. Because of equipment and personnel limitations, we cannot accept telefax material as part of your official premarket notification submission unless specifically requested of you by an FDA official.

If after 30 days the requested information, or a request for an extension of time, is not received, we will discontinue review of your submission and proceed to delete your file from our review system. Pursuant to 21 CFR 20.29, a copy of your 510(k) submission will remain in the Office of Device Evaluation. If you then wish to resubmit this 510(k) notification, a new number will be assigned and your submission will be considered a new premarket notification submission.

Please remember that the Safe Medical Devices Act of 1990 states that you may not place this device into commercial distribution until you receive a decision letter from FDA allowing you to do so.

If you have procedural or policy questions, please contact the Division of Small Manufacturers Assistance at (301) 443-6597 or at their toll-free number (800) 638-2041, or contact me at (301) 594-1190.

Sincerely yours,

Marjorie Shulman
Supervisor Consumer Safety Officer
Premarket Notification Section
Office of Device Evaluation
Center for Devices and
Radiological Health

31 31

DEPARTMENT OF HEALTH & HUMAN SERVICES

Public Health Service

Food and Drug Administration
2098 Gaither Road
Rockville MD 20850

JUN 19 1997

William J. Pignato
Director of Regulatory Affairs
Chiron Diagnostics Corporation
63 North Street
Medfield, Massachusetts 02052

Re: K971418
Chiron Diagnostics Automated Chemiluminescence System (ACS) Centaur Analyzer
Dated: April 14, 1997
Received: April 16, 1997

Dear Mr. Pignato:

We have reviewed your Section 510(k) notification of intent to market the device referenced above and have determined that your submission has major deficiencies. We, therefore, cannot determine if the device is substantially equivalent to a device marketed before May 28, 1976, the enactment date of the Medical Device Amendments, based solely on the information you provided. Because of the significance of the deficiencies identified below, we believe that you cannot adequately respond in 30 days as required by 21 CFR 807.87(h). Therefore, we now consider your premarket notification to be withdrawn and your submission deleted from our system. If you submit the information requested below it will be considered and processed as a new 510(k). All information previously submitted must be resubmitted so that your new 510(k) is complete. So that your new submission is complete, we require the following additional information:

(b)(4)

[redacted]

X 32

(b)(4)

[redacted]

You may not market this device until you have received a letter from FDA allowing you to do so. If you market the device without conforming to this requirement you will be in violation of the Federal Food, Drug, and Cosmetic Act.

If you have questions concerning the contents of this letter, please contact James V. Callaghan at (301) 594-1243. If you need information or assistance concerning the Investigational

33

Device Exemption regulations, please contact the Division of Small Manufacturers Assistance at its toll free number (800) 638-2041 or (301) 443-6597.

Sincerely yours,

Alfred Montgomery, D.V.M.
Acting Branch Chief
Clinical Chemistry, Toxicology,
and Hematology Branch
Division of Clinical
Laboratory Devices
Office of Device Evaluation
Center for Devices and
Radiological Health

3 34

DEPARTMENT OF HEALTH & HUMAN SERVICES

Public Health Service
Food And Drug Administration

Memorandum

Date June 12, 1997

From: Reviewer(s) - Name(s) **JAMES V. CALLAGHAN**

Subject: 510(k) Number **K971418**

To: The Record - It is my recommendation that the subject 510(k) Notification:

- ☐ Refuse to accept.
- ☒ Requires additional information (other than refuse to accept).
- ☒ Accepted for review April 22, 1997
- ☐ Is substantially equivalent to marketed devices.
- ☐ NOT substantially equivalent to marketed devices.
- ☐ Other (e.g., exempt by regulation, not a device, duplicate, etc.)

Is this device subject to Postmarket Surveillance?	☐ YES	☒ NO
Is this device subject to the Tracking Regulation?	☐ YES	☒ NO
Was clinical data necessary to support the review of this 510(k)?	☐ YES	☒ NO
Is this a prescription device?	☐ YES	☒ NO
Was this 510(k) reviewed by a Third Party?	☐ YES	☒ NO

This 510(k) contains:

Truthful and Accurate Statement ☐ Requested ☒ Enclosed
(required for originals received 3-14-95 and after)

☒ A 510(k) summary OR ☐ A 510(k) statement

☐ The required certification and summary for class III devices

☒ The indication for use form (required for originals received 1-1-96 and after)

The submitter requests under 21 CFR 807.95 (doesn't apply for SEs):

☐ No Confidentiality ☒ Confidentiality for 90 days ☐ Continued Confidentiality exceeding 90 days

Predicate Product Code with panel and class: Additional Product Code(s) with panel (optional)

REVIEW: [signature] CLCB 6-12-97
(Branch Chief) (Branch Code) (Date)

FINAL REVIEW: _____
(Division Director) (Date)

Revised: 11-20-96

4 35

DEPARTMENT OF HEALTH & HUMAN SERVICES

Public Health Service
Food And Drug Administration
Memorandum

DATE: June 12, 1997 **K971418**

FROM: James V. Callaghan **CLCB**

TO: The Record

SUBJECT: Chiron Diagnostics Automated Chemiluminescence System (ACS) Centaur Analyzer; 510k submission

OVERVIEW

Chiron Diagnostics is claiming the Chiron Diagnostics Automated Chemiluminescence System (ACS) Centaur Analyzer is substantially equivalent (SE) to the ACS: 180 K902336 (JJE). Based on this claim and the description provided by Chiron Diagnostics, of the Chiron ACS Centaur Analyzer, comparison and requirements will be to other legally marketed Automated Immunoassay Analyzer; falling under the product code JJE.

The Chiron ACS Centaur Analyzer is intended to perform immunochemical assays analysis on clinical specimens using the ACS immunoassays.

The Chiron ACS Centaur is an Automated Immunoassay Analyzer, which is intended to process ACS assays that are currently cleared for use on the ACS:180 utilizing acridinium ester as label and paramagnetic particles as the solid phase. Like the ACS:180, the ACS Centaur measures the amount of light emitted during the chemiluminescence reaction. There is direct relationship between the amount of light emitted and amount of antigen in the patient sample. The system will measure both competitive binding assays and sandwich assays.

The ACS Centaur uses a Master curve and a two-point, user initiated calibration to calibrate quantitative ACS assays. The Master Curve and the two-point calibration system eliminate the need to measure a full standard curve with each assay or to run calibrators each time the assay is run. The system stores the calibration for the interval specified in the assay product inserts.

Based on Chiron Diagnostics' description and intended use, the Chiron ACS Centaur is classified and regulated by the following:

CH JJE ANALYZER, CHEMISTRY (PHOTOMETRIC, DISCRETE), FOR CLINICAL USE----------862.2160

21 CFR § 862.2160 Discrete Photometric Chemistry Analyzer for Clinical Use.

(a) Identification. A discrete photometric chemistry analyzer for clinical use is a device intended to duplicate manual analytical procedures by performing automatically various steps such as pipetting, preparing filtrates, heating, and measuring color intensity. This device is intended for use in conjunction with certain materials to measure a variety of analytes. Different models of the device incorporate various instrumentation such as micro analysis apparatus, double beam, single, or dual channel photometers, and bichromatic 2-wavelength photometers. Some models of the device may include reagent-containing components that may also serve as reaction units.

(b) Classification. Class 1.

5 36

My review of Chiron Diagnostics' 510(k) submission is based on the following.:

PERFORMANCE DATA

Performance data for the Chiron ACS Centaur are not included in this submission.

(b)(4)

[redacted]

(b)(4)

[redacted]

James V. Callaghan, MT(ASCP)
Scientific Reviewer
FDA/CDRH/DCLD/CLCB

38

REVISED:01/22/96

PREMARKET NOTIFICATION (510(K)) CHECKLIST FOR ACCEPTANCE DECISION

K K971418 Device Name ACS Centaur Analyzer

Division/Branch DCD/CDRH

Administrative Reviewer Signature [illegible] Date 4/22/97

Supervisory Signature _____ Date _____

Did the firm request expedited review? ____ Yes ✓ No

Did we grant expedited review? ____ Yes ✓ No

Truthful and accurate statement enclosed? ✓ Yes ____ No
(If Not Enclosed, Must Be A Refuse To Accept Letter)
Required For Originals Received 3/14/95 And After

Is the Indication for Use Form enclosed? ✓ YES ____ No
(Required for Original 510(k)s received 1/1/96 and after -- must be submitted on a separate sheet of paper)

Without reviewing this 510(k), do you believe this device type may be a preamendments class III device? ____ Yes ____ No (IF YES, NOTIFY POS IMMEDIATELY IF THE OUTSIDE OF THE 510(k) HAS NOT BEEN STAMPED CLASS III SO THAT THE GMP INSPECTION CAN BE SCHEDULED AS SOON AS POSSIBLE). Class III devices can not receive a determination of substantial equivalence until the GMP inspection process has been completed.

Is this a file that was determined to be substantially equivalent by ODE, but placed on hold due to GMP violations and deleted after 12 months on hold? If so, a new ODE review is not required, please forward to POS.

____ Yes ✓ No

✓ Accepted ____ Refuse To Accept

39

29

I. CRITICAL ELEMENTS:	YES PRESENT OMISSION JUSTIFIED	NO INADEQUATE OMITTED
A. Is The Product A Device?	☑	☐
B. Is The Device Exempt From 510(k) By Regulation Or Policy?	☐	☑
C. Is Device Subject To Review By CDRH?	☑	☐
D. (i) Are You Aware That This Device Has Been The Subject Of A Previous NSE Decision?	☐	☑
(ii) If Yes, Does This New 510(k) Address The NSE Issue(s) (E.G., Performance Data)?	☐	☐
E. (i) Are You Aware Of The Submitter Being The Subject Of An Integrity Investigation? If Yes, Consult The ODE Integrity Officer.	☐	☑
(ii) Has The ODE Integrity Officer Given Permission To Proceed With The Review? (Blue Book Memo #I91-2 And Federal Register 90N-0332, September 10, 1991.)	☐	☐
F. Does The Submission Contain The Information Required Under Sections 510(k), 513(f), And 513(i) Of The Federal Food, Drug, and Cosmetic Act (Act) And Subpart E Of Part 807 In Title 21 Of The Code Of Federal Regulations?:	☐	☐
1. Device Trade Or Proprietary Name	☑	☐
2. Device Common Or Usual Name Or Classification Name	☑	☐
3. Establishment Registration Number (Only Applies If Establishment Is Registered)	☑	☐
4. Class Into Which The Device Is Classified Under (21 CFR Parts 862 to 892)	☑	☐
5. Classification Panel	☑	☐
6. Action Taken To Comply With Section 514 Of The Act	☐	☐
7. Proposed Labels, Labeling And Advertisements (If Available) That Describe The Device, Its Intended Use, And Directions For Use (Blue Book Memo #G91-1)	☑	☐

10

8. A 510(k) Summary Of Safety And Effectiveness Or A 510(k) Statement That Safety And Effectiveness Information Will Be Made Available To Any Person Upon Request	☑	☐
9. For Class III Devices Only, A Class III Certification And A Class III Summary	☐ N/A	☐
10. Photographs Of The Device	☑	☐
11. Engineering Drawings For The Device With Dimensions And Tolerances	☑	☐
12. The Marketed Device(s) To Which Equivalence Is Claimed Including Labeling And Description Of The Device	☑	☐
13. Statement Of Similarities And/Or Differences With Marketed Device(s)	☑	☐
14. Data To Show Consequences And Effects Of A Modified Device(s)	☑	☐
15. Truthful And Accurate Statement	☑	☐
II. Additional Information That <u>Is</u> Necessary Under 21 CFR 807.87(h):	☐	☐
A. Submitter's Name And Address	☑	☐
B. Contact Person, Telephone Number And Fax Number	☑	☐
C. Representative/Consultant If Applicable	☐ N/A	☐
D. Table Of Contents With Pagination	☑	☐
E. Address Of Manufacturing Facility/Facilities And, If Appropriate, Sterilization Site(s)	☑	☐
III. Additional Information That <u>May Be</u> Necessary Under 21 CFR 807.87(h):	☐	☐
A. Comparison Table Of The New Device To The Marketed Device(s)	☑	☐
B. Action Taken To Comply With Voluntary Standards	☐	☐
C. Performance Data	☐	☐
MARKETED DEVICE:	☐	☐
Bench Testing	☐	☐
Animal Testing	☐	☐
Clinical Data	☐	☐
NEW DEVICE:	☐	☐
Bench Testing	☐	☐
Animal Testing	☐	☐

10 of 11

Clinical Data	☐	☐
D. Sterilization Information	☐ n/a	☐
E. Software Information	☐	☐
F. Hardware Information	☐ n/a	☐
G. If This 510(k) Is For A Kit, Has The Kit Certification Statement Been Provided?	☐	☐
H. Is This Device Subject To Issues That Have Been Addressed In Specific Guidance Document(s)?	☐	☐
If Yes, Continue Review With Checklist From Any Appropriate Guidance Documents.	☐	☐
If No, Is 510(k) Sufficiently Complete To Allow Substantive Review?	☐	☐
I. Other (Specify)	☐	☐

REVISED:3/14/95

THE 510(K) DOCUMENTATION FORMS ARE AVAILABLE ON THE LAN UNDER 510(K) BOILERPLATES TITLED "DOCUMENTATION" AND MUST BE FILLED OUT WITH EVERY FINAL DECISION (SE, NSE, NOT A DEVICE, ETC.).

"SUBSTANTIAL EQUIVALENCE" (SE) DECISION MAKING DOCUMENTATION

K_____

Reviewer: _____

Division/Branch: _____

Device Name: _____

Product To Which Compared (510(K) Number If Known): _____

	YES	NO	
1. Is Product A Device			If NO = Stop
2. Is Device Subject To 510(k)?			If NO = Stop
3. Same Indication Statement?			If YES = Go To 5
4. Do Differences Alter The Effect Or Raise New Issues of Safety Or Effectiveness?			If YES = Stop NE
5. Same Technological Characteristics?			If YES = Go To 7
6. Could The New Characteristics Affect Safety Or Effectiveness?			If YES = Go To 8
7. Descriptive Characteristics Precise Enough?			If NO = Go To 10 If YES = Stop SE
8. New Types Of Safety Or Effectiveness Questions?			If YES = Stop NE
9. Accepted Scientific Methods Exist?			If NO = Stop NE
10. Performance Data Available?			If NO = Request Data
11. Data Demonstrate Equivalence?			Final Decision:

Note: In addition to completing the form on the LAN, "yes" responses to questions 4, 6, 8, and 11, and every "no" response requires an explanation.

43

1 ✓

DEPARTMENT OF HEALTH AND HUMAN SERVICES Public Health Service

Food and Drug Administration
Center for Devices and
Radiological Health
Office of Device Evaluation
Document Mail Center (HFZ-401)
9200 Corporate Blvd.
Rockville, Maryland 20850

April 18, 1997

CHIRON DIAGNOSTICS CORP.
63 NORTH ST.
MEDFIELD, MA 02052
ATTN: WILLIAM J. PIGNATO

510(k) Number: K971418
Received: 16-APR-97
Product: CHIRON DIAGNOSTICS AUTOMATED CHEMILUMINESCENCE SYSTEM (ASC) CENTAUR

The Center for Devices and Radiological Health (CDRH), Office of Device Evaluation (ODE), has received the Premarket Notification you submitted in accordance with Section 510(k) of the Federal Food, Drug, and Cosmetic Act (Act) for the above referenced product. We have assigned your submission a unique 510(k) number that is cited above. Please refer prominently to this 510(k) number in any future correspondence that relates to this submission. We will notify you when the processing of your premarket notification has been completed or if any additional information is required. YOU MAY NOT PLACE THIS DEVICE INTO COMMERCIAL DISTRIBUTION UNTIL YOU RECEIVE A LETTER FROM FDA ALLOWING YOU TO DO SO.

On January 1, 1996, FDA began requiring that all 510(k) submitters provide on a separate page and clearly marked "Indication For Use" the indication for use of their device. If you have not included this information on a separate page in your submission, please complete the attached and amend your 510(k) as soon as possible. Also if you have not included your 510(k) Summary or 510(k) Statement, or your Truthful and Accurate Statement, please do so as soon as possible. There may be other regulations or requirements affecting your device such as Postmarket Surveillance (Section 522 (a) (1) of the Act) and the Device Tracking regulation (21 CFR Part 821). Please contact the Division of Small Manufacturers Assistance at the number below for more information.

With regard to the Clinical Laboratory Improvement Amendments of 1988 (CLIA-88) which became effective September 1, 1992, the Center for Disease Control (CDC) and Prevention is currently handling complexity category/assignments concurrent with FDA's 510(k) review. To determine if your device requires a CLIA complexity categorization, contact CDC at (770)488-7655.

Please remember that all correspondence concerning your submission MUST be sent to the Document Mail Center (HFZ-401) at the above letterhead address. Correspondence sent to any address other than the Document Mail Center will not be considered as part of your official premarket notification submission. Because of equipment and personnel limitations, we cannot accept telefaxed material as part of your official premarket notification submission, unless specifically requested of you by an FDA official. Any telefaxed material must be followed by a hard copy to the Document Mail Center (HFZ-401).

44

13

You should be familiar with the manual entitled, "Premarket Notification 510(k) Regulatory Requirements for Medical Devices" available from DSMA. If you have other procedural or policy questions, or want information on how to check on the status of your submission (after 90 days from the receipt date), please contact DSMA at (301) 443-6597 or its toll-free number (800) 638-2041, or at their Internet address http://www.fda.gov/cdrh/dsmamain.html or me at (301) 594-1190.

Sincerely yours,

Marjorie Shulman
Consumer Safety Officer
Premarket Notification Staff

97 1448

Chiron Diagnostics Corporation
63 North Street
Medfield, Massachusetts 02052-1688
508.359.7711 Fax 508.359.3599

CHIRON | DIAGNOSTICS

April 14, 1997

RECEIVED
16 APR 97 13 12
TEA/CDRH/CDE/DMC

U.S. Food and Drug Administration
Center for Devices and Radiological Health
Office of Device and Evaluation
Document Mail Center (HFZ-401)
9200 Corporate Blvd.
Rockville, MD 20850

Re: Premarket Notification - 510(k)
Automated Chemiluminesence System (ACS) Centaur Analyzer

Pursuant to Section 510(k) of the Food, Drug, and Cosmetic Act and in accordance with 21 CFR 807.87, enclosed in duplicate is the Premarket Notification for the Chiron Diagnostics Automated Chemiluminescence System (ACS) Centaur Analyzer

The intended use of ACS:Centaur Analyzer is a stand-alone continuous operation immunochemistry analyzer intended to be used with a variety of dedicated immunodiagnostic assays currently approved for use on the ACS: 180® Analyzer.

The device is a subsequent generation of and substantially equivalent to the Chiron Diagnostics ACS: 180® Analyzer D.C.(#K902336).

In accordance with 21 CFR 807.87(j), Chiron Diagnostics Corporation makes the following Premarket Notification Truthful and Accurate Statement:

> I certify that, in my capacity as Director of Regulatory Affairs for Chiron Diagnostics Corporation, I believe to the best of my knowledge, that all data and information submitted in the Premarket Notification are truthful and accurate and that no applicable material fact has been omitted.

In accordance with 21 CFR 807.95(b)(i), Chiron Diagnostics Corporation requests that the Food and Drug Administration hold as confidential information the company's intent to market this device until commercial distribution has begun.

Sincerely,

William J. Pignato
Director of Regulatory Affairs
(508) 359-3825
(508) 359-3885

Enclosure

c/g: 510k/cent510.doc

TX 46
I

Premarket Notification - 510(k)

Chiron Diagnostics ACS:Centaur Analyzer

In accordance with 21 CFR 807.87(a-h), the following information is provided:

a) **Device Name**: Chiron Diagnostics Automated Chemiluminescence System (ACS) Centaur Analyzer

b) **Establishment Registration Number**: 1519113.

c) **Classification**:

This device is a Class I device and classified under 21 CFR 862.2160

d) **Performance Standard**: None established under Section 514.

e) **Labeling**: Included with this notification are the following:

ACS:Centaur Reference Manual (Section 1-9 and Appendices A-I)
On-Board System Reagent Labeling (Section 14)

f) **Substantial Equivalence**:

This product is substantially equivalent to the currently marketed Chiron Diagnostics ACS:180 analyzer. The assays currently approved for use with the ACS:180® will also be used on the ACS:Centaur. A comparison of features of the ACS:180® vs. the ACS:Centaur are presented in Section 12

g) **Significant Change or Modification**: Not applicable

h) **Additional Information**:

N/A

47

ACS:CENTAUR PREMARKET NOTIFICATION

TABLE OF CONTENTS

Section	Information	
I	**ACS:CENTAUR REFERENCE MANUAL**	
	Using the Manual	
Section I	System Priniples	
Section 2	System Overview	
Section 3	Workstation	
Section 4	Operating the System	
Section 5	Calibration	
Section 6	Quality Control	
Section 7	Maintenance	
Section 8	Troubleshooting	
Section 9	Setup	
Section 10	**Appendices**	
	Section A	Protection Yourself from Biohazards
	Section B	Service and Supplies
	Section C	Preinstallation and Site Requirements
	Section D	Installing and Relocating
	Section E	Reagent and Water Quality
	Section F	Specifications
	Section G	System Symbols
	Section H	References
	Section I	Glossary

48

Additional Information

Section 11	Summary of Safety and Effectiveness
Section 12	Comparison of ACS:Centaur vs. ACS:180®
Section 13	ACS: Centaur Software Development Process
Section 14	Labeling for System Fluids
Section 15	Indication for Use Statement

49

ACS:Centaur™

Reference Manual

Automated Chemiluminescence System

CHIRON | DIAGNOSTICS

Copyright 1997. Chiron Diagnostics Corporation. All rights reserved.

Printed on recycled paper

Preliminary 4/1/97 For Investigational Use Only

All Rights Reserved

This manual is copyrighted, and all rights are reserved. No part of this manual or the products it describes may be reproduced by any means or in any form without prior consent in writing from Chiron Diagnostics Corporation.

ACS:Centaur is a trademark of Chiron Diagnostics Corporation, East Walpole, MA.

Magic is a registered trademark of Chiron Diagnostics Corporation, East Walpole, MA.

GlidePoint is a registered trademark of Cirque Corporation, Salt Lake City, Utah.

Patents Pending.

Printed in U.S.A.

The information in this manual was correct at the time of printing. However, Chiron Diagnostics Corporation continues to improve products and reserves the right to change specifications, equipment, and maintenance procedures at any time without notice.

51

Contents

Using This Manual vii

Conventions ix

Special Terminology x

1 System Principles 1-1

Intended Use 1-3

Features 1-4

Technology 1-5

Direct Chemiluminescence 1-5

Antibody Binding Principles 1-6

Paramagnetic Particles and Magnetic Separation 1-7

Assay Reaction Formats 1-8

Sandwich Format 1-8

Competitive Format 1-10

Antibody Capture Format 1-13

Assay Protocols 1-16

Questions and Answers 1-17

2 System Overview 2-1

Introduction 2-3

Sample Loading Area 2-5

Reagent Loading 2-8

Primary Packs 2-8

Primary Reagent Compartment 2-9

Ancillary Packs 2-10

Ancillary Reagent Queue 2-10

Supplies and Wastes 2-11

Test Sequence 2-12
- Cuvette Loading 2-13
- Incubation Ring 2-14
- Sample Probe 2-15
- Ancillary Probe 2-16
- Reagent Probes 2-17
- Aspirate Probes, Wash Stations, and Acid Probe 2-18
- Elevator, Luminometer, and Base Probe 2-19

Questions and Answers 2-20

3 Workstation 3-1

Workstation Components 3-3

Workspace 3-6
- Status Buttons 3-7
- Task Buttons 3-8
- Function Buttons 3-8

Window Components 3-9
- Window Structure 3-9
- Window Elements 3-9
- Interacting with the Windows 3-11

Online Information 3-12
- Windows 3-12
- Fields and Buttons 3-12
- Maintenance Activities 3-12
- Event Codes 3-12

4 Operating the System 4-1

Introduction 4-3
- Manually Entering Requests at a Stand-alone System 4-3

Manually Receiving Requests from the LIS 4-4
LIS Integrated with Dynamic Download 4-5
LIS Integrated with Host Query 4-7

Loading Sample Racks 4-9
Loading Stat Samples 4-10

Replenishing Reagents 4-12
Reviewing Reagent Inventory 4-12
Reviewing Reagent Status 4-12
Reviewing Primary Reagent Status 4-13
Adding Primary Reagent Packs 4-14
Reviewing Ancillary Reagent Status 4-14
Adding Ancillary Reagent Packs 4-15

Replenishing Supplies 4-16
Reviewing Supplies Status 4-16
Preparing the Water and Waste Bottles 4-17
Adding Cuvettes 4-19
Adding Sample Tips 4-20
Emptying the Waste Bins 4-21
Replacing the System Fluids 4-24

Reviewing Inprocess Samples 4-26

Modifying the Worklist 4-28
Reviewing the Worklist Summary 4-28
Querying an LIS 4-29
Adding Patient Requests 4-29
Entering Patient Demographics 4-30
Adding Stat Requests 4-31
Adding Batch Requests 4-31
Adding Calibrator Requests 4-32
Adding Control Requests 4-33
Entering Dilution Options 4-34
Entering Reagent Options 4-35
Editing Requests 4-36

Editing Batch Requests 4-36
Deleting Requests 4-37

Evaluating the Results 4-38
Reviewing Results 4-38
Repeating a Test 4-39
Editing Results 4-39
Sending Results to an LIS 4-40
Printing Sample Results 4-40
Deleting Selected Sample Results 4-41
Deleting Worklist Results 4-42

Maintaining Data Files 4-43
Archiving Results 4-43
Restoring Archived Results 4-44

5 Calibration **5-1**

Quantitative Assays 5-3
Principle 5-3
Establishing a Master Curve 5-3
Two-Point Calibration 5-5
Calibration Evaluation Ranges 5-6
Reference Serum Calibration for T Uptake 5-8

Qualitative Assays 5-9
Principle 5-9
Calculating a Cutoff Point 5-9
Establishing a Master Curve 5-10
Calculating the Result 5-11

Defining Calibration 5-12
Defining a Master Curve 5-12
Defining Calibrator Assigned Values 5-13

Performing Calibrations 5-15
Verifying Calibration Status and Due Dates 5-15

Scheduling Calibrators 5-16
Reviewing Calibration Data 5-17
Reviewing Historical Calibration Data 5-18
Excluding a Calibration Result 5-19
Waiving an Expired Calibration 5-20
Accepting an Invalid Calibration 5-20
Printing Calibration Data 5-20

6 Quality Control 6-1

Principles 6-3
Definitions 6-3
Interpretation of Control Data 6-4
QC Principles for Quantitative Assays 6-5
QC Principles for Qualitative Assays 6-6

Defining QC 6-7
Adding a Control 6-7
Editing a QC Definition 6-8
Deleting a Control or a Test 6-8
Printing a QC Definition 6-9

Performing QC 6-10
Scheduling Controls 6-10
Autoscheduling Controls 6-11
Reviewing QC Data 6-11
Editing QC Data Points and Statistics 6-14
Printing QC Reports 6-15

7 Maintenance 7-1

Accessing Maintenance Information 7-3
Using the Maintenance Schedule 7-3
Using the Maintenance Log 7-3
Accessing Online Maintenance Procedures 7-4
Printing the Maintenance Schedule 7-4

Daily Maintenance 7-5
Daily Cleaning Procedure 7-5
Replacing the Water Bottle 7-5

Weekly Maintenance 7-6
Cleaning the Water Bottle and Water Reservoir 7-6
Cleaning the Sample Tip Waste Area 7-9

Monthly Maintenance 7-13
Performing the Monthly Cleaning Procedure 7-13
Cleaning the Reagent Probes 7-15
Cleaning the Ancillary Probe 7-17
Cleaning the Aspirate Probes 7-18
Cleaning the Cuvette Waste Area 7-19
Cleaning the Air Filter 7-24

As-Needed Maintenance 7-27
Replacing the Cleaning Solution 7-27
Cleaning the Probe Rinse Stations 7-28
Cleaning the Reagent Probe Shutter 7-29
Cleaning the Primary Reagent Compartment and Reagent Slides 7-30
Cleaning the Covers and Pointing Device 7-31
Cleaning the Sample Racks 7-31

8 Troubleshooting 8-1

Investigating System Problems 8-3

Solving Event Codes 8-4

9 Setup 9-1

Defining Test Options 9-3
Modifying Test Definitions 9-3
Modifying Reference Ranges 9-4
Defining Test Profiles 9-5
Defining Ratio Tests for Calculated Parameters 9-6

57

Defining Off-System Tests 9-7

Selecting Sample Handling Options 9-8
Selecting Sample Identification 9-8
Selecting Sample Aspirations 9-8
Selecting Sample Tube Types 9-8
Defining Repeats 9-9

Adjusting the Time 9-10

Defining Printing Options 9-11
Selecting a Printer 9-11
Selecting Paper Size 9-11
Entering a Report Header 9-12

Defining System Passwords 9-13

Defining Sample Barcode Options 9-14
Selecting the Barcode Symbology and Format 9-14
Defining Custom Barcode Labels 9-14

Defining LIS Communication Options 9-16

Appendix A: Protecting Yourself from Biohazards A-1

Appendix B: Services and Supplies B-1
Addresses and Communication Numbers B-1
Standard Instrument Warranty and Service Delivery Policy B-3
Supplies and Accessories B-6

Appendix C: Preinstallation Site Requirements C-1
Instrument C-1
Water Supply C-1
Drainage System C-2
Delivery C-2
Communications C-2
Environment C-2

58

Appendix D: Installing and Relocating D-1

Appendix E: Reagents and Water Quality E-1
System Reagents E-1
Reagent Water Quality E-1

Appendix F: Specifications F-1
Dimensions F-1
Microprocessor (CPU) Specifications F-1
Printer Specifications F-2
Environmental Specifications F-2
Outputs F-2
Luminometer Specifications F-2
Electrical Ratings and Power Requirements F-3
Primary Sample Tube Specifications F-3
Sample Transfer Cups and Tubes Specifications F-4
Microsample Containers Specifications F-4

Appendix G: System Symbols G-1

Appendix H: References H-1

Using This Manual

The *ACS:Centaur Reference Manual* provides clinical laboratory professionals with information about operating the ACS:Centaur system:

- ACS:Centaur system operators, who perform daily operating tasks such as preparing the system to run samples, scheduling and running samples, reviewing results, performing maintenance, and correcting system problems
- ACS:Centaur system key operators, who perform daily and other operating tasks such as reviewing control data, managing data files, and modifying system parameters

If you want to . . .	*Then refer to . . .*
learn about features such as continuous operation, dilutions, or reagent inventory	Section 1, *System Principles.*
review principles of chemiluminescence and assay reaction	
review the hardware and the operating sequence	Section 2, *System Overview.*
learn about the user interface components and windows	Section 3, *Workstation.*
prepare the system	Section 4, *Operating the System.*
schedule the worklist	
analyze the samples	
manage sample results and data files	
review Master Curve and two-point calibration principles	Section 5, *Calibration.*
define calibration information	
define multiple Master Curves	
view quality control statistics	Section 6, *Quality Control.*
view Levey-Jennings charts	
view monthly summaries	
perform scheduled maintenance activities	Section 7, *Maintenance.*
record maintenance activities	

60

If you want to . . .	*Then refer to . . .*
investigate and correct system problems	Section 8, *Troubleshooting*.
modify test definition parameters	Section 9, *Setup*.
modify system parameters	
review additional information such as the glossary, supplies list, or the index	Appendixes.

61

30 ~~61~~

Conventions

Several conventions are used throughout the *ACS:Centaur Reference Manual*. The following table explains the meaning of the conventions.

This convention . . .	*Indicates . . .*
BIOHAZARD:	a potentially biohazardous condition.
WARNING	a condition that may cause personal injury.
CAUTION:	a condition that may cause product damage or loss of data. On the system, this symbol indicates that you should refer to the manuals for more information.
NOTE:	information that requires your attention.
Bold	an element on the user interface. When the word "save" appears as **Save**, it refers to the **Save** button on the window.
Procedure	procedural information for maintenance tasks and for event codes accessible on the system.
?	information accessible on the system by using the **?** key on the keyboard or the **?** button in the pointing device. Online information can include information about specific entry fields, buttons, and tables or information about how to use a window.

62

31

Special Terminology

Some special terminology is used throughout the *ACS:Centaur Reference Manual.* The following table explains the meaning of the terms and the specific actions that you need to take when you see the term.

Term	Definition
Select	When a procedure instructs you to select, move the pointer to the appropriate item and then press the GlidePoint button.
Deselect	When a procedure instructs you to deselect, move the pointer to the appropriate item and then press the GlidePoint button.
Enter	When a procedure instructs you to enter information, type the specified information using the keyboard and then press Enter to store the information.
Scan	When a procedure instructs you to scan a barcode, pass the barcode scanner over the specified barcode to enter the required information.
Highlighted	When a procedure describes a highlighted item, it refers to the appearance of that item on the workspace. When you move the pointer to a line in a table or a field at a window and press the GlidePoint button, the background of the line or field changes colors. This is referred to as highlighting.
Focus	You get focus any time you select an item. When an item has focus, it has a black frame around it.

63

1 System Principles

Intended Use 1-3

Features 1-4

Technology 1-5
Direct Chemiluminescence 1-5
Antibody Binding Principles 1-6
Paramagnetic Particles and Magnetic Separation 1-7

Assay Reaction Formats 1-8
Sandwich Format 1-8
Competitive Format 1-10
AE-Labeled Antigen 1-10
AE-Labeled Antibody 1-12
Antibody Capture Format 1-13

Assay Protocols 1-16

Intended Use

The ACS:Centaur system is a stand-alone, continuous operation, immunochemistry analyzer. The ACS:Centaur system performs immunochemical assays on clinical specimens. The system menu includes endocrine, anemia, reproductive, cancer, cardiac, therapeutic drug, and infectious disease assays. All assays use direct chemiluminescent technology.

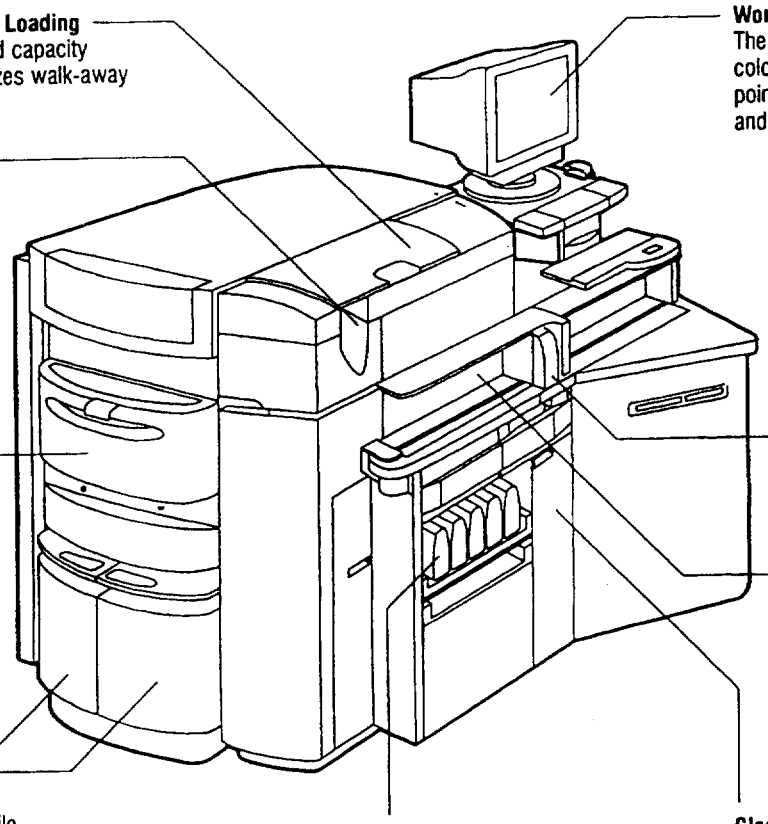

65

3r

Features

Feature	Description
Continuous Operation and Access	The system has random access and Stat mode capabilities. You can load samples, reagents, and supplies at any time.
High Throughput	The throughput is up to 240 tests per hour (excluding time to the first result).
Multiple Protocols	The flexible incubation capabilities allow multiple protocols. The system runs a broad range of tests, allowing you to consolidate workstations.
Sample Management	The system performs automatic dilutions, schedules reflex tests, and manages quality control data.
Sample Integrity	The system has a clot alert detection, management, and recovery feature, which detects complete obstructions in the sample probe and notifies the operator of the error condition.
System Management	Continuous monitoring of system, sample, and reagent status minimizes hands-on operator time at the system.
Refrigeration	Reagents remain in the refrigerated reagent areas, so the system is always ready.
Barcode Scanners	Barcode scanners eliminate or minimize the need for keyboard entry of information.
Sample Containers	The system accommodates sample cups, micro-containers, and a wide range of tube sizes.
Multiple Master Curves	The system can store up to 250 Master Curves for all assays to allow efficient transition from one lot of reagent to another.
LIS Interface	Bidirectional laboratory information system (LIS) interfaces allow you to send and receive information to your LIS. The system supports ASTM and Japanese interface protocols.
Online Information	Immediate operator help can be accessed for any window or field. You can also access online procedures for maintenance and event codes.
Modem	System data can be remotely accessed by Chiron Diagnostics to provide immediate technical assistance specifically for your system.

36

66

Technology

Direct Chemiluminescence

Chemiluminescence is a chemical reaction that emits energy in the form of light. (1–5) When used in combination with immunoassay technology, the light produced by the reaction indicates the amount of analyte in a sample.

Direct chemiluminescence reactions directly measure the light energy without the use of added steps or amplifying molecules. (6 p. 337) The ACS:Centaur assays use acridinium ester (AE) as the chemiluminescent label. AE compounds do not require the addition of a catalyst or substrate and therefore provide a direct chemiluminescent technology. (6 p. 341–343) Direct chemiluminescence using AE is highly automatable and provides many benefits over other methods. (7 94)

The ACS:Centaur assays use the dimethyl form of AE because its stability allows long reagent shelf lives. (6 p.343; 8)

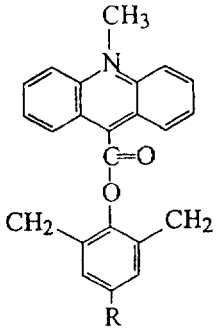

Dimethylacridinium Ester

In ACS:Centaur assays, AE is oxidized by hydrogen peroxide and the light emission is maximized by changing the environment from acidic to basic. Oxidation of AE occurs rapidly, with peak light emission occurring within one second. ACS:Centaur assays are designed to make the best use of the fast reaction time.

67

AE releases an intense, one-second burst of photons, which is a faster and more sensitive method than RIA or EIA methods. (6/345; 8)

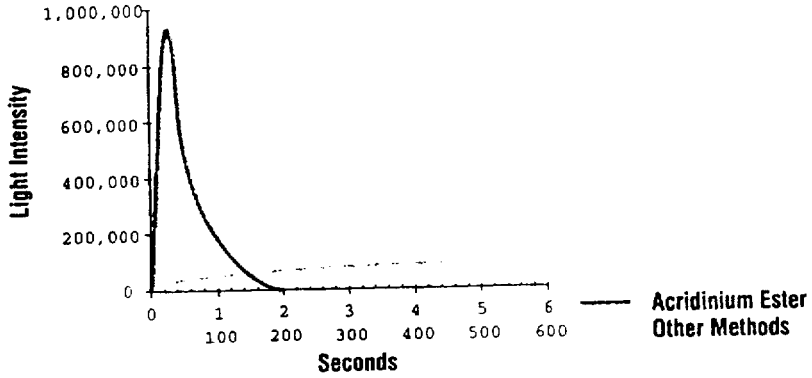

The AE molecule is much smaller than the alkaline phosphatase molecule used in EIA assays. This smaller size decreases blockage of binding sites, increases diffusion rates, and increases the assay sensitivity. (9)

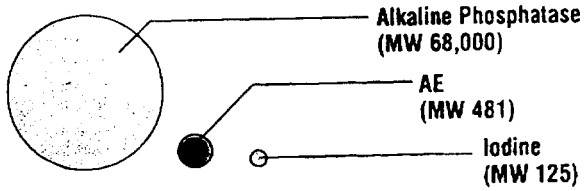

[Use spheres to denote relative sizes, not circles; or recalculate relative sizes w/ area]

Antibody Binding Principles

Antibodies are proteins that are produced by the immune system in response to a foreign substance (antigen). (T5) Antibodies specifically bind to the antigen that caused their production.

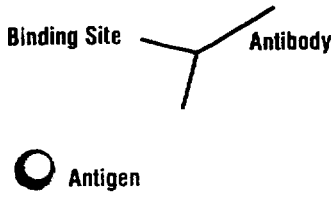

Antibodies are ideal for use in immunoassays because they can be produced to bind to a specific analyte. In immunoassays, antibodies bind to the analyte that is being measured.

A substance such as AE can be covalently bound to an antibody without altering its ability to bind to an antigen. To measure an analyte, some ACS:Centaur assays use antibodies that are covalently bound to AE.

69

35

69

Paramagnetic Particles and Magnetic Separation

Paramagnetic particles (PMP) are iron oxide crystals that are attracted to a magnetic field. (7) The ACS:Centaur assays use PMP coated with antibody or antigen, which is called the Solid Phase. (7) When the reaction mixture is exposed to a magnetic field, the PMP is drawn toward the magnets. While the magnets hold the PMP in place, materials not bound to the PMP are washed away.

The PMP provides approximately 50 times the reactive surface area of coated tubes or beads.(6) As a result, ACS:Centaur assays bind the analyte quickly and efficiently.

Assay Reaction Formats

The ACS:Centaur system directly measures the amount of light that the chemiluminescent reaction emits. ACS:Centaur assays use AE as the label in Lite Reagent and PMP as the Solid Phase. The system uses a variety of formats to detect antigens as well as antibodies. For more information about the reaction formats and principles for specific assays, refer to the product inserts.

The ACS:Centaur system applies the immunoassay binding principles of antibodies using different formats:

- sandwich format
- competitive format
- antibody capture format

Sandwich Format

Sandwich binding formats can use AE-labeled antibody or AE-labeled antigen. The sandwich format explained in this section uses AE-labeled antibody.

1. AE-labeled antibody is added to the sample. The AE-labeled antibody binds specifically to the sample antigen, which is being measured.

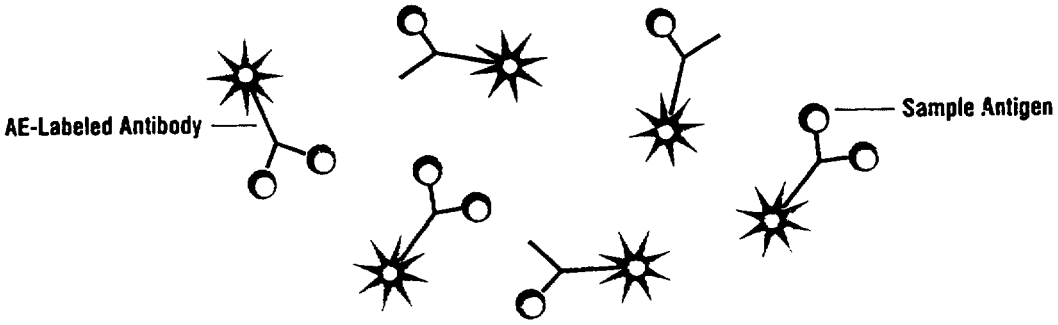

70

40

2. The PMP, which is covalently bound to antibody specific for the sample antigen, is added. The reaction mixture is incubated at 37°C. The PMP binds with the sample antigens bound to AE-labeled antibody.

[Add AE–antigen molecules to demonstrate what's happening in last sentence above]

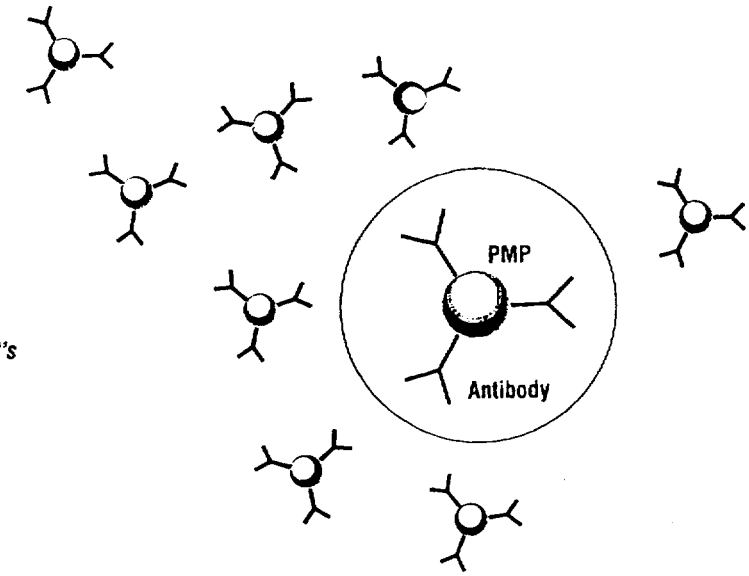

3. The reaction mixture is exposed to a magnetic field, which draws the PMP toward the magnets. While the magnets hold the PMP in place, everything not bound to the PMP is washed away. The cuvette now contains sample antigen bound to AE, which is bound to the PMP by the antibody.

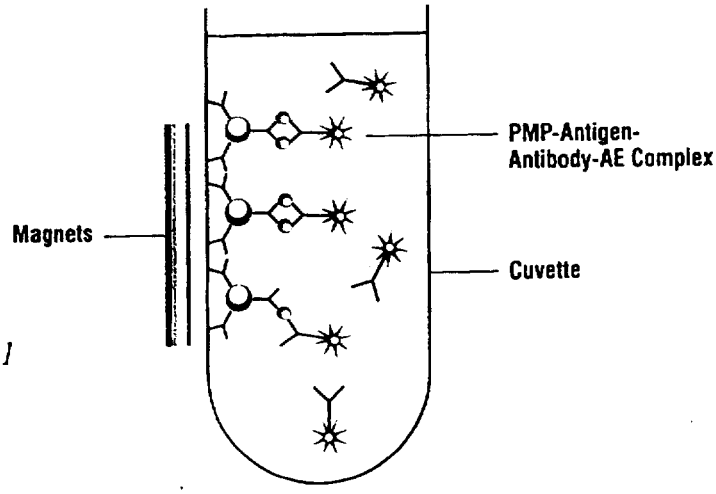

[Add info]

4. Acid and base are added to initiate the chemiluminescent reaction. The emission of photons is measured in relative light units (RLUs). Once the light produced from the oxidation of the AE is quantitated, the system calculates the concentration of the analyte.

   In a sandwich binding format, the sample concentration and the light emission have a direct relationship. The more sample antigen molecules that are present, the more AE that is present, and therefore the higher the light emission.

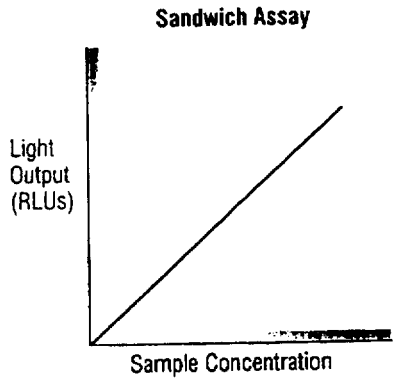

Competitive Format

Competitive binding formats include:

- AE-labeled antigen
- AE-labeled antibody

AE-Labeled Antigen

1. AE-labeled antigen and antibody-labeled PMP are added to the sample. The reaction mixture is incubated at 37°C. The AE-labeled antigen competes with sample antigen for limited binding sites on the antibody, which is covalently bound to PMP.

   The more sample antigen that is present, the less AE-labeled antigen that is bound. Alternatively, the less sample antigen that is present, the more AE-labeled antigen that is bound.

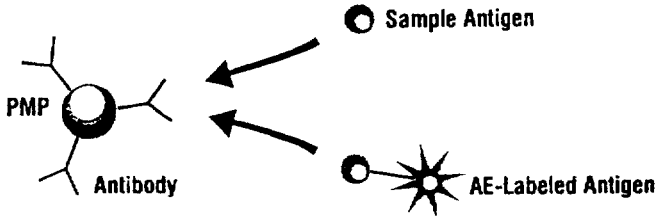

73

2. The reaction mixture is exposed to a magnetic field, which draws the PMP toward the magnets. While the magnets hold the PMP in place, everything not bound to the PMP is washed away. The cuvette now contains sample antigen and AE antigen bound to the PMP by the antibody.

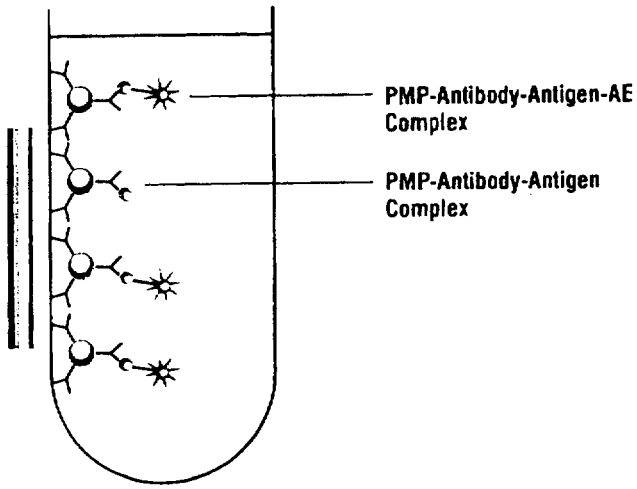

3. Acid and base are added to initiate the chemiluminescent reaction. The emission of photons is measured in RLUs. Once the light produced from the oxidation of the AE is quantitated, the system can calculate the concentration of the analyte.

   If the sample has a low concentration of antigen, most of the binding sites on the antibody are bound by AE-labeled antigen. This results in a high reading of RLUs from the oxidation of the AE.

   If the sample has a high concentration of antigen, most of the binding sites on the antibody are bound with sample antigen and few sites are bound with AE-labeled antigen. This results in a low reading of RLUs from the oxidation of the AE.

   In a competitive assay, the sample concentration and the light emission in RLUs have an inverse relationship.

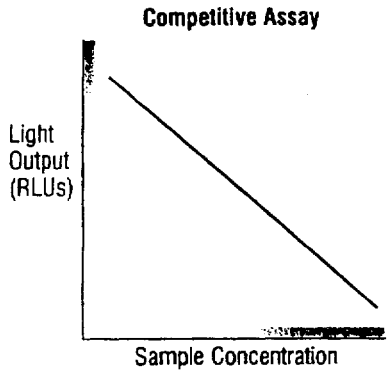

73

43

AE-Labeled Antibody

1. AE-labeled antibody and antigen-labeled PMP are added to the sample. The reaction mixture is incubated at 37°C. Antigen bound to PMP competes with sample antigen for limited binding sites on the AE-labeled antibody.

   The more sample antigen that is present, the less PMP-labeled antigen that is bound. Alternatively, the less sample antigen that is present, the more PMP-labeled antigen that is bound.

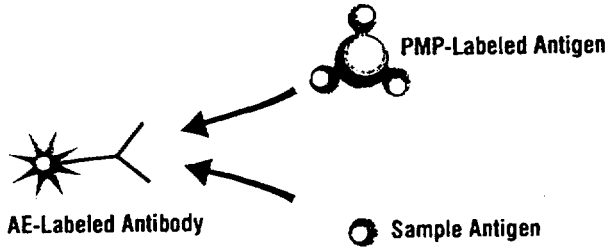

2. The reaction mixture is exposed to a magnetic field, which draws the PMP toward the magnets. While the magnets hold the PMP in place, everything not bound to the PMP is washed away.

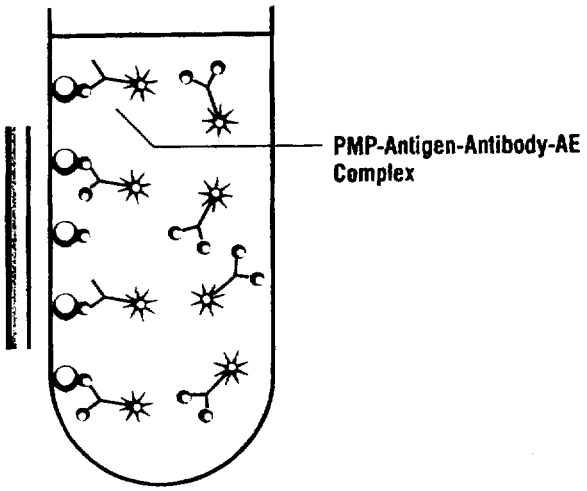

3. Acid and base are added to initiate the chemiluminescent reaction. The emission of photons is measured in RLUs. Once the light produced from the oxidation of the AE is quantitated, the system calculates the concentration of the analyte.

   If the sample has a low concentration of antigen, most of the binding sites on the antibody are bound by PMP-labeled antigen. This results in a high reading of RLUs from the oxidation of the AE.

74
44

If the sample has a high concentration of antigen, most of the binding sites on the antibody are bound with sample antigen and few sites are bound with PMP-labeled antigen. This results in a low reading of RLUs from the oxidation of the AE.

In a competitive assay, the sample concentration and the light emission in RLUs have an inverse relationship.

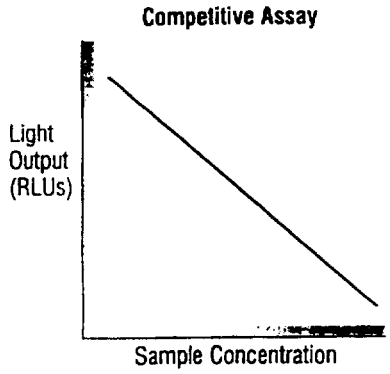

Antibody Capture Format

The antibody capture format is used when the analyte being measured is an antibody. In these assays, the sample antibody is the analyte in the reaction mixture. The reaction mixture contains a different antibody that is specifically directed against the antibody in the sample.

Antibody capture formats are characterized by two cycles of incubation and wash. The purpose of the first incubation/wash is to remove excess interfering substances in the sample.

The following example is an antibody capture assay that detects human IgM antibody in a patient sample.

1. Anti-human IgM antibody bound to PMP is added to the sample. The reaction mixture is incubated at 37°C. The human IgM antibody in the sample binds to the anti-human IgM antibody that is covalently bound to PMP.

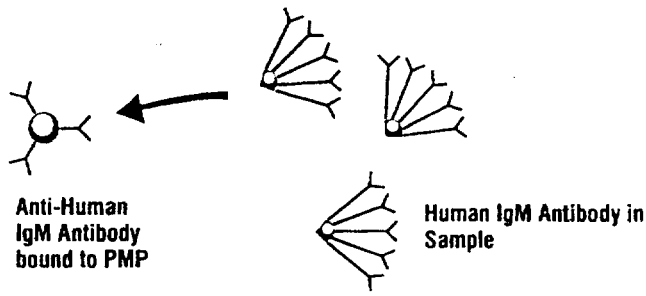

75

2. The reaction mixture is exposed to a magnetic field, which draws the PMP toward the magnets. While the magnets hold the PMP in place, everything not bound to the PMP is washed away. The cuvette now contains human IgM antibody captured by specific anti-human IgM antibody, which is bound to PMP.

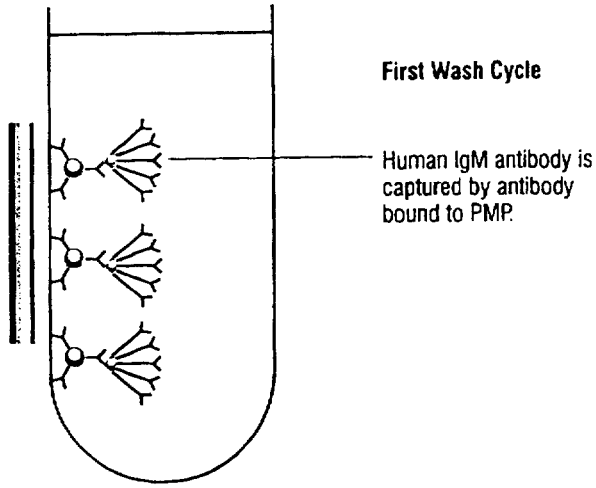

3. AE-labeled antigen is added. The reaction mixture is incubated at 37°C. The AE-labeled antigen has an affinity for the sample antibody.

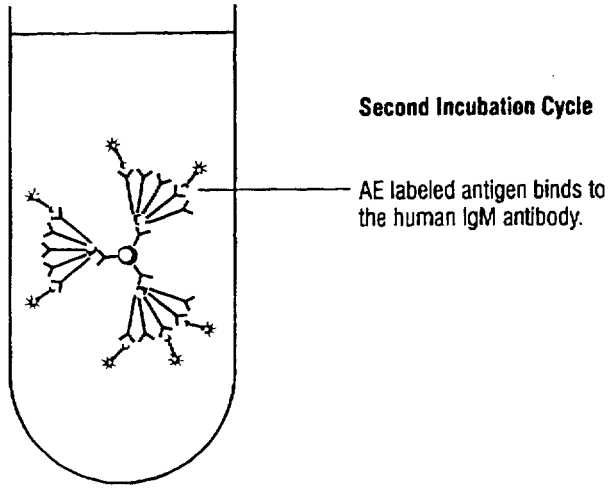

4. The reaction mixture is again exposed to a magnetic field, which draws the PMP toward the magnets. While the magnets hold the PMP in place, everything not bound to the PMP is washed away. The cuvette now contains AE-labeled antigen, bound to human IgM antibody, bound to PMP.

76

10

5. Acid and base are added to initiate the chemiluminescent reaction. The emission of photons is measured in RLUs. Once the light produced from the oxidation of the AE is quantitated, the system calculates the concentration of the analyte.

   The sample concentration and the light emission have a direct relationship in this example of an antibody capture format. The more sample antibody that is present, the more AE that is present, and therefore the higher the light emission.

Antibody Capture Format

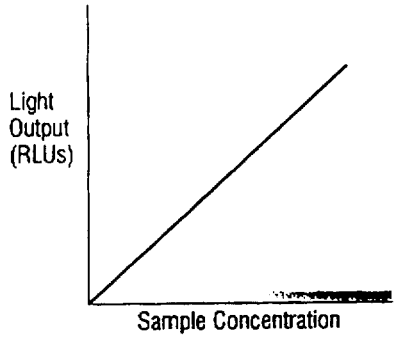

47 77 78

Assay Protocols

One-step and extended one-step protocols include one wash after the incubation, or one incubation/wash cycle. Two-step protocols include two incubation/wash cycles.

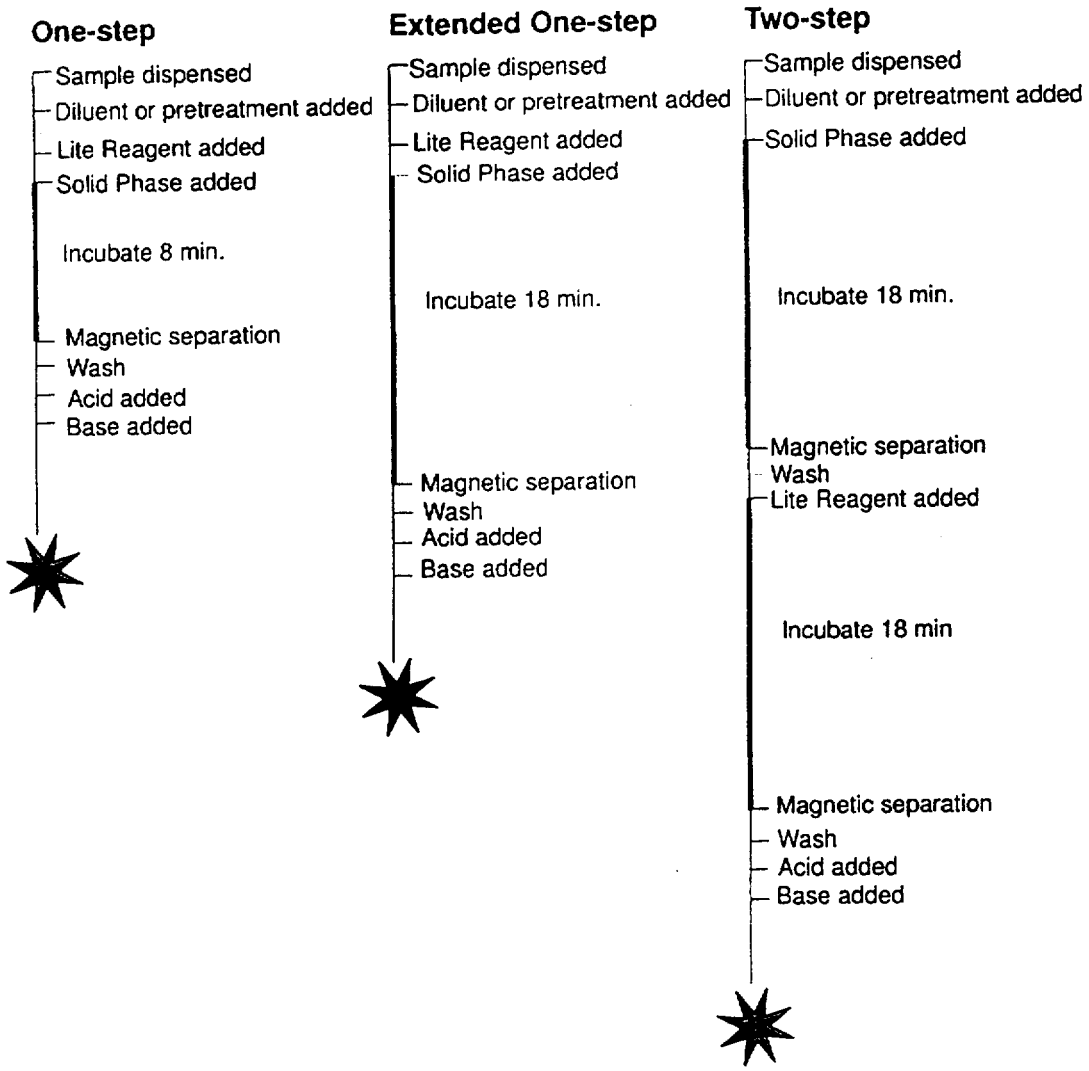

48

78

2 System Overview

Introduction 2-3

Sample Loading Area 2-5

Reagent Loading 2-8
Primary Packs 2-8
Primary Reagent Compartment 2-9
Ancillary Packs 2-10
Ancillary Reagent Queue 2-10

Supplies and Wastes 2-11

Test Sequence 2-12
Cuvette Loading 2-13
Incubation Ring 2-14
Sample Probe 2-15
Ancillary Probe 2-16
Reagent Probes 2-17
Aspirate Probes, Wash Stations, and Acid Probe 2-18
Elevator, Luminometer, and Base Probe 2-19

Introduction

This section introduces the operating sequence of the system and describes the location and function of the major subsystems and components in order to:

- keep the ACS:Centaur operating continuously for maximum efficiency
- perform the maintenance tasks
- understand the basic test processing sequence, which is essential for effective troubleshooting

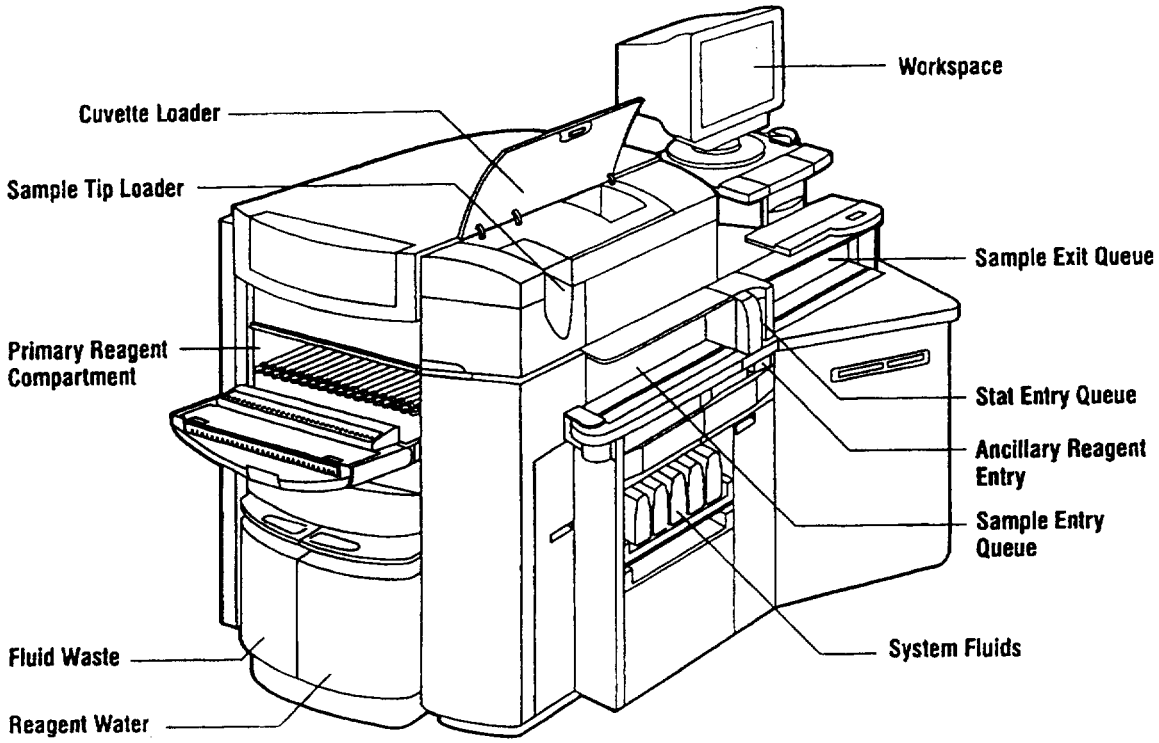

80

Operation of the ACS:Centaur system includes the following areas:

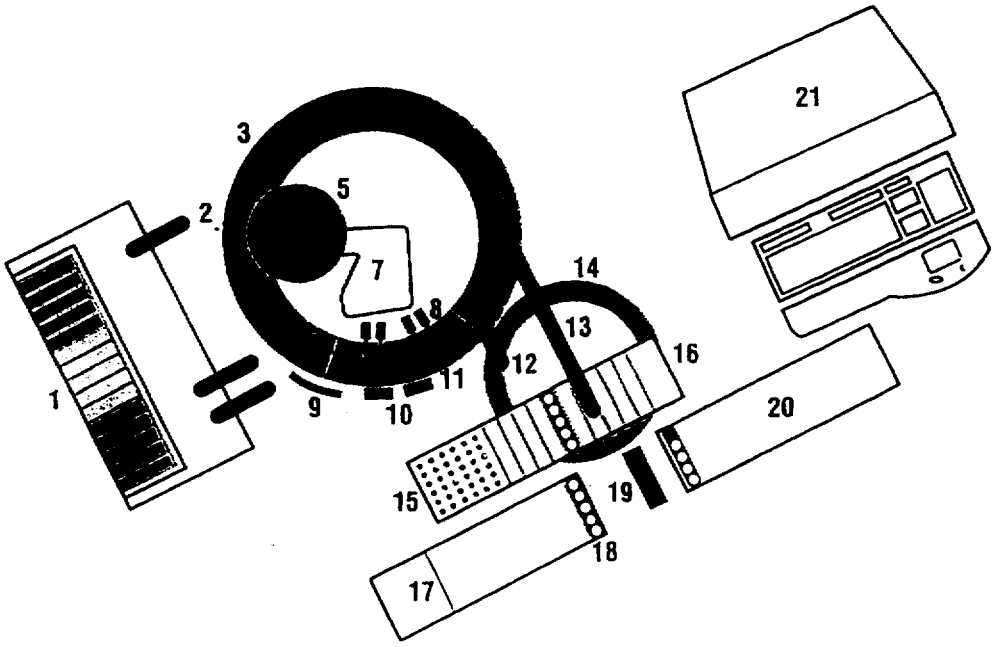

1 Primary Reagent Compartment
2 Primary Reagent Probes
3 Incubation Ring
4 Luminometer
5 Waste Probe
6 Base Probe
7 Cuvette Loading Bin
8 Aspirate Probes
9 Magnets
10 Wash Block
11 Acid Probe
12 Ancillary Probe
13 Sample Probe
14 Ancillary Queue
15 Sample Tip Tray
16 Inprocess Queue
17 Sample Entry Queue
18 Sample Rack
19 Stat Entry
20 Sample Exit Queue
21 Workstation

81

51

Sample Loading Area

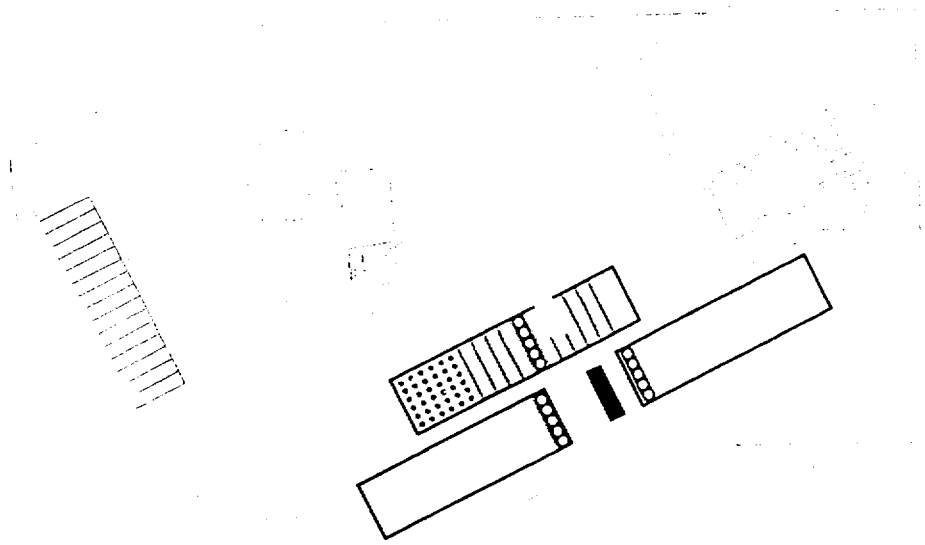

The operator selects the tube size for each sample rack, places the samples in the racks, and places the racks on the sample entry queue. The sample entry queue moves the racks to the inprocess queue.

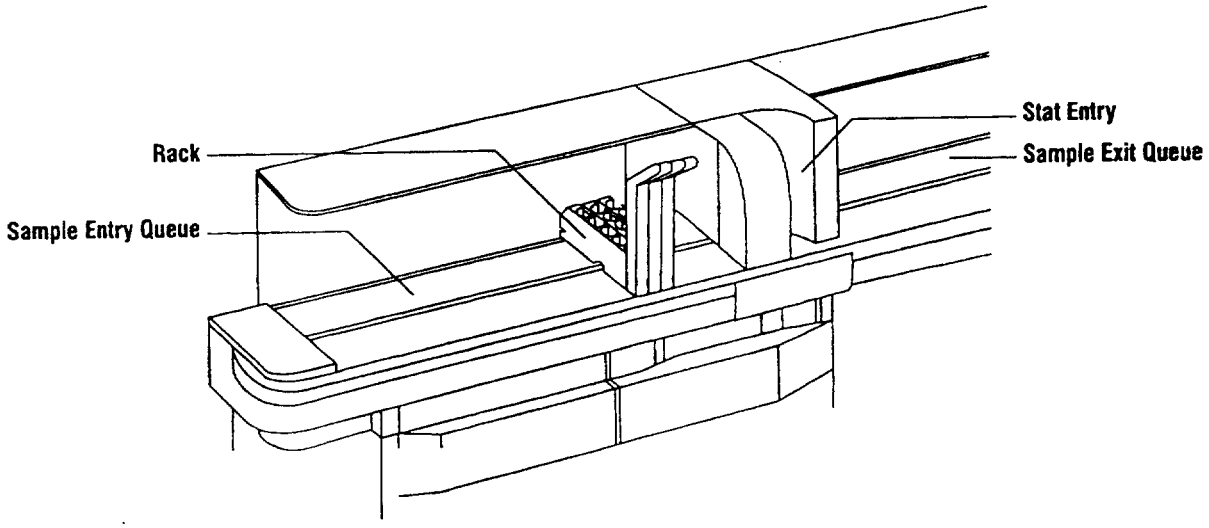

82

The sample rack is a universal, five-position rack that holds primary sample tubes or sample cups. The tube selector on each sample rack allows the operator to specify the tube size for the rack. The rack accommodates the tube sizes or sample cup sizes without additional adapters. The operator can specify up to four types of tubes at setup to be run on the system at one time.

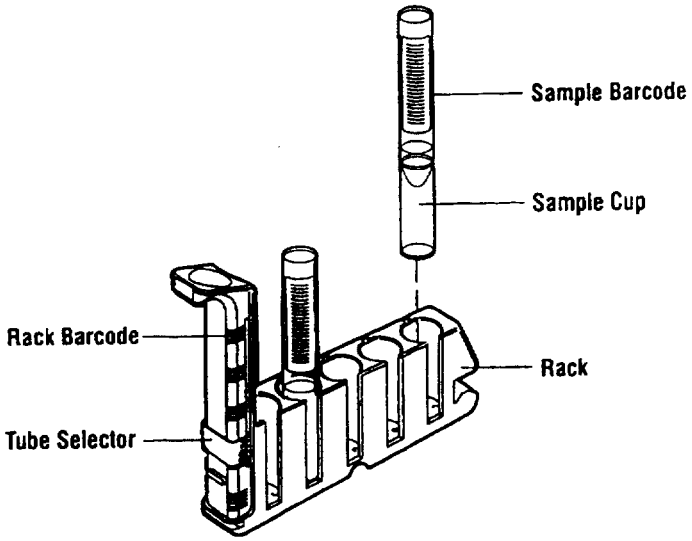

Each sample rack accommodates one sample cup or tube size on a rack. The barcode label on the sample cup or tube is visible and faces to the right when installed.

The operator places the racks in the sample entry queue, which holds up to 21 sample racks. If the sample entry queue is in standby, the operator presses the sample start button to activate the sample entry queue. The sample entry queue moves the sample racks one at a time to the inprocess queue.

The operator places Stat samples in a rack and installs the rack in the Stat entry. The system automatically assigns Stat priority to all samples in racks loaded in the Stat entry. The Stat entry moves the rack to the inprocess queue as soon as space is available. During setup, the operator can specify the number of inprocess queue spaces reserved for Stat racks.

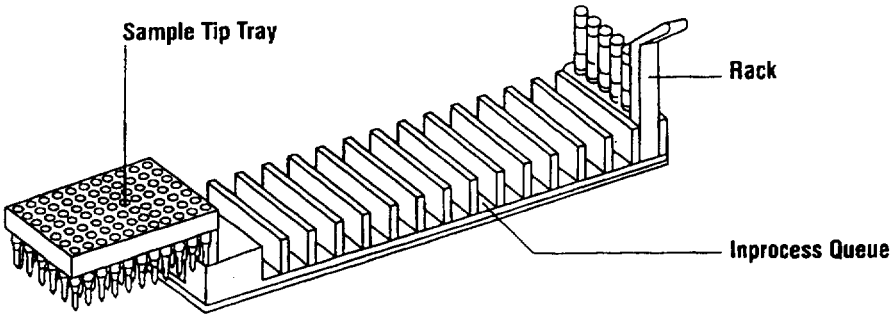

83

13

As racks enter the inprocess queue, the sample barcode scanner reads the barcode labels on each sample cup or tube. The scanner also scans the rack barcode.

On the left end of the inprocess queue is the sample tip loader, which holds a sample tip tray. The inprocess queue moves the sample tips to the sample probe and the sample probe picks up a sample tip. The probe aspirates the sample from the sample cup or primary tube and dispenses the sample into a cuvette.

After each sample in the rack has been sampled, the rack moves from the inprocess queue to the sample exit queue.

84

14

Reagent Loading

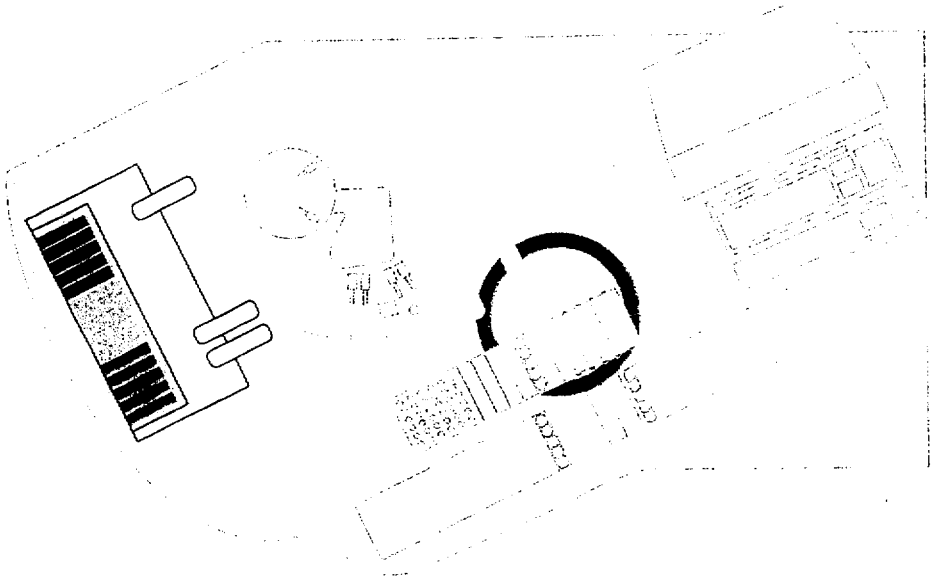

The operator can load ReadyPacks™ (primary reagent packs) and ancillary reagent packs while the system processes samples. The system stores up to 30 primary packs and up to 15 ancillary packs.

Primary Packs

Each primary pack contains Solid Phase and Lite Reagent with a third compartment for an additional reagent, if required. Each primary pack has a unique barcode that the system uses to identify the pack. The system tracks the volumes in each compartment and calculates the remaining number of tests in the pack.

After a reagent probe pierces the membrane on a pack, the reagent is stable for a minimum of 14 consecutive days unless otherwise stated on the label or in the product insert.

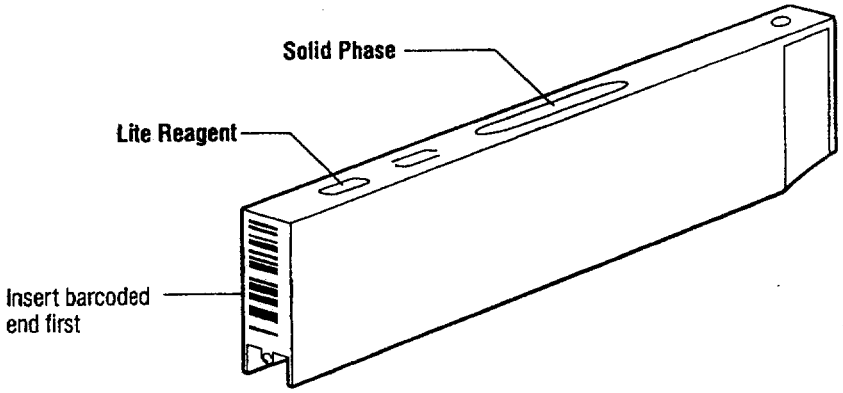

85

Primary Reagent Compartment

The operator loads the primary packs on the reagent slides in the primary reagent compartment, which stores the reagents at 6 to 14°C (43 to 57°F). The primary reagent shelf mixes the packs to maintain the reagents in suspension. Light-emitting diodes (LEDs) on the primary reagent door illuminate to indicate the pack status.

- If the LED is lit, then the pack cannot be removed because it is in use by the system.
- If the LED is not lit, then the pack can be removed.

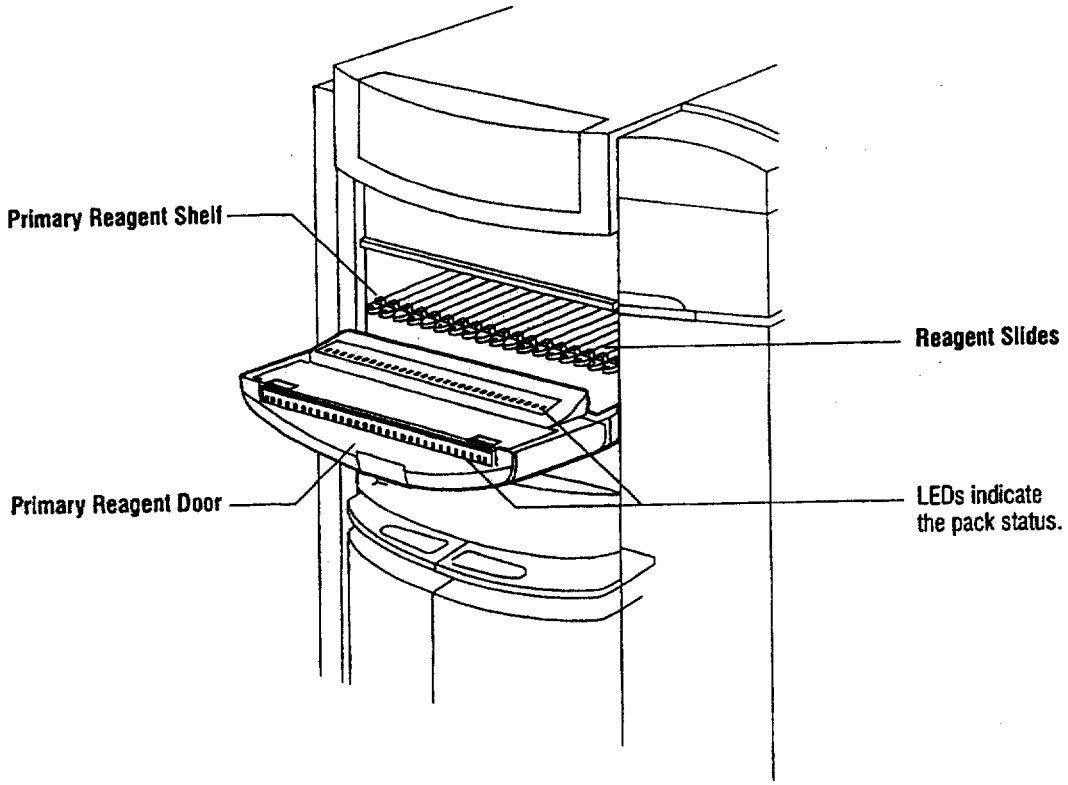

Ancillary Packs

Each ancillary pack contains one ancillary reagent. The system tracks the fluid volume in the ancillary packs that are ready to use. Each ancillary pack has a unique barcode that the system uses to identify the pack and track the volume remaining in the pack. Refer to the product inserts for ancillary reagent stability. Some ancillary packs are refillable.

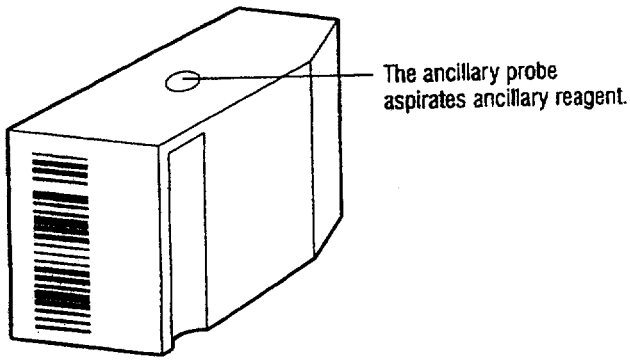

Ancillary Reagent Queue

The operator loads an ancillary pack in and removes the packs from the ancillary reagent entry. The ancillary reagent queue stores the ancillary packs at a temperature of 6 to 14°C (43 to 57°F).

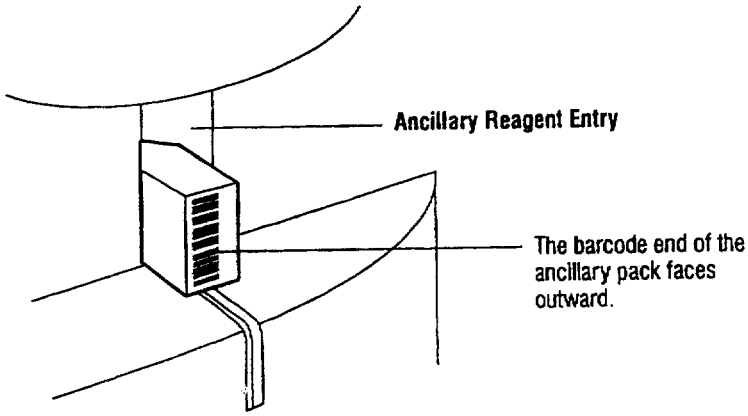

87

57

Supplies and Wastes

The system requires occasional replenishing of supplies and emptying of wastes. Refer to *Replenishing Supplies* in section 4 for procedures describing how to replenish supplies and empty wastes.

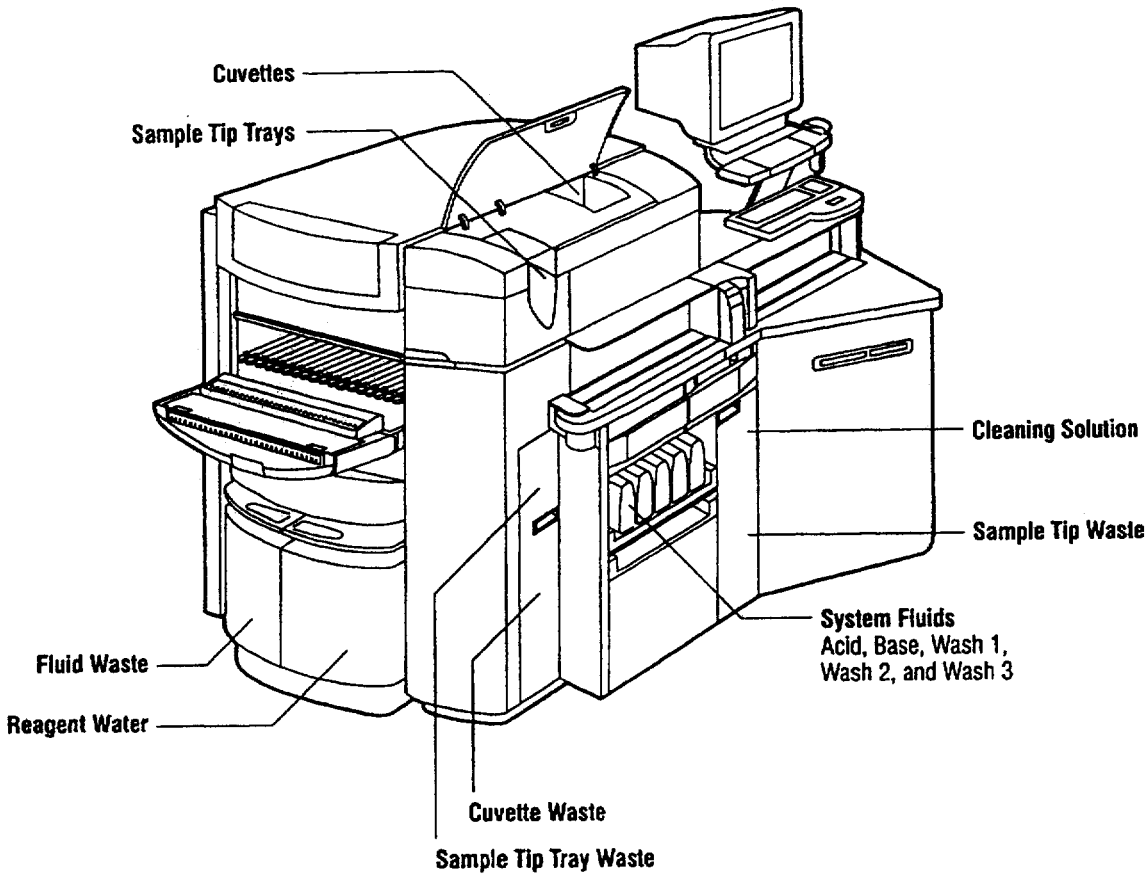

88

Test Sequence

The operator can start the sample entry queue by pressing the sample start button near the sample entry queue. The system automatically stops when sample processing completes.

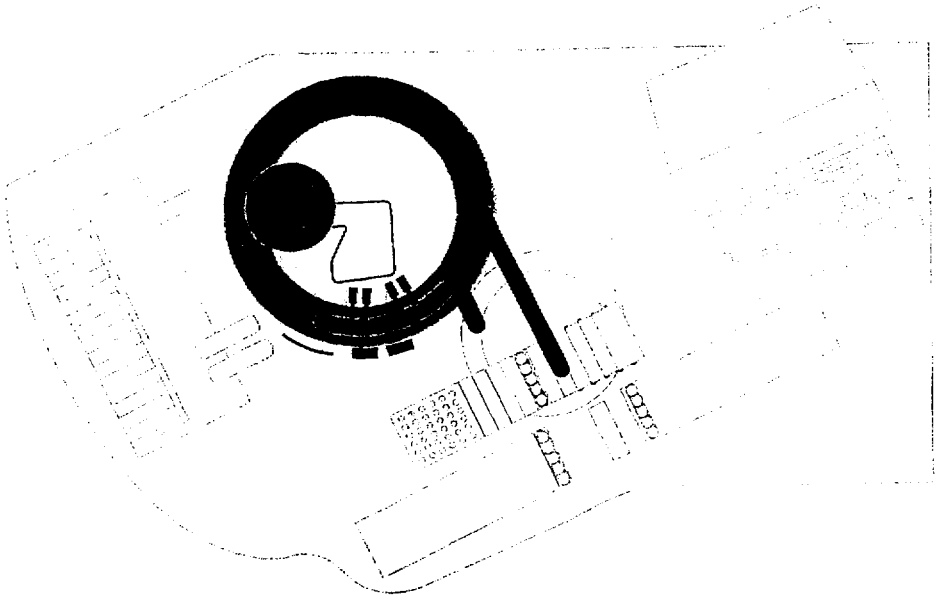

89

Cuvette Loading

The cuvette conveyor moves cuvettes from the cuvette loading bin to the orientation chute. The orientation chute correctly positions the cuvette before it enters the vertical cuvette chute. The vertical cuvette chute connects to the preheater, which warms the cuvettes to a temperature of 37°C. The cuvette then enters the incubation ring.

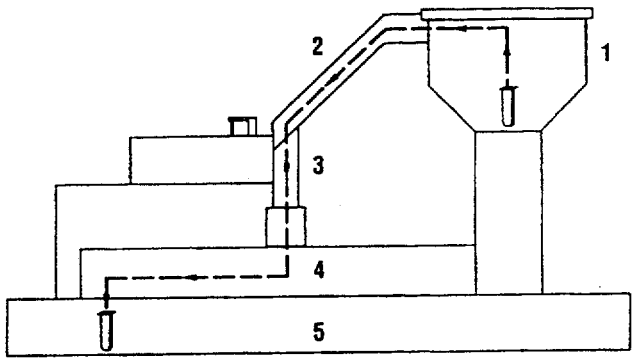

1 Cuvette Loading Bin
2 Orientation Chute
3 Vertical Cuvette Chute
4 Preheater
5 Incubation Ring

Incubation Ring

The incubation ring is a cylindrical, insulated track that incubates the assay reaction mixture in the cuvette. The ring moves cuvettes from the preheater to the probes and the magnets. The ring advances the cuvettes at 15-second intervals and incubates the cuvettes at 37°C. The magnets attract the magnetic particles (PMP) to the side of the cuvette and separate the bound sample from the unbound sample during the aspirate and wash cycles. The ring then moves the cuvette to the luminometer.

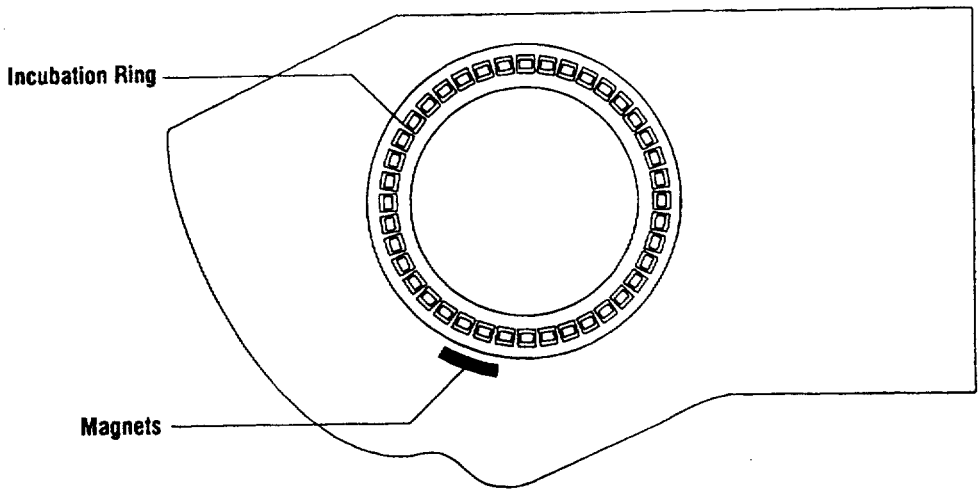

91

61

Sample Probe

The sample moves from the sample entry queue or the Stat entry past the barcode reader to the inprocess queue. The sample then moves to the sample probe for sampling and then to the sample exit queue.

The sample probe picks up a disposable sample tip from the sample tip tray. The sample probe aspirates sample from the inprocess queue, dispenses sample into a cuvette in the incubation ring, and dilutes the sample if requested. After dispensing the sample, the tip remover removes the sample tip.

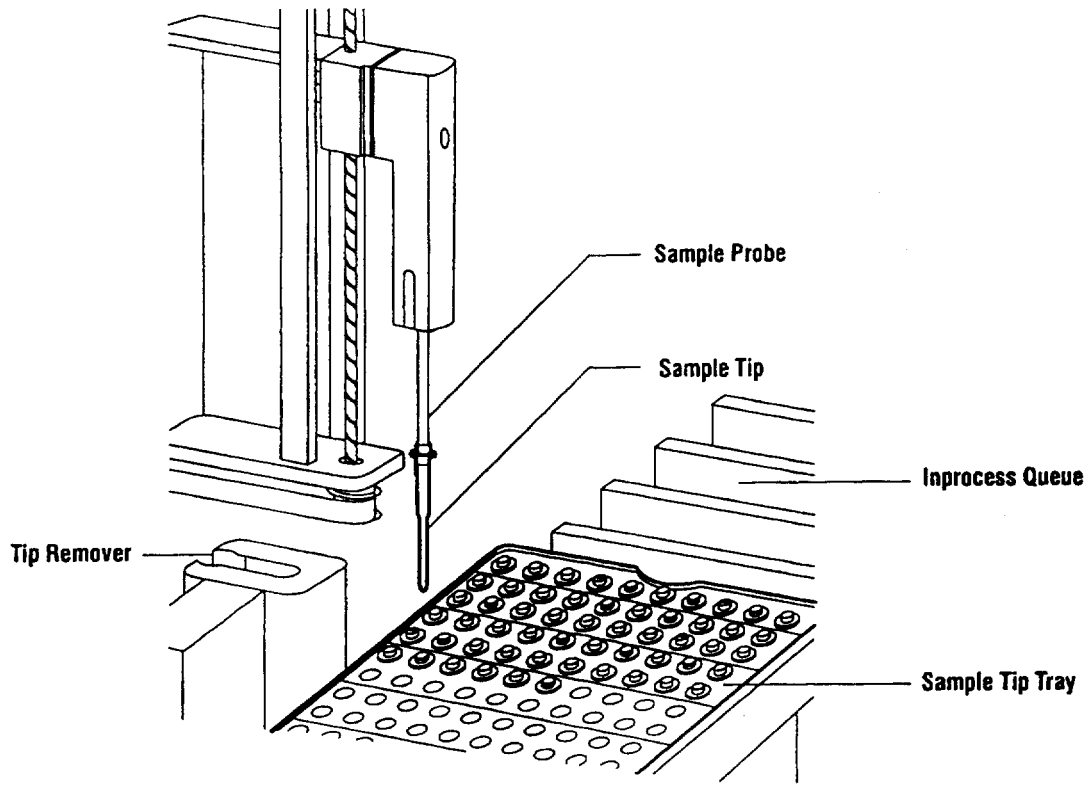

The clot alert feature detects complete obstructions in the sample probe by monitoring the fluid pressure in the sample probe. The fluid level sensor detects when the sample probe tip reaches fluid.

The system optimizes sampling for maximum throughput, taking into account the types of tests that are requested on the samples in the inprocess queue.

92

Ancillary Probe

The ancillary probe aspirates the ancillary reagents from the ancillary packs in the ancillary queue and dispenses ancillary reagents into cuvettes in the incubation ring. The rinse station rinses the probe with reagent water before each reagent aspiration.

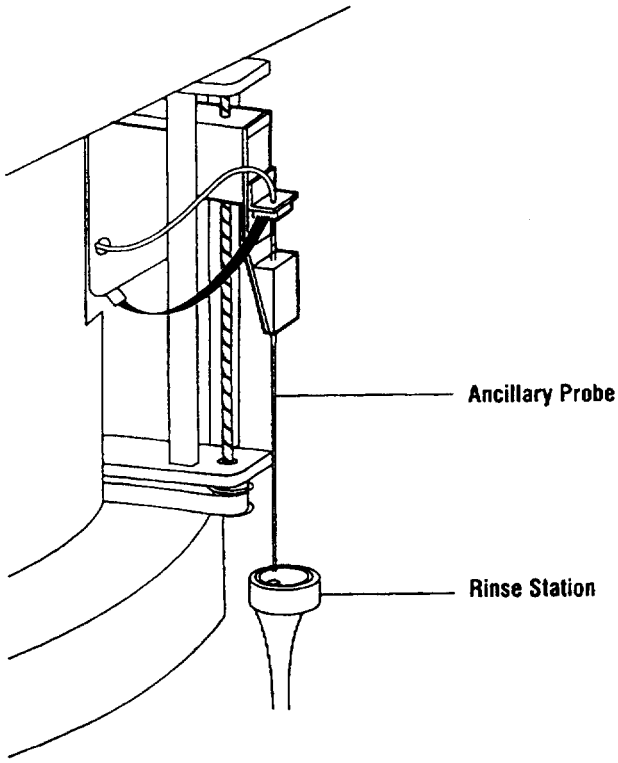

93

Reagent Probes

The incubation ring moves the cuvettes to the reagent probes. The three reagent probes move independently of each other to aspirate primary reagents from the primary packs and to dispense primary reagents into cuvettes in the incubation ring. The rinse stations rinse the probes with reagent water before each reagent aspiration.

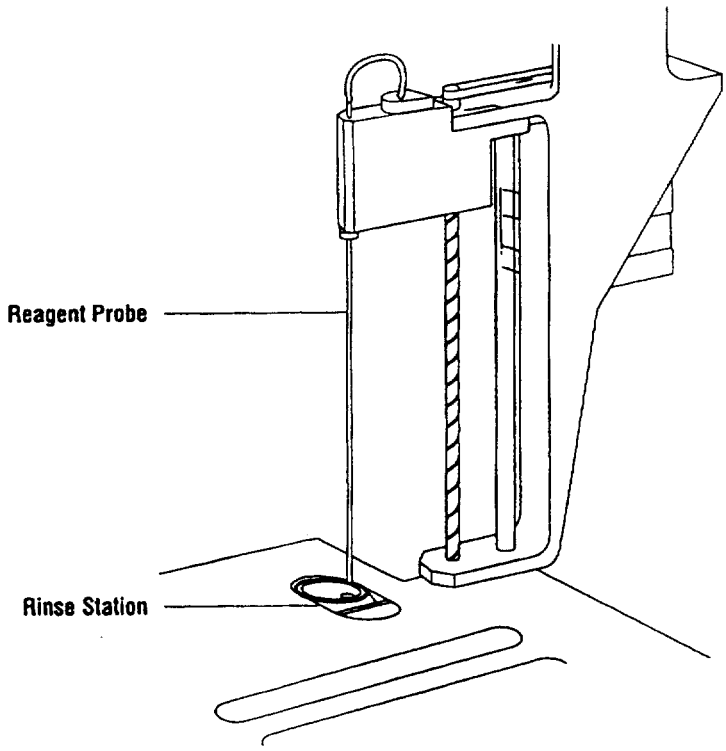

94

~~64~~ 95

Aspirate Probes, Wash Stations, and Acid Probe

The incubation ring moves the cuvettes to the aspirate probes and the acid probe. After the magnetic particles are pulled to the side of the cuvette, the aspirate probes draw fluid out of the cuvettes. The wash stations dispense wash fluid into the cuvettes to wash the magnetic particles. The displacement station dispenses wash fluid into the cuvettes to resuspend the magnetic particles.

The acid probe dispenses acid reagent into the cuvette. The system fluid drawer contains acid reagent and wash fluids.

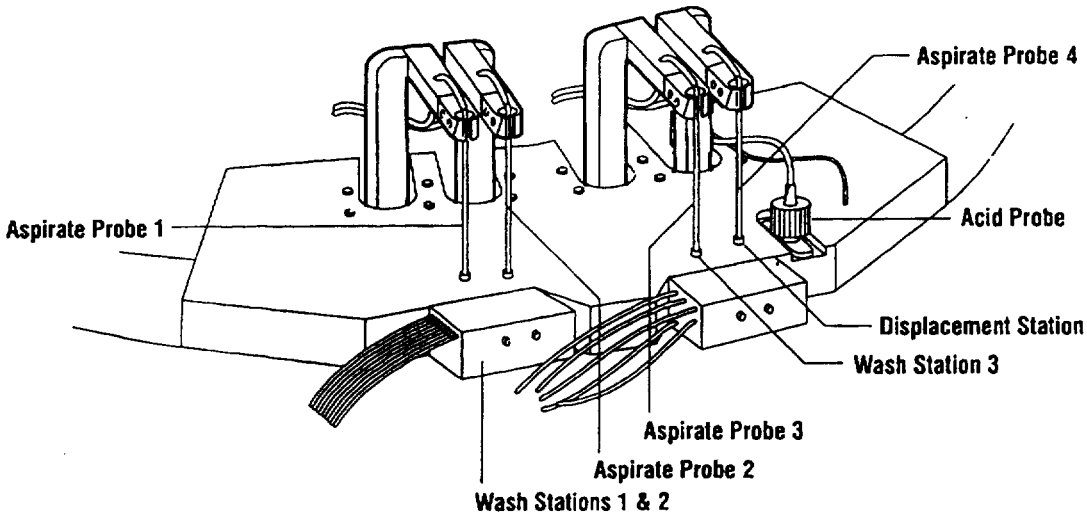

95

~~65~~ 96

Elevator, Luminometer, and Base Probe

After acid reagent is added to cuvettes, the incubation ring moves the cuvettes to the elevator. The elevator lifts cuvettes from the incubation ring into the luminometer.

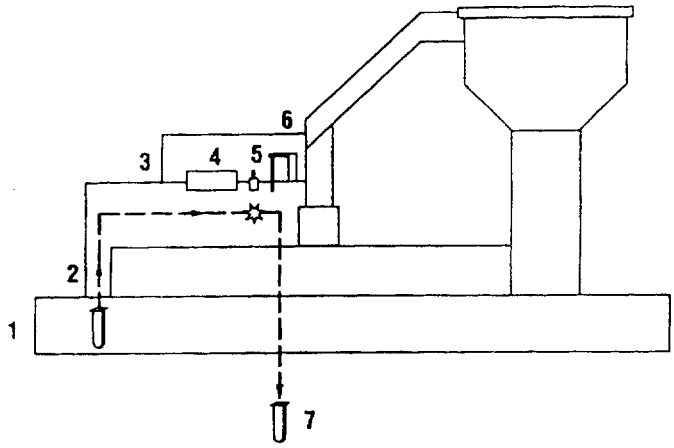

1	Incubation Ring	5	Base Probe
2	Elevator	6	Waste Probe
3	Luminometer	7	Cuvette
4	PMT		

The luminometer has a photomultiplier tube (PMT) with photon-counting electronics, a reference LED, a base probe, and a waste probe. Base reagent is injected into the cuvette, and the chemiluminescent reaction occurs and emits light. The luminometer measures the light as relative light units (RLUs). The waste probe then aspirates the waste fluid from the cuvette and the cuvette drops into the cuvette waste bin.

96

3 Workstation

Workstation Components	**3-3**
GlidePoint Pointing Device	3-3
Barcode Scanner	3-4
Keyboard	3-5
Monitor	3-5
Workspace	**3-6**
Status Buttons	3-7
Task Buttons	3-8
Function Buttons	3-8
Window Components	**3-9**
Window Structure	3-9
Window Elements	3-9
Interacting with the Windows	3-11
Online Information	**3-12**
Windows	3-12
Fields and Buttons	3-12
Maintenance Activities	3-12
Event Codes	3-12

97

b)

48

Workstation Components

You use the ACS:Centaur workstation to control the operation of the system. The workstation consists of hardware and software that you use to interact with the system.

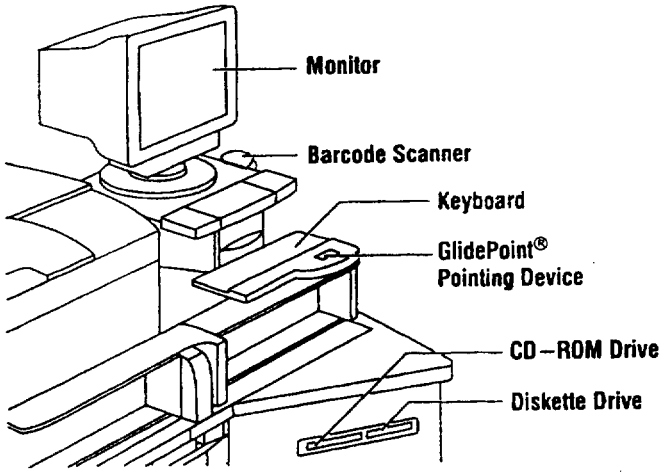

The workstation hardware includes the following components:

- GlidePoint® pointing device
- Barcode scanner
- Keyboard
- Monitor

GlidePoint Pointing Device

Use the GlidePoint pointing device to move the pointer on the screen and select workspace buttons, menu items, or window elements, and then enter information or select options.

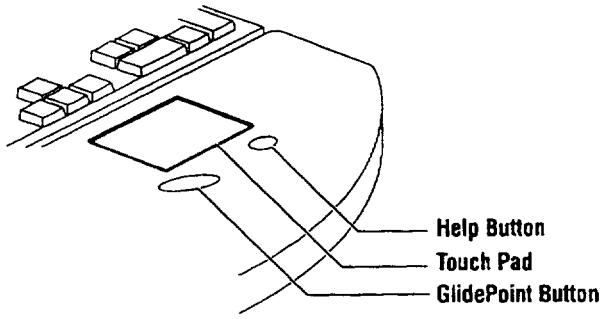

989

68 69

The GlidePoint pointing device is designed for biosafety. You can wear gloves while using the pointing device. The GlidePoint surface is resistant to spills and is easy to clean using standard laboratory disinfectants.

To move the pointer on the screen, slide your finger across the surface of the touch pad. To make a selection, move the pointer to the item and then press and release the GlidePoint button. To access online help, place the pointer over a field or a button and press the help (?) button.

If you want to . . .	*Then . . .*
select an item in a drop-down list	1. Move the pointer to the down arrow next to the field. 2. Press and release the GlidePoint button. The list of options opens. 3. Move the pointer to an option. 4. Press and release the GlidePoint button.
select an item in a table in order to perform a task	1. Move the pointer to an item in the table. 2. Press and release the GlidePoint button.
select an option	1. Move the pointer to the square or diamond next to an option. 2. Press and release the GlidePoint button.
enter information into a field	1. Move the pointer to a field. 2. Press and release the GlidePoint button. 3. Type the information into the field.

~~1~~99

69

Barcode Scanner

You can use the hand-held barcode scanner to enter barcoded information, such as the information on Master Curve cards or reagent packs.

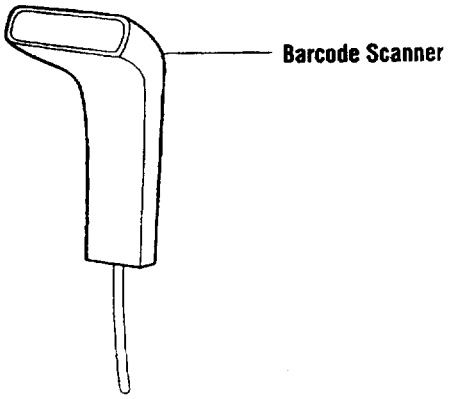

Keyboard

You can use the keyboard to enter text and to make selections.

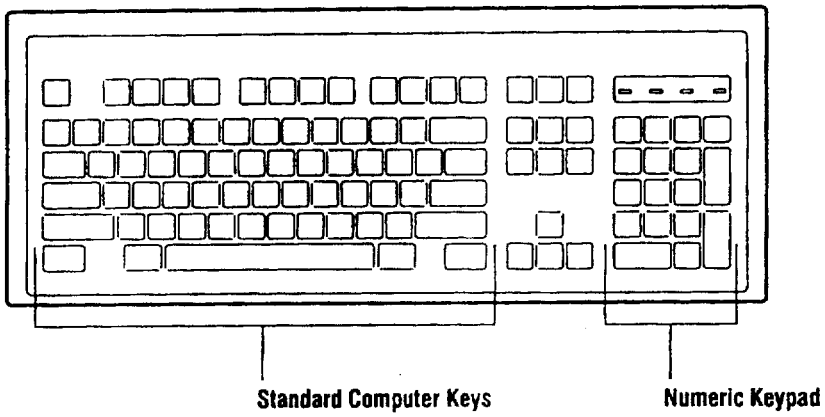

Monitor

The monitor is located on a flexible arm that moves to the optimum location for viewing.

100

70 101

The monitor displays the workspace, which allows access to windowing-type software to operate the system.

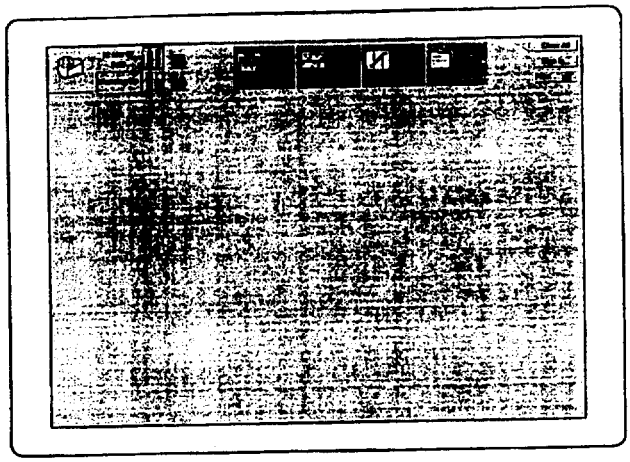

The workspace, which is always visible on the monitor, provides immediate access to all information that an operator requires to analyze samples, maintain the system, and track data. Refer to *Workspace*, page 3-7, for detailed information about the workspace and how to interact with the software.

Workspace

The workspace provides access to all system functions and information that an operator requires to operate the system. The workspace is similar to a benchtop. At a benchtop, you can pull several reports (windows) from different files (workspace buttons), and spread them out to review or to enter information. Although you can work on only one document at a time (active window), the others are ready for you. You can return the report to the file (close the window) or you can leave the report on the benchtop (leave the window open).

The workspace buttons are grouped into three areas: status buttons, task buttons, and function buttons.

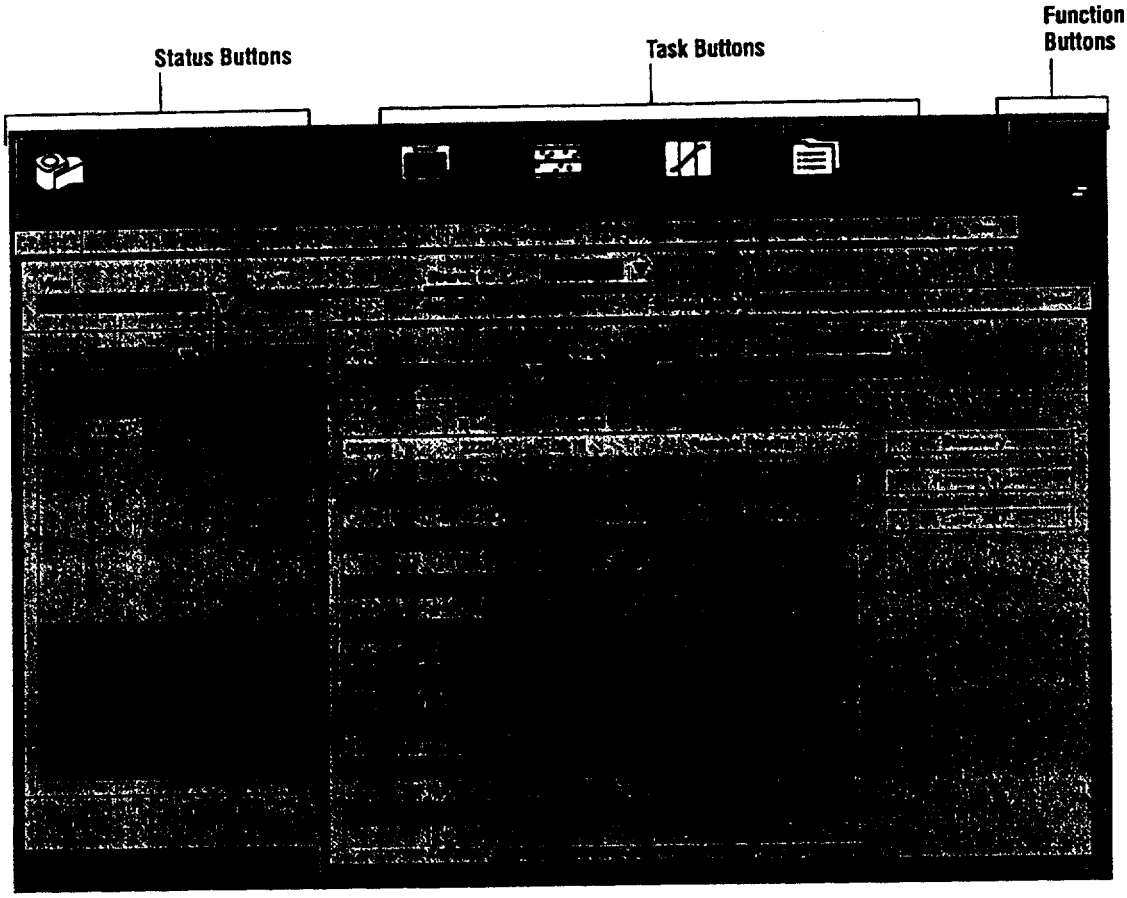

Refer to *Interacting with the Windows*, page xx, for information on moving, opening, and closing windows, and on selecting and entering data.

102

Status Buttons

The status buttons open windows that provide information on the condition of the entire system and of specific system areas.

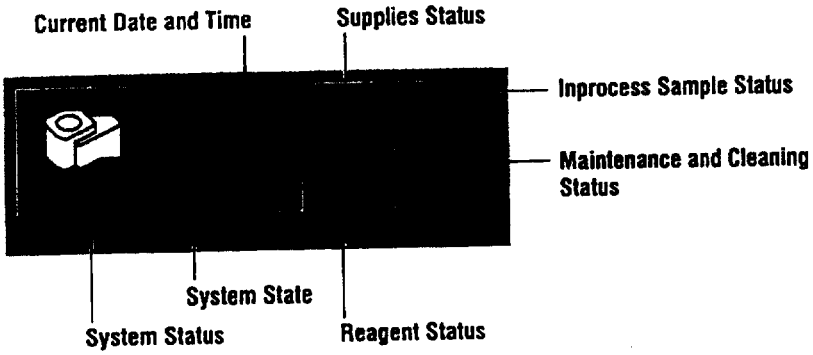

System Status	Accesses system status, event log, diagnostic tools, and information about the system.
Date and Time	Provides the current date and time.
System State	Provides information about the current state of the system.
Supplies Status	Provides information about sample tip and cuvette supplies, and system fluid and waste levels.
Inprocess Sample Status	Provides information about the status of the inprocess samples, such as when the result is due, insufficient sample volume, no request, and other messages.
Maintenance and Cleaning Status	Accesses the maintenance and cleaning schedule, log, and procedures.
Reagent Status	Provides information about onboard primary and ancillary reagents. Allows you to enter reagent data, activate reagent packs, or inactivate reagent packs.

The background color of the status buttons changes from grey to yellow or red to indicate that a system area requires attention:

- Yellow indicates that a warning condition exists, such as a low supply.
- Red indicates that a failure condition exists, such as an empty supply, that may cause the system to stop aspirating or processing samples.

Task Buttons

The task buttons provide access to windows associated with specific tasks. When selected, each button displays a list of the most frequently used windows in that area.

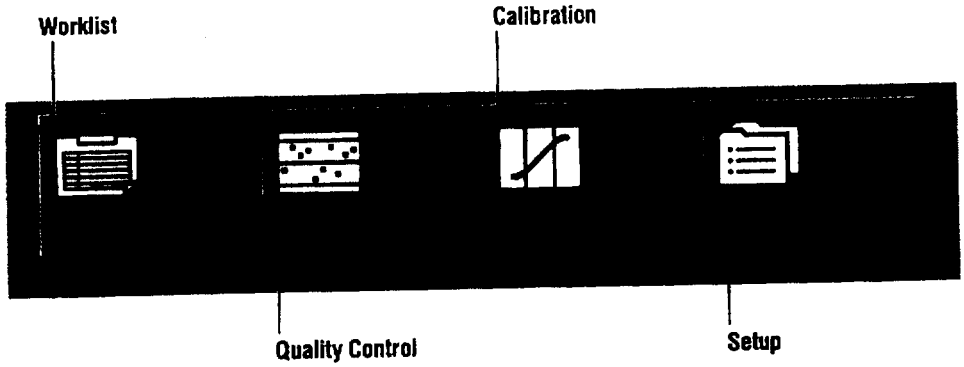

Worklist	This button accesses tasks associated with analyzing samples and reporting results such as scheduling samples, performing dilutions, and reviewing results.
Quality Control	This button accesses quality control tasks such as defining controls, defining rules, Levey-Jennings charts, and reviewing results.
Calibration	This button accesses calibration tasks such as status of current calibrations, defining Master Curves, defining calibrators, and reviewing calibration results.
Setup	This button accesses setup tasks such as reference ranges, dilutions, reflex tests, profiles, and data administration.

Function Buttons

The function buttons provide additional capabilities related to the workspace such as closing all windows, accessing system security, and requesting printed reports.

Select Close All to close all open windows.

Select Sign In to enter your initials and a password.

Select Print to access a menu of reports available fc. printing.

104

Window Components

Window Structure

On the workspace, related information and tasks are grouped in windows. The windows are designed with a common organization. Since the purpose of each window is unique, the organization of each window may vary to best achieve the objective of each window.

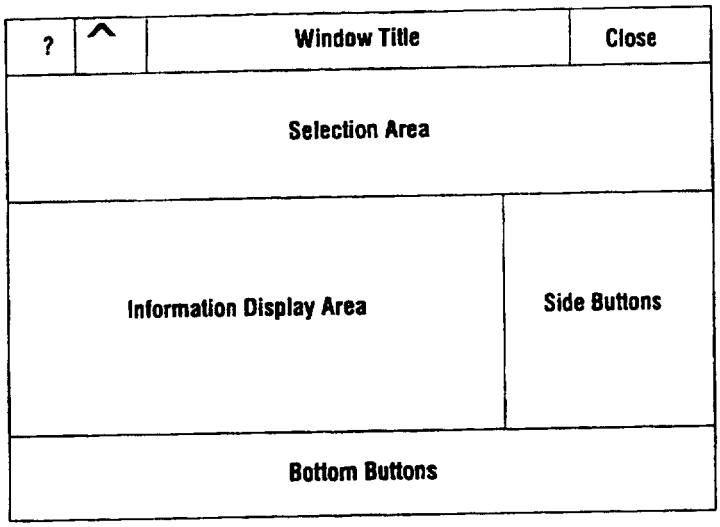

?	Select this symbol to access window help.
^	Select this symbol to move the window behind other windows.
Window Title	This title indicates the task area and the name of the specific window (for example, Worklist– Summary).
Close	Select this symbol to close the window.
Selection Area	The fields within the selection area control the information that is displayed in the window and the order of information display.
Information Display Area	This area displays the selected information.
Side Buttons	These buttons perform actions or open windows that provide more information about the selected information in the display area.
Bottom Buttons	These buttons act on all information displayed or open additional windows.

Window Elements

Window elements are the components on the windows that enable you to make selections and interact with the windows.

105

Interacting with the Windows

You can open a window from the workspace task buttons, the workspace status symbols, or from another window.

If you want to . . .	*Then . . .*
open a window from a task button	1. At the workspace, move the pointer to a task button. 2. Press and release the GlidePoint button. The drop-down list of window titles opens. 3. Move the pointer to a window title. 4. Press and release the GlidePoint button.
open a status window from a workspace status button	1. At the workspace, move the pointer to a status button. 2. Press and release the GlidePoint button.
open a window containing related information from another window	1. Select an item in a table. 2. Move the pointer to a button with an ellipsis (...). 3. Press and release the GlidePoint button. The new window displays information related to the item selected in the previous window.
open a window from another window	1. Move the pointer to a button with an ellipsis (...). 2. Press and release the GlidePoint button. The new window displays related information entered in the previous window.
close one window	1. Move the pointer to the close symbol in the upper right corner of the window. 2. Press and release the GlidePoint button.
close all the windows at once	1. Move the pointer to the Close All button in the upper right corner of the workspace. 2. Press and release the GlidePoint button.

Online Information

The system provides online help and procedures to answer your questions about operating and maintaining the system, and correcting system problems. Information and procedures are provided for windows, and more specific information is provided for individual window elements such as buttons, fields, and tables. Online procedures are available for scheduled maintenance activities and event codes.

Windows

Window help provides operating procedures for options available at each window and brief instructions for using the window. To access help on a window, place the pointer on the ? button in the title bar and then press the GlidePoint button.

Fields and Buttons

Field help provides information and brief procedures for every field and button on a window. To access help on a field or button, place the pointer on the field or the button and then press the ? button on the GlidePoint® pointing device or the ? key on the keyboard.

Maintenance Activities

Maintenance activity information provides a brief procedure on how to perform the maintenance. To access information about a maintenance activity, select a maintenance activity in the Maintenance Log and then select the Procedure button. Refer to *Maintenance* in Section 7 for detailed maintenance information.

Event Codes

Event code information provides brief descriptions and procedures for isolating and solving system events. To access information about an event code, select the event code in the event log, and then select the Procedure button. When the online information window opens, select simple search from the search menu, and enter the event code for which you want information. Refer to *Troubleshooting* in Section 8 for detailed troubleshooting information.

4 Operating the System

Introduction **4-3**
Manually Entering Requests at a Stand-alone System 4-3
Manually Receiving Requests from the LIS 4-4
LIS Integrated with Dynamic Download 4-5
LIS Integrated with Host Query 4-7

Loading Sample Racks **4-9**
Loading Stat Samples 4-10

Replenishing Reagents **4-12**
Reviewing Reagent Inventory 4-12
Reviewing Reagent Status 4-12
Reviewing Primary Reagent Status 4-13
Adding Primary Reagent Packs 4-14
Reviewing Ancillary Reagent Status 4-14
Adding Ancillary Reagent Packs 4-15

Replenishing Supplies **4-16**
Reviewing Supplies Status 4-16
Preparing the Water and Waste Bottles 4-17
Adding Cuvettes 4-19
Adding Sample Tips 4-20
Emptying the Waste Bins 4-21
Replacing the System Fluids 4-24

Reviewing Inprocess Samples **4-26**

Modifying the Worklist **4-28**
Reviewing the Worklist Summary 4-28
Querying an LIS 4-29
Adding Patient Requests 4-29
Entering Patient Demographics 4-30

Adding Stat Requests 4-31
Adding Batch Requests 4-31
Adding Calibrator Requests 4-32
Adding Control Requests 4-33
Entering Dilution Options 4-34
Entering Reagent Options 4-35
Editing Requests 4-36
Editing Batch Requests 4-36
Deleting Requests 4-37

Evaluating the Results **4-38**
Reviewing Results 4-38
Repeating a Test 4-39
Editing Results 4-39
Sending Results to an LIS 4-40
Printing Sample Results 4-40
Deleting Selected Sample Results 4-41
Deleting Worklist Results 4-42

Maintaining Data Files **4-43**
Archiving Results 4-43
Restoring Archived Results 4-44

109

79 110

Introduction

The ACS:Centaur system is a continuous operation system that accommodates many laboratory environments and workflow styles. As a result of this flexibility, you can perform tasks in the order that meets your needs.

For ease of use, the operating procedures in this section are arranged according to the following operating scenarios:

- Manually entering requests at a stand-alone system
- Manually receiving requests from the LIS
- LIS integrated with dynamic download
- LIS integrated with host query

Manually Entering Requests at a Stand-alone System

If the ACS:Centaur system is not connected to an LIS or HIS, you need to perform the following required procedures:

- Scheduling samples
- Loading the sample racks

You may also need to perform some of the following optional procedures:

- Scheduling and loading stats
- Modifying the worklist
- Reviewing inprocess samples
- Reviewing the reagent inventory
- Checking status
- Replenishing supplies
- Printing sample results
- Maintaining data files

You can use the following suggested operating procedure.

1. At the **Worklist–Schedule** window, schedule the requests.
2. At the Worklist–Summary window, review the worklist.

   If you want to view the worklist as you create it, open the Worklist–Summary window and select Summary at the Worklist–Schedule window if you want to view new requests on the worklist.
3. Check the supplies:

110

a. Visually verify that the cuvettes, sample tips, water, and system fluids are sufficient.

b. Visually verify that the space for solid and fluid waste is sufficient.

c. At the Worklist–Reagent Inventory window, visually verify that the reagent is sufficient for the number of requested tests.

   Load additional reagents if required, and then verify that the system reads the barcode. View the status of a primary pack at the Status–Primary Reagent window, or view the status of an ancillary pack at the Status–Ancillary Reagent window.

4. Load the samples in racks and load the racks in the sample entry queue.

5. At the Status–Samples window, verify that the system reads the barcodes.

   If the system cannot read the barcodes, enter the SID.

6. At the Worklist–Summary window, sort by Scanned and select Time Due at the Results column to track the progress of samples.

7. During operation, observe the system workspace for symbols that turn yellow or red.

   If you see symbols that turn yellow or red, check the status.

8. Remove the racks from the sample exit queue and load additional racks as required.

9. Review the results and release On Hold results, if required.

10. Print reports, if required.

Manually Receiving Requests from the LIS

If the ACS:Centaur system manually receives requests from an LIS or HIS, you need to perform the following required procedure:

- Loading the sample racks

You may also need to perform some of the following optional procedures:

- Scheduling and loading stats
- Modifying the worklist
- Reviewing inprocess samples
- Reviewing the reagent inventory
- Checking status
- Replenishing supplies
- Printing sample results
- Maintaining data files

111

81 112

You can use the following suggested operating procedure.

1. At the Worklist–LIS Communications window, download the requests from the LIS.
2. At the Worklist–Summary window, review the worklist.

   If you want to view the worklist as you create it, open the Worklist–Summary window and select Summary at the Worklist–Schedule window if you want to view new requests on the worklist.
3. Check the supplies:
   a. Visually verify that the cuvettes, sample tips, water, and system fluids are sufficient.
   b. Visually verify that the space for solid and fluid waste is sufficient.
   c. At the Worklist–Reagent Inventory window, visually verify that the reagent is sufficient for the number of requested tests.

      Load additional reagents if required, and then verify that the system reads the barcode. View the status of a primary pack at the Status–Primary Reagent window, or view the status of an ancillary pack at the Status–Ancillary Reagent window.
4. Load the samples in racks and load the racks in the sample entry queue.
5. At the Status–Samples window, verify that the system reads the barcodes.

   If the system cannot read the barcodes, enter the SID.
6. At the Worklist–Summary window, sort by Scanned and select Time Due at the Results column to track the progress of samples.
7. During operation, observe the system workspace for symbols that turn yellow or red.

   If you see symbols that turn yellow or red, check the status.
8. Remove the racks from the sample exit queue and load additional racks as required.
9. Review the results and release On Hold results, if required.
10. At the Worklist–LIS Communications window, send the results to the LIS.

LIS Integrated with Dynamic Download

If the ACS:Centaur system is connected to an LIS or HIS and uses dynamic downloading, you need to perform the following required procedure:

- Loading the sample racks

You may also need to perform some of the following optional procedures:

- Loading Stats

112

- Scheduling samples
- Querying an LIS
- Modifying the worklist
- Reviewing inprocess samples
- Reviewing the reagent inventory
- Checking status
- Replenishing supplies
- Sending results to an LIS
- Maintaining data files

You can use the following suggested operating procedure.

1. At the Worklist–Summary window, review the worklist.

   If you want to view the worklist as you create it, open the Worklist–Summary window and select Summary at the Worklist–Schedule window if you want to view new requests on the worklist.

2. Check the supplies:
   a. Visually verify that the cuvettes, sample tips, water, and system fluids are sufficient.
   b. Visually verify that the space for solid and fluid waste is sufficient.
   c. At the Worklist–Reagent Inventory window, visually verify that the reagent is sufficient for the number of requested tests.

      Load additional reagents if required, and then verify that the system reads the barcode. View the status of a primary pack at the Status–Primary Reagent window, or view the status of an ancillary pack at the Status–Ancillary Reagent window.

3. Load the samples in racks and load the racks in the sample entry queue.
4. At the Status–Samples window, verify that the system reads the barcodes.

   If the system cannot read the barcodes, enter the SID.

5. At the Worklist–Summary window, sort by Scanned and select Time Due at the Results column to track the progress of samples.
6. During operation, observe the system workspace for symbols that turn yellow or red.

   If you see symbols that turn yellow or red, check the status.

7. Remove the racks from the sample exit queue and load additional racks as required.
8. Review the results and release On Hold results, if required.

113

LIS Integrated with Host Query

If the ACS:Centaur system is connected to an LIS or HIS, and you can use host query, you need to perform the following required procedures:

- Loading the Sample Racks
- Querying an LIS

You may also need to perform some of the following optional procedures:

- Loading Stats
- Scheduling samples
- Modifying the worklist
- Reviewing inprocess samples
- Reviewing the reagent inventory
- Checking status
- Replenishing supplies
- Sending results to an LIS
- Maintaining data files

You can use the following suggested operating procedure.

1. Check the supplies:
   a. Visually verify that the cuvettes, sample tips, water, and system fluids are sufficient.
   b. Visually verify that the space for solid and fluid waste is sufficient.
   c. At the Worklist–Reagent Inventory window, visually verify that the reagent is sufficient for the number of requested tests.

      Load additional reagents if required, and then verify that the system reads the barcode. View the status of a primary pack at the Status–Primary Reagent window, or view the status of an ancillary pack at the Status–Ancillary Reagent window.
2. Load the samples in racks and load the racks in the sample entry queue.
3. At the Status–Samples window, verify that the system reads the barcodes.

   If the system cannot read the barcodes, enter the SID.
4. At the Worklist–Summary window, sort by Scanned and select Time Due at the Results column to track the progress of samples.
5. During operation, observe the system workspace for symbols that turn yellow or red.

   If you see symbols that turn yellow or red, check the status.

6. Remove the racks from the sample exit queue and load additional racks as required.
7. Review the results and release On Hold results, if required.

115

Loading Sample Racks

Refer to the assay product inserts for the volume of calibrators, controls, and patient samples required for each test.

BIOHAZARD: Refer to Appendix A, *Protecting Yourself from Biohazards*, for recommended precautions when working with biohazardous materials.

CAUTION: To avoid breakage of primary sample tubes, refer to Appendix F, *Specifications*, for acceptable sizes of primary sample tubes. At the Setup–Summary window, you can select **Barcode & Tube Type** to display the four sizes of sample tubes or sample cups that you selected to run on the system.

NOTE: The barcode should adhere completely to the tube or sample cup. Placing more than two barcode labels on a primary sample tube can make the tube diameter too wide to fit in the rack. If a primary sample tube has more than two barcode labels, transfer the specimen to an appropriately labeled sample cup.

1. If you use sample cups:
   a. Label sample cups with the appropriate calibrator, control, or patient sample barcode labels.

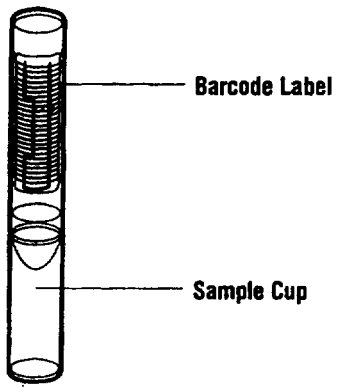

   b. Dispense the appropriate volume of sample into the labeled sample cups.

CAUTION: The rack must contain only one size of sample cup or tube. The rack indicator must be positioned at the correct setting for the size of sample cup or tube.

2. Load each sample container into the rack.

116

86 117

Ensure that the barcode label on the sample cup is clearly visible through the slot in the rack.

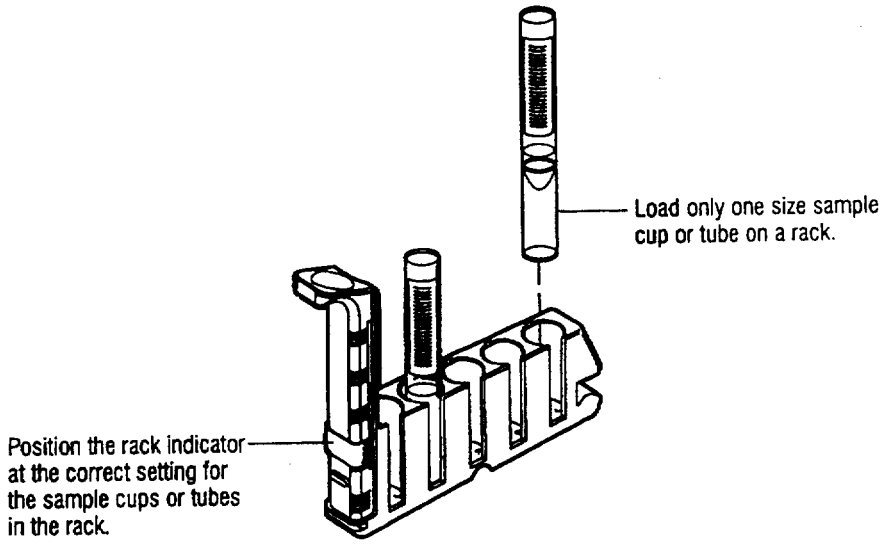

3. Load the rack in the sample entry queue, ensuring that the rack fits securely.

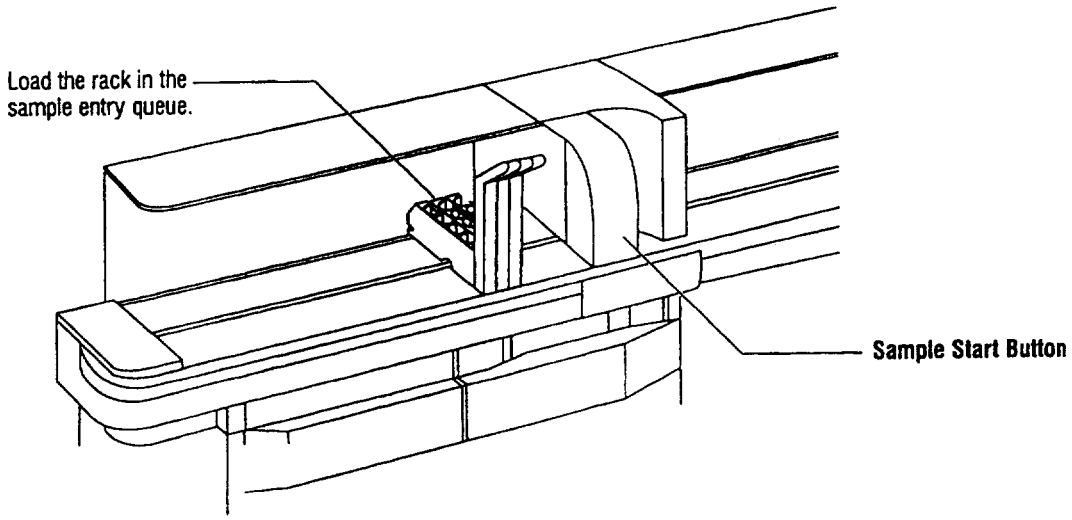

4. If the sample start button is off, press the button.
   The system moves the racks to the inprocess queue.
5. When testing completes, remove the racks from the sample exit queue.

Loading Stat Samples

Use this procedure to load Stat samples while the system processes the worklist.

1. If you are using the ACS:Centaur workstation to schedule tests manually, schedule the Stat sample as described in *Scheduling Patient Samples*, page 4-29.
2. Load the sample tube or cup in a rack.

   NOTE: All samples in the rack are performed at Stat priority.
3. Load the rack into the Stat entry.

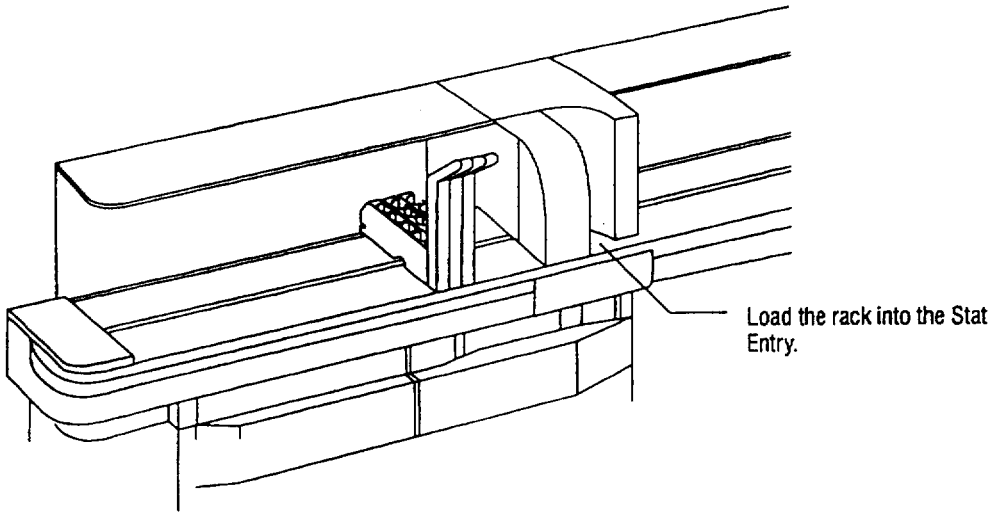

118

Replenishing Reagents

Reviewing Reagent Inventory

The reagent inventory allows you to determine if sufficient primary reagents and ancillary reagents are loaded to complete the scheduled tests. The number of scheduled tests and any reagent shortage are indicated on the Worklist–Reagent Inventory window.

Based on the inventory information, you can replace empty reagent or diluent packs, and add additional reagent or diluent packs. Based on the status messages, you can take corrective action.

1. At the workspace, select **Worklist**.
2. Select **Reagent Inventory**.

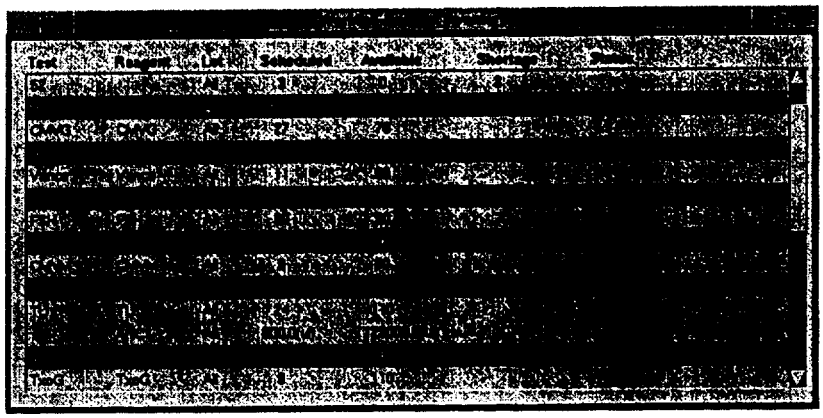

3. Verify that the system has the required reagents to complete the scheduled tests:
   - number of tests on the system for primary packs
   - volume for ancillary reagents

Reviewing Reagent Status

Reagent status displays the status of both primary and ancillary reagents.

- If you select this button and there is a warning condition associated with a primary reagent, the Status–Primary Reagent window is displayed.
- If you select this button and there is a warning condition associated with an ancillary reagent, the Status–Ancillary Reagent window is displayed.
- If you select this button and there is a condition associated with the primary and ancillary reagents, both windows appear on the workspace.

119

Reviewing Primary Reagent Status

At the Status–Primary Reagent window you can perform the following activities:

- review LEDs associated with each primary reagent
- access the Status–Details window, which shows the reagent, tests, and status associated with a primary pack
- activate or inactivate a primary pack
- remove a pack from the system
- schedule a calibration for any lot of the selected test that is in the notification interval
- activate or inactivate a test
- open the Reagent Inventory window
- open the Ancillary Reagent window

1. At the workspace, select **Reagent Status**.

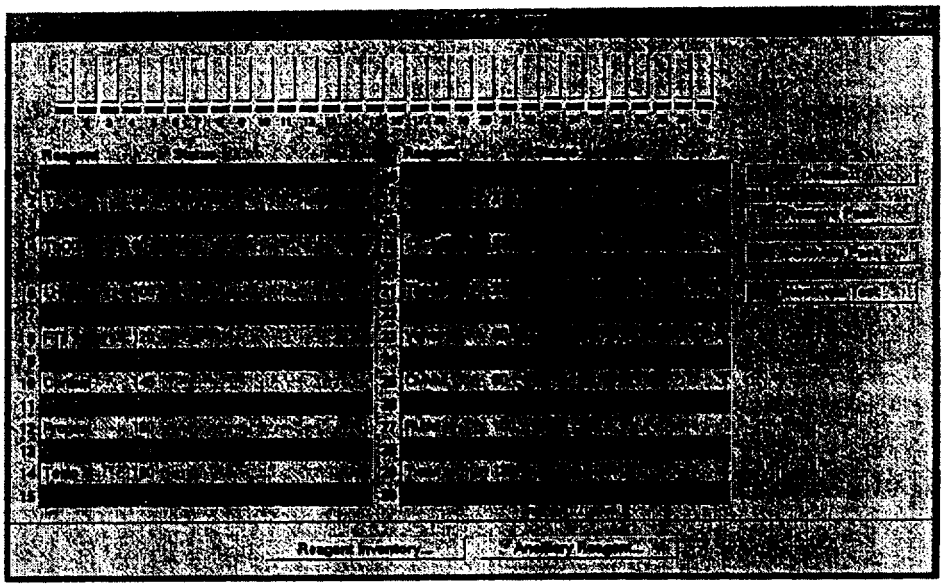

2. Review the reagent status and perform tasks as needed:
   - red indicates that the reagent requires immediate attention
   - yellow indicates that the reagent is currently sufficient but will need attention soon

? 3. You can select the online information button or refer to *Adding Primary Reagent Packs*, page 4-14, for detailed procedures.

120

90 121

Adding Primary Reagent Packs

1. At the workspace, select **Reagent Status**.

   NOTE: If the Status–Ancillary Reagents window appears, select **Primary Reagent** to display the status of the primary reagent packs.

2. Review the status of each reagent pack.
3. Open the primary reagent door.
4. If no position is open, or if the LED for the pack that you want to remove is lit, remove a primary pack.

If the system is . . .	*Then . . .*
idle	remove the reagent pack.
operating	a. At the Status–Primary Reagent window, select the reagent pack. b. Select **Remove Pack.** c. Select **Complete** or select **Now.** d. When the status changes to Removable, remove the reagent pack.

5. Install the primary reagent packs.

   NOTE: For optimal throughput, install packs of similar types next to one another.

6. Close the primary reagent door.
7. You can schedule a calibration:
   a. At the Status–Primary Reagent window, select the reagent pack.
   b. Select **Schedule Cal.**

   The system automatically schedules a calibration.

Reviewing Ancillary Reagent Status

At the Status–Ancillary Reagent window you can perform the following activities:

- display the status of the ancillary reagent entry
- access the Status–Ancillary Pack Details window, which shows the reagent, volume, and status associated with an ancillary reagent
- access the Status–Reagent Inventory window and the Status–Primary Reagent window
- remove an ancillary pack from the system

1. At the workspace, select **Reagent Status**.

127

91

2. Select **Ancillary Reagents.**

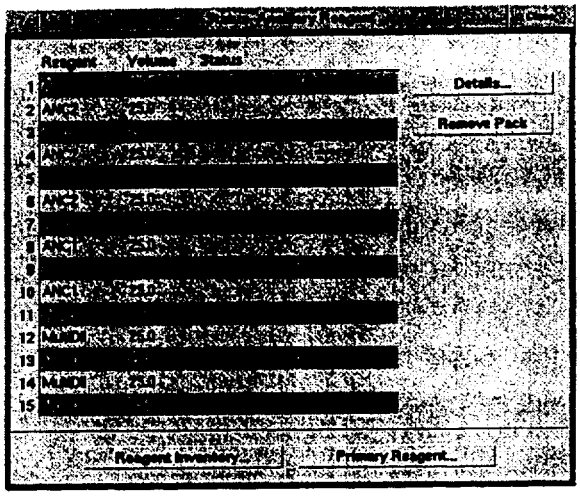

3. Review the reagent status and perform tasks as needed:
   - red indicates that the reagent requires immediate attention
   - yellow indicates that the reagent is currently sufficient but will need attention soon

? 4. You can select the online information button or refer to *Adding Ancillary Reagent Packs*, page 4-15, for detailed procedures.

Adding Ancillary Reagent Packs

1. At the workspace, select **Reagent Status.**
2. If the Status–Primary Reagent window opens, select **Ancillary Reagent.**
3. Determine if you need to replace a pack.
4. If no position is open, remove a pack:
   a. Select a pack.
   b. Select **Remove Pack.**
   c. If prompted, select **Complete** or select **Now.**
   d. Remove the pack from the ancillary reagent entry.
5. Install the appropriate pack in the ancillary reagent entry.

122

Replenishing Supplies

Reviewing Supplies Status

The background of the Supplies status button changes color to indicate the status of system supplies:

- yellow indicates that a supply requires attention
- red indicates that a supply is empty

You can select the Supplies button from the workspace to display the Status–Supplies window.

1. At the workspace, select **Supplies Status**.

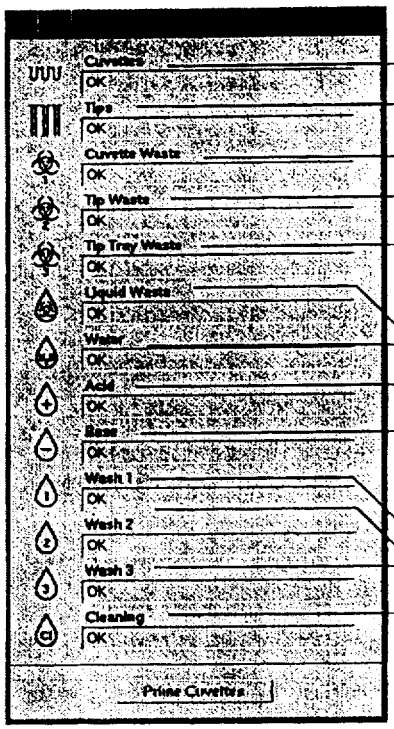

2. Review the supplies status:
   - yellow indicates that a supply requires attention
   - red indicates that a supply is empty
3. Visually inspect the levels of cuvettes, sample tips, and water. and
4. Empty the cuvette waste, the tip waste, and the liquid waste containers.
5. ? You can select the online information button or refer to Section 7, *Maintenance*, for detailed procedures.

123

93

Preparing the Water and Waste Bottles

Use this procedure to fill the water bottle and empty the waste bottle. You can perform this procedure while the system is analyzing samples.

BIOHAZARD: Refer to Appendix A, *Protecting Yourself from Biohazards*, for recommended precautions when working with biohazardous materials.

NOTE: For optimum system performance use fresh reagent water. Refer to Appendix E, *Reagents and Water Quality*.

1. Remove the water bottle:
   a. Pull out the waste and water drawer.
   b. Lift the lid above the water bottle.
   c. Disconnect the tubing from the top of the water bottle.
   d. Grasp the handle of the bottle and lift it up and out.

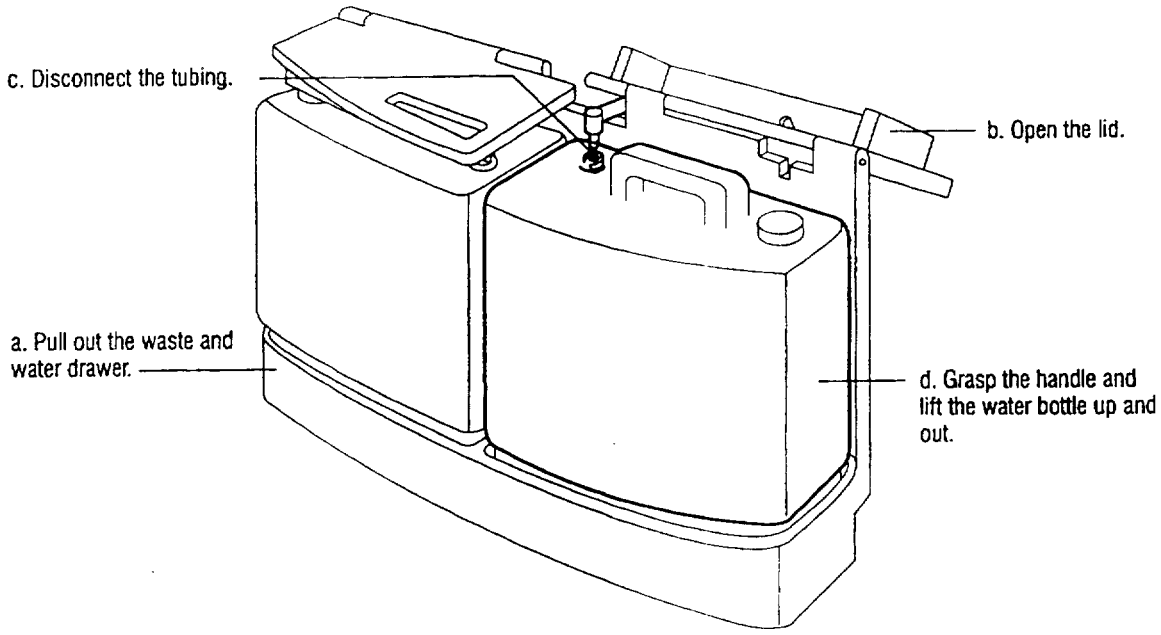

2. Prepare to clean the water bottle:
   a. Remove the cap from the top of the water bottle.
   b. Empty any remaining water from the water bottle.
   c. Clean the water bottle as described in *Cleaning the Water Bottle* in Section 7.
3. Fill a clean, dry water bottle with fresh reagent water.
4. Install the cap.
5. Install the water bottle on the system:

124

a. Return the bottle to the drawer.

b. Connect the tubing to the bottle.

c. Lower the lid.

6. Remove the waste bottle:

a. Lift the waste bottle lid.

CAUTION: To prevent dripping of biohazardous waste into the system, set the tubing on tissues or gauze.

b. Disconnect the tubing from the top of the waste bottle and then set it aside on tissues or gauze.

CAUTION: Handle the sensors gently because they are fragile.

c. Move the S clamp on the sensor aside, carefully remove the sensor from the bottle, and then set it aside on tissues or gauze.

Remove the waste bottle slowly to prevent splashing.

d. Grasp the handle of the bottle and lift it up and out.

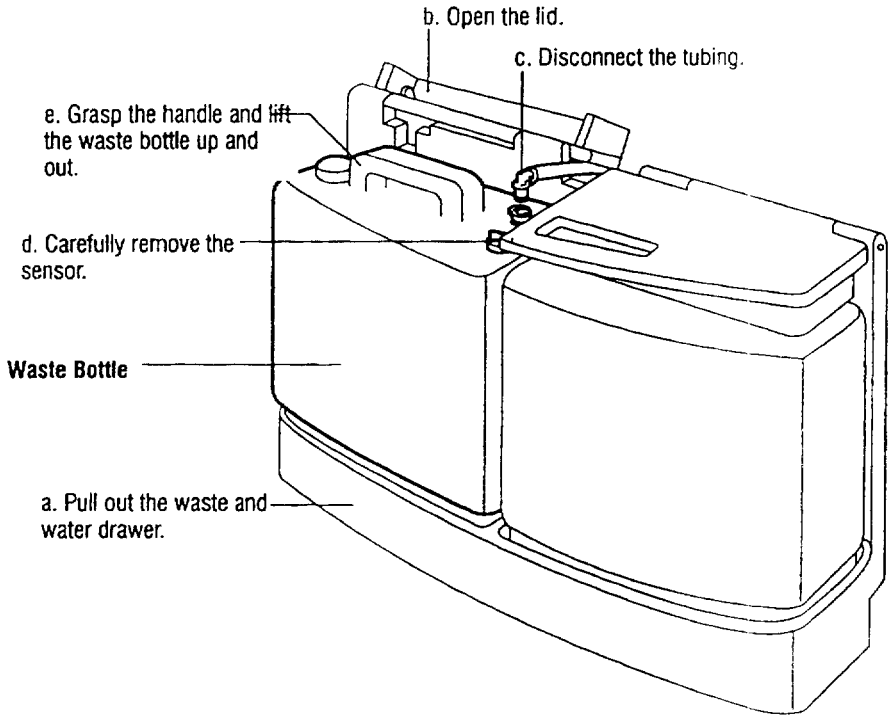

7. Empty the contents of the waste bottle into a container or drain approved for biohazardous waste disposal.

CAUTION: To prevent splashing of biohazardous waste, use the waste bottle valve to empty the contents of the waste bottle. Do not pour the contents from the top of the bottle.

125

8. If required, clean the waste bottle as described in *Monthly Cleaning Procedure* in Section 7.

CAUTION: To prevent a spill in the waste and water drawer, ensure that the waste bottle valve is fully closed by turning it to the left.

9. Install the waste bottle on the system:
   a. Close the waste bottle valve.
   b. Install the waste bottle in the drawer.
10. Clean the waste bottle main sensor.

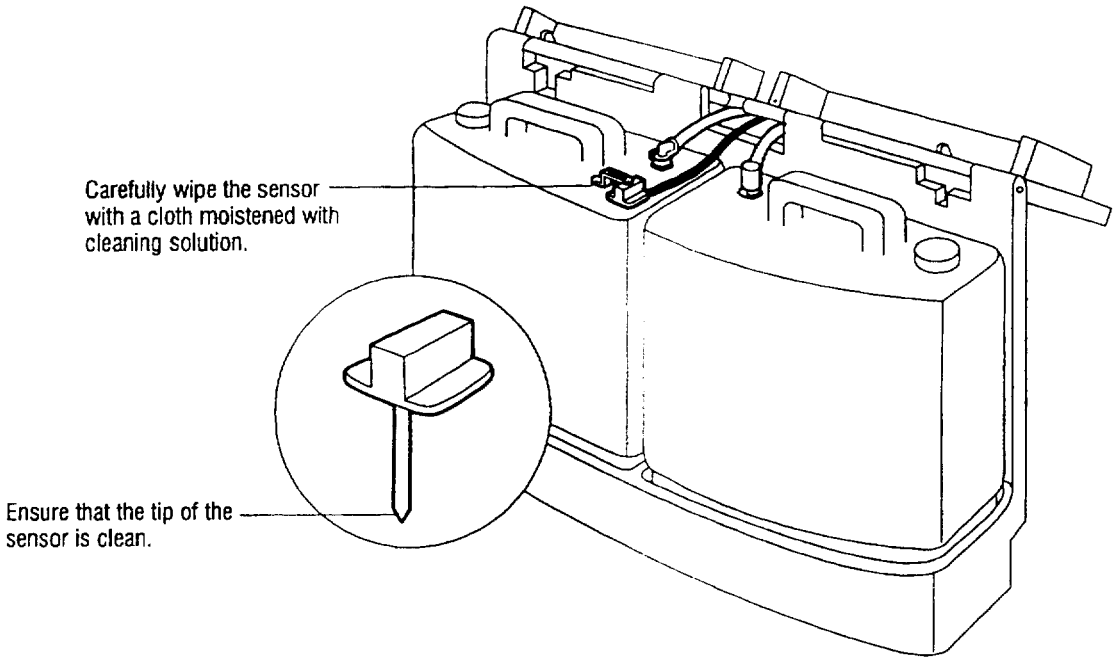

11. Carefully install the sensor in the waste bottle, and move the S clamp to cover the sensor.
12. Connect the tubing to the waste bottle.
13. Lower the lid.
14. Push in the waste and water drawer.

Adding Cuvettes

You can fill the cuvette loading bin at any time, even while the system is analyzing samples.

126

96

1. Open the cover.

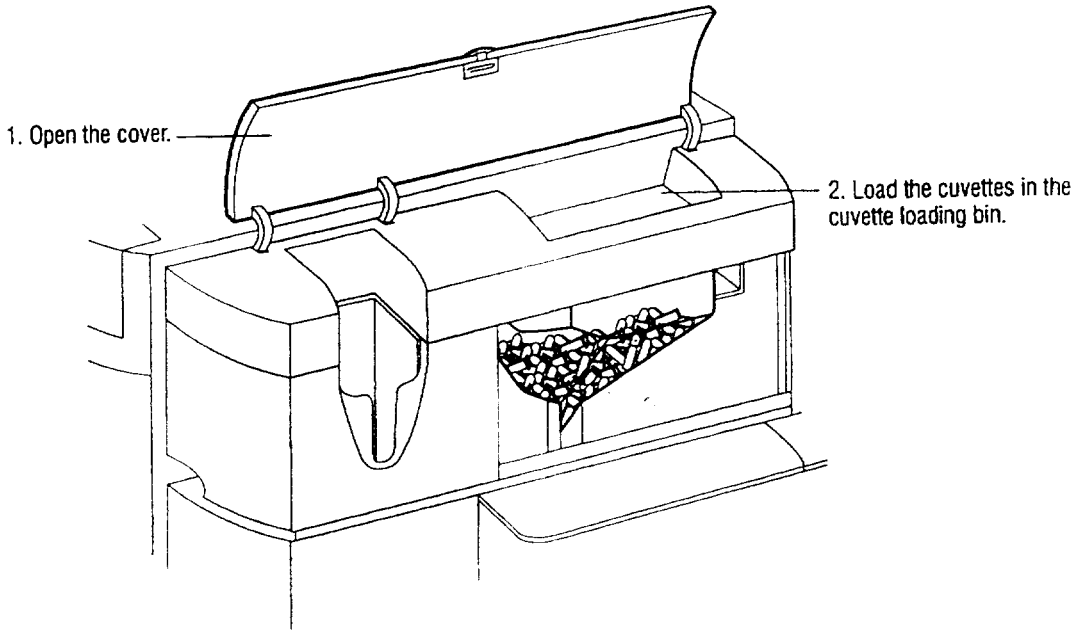

2. Load the cuvettes in the cuvette loading bin.

   You can load up to 4 bags of 250 cuvettes each. Avoid overfilling the cuvette loading bin.

3. Close the cover.

Adding Sample Tips

You can load sample tips at any time, even while the system is analyzing samples.

1. Open the cover.

127

2. Remove the protective cover from the bottom of the bundle.

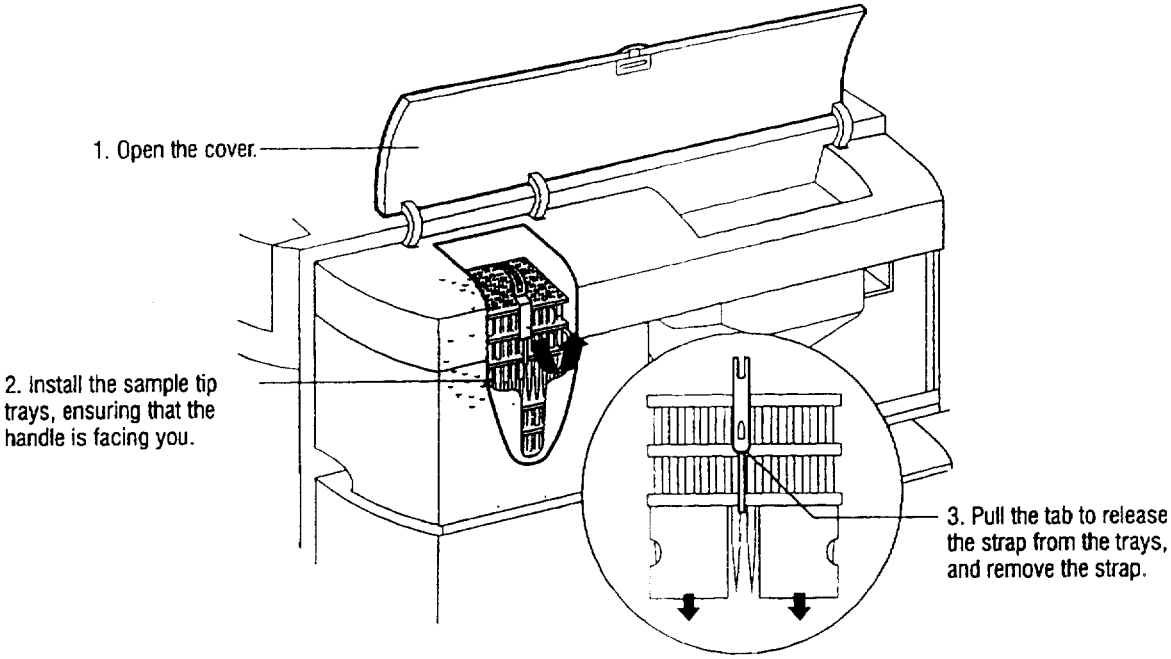

3. Install a bundle of sample tip trays, ensuring that the handle is facing you.
4. Pull the tab to release the strap from the trays, and remove the strap.
5. Close the cover.

Emptying the Waste Bins

You can empty the bins while the system is analyzing samples. Cuvettes and sample tips are collected in reservoirs while the bins are out of the system. The maximum capacity of the reservoirs is 20 cuvettes or tips, or approximately five minutes of operation.

BIOHAZARD: Refer to Appendix A, *Protecting Yourself from Biohazards*, for recommended precautions when working with biohazardous materials.

NOTE: The waste bins and liners are not identical. Ensure that the sample tip waste bin and liner are installed in the sample tip waste area. Ensure that the cuvette waste bin and liner are installed in the cuvette waste area.

1. Remove the sample tip waste bin:
   a. Open the right waste door.
   b. Grasp the handle of the sample tip waste bin and pull the bin out of the system.

128

2. Dispose of the contents of the bin in a container approved for biohazardous waste.
3. If the liner is dirty or damaged, remove the old liner and install a new liner.
4. If the bin is dirty, clean it:
   a. Pour a small amount of cleaning solution into the bin and swirl the solution inside the bin several times.
   b. Empty the waste bin into a container or drain approved for biohazardous waste.
   c. Repeat steps a and b.
   d. Rinse the inside and the outside of the bin with water.
   e. Dry the bin.
   f. Install the liner.
5. Install the waste bin, ensuring that the bin is pushed in completely.
6. Close the right waste door.
7. Remove the cuvette waste bin:
   a. Open the left waste door.

b. Grasp the handle of the cuvette waste bin and pull the bin out of the system.

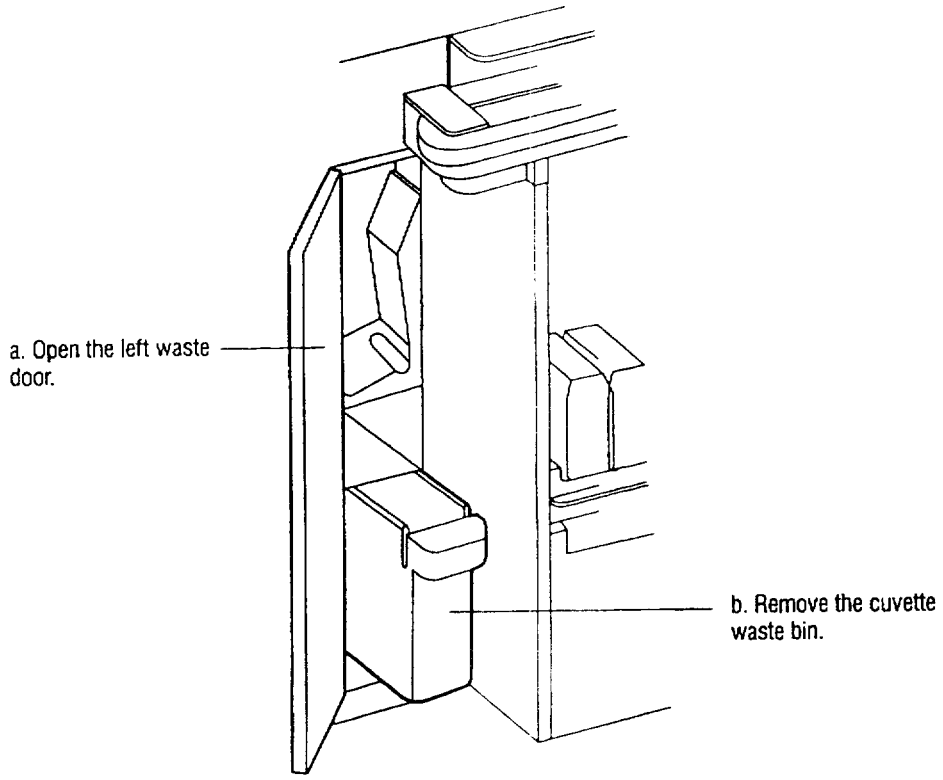

8. Dispose of the contents of the bin in a container approved for biohazardous waste.
9. If the liner is dirty or damaged, remove the old liner and install a new liner.
10. If the bin is dirty, clean it:
    a. Pour a small amount of cleaning solution into the bin and swirl the solution inside the bin several times.
    b. Empty the waste bin into a container or drain approved for biohazardous waste.
    c. Repeat steps a and b.
    d. Rinse the inside and the outside of the bin with water.
    e. Dry the bin.
    f. Install the liner.
11. Install the cuvette waste bin, ensuring that the bin is pushed in completely.
12. Close the left waste door.

130

Replacing the System Fluids

Use this procedure to replace acid reagent, base reagent, and wash 1, 2, and 3 after one month on the system, after expiration, or when they have insufficient volume. You can replace the system fluids while the system is analyzing samples. The system fluid reservoirs hold enough fluid to allow the system to continue to run for approximately 30 minutes.

NOTE: To manage lot numbers and to obtain optimum reagent performance, replace acid and base reagents at the same time.

1. Pull out the system fluid drawer.
2. Lift the lid for a system fluid bottle at the front edge.

CAUTION: Do not touch the tubing or allow it to touch the bottom of the drawer.

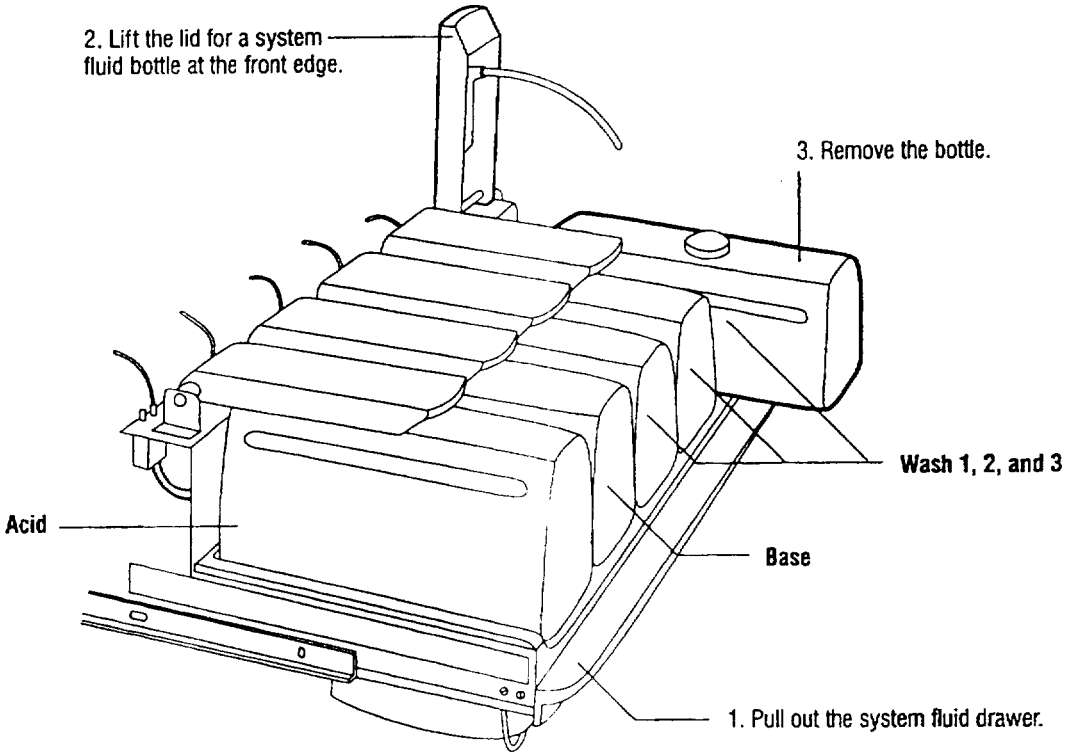

3. Remove the bottle and discard the fluid in an approved fluid waste container and the bottle in an approved solid waste container.

   NOTE: Do not pool any fluid from used bottles.
4. Write today's date in the space provided on the bottle.
5. Place the bottle in the drawer and remove the cap.

   Do not dislodge the tubing.

137

6. Wipe the tubing with lint-free tissues or gauze.
7. Lower the lid onto the bottle, ensuring that the tubing is in the bottle.
8. Repeat steps 2 through 7 for each bottle.

   NOTE: Ensure that the lid fits correctly on the bottle. If not, ensure that the system fluid bottle is in the correct location for the system fluid.
9. Push in the system fluid drawer.

132

Reviewing Inprocess Samples

Inprocess sample status shows the status of samples in the inprocess queue or in the incubation ring.

The background of the Inprocess Samples Status button changes to yellow when a sample does not have a barcode or an SID, or when there is insufficient sample. Pressing the Sample Status button displays the Status–Samples window. The sample causing the warning or error condition appears in the table on the window.

At the Status–Samples window you can perform the following activities:

- view all samples, exceptions, calibrators, status controls, or aspirated samples
- sort samples by time, rack, SID, status errors, or scanned date
- search for an SID
- search for rack
- review the status of the samples in the exit queue
- request to remove a rack from the system
- access the Demographics window, Schedule window, and Worklist Summary window

Use this procedure to review the status of the inprocess samples while the system processes the worklist.

NOTE: You can add or delete the tests and profiles for samples after the first sample in the rack has entered the inprocess queue and until the system aspirates the sample. However, you cannot edit a batch after the first sample in the batch has entered the inprocess queue.

133

1. At the workspace, select **Inprocess Samples Status.**

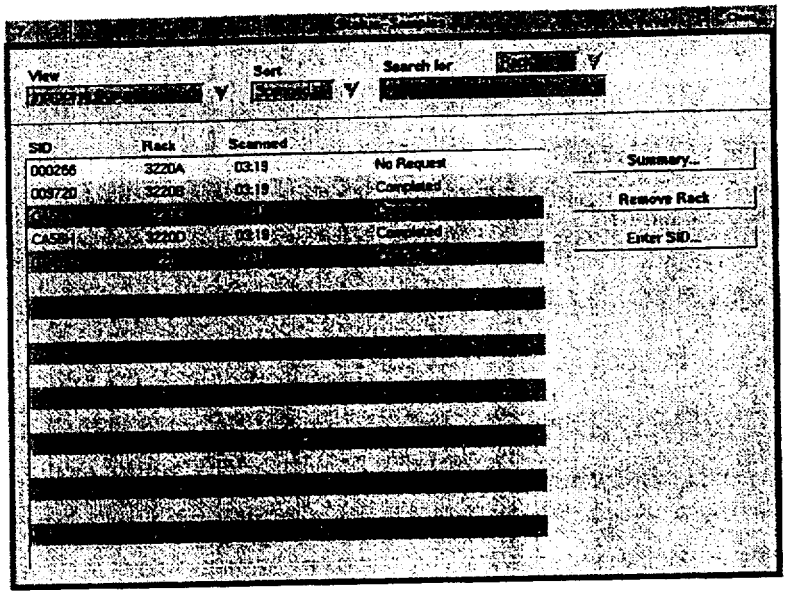

2. Review the status of the inprocess samples.
3. You can edit a test request:
   a. Select the sample for the request you want to edit.
   b. Select **Summary.**
   c. Select a sample or a test.
   d. Select:
      - **Delete** to delete it from the worklist, and then select **Yes.**
      - **Schedule** to add it to the worklist, and then select **Save.**
4. You can edit patient demographics:
   a. Select the sample.
   b. Select **Summary.**
   c. Select **Schedule.**
   d. Select **Demographics.**
   e. Edit the demographic information, as described in *Entering Patient Demographics*, page 4-30.
   f. You can select **Comments** to enter up to three sample comments, and then select **Save.**
   g. Select **Save** at the Worklist–Demographics window.

Modifying the Worklist

You can modify the worklist:

- Reviewing the Worklist Summary
- Querying an LIS
- Adding patient requests
- Entering patient demographics
- Adding Stat requests
- Adding batch requests
- Adding calibrator requests
- Adding control requests
- Entering dilution options
- Entering reagent options
- Editing requests
- Editing batch requests
- Deleting requests

Reviewing the Worklist Summary

Use the Worklist–Summary window as the primary window to operate the system.

You can locate specific information by selecting the appropriate View and Sort:

- The View that you select controls the results that the system displays. For example, if you select Calibrators, the system displays the calibration results. If you select All, the system displays all results.
- The Sort that you select controls the order in which the system displays results. For example, if you select SID, the system sorts and displays the results in ascending SID order.

You can perform the following tasks at Worklist Summary by selecting the View, the Sort, and the specified titlc for the third column:

Task	View	Sort	Third Column
Checking the time that a sample result will be available	Pending Tests	Scanned	Time Due
Reviewing sample results	Current Results	SID	Conc
Reviewing infectious disease sample results	Current Results	SID	Index

135

1 UP

Checking QC results	Controls	SID	Conc
Checking calibrator results	Calibrators	SID	Conc
Checking Stat sample results	Stat	SID	Conc
Assigning a calibration	Stored RLU		
Reviewing sample results when all tests are completed	Historical		

Querying an LIS

Use this procedure to schedule the worklist if your system is set up for manually-initiated queries.

1. At the workspace, select **Worklist**.
2. Select **Summary**.
3. Select **LIS Communications**.
4. Select **Receive Requests from LIS**.
5. You can specify a starting date and an ending date.
6. Select **Continue**.

Adding Patient Requests

1. At the workspace, select **Worklist**.
2. Select **Schedule**.

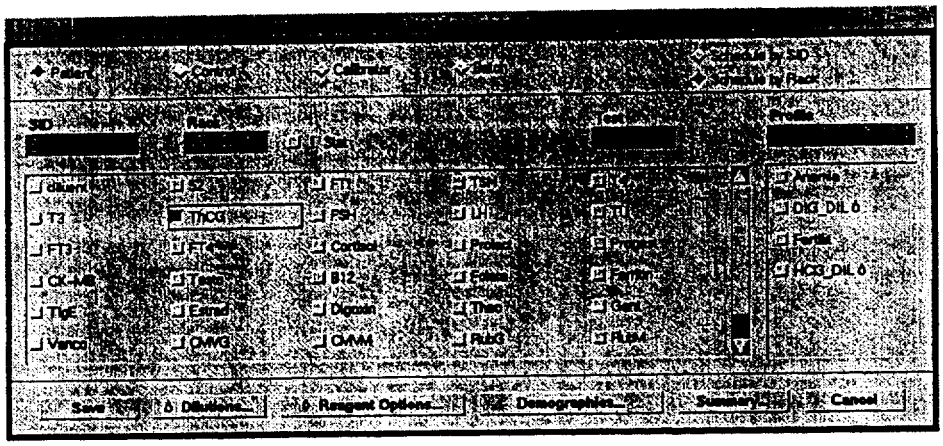

3. Specify either **SID** or **Rack**,if required.
4. Select **Stat** to run the sample before other tests, if appropriate.
5. Enter or select the profiles or the tests.

136

6. You can select the following options:
   - You can select **Dilutions** and then specify dilution information, as described in *Entering Dilution Options*, page 4-34.
   - You can select **Reagent Options** and then specify a specific reagent lot or pack as described in *Entering Reagent Options*, page 4-35.
   - You can select **Demographics** and then enter demographic information, as described in *Entering Patient Demographics*, page 4-30.
7. Select **Save**.

Entering Patient Demographics

Use this procedure to enter patient demographic information. Entering patient demographic information is optional. You can enter patient demographic information at the following times:

- as you schedule samples in the worklist
- after you create the worklist
- while tests are running

1. At the Worklist–Schedule window, schedule the sample, if required.
2. Select **Demographics**.
3. Enter the demographic information.

   The information appears in the demographic fields on the window and on collated patient reports.

Field Name	*Description*
SID	Sample identifier. You can enter up to 13 alphanumeric characters.
Rack	Rack identifier. You can enter up to 5 alphanumeric characters.
PID	Patient identifier. You can enter up to 13 alphanumeric characters.
Name	Patient's name. You can enter up to 19 alphanumeric characters.
DOB	Patient's date of birth. Use the dd mmm yyyy format (for example: 11 Aug 1975). Use the following abbreviations for months: Jan, Feb, Mar, Apr, May, Jun, Jul, Aug, Sep, Oct, Nov, Dec.
M or F	Patient's gender. You can select M (male) or F (female).

137

101

Field Name	Description
Location	Location of patient in the facility. You can enter up to 10 alphanumeric characters.
Physician	Physician's name. You can enter up to 12 alphanumeric characters.

4. You can select **Comments** to enter up to three comments and then select **Save.**

NOTE: If you finish your changes to the demographics and you change the Rack ID before you save your changes, then as soon as you press **Enter,** the system asks if you want to save the changes you made for the previous Rack ID.

5. Select **Save** at the Worklist–Demographics window.
6. If you are entering new demographic data, select **Save** at the Worklist–Schedule window.

Adding Stat Requests

Schedule a sample as a Stat to run the sample before other tests on the worklist.

1. At the workspace, select **Worklist.**
2. Select **Schedule.**
3. Specify either **SID** or **Rack** if required.
4. Select **Stat.**
5. Enter or select the appropriate profiles or tests.
6. You can select the following options:
   a. You can select **Dilutions** and then specify dilution information, as described in *Entering Dilution Options*, page 4-34.
   b. You can select **Reagent Options** and then specify a specific reagent lot or pack as described in *Entering Reagent Options*, page 4-35.
   c. You can select **Demographics** and then enter demographic information, as described in *Entering Patient Demographics*, page 4-30.
7. Select **Save.**

Adding Batch Requests

Use this procedure to schedule a batch of patient samples that require the same tests.

1. At the workspace, select **Worklist.**
2. Select **Schedule.**

3. Select **Batch.**

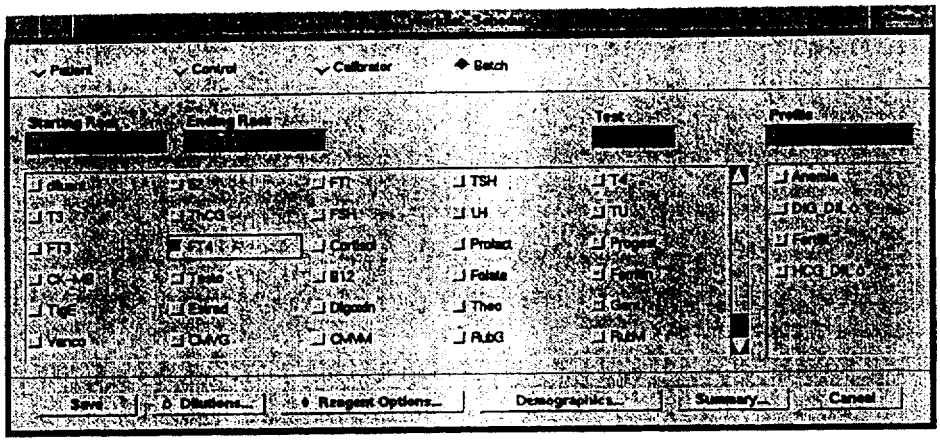

4. Enter the number and position of the starting rack in **Starting Rack.**

   Rack numbers contain a four-digit rack identifier followed by a letter from A to E, which indicates the sample position in the rack.

5. Enter the number and position of the ending rack in **Ending Rack.**
6. Enter or select the appropriate profiles or tests.
7. Select **Save.**

   The system performs the requested tests on all samples loaded between the starting rack and the ending rack. You can load the racks in any order.

Adding Calibrator Requests

1. Determine which tests require a calibration:
   a. At the workspace, select **Calibration.**
   b. Select **Summary.**
   c. Select **Status** in Sort.
   d. Review the calibration status and due dates.
2. At the workspace, select **Worklist.**
3. Select **Schedule.**

139

4. Select **Calibrator.**

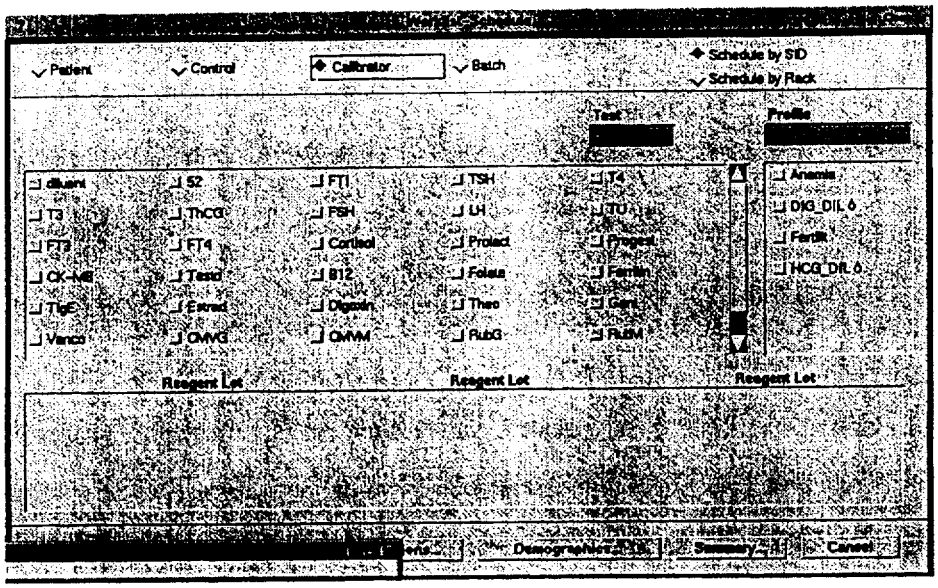

5. Enter or select the appropriate profiles or tests.
6. Select one or more calibrator names from the list. You can schedule multiple calibrators at one time.
7. You can accept the default lot or select a lot from the list.

   The system displays the assigned SIDs for the low and high calibrators.
8. You can specify the **Rack** for the low and high calibrators.

   If you do not specify the Rack, the system assigns the Rack when you load the calibrators.
9. You can specify reagent options if appropriate.
10. Select **Save.**

Adding Control Requests

To monitor system performance and chart trends, Chiron Diagnostics recommends that you run a minimum of three levels of QC material at least once during each 8 or 24 hour shift, depending on the assay. If your established QC program requires more frequent use of controls, then follow those procedures. Refer to the assay product inserts for specific QC recommendations for each assay.

1. At the workspace, select **Worklist**.
2. Select **Schedule.**

140

140

3. Select **Control**.

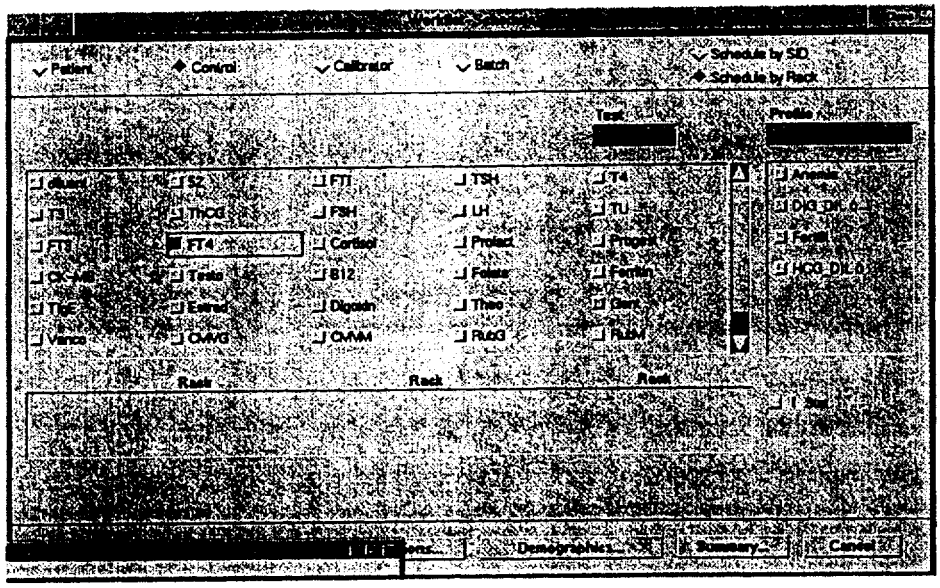

4. Enter or select the appropriate profiles or tests.
5. Select a control lot and SID.
6. You can select the following options:
   a. You can select **Stat**.
   b. You can specify the **Rack**.
   c. You can select **Dilutions** and then specify dilution information as described in *Entering Dilution Options*, page 4-34.
   d. You can select **Reagent Options** and then specify a specific reagent lot or pack as described in *Entering Reagent Options*, page 4-35.
7. Select **Save**.

Entering Dilution Options

Use this procedure to enter the dilution information for samples on the worklist.

1. At the Worklist–Schedule window, schedule the sample, if required.

147

2. Select **Dilutions.**

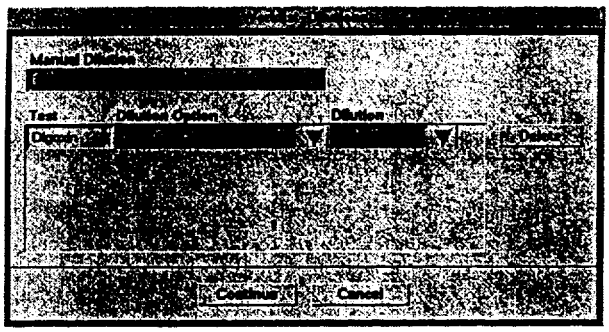

3. If you diluted the sample before placing it in the rack, enter the dilution factor in **Manual Dilution.**
4. If you want the system to dilute the sample, select a dilution option:
   - Undiluted Only if the sample does not require dilution
   - Diluted Only if you are certain that the sample requires dilution
   - Undiluted & Diluted if you do not know whether the sample requires dilution
   - Dilute If Over (performs test on undiluted sample first) if the sample may require dilution above a value
5. Select a dilution factor in **Dilution.**
6. Select **Continue.**
7. Select **Save** at the Worklist–Schedule window.

Entering Reagent Options

1. At the Worklist–Schedule window, schedule the sample, if required.
2. Select **Reagent Options.**
3. For each test that requires specific reagents, you can select the reagent options:
   a. Select a Lot.
   b. Select a Pack ID.
   c. Select an ancillary reagent lot.
   d. If appropriate, select a second ancillary reagent lot.
   e. Select a Diluent.
   f. Enter the number of Replicates.
4. Select **Continue.**
5. Select **Save** at the Worklist–Schedule window.

143

Editing Requests

1. At the workspace, select **Worklist**.
2. Select **Summary**.

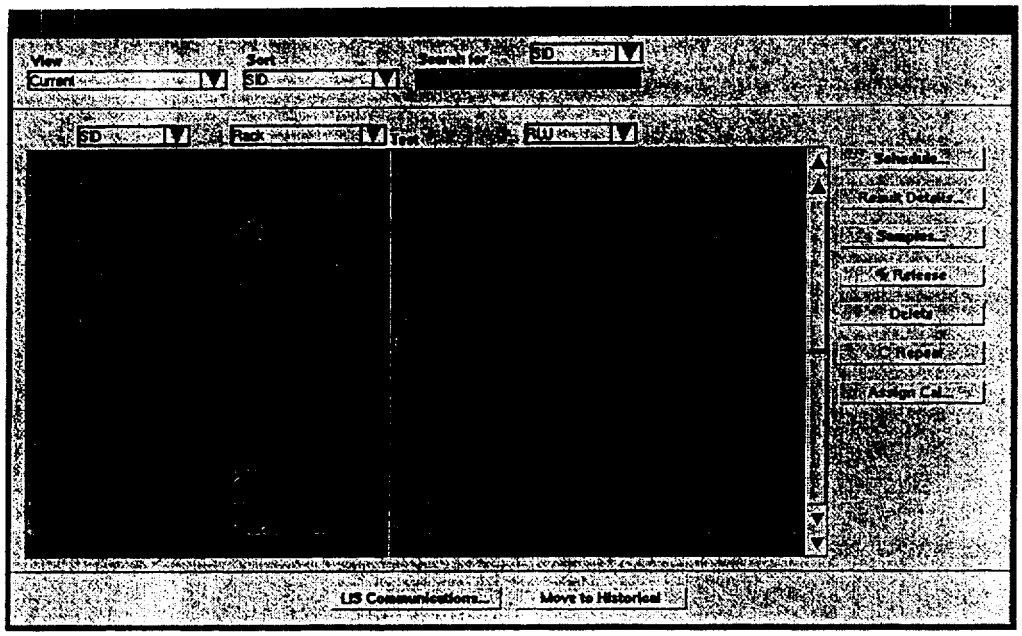

3. Select a sample or a test.
4. Select:
   - **Delete** to delete the sample from the worklist or to delete an individual test, select the option you want, and then select **Yes**.
   - **Schedule** to add or delete tests, modify dilutions, specify reagent lots or packs, or modify demographics, and then select **Save**.

Editing Batch Requests

NOTE: You cannot edit a batch after the first sample in the batch has entered the inprocess queue.

1. At the workspace, select **Worklist**.
2. Select **Summary**.
3. Select **Pending Batches** in View.
4. Select a batch.
5. Select **Schedule**.

143

6. Select:
   - **Delete** to delete it from the worklist, and then select **Yes**.
   - **Schedule** to add it to the worklist, and then select **Save**.

   NOTE: The new test request overrides the existing test request.

Deleting Requests

1. At the workspace, select **Worklist**.
2. Select **Summary**.
3. Select a sample or a test.
4. Select **Delete**.
5. Select **Yes**.

144

Evaluating the Results

Use this section to evaluate and manage the results:

- review the results
- edit the results
- send the results to an LIS
- print the results

Reviewing Results

Use this procedure to review the results for controls and patients.

1. At the workspace, select **Worklist**.
2. Select **Summary**.
3. You can search for the sample:
   a. Select **SID** in **Search for**.
   b. Enter the SID in **Search for SID**.
4. Review the results.
5. You can display the result details:
   a. Select the result.
   b. Select **Result Details**.
6. You can review historical results:
   a. At the workspace, select **Historical Results**.
   b. Review the results.

Repeating a Test

The following table lists the conditions under which the system repeats samples and adds remarks. Refer to *Defining Repeats* in Section 9 for more information about setting up sample repeats.

If the result is . . .	*Then the system . . .*
below the lowest Master Curve point	repeats the sample if a below check range limit is defined for the test.
below the check range	repeats the sample if a below check range limit is defined for the test and adds a flag to the result.
above the normal range	does not repeat the sample, but adds a flag to the result.
below the normal range	does not repeat the sample, but adds a flag to the result.
not calculated due to noise, poor signal, floating point error, or invalid dark count	repeats the sample and adds a flag to the result.

1. At the Worklist–Summary window, select a sample on the left side of the worklist or a test on the right side of the worklist.
2. Select **Repeat**.

Editing Results

1. At the workspace, select **Worklist**.
2. Select **Summary**.
3. You can search for a sample:
   a. Select **SID** in **Search for**.
   b. Enter an SID in **Search for SID**.
4. Select a sample.
5. Select **Result Details**.
6. Select a test.
7. Select **Edit Result**.
8. Select **Delete Result**.
9. Select **Yes**.
10. Select **Save**.

140

146

Sending Results to an LIS

Use this procedure to manually send results to an LIS if automatic transfer of results is not defined for your system.

1. At the workspace, select **Worklist**.
2. Select **Summary**.
3. Select **LIS Communications**.
4. Select **Send All Results Except Results On Hold**.
5. You can enter a starting date and an ending date.
6. Select **Continue**.

   The system sends to the LIS all results that match the criteria.

Printing Sample Results

If your system has a printer, you can print collated patient sample reports with a report heading that identifies your hospital or laboratory.

1. At the workspace, select **Worklist**.
2. Select **Summary**.
3. Select the appropriate sample and report.

If you want to . . .	*Then . . .*
print a report for a sample	select a sample.
print a list of pending tests for scheduled samples	a. Select **View**. b. Select **Pending Tests**.
print a historical results report for a sample	a. Select **Historical**. b. Select a sample.
search for a sample and then print a report	a. Select **SID** in **Search for**. b. Enter the SID in **Search for SID**.
print reports for all samples on a rack	a. Select **Rack** in **Search for**. b. Enter the Rack in **Search for Rack**.

147

print the results for scheduled samples	a. Select **View**. b. Select **Results**.
print a report for all samples on the worklist	a. Select **View**. b. Select **All**.
print a report for all tests performed on a patient	a. Select **PID** in **Search for**. b. Enter the PID in **Search for PID**.

4. At the workspace, select **Print**.

Deleting Selected Sample Results

CAUTION: When you delete results, the system permanently removes the results from the database. Refer to *Archiving Results*, page 4-43, to copy the results to diskettes before deleting them from the database.

1. At the workspace, select **Setup**.
2. Select **Data Administration**.
3. Select **Delete**.
   The Setup–Data Administration Options window opens.
4. Complete the appropriate tasks:

If you want to . . .	*Then . . .*
specify a starting date	enter a starting date in the dd mmm yy format.
specify an ending date	enter an ending date in the dd mmm yy format.
delete current results	select **Current** in Results.
delete current and historical results	select **Historical and Current** in Results.
delete historical results	select **Historical** in Results.
delete all results	select **All**
delete pending requests in the worklist	select **All Pending**.
delete results in the worklist	select **All Resulted**.

148

148

If you want to . . .	*Then . . .*
delete printed results	select **All Printed**.
delete results that were sent to the LIS	select **All Sent**.

5. Select **Continue**.
6. Select **Eject Diskette**.
7. Remove the diskette from the drive.

Deleting Worklist Results

CAUTION: When you delete results, the system permanently removes the results from the database. Refer to *Archiving Results*, page 4-43, to copy the results to diskettes before deleting them from the database.

1. At the workspace, select **Setup**.
2. Select **Data Administration**.
3. Select **Worklist**.
4. Select **Delete**.
5. Select **Yes** when prompted.

   The system deletes the results.

149

Maintaining Data Files

Use these procedures to maintain data files:

- archive results based on selected criteria
- retrieve archived results from a diskette and review them on the system

For optimum efficiency in locating results and managing patient data, Chiron Diagnostics recommends that you delete results from the database at regular intervals. If you want to keep copies of results, you can use the archiving options to copy the results to diskettes before deleting them from the database.

Archiving Results

Archiving is the process of organizing and storing the results on double-sided, high-density diskettes (1.44 megabytes).

1. At the workspace, select **Setup**.
2. Select **Data Administration.**
3. Select an area.
4. Select the results that you want to archive.

If you want to archive . . .	*Then select . . .*
all results except worklist results	All (Except Worklist).
worklist results	Worklist.
calibration data, QC data, and test definitions	either Quality Control, Calibration Data, or Test Definitions because they are backed up as a set.

5. Insert the diskette in the drive.

   NOTE: Formatting a diskette erases any existing data.
6. Select **Format Diskette** if the diskette is unformatted.

   The system formats the diskette, which takes a few minutes.
7. Select **Back Up.**
8. Select **Eject Diskette.**
9. Remove the diskette from the drive.

150

120

Restoring Archived Results

NOTE: You cannot edit archived results that are stored on diskettes.

1. At the workspace, select **Setup**.
2. Select **Data Administration.**
3. Insert the diskette containing the results you want to review in the diskette drive.
4. Select the archived results that you want to restore.

If you want to archive . . .	*Then select . . .*
all results except worklist results	All (Except Worklist).
calibration data, QC data, and test definitions	either Quality Control, Calibration Data, or Test Definitions because they are backed up as a set.

NOTE: You cannot perform any operations while the system is restoring results from a diskette.

5. Select **Restore.**
6. Select **Eject Diskette.**
7. Remove the diskette from the drive.

151

121

5 Calibration

Quantitative Assays **5-3**
Principle 5-3
Establishing a Master Curve 5-3
Two-Point Calibration 5-5
Calibration Evaluation Ranges 5-6
What Are Calibration Evaluation Ranges (CERs)? 5-6
Why Use CERs? 5-6
Objectives of the Calibration Process 5-6
How Does CER Work? 5-7
Reference Serum Calibration for T Uptake 5-8

Qualitative Assays **5-9**
Principle 5-9
Calculating a Cutoff Point 5-9
Establishing a Master Curve 5-10
Two-Point Calibration 5-10
Calculating the Result 5-11

Defining Calibration **5-12**
Defining a Master Curve 5-12
Defining Calibrator Assigned Values 5-13

Performing Calibrations **5-15**
Verifying Calibration Status and Due Dates 5-15
Scheduling Calibrators 5-16
Reviewing Calibration Data 5-17
Reviewing Historical Calibration Data 5-18
Excluding a Calibration Result 5-19
Waiving an Expired Calibration 5-20
Accepting an Invalid Calibration 5-20
Printing Calibration Data 5-20

157

153

L23 - 154

Quantitative Assays

This section describes the calibration methods that the ACS:Centaur system uses to calibrate the quantitative assays:

- Master Curve and two-point calibration system for quantitative (competitive and sandwich binding) assays
- reference serum calibration (ACS T Uptake assay)

Calibration of the system minimizes variation:

- between lots
- between systems

Principle

The ACS:Centaur system uses a Master Curve and a two-point, user-initiated calibration to calibrate quantitative ACS assays. The Master Curve and the two-point calibration method eliminate the need to measure a full standard curve or to include calibration with each assay. The system stores the calibration for the interval specified in the assay product inserts. You do not need to calibrate an assay until:

- the calibration interval expires
- you use a new lot of assay reagents or calibrators
- your controls are out of range

Establishing a Master Curve

Before releasing a new lot of reagents, full standard curves are performed for each assay on multiple systems over several days. The analyte concentration and RLU pairs define the shape of the Master Curve for a particular lot of assay reagents.

154

Each ACS assay kit includes a Master Curve card that lists the analyte concentration and relative light units (RLUs) for each Master Curve point.

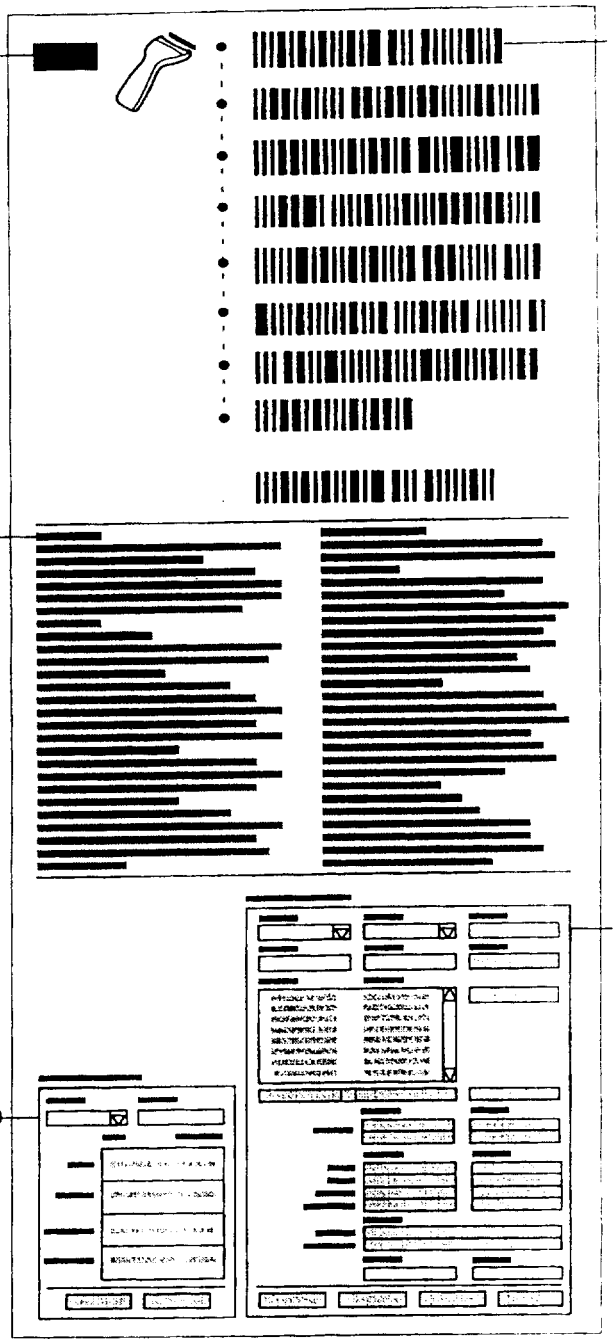

1. Scan these barcodes with the scanner.

2. If the barcodes do not scan correctly, you can use the keyboard to enter the Master Curve definition at the Master Curve Definition window. The information on the Master Curve card is specific for the reagent lot.

3. Some assays require information at the Lot Details window.

155

125

The Master Curve for a competitive binding assay has a negative slope, which indicates that the analyte concentration is inversely proportional to the measured RLUs.

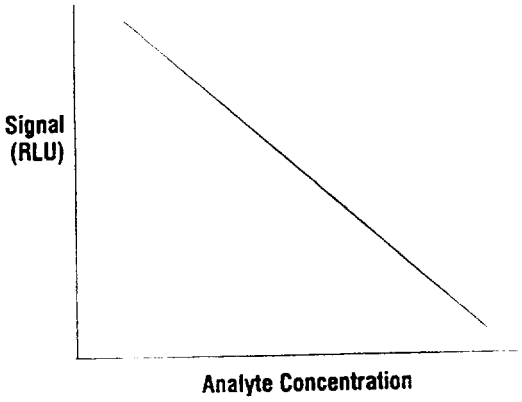

The Master Curve for a sandwich assay has a positive slope, which indicates that the analyte concentration is directly proportional to the measured RLUs.

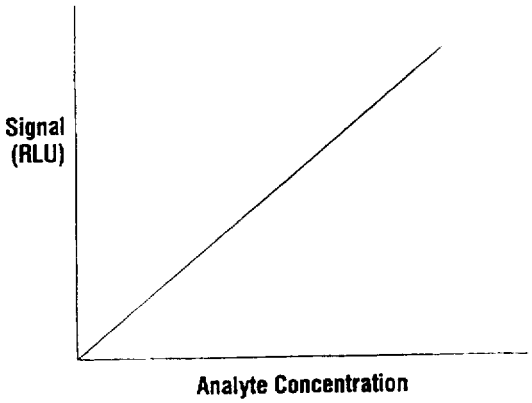

Two-Point Calibration

Each ACS calibrator kit includes a Calibrator Assigned Value card that provides the calibrator values for each analyte in the low and high calibrators.

These calibrators may produce different RLU values on different systems due to system-to-system variability, particularly due to the sensitivity of the photomultiplier tube (PMT). The Master Curve is validated on your system by assaying the high and low calibrators for two known analyte concentrations. Your system determines the mathematical relationship between the calibrator RLUs that your system measured and the RLUs you entered from the Master Curve card, and then converts the RLUs to Master Curve RLUs.

156

126

When a patient sample is assayed, the system measures the RLU value and then converts it to a Master Curve RLU value. The Master Curve RLU value is matched to its corresponding analyte concentration using the Master Curve. The analyte concentration is then recorded as the patient sample result.

Calibration Evaluation Ranges

What Are Calibration Evaluation Ranges (CERs)?

CERs are metrics that are based on high and low calibrator RLUs and the Master Curve. CERs are used to evaluate the integrity of a calibration.

Why Use CERs?

- CERs increase the confidence in the calibration data generated by the system.
- CERs provide information about the integrity of a calibration beyond the generated QC.
- CERs reduce the instances of borderline calibrations that might not hold for the specified calibration interval.
- CERs minimize lost assays due to controls drifting out of range. An optimized calibration decreases total % CVs.

Objectives of the Calibration Process

- To provide specific calibration acceptance criteria
- To evaluate calibrations on their own merit separate from evaluation of quality control material by checking the quality of a calibration at the time of calibration
- To preserve test results that follow a failed calibration
- To provide detailed information to troubleshoot a failed calibration
- To decrease the need for recalibrations and determine when recalibration is necessary
- To provide onboard historical calibration information
- To edit a replicate RLU of a particular calibration

157

Term	Definition
Slope and intercept	relate the signal of the calibrated system to the signal of the factory generated curve at the two calibrator values. The slope and intercept are used to adjust the signal intensity of the observed values to the Master Curve values. For example, if the slope equals two and the intercept is zero, then the Master Curve RLUs are approximately two times the ACS:Centaur system RLUs.
Ratio	compares the high calibrator signal in RLUs to the low calibrator signal in RLUs.
Low Cal deviation	measures how well the low calibrator maps onto the Master Curve.
High Cal deviation	measures how well the high calibrator maps onto the Master Curve.
Defined Ranges	are specified ranges for each assay that are defined by the manufacturer. CER values must fall within the defined ranges. The ranges are entered into the system from the Master Curve card.
Observed Ranges	compare CER values specific to a calibrator and reagent lot combination for an individual system. The ranges are established by the system after the lot information has been entered and four calibrations have been performed. The observed ranges are updated after each subsequent calibration.
Calibrator CV	or coefficient of variation is a measure of the precision of the low and high calibrator replicates and is calculated from the RLUs.

How Does CER Work?

1. The CER checks the RLU precision of low and high calibrator replicates (CV).
2. The CER checks the slope, ratio, and low and high calibrator deviations against a defined range for the specific assay.
3. The CER checks the slope, ratio, and low and high calibrator deviations against an observed range after the fourth calibration of a reagent lot and calibrator lot combination. The CER is calibrator and reagent lot specific.
4. The CER determines if renormalization of the current calibration is necessary.
   - If so, then a new slope and intercept are calculated.
   - If not, then the previous calibration expiration is extended using the same interval.

158

5. RLUs from an invalid calibration can be evaluated using the last valid calibration or the next valid calibration for that assay.

Reference Serum Calibration for T Uptake

The ACS T Uptake assay provides an indirect measure of the number of unoccupied binding sites on thyroxine-binding proteins in a patient sample. In this assay, a direct relationship exists between the RLUs detected by the system and the number of binding sites available on the thyroxine-binding proteins. This results in a higher T Uptake ratio when there are fewer free binding sites, and a lower ratio when there are more free binding sites.

A Master Curve is not necessary for the T Uptake assay because it is a ratio test. The T Uptake Master Curve card provides only lot and expiration date for the assay reagents. The T Uptake assay compares the control and patient sample uptake results with an euthyroid reference serum of known uptake. The T Uptake assay uses Low Calibrator A as follows:

$$\text{T Uptake ratio} = \frac{\text{ACS Calibrator A RLUs}}{\text{Unknown RLUs}} \times \text{reference serum factor}$$

The reference serum factor is printed on the Calibrator Assigned Value card provided with Calibrator A.

To report results as % T Uptake, the ACS:Centaur system requires a % T Uptake normal (reference) range. The system multiplies the T Uptake ratio by the midpoint of the % T Uptake normal range to obtain % T Uptake results.

Example

If the % T Uptake normal range is defined as 25 to 35% (midpoint of 30), and a patient sample has a T Uptake ratio of 0.82, the system calculates the % T Uptake as follows:

$$0.82 \times 30 = 24.6\%$$

The system reports 24.6% as the % T Uptake.

159

Qualitative Assays

Principle

Forward sandwich assays have a cutoff point that remains constant for each lot number of reagent. The cutoff point is defined by an index of 1.0 and the associated signal derived from the calibration curve.

1. Each kit lot number is calibrated and a Master Curve card is created.
2. The operator transfers the Master Curve from the Master Curve card to the system.
3. The operator runs the low and high calibrators to generate a correction formula for the specific system.
4. The system applies the correction formula to the observed signal for a sample and calculates the result.
5. The assay cutoff point is established using population studies.

Calculating a Cutoff Point

During product development, a cutoff point is established from extensive population studies. The analyte concentration associated with the cutoff point is assigned an index value of 1.0. A series of standards is characterized by comparing the standards' levels of reactivity to the cutoff point.

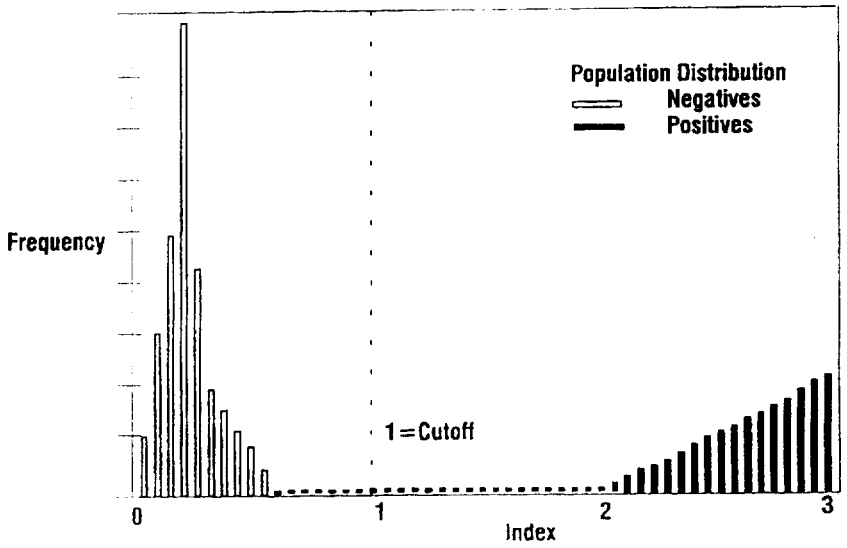

160

170 ~~101~~

Establishing a Master Curve

To generate a Master Curve, the standards of varying concentrations are run on multiple systems over several days. The resulting standard curve determines the relationship between the defined analyte levels and the measured signal using the reagents from the specific lot number. These values become the lot-specific Master Curve and are recorded as barcodes on the Master Curve card.

The operator scans the barcoded Master Curve values on the card into the system. The system then fits the values to a curve using a 4 Parameter Logistic (4PL) function. The 4PL function is used for qualitative assays because it best describes the typical antibody-antigen binding curve. For information on scanning the Master Curve Card, refer to *Defining a Master Curve*.

Two-Point Calibration

In order to calibrate a qualitative assay on the system, the operator runs two calibrators of known value in replicate. For information on analyzing the calibrators, refer to *Performing Calibrations*.

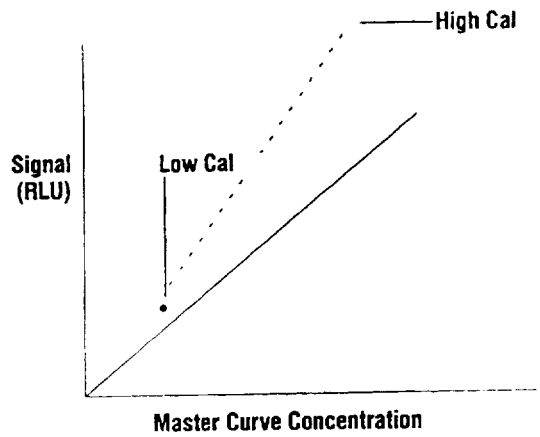

If the calibrators meet specific defined validity criteria, the system compares the measured signals for each calibrator to the Master Curve and determines a system-specific correction formula. This formula applies to the signal measured on all samples assayed on the system.

$$corrected\ signal = \frac{observed\ signal - defined\ intercept}{defined\ slope}$$

167

131 100

Calculating the Result

When patient samples or controls are assayed, the signal read by the system is corrected by the formula derived from the two known calibrators. The corrected signal is compared to the calibration curve, and its associated index value is determined.

- If the index value is greater or equal to 1.0, then the sample is interpreted as reactive.
- If the index value is less than 1.0, then the sample is interpreted as nonreactive.

167

+32 110

Defining Calibration

Use the procedures in this section to define calibration for ACS:Centaur tests:

- Defining Master Curves
- Defining calibrator assigned values

Defining a Master Curve

Use the Master Curve card provided with each new lot number of reagent packs to establish the Master Curve. You can enter, store, display, and calibrate more than one lot of reagent. This allows you to efficiently transition from one lot of reagent to another.

1. At the workspace, select **Calibration**.
2. Select **Master Curve Definition**.

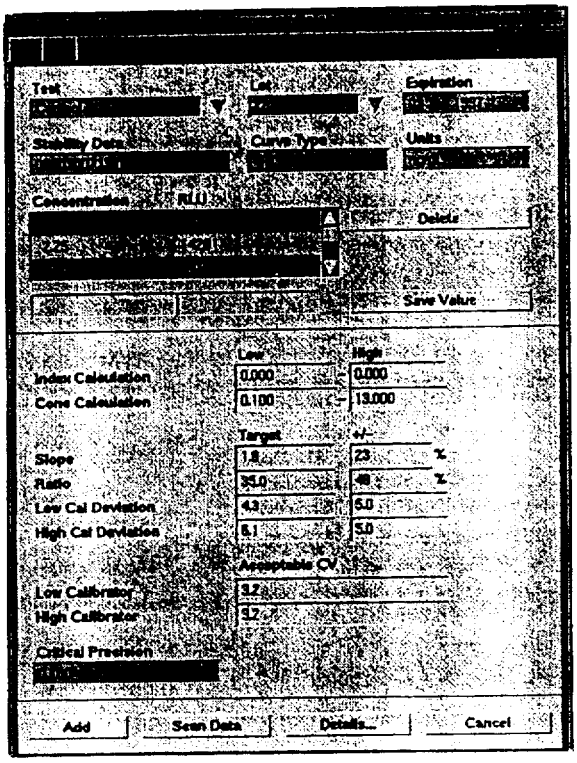

3. Select **Scan Data**.
4. Scan the Master Curve barcodes from the top of the card to the bottom.
5. Select **Save**.

163

133 404

Defining Calibrator Assigned Values

Use this procedure to enter or edit the calibrator values from the Calibrator Assigned Value card for each new lot number of calibrators.

1. At the workspace, select **Calibration**.
2. Select **Calibrator Definition.**

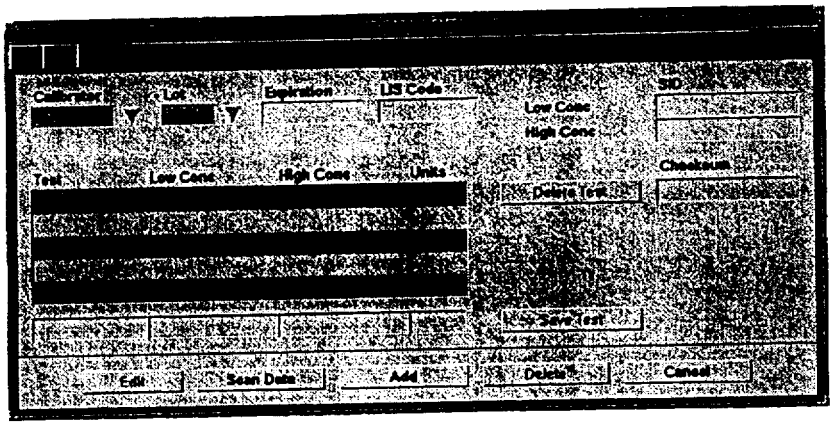

3. Complete the appropriate task.

If you want to . . .	*Then . . .*
enter a calibrator definition	a. Select **Scan Data.** b. Scan the barcodes on the Calibrator Assigned Value card from top to bottom.
manually enter a calibrator definition	a. Select **Add.** b. Enter a calibrator. c. Select or enter a lot. d. Enter the **Expiration** date. e. Enter the **LIS Code.** The SID of the Low Calibrator appears in Low Conc. The SID of the High Calibrator appears in High Conc. f. In the empty row below the table, enter the test name, the Low Calibrator value in Low Conc, the High Calibrator value in High Conc, and the units. g. Select **Save Test.** h. Repeat steps f and g for each test. i. Enter the **Checksum.** j. Select **Save.** k. Select **Yes** to save the changes.

164

174 170

If you want to . . .	*Then . . .*
delete a calibrator definition	a. Select a calibrator. b. Select a lot. c. Select a test. d. Select **Delete**. e. Select **Continue**.
add a test to a calibrator definition	a. Select a calibrator. b. Select a lot. c. Select **Edit**. d. In the empty row below the table, the calibrator test name, the Low Calibrator value in Low Conc, the High Calibrator value in High Conc, and the units. e. Select **Save Test**.
delete a test from a calibrator definition	a. Select a calibrator. b. Select a lot. c. Select a test. d. Select **Delete Test**. e. Select **Continue**.
edit the LIS Code for a calibrator definition	a. Select a calibrator. b. Select a lot. c. Select **Edit**. d. Edit the LIS Code.

4. Select **Save**.
5. Select **Yes** to save the changes.

Performing Calibrations

Use the procedures in this section to calibrate the ACS:Centaur system:

- verify the calibration status
- review due dates for the next calibration
- schedule a calibration
- review calibration data
- print reports

Verifying Calibration Status and Due Dates

The system calculates the next calibration date by adding the calibration interval to the date of the most recent calibration.

1. At the workspace, select **Calibration**.
2. Select **Summary**.
3. Select **All Tests** in View.
4. Select **Status** in Sort.
5. Review the calibration status and due dates.

   The system displays tests without Master Curves, and then expired calibrations.

Calibration Flag	Description
Accepted ?	You manually accepted an invalid calibration. Schedule a calibration as described in *Scheduling Calibrators*, page 5-16.
Current	The calibration is valid and the test does not require calibration.
Due ?	
Expired	The calibration has expired. Schedule a calibration as described in *Scheduling Calibrators*, page 5-16.
Inprocess ?	The test is being calibrated.
Invalid ?	
No Master Curve	The test does not have a Master Curve. Enter a Master Curve for the test as described in *Defining a Master Curve*, page 5-12.

166

136

Calibration Flag	Description
Pending ?	The calibration is scheduled.
Waived	You used an expired calibration for the result. Schedule a calibration as described in *Scheduling Calibrators*, page 5-16.

Scheduling Calibrators

1. At the workspace, select **Worklist**.
2. Select **Schedule.**
3. Select **Calibrator.**

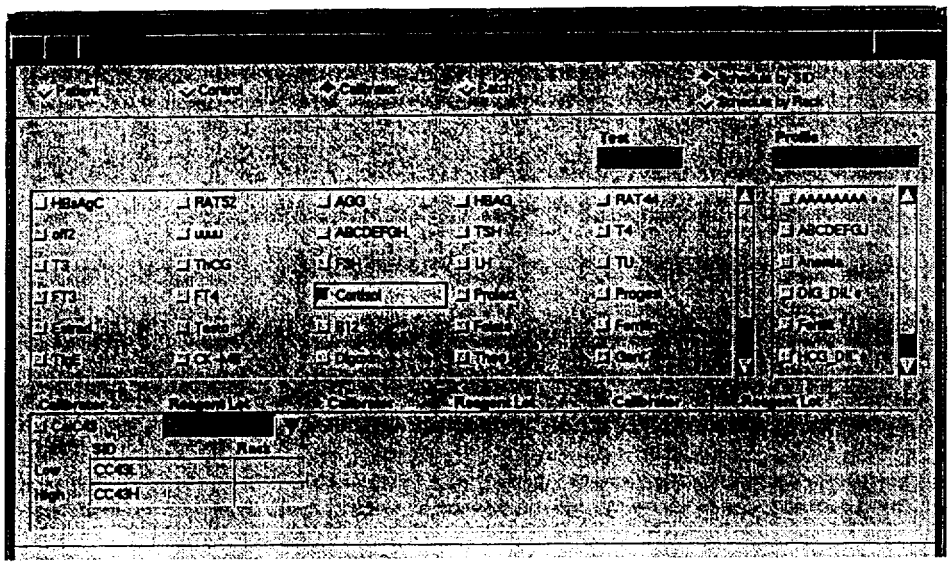

4. Select the appropriate profiles or tests.
5. You can select a calibrator name from the list.
6. You can accept the default reagent lot, enter a lot, or select a lot from the list.

   The system provides the calibrator expiration date and the assigned SIDs for the low and high calibrators.
7. Select the SIDs for the low and high calibrators.
8. You can specify the **Rack** for the low and high calibrators.

   If you do not specify the Rack, the system assigns the Rack when you load the calibrators.
9. Select **Save.**
10. You can repeat steps 4 through 9 to schedule additional calibrators.
11. You can select **Summary** to review the worklist.

167

12. Select **Close** and then select **Yes** to save the changes.
13. Install sample cups of low and high calibrators in a rack.
14. Install the rack on the system as described in *Processing the Samples* in Section 4.

Reviewing Calibration Data

1. At the workspace, select **Calibration**.
2. Select **Data**.

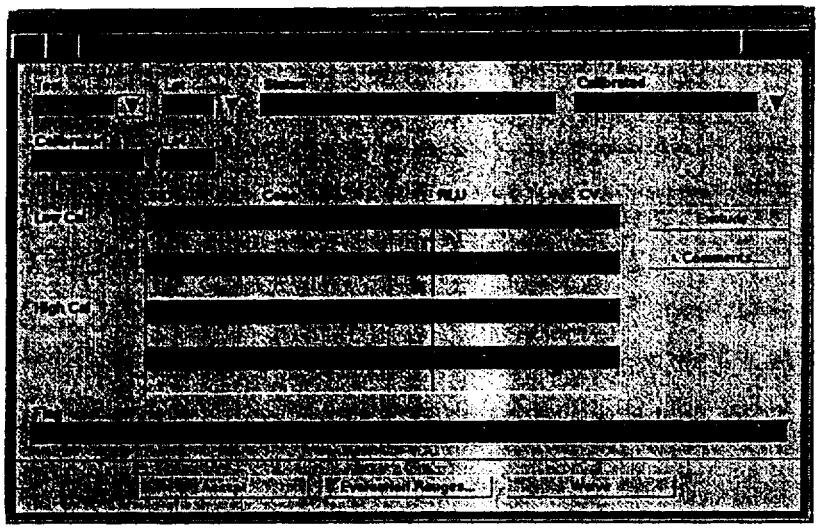

3. Enter the test criteria:
   a. Select a test.
   b. Select a lot number.
   c. Select a calibration date in **Calibrated**.
4. Review the calibration status, results, and flags.

Calibration Flag	Description
Accepted ?	You manually accepted an invalid calibration. Schedule a calibration as described in *Scheduling Calibrators*, page 5-16.
Current	The calibration is valid and the test does not require calibration.
Due ?	
Expired	The calibration has expired. Schedule a calibration as described in *Scheduling Calibrators*, page 5-16.

169

135 169

Calibration Flag	Description
Inprocess ?	The test is being calibrated.
Invalid ?	
No Master Curve	The test does not have a Master Curve. Enter a Master Curve for the test as described in *Defining a Master Curve*, page 5-12.
Pending ?	The calibration is scheduled.
Waived	You used an expired calibration for the result. Schedule a calibration as described in *Scheduling Calibrators*, page 5-16.

5. You can add a comment:
   a. Select a calibrator SID.
   b. Select **Comments**.
   c. Enter up to three comments.
      The system enters your initials and the date.
   d. Select **Save**.
6. You can select **Evaluation Ranges** to review details.

Reviewing Historical Calibration Data

1. At the workspace, select **Calibration**.
2. Select **Summary**.

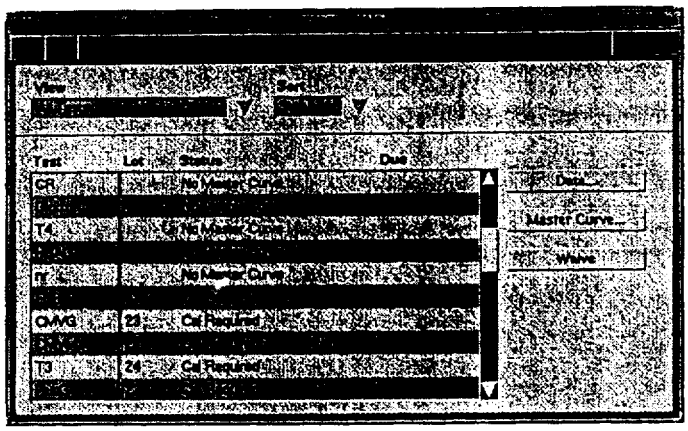

3. Select **Historical** in View.
4. You can enter test criteria:
   a. Select a test.

169

HSP 170

b. Select a reagent lot.

c. Select a calibrator lot.

5. You can select a calibration and select **Data** to review the data.
6. You can select a calibration and select **Master Curve** to review the Master Curve.
7. Select **Save**.
8. You can select **Evaluation Ranges** to review details.

Excluding a Calibration Result

1. At the workspace, select **Calibration**.
2. Select **Data**.

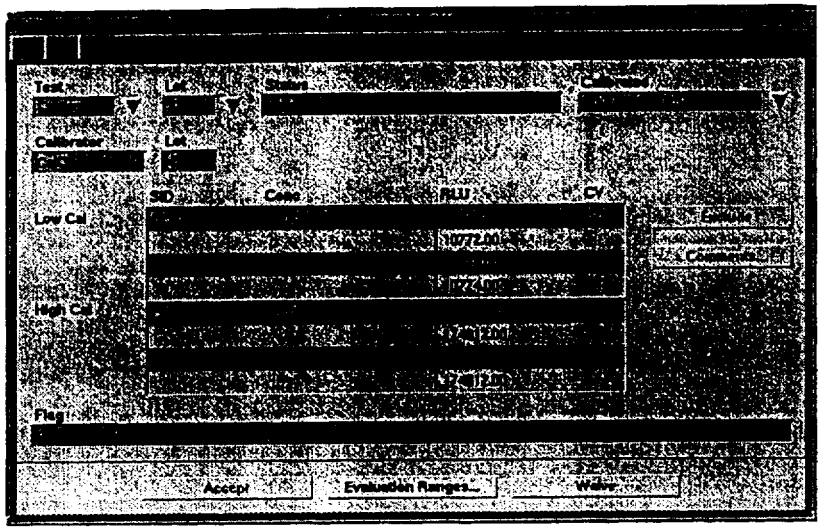

3. Select a test.
4. Select a lot number.
5. Select a calibration date in **Calibrated**.
6. Select a calibrator RLU.
7. Select **Exclude**.
8. Select **Save**.

170

140 141

Waiving an Expired Calibration

The system displays the Expired status flag when the calibration interval for a test is past. You can waive the calibration to run samples in the test.

NOTE: The restricted tests do not allow you to waive expired calibrations. You cannot waive an historic calibration.

1. At the workspace, select **Calibration**.
2. Select **Data**.
3. Select a test.
4. Select a test lot.
5. Select or enter a calibration date in **Calibrated**.
6. Select a calibrator RLU.
7. Select **Waive**.

Accepting an Invalid Calibration

You can accept an invalid calibration by releasing it to an LIS, which activates the calibration.

⚠ **CAUTION:** Accept an invalid calibration only on the recommendation of a Chiron Diagnostics Service Representative.

NOTE: You cannot accept invalid calibrations for some tests.

1. At the workspace, select **Calibration**.
2. Select **Data**.
3. Select a test.
4. Select a lot number.
5. Select a calibration date in **Calibrated**.
6. Select **Accept**.

Printing Calibration Data

1. Open the Calibration window that contains the data that you want to print.
2. At the workspace, select the **Print** symbol.
3. Select the calibration report.
   a. You can select a different starting date or ending date.
   b. You can select the shift.

171

The system prints the report.

172

6 Quality Control

Principles **6-3**

Definitions 6-3

Interpretation of Control Data 6-4

Levey–Jennings Chart 6-4

Westgard Rules 6-5

QC Principles for Quantitative Assays 6-5

QC Principles for Qualitative Assays 6-6

Defining QC **6-7**

Adding a Control 6-7

Editing a QC Definition 6-8

Deleting a Control or a Test 6-8

Printing a QC Definition 6-9

Performing QC **6-10**

Scheduling Controls 6-10

Autoscheduling Controls 6-11

Reviewing QC Data 6-11

Reviewing QC Data Points and Statistics 6-11

Reviewing Levey-Jennings Charts 6-12

Reviewing QC Statistical Summaries 6-13

Editing QC Data Points and Statistics 6-14

Printing QC Reports 6-15

173

Principles

Use this section to learn the principles of Quality Control:

- definitions
- interpretation of control data, such as Levey–Jennings charts and Westgard rules
- QC principles for quantitative assays
- QC principles for qualitative assays

Definitions

Term	Definition
Quality Control	Quality Control (QC) is a method by which acceptable performance is maintained in the analytical laboratory: a. Measure the variability of the analytical process. b. Evaluate the results of the measurement against certain criteria or specifications. c. Correct excess variability when necessary. d. Document the actions.
Quality Control procedures	Reasons for implementing QC procedures include: • to detect when a system is not functioning correctly • to detect shifts in total system performance • to avoid the reporting of erroneous results • to proactively detect trends in system response that may indicate the need for intervention before system performance becomes unacceptable
Quality Control parameters	QC parameters are based on past performance of a system, including a combination of everything involved in the testing process. The system therefore includes the instrument, reagents, system fluids, supplies, materials, and operators. Ranges are constructed to measure the amount of variability. Based on the ranges, it is possible to predict when the system is operating correctly. The controls monitor how well a system is functioning relative to its own performance. When a control falls outside its established range, one or more of the following factors may be involved: • a decrease in precision • a shift in system response • a decrease in accuracy

174
175
176 177

Term	Definition
Quality Assurance	Quality Assurance is the program that ensures the accuracy of the final results reported by the laboratory.
Quality Assessment	Quality Assessment is a method to determine the quality of the results generated by the laboratory. Also known as proficiency testing, it is usually an external evaluation of a laboratory's performance involving the incorporation of proficiency panels as the means of evaluation. Internal quality assessment programs can also be implemented. Quality Assessment is a challenge to the effectiveness of the Quality Assurance and Quality Control programs.

Interpretation of Control Data

A statistically significant number of control data points are generated. Acceptable limits are then established by calculating the mean recovery and a range based on two standard deviations (2SD). Approximately 95% of all subsequent control values should fall within a range of the mean +/– 2SD.

Levey–Jennings Chart

A statistical tool for evaluating and recording the control data is called the Levey–Jennings chart. The chart can evaluate individual results and help to detect trends and shifts in control data.

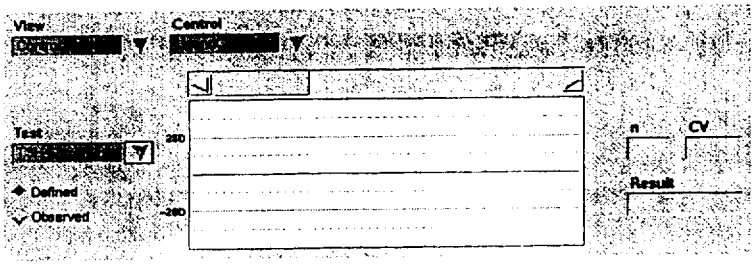

147

176

Westgard Rules

One of the most useful procedures for interpreting control data was developed by Dr. James Westgard and colleagues.[5-1] The Westgard rules are used in conjunction with Levey–Jennings charts to analyze the control data.

Westgard Rule	Description of Violation	Purpose
1_{2s}	One control value falls outside the 2SD limits	warning limit
1_{3s}	One control value falls outside the 3SD limits	to detect large shift or decreased precision
2_{2s}	Two consecutive control values exceed the same 2SD limit	to detect shifts
4_{1s}	Four consecutive control values exceed the same 1SD limit	to detect small shifts or trends, like drift
6x	Six consecutive control values fall on the same side of the mean	to detect trends
T6	Six consecutive control values for one control level display an upward or downward trend	to detect small shifts
10x	Ten consecutive control values fall on the same side of the mean	to detect shifts

The ACS:Centaur system interprets QC data using Westgard rules as follows:

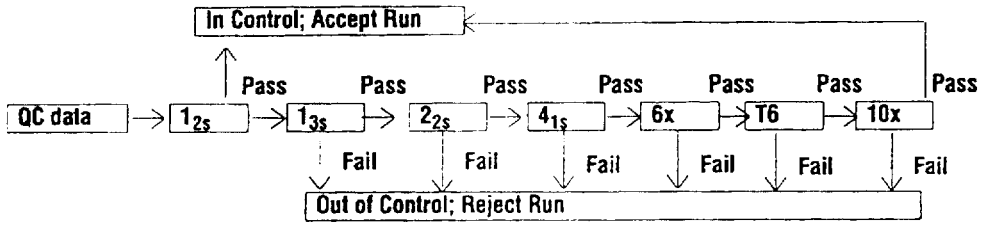

QC Principles for Quantitative Assays

The goal of QC for quantitative assays is to monitor the entire reporting range, or at least the medical decision points.

To monitor system performance and chart trends, Chiron Diagnostics recommends that you run a minimum of three levels of QC material at least once during each 8-hour shift, depending on the assay. If your established QC program requires more frequent use of controls, follow those procedures.

QC Principles for Qualitative Assays

Qualitative tests can be defined as having binary result possibilities: positive or negative, yes or no. Qualitative tests have only one medical decision point or cut-off point. But in reality, qualitative tests have a quantifiable concentration associated with every result.

Measures to control the quality of the results in an Infectious Disease diagnostic laboratory are important because of the consequences of either a false positive or false negative result. Therefore, the goals of QC for qualitative assays are to maximize accuracy, sensitivity, and specificity:

- maximized accuracy minimizes false positives and false negatives
- maximized sensitivity minimizes false negatives
- maximized specificity minimizes false positives

To monitor system performance and chart trends, Chiron Diagnostics recommends that you run a minimum of *[xxx, text from approved PIs]*. If your established QC program requires more frequent use of controls, follow those procedures.

177

145

Defining QC

Use the procedures in this section to define quality control parameters and values for ACS tests:

- add a control
- edit a QC definition
- delete a test or a control
- print a QC definition

Adding a Control

1. At the workspace, select **Quality Control**.
2. Select **Control Definition.**

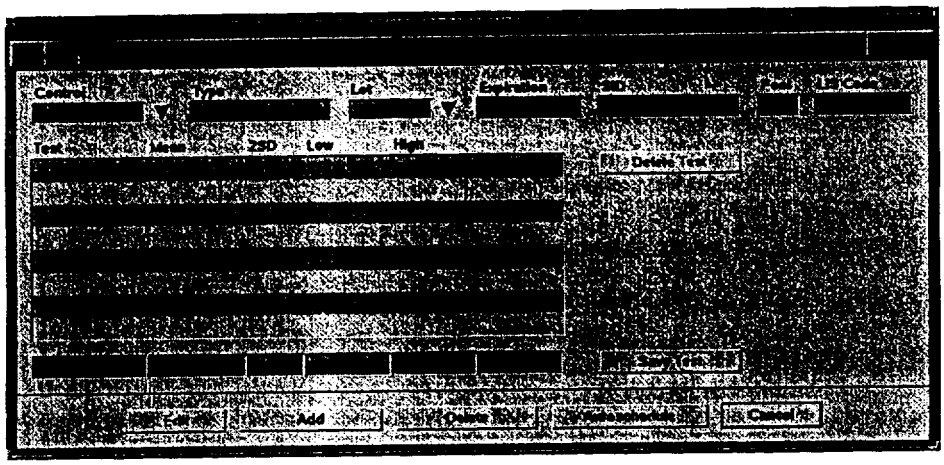

3. Select **Add.**
4. Select or enter a **Control.**
5. Select a **Type.**
6. Select or enter a **Lot.**
7. Select or enter in the fields below the table:
   a. Select a test.
   b. Select the mean and 2SD for the test.
8. Select **Save Test.**
9. Repeat steps 7 and 8 until the control definition is complete.
10. Select **Save.**

178

FO 181

Editing a QC Definition

1. At the workspace, select **Quality Control**.
2. Select **Control Definition**.
3. Select a **Control** and a **Lot**.
4. Select **Edit**.

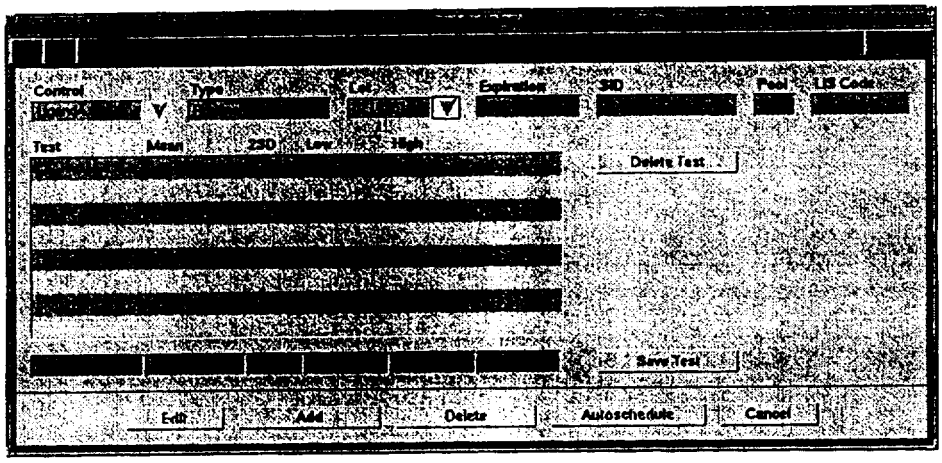

5. You can edit:
   - expiration date
   - SID
   - pool number
   - LIS Code
6. Select a test.
7. You can edit the mean or 2SD in the fields below the table:
   a. Select **Edit**.
   b. Edit the mean or 2SD.
   c. Select **Save Test**.
8. Repeat steps 6 and 7 to edit the mean or SD for other tests.
9. Select **Save**.
10. Select **Continue**.

Deleting a Control or a Test

1. At the workspace, select **Quality Control**.

179

181

2. Select **Control Definition**.

If you want to . . .	*Then . . .*
delete a control definition	a. Select a **Control** and a **Lot**. b. Select **Delete**.
delete a test for a control	a. Select a **Control** and a **Lot**. b. Select a test. c. Select **Edit Test**. d. Select **Delete Test**. e. Select **Yes**.

3. Select **Save**.
4. Select **Yes**.

Printing a QC Definition

1. At the workspace, select **Quality Control**.
2. Select **Control Definition**.
3. At the workspace, select the **Print** symbol.
4. Select **Report Options**.
5. Select the report.
   The system prints the report.

180

Performing QC

Use the procedures in this section to schedule controls, review QC data, review statistical summaries, edit QC data, and print reports.

Run a minimum of three levels of QC material at least once during each 8 or 24 hour shift, depending on the assay. If your established QC program requires more frequent use of controls, then follow those procedures. Refer to the ACS assay product inserts for specific QC recommendations for each assay.

Scheduling Controls

1. At the workspace, select **Worklist**.
2. Select **Schedule**.
3. Select **Control**.

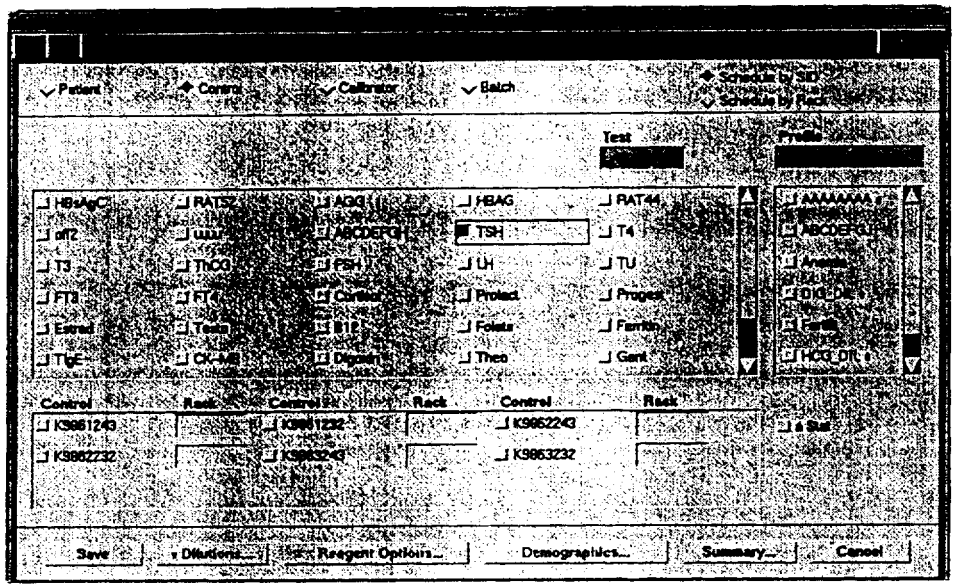

4. Enter or select the appropriate profiles or tests.
5. Select a control.
6. You can select the following options:
   - enter the **Rack**.
   - select **Stat**.
7. Select **Save**.
8. You can repeat steps 4 through 7 to schedule additional controls.
9. Install sample cups of QC material in the racks.

184

173

10. Install the racks in the sample entry queue, as described in *Processing the Samples* in Section 6.

Autoscheduling Controls

1. At the workspace, select **Quality Control**.
2. Select **Control Definition**.
3. Select a control.
4. Select a lot.
5. Select **Autoschedule**.
6. Select **Continue**.
7. Select **Save** and then select **Yes** to save the changes.

Reviewing QC Data

You can review QC data points and statistics, Levey-Jennings charts, and monthly and lot-to-date statistical summaries.

Reviewing QC Data Points and Statistics

The system stores up to 300 data points for each combination of tests and control lots.

1. At the workspace, select **Quality Control**.
2. Select **Data**.

182

3. Enter the criteria for the data that you want to display.

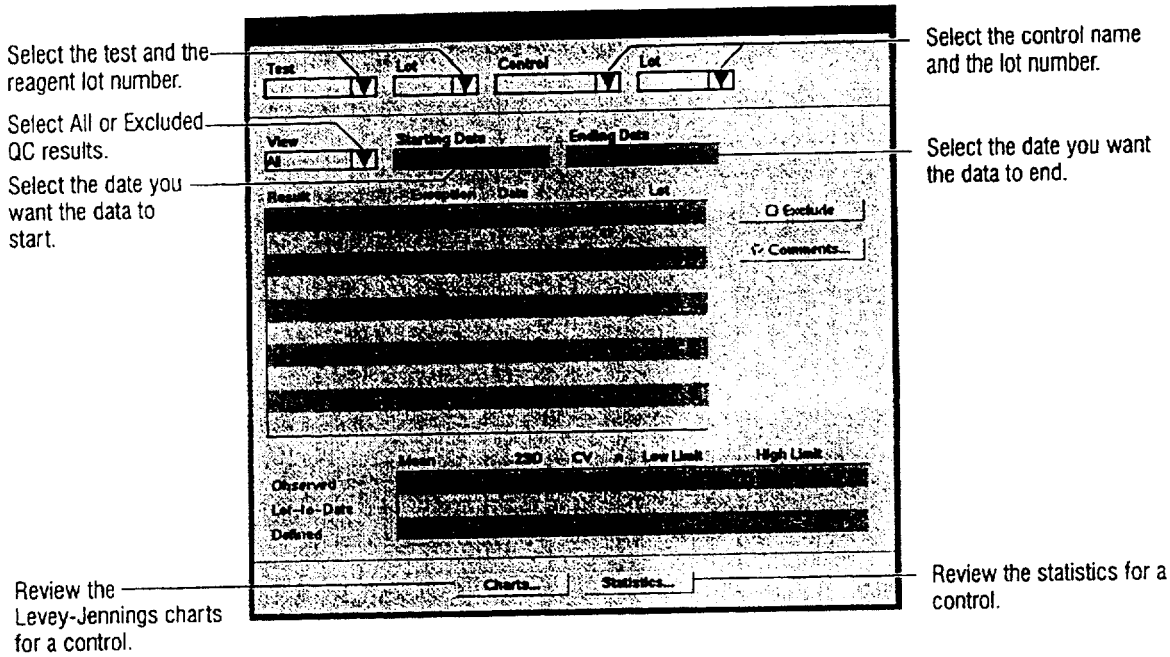

4. Review the results, exceptions, and statistics.
5. You can add a comment:
   a. Select a result.
   b. Select **Comments**.
   c. Enter up to three comments. The system enters your initials and date.
   d. Select **Save**.

Reviewing Levey-Jennings Charts

Each Levey-Jennings chart displays up to 90 data points, the mean, and three standard deviations. The ACS system stores up to 300 data points for each combination of tests and controls.

1. At the workspace, select **Quality Control**.
2. Select **Charts**.

183

3. Select a display option.

If you want to display data points . . .	*Then . . .*
for one test and up to three controls	a. Select **Test** in **View**. b. Select the test you want to display in **Test**. c. For each chart, select the control. d. For each chart, select **Defined** or **Observed**.
for one control and up to three tests	a. Select **Control** in **View**. b. Select the control you want to display in **Control**. c. For each chart, select the test. d. For each chart, select **Defined** or **Observed**.

4. You can change the starting date or ending date of the charts by selecting the starting date or ending date arrows at the lower corners of the charts.
5. You can display chart details:
   a. Select a data point.
   b. Select **Details**.
6. You can display additional data:
   a. Select a data point.
   b. Select **Data**.

Reviewing QC Statistical Summaries

Use this procedure to review cumulative monthly and lot-to-date statistics for a selected test and control.

1. At the workspace, select **Quality Control**.

184

2. Select **Statistics**.

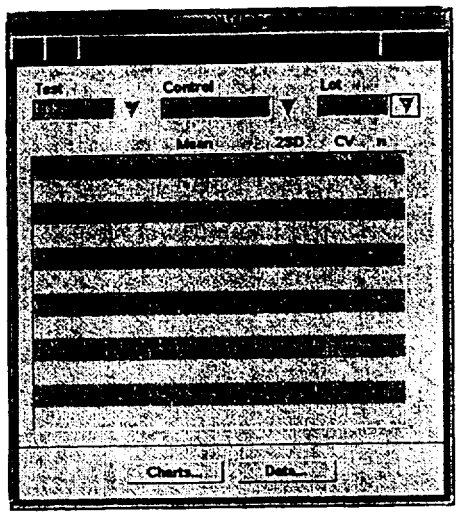

3. Select a test.
4. Select a control name.
5. Select a control lot number.

Editing QC Data Points and Statistics

The system stores up to 300 data points for each combination of tests and control lots.

1. At the workspace, select **Quality Control**.
2. Select **Data**.
3. Enter the criteria for the data you want to display:
   a. Select a test.
   b. You can select a test lot number.
   c. Select a control.
   d. You can select a control lot number.
   e. You can select **Excluded** in **View**.
   f. Select the starting date and the ending date.
4. Review the results, exceptions, and statistics.

185

47 188

5. Select the result.

If you want to . . .	*Then . . .*
exclude a result	Select **Exclude**.
include an excluded result	Select **Include**.
add a comment about a result	a. Select **Comments**. b. Enter up to three comments. The system enters your initials and the date. c. Select **Save**.

Printing QC Reports

1. Open the QC window that contains the data you want to print.
2. At the workspace, select the **Print** symbol.
3. Select **Report Options**.
4. Select the QC report.
   The system prints the report.

186

7 Maintenance

Daily Maintenance 7-5
Daily Cleaning Procedure 7-5
Replacing the Water Bottle 7-5

Weekly Maintenance 7-6
Cleaning the Water Bottle and Water Reservoir 7-6
Cleaning the Sample Tip Waste Area 7-9

Monthly Maintenance 7-13
Performing the Monthly Cleaning Procedure 7-13
Cleaning the Reagent Probes 7-15
Cleaning the Ancillary Probe 7-17
Cleaning the Aspirate Probes 7-18
Cleaning the Cuvette Waste Area 7-19
Cleaning the Air Filter 7-24

As-Needed Maintenance 7-27
Replacing the Cleaning Solution 7-27
Cleaning the Probe Rinse Stations 7-28
Cleaning the Reagent Probe Shutter 7-29
Cleaning the Primary Reagent Compartment and Reagent Slides 7-30
Cleaning the Covers and Pointing Device 7-31
Cleaning the Sample Racks 7-31

Accessing Maintenance Information 7-3
Using the Maintenance Schedule 7-3
Using the Maintenance Log 7-3
Accessing Online Maintenance Procedures 7-4
Printing the Maintenance Schedule 7-4

187

Accessing Maintenance Information

Use this section to perform the following tasks:

- use the maintenance schedule
- use the maintenance log
- access online maintenance procedures
- print the maintenance schedule

Using the Maintenance Schedule

The ACS:Centaur system provides a maintenance schedule that lists the maintenance tasks.

1. At the workspace, select the **Maintenance** symbol.

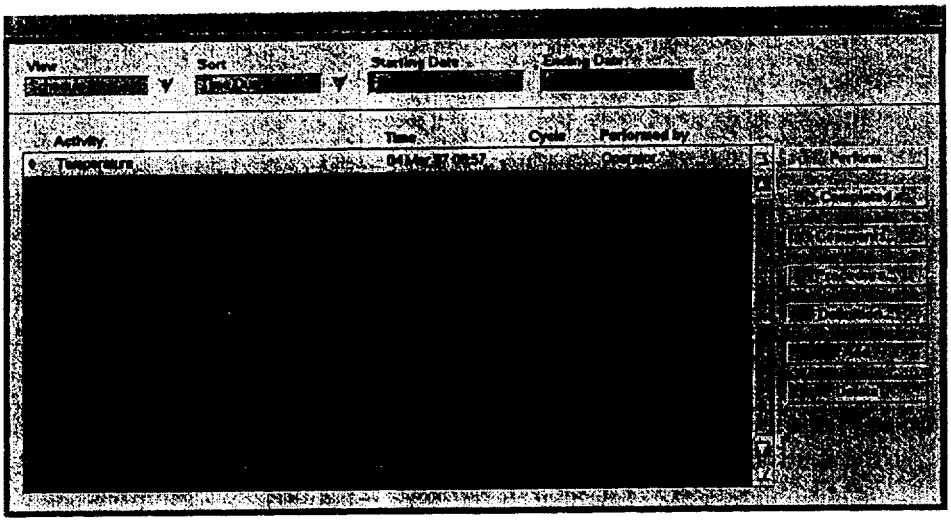

2. Select **Schedule** in View.

Using the Maintenance Log

The ACS:Centaur system provides a maintenance log to update a maintenance task after you complete a task.

1. At the workspace, select the **Maintenance** symbol.

188

160 191

2. Select **Log** in View.

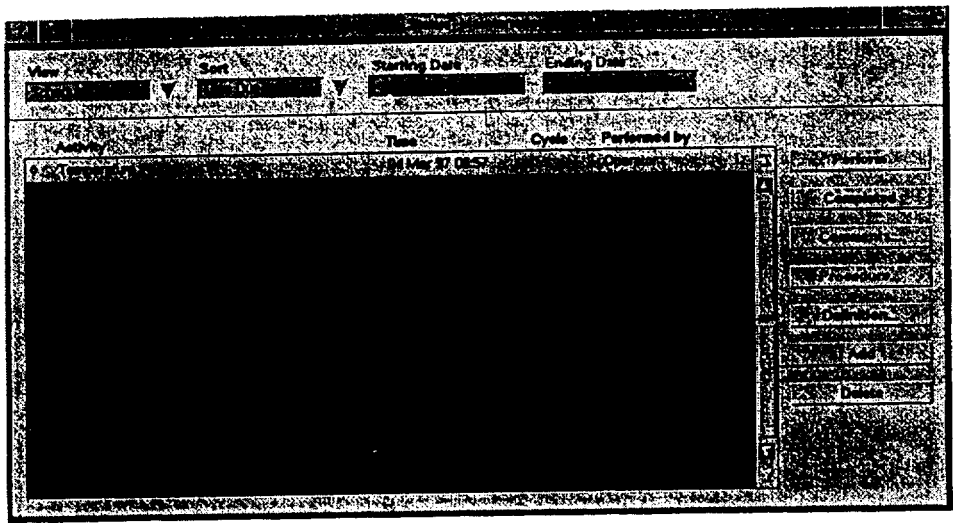

3. Select a task.
4. Enter your initials in Initials.
5. Select **Save**.

Accessing Online Maintenance Procedures

Maintenance activity information provides a brief procedure on how to perform the maintenance activity.

Select a maintenance activity in the Status–Maintenance window and then select **Procedure** to access information about a maintenance activity. You can select **Figure** to display an illustration of the procedure.

Weekly, Monthly, and As-Needed Procedures provide detailed procedures and illustrations.

Printing the Maintenance Schedule

1. At the workspace, select the **Maintenance** symbol.
2. Ensure that **Schedule** is selected in View.
3. At the workspace, select **Print**.
4. Select **Maintenance Schedule**.

Daily Maintenance

Daily maintenance includes the following procedures:

- daily cleaning procedure
- replacing the water bottle

Daily Cleaning Procedure

You can start the daily cleaning procedure at any time. Allow approximately xx minutes to complete the wash cycle and approximately xx minutes to complete the rinse cycle.

NOTE: You cannot process samples while the cleaning procedure is in progress.

The cleaning procedure cleans the probes, the rinse bowls, and the rinse stations. To optimize effectiveness of the cleaning procedure and enhance system performance, schedule the cleaning procedure after your peak workload.

⚠ **CAUTION:** Choosing not to perform the cleaning procedure can result in bacterial contamination, paramagnetic particle buildup, protein buildup, and crystallization, which can affect patient results.

1. At the workspace, select the **Maintenance** symbol.

   Ensure that the View is Schedule.

2. Select **Daily Cleaning Procedure**.

3. Select **Perform**.

   The system starts the cleaning procedure.

   NOTE: If the cleaning procedure stops before it completes, the system prevents you from testing samples until it completes the cleaning procedure or completes a rinse cycle.

4. If the cleaning procedure stops before it completes, select **Rinse**.

Replacing the Water Bottle

1. Remove and empty the water bottle as described in section 4, *Operating the System*.
2. Rinse the water bottle with reagent water, and invert the bottle to dry.
3. Fill the spare water bottle with reagent water.
4. Install the spare, full water bottle on the system.

190

10 ✓ 192

Weekly Maintenance

Weekly maintenance includes the following procedures:

- cleaning the water bottle and water reservoir
- cleaning the sample tip waste area

The following reagents and supplies are required:

- Chiron Diagnostics Cleaning Solution
- small bottle brush
- lint-free tissues or gauze
- clean, dry sample tip waste tube

Ensure that the system is off by selecting System Status, and then Turn Off System.

Cleaning the Water Bottle and Water Reservoir

WARNING Cleaning solution contains sodium hypochlorite. When handling the cleaning solution, follow appropriate chemical safety guidelines, which include wearing gloves, protective eye shield, and a laboratory coat.

1. Remove the water bottle.

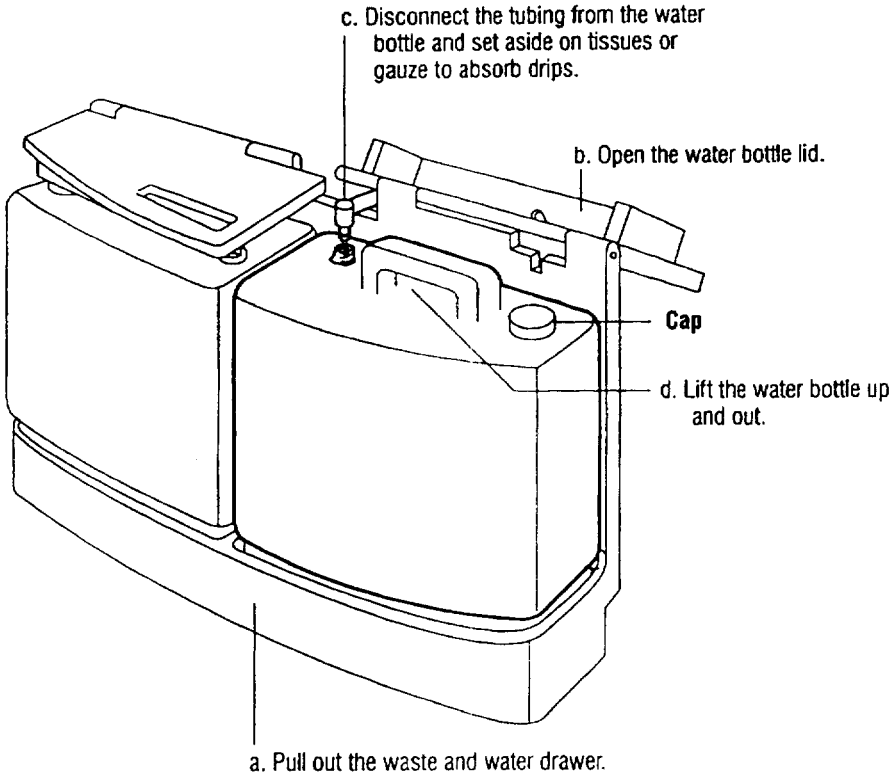

191

2. Remove the cap and empty any water from the water bottle.
3. Remove the water reservoir:

CAUTION: Handle the sensors gently because they are fragile.

CAUTION: To avoid crimps, grasp the fitting on the top of the reservoir. Do not grasp the tubing.

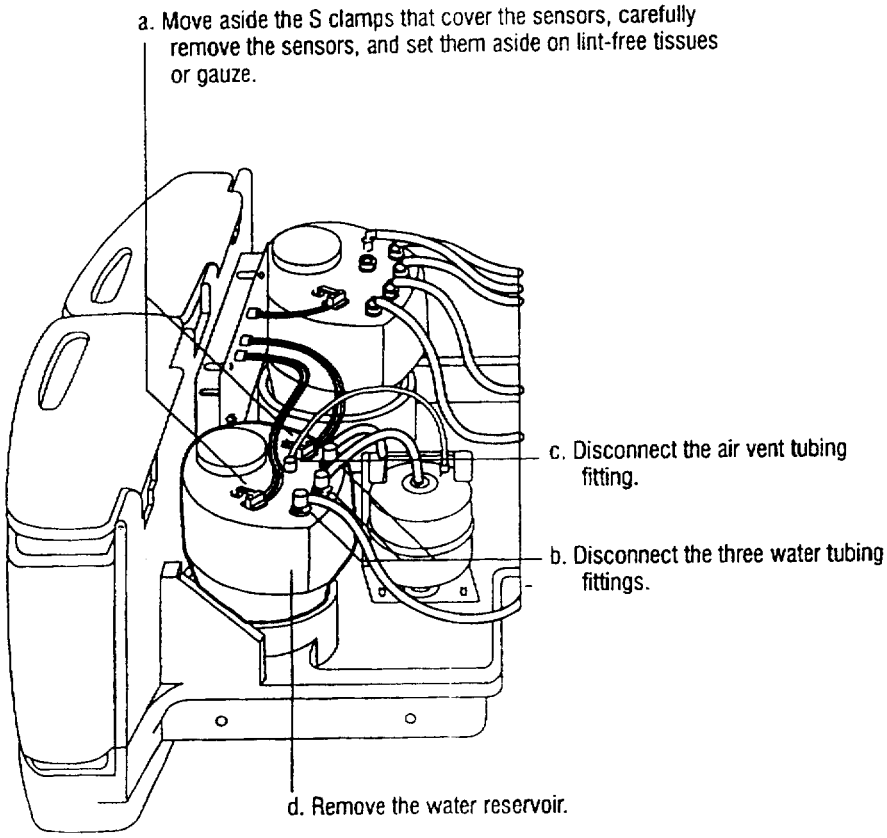

4. Remove the cap and empty any water from the reservoir.

CAUTION: Residual cleaning solution in the water reservoir tubing can affect assay performance. Ensure that the water reservoir is rinsed thoroughly with fresh reagent water after performing the cleaning procedure.

5. Clean the water reservoir:
   a. Pour approximately 1 L of cleaning solution into the reservoir.
   b. Place the cap on the bottle and close tightly.
   c. Swirl the solution around the inside of the reservoir a few times.
   d. Press a thick wad of gauze over the holes in the top of the reservoir, invert the reservoir, swirl the solution a few times, and return the reservoir to the upright position.
   e. Soak the reservoir for 5 minutes.
   f. Repeat steps c through e.

198

g. Swirl the solution again and then empty it.

h. Remove the cap and wipe the inside of the cap with cleaning solution.

i. Thoroughly rinse the inside of the reservoir and the cap at least five times with fresh reagent water.

j. Press some gauze over the holes in the top of the reservoir, invert the reservoir, swirl the water, and return the reservoir to the upright position.

k. Repeat step j once.

6. Add fresh reagent water to the reservoir until it is 3/4 full, and install the cap on the reservoir.

7. Install the water reservoir:

   a. Place the water reservoir in the waste and water drawer.

   NOTE: Ensure that the sensor tips are thoroughly cleaned and rinsed.

   b. Wipe the sensors with lint-free tissues or gauze saturated with cleaning solution.

   c. Wipe the sensors with lint-free tissues or gauze saturated with reagent water.

   d. Install the sensors in the top of the reservoir.

   e. Secure the sensors with the S clamps.

   f. Connect the air vent tubing and three water tubing fittings to the correct positions on the top of the reservoir.

8. Fill the spare, clean water bottle with fresh reagent water and install the cap.

9. Install the spare, full water bottle:

   a. Place the water bottle in the waste and water drawer.

   b. Connect the water bottle tubing to the bottle.

   c. Lower the water bottle lid.

⚠ **CAUTION:** Residual cleaning solution in the water bottle tubing can affect water filter and assay performance. Ensure that the water bottle is rinsed with fresh reagent water after performing the cleaning procedure.

10. Clean the water bottle:

    a. Pour approximately 1 L of cleaning solution into the water bottle.

    b. Place the cap on the bottle and close tightly.

    c. Swirl the solution around the inside of the bottle a few times, then invert and swirl, as in step 5d.

    d. Soak the bottle for 5 minutes.

    e. Repeat steps c and d.

    f. Swirl the solution again and then empty it.

    g. Rinse the inside of the bottle at least five times with fresh reagent water, and invert it to dry.

193

(b7

11. Push in the waste and water drawer.

Cleaning the Sample Tip Waste Area

The sample tip waste area includes the tip remover, tube, chute, and reservoir.

BIOHAZARD: Refer to Appendix A, *Protecting Yourself from Biohazards*, for recommended precautions when working with biohazardous materials.

WARNING Cleaning solution contains sodium hypochlorite. When handling the cleaning solution, follow appropriate chemical safety guidelines, which include wearing gloves, protective eye shield, and a laboratory coat.

1. Open the top cover.
2. Remove the sample tip remover and waste tube:
   a. Gently push the sample probe and ancillary probe toward the incubation ring.
   b. Loosen the knurled knob.
   c. Lift the tip remover and tube up and out of the system.

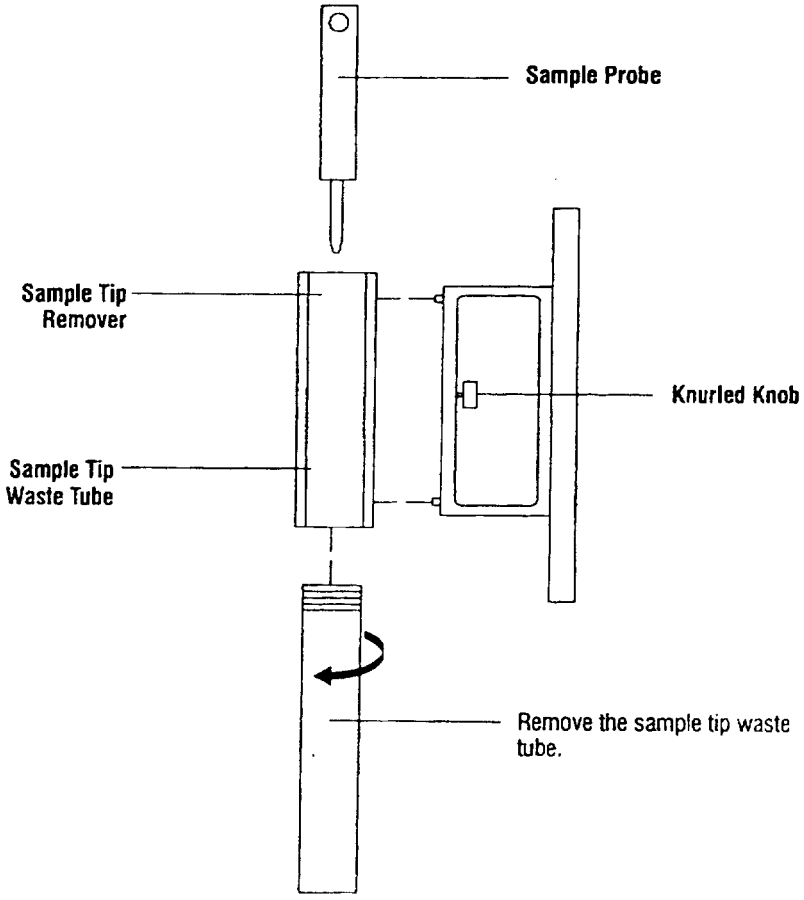

194

3. Clean the sample tip remover and waste tube:
   a. Unscrew the tube from the tip remover.
   b. Soak them in cleaning solution for 5 minutes.

   ⚠ **CAUTION:** Scrub gently to avoid splattering the material from the inside of the tube.

   c. Use a brush or sponge to clean the inside of the tube.
   d. Rinse the tip remover and tube with water, and set the tube aside to dry completely.
   e. Thoroughly dry the tip remover.
   f. Connect the tip remover to the spare waste tube.
4. Install the sample tip remover and waste tube:
   a. Place the bottom of the tube into the opening below the sample probe.
   b. With the slot on the tip remover facing away from you, align the two locator pins on the right side with the holes on the mounting block.
   c. Turn the knurled knob until the tip remover is secure.
5. Close the top cover.
6. Access the sample tip waste chute:
   a. Open the right waste door.
   b. Remove and empty the sample tip waste bin.
   c. Pull out the drawer.
   d. Lift the lid to the cleaning solution bottle.
   e. Remove the cleaning solution bottle.

⚠ **CAUTION:** Avoid touching the cleaning solution tubing. Cleaning solution can drip from the tubing.

7. Remove the sample tip waste chute.

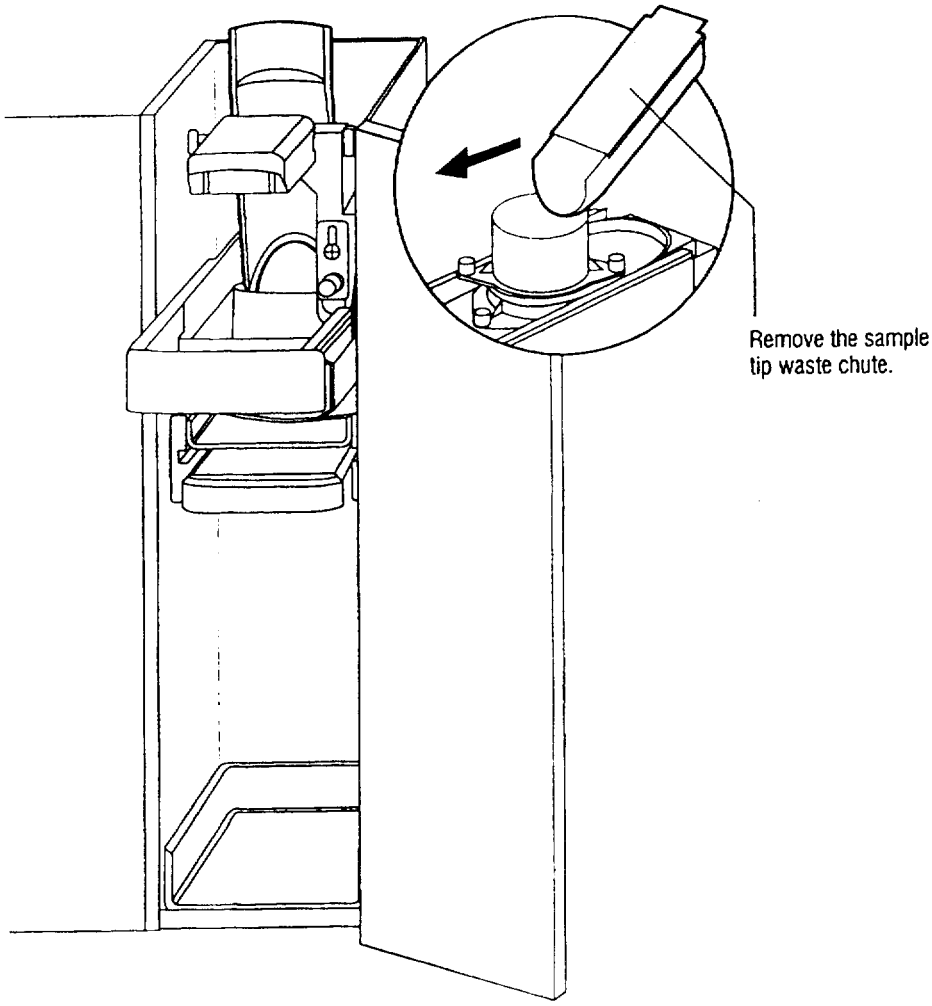

8. Clean the sample tip waste chute and the sample tip waste reservoir:
   a. Soak both parts of the chute in cleaning solution for 5 minutes.
   b. While the chute is soaking, wipe the sample tip waste reservoir with tissues or gauze saturated with cleaning solution.
   c. Wipe the reservoir with tissues or gauze saturated with water.
   d. Dry the reservoir.

   ⚠ **CAUTION:** Scrub gently to avoid splattering the material from the inside of the tube.

   e. Use a bottle brush to clean the chute.
   f. Rinse the chute with water.
   g. Dry the chute.
9. Install the sample tip waste chute:
   a. Assemble the chute.

196

199

b. Align the pins on the top of the chute with the J hooks, and install the bottom of the chute in the reservoir.

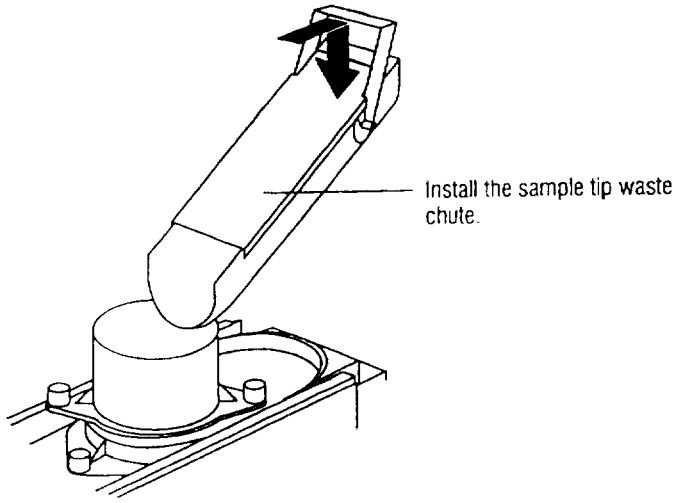

NOTE: You can replace the cleaning solution if it is low as described in *Replacing the Cleaning Solution.*

10. Install the cleaning solution bottle:
    a. Place the bottle in the drawer.
    b. Close the lid.
    c. Close the drawer.
11. Install the sample tip waste bin.
12. Close the right waste door.

Monthly Maintenance

Monthly maintenance includes the following procedures:

- performing the monthly cleaning procedure
- cleaning the reagent probes and ancillary probe
- cleaning the aspirate probes
- cleaning the cuvette waste area
- cleaning the air filter

The following reagents and supplies are required:

- approximately 3 L of cleaning solution
- at least 4 L of reagent water
- bottle brush
- lint-free tissues or gauze
- monthly cleaning tubing

Performing the Monthly Cleaning Procedure

Allow approximately 30 minutes to complete this procedure. You cannot use the system for testing during this procedure.

BIOHAZARD: Refer to Appendix A, *Protecting Yourself from Biohazards*, for recommended precautions when working with biohazardous materials.

WARNING Cleaning solution contains sodium hypochlorite. When handling the cleaning solution, follow appropriate chemical safety guidelines, which include wearing gloves, protective eye shield, and a laboratory coat.

1. Start the monthly cleaning procedure:
   a. At the workspace, select the **Maintenance** symbol.
      Ensure that the View is Schedule.
   b. Select **Monthly Cleaning Procedure**.
   c. Select **Perform**.
   The system starts the cleaning procedure by emptying the waste reservoir.
2. When the waste reservoir is empty, add cleaning solution to the water bottle:
   a. Remove the water bottle.
   b. Add approximately 4 L of cleaning solution to the water bottle.
   c. Install the water bottle.
3. Empty the water reservoir and the waste bottle:

a. Remove the water reservoir and the waste bottle.
b. Empty the water reservoir and the waste bottle.
c. Install the water reservoir and the waste bottle.

4. Remove the water filter:
   a. Disconnect the air vent tubing from the top of the water filter.
   b. Disconnect the upper and lower filter fittings from the filter.
   c. Remove the filter.
   d. Connect the upper and lower fittings to each other.

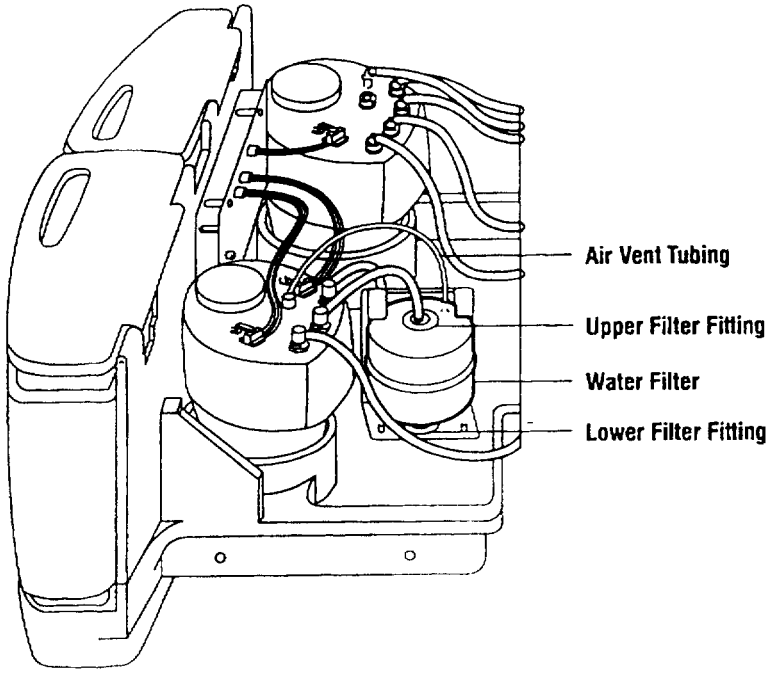

5. Connect the monthly cleaning tubing to the waste reservoir and to the quick disconnect (located between valve 66 and valve manifold).
   a. Select **Continue**.
6. When prompted, add reagent water to the water bottle:
   a. Remove and thoroughly rinse the water bottle with reagent water.
   b. Add approximately 2 L of reagent water to the water bottle.
   c. Install the water bottle.
   d. Select **Continue**.
7. When prompted, rinse the water bottle and the water reservoir, and add reagent water to the water bottle:
   a. Remove the water bottle and the water reservoir.

199

b. Thoroughly rinse the water bottle and the water reservoir with reagent water.
c. Add approximately 2 L of reagent water to the water bottle.
d. Install the water bottle and the water reservoir.
e. Select **Continue**.

8. When prompted, rinse the water bottle and the water reservoir:
   a. Remove the water bottle and the water reservoir.
   b. Thoroughly rinse the water bottle and the water reservoir with reagent water.
   c. Fill the water bottle with reagent water.
   d. Install the water bottle and the empty water reservoir.
   e. Select **Continue**.
9. When prompted, remove the monthly cleaning tubing:
   a. Disconnect the monthly cleaning tubing.
   b. Reconnect the valve manifold water fitting.
   c. Select **Continue**.

   The system primes the water reservoir and the water filter.

Cleaning the Reagent Probes

BIOHAZARD: Refer to Appendix A, *Protecting Yourself from Biohazards*, for recommended precautions when working with biohazardous materials.

WARNING The probe tips are sharp and can cause skin punctures. Be careful not to bend the probes.

NOTE: Ensure that the system is off by selecting System Status, and then Turn Off System.

1. Lift the top cover.

300

2. Remove the reagent probes cover.

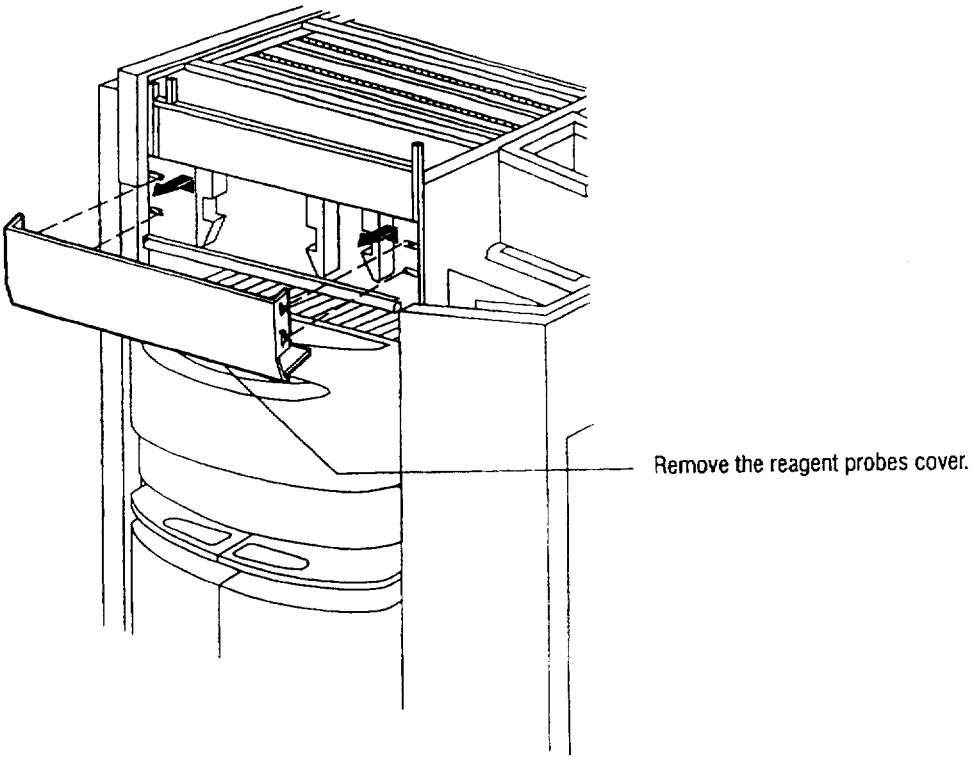

3. Clean the three reagent probes:
   a. Push the probes toward the incubation ring.
   b. Check the probe tip for damage. If a probe is damaged, replace the probe.
   c. Wipe each probe using a downward motion with lint-free tissues or gauze saturated with cleaning solution.

CAUTION: Thoroughly rinse the probe, especially the middle and top of the probe. Residual cleaning solution can affect assay performance or damage the probe.

201

175 204

d. Wipe each probe using a downward motion with lint-free tissues or gauze saturated with reagent water.

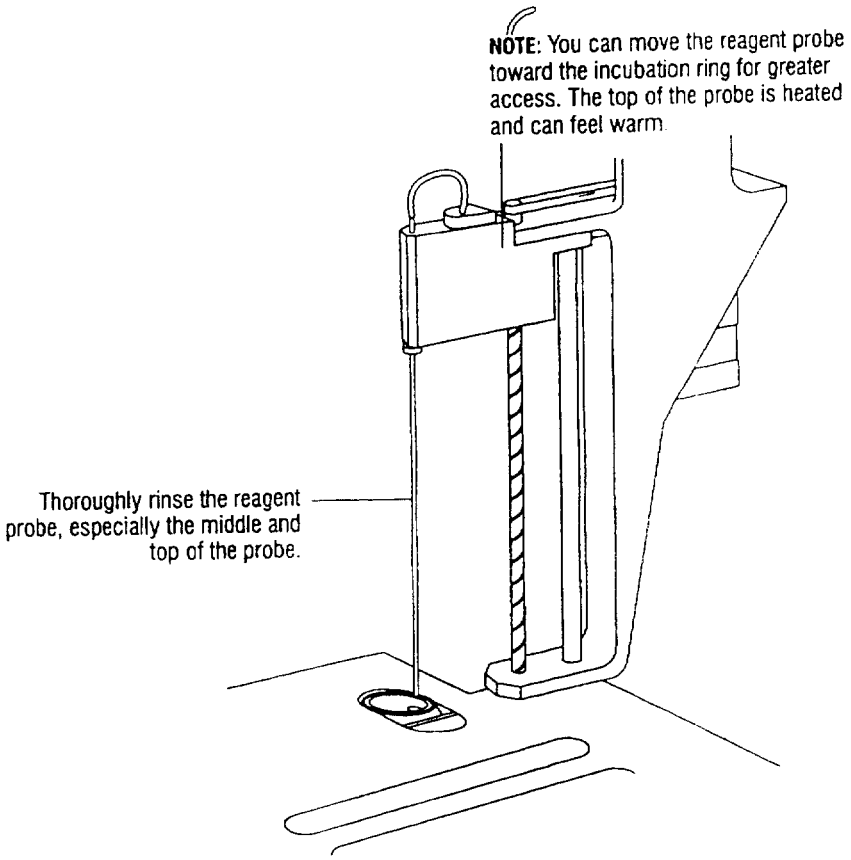

4. Install the reagent probes cover.

Cleaning the Ancillary Probe

BIOHAZARD: Refer to Appendix A, *Protecting Yourself from Biohazards*, for recommended precautions when working with biohazardous materials.

WARNING The probe tips are sharp and can cause skin punctures. Be careful not to bend the probes.

NOTE: Ensure that the system is off by selecting System Status, and then Turn Off System.

1. Lift the top cover.
2. Clean the ancillary probe:
   a. Check the probe tip for damage. If the probe is damaged, replace the probe.

b. Wipe the probe using a downward motion with lint-free tissues or gauze saturated with cleaning solution.

c. Wipe the probe using a downward motion with lint-free tissues or gauze saturated with reagent water.

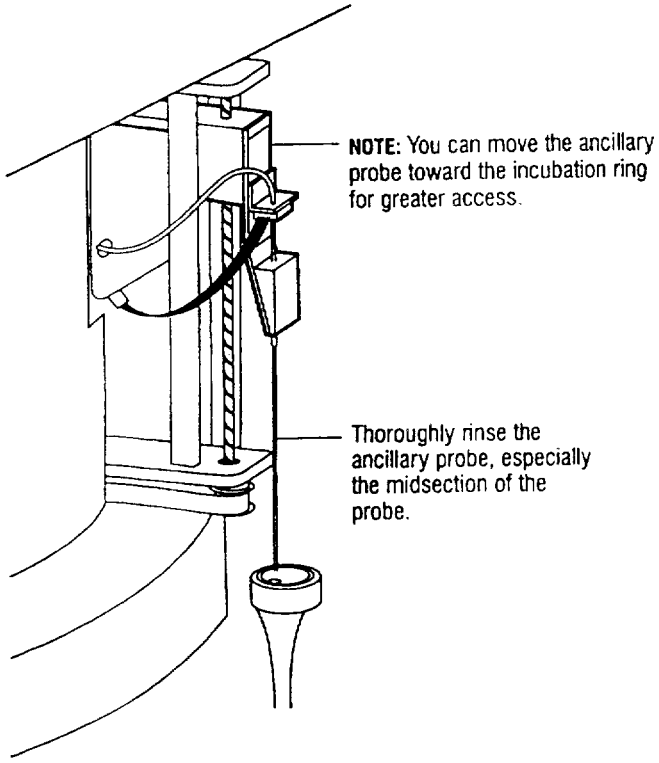

Cleaning the Aspirate Probes

BIOHAZARD: Refer to Appendix A, *Protecting Yourself from Biohazards*, for recommended precautions when working with biohazardous materials.

WARNING The probe tips are sharp and can cause skin punctures. Be careful not to bend the probes.

CAUTION: Ensure that you do not crimp the tubing. Crimped tubing can affect assay performance.

NOTE: Ensure that the system is off by selecting System Status, and then Turn Off System.

1. Carefully lift the probe arm up to the highest position.
2. Wipe the probe with lint-free tissues or gauze saturated with cleaning solution.

203

3. Wipe the probe with lint-free tissues or gauze saturated with reagent water.

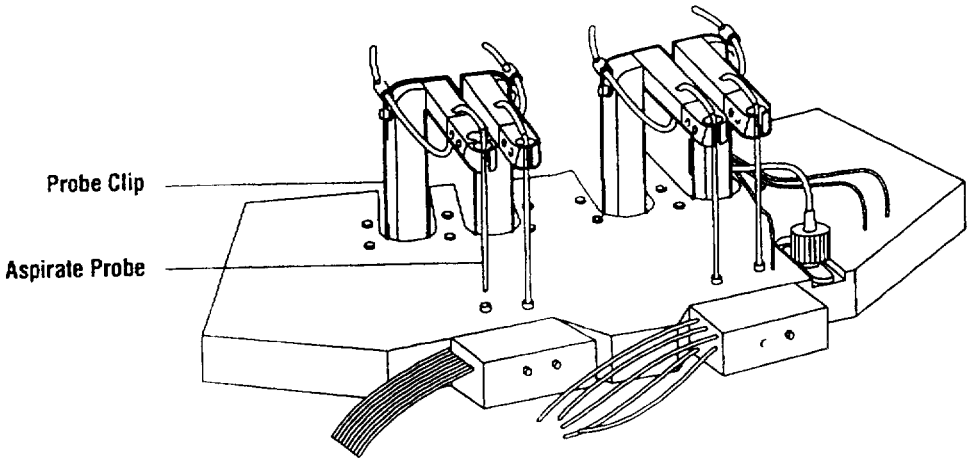

CAUTION: Ensure that each probe clip is in its locked position to hold the probe firmly in place. Failure to do so will cause damage to the probe.

4. Close the top cover.

Cleaning the Cuvette Waste Area

BIOHAZARD: Refer to Appendix A, *Protecting Yourself from Biohazards*, for recommended precautions when working with biohazardous materials.

NOTE: Ensure that the system is off by selecting System Status, and then Turn Off System.

1. Remove the left waste door.

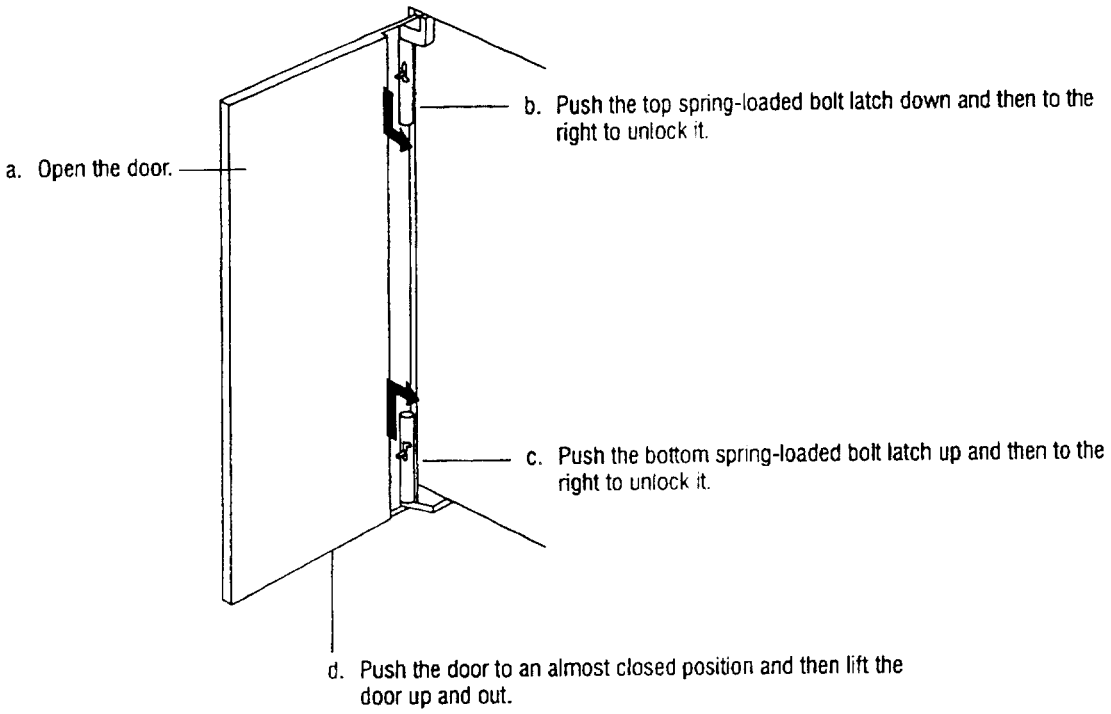

2. Remove any empty sample tip trays and covers from the tip tray bin.

205

171 208

3. Remove the tip tray bin.

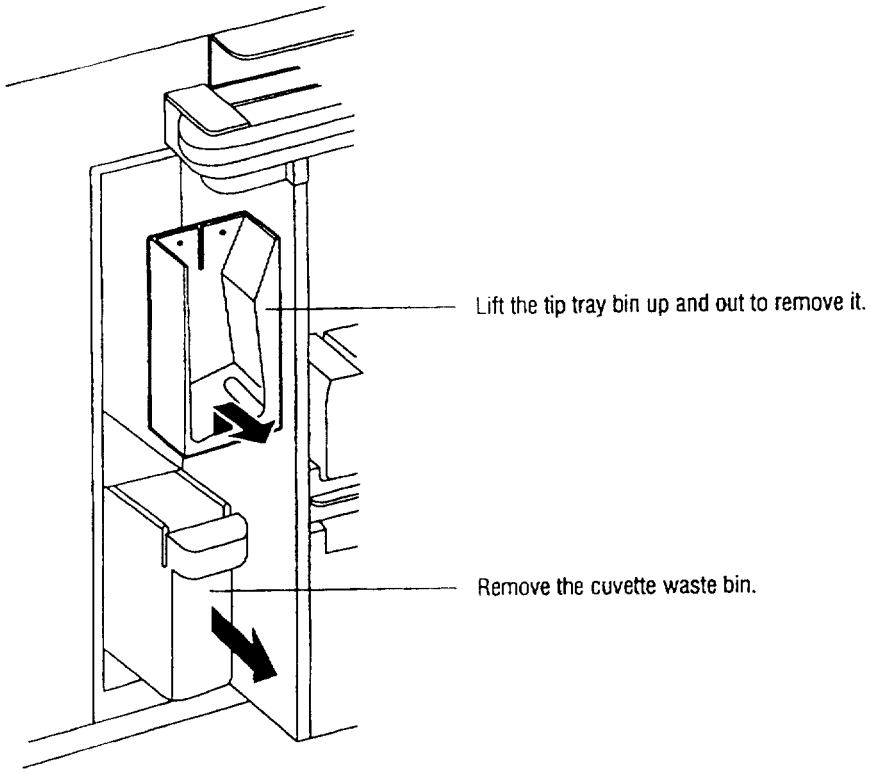

4. Remove the cuvette waste bin and empty it.

206

5. Remove the cuvette waste chute.

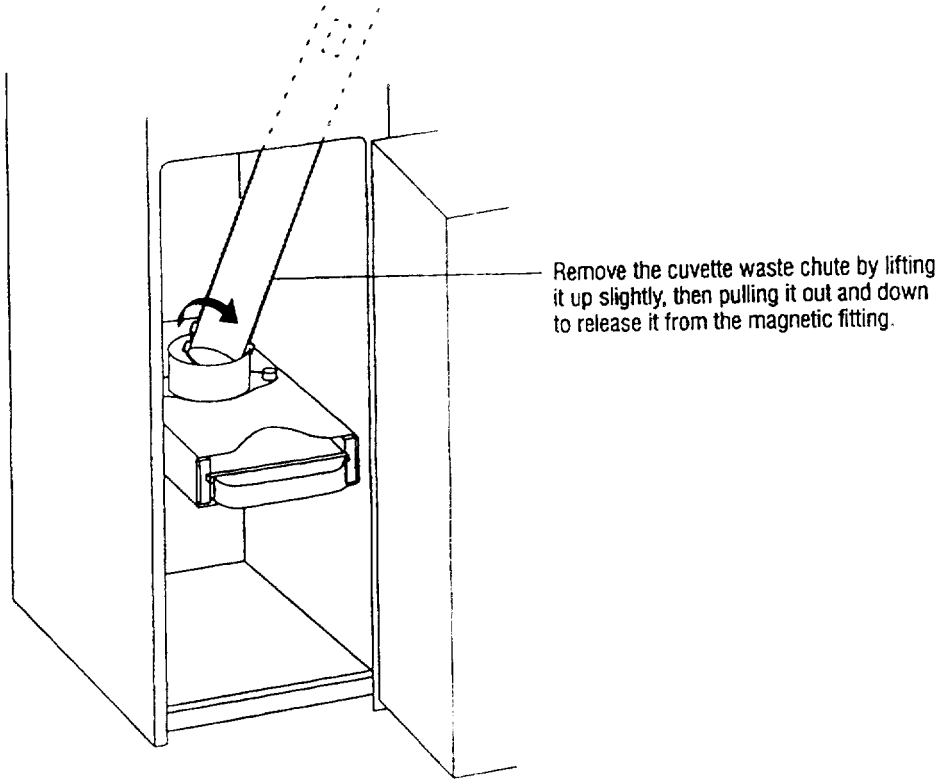

6. Clean the cuvette waste reservoir:
   a. Open the cuvette waste bin drawer.
   b. Wipe the reservoir with tissues or gauze saturated with cleaning solution.
   c. Rinse the reservoir with tissues or gauze saturated with reagent water.

207

170

d. Dry the reservoir.

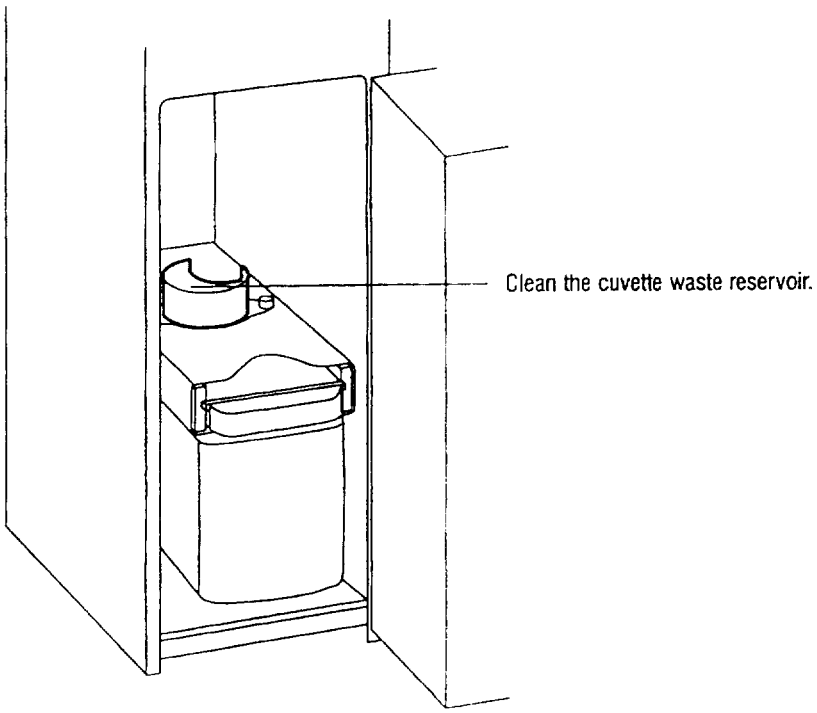

7. Clean the cuvette waste chute:
   a. Use a bottle or sponge brush to clean the chute.
   b. Rinse the chute with water.
   c. Thoroughly dry the chute.

⚠ **CAUTION:** Ensure that you do not pinch or trap cables or tubing when installing the chute.

8. Install the cuvette waste chute:
   a. Place the locator pins at the bottom of the chute in the reservoir.

208

b. Push up the top of the chute until it attaches to the magnetic fitting.

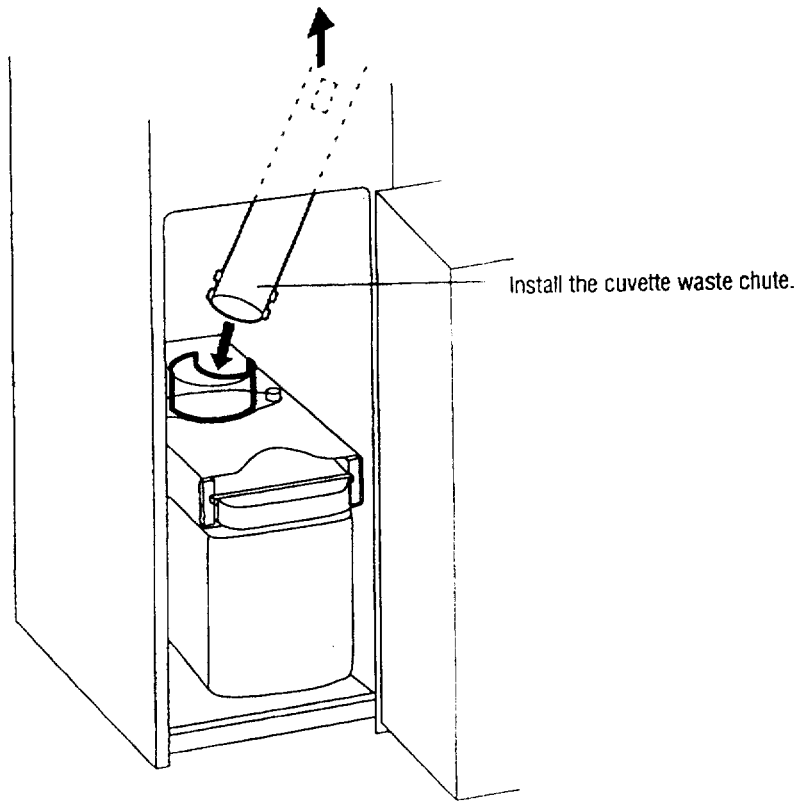

9. Install the tip tray bin.
10. Install the cuvette waste bin in the drawer and close the drawer.
11. Install the left waste door, lock the latches, and close the door.

Cleaning the Air Filter

NOTE: Ensure that the system is off by selecting System Status, and then Turn Off System.

1. Lift the top cover.
2. Remove the reagent probes cover and the panel over the water and waste module (reagent fluidics cover).

209

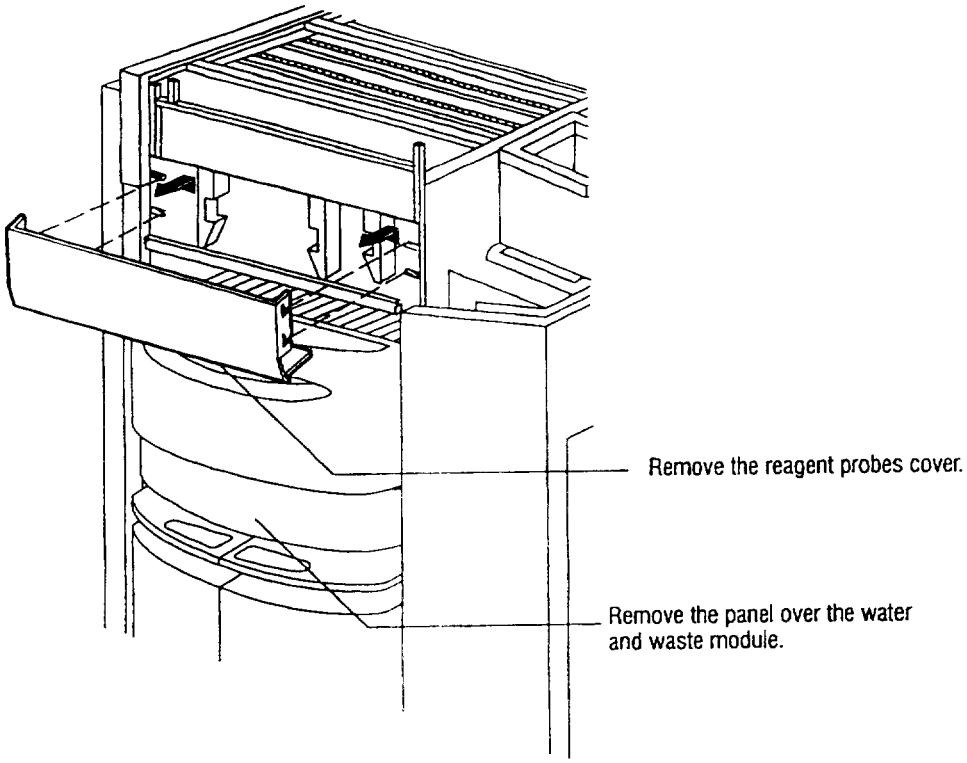

3. Remove the three screws on the back panel.
4. Carefully lift the back panel up, and then over and out to remove it.

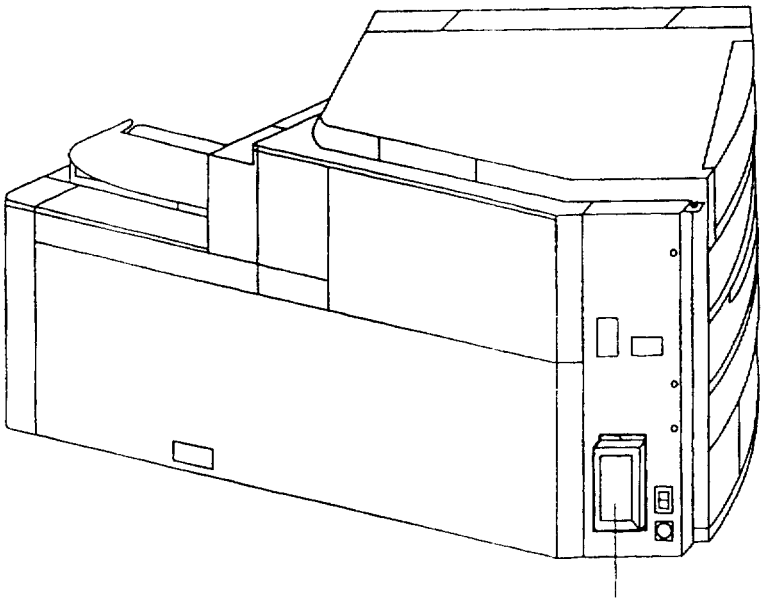

5. Pinch the air filter and remove it from the bracket.

210

CAUTION: Avoid rinsing the air filter with cleaning solution.

6. Rinse the air filter with water and allow it to dry thoroughly.

CAUTION: Do not install a wet or damp air filter.

7. Install the spare, dry air filter in the bracket.
8. Install the back panel and secure the three screws.
9. Install the reagent probes cover and the panel over the water and waste module (reagent fluidics cover).

211

As-Needed Maintenance

Use this section to replace the cleaning solution and to clean components when they are dirty.

You can clean the following components with cleaning solution:

- probe rinse stations
- reagent probe shutter
- primary reagent area and reagent slides
- covers and pointing device
- sample racks

Ensure that the system is off by selecting System Status, and then Turn Off System.

Replacing the Cleaning Solution

You can replace cleaning solution at any time.

WARNING Cleaning solution contains sodium hypochlorite. When handling cleaning solution, follow appropriate chemical safety guidelines, which include wearing gloves, protective eye shield, and a laboratory coat.

NOTE: Perform the recommended cleaning procedure using the Chiron Diagnostics Cleaning Solution for the ACS:Centaur system to achieve optimum assay and system performance. Do not use other cleaning solutions.

212

1. Open the right waste door.
2. Remove the cleaning solution bottle:

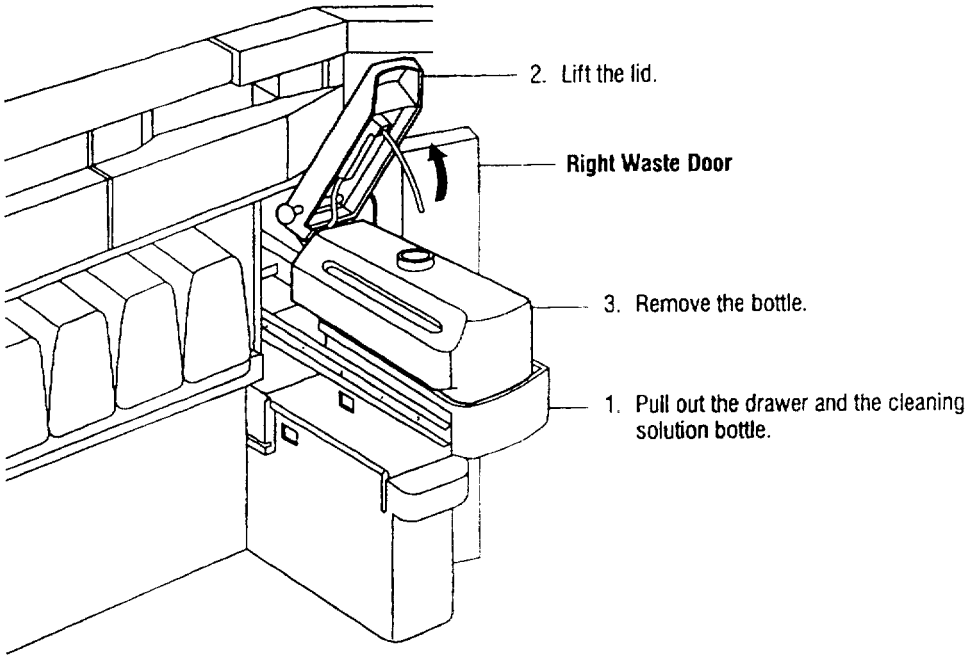

3. Remove the septum cap and empty any cleaning solution from the bottle.
4. Prepare the cleaning solution:
   a. Carefully pour a pack of concentrated Chiron Diagnostics Cleaning Solution into the cleaning solution bottle.
   b. Fill the bottle with reagent water.
   c. Place the septum cap on the bottle.
5. Install the bottle on the system.
6. Lower the lid onto the bottle, ensuring that the tubing is in the bottle.
7. Push in the drawer.
8. Close the right waste door.

Cleaning the Probe Rinse Stations

You can clean the rinse stations for the three reagent probes and the ancillary probe.

BIOHAZARD: Refer to Appendix A, *Protecting Yourself from Biohazards*, for recommended precautions when working with biohazardous materials.

WARNING The probe tips are sharp and can cause skin punctures. Be careful not to bend the probes.

213

1. Lift the top cover.
2. Use a disposable transfer pipette to add 0.5 to 1.0 mL of cleaning solution to the rinse stations.
3. Clean inside the rinse stations using a small bristle brush saturated with cleaning solution.
4. Gently insert the brush into the rinse station to a depth of 6.3 cm (2.5 in), and swirl the brush inside the rinse station.

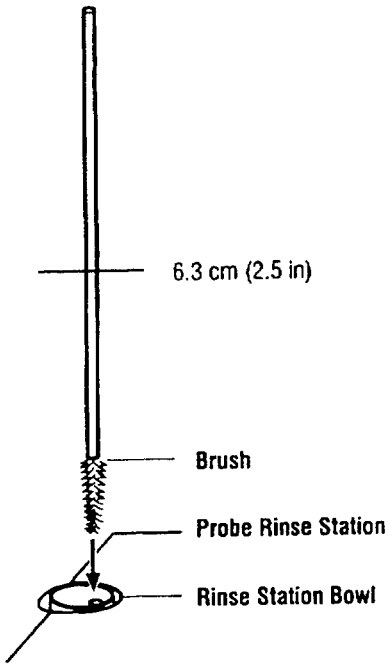

5. Remove the brush.
6. Clean the rinse station bowl.
7. Close the top cover.

Cleaning the Reagent Probe Shutter

BIOHAZARD: Refer to Appendix A, *Protecting Yourself from Biohazards*, for recommended precautions when working with biohazardous materials.

1. Remove the reagent probes cover.
2. You can push the probes toward the incubation ring.
3. Remove the reagent probe shutter:
   a. Lift the shutter drive arm up and off the shutter drive.
   b. Slide the shutter to the left until the screw slots are under the screws.

214

186

c. Lift out the shutter.

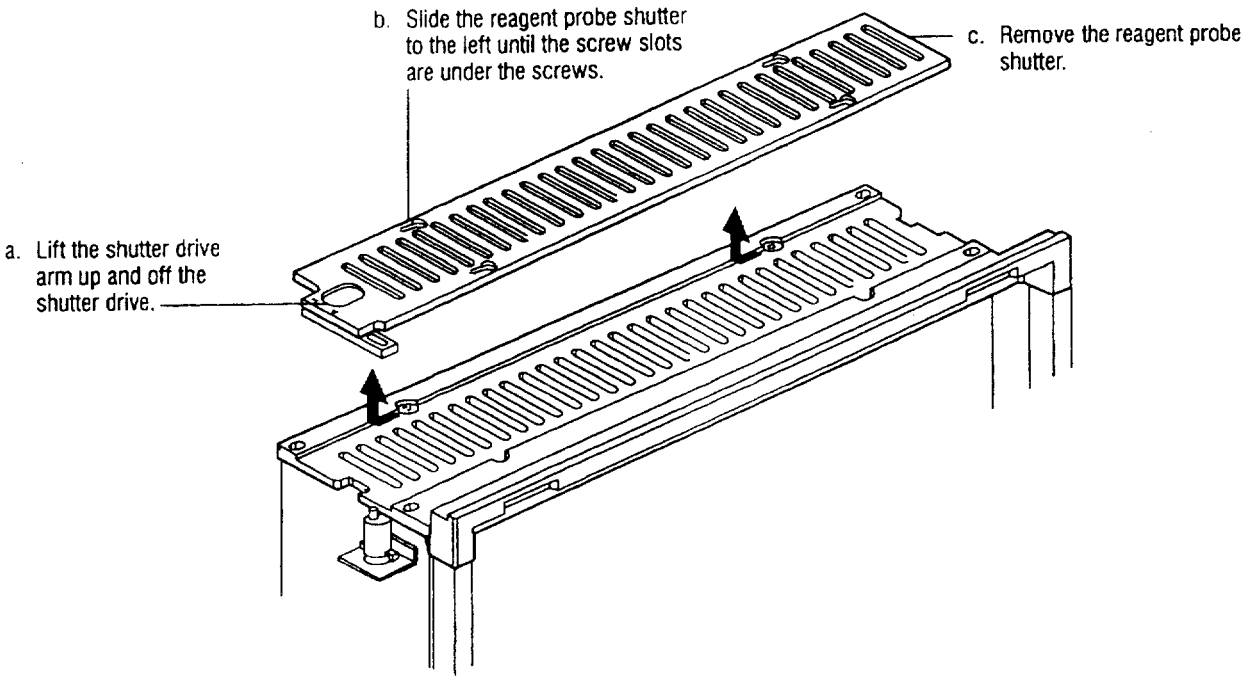

4. Clean the shutter:
   a. Soak the shutter in cleaning solution.
   b. Rinse the shutter with water.
   c. Thoroughly dry the shutter.
5. Wipe the surface under the shutter with tissues or gauze saturated with cleaning solution.
6. Wipe the surface under the shutter with tissues or gauze saturated with water.
7. Install the shutter.
8. Install the reagent probes cover.

Cleaning the Primary Reagent Compartment and Reagent Slides

BIOHAZARD: Refer to Appendix A, *Protecting Yourself from Biohazards*, for recommended precautions when working with biohazardous materials.

1. Open the primary reagent door.
2. Wipe excess water from the primary reagent compartment.

215

3. Wipe the surfaces of the primary reagent compartment with tissues or gauze saturated with cleaning solution.
4. If reagent has spilled onto the reagent slides, wipe the reagent slides with tissues or gauze saturated with cleaning solution.
5. Wipe the surfaces of the primary reagent compartment with lint-free tissues or gauze saturated with water.
6. Dry the primary reagent compartment.
7. Close the primary reagent door.

Cleaning the Covers and Pointing Device

BIOHAZARD: Refer to Appendix A, *Protecting Yourself from Biohazards*, for recommended precautions when working with biohazardous materials.

1. Carefully wipe the following components with tissues or gauze saturated with cleaning solution:
   - exterior covers
   - sample entry queue
   - sample exit queue
   - ancillary entry
   - Stat entry queue
   - pointing device
   - system fluids tray
   - tray under the system fluids reservoirs
   - tray under the water and waste bottles
2. Rinse the components with tissues or gauze saturated with water.

Cleaning the Sample Racks

BIOHAZARD: Refer to Appendix A, *Protecting Yourself from Biohazards*, for recommended precautions when working with biohazardous materials.

1. Soak the racks in cleaning solution for approximately 10 minutes.
2. Rinse the racks with water.
3. Allow the racks to dry thoroughly.
4. Ensure that each position on the rack has a clip.

210
150 219

If required, install clips in the rack.

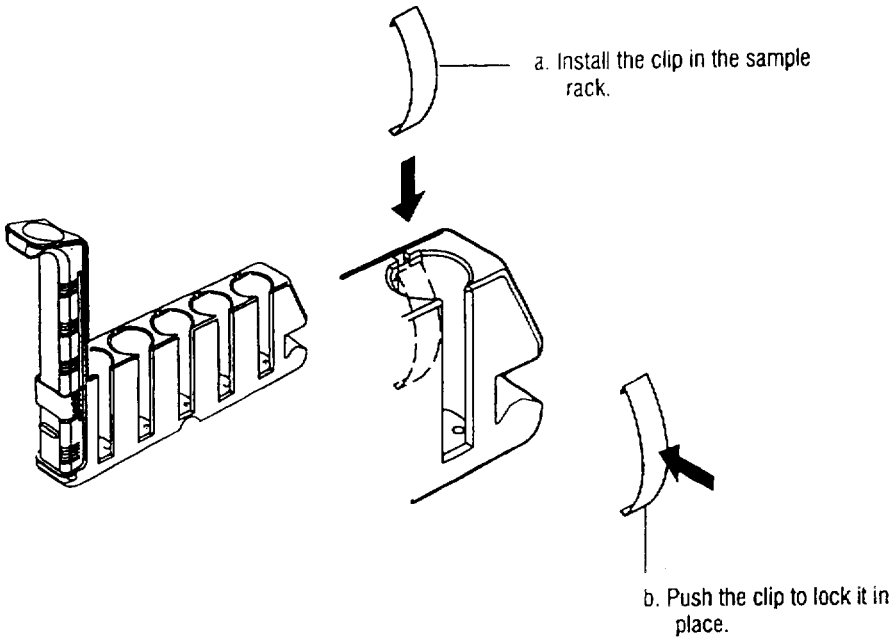

217

189

8 Troubleshooting

Investigating System Problems 8-3

Solving Event Codes 8-4

Investigating System Problems

Use this section to focus your efforts in resolving system problems.

NOTE: Component problems can affect calibrations, controls, patient results, precision, and proficiency testing.

1. Visually inspect the system.
   - Do you see evidence of leaks under or around the system? If aspirate probes 1 and 2 are reversed, then overfilling, leaks, and cuvette jams can result.
   - Do used cuvettes show complete aspiration and removal of solid pellet? A residual grey film on used cuvettes from Folate, TSH, FT4, and ThCG assays is acceptable.
   - Is there any crystallization of Base Reagent around the outside edges of the luminometer?
   - Do you see air bubbles in the tubing? Does tubing have any discoloration, obstructions, twists, crimps, nicks, severe angles, or other deformities and restrictions? Is tubing trapped between covers? Is the peristaltic pump tubing too tight, flat, or leaking?
   - Are probes clean on the outside? Are there any obstructions on the inside? Are probes straight and centered over the wash or rinse ports?
   - Do the water filters have air bubbles, debris, or leaks?
2. Select the System Status symbol and observe for patterns of red and yellow.
   - To investigate the status of system supplies, select Supplies.
   - To investigate the status of reagents, select Reagents.
   - To investigate the status of samples, select Samples.
   - To verify that the system received all required routine cleaning and maintenance, select Maintenance.
   - To view system events including errors and to access diagnostic procedures, select Event Log.
   - To perform manual operations and diagnostic tests, select Diagnostic Tools.

219

Solving Event Codes

Use this procedure to identify errors and access online information about possible causes and procedures.

1. At the Workspace, select the System Status symbol.
2. Select Event Log.

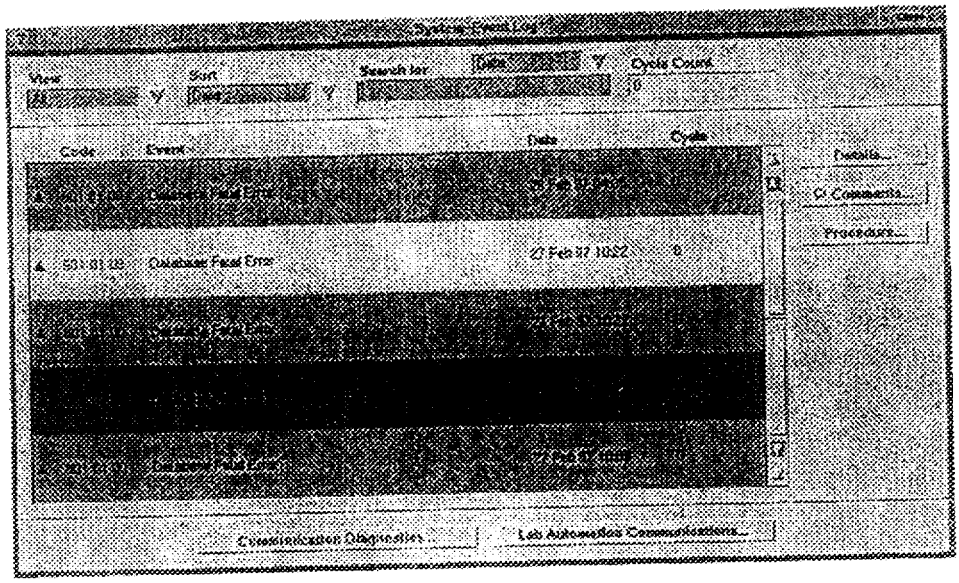

3. Select the appropriate view and complete the tasks to identify the event you want to solve.
   - To organize the events in chronological order with the most recent message at the top, select Date in Sort.
   - To organize the events by failures and warnings, select Severity in Sort.
   - To organize the events by subsystem, select Subsystem in Search.
   - To display a specific event code, select Event Code in Search, and then enter the event code.
4. Locate the possible causes and corrective action procedures for the error.
   a. Select Procedure.
   b. Select **Search** from the online information window.
   c. Enter the event code. **Enter**.
   d. Select **Enter**.
5. Perform the appropriate procedure.

   You can access detailed procedures and illustrations by selecting Procedure.
6. If the procedure does not correct the problem or if the problem occurs again, call Chiron Diagnostics.

9 Setup

Defining Test Options 9-3
Modifying Test Definitions 9-3
Modifying Reference Ranges 9-4
Defining Test Profiles 9-5
Defining Ratio Tests for Calculated Parameters 9-6
Defining Off-System Tests 9-7

Selecting Sample Handling Options 9-8
Selecting Sample Identification 9-8
Selecting Sample Aspirations 9-8
Selecting Sample Tube Types 9-8
Defining Repeats 9-9

Adjusting the Time 9-10

Defining Printing Options 9-11
Selecting a Printer 9-11
Selecting Paper Size 9-11
Entering a Report Header 9-12

Defining System Passwords 9-13

Defining Sample Barcode Options 9-14
Selecting the Barcode Symbology and Format 9-14
Defining Custom Barcode Labels 9-14

Defining LIS Communication Options 9-16

Defining Test Options

You can define and modify test options for the ACS:Centaur system:

- test definitions
- reference ranges
- test profiles
- ratio tests for calculated parameters
- off-system tests

Modifying Test Definitions

NOTE: Some tests have parameters that you cannot edit.

1. At the workspace, select **Setup**.
2. Select **Test Summary**.
3. Select a test.
4. Select **Definition**.
5. Select **Edit**.
6. Complete the appropriate tasks.

If you want to . . .	*Then . . .*
enter the test name that displays at the Worklist–Schedule window	enter the name in **Display**.
enter the test name on printed reports	enter the name in **Print**.
enter the LIS code for the test	enter the LIS code in **LIS Code**.
use a reagent beyond its expiration date	select **Use Beyond** or **Do Not Use Beyond** in Opened Stability.
enter the number of replicates for a patient or a control	select a number from 1 to 3 in **Replicates**.
review results before the system reports results	select **Hold** for Sample Repeat.
report a result without reporting the patient name or PID	select **Anonymous**.

329

1 of 2

If you want to . . .	*Then . . .*
edit qualitative result definitions	select **Result Calculation.**
enter the original system values for the definitions	select **Reset Defaults.**
enter the type of pack	select a type in **Pack Type.**

7. Select **Save.**

Modifying Reference Ranges

NOTE: Some tests have parameters that you cannot edit.

1. At the workspace, select **Setup**.
2. Select **Test Summary.**
3. Select a test.
4. Select **Ranges.**
5. Select **Edit.**
6. Complete the appropriate tasks.

If you want to enter or edit . . .	*Then . . .*
name of the range	enter the name in **Range.**
low limit or high limit for a reference range, check range, or linearity	a. Enter the low limit in **Low Limit.** b. Enter the high limit in **High Limit.**
gender	select either **M** for male or **F** for female.
age	enter the youngest age on the left and the oldest age on the right.
automatically scheduled tests or profiles for low or high results	select **Reflex Tests.**
more restrictive values for Check Range or Linearity	enter more restrictive values in **Check Range** or **Linearity.**
whether to repeat tests with results outside the Check Range or the Linearity range limits	select **Repeat if** < or **Repeat if** >.

195

223

If you want to enter or edit . . .	*Then . . .*
low limit, below which the system reschedules the test	a. Select **Repeat if** < (less than) **Conc Range**. b. Enter a value in **Dilution Point**. c. Select a factor in **Dilution**.
high limit, above which the system dilutes and reschedules the test	a. Select **Repeat if** > (greater than) **Conc Range**. b. Enter a value in **Overdilution Point**.

7. You can reset the parameters to the default values:
   a. Select **Reset Defaults**.
   b. Select an option:
      - **All** to reset all ranges and parameters to the default values
      - **Ranges** to reset the ranges to the default values
8. You can display or edit the limits of the ranges for reflex tests:
   a. Select **Reflex Tests**.
   b. Select an option for a range:
      - **Schedule if** < to schedule the selected test if the result is less than the low limit of the range
      - **Schedule if** > to schedule the selected test if the result is greater than the high limit of the range
   c. Select **Continue**.
9. Select **Save**.

Defining Test Profiles

1. At the workspace, select **Setup**.
2. Select **Profile Summary**.
3. Select **Profile Definition**.
4. Select **Add Test Profile**.
5. Enter the name of the test profile in **Profile**.
6. You can enter the LIS Code in **LIS Code**.
7. Select the tests that you want the profile to include.
8. Select **Save**.

2241

146

Defining Ratio Tests for Calculated Parameters

You can define the ratio tests for calculated parameters such as Free Thyroxine Index (FTI) and Red Blood Cell Folate (RBC Folate). The ACS:Centaur system calculates the FTI index and RBC folate values using direct measurement, equations, and off-system tests.

1. At the workspace, select **Setup**.
2. Select **Test Summary.**
3. Select **Add Ratio.**
4. Select **Edit.**
5. Complete the appropriate tasks.

If you want to . . .	*Then . . .*
enter the name	enter the name in **Test**.
enter the LIS code for the test	enter the LIS code in **LIS Code.**
review the result before the system reports the result	select **Hold**.
enter the units	select or enter a unit of measure in **Units.**
enter the number of decimal places	select a number of decimal places from 0 to 3 in **Decimal**.
enter a reference range	a. Enter the low limit in **Low Limit.** b. Enter the high limit in **High Limit.** A flag appears with results beyond the reference range.
enter a ratio definition or calculation formula	select or enter the formula (without spaces) in **Formula**: + to add – to subtract * to multiply / to divide (and) to specify order of calculations, using up to 4 sets
enter a variable for each letter in the formula	select a variable in **Variable**.

228

121

6. Select **Save**.

Defining Off-System Tests

An off-system test is a test that the ACS:Centaur system does not perform, but can report. You can define the tests that are required for ratio test definitions but are not performed by the ACS:Centaur system. Off-system test results can also appear on collated reports.

1. At the workspace, select **Setup**.
2. Select **Test Summary**.
3. Select **Add Off-System**.
4. Select **Edit**.
5. Complete the appropriate tasks.

If you want to . . .	*Then . . .*
enter the name	enter the name in **Test**.
enter the LIS code for the test	enter the LIS code in **LIS Code**.
review the result before the system reports the result	select **Hold**.
enter the units	select or enter a unit of measure in **Units**.
enter the number of decimal places	select a number of decimal places from 0 to 3 in **Decimal**.
enter a reference range	a. Enter the low limit in **Low Limit**. b. Enter the high limit in **High Limit**. A flag appears with results beyond the reference range.

6. Select **Save**.

226

Selecting Sample Handling Options

You can select several sample handling options:

- sample identification
- optimization of sample aspiration
- sample tube types
- repeats

Selecting Sample Identification

1. At the workspace, select **Setup**.
2. Select **Summary**.
3. Select **Barcode & Tube Type**.
4. Select **SID & Rack ID** or **Rack ID Only**.
5. Select **Save**.

Selecting Sample Aspirations

You can optimize the sample aspiration:

- to optimize throughput or to run tests in the order of detection
- to maximize the number of completed tests or to maximize the usable volume in the sample cup

1. At the workspace, select **Setup**.
2. Select **Summary**.
3. Select **Sample Handling**.
4. Select **In Random Access with Optimized Throughput** or **In the Order the System Detects Samples** in Run Tests.
5. Select **To Maximize the Number of Tests Completed** or **To Maximize the Usable Volume** in Run Samples.
6. Select **Save**.

Selecting Sample Tube Types

You can select four types of sample tubes to use on the system. Each rack holds five sample tubes of the same type.

1. At the workspace, select **Setup**.

227

144

2. Select **Summary.**
3. Select **Barcode & Tube Type.**
4. Select up to four types of sample tubes.
5. Select **Save.**

Defining Repeats

You can set up the system to hold samples and perform repeats, or to remove samples and reload repeats. You can also set up the system to repeat a test if the system detects a short sample or a clot.

1. At the workspace, select **Setup.**
2. Select **Summary.**
3. Select **Sample Handling.**
4. Complete the appropriate task.

If you want to . . .	*Then select . . .*
repeat the test for an insufficient sample	**Repeat if Insufficient Sample is Detected.**
repeat the test when the system detects clots	**Repeat if Clot is Detected.**
hold samples and perform repeats	**Hold All Samples for Repeat & Reflex Tests.**
remove samples and reload repeats	**Operator Loads Samples for Repeat & Reflex Tests.**

5. Select **Save.**

Adjusting the Time

Use this procedure to adjust the time. The calendar and clock are powered by a long-life battery in order to maintain the correct date and time even if the power is turned off.

1. At the workspace, select **Setup**.
2. Select **Summary**.
3. Select **Additional Options**.
4. Enter the number of minutes to adjust the time in **Time Correction**.
5. Select **Save**.

Defining Printing Options

You can select among several types of printers and two standard paper sizes. You can also add a header that prints on the reports.

Selecting a Printer

1. At the workspace, select **Setup**.
2. Select **Summary**.
3. Select **Print Options**.
4. Select a printer in **Printer**.
5. Select **Save**.

Selecting Paper Size

1. At the workspace, select **Setup**.
2. Select **Summary**.
3. Select **Print Options**.
4. Select a paper size:
   - US letter (21.6 x 27.9 cm, or 8.5 x 11 in)
   - A4 letter (21.1 x 29.2 cm, or 8.313 x 11.5 in)
5. Select **Save**.

Entering a Report Header

1. At the workspace, select **Setup**.
2. Select **Summary**.
3. Select **Print Options**.
4. Enter the header you want to appear on reports in **Report Header**.
   You can enter up to 80 characters and you can have up to six lines of text.
5. Select **Save**.

Defining System Passwords

You can assign operator passwords and functions for two levels of security. Operators in the general class have no passwords.

1. At the workspace, select **Setup**.
2. Select **Summary.**
3. Select **Security.**
4. Enter a password for User 1 or User 2.
5. Select a function and a class.
6. Select **Save.**

232

Defining Sample Barcode Options

You can select up to four barcode symbologies to use in your laboratory with patient sample barcodes. For most symbologies, you can select the following:

- the format
- whether to use check digits at the end of the barcode
- whether to use the SID mapping option

NOTE: Code 128 is always active.

Selecting the Barcode Symbology and Format

1. At the workspace, select **Setup**.
2. Select **Summary**.
3. Select **Barcode & Tube Type**.
4. Select a barcode symbology.
5. Select **Fixed** or **Variable** in Type.
6. Enter the number of characters in **Length** for a barcode of fixed length.
   Enter **0** (zero) for a barcode of variable length.
7. Select **Check Digit** if the barcode uses a check digit.
8. Select **Save**.

Defining Custom Barcode Labels

If your laboratory creates its own barcode labels, use this procedure to specify the characters in the patient sample barcode that you want the ACS:Centaur system to read as the SID code. The ACS:Centaur system accepts SID codes up to 13 characters long. If the SID code is embedded in a longer barcode, use the SID mapping option to specify the characters of the SID code.

The SID mapping option affects patient sample barcode labels. This option does not affect the barcode labels for ACS controls, ACS calibrators, or ACS ancillary reagents.

NOTE: If you are using Code 128, you must exclude the ASCII characters ESC, Bell, and CR (Return) from your SID codes because they are reserved for use in the ACS calibrator and control barcode labels.

1. At the workspace, select **Setup**.
2. Select **Summary**.

233

V V75

3. Select **Barcode & Tube Type.**
4. Select a barcode symbology.
5. Select **Fixed** or **Variable** in Type.
6. Enter the number of characters in Length for a barcode of fixed length.
   Enter **0** (zero) for a barcode of variable length.
7. Select **Check Digit** if the barcode uses a check digit.
8. Define the SID code by selecting 13 characters to appear as an SID in the worklist.
9. Select **Save.**

234

Defining LIS Communication Options

You can configure the communication options for the ACS:Centaur system and your LIS to automatically transfer worklist requests and results to and from an LIS.

To automatically transfer worklist requests and results, your laboratory can use barcoded samples or transfer the information using the rack ID. Your LIS must support the options that you select on the ACS:Centaur system.

1. At the workspace, select **Setup**.
2. Select **Summary**.
3. Select **LIS Communication**.
4. Select the options for your LIS:
   - Select **ASTM** in Protocol.
   - Select the baud rate.
   - Select the data bits.
   - Select the stop bits.
   - Select the parity.
   - Enter the system ID.
   - Enter the LIS ID.
   - Enter the timeout in seconds for no response, interframe, query, and connection delay.
5. Select the options that you want the ACS:Centaur system to perform:
   - System automatically queries the LIS for requests
   - System automatically sends all results to the LIS except results on hold
   - Collate patient results before sending to the LIS
   - Send and receive Rack IDs
   - Remove leading spaces from SIDs
   - Error detection
6. Select **Save**.

Appendixes

Page

Appendix A: Protecting Yourself from Biohazards **A-1**

Appendix B: Services and Supplies **B-1**

Addresses and Communication Numbers B-1

Standard Instrument Warranty and Service Delivery Policy B-3

- Warranty Period B-3
- Warranty Service During Normal Hours B-3
- Extent of a Warranty Service Call B-3
- Warranty Service Outside Normal Hours B-4
- Replacement of Parts B-4
- Design Changes and Retrofitting of Instruments B-4
- Key Operator Designation B-4
- OSHA Requirements (US only) B-4
- Warranty Exclusions B-5
- Limitations of Chiron Diagnostics's Original Warranty B-6

Supplies and Accessories B-6

Appendix C: Preinstallation Site Requirements **C-1**

Instrument C-1

Water Supply C-1

Drainage System C-2

Delivery C-2

Communications C-2

Environment C-2

Appendix D: Installing and Relocating **D-1**

Appendix E: Reagents and Water Quality **E-1**

System Reagents E-1

Reagent Water Quality E-1

- Introduction E-1
- What is Reagent Water? E-2
- Purifying Water E-3

236

205

Maintaining Water Quality E-3
Problems Caused by Water E-5

Appendix F: Specifications **F-1**
Dimensions F-1
Microprocessor (CPU) Specifications F-1
Printer Specifications F-2
Environmental Specifications F-2
Outputs F-2
Luminometer Specifications F-2
Electrical Ratings and Power Requirements F-3
Primary Sample Tube Specifications F-3
Sample Transfer Cups and Tubes Specifications F-4
Microsample Containers Specifications F-4

Appendix G: System Symbols **G-1**

Appendix H: References **H-1**

237

Appendix A: Protecting Yourself from Biohazards

This appendix summarizes the established guidelines for handling laboratory biohazards. This summary is based on the guidelines developed by the National Institutes of Health (NIH), the Centers for Disease Control (CDC), and the NCCLS Document M29, Protection of Laboratory Workers from Infectious Disease Transmitted by Blood and Tissue.[7]

Use this summary for general information only. It is not intended to replace or supplement your laboratory or hospital biohazard control procedures.

By definition, a biohazardous condition is a situation involving infectious agents biological in nature, such as the hepatitis B virus, the human immunodeficiency virus (HIV), or the tuberculosis bacterium. These infectious agents may be present in human blood and blood products and in other body fluids.

The major sources of contamination when handling potentially infectious agents are:

- hand-to-mouth contact
- hand-to-eye contact
- direct contact with superficial cuts, open wounds, and other skin conditions that may permit absorption into subcutaneous skin layers
- splashes or aerosol contact with skin and eyes

To prevent accidental contamination in a clinical laboratory, strictly adhere to the following procedures:

- Wear gloves while servicing parts of the instrument that have contact with body fluids such as serum, plasma, urine, or whole blood.
- Wash your hands before going from a contaminated area to a noncontaminated area, or when gloves are removed or changed.
- Perform procedures carefully to minimize aerosol formation.
- Wear facial protection when splatter or aerosol formation are possible.
- Wear protective clothing such as lab coats or aprons when working with possible biohazard contaminants.
- Keep your hands away from your face.
- Cover all superficial cuts and wounds before starting any work.
- Dispose of contaminated materials according to your laboratory's biohazard control procedures.
- Keep your work area disinfected.
- Disinfect tools and other items that have been near any part of the instrument sample path or waste area with 15% v/v bleach.

238

✓10

- Do not eat, drink, smoke, or apply cosmetics while in the laboratory.
- Do not mouth pipet any liquid, including water.
- Do not place tools or any other items in your mouth.
- Do not use the biohazard sink for personal cleaning such as rinsing coffee cups or washing hands.

To prevent needlestick injuries, needles should not be recapped, purposely bent, cut, broken, removed from disposable syringes, or otherwise manipulated by hand.

Appendix B: Services and Supplies

This section provides information for contacting Chiron Diagnostics and for ordering supplies.

Addresses and Communication Numbers

For ordering accessories and supplies within the United States, call toll free, 1-800-255-3232.

For technical information, and service and repair information within the United States, call toll free, 1-800-255-2121.

Australia:
Australian Diagnostics Corporation Pty. Ltd.
2 Keith Campbell Court
Scoresby, Victoria 3179
Tel: 61-3-9212-8444
Fax: 61-3-9212-8445

Austria:
Ciba Corning Diagnostics GmbH
Traunstr. 46
5026 Salzburg
Tel: 43-662-288110
Fax: 43-662-288119

Belgium:
Ciba Corning Diagnostics s.a./n.v.
Excelsiorlaan 49
B-1930 Zaventem
Tel: 32-2-7207120
Fax: 32-2-7211212

Canada:
Ciba Corning Canada Inc.
90 Gough Road, Unit #1
Markham, Ontario, L3R 5V5
Tel: 905-475-2220
Fax: 905-475-2145

France:
Ciba Corning Diagnostics S.A.
B.P. 109, Parc des Bellevues, Eragny
95613 Cergy Pontoise Cedex
Tel: 1-34-40-40-00
Fax: 1-34-40-40-91

Germany:
Ciba Corning Diagnostics GmbH
Siemensstrasse 3
D-35463 Fernwald
Tel: 0641-4003-0
Fax: 0641-4003111

Hong Kong:
Ciba Corning Diagnostics (H.K.) Limited
20/F Gee Chang Hong Centre
65 Wong Chuk Hang Road
Tel: 852-2814-7337
Fax: 852-2873-4245
Telex: 74673 CCD HX

Italy:
Ciba Corning Diagnostics S.p.A.
Via Roma, 108-Palazzo E
20060 Cassina de' Pecchi (MI)
Tel: 02-95455.1
Fax: 02-95300419

240

Japan:
Ciba Corning Diagnostics KK
Unosawa Tokyu Building 3F
1-19-15, Ebisu
Shibuya-Ku,
Tokyo 150
Tel: 03-3440-2411
Fax: 03-3440-6999

Korea:
Ciba Corning Korea Ltd.
Kye Myung Building (4F)
Myungil Dong 48-7
Kangdong-Gu
Seoul 134 070
Tel: 82-2-428-5980/8
Fax: 82-2-428-5989

Mexico:
Ciba Corning Diagnostics de Mexico SA de CV
Av. Periferico Sur No. 6677
Col. Ejidos de Tepepan
Xochimilco, Mexico D.F., C.P. 16018
Tel: 525-641-3815
Fax: 525-641-3440

Netherlands:
Ciba Corning Diagnostics N.V.
Peppelkade 64 D/E
Postbus 111
3990 DC Houten
Tel: 31-3403-50750
Fax: 31-3403-51041

*Use for U.S. produced and distributed products only.

Spain:
Ciba Corning Diagnostics S.A.
Edificio Dublin
Parque Empresarial San Fernando
28831 Madrid
Tel: 341-677-5545
Fax: 341-677-6871

Switzerland:
Ciba Corning Diagnostics AG
Neue Winterthurerstrasse 15
CH-8305 Dietlikon
Tel: 01-833-27-27
Fax: 01-833-62-31

United Kingdom:
Ciba Corning Diagnostics Limited
Colchester Road
Halstead, Essex, CO9 2DX
Tel: 01787-472461
Fax: 01787-475088

United States:
Worldwide Corporate Headquarters
Ciba Corning Diagnostics Corp.
63 North Street
Medfield, MA 02052
Tel: 508-359-7711
800-255-3232
Fax: 508-359-3599

*United States:
U.S. Group Headquarters
Ciba Corning Diagnostics Corp.
115 Norwood Park South
Norwood, MA 0206
Tel: 800-255-3232 (ordering)
800-255-2121 (24-hour technical assistance)
Fax: 617-551-7779

244

2/13

Standard Instrument Warranty and Service Delivery Policy

Chiron Diagnostics and its authorized distributors provide customers who acquire new Chiron Diagnostics instruments with a one-year comprehensive, but limited, warranty. This limited warranty is designed to protect customers from the cost associated with repairing instruments that exhibit malfunctions due to defects in materials and/or workmanship during the warranty period.

Warranty Period

The warranty period commences upon installation at the customer's location and extends for a period of one year thereafter. The customer, with some exceptions, may purchase additional service coverage beyond the one year warranty period as part of the original instrument acquisition for second or subsequent years beyond the original installation date. The customer's original Purchase Invoice or appropriate Agreement Addendum must indicate the term in months for additional service coverage.

Warranty Service During Normal Hours

The customer may obtain warranty service for instruments during normal business hours by contacting the Chiron Diagnostics location or authorized distributor. Refer to the list of Chiron Diagnostics locations in this section.

Extent of a Warranty Service Call

During the warranty period, Chiron Diagnostics or an authorized distributor will repair the system during normal business hours, at their expense, subject to the exclusions listed below. Chiron Diagnostics or an authorized distributor will initiate a warranty field service call when notified. The call will be considered complete when the instrument is repaired and the customer, or the customer's representative, agrees the system is operating to specifications by signing the appropriate Field Service Report. When service is complete, the customer will receive a copy of the Field Service Report detailing all work performed by the Chiron Diagnostics representative.

Warranty Service Outside Normal Hours

Customers, with some exceptions, may also request warranty service to be delivered outside of normal business hours, including evenings, weekend days, or nationally observed holidays by contacting the Chiron Diagnostics location or authorized distributor. Warranty service performed at these times is subject to a surcharge unless the customer has purchased a service product option that provides warranty service outside normal hours.

Replacement of Parts

In performing warranty service under this agreement, Chiron Diagnostics or its authorized distributors will provide appropriate parts to repair the instrument at no charge with the exception of certain parts or subassemblies that are considered customer maintenance items. Customer maintenance items include, but are not limited to, the following items: lamps, electrodes or sensors (which are covered by a separate warranty), reagents, calibrators, controls, paper, and pens. Consult the appropriate operator's manual for a complete list of maintenance items for any specific model of instrument.

Design Changes and Retrofitting of Instruments

During the warranty period, Chiron Diagnostics reserves the right to change the design or construction of specific models of instruments without incurring any obligation to make such changes available to an individual instrument. If Chiron Diagnostics notifies customers of a change that improves the performance or reliability of their instrument, and requests to retrofit that instrument, customers must agree to allow Chiron Diagnostics or an authorized distributor, at Chiron Diagnostics's expense, to retrofit components or make design changes, which will not adversely affect the instrument's performance characteristics.

Key Operator Designation

Customers will designate a key operator who will be available to Chiron Diagnostics representatives to describe instrument malfunctions by telephone and/or to perform simple adjustments and corrections as requested. If a key operator is not designated or is unavailable when the customer requests service, the delivery of warranty service may be delayed.

OSHA Requirements (US only)

When service is required at a customer location, the customer must provide the Chiron Diagnostics representative with adequate facilities that comply with the regulations of the Secretary of Labor under the Occupational Safety and Health Act (OSHA) of 1970, as amended.

243

Warranty Exclusions

Chiron Diagnostics or its authorized distributors will provide warranty service to customers during the warranty period, which includes appropriate parts, travel to the location of the instrument, and on-site labor during normal business hours. In addition, Chiron Diagnostics or its authorized distributors will provide warranty service during the warranty period only, and instrument repairs, labor, or replacement parts, as provided during the original warranty period, will not extend the original warranty period.

This warranty will not apply if any of the following events occur:

1. Repairs or modifications have been made to the instrument by someone other than an authorized Chiron Diagnostics representative.
2. The instrument has been operated using accessories and supplies other than Chiron Diagnostics brand accessories, or consumable supplies and/or reagents not having the same grade, quality, and composition as defined in the system operator's manuals.
3. The instrument has not been installed within 90 days of shipment to the customer's facility unless otherwise specified.
4. The customer has not performed appropriate customer maintenance procedures, as outlined in the instrument operator's manual.
5. The instrument has been misused or used for a purpose for which it was not intended.
6. The instrument has been damaged in transit to the customer or damaged by the customer while moving or relocating it without supervision by a Chiron Diagnostics representative.
7. Damage was caused by floods, earthquakes, tornados, hurricanes or other natural or man-made disasters.
8. Damage was caused by Acts of War, vandalism, sabotage, arson, or civil commotion.
9. Damage was caused by electrical surges or voltages exceeding the tolerances outlined in the system operator's manuals.
10. Damage was caused by water from any source external to the instrument.
11. The customer has purchased an alternative agreement whose terms of warranty supersede this agreement.

Chiron Diagnostics or its authorized distributors will invoice customers, at current standard labor and parts rates, for instruments repaired to correct damage or malfunctions due to any of the reasons listed above.

244

Limitations of Chiron Diagnostics's Original Warranty

Chiron Diagnostics warrants to all customers that service will be performed in a professional manner consistent with the industry. If the instrument is not performing according to its specifications, Chiron Diagnostics will, at its option, repair or replace the instrument. This is the customer's sole and exclusive remedy for breach of warranty.

Other than as stated above, there are no other warranties, express or implied, accompanying either the leasing of the equipment or its sale to the customer at the expiration or termination of this agreement. In addition, the warranties of merchantability and fitness for a particular purpose are disclaimed. In addition, Chiron Diagnostics shall not be liable for any damages caused by delay in providing repair service from any cause. Chiron Diagnostics's liability for breach of this warranty shall be limited to the repair or replacement of defective equipment and shall not include any incidental, contingent, or consequential damages.

Supplies and Accessories

A list of supplies and accessories will be provided to the customer with catalog numbers to assist in the ordering process.

Appendix C: Preinstallation Site Requirements

A Field Service Engineer (FSE) will conduct a site inspection at your site prior to installing an ACS:Centaur system. During the inspection the FSE ensures requirements are met. Areas that are addressed during the site inspection are listed below.

Instrument

- Power Source
- Grounding
- Ambient Temperature
- Relative Humidity
- Work Area
- Flooring
- Special Ventilation
- Service Area
- Power Consumption
- Cycle per Second
- Minimum Amp Protection
- Socket Type

Water Supply

- Reagent Water Type
- Outlet Location
- Outlet Connection
- Temperature
- Pressure/Flow
- Degassing

246

Drainage System

- Drain Port Inlet
- Drain Port Opening
- Drain Port Height

Delivery

- Access Ways and Openings
- Turning Radius
- Special Equipment
- Elevator Capability
- Facility Modification

Communications

- Telephone Line
- LIS Connection and Cables
- Modem

Environment

The environment must be free of the following elements:

- Electrical Fields
- High Frequency Emissions
- Intense Magnetic Fields
- Drafts
- Direct Sunlight
- Dust
- Corrosive Gasses
- Flammable Gasses
- Vibration
- Radiation Sources
- Radio Fields

Appendix D: Installing and Relocating

CAUTION: An authorized Chiron Diagnostics Field Service Representative should install or relocate your systems. Unauthorized installation or movement can damage your systems and void your warranty and/or service contract.

Contact Chiron Diagnostics when you receive your systems or if you need to relocate your systems within your facility. Call toll free, 1-800-255-2121.

248

Appendix E: Reagents and Water Quality

System Reagents

The reagents described in Table E-1 are for In Vitro Diagnostic Use only. Use the reagents until the expiration date stated on the bottle labels. Dispose of Acid and Base reagents using disposal techniques for nonhazardous liquid wastes.

Chiron Diagnostics is not responsible for the performance of the ACS:Centaur system when reagents other than Acid and Base reagents are used.

WARNING Avoid contact of Acid and Base reagents with skin and eyes. Wash hands thoroughly after handling the reagents. If contact with eyes occurs, flush the area with water. If reagent is ingested, call a physician immediately.

Table E-1. System Reagents

Name	Volume	Active Ingredients	Storage
Acid Reagent	1.5L 5000 tests/bottle	5% hydrogen peroxide 0.1N nitric acid	room temperature (18 – 25°C)
Base Reagent	1.5L 5000 tests/bottle	0.25N sodium hydroxide, surfactant	room temperature (18 – 25°C)
Wash 1, Wash 2 Solution	1.5L	phosphate buffered saline, pH 7.2	room temperature (18 – 25°C)
Cleaning Solution	1.5L	0.26% sodium hypochlorite	room temperature (18 – 25°C)

Reagent Water Quality

Introduction

Water quality is an important consideration in the laboratory because it can significantly affect the outcome of laboratory procedures and the measurement of patient samples.[7,8]

This overview discusses reagent water quality guidelines as specified by the National Committee for Clinical Laboratory Standards (NCCLS).[9] Use these guidelines to evaluate the reagent water quality in your laboratory and to determine the best method for obtaining the water quality you need.

249

221 250

Good laboratory practices suggest that you establish a protocol that supports the manufacturer's requirements for the instrument to:

- insure optimum performance of automated laboratory instruments
- eliminate water quality as a source of problems when troubleshooting
- help you to meet requirements for state and federal laboratory certification

What is Reagent Water?

Reagent water is laboratory water that meets specifications for clinical laboratory use.

The NCCLS has defined three grades of reagent water:

- Type I, the highest grade
- Type II, the intermediate grade
- Type III, the lowest grade

Table E-2 lists the NCCLS specifications for the three types of reagent water. Use this information to determine the water quality in your laboratory. Refer to the NCCLS guidelines for common laboratory uses of Type I, Type II, and Type III reagent water.

Table E-2. Reagent Water Specifications

Specification	Type I	Type II	Type III
Maximum bacterial content colony forming units per mL (CFU/mL)*	10 (preferably bacteria free)	1000	not applicable
pH	not applicable	not applicable	5.0–8.0
Minimum resistivity (megohm/cm at 25°C)†	10 (inline measurement by sensor or resistor)	1.0	0/1
Maximum silicate (mg/L)‡	0.05	0.1	1.0
Particulate matter (µm)§	smaller than 0.22 µm	not applicable	not applicable
Organic compounds**	pretreat with activated carbon	not applicable	not applicable

* Bacterial content: The number of colony forming units in water. Bacterial content is a water contaminant you measure to determine water quality.

† Resistivity: The ability of water to resist electrical conduction due to the ion content. Resistivity is the standard test measurement for determining water quality. The higher the resistivity, the lower the ion content and the better the water quality.

250

‡ Silicates: Compounds you remove to produce Type I reagent water.

§ Particulate matter: Water is passed through a 0.22 µm filter, and undissolved (insoluble) substances larger than 0.22 µm are removed by the filter.

‖ Organic compounds: Compounds you remove to produce Type I reagent water.

Purifying Water

As with all diagnostic testing procedures, good laboratory practices suggest that you establish a protocol that supports the manufacturer's requirements for selecting the appropriate type of reagent water. You can then produce reagent water in your laboratory by setting up and maintaining a water purification system that uses one or more of the typical laboratory water purification methods described in Table E-3.

Table E-3. Water Purification Methods

Method	Description
Distillation	Changes water from liquid to vapor and leaves behind impurities such as particulates and bacteria
Deionization	Uses synthetic resins to remove ionized impurities by ion exchange
Reverse Osmosis	Forces water under pressure through a semipermeable membrane to remove dissolved solids and organic impurities
Adsorption	Uses activated carbon, clays, silicates, or metal oxides to remove organic impurities
Filtration	Forces water through a semipermeable membrane to remove insoluble matter, emulsified solids, pyrogens, and microorganisms

The quality of the reagent water you produce depends on the quality of the water you start with (source water) and the performance of your water purification system.

To produce the type of water you require, you may need a purification system that uses a combination of methods. For example, if you want to produce Type I water, you need a system that uses adsorption to remove organic impurities, ionization to remove ionized impurities, and filtration to remove particulates. NO TAG illustrates a water purification system that combines adsorption, deionization, and filtration to product Type I water.

Maintaining Water Quality

You can ensure that the reagent water supply in your laboratory consistently meets NCCLS guidelines by:

- storing reagent water properly

251

2-5 254

- testing for resistivity and contamination
- maintaining your water purification system

Establishing procedures for maintaining reagent water quality is also required for laboratory inspection and accreditation by the College of American Pathologists (CAP).[10]

Storing Reagent Water

Type I reagent water cannot be stored. Use it immediately after you produce it because it degrades quickly and no longer meets Type I reagent water specifications. Additionally, you cannot purchase Type I reagent water because its purity is not reliable.

Store Type II and Type III reagent water in glass or polyethylene bottles. Use it as soon as possible after preparation to reduce the risk of contamination by microorganisms.

Testing Reagent Water

To monitor water quality and detect problems with your water purification system, test reagent water regularly for resistivity and bacterial contamination. You may also want to send reagent water out of the laboratory periodically for independent evaluation. Record your test results and any corrective action.

Refer to the NCCLS specifications for information about recommended water testing methods.[7]

Maintaining your Purification System

Efficient operation and regularly scheduled maintenance of your water purification system is the key to optimizing the performance of the system and consistently obtaining reagent quality water. Preventative maintenance reduces the chance of the purification system introducing additional contaminants into source water and ensures that reagent water retains its purity when it is introduced into the laboratory instrument.

The following are suggested guidelines for maintaining water purification systems to ensure smooth operation and prevent system problems.

For customized water systems:

- Change filters on carbon or membrane filter systems as required
- Use a recirculating pump to optimize performance and reduce contamination
- Filter the source water before treatment in reverse osmosis systems, and recirculate deionizers in closed loops to extend resin life

For distillation systems:

- Check the water vessels regularly for the presence of slippery film
- Clean and disinfect the vessels as required with an agent that rinses well, such as hydrogen peroxide
- Clean the boiler regularly to remove deposits
- Test routinely for contamination

For complete information about operation and maintenance requirements for your water purification system, refer to the manufacturer's specifications.

Problems Caused by Water

Using water that does not meet NCCLS guidelines can cause problems with clinical laboratory systems. Some common problems include:

- contamination of system components
- inaccurate patient and calibration results
- out–of–range quality control results
- deterioration of lyophilized quality control material
- color changes and poor stability and performance of reagents

These problems can be caused by failure to use the appropriate type of reagent water, bacterial contamination, and inadequate maintenance of the water purification system,

Refer to Section 8, *Troubleshooting*, for more detailed information about problems caused by water that does not meet reagent water specifications.

Appendix F: Specifications

This section summarizes the ACS:Centaur system specifications. The design of the ACS:Centaur system meets the requirements of the following agencies:

- UL
- CSA
- IEC
- JIS and MHW
- TUV
- FCC Class A
- VDE Class A
- CE

Dimensions

Depth	1.05 m (41.2 in)
Height	1.27 m (50 in)
Width	1.83 m (72 in)
Total Envelope	178 x 127 cm (70 x 50 in)
Weight	545 kg (1200 lbs)

The system is equipped with casters to enable it to be moved.

Microprocessor (CPU) Specifications

Main CPU	two Sparc® 2 CPU boards, 32-bit microprocessors with integrated numeric coprocessor
Mass Storage	4 gigabyte hard disk drive and 3.5-inch, double-sided, high-density, 1.44 MB, diskette drive
CD-ROM	650 MB storage capacity; Quad speed
Memory	for the User Interface CPU, 32 MB of dynamic, random access memory (RAM); 256 KB of static RAM; 32 KB of read-only memory (ROM)
Monitor	Resolution Size Color

254

Printer Specifications

The Okidata® OL410e/PS printer is accepted for use with the ACS:Centaur system.

Environmental Specifications

Ambient Operating Temperature	18.0 to 30.0°C
Relative Humidity	24% to 80%, non-condensing
Storage Temperature	0.0 to 50.0°C

Indoor Use Only

Altitude up to 2000 meters

IEC 1010-1 Installation Category I

IEC 1010-1 Equipment Classification Class II

IEC 1010-1 Pollution Degree 1[11]

Outputs

Parallel	one parallel port for the external printer
RS-232C	four serial ports for bidirectional communication: modem, LIS, barcode, and (Uninterruptable Power Supply) UPS
Printer	600 dpi; postscript compatible

Luminometer Specifications

Dark Count Rate	less than 300 counts per second (cps), (25.0°C, gain = 2×10^6)
Mode of Operation	photon counting
Peak Response	420 nm
Spectral Response	300 to 650 nm

255

Electrical Ratings and Power Requirements

Power Consumption	2000W maximum
Electrical Requirements	dedicated line required 208–240V ~ 12A, 50/60Hz

Primary Sample Tube Specifications

Tube Size (mm)	Fill Volume (mL)	Acceptable Manufacturer	Brand
10.25 x 50	2.0	Sherwood Medical	Monoject®
10.25 x 64	3.0	Sherwood Medical	Monoject
10.25 x 82	4.0	Sherwood Medical	Monoject
10.25 x 75		Becton Dickinson	Vacutainer®
10.25 x 100		Becton Dickinson	Vacutainer
11.5 x 66	2.7	Sarstedt	Safety Monovette®
11.5 x 75	4.0	Sarstedt	Safety Monovette
11.5 x 92	4.5	Sarstedt	Safety Monovette Luer Monovette
12.4 x 75		Terumo	
13 x 75	2.5	Becton Dickinson	Vacutainer Plus
13 x 75	4.0	Greiner	
13 x 75	5.0	Sherwood Medical	Monoject Corvac®
13 x 75	7.0	Sherwood Medical	Monoject
13 x 100	6.0	Becton Dickinson	Vacutainer Plus
13 x 100	7.0	Sherwood Medical	Monoject Corvac
13.5 x 75		Terumo	
14.5 x 84		Terumo	
15 x 100		Terumo	
15.3 x 57	4.0	Sarstedt	Safety Monovette Luer Monovette
15.3 x 75	6.0	Sarstedt	Safety Monovette
15.3 x 100	8.5	Sarstedt	Safety Monovette
16 x 75		Becton Dickinson	Vacutainer
16 x 75	7.0	Sherwood Medical	Monoject

256

Tube Size (mm)	Fill Volume (mL)	Acceptable Manufacturer	Brand
16 x 100		Becton Dickinson	Vacutainer
16 x 100	10.0	Sherwood Medical	Corvac
16 x 100	10.0	Sherwood Medical Greiner	Monoject
16.5 x 92	9.0	Sarstedt	Luer Monovette

Sample Transfer Cups and Tubes Specifications

Tube Size (mm)	Bottom Type	Acceptable Manufacturer
12 x 75	round	Various
13 x 75	round	Becton Dickinson
13 x 100	conical	Chiron Diagnostics Olympus
13 x 100	round	Various
13 x 102	round	Becton Dickinson
16 x 38	conical	Hitachi
16 x 75	round	Becton Dickinson
16 x 80	conical	Smith Kline
16 x 100	round	Various
16 x 102	round	Becton Dickinson

Microsample Containers Specifications

Container Size (mL)	Acceptable Manufacturer	Product
0.5	Kodak	Microsample Cup
1.0	Gilford	Sample Cup
1.3	Sarstedt	Microsample Tube
1.5	Becton Dickinson Terumo	Microtainer Capiject
2.0	Kodak	Microsample Cup

257

Appendix G: System Symbols

This section describes the symbols that appear on the exterior of the ACS:Centaur system. The symbols provide you with the location of certain components and with warnings for proper operation.

Symbol	Description
⚠	This symbol appears on the system and in the manual. On the system, this symbol indicates that you should consult the manuals provided with the ACS:Centaur system.
~	This symbol indicates that the input electricity is alternating current.
	This symbol alerts you to important information about the fuses.
	This symbol identifies the location of a protective earth (GND) conductor terminal.
	This symbol cautions you against the risk of exposure to biohazards.
|	This symbol indicates the main power supply is on.
○	This symbol indicates the main power supply is off.
	This symbol indicates the location of the parallel port for the printer.
1, 2, 3	These numbers indicate the locations of the RS-232 serial ports.
	This symbol indicates the location of the barcode scanner connector.
	This symbol indicates the location of the keyboard connector.
	This symbol indicates the location of the diskette drive.
	This symbol indicates the location of the compact disc drive.

258

Symbol	Description
	This symbol indicates the location of the primary reagent compartment.
	This symbol indicates where ancillary reagent packs are loaded onto the system.
	This symbol indicates where ancillary reagent packs are removed from the system.
	This symbol indicates where Stat samples are loaded onto the system.
UUU	This symbol indicates where cuvettes are loaded onto the system.
	This symbol indicates where sample tips are loaded onto the system.
1	This symbol indicates where waste cuvettes and tips trays are collected.
2	This symbol indicates where waste sample tips are collected.
+	This symbol identifies the system fluid bottle for acid reagent.
−	This symbol identifies the system fluid bottle for base reagent.
1	This symbol identifies the system fluid bottle for wash 1 solution.
2	This symbol identifies the system fluid bottle for wash 2 solution.
Cl	This symbol identifies the system fluid bottle for cleaning solution.

289

Symbol	Description
	This symbol identifies the water bottle.
	This symbol identifies the waste bottle.

260

Appendix H: References

1. Whitehead TP, Kricka J, Carter JN, Thorpe G. Analytical luminescence: its potential in the clinical laboratory. Clin Chem 1979; 25/9:1531–1546.
2. Woodhead JS, Campbell AK, McCapra F, Beheshti I, Weeks I. Acridinium esters as high specific-activity labels in immunoassays. Clin Chem 1983; 29/8: 1474–79.
3. Weeks I, Woodhead JS. Chemiluminescence immunoassays. J. Clin Immunoassay 1984; 7/1:82–89.
4. Patel A, Morton MS, Woodhead JS, Ryall MET, McCapra F, Campbell AK. A new chemiluminescent label for use in immunoassay. Biochem Soc Trans 1982; 10: 224–5.
5. Tietz NW. Fundamentals of clinical chemistry, 3rd ed. Philadelphia: W.B. Saunders Company; 1987. 1010 p. [now updated]
6. Kricka LJ. Chemiluminescence immunoassay. In The Immunoassay Handbook, 1st ed. New York: Stockton Press; 1994. pp. 341–343.
7. Dudley chap 10 in The Immunoassay Handbook. 1994. pp. 161–164.
8. Dudley R. Chemiluminescence Immunoassay: An Alternative to RIA. Lab Med 1990; 21/4; 216–221.
9. Chiron Diagnostics 1997. The ACS:180 System.
10. Kaplan LA, Pesce AJ. Clinical Chemistry: theory, analysis, and correlation, 2nd ed. St. Louis: CV Mosby Company; 1989. 1212 p.
11. National Committee for Clinical Laboratory Standards. Preparation and testing of reagent water in the clinical laboratory. 2nd ed. Villanova (PA): NCCLS; 1991 Aug. 37 p. (NCCLS Document C3–A2).
12. College of American Pathologists, Laboratory General Inspection Checklist, Section 1, Quality of water, p. 8. Northfield, IL. 1989.
13. Safety requirements for electrical equipment for measurement, control, and laboratory use. International Standard (IEC) 1010–1.
14. Smart JB. The Ciba Corning ACS:180—A user's perspective. J Clin Immunoassay 1992:15:246–251.
15. Boland J, Carey G, Krodel E, et al. The Ciba Corning ACS:180 benchtop immunoassay analyzer. Clin Chem 1990; 36:1598–1601.
16. Protection of laboratory workers from infectious disease transmitted by blood and tissue. Villanova, PA: NCCLS Publication M29 1991.

261

~~237~~ 261

Glossary

acceptable CV — Highest acceptable percent coefficient of variation among the replicates of the calibrators, controls, or patient samples. The system flags results higher than this value.

acid probe — Mechanical component that injects acid reagent into a cuvette to resuspend the magnetic particles and prepare the ester for light emission.

acid reagent — Solution of 0.5% hydrogen peroxide and 0.1N nitric acid. Acid reagent is added to the magnetic particles in the cuvette after the wash cycle and reacts with the acridinium ester at a low pH. This prepares the ester for light emission.

acridinium ester (AE) — Chemical tag responsible for the flash when acid reagent is added to the acidified magnetic particle/analyte/AE mixture in the cuvette.

activate — Function used to enable an object for full use on the system.

active — Available for full use on the system. An enabled test or a reagent pack can be active.

ancillary reagent — Additional reagents required for an assay, such as Releasing Agent, DTT, or sample diluent. Ancillary reagents can reside in either the sample or reagent areas of system.

ancillary reagent probe — Component that aspirates ancillary reagents from the sample area and dispenses them into cuvettes.

antibody

- Protein (immunoglobulin molecule) produced by the body in response to the presence of an antigen. Antibodies are used as part of the body's resistance to disease.
- Protein that can combine with a specific antigen.

Also called Ab.

antigen — Substance that combines specifically with a corresponding antibody. *Also called* Ag.

archiving — Process that removes data from system memory and stores it on external media. The types of data that you can archive include QC data, patient results, Master Curve data, and calibration data.

aspirate probes — Mechanical devices that draw fluid from the cuvettes after magnetic separation occurs.

262

background Electronic signal of the photomultiplier tube (PMT) in the absence of light.

barcode Encoded information that is read by an optical scanner.

barcode scanner Optical device that scans and decodes barcoded information from the label on a reagent pack or vial, sample cup, or primary sample tube.

base probe Mechanical component that injects base reagent into a cuvette causing the chemiluminescent reaction.

base reagent Solution of <0.25N sodium hydroxide. Base reagent is added to the cuvette in the luminometer. The pH shift and accompanying electron excitation cause the chemiluminescent reaction.

batch Method of order entry which provides the convenience of specifying one or more tests on multiple samples.

baud rate Speed of data transmission in bit per seconds (bps) between the system and a remote device.

bidirectional interface Interface configuration allowing information to be transferred to and from another device.

calibration interval Number of days or hours that the calibration is valid for an assay.

calibrator Solution that contains a known concentration or a known reactivity of one or more analytes and that provides a reference for converting measured signals into concentrations. Calibrators are analyzed with reagents to obtain calibration data points. *See* calibration data.

calibrator card Card that contains the calibrator information for a specific lot of calibrators. The card contains the lot number, the expiration date, and the high and low calibrator values for each analyte contained in the calibrator. This information appears on the card in text and barcodes for you to enter into the system.

cancel Function used to ignore changes made at a screen or window.

carryover Contamination of a sample or reagent by the residue from the preceding sample or reagent.

263

central processing unit — Main printed circuit board of a computing system that interprets instructions and directs the system operations. *Also called* CPU.

character parity — Transmission setting used to check for transmission errors between the system and a remote device. This setting must be the same at the system and the remote device to maintain compatibility between the systems.

chart — QC statistics report that shows a Levey-Jennings chart of the data points and statistics collected during the most recent 45 days for a selected control and test.

check digit — Character printed at the end of a barcode that allows the barcode reader to verify the accuracy of its scanning and to verify accurate data transmission (Communications).

chemi-luminescence — Oxidation reaction of an organic chemical compound. The chemiluminescent reaction emits light.

competitive assay

- Antibody-antigen reaction in which the antigen of unknown concentration in a sample and a labeled antigen in an assay reagent compete for a limited amount of antibody in an assay reagent. The measurable signal produced by the Ab/labeled-Ag reaction is inversely proportional to the unknown concentration of Ag in the sample.
- Antibody-antigen reaction in which the antibody of unknown concentration in a sample and a labeled antibody in an assay reagent compete for a limited amount of antigen in an assay reagent. The measurable signal produced by the Ag/labeled-Ab reaction is inversely proportional to the unknown concentration of Ab in the sample.

control — *See* QC material.

CPU — *See* central processing unit.

cursor — Indicator that appears on the system screen to show you where to make an entry or a selection.

cutoff point — Medical decision point for a qualitative assay. Results above the cutoff point are reported with a different qualitative interpretation than those below the cutoff point.

2641

cuvette	Plastic, disposable container that holds the reaction mixture on the system. The chemiluminescent reaction occurs inside the cuvette.
CV	Percent coefficient of variation among the replicates for a sample.
cycle count	Each time a cuvette exits the luminometer, the cycle count increments by one.
dark count	Electronic background signal of the photomultiplier tube (PMT) in the absence of light.
data bits	Number of characters transmitted at one time between a system and a remote device.
Data link Protocol	Communication protocol used to transmit data between the system and a remote device.
default value	Value defined and preset by Chiron Diagnostics.
define	Establish a value for a variable or symbol, or to establish what the variable represents.
defined limits	Range of the data points defined by Chiron Diagnostics for a selected control and test.
delete	Function used to remove an object from the database.
demographics	Information about a patient or sample such as name, identification number, date of birth, sex, location, and physician or lot number and expiration date.
diluent	Solution used to dilute a sample.
dilution setpoint	Value that indicates the maximum concentration beyond which the system dilutes the sample and repeats the test.
disable	• Command or condition that does not allow a specific event to proceed. • Function used to remove a test from the menu.
diskette drive	Device that writes information to, and reads information from, a 3.5-inch diskette.
DOB	Patient's date of birth.

enable
- Command or condition that permits a specific event to proceed.
- Function used to add a test to the menu.

equivocal
Interpretation of a qualitative assay for which a definitive result is not possible. Certain qualitative assays have equivocal zones which are established as a range on either side of the cutoff point. *Also called* indeterminate.

event log
List of system occurrences including errors, from the most recent to the oldest. This information includes the date and time of each occurrence.

exclude
Function used to remove a value from inclusion with other values.

flash
Short burst of light produced during the chemiluminescent reaction when acridinium ester is oxidized (when the pH rapidly changes from acidic to basic with the addition of base reagent).

forward sandwich (FS) protocol
Test protocol requiring two incubation cycles and two to four wash/aspiration cycles.

graphical user interface
Tool for communicating information to the user via graphics on the system screen. Graphics can include icons, scroll bars, and other graphical elements. *Also called* GUI.

hard disk drive
Device that stores data and contains all system programming. The system uses an X-megabyte hard disk drive.

histogram
Representation of the frequency distribution of patient results in the form of a bar chart.

ICMA
See immunochemiluminometric assay.

immunoassay
Chemical test that uses an antibody-antigen reaction to determine the presence of a specific analyte or to quantify a specific analyte. The analyte being measured may be an antibody or
an antigen.

immunochemilu-m inometric assay
Type of sandwich assay in which the measurable signal produced by the reagent-labeled Ab/Ag reaction is proportional to the unknown concentration of antigen or antibody in a sample. *Also called* ICMA. *See also* sandwich assay.

266

in process Status of a test when the sample is in the inprocess queue and has been detected by the system or the sample is in progress, but no sample has been dispensed yet.

in progress Status of a test when the sample is dispensed into a cuvette and is in the incubation chamber.

inactivate Function used to limit an object for use on the system.

inactive Not available for full use on the system. Only calibrators and controls can be scheduled for inactive tests and reagent packs.

include Function used to add a value for consideration with other values.

incubation ring Component that contains the ring and heatblocks.

indeterminate Interpretation of a qualitative assay for which a definitive result is not possible. Certain qualitative assays have indeterminate zones which are established as a range on either side of the cutoff point. *Also called* equivocal.

intercept Factor used with slope to correlate the assay results with another method. You obtain the intercept and the slope from a regression equation based on method comparison studies.

keyboard System component you use to type information or to respond to a system prompt.

label Substance coupled to an antigen or antibody, which provides the measurement signal for an immunoassay.

Laboratory Information System Laboratory computer system that can be interfaced to the system. *Also called* LIS.

Levey-Jennings charts Charts used to graphically display QC data points for evaluation against a required mean and standard deviation. *See also* chart.

light count Measured electronic signal of the photomultiplier tube (PMT) in the presence of light.

LIS *See* Laboratory Information System.

LIS Code Alphanumeric code that identifies a test, profile, or calibrator to your hospital or laboratory computer.

267

235

Lite Reagent	Assay reagent containing antibody or antigen labeled with acridinium ester in buffer.
lot-to-date QC data	QC mean, SD, number of points, and CV collected over the time the lot was in use on the system.
luminometer	Component of the system where the chemiluminescent reaction occurs and is measured.
Master Curve	Multiple-point curve that Chiron Diagnostics generates for each lot of Solid Phase and Lite Reagent for a particular test. The Master Curve is the reference curve used to convert a measured signal into sample concentration. Calibration data normalizes the system against stored Master Curve data for the tested analyte.
Master Curve card	Card that contains all the Master Curve information for a specific lot of assay reagents. The card contains the reagent lot numbers and expiration dates, number of curve points, and the RLUs and concentration for each curve point. This information appears on the card in text and barcodes for you to enter into the system.
minimum detectable volume	Smallest reagent or sample volume detectable by the system. *Also called* base volume.
n	Total number of observations. Used in calculating the mean.
nonspecific binding	All acridinium ester present during the measurement phase that does not represent specific antibody binding. A small percentage of acridinium ester attaches indiscriminately to the cuvette wall or to particles and does not wash away. The result is a signal that mimics the antibody-antigen reaction.
normal range	*See* reference range.
numeric keys	Keys found on the right side of the keyboard labeled with numbers and mathematical symbols.
observed limits	Range of the data points collected during the most recent 45 days for the selected control and test.
off-system test	Test that is not run on the system but whose results are entered in the result database and printed on a patient report. Off-system test results can also be used in ratio test definitions.

268

one-step protocol Test protocol that includes a 20 minute incubation and 1, 2, or 3 wash aspirate cycles.

Used to detect antibody.

optimize placement Function that indicates where to place reagent packs so that reagent probes can operate efficiently.

orderable test definition (user) Set of parameters that users define for each test such as test name, reference range, check range, and number of replicates.

pack ID Identification code contained in the barcode on a reagent pack that the system recognizes as unique to that pack.

paramagnetic particles Magnetic particles used in the Solid Phase. *Also called* PMP.

PBS *See* phosphate buffered saline.

pending samples Samples for which tests are scheduled but not yet complete.

pending tests Tests still to be performed by the system.

phosphate buffered saline Saline solution that is pH buffered. Phosphate buffered saline is used for washing and resuspending solid phase particles.

photomultiplier tube Sensitive photodetector that captures individual photons of light. The photodetector consists of a vacuum-filled photo tube with a cathode (usually nine diodes) and an anode that the system uses to generate a signal (pulse) during the measurement phase. The signal is directly proportional to the amount of illumination produced by the reaction and can be converted into sample concentration. *Also called* PMT.

photon Unit of light; quantum of radiant energy.

PID Patient identification code. A unique code that identifies the patient from which the sample was obtained.

PMP *See* paramagnetic particles.

PMT *See* photomultiplier tube.

pointing device Apparatus used to interact with system software through the user interface, such as a mouse or a trackball.

369

power supply Electronic subsystem that converts the AC voltages in the power line to the DC voltages used inside the system.

power-on time Cumulative time the system power has been on since its first use.

predilution Dilution option that allows the operator to load a diluted sample and specify the dilution factor.
The system corrects the assay value for the dilution factor.

primary sample tube Tube used to collect patient blood samples by venipuncture.

profile Group of related tests or a group of the same test with different dilution specifications.

prompt Questions, instructions, or commands that help you complete the current task.

query timeout Maximum number of minutes required for a remote device to respond to a query from the system.

rack Device used to present sample tubes to the system. The rack contains space for up to five sample tubes.

Rack ID Positional identification code. The unique code that identifies each sample rack and the positional location of the sample in the rack. *Called* Rack *on the user interface*

random access Mode of operation in which the system processes samples for multiple assays in the most efficient order.

ratio definition Formula the system uses to calculate the results of a ratio test.

ratio test Test results calculated from the results of other tests. FTI is an example of a ratio test.

raw data Total photon count that the system receives for a flash. The raw data is not corrected.

reagent pack Triple-chamber container for the Solid Phase, Lite Reagent, and if required, ancillary reagent. Reagent packs are loaded onto a rocker in the reagent area of the system so that the solid phase remains in suspension.

270

reagent probe 1, 2, or 3 Three independent components that aspirate assay reagents and ancillary reagents from the reagent area and dispense them into cuvettes.

reference range Range of values for each assay from a defined population. Each laboratory should establish its own reference ranges for the diagnostic evaluation of patient results. The normal range is a reference range for the healthy population and can be defined by sex, age, or other patient attributes. Reference ranges can also exist for various pathological states. For example, there may be reference ranges for hypothyroid, euthyroid, and hyperthyroid states.

Chiron Diagnostics provides expected results in the product insert for each assay.

relative light unit Counts generated when the PMT detects light during the chemiluminescent reaction. A relative light unit is calibrated against a tritium source and is unique to its measurement. *Also called* RLU.

releasing agent Solution that is mixed with a sample to separate the agent analyte from the binding proteins, making the analyte available for the reaction.
Also called REL.

remark Warning or caution message about the status of a result. The remark appears next to the result on the screen and on printed reports.

remote device ID Alphanumeric code that identifies the remote device connected to a system port.

replicate Number of times that a sample is assayed for a particular test. The system calculates the mean value from the results of the replicates of the calibrator, control, or patient sample.

RLU *See* relative light units.

Running System state indicating that there are samples in the inprocess queue, tests in the track, or that the cleaning procedure is in process.

sample cup Disposable container that holds samples, controls, or calibrators.

sample probe Component that aspirates a sample and dispenses it into a cuvette in the track.

sandwich assay

- Antibody-antigen reaction in which the antigen of unknown concentration in a sample is sandwiched between antibody bound to solid phase and antibody labeled with acridinium ester. The measurable signal produced by the reaction is directly proportional to the concentration of Ag in the sample.
- Antibody-antigen reaction in which the antibody of unknown concentration in a sample is sandwiched between antigen bound to solid phase and antigen labeled with acridinium ester. The measurable signal produced by the reaction is directly proportional to the concentration of Ab in the sample.

save

Function used to add an object to the database or to include updates to an object in the database.

SD

Standard deviation. The positive square root of the variance. A measure of scatter used to determine quality control ranges.

search

Function used to locate an item in a list.

SI units

International system for units of measure.

SID

Sample identification code. A unique code that identifies each sample.

sign in

Enter a password or code to access the system or an area of the system.

sign out

Indicate that you are finished working in the system or an area of the system.

slope

Factor used along with intercept to correlate the assay results with results from another method. You obtain the slope and the intercept from a regression equation based on method comparison studies.

solid phase

An assay reagent consisting of paramagnetic particles covalently bound to antigen or antibody suspended in a buffer.

sort

Function used to change the order of items in a list. For example, the worklist can be sorted by patient name or by SID.

spline curve

Method of data reduction that uses third-degree polynomials to connect each two data points in turn. The polynomials are adjusted to give a smooth curve.

272

startup The events that occur when the system uses the software to initialize the hardware.

status Information about the current operating condition of the system.

stop bits Number of data bits that maintain synchronization between the system and a remote device during data transmission.

subsystem failure Message classification category meaning:

a. subsystem broken; may be user recoverable and concurrent with system warning state *a*.

b. subsystem off-line until user interaction and concurrent with system warning state *b*.

Message color: red.

subsystem warning Message classification category meaning: subsystem will go off-line if user does not interact. Migrates to subsystem failure state *b*. Message color: yellow.

system failure Message classification category meaning: broken subsystem; system is not capable of processing anything more; may be user recoverable. Message color: red

system warning Message classification category meaning:

a. broken subsystem; still processing some tests, but migrates to system failure when finished.

b. subsystem off-line; system may or may not be still processing some tests.

Message color: yellow.

system clock Twenty-four-hour clock that the system uses to monitor various system functions, such as calibration intervals, and to track the time of events.

update Function used to overwrite information with new information. For example, when a new master test definition is issued, you update the master test definition for access to the latest version.

view Function used to limit the items that appear in a list. For example, you can view all the samples in the worklist or just samples with requests.

waive Function that allows you to use an expired calibration.

273

waste bottle	Container on the system that is the main receptacle for waste.
water bottle	Container on the system that holds the main supply of reagent water.
Westgard rules	QC evaluation rules used to detect systematic or random errors.
window	Screen display area that you can independently move or manipulate. These areas can overlap each other on the screen.
worklist	Information about requested tests and patient demographics.

ACS Centaur

Summary of Safety and Effectiveness

As required by 21 CFR 807.92, the following 510(k) Summary is provided:

1. **Submitters Information**

Contact person: William J. Pignato
Director of Regulatory Affairs

Address: Chiron Diagnostics Corporation
63 North Street
Medfield, MA 02052

Phone: 508 359-3825

Date Summary Prepared: April 14, 1997

2. **Device Information**

Proprietary Name: ACS:Centaur Analyzer
Common Name: Automated Immunoassay Analyzer
Classification Name: Photometric Analyzer for Clinical Use
Classification Number: 21 CFR 862.2160, Class I

3. **Predicate Device Information**

Name: ACS:180® Analyzer
Manufacturer: Chiron Diagnostics Corporation (formally Ciba Corning Diagnostics Corp.)
510(k) Number: D.C. #K902336.

4. **Device Description**

The ACS:Centaur system is a stand-alone, continuous operation, immunochemistry analyzer. The system performs the following functions.

- aspirates and dispenses samples
- performs dilutions
- adds reagents
- incubates reaction vessels
- separates solid and liquid waste
- measures photon emissions
- performs data reduction
- collects and maintains patient demographics and results

275

5. Statement of Intended Use

The intended use of the ACS:Centaur system is an automated immunoassay analyzer designed to perform in vitro diagnostic immunochemical assays analysis on clinical specimens using the ACS ilmmunoassays. The system menu will include endocrine, anemia, reproductive, cardiac, therapeutic drug, and infectious disease assays. All assays are based on chemiluminescent technology.

6. Summary of Technological Characteristics

ACS assays are dedicated for use on the ACS:180® and the ACS:Centaur utilizes acridinium ester as label and paramagnetic particles as the solid phase. Like the ACS:180®, the ACS:Centaur measures the amount of light emitted during the chemiluminescent reaction. There is direct relationship between the amount of light emitted and amount of antigen in the patient sample. The system will measure both competitive binding assays and sandwich assays.

The ACS:Centaur system uses a Master Curve and a two-point, user-initiated calibration to calibrate all the ACS assays. The Master Curve and the two-point calibration system eliminate the need to measure a full standard curve with each assay or to run calibrators each time the assay is run. The system stores the calibration for the interval specified in the assay product inserts.

Other Technological Features include:

- Photomultiplier used in the photon counting mode
- Automated pipetting of sample and reagents
- Electronic Fluid Sensing on sample and reagents
- Clog detection for samples
- Random access and batch test processing
- Varied test incubations
- Human Interface features including barcode reading, LIS, automated data reduction.
- Automated dilution capabilities

276

Comparison of
ACS:Centaur features to ACS:180 Plus features

Feature	ACS:180 Plus	ACS Next Generation
Principles of Operation	• Chemiluminescence using magnetic-particle solid phase and chemiluminescent label	• same
Optical System	• PMT used in photon counting mode	• same
Temp control	• Reactions are controlled at 37°C	• *Reactions* • Reactions controlled at 37°C • *Reagent Storage* • Reagents stored at 4 to 8°C

Dispense System	• Automated pipetting of samples and reagents
	• Precision syringes (sample and reagent)
	• Electrical fluid sensing on sample and reagent probes
	• Clog detection mechanism to alert operator to clogged sample probe
		• *Sample Probe - same*, except:
		  • Air pressure fluid sensing
		  • Air pressure disposable tip sensing
		  • Clog detection
		• *Reagent Probes - same*, except
		  • No level sense; probe sent to bottom of container
		  • Fluid monitoring during aspiration

Reagent and Sample Handling	• Sample carousel with 34 outer positions and 26 inner positions • Reagent carousel with 26 positions (13 pairs in usual configuration) • Sample tray inserts for other size sample tubes	• *Samples*: 5 tube racks hold sample tubes • Sample Input, In-Process and Output Queue holds up to 180 samples; Tube size selected on sample tube rack • *Assay Reagents:* Reagent Tray with 30 positions; Refrigeration; Reagent Pack contains both Solid Phase and Tracer Reagent in separate wells • *Ancillary Reagents:* Reagent Compartment with 15 positions; Refrigeration
Test Processing	• Random Access and Batch	• *same*, except: • sample scheduling optimized for throughput; Continuous Operation
Assay Protocols	• 8 minute incubation, single step	• 8 minute incubation, single step • 18 minute incubation, single step • 8 - 18 minute incubation, two step • 18 - 18 minute incubation, two step

Human Interface data output	• 9" CRT
	• External printers
	• Serial bi-directional LIS Interface
	• Audible (adjustable) beeper
	• Computer LIS Interface
		• *same*, except:
		  • 17" Color Monitor with Graphical User Interface
		  • External Modem for Remote Diagnostics Interface

Human Interface data input	• 101 key keyboard • Hand-held barcode reader • Stationary barcode scanners for id of patient samples and reagents • Computer LIS Interface	• *same*
Human Interface data analysis	• Automated data reduction • Assay-specific data reduction	• *same*
QC Software	• Stored control results • L-J plotting • Statistical enhancements • Compatibility with CCD QC Reporting	• *same*
Specimens	• Serum or plasma, sample cups or primary tubes may be used • Dilutions allowed on a per-assay basis • Capability of Dilution of Samples Requiring Pretreatment	• *same*

277

245

Disposables	• Sample cups
	• Reaction cuvettes
	• Cuvette loading and unloading allowed during run
	• Reagent 1 & 2 status tracked and displayed
		• *same*, except:
		  • Additional wash solutions (status tracked and displayed)
		  • Sample Pipette Tips
		  • All disposables may be loaded during operation
		  • All waste may be unloaded during operation

Reagents	• Solid Phase • Chemiluminescent label (Acridinium Ester) • Reagent volume reporting • Reagent inventory tracks bottle usage	• *same*, except: • Ancillary Reagents with inventory tracking and volume reporting
Calibrators	• 6 to 10 point stored calibration for each reagent • 2 point user run calibration • Calibrators checked with barcode • Calibrator lot numbers stored and displayed	• *same*
Controls	• Low, mid, and high constituent controls • Capability to dilute controls	• *same*
Physical	• Bench Model; 23Hx23Dx58L • 250lbs • <1200watts • Ambient temp 18-30C	• Floor Model; 60Hx42Dx58L • 1200 lbs. • <2000 watts • ambient temp 18-30C
Laboratory Automation	• Software controlled signals for interface to a robot for transfer of samples to and from a sample transport system	• *same*, except: • Software signals for direct sampling from the sample transport system
Other User Interface Features	• Stat interrupt capability • Improved cleaning with Extended Operation Module • Improved User Interface for scheduling batch runs, report options, easy-to-use maintenance • Complete reporting of system status and logging of system events • Tracking on-board reagent usage • Support for foreign languages • Barcode extended to 128, 2 of 5 • On-Line Information System • System test extended to include slope and offset, dilution and overrange condition •	• *same*

Other Performance Features	• Throughput: 180 tests/hr
	• Time to First Result: 15 min.
	• On-board supplies
	• Cuvettes for 200 assays
	• Water for 200 assays
	• Solid and liquid waste container
		• *same*, except:
		  • Throughput: 120 to 240 tests/hr
		  • Time to First Result: 15 min., 30 min., 60 min. depending upon assay protocol
		  • On-board supplies for 1000 tests

ACS: Centaur

Labeling for System Fluids

7.75 x 2 inches

Acid Reagent
For In Vitro Diagnostic Use
For use with the ACS:Centaur System.
1500 ml/5000 Tests
0.5% H_2O_2
0.1 N HNO_3
Manufactured by:
Chiron Diagnostics Corporation
East Walpole, MA 02032 USA
Chiron Diagnostics Ltd
Halstead, Essex, CO9 2JS U.K.

Säure Reagenz
In Vitro Diagnosticum
Zur Anwendung mit dem ACS:Centaur System.
1500 ml/5000 Tests
0,5% H_2O_2
0,1 N HNO_3
Chiron Diagnostics GmbH
D-35453 Fernwald, Germany

Réactif Acide
Pour utilisation diagnostique in vitro
Pour utilisation sur le système ACS:Centaur.
1500 ml/5000 Tests
H_2O_2 0,5% et HNO_3 0,1 N
Chiron Diagnostics S.A.
Cergy Pontoise, France

Acid Reagente
Para uso diagnostico in Vitro
Da utilizzare con il sistema ACS:Centaur.
1500 ml/5000 Tests
0,5% H_2O_2
0,1 N HNO_3
Chiron Diagnostics S.p.A.
Cassina de' Pecchi (MI) Italy

Acid Reactivo
Para Uso Diagnóstico In Vitro
Para usarse con el sistema ACS:Centaur.
1500 ml/
5000 Pruebas
0,5% H_2O_2
0,1 N HNO_3

酸化剤
体外診断用医療品
1500mL / 5000テスト用
成分：0.5%過酸化水素、0.1mol/L硝酸
貯法：4～25℃
販売元：Chiron Diagnostics Corporation
輸入元：カイロン株式会社
：Chiron KK
東京都渋谷区恵比寿 1-19-15
Tokyo 150, Japan

CHIRON | DIAGNOSTICS

108286 Rev. A

ACS:Centaur

Acid Reagent

4–25°C

Cat/Art-Nr/Réf./カタログ
672177

Lot/Ch. B

Exp/Ablw Kc

Date Installed/Lösung eingesetzt am/Mise en place le/Data d'installazione/Fecha de instalación/XXXX

Artwork No., 108287, Rev. A

Base Reagent
For In Vitro Diagnostic Use
For use with the ACS:Centaur System.
1500 ml/5000 Tests
<0,25 N NaOH and surfactant

Manufactured by:
Chiron Diagnostics Corporation
East Walpole, MA 02032 USA
Chiron Diagnostics Ltd.
Halstead, Essex, CO9 2XX U.K.

Base Reagenz
In Vitro Diagnosticum
Zur Anwendung mit dem ACS:Centaur System.
1500 ml/5000 Tests
<0,25 N NaOH mit Detergenz

Chiron Diagnostics GmbH
D-35433 Hermsdorf, Germany

Réactif Base
Pour utilisation diagnostique in vitro
Pour utilisation sur le système ACS:Centaur.
1500 ml/5000 Tests
NaOH <0,25 N et surfactant

Chiron Diagnostics S.A.
Cergy Pontoise, France

Base Reagente
Per uso diagnostico In Vitro
Da utilizzare con il sistema ACS:Centaur.
1500 ml/5000 Tests
NaOH <0,25 N
a tensioattivo

Chiron Diagnostics S.r.l.
Comune de' Pezzoli (MI), Italy

Base Reactivo
Para Uso Diagnóstico In Vitro
Para usarse con el sistema ACS:Centaur.
1500 ml/
5000 Pruebas
<0,25 N NaOH
y surfactante

酸化剤助剤
体外診断用試薬
1500mL/5000テスト用
成分：0.25mol/L水酸化ナトリウム
保管：4～25℃

製造元：Chiron Diagnostics Corporation
輸入元：カイロン株式会社
：Chiron K.K.
東京都渋谷区恵比寿 1-19-15
Tokyo 150, Japan

CHIRON | DIAGNOSTICS

108283 Rev. A

ACS:Centaur

Base Reagent

4–25°C

Cat./Art. Nr./Réf./ カタログ
672177

Lot/Ch.-B.:

Date Installed/Lesing eingesetzt am/
Mise en place le/Data d'installazione/
Fecha de instalación/XXXX

Exp./Verw. bis

3/4" x 2

Sodium hydroxide
Irritating to eyes and skin. Wear suitable gloves and eyeface protection. In case of contact with eyes, rinse immediately with plenty of water and seek medical advice. In case of accident or if you feel unwell, seek medical advice immediately (show the label where possible).

Natriumhydroxid
Reizt die Augen und die Haut. Bei der Arbeit geeignete Schutzhandschuhe und Schutzbrille/Gesichtsschutz tragen. Bei Berührung mit den Augen sofort mit Wasser abspülen und einen Arzt konsultieren. Bei Unfall oder Unwohlsein sofort einen Arzt zuziehen (wenn möglich, dieses Etikett vorzeigen).

Hydroxyde de sodium
Irritant pour les yeux et la peau. Porter des gants appropriés et un appareil des yeux/du visage. En cas de contact avec les yeux, laver immédiatement et abondamment avec de l'eau et consulter un spécialiste. En cas d'accident ou de malaise, consulter immédiatement un médecin (lui montrer l'étiquette si possible).

Idrossido di sodio
Irritante per gli occhi e la pelle. Usare guanti adatti e proteggersi gli occhi/la faccia. In caso di contatto con gli occhi, lavare immediatamente e abbondantemente con acqua e consultare un medico. In caso di incidente o di malessere consultare immediatamente il medico (se possibile, mostrargli l'etichetta).

Hidróxido de sodio
Irrita los ojos y la piel. Úsense guantes adecuados y protección para los ojos/la cara. En caso de contacto con los ojos, lávese inmediata y abundantemente con agua y acúdase a un médico. En caso de accidente o malestar, acúdase inmediatamente al médico (si es posible, muéstrese la etiqueta).

水酸化ナトリウム
眼や皮膚への刺激性があります。適当な手袋、また眼、顔面の保護具を着用して下さい。眼に入った場合は大量の水で充分に洗い流すなどの応急処置を行い、医師の手当等を受けて下さい。事故あるいは体の不調を感じた場合は、医師の手当等を受けて下さい。（その際にはラベルを示して下さい。）

108290 Rev. A

5.5 x 2 inches

Artwork No., 108291, Rev. A

28

Acid + Base Reagents

Irritant
Reagent
Irritante
[illegible]

Chemical ingredient: Sodium hydroxide
Irritating to eyes and skin. Wear suitable gloves and eye/face protection. In case of contact with eyes, rinse immediately with plenty of water and seek medical advice. In case of accident, or if you feel unwell, seek medical advice immediately (show the label where possible).

Chemische Inhaltsstoffe: Natriumhydroxid
Reizt die Augen und die Haut. Bei der Arbeit geeignete Schutzhandschuhe und Schutzbrille/Gesichtsschutz tragen. Bei Berührung mit den Augen sofort mit Wasser ausspülen und Arzt konsultieren. Bei Unfall oder Unwohlsein sofort Arzt rufen (wenn möglich, diesen Etikett vorzeigen).

Principe de chimie: Hydroxyde de sodium
Irritant pour les yeux et la peau. Porter des gants appropriés et un appareil de protection des yeux/du visage. En cas de contact avec les yeux, bien rincer à l'eau immédiatement et consulter un spécialiste. En cas d'accident ou de malaise, consulter immédiatement un médecin (si possible lui montrer l'étiquette).

Componente chimico: Idrossido di sodio
Irritante per gli occhi e la pelle. Usare guanti adeguati e protezione per gli occhi/la faccia. In caso di contatto con gli occhi, lavare immediatamente e abbondantemente con acqua e consultare un medico. In caso di incidente o di malessere consultare immediatamente il medico (se possibile, mostrargli l'etichetta).

Componente químico: Hidróxido de sodio
Irrita los ojos y la piel. Usar guantes adecuados y protección para los ojos/la cara. En caso de contacto con los ojos, lavar inmediata y abundantemente con agua y acudir a un médico. En caso de accidente o malestar, acudir inmediatamente al médico (si es posible, muéstrele la etiqueta).

XXXXXXXXXXXX XXXXX
XXXXXXXXXX XXXXXXXXXXXXXXXX XXXXX XXXX XXXXXXXX
XXXXXXXX XXXX XXXXXXX XXXXXXXXXXXX XXXXXXXX XXXXXXXX XX
XXXXXXXXXXXXXXXX XXXX XXXXXXXX XXXXXXXX

Manufactured by
Chiron Diagnostics Corporation
East Walpole, MA 02032 USA

Chiron Healthcare Pty Ltd
Scoresby 3179, Australia

Chiron Diagnostics S.A.
Cergy Pontoise, France

Chiron Diagnostics GmbH
D-35463 Lemgo/Lippe, Germany

Chiron Ltd
Hong Kong

Chiron Diagnostics S.p.A.
Gaggiano (Pavia) (MI) Italy

Chiron K.K.
カイロン株式会社
東京都渋谷区千駄ヶ谷 [illegible]
Tokyo 150, Japan

Chiron, S.A. de C.V.
Xochimilco, México D.F. C.P. 16018, México

Chiron Diagnostics Ltd
Halstead, Essex, CO9 2HX, U.K.

[illegible]

Reagents
For In Vitro Diagnostic Use
For use with the ACS:Centaur system
Store at 18–25°C
Acid: 1500 mL/5000 tests, 0.5% H_2O_2, 0.1 N HNO_3
Base: 1500 mL/5000 tests, <0.25 N NaOH and surfactant

Reagenz
In Vitro Diagnosticum
Zur Anwendung mit dem ACS:Centaur Systemen.
Lagern bei 18–25°C
Acid: 1500 mL/5000 Tests, 0,5% H_2O_2, 0,1 N HNO_3
Base: 1500 mL/5000 Tests, <0,25 N NaOH mit Detergenz

Réactif
Pour utilisation diagnostique in vitro
Pour utilisation avec le système ACS:Centaur.
Conserver à 18–25°C
Acid: 1500 mL/5000 tubes, H_2O_2 0,5%, HNO_3 0,1 N
Base: 1500 mL/5000 tubes, <0,25 NaOH et surfactant

Reagente
Solo per uso diagnostico In Vitro
Da utilizzare su ACS:Centaur system
Conservare a 18–25°C
Acid: 1500 mL/5000 test, 0.5% H_2O_2, 0.1 N HNO_3
Base: 1500 mL/5000 test, NaOH <0.25 N e tensioattivo

Reactivo
Para Uso de Diagnóstico en Vitro
Para usarse con el ACS:Centaur system
Almacenar a temperatura de 18–25°C
Acid: 5000 Determinaciones/1500 mL, 0.5% H_2O_2, 0.1 N HNO_3
Base: 5000 Determinaciones/1500 mL, <0.25 N NaOH y surfactante

XXXX XXXXX
XXXXXXXXXXXXXXX
XXXX
XXXXXXXXXX
XXXXXXXXXXXXX
XXXXXXXXXXX
XXXXXXXXXXXXXXX
XXXXXXXXXX
XXXXXXXXXXX

CHIRON | DIAGNOSTICS

9 x 4.25 inches

18–25°C

Acid + Base Reagents

Cat./Art Nr.:
112219

Avoid exposure to light. Store in the box.
Vor Licht suhützen. Ju der Verpackung aufbewahren.
Eviter l'exposition à la lumière. Conserver dans la boîte.
Evite exponer a la luz. Almacenar en la caja.
Non exporre alla luce. Conservare nella scatola.
XXXXXXXXXXXXXXXXXXXXXXXXXXX XXX

Kit/Trousse/
Juego/XXXXXX
Lot/Ch.-B:
3334455
Exp./Verw. bis:
30SEPT96

	Lot/Ch.-B
Acid/Xxxx/XXX	3334455
Base/Xxxx/XXX	4446677

5 x 4.25 inches

283

510(k) Number (if known): _____

Device Name: **Chiron Diagnostics ACS:Centaur System**

Indications for Use:

The intended use of the ACS:Centaur system is an automated immunoassay analyzer designed to perform in vitro diagnostic immunochemical assays analysis on clinical specimens using the ACS ilmmunoassays. The system menu will include endocrine, anemia, reproductive, cardiac, therapeutic drug, and infectious disease assays. All assays are based on chemiluminescent technology.proteins and is an indirect indicator of thyroid status.4

(Division Sign-Off)
Division of Clinical Laboratory Devices
510(k) Number K974118

(PLEASE DO NOT WRITE BELOW THIS LINE--CONTINUE ON ANOTHER PAGE, IF NEEDED)

Concurrence of CDRH, Office of Device Evaluation (ODE)

Prescription Use ✓
(Per 21 CFR 801.109)

OR

Over-The-Counter Use _____
(Optional Format 1-2-96)

284

K974 11418

JUL 17 1997

ACS Centaur

Summary of Safety and Effectiveness

As required by 21 CFR 807.92, the following 510(k) Summary is provided:

1. **Submitters Information**

Contact person: William J. Pignato
Director of Regulatory Affairs

Address: Chiron Diagnostics Corporation
63 North Street
Medfield, MA 02052

Phone: 508 359-3825

Date Summary Prepared: April 14, 1997

2. **Device Information**

Proprietary Name: ACS:Centaur Analyzer
Common Name: Automated Immunoassay Analyzer
Classification Name: Photometric Analyzer for Clinical Use
Classification Number: 21 CFR 862.2160, Class I

3. **Predicate Device Information**

Name: ACS:180® Analyzer
Manufacturer: Chiron Diagnostics Corporation (formally Ciba Corning Diagnostics Corp.)
510(k) Number: D.C. #K902336.

4. **Device Description**

The ACS:Centaur system is a stand-alone, continuous operation, immunochemistry analyzer. The system performs the following functions.

- aspirates and dispenses samples
- performs dilutions
- adds reagents
- incubates reaction vessels
- separates solid and liquid waste
- measures photon emissions
- performs data reduction
- collects and maintains patient demographics and results

285

5. Statement of Intended Use

The intended use of the ACS:Centaur system is an automated immunoassay analyzer designed to perform in vitro diagnostic immunochemical assays analysis on clinical specimens using the ACS iImmunoassays. The system menu will include endocrine, anemia, reproductive, cardiac, therapeutic drug, and infectious disease assays. All assays are based on chemiluminescent technology.

6. Summary of Technological Characteristics

ACS assays are dedicated for use on the ACS:180® and the ACS:Centaur utilizes acridinium ester as label and paramagnetic particles as the solid phase. Like the ACS:180®, the ACS:Centaur measures the amount of light emitted during the chemiluminescent reaction. There is direct relationship between the amount of light emitted and amount of antigen in the patient sample. The system will measure both competitive binding assays and sandwich assays.

The ACS:Centaur system uses a Master Curve and a two-point, user-initiated calibration to calibrate all the ACS assays. The Master Curve and the two-point calibration system eliminate the need to measure a full standard curve with each assay or to run calibrators each time the assay is run. The system stores the calibration for the interval specified in the assay product inserts.

Other Technological Features include:

- Photomultiplier used in the photon counting mode
- Automated pipetting of sample and reagents
- Electronic Fluid Sensing on sample and reagents
- Clog detection for samples
- Random access and batch test processing
- Varied test incubations
- Human Interface features including barcode reading, LIS, automated data reduction.
- Automated dilution capabilities

286

DEPARTMENT OF HEALTH & HUMAN SERVICES

Public Health Service

Food and Drug Administration
2098 Gaither Road
Rockville MD 20850

JUL 17 1997

Thomas F. Flynn
Manager, Regulatory Affairs & Compliance
Chiron Diagnostics Corporation
63 North Street
Medfield, Massachusetts 02052-1688

Re: K971418
ACS Centaur Analyzer
Regulatory Class: I
Product Code: JJE
Dated: June 26, 1997
Received: June 27, 1997

Dear Mr. Flynn:

We have reviewed your Section 510(k) notification of intent to market the device referenced above and we have determined the device is substantially equivalent (for the indications for use stated in the enclosure) to devices marketed in interstate commerce prior to May 28, 1976, the enactment date of the Medical Device Amendments or to devices that have been reclassified in accordance with the provisions of the Federal Food, Drug, and Cosmetic Act (Act). You may, therefore, market the device, subject to the general controls provisions of the Act. The general controls provisions of the Act include requirements for annual registration, listing of devices, good manufacturing practice, labeling, and prohibitions against misbranding and adulteration.

If your device is classified (see above) into either class II (Special Controls) or class III (Premarket Approval), it may be subject to such additional controls. Existing major regulations affecting your device can be found in the Code of Federal Regulations, Title 21, Parts 800 to 895. A substantially equivalent determination assumes compliance with the current Good Manufacturing Practice requirement, as set forth in the Quality System Regulation (QS) for Medical Devices: General regulation (21 CFR Part 820) and that, through periodic (QS) inspections, the Food and Drug Administration (FDA) will verify such assumptions. Failure to comply with the GMP regulation may result in regulatory action. In addition, FDA may publish further announcements concerning your device in the Federal Register. Please note: this response to your premarket notification submission does not affect any obligation you might have under sections 531 through 542 of the Act for devices under the Electronic Product Radiation Control provisions, or other Federal Laws or Regulations.

287

Under the Clinical Laboratory Improvement Amendments of 1988 (CLIA-88), this device may require a CLIA complexity categorization. To determine if it does, you should contact the Centers for Disease Control and Prevention (CDC) at (770) 488-7655.

This letter will allow you to begin marketing your device as described in your 510(k) premarket notification. The FDA finding of substantial equivalence of your device to a legally marketed predicate device results in a classification for your device and thus, permits your device to proceed to the market.

If you desire specific advice for your device on our labeling regulation (21 CFR Part 801 and additionally 809.10 for in vitro diagnostic devices), please contact the Office of Compliance at (301) 594-4588. Additionally, for questions on the promotion and advertising of your device, please contact the Office of Compliance at (301) 594-4639. Also, please note the regulation entitled, "Misbranding by reference to premarket notification" (21 CFR 807.97). Other general information on your responsibilities under the Act may be obtained from the Division of Small Manufacturers Assistance at its toll-free number (800) 638-2041 or (301) 443-6597 or at its internet address "http://www.fda.gov/cdrh/dsmamain.html".

Sincerely yours,

Steven Gutman

Steven I. Gutman, M.D., M.B.A.
Director
Division of Clinical
Laboratory Devices
Office of Device Evaluation
Center for Devices and
Radiological Health

Enclosure

510(k) Number (if known): _____

Device Name: **Chiron Diagnostics ACS:Centaur System**

Indications for Use:

The intended use of the ACS:Centaur system is an automated immunoassay analyzer designed to perform in vitro diagnostic immunochemical assays analysis on clinical specimens using the ACS ilmmunoassays. The system menu will include endocrine, anemia, reproductive, cardiac, therapeutic drug, and infectious disease assays. All assays are based on chemiluminescent technology.proteins and is an indirect indicator of thyroid status.[4]

(Division Sign-Off)
Division of Clinical Laboratory Devices
510(k) Number K974118

(PLEASE DO NOT WRITE BELOW THIS LINE--CONTINUE ON ANOTHER PAGE, IF NEEDED)

Concurrence of CDRH, Office of Device Evaluation (ODE)

Prescription Use ✓
(Per 21 CFR 801.109)

OR

Over-The-Counter Use _____
(Optional Format 1-2-96)

289

DEPARTMENT OF HEALTH & HUMAN SERVICES

Public Health Service

Food and Drug Administration
2098 Gaither Road
Rockville MD 20850

CH

APR 3 1998

William J. Pignato
Director of Regulatory Affairs
Chiron Diagnostics
63 North Street
Medfield, Massachusetts 02052-1688

Re: K971418
Chiron Diagnostics ACS Systems and Immunoassays
Dated: March 12, 1998
Received: March 16, 1998

Dear Mr. Pignato:

We have reviewed the information dated March 12, 1998, regarding the 510(k) notification K971418 previously submitted for the device referenced above. Based solely on the information that you have provided, it does not appear that you have significantly changed or modified the design, components, method of manufacture, or intended use of the device referenced above (see 21 CFR 807.81(a)(3)). It is, however, your responsibility to determine if the change or modification to the device or its labeling could significantly affect the device's safety or effectiveness and thus require submission of a new 510(k). The information you have supplied regarding the application of the same ACS:180 reagents (FT4, FT3, T3, T4, TSH, TSH-3, T Uptake, Total hCG, LH, FSH, Progesterone and Estradiol-6) to the ACS:Centaur in according with the FDA Guidance: "Data for Commercialization of Original Equipment Manufacturer, Secondary and Generic Reagents for Automated Analyzers", will be added to the file.

Sincerely yours,

Alfred Montgomery, D.V.M.
Acting Branch Chief, Clinical
Chemistry, Toxicology, and
Hematology Branch
Division of Clinical
Laboratory Devices
Office of Device Evaluation
Center for Devices and
Radiological Health

290

DCLD 510(K) ROUTE SLIP

K971418/A2 ADD-TO

510(k) No.: ~~K971418~~	Reviewer: CCB	Keywords:
Applicant: Chiron Diag.	Assigned: 3/19	1. SRP
Date Rec'd: 3/16	Received: 3-19	2. OEM
Branch: CLCB		3. Analyzer-Centaur
		4.

Division Last Action:

Date:	Action:	Initials:	Logout Date:
3/19	LR	D	
3/25	K.25	CCB	
3/31/98	FT	KNG	
3/31/98	letterproof	CCB	
3-31-98	[illegible]	[illegible]	

291

DEPARTMENT OF HEALTH & HUMAN SERVICES

Public Health Service
Food And Drug Administration

Memorandum

Date: 3/17/98

From: Document Mail Center (HFZ-401)

Subject: Premarket Notification Number(s): K971418 / A2

To: Division Director: CH DCLD

The attached information has been received by the 510(k) Document Mail Center (DMC), on the above referenced 510(k) submission(s). Since a final decision has been rendered, this record is officially closed.

Please review the attached document and return it to the DMC, with one of the statements checked below. Feel free to note any additional comments below.

Thank you for your cooperation.

✓ Information does not change status of the 510(k); no other action required by the DMC; please add to the image file. [THE DIVISION SHOULD PREPARE A CONFIRMATION LETTER - AN EXAMPLE IS AVAILABLE ON THE LAN (K25). THIS DOES NOT APPLY TO TRANSFER OF OWNERSHIP. PLEASE BRING ANY TRANSFER OF OWNERSHIP TO POS.]

_____ Additional information requires a new 510(k) however the information submitted is incomplete. Notify the company to submit a new 510(k). [THE DIVISION SHOULD PREPARE THE (K30) LETTER ON THE LAN.]

_____ Additional information requires a new 510(k); please process. [THIS INFORMATION WILL BE MADE INTO A NEW 510(k)].

_____ No response necessary (e.g., hard copy of fax for the truthful and accuracy statement or 510(k) statement).

This information should be returned to the DMC within 10 working days from the date of this memorandum.

Reviewed by: Carol C. Benson Received 3-19-98

Date: 3-25-98

292

3

K971418/A2

CHIRON | DIAGNOSTICS

Chiron Diagnostics Corporation
63 North Street
Medfield, Massachusetts 02052
508-359-7411 Fax 508-359-4500

March 12, 1998

FDA/CDRH/CDRH
1998 MAR 13 PM 3:02

U.S. Food and Drug Administration
Center for Devices and Radiological Heath
Document Mail Center (HFZ-401)
9200 Corporate Blvd.
Rockville, MD 20650

Re: Chrion Diagnostics ACS Systems and Immunoassays

Data for Commercialization of Original Equipment Manufacturer, Secondary and Generic Reagents for Automated Analyzers

Chiron Diagnostics is submitting the required information in accordance with the FDA Guidance: "Data for Commercialization of Original Equipment Manufacturer, Secondary and Generic Reagents for Automated Analyzers". Chiron plans to place in use the same assays currently cleared by FDA on its a ACS:180 analyzers for use on its ACS: Centaur analyzer. A chart of the comparison of features for the ACS: Centaur vs. ACS:180 is enclosed.

K971418

The first list of reagents currently approved for use on the ACS:180 and intended for use on the Centaur are following thyroid and reproductive immunoassays:

- ACS FT4 K961510
- ACS FT3 K940482
- ACS T3 K923646
- ACS T4 K905532
- ACS TSH K910981
- ACS TSH-3 K951796
- ACS T Uptake K970539
- ACS Total hCG K925277
- ACS LH K962041
- ACS FSH K904649
- ACS Progesterone K932955
- ACS Estradiol-6 K954697

ACS: 180 Systems DC# K902336/K940810 (K940810)

There are no changes in the formulation or design of the assays intended for use on both systems. Additionally, the placement of the these reagent on the ACS Centaur have been reviewed in accordance with "Deciding When to Submit a 5109k) for a

293

SK-30

Change to an Existing Device". The review determined that there were no changes requiring a new 510(k).

Testing of assays on the ACS Centaur was conducted in accordance with the enclosed Performance Study Protocol submitted on September 19, 1996 and subsequently accepted for the file by FDA. In conducting the reagent performance studies, some non-significant changes were made in the protocol having no impact on the quality of the review. These include:

(b)(4)

[redacted]

We trust this information meets the requirements of Guidance.

If there are any questions, please contact me.

Sincerely

William J. Pignato
Director of Regulatory Affairs
(508) 359-3825
(508) 359-3885

Feature	ACS:180	ACS:Centaur
QC Software	• Stored control results • L-J plotting • Statistical enhancements • Compatibility with CCD QC Reporting	• same
Specimens	• Serum or plasma, sample cups or primary tubes may be used • Dilutions allowed on a per-assay basis • Capability of Dilution of Samples Requiring Pretreatment	• same
Reagents	• Reagent volume reporting • Reagent inventory tracks bottle usage	• same
Calibrators	• 6 to 10 point stored calibration for each reagent • 2 point user run calibration • Calibrators checked with barcode • Calibrator lot numbers stored and displayed	• same
Controls	• Low, mid, and high constituent controls • Capability to dilute controls	• same
Physical	• Bench Model; 23Hx23Dx58L • 250lbs • <1200watts • Ambient temp 18-30C	• Floor Model; 60Hx42Dx58L • 1200 lbs. • <2000 watts • Ambient temp 18-30C
Other User Interface Features	• Stat interrupt capability • Improved cleaning with Extended Operation Module • Improved User Interface for scheduling batch runs, report options, easy-to-use maintenance • Complete reporting of system status and logging of system events • Tracking on-board reagent usage • Support for foreign languages • Barcode extended to 128, 2 of 5 • On-Line Information System • System test extended to include slope and offset, dilution and overrange condition •	• same
Other Performance Features	• Throughput: 180 tests/hr • Time to First Result: 15 minutes • On-board supplies for 200 tests	• Throughput: 240 tests/hr • Time to First Result: 15 min, 30 min, or 60 min depending upon assay protocol • On-board supplies for 1000 tests

Instrum. Comparison
ACS:Centaur and ACS:180

Feature	ACS:180	ACS:Centaur
Principle of Operation	• Chemiluminescence using magnetic-particle solid phase and chemiluminescent label	• same
Optical System	• PMT used in photon counting mode	• same
Temperature Control	• Reactions are controlled at 37°C	*Reactions* • Reactions controlled at 37°C *Reagent Storage* • On-board refrigeration

Dispense System	*Sample & Reagent Probes*
	• Automated pipetting of samples and reagents
	• Precision syringes (sample and reagent)
	• Fluid sensing on sample and reagent probes
	• Clog detection mechanism to alert operator to clogged sample probe
		• *Sample Probe* - same, plus
		  • disposable probe tips
		• *Reagent Probes* - same, plus
		  • fluid monitoring during aspiration

Sample and Reagent Handling	*Sample Handling* • Sample carousel with 34 outer positions and 26 inner positions • Sample tray inserts for other size sample tubes *Reagent Handling* • Reagent carousel with 26 positions (13 pairs in usual configuration)	*Sample Handling* • Sample tubes, 5 tubes per rack up to 180 samples *Reagent Handling* • Assay Reagents: Reagent compartment with 30 positions • Ancillary Reagents: Reagent compartment with 15 positions
Test Processing	• Random Access and Batch	• same

Assay Protocols	• approximately 8 minutes	• same, plus
		  • 18 minute incubation, single step
		  • 8-18 minute incubation, two step
		  • 18-18 minute incubation, two step

Human Interface / Data Output	• 9" CRT
	• External printers
	• Serial bi-directional LIS Interface
	• Audible (adjustable) beeper
	• Computer LIS Interface
		• same, plus
		  • 17" Color Monitor with Graphical User Interface
		  • External Modem for Remote Diagnostics Interface

Human Interface / Data Input	• 101 key keyboard • Hand-held barcode reader • Stationary barcode scanners for id of patient samples and reagents • Computer LIS Interface	• same
Human Interface / Data Analysis	• Automated data reduction • Assay-specific data reduction	• same

294

CIBA·CORNING

Ciba Corning Diagnostics Corp.
53 North Street
Medfield, MA 02052-1688
Telephone 508-359-7711

September 19, 1996

FDA/CDRH/ODE/DHC
1996 SEP 23 PM 3:13

U.S. Food and Drug Administration
Center for Devices and Radiological Health
Office of Device and Evaluation
Document Mail Center (HFZ-401)
9200 Corporate Blvd.
Rockville, MD 20850

Re: Performance Study Protocol for ACS:180® and 180 Plus
Document Controls # K902336 and K940810

In accordance with the Division of Clinical Laboratory Devices Guidance "Data Required for Commercialization of Primary, Secondary, and Generic Reagents for Automated Analyzers", we are submitting for the ACS:180® and ACS:180 Plus file a copy of the "Performance Study Protocol" as outline in the subject Guidance.

The previously cleared ACS systems are automated analyzers that are manufactured by Ciba Corning Diagnostics Corp. (A Chiron Company), the original equipment manufacturer (0EM). The currently approved reagents which are manufactured by or for Ciba Corning are considered Primary reagents that are dedicated for use solely on the ACS systems.

For any subsequent models of the same system, reagent performance studies will be conducted and documented for the reagents intended for the new models. The protocol which follows the requirements set forth in Table I of the Guidance is presented in the attachment.

Any new analytes not previously approved will require submission of an original 510(k). Any approved assay that is modified will be review to determined if the change(s) significantly affects the safety and effectiveness of the device. Changes will be reviewed and referenced to the FDA Guidance "Deciding when to submit a 510(k) for a Change in to an Existing Device", Draft #2 August 1, 1995.

If you have any question, please feel free to contact me.

Sincerely

William J. Pignato
Director of Regulatory Affairs
(508) 359-3825
(508) 359-3885 FAX
william.pignato@cibadiag.com

297