Records Processed under FOIA request 2016-2167; Released by CDRH on 09/06/2016

K152311

August 14, 2015

FDA/CDRH/DCC
AUG 14 2015
RECEIVED

By Messenger

510(k) Document Mail Center (WO66-G609)
Office of Device Evaluation
Center for Devices and Radiological Health
Food and Drug Administration
10903 New Hampshire Avenue
Silver Spring, MD 20993-0002

Attention: Bradley Cunningham, MS, Chief, Diagnostic and Surgical Devices Branch

Re: Traditional Premarket Notification for Oculus Optikgeraete GmbH's Pentacam® AXL

Dear Mr. Cunningham:

In accordance with Section 510(k) of the Federal Food, Drug, and Cosmetic Act ("FDC Act"), Oculus Optikgeräte GmbH ("Oculus" or the "Company"), is submitting the attached premarket notification ("510(k) Notification") for its Pentacam® AXL.

The Pentacam® AXL is designed to take photos of the anterior segment of the eye, which includes the cornea, pupil, anterior chamber and lens of the eye, using a visible light, Scheimpflug camera. The images are then used to evaluate and analyze various conditions and measurements of the eye and also to perform calculations to assist physicians in determining the power of an intraocular lens for implantation.

An electronic copy ("eCopy") is being provided with this submission, and the eCopy is an exact duplicate of the paper copy, except that it also includes a statistical data file located in the "STATISTICAL DATA" folder of the eCopy.

The OCULUS Pentacam® AXL is a rotating non-contact Scheimpflug camera including an interferometry measuring method to measure the axial length.

Device Name:	Pentacam® AXL
Center	Devices and Radiological Health
Panel	Ophthalmic
Classification Product Code	MXK, HJO
Regulation Number	886.1850
Device class	2

The Pentacam® AXL combines the functions of the Pentacam®/Pentacam® HR (K030719) with the axial length measurements of an interferometer, such as the IOLMASTER 500 (K122418). The Pentacam® AXL has otherwise not been the subject of a previous submission.

To conform with the Food and Drug Administration's ("FDA" or the "Agency") August 12, 2005, Guidance for Industry and FDA Staff: Format for Traditional and Abbreviated 510(k)s, the principal

Questions? Contact FDA/CDRH/OCE/DID at CDRH-FOISTATUS@fda.hhs.gov or 301-796-8118

Records Processed under FOIA request 2016-2167; Released by CDRH on 09/06/2016

factors concerning the design and use of the Pentacam® AXL are set forth in the following table of FDA questions.

Question	YES	NO
Is the device intended for prescription use (21 CFR 801 Subpart D)?	X	
Is the device intended for over-the-counter use (21 CFR 807 Subpart C)?		X
Does the device contain components derived from a tissue or other biologic source?		X
Is the device provided sterile?		X
Is the device intended for single use?		X
Is the device a reprocessed single use device?		X
If yes, does this device type require reprocessed validation data?		X
Does the device contain a drug?		X
Does the device contain a biologic?		X
Does the device use software?	X	
Does the submission include clinical information?		X
Is the device implanted?		X

As explained in more detail in the attached 510(k) notice, the Pentacam® AXL is substantially equivalent to Pentacam® and IOLMASTER 500 (the "Predicate Device(s)") that the Food and Drug Administration ("FDA") has already cleared. .The device was not the subject of a previous submission

In accordance with the Medical Device User Fee and Modernization Act of 2002 (MDUFMA), OCULUS Optikgeräte GmbH has submitted the required application fee of $5,018. A copy of the User Fee Cover Sheet is provided with the attached premarket notification.

OCULUS Optikgeräte GmbH considers its intent to market the Pentacam® AXL as confidential commercial information. The Company has not disclosed its intent to market this device to anyone except its employees, others with a financial interest in the Company, its advertising or law firms, and its consultants. The Company, therefore requests that FDA not disclose the existence of this application until such time as final action on the submission is taken.

Oculus considers its intent to market the Pentacam® AXL to be confidential commercial information. The Company has not disclosed its intent to market this device to anyone except its employees, others with a financial interest in the Company, its advertising or law firms, and its consultants. The Company, therefore, requests that FDA not disclose the existence of this application until such time as final action on the submission is taken.

In addition, some of the material in this application may be trade secret or confidential commercial or financial information within the meaning of 21 C.F.R. § 20.61 and therefore not discloseable under the Freedom of Information Act even after the existence of this application becomes public. We ask

Questions? Contact FDA/CDRH/OCE/DID at CDRH-FOISTATUS@fda.hhs.gov or 301-796-8118

Records Processed under FOIA request 2016-2167; Released by CDRH on 09/06/2016

that you consult with the Company as provided in 21 C.F.R. § 20.45 before making any part of this submission publicly available.

We trust that the information provided in the 510(k) notice is sufficient for FDA to find the Pentacam® AXL substantially equivalent to its predicate devices for the listed indication. If you have any additional questions regarding the 510(k) notice, please contact me at the phone number below or Randy Prebula at (202) 637-6548.

Sincerely,

Eckhard Loh

Head of Quality and Regulatory Affairs

OCULUS Optikgeräte GmbH
Muencholzhaeuserstrasse 29
35582 Wetzlar
Germany

Phone: +49(0) 641-2005-536
Fax: +49(0) 641-2005-280

Attachments

cc: Randy Prebula, Partner, Hogan Lovells US LLP
Lina Kontos, Counsel, Hogan Lovells US LLP

Records Processed under FOIA request 2016-2167; Released by CDRH on 09/06/2016

K152311

FDA/CDRH/DCC
AUG 14 2015
RECEIVED

August 14, 2015

By Messenger

510(k) Document Mail Center (WO66-G609)
Office of Device Evaluation
Center for Devices and Radiological Health
Food and Drug Administration
10903 New Hampshire Avenue
Silver Spring, MD 20993-0002

Attention: Bradley Cunningham, MS, Chief, Diagnostic and Surgical Devices Branch

Re: Traditional Premarket Notification for Oculus Optikgeraete GmbH's Pentacam® AXL

Dear Mr. Cunningham:

In accordance with Section 510(k) of the Federal Food, Drug, and Cosmetic Act ("FDC Act"), Oculus Optikgeräte GmbH ("Oculus" or the "Company"), is submitting the attached premarket notification ("510(k) Notification") for its Pentacam® AXL.

The Pentacam® AXL is designed to take photos of the anterior segment of the eye, which includes the cornea, pupil, anterior chamber and lens of the eye, using a visible light, Scheimpflug camera. The images are then used to evaluate and analyze various conditions and measurements of the eye and also to perform calculations to assist physicians in determining the power of an intraocular lens for implantation.

An electronic copy ("eCopy") is being provided with this submission, and the eCopy is an exact duplicate of the paper copy, except that it also includes a statistical data file located in the "STATISTICAL DATA" folder of the eCopy.

The OCULUS Pentacam® AXL is a rotating non-contact Scheimpflug camera including an interferometry measuring method to measure the axial length.

Device Name:	Pentacam® AXL
Center	Devices and Radiological Health
Panel	Ophthalmic
Classification Product Code	MXK, HJO
Regulation Number	886.1850
Device class	2

The Pentacam® AXL combines the functions of the Pentacam®/Pentacam® HR (K030719) with the axial length measurements of an interferometer, such as the IOLMASTER 500 (K122418). The Pentacam® AXL has otherwise not been the subject of a previous submission.

To conform with the Food and Drug Administration's ("FDA" or the "Agency") August 12, 2005, Guidance for Industry and FDA Staff: Format for Traditional and Abbreviated 510(k)s, the principal

Questions? Contact FDA/CDRH/OCE/DID at CDRH-FOISTATUS@fda.hhs.gov or 301-796-8118

Records Processed under FOIA request 2016-2167; Released by CDRH on 09/06/2016

factors concerning the design and use of the Pentacam® AXL are set forth in the following table of FDA questions.

Question	YES	NO
Is the device intended for prescription use (21 CFR 801 Subpart D)?	X	
Is the device intended for over-the-counter use (21 CFR 807 Subpart C)?		X
Does the device contain components derived from a tissue or other biologic source?		X
Is the device provided sterile?		X
Is the device intended for single use?		X
Is the device a reprocessed single use device?		X
If yes, does this device type require reprocessed validation data?		X
Does the device contain a drug?		X
Does the device contain a biologic?		X
Does the device use software?	X	
Does the submission include clinical information?		X
Is the device implanted?		X

As explained in more detail in the attached 510(k) notice, the Pentacam® AXL is substantially equivalent to Pentacam® and IOLMASTER 500 (the "Predicate Device(s)") that the Food and Drug Administration ("FDA") has already cleared. .The device was not the subject of a previous submission

In accordance with the Medical Device User Fee and Modernization Act of 2002 (MDUFMA), OCULUS Optikgeräte GmbH has submitted the required application fee of $5,018. A copy of the User Fee Cover Sheet is provided with the attached premarket notification.

OCULUS Optikgeräte GmbH considers its intent to market the Pentacam® AXL as confidential commercial information. The Company has not disclosed its intent to market this device to anyone except its employees, others with a financial interest in the Company, its advertising or law firms, and its consultants. The Company, therefore requests that FDA not disclose the existence of this application until such time as final action on the submission is taken.

Oculus considers its intent to market the Pentacam® AXL to be confidential commercial information. The Company has not disclosed its intent to market this device to anyone except its employees, others with a financial interest in the Company, its advertising or law firms, and its consultants. The Company, therefore, requests that FDA not disclose the existence of this application until such time as final action on the submission is taken.

In addition, some of the material in this application may be trade secret or confidential commercial or financial information within the meaning of 21 C.F.R. § 20.61 and therefore not discloseable under the Freedom of Information Act even after the existence of this application becomes public. We ask

Questions? Contact FDA/CDRH/OCE/DID at CDRH-FOISTATUS@fda.hhs.gov or 301-796-8118

Records Processed under FOIA request 2016-2167; Released by CDRH on 09/06/2016

that you consult with the Company as provided in 21 C.F.R. § 20.45 before making any part of this submission publicly available.

We trust that the information provided in the 510(k) notice is sufficient for FDA to find the Pentacam® AXL substantially equivalent to its predicate devices for the listed indication. If you have any additional questions regarding the 510(k) notice, please contact me at the phone number below or Randy Prebula at (202) 637-6548.

Sincerely,

Eckhard Loh

Head of Quality and Regulatory Affairs

OCULUS Optikgeräte GmbH
Muencholzhaeuserstrasse 29
35582 Wetzlar
Germany

Phone: +49(0) 641-2005-536
Fax: +49(0) 641-2005-280

Attachments

cc: Randy Prebula, Partner, Hogan Lovells US LLP
Lina Kontos, Counsel, Hogan Lovells US LLP

Records Processed under FOIA request 2016-2167; Released by CDRH on 09/06/2016

Error - Couldn't merge file with following reason - Rebuild failed: trailer not found.; Original message: PDF startxref not found.

09002621826a2323.pdf

System attempted to attach the file. Please look at attachments to open this file manually.

Questions? Contact FDA/CDRH/OCE/DID at CDRH-FOISTATUS@fda.hhs.gov or 301-796-8118

Records Processed under FOIA request 2016-2167; Released by CDRH on 09/06/2016

OCULUS Optikgeräte GmbH

Pentacam® AXL

510(k) Premarket Notification

OCULUS Optikgeräte GmbH
Müncholzhäuser Str. 29
35582 Wetzlar
Germany

Questions? Contact FDA/CDRH/OCE/DID at CDRH-FOISTATUS@fda.hhs.gov or 301-796-8118

Records Processed under FOIA request 2016-2167; Released by CDRH on 09/06/2016

TABLE OF CONTENTS

Page

I. MEDICAL DEVICE USER FEE **6**

II. CDRH PREMARKET REVIEW SUBMISSION COVER SHEET **9**

III. COVER LETTER **14**

IV. REFUSE TO ACCEPT CHECKLIST **18**

V. INDICATIONS FOR USE STATEMENT **46**

VI. 510(K) SUMMARY **48**

VII. TRUTHFUL AND ACCURATE STATEMENT **59**

VIII. CLASS III SUMMARY AND CERTIFICATION **61**

IX. CERTIFICATION OF COMPLIANCE WITH CLINICAL TRIALS.GOV DATA BANK **62**

X. FINANCIAL DISCLOSURES **65**

XI. DECLARATIONS OF CONFORMITY AND SUMMARY REPORTS **67**

XII. EXECUTIVE SUMMARY **68**

A. INTENDED USE/INDICATIONS FOR USE 68

B. DEVICE DESCRIPTION 68

C. PERFORMANCE DATA 70

D. CLINICAL DATA 70

1. Agreement Study 1: Pentacam AXL vs. IOL Master (K122418) *71*

2. Agreement Study 2: Pentacam AXL vs. Pentacam (K030719) *71*

3. In-house precision testing *72*

E. SUBSTANTIAL EQUIVALENCE 72

XIII. DEVICE DESCRIPTION **76**

A. INTENDED USE/INDICATION FOR USE 76

B. PATIENT POPULATION/MEDICAL CONDITION 76

C. TECHNOLOGICAL CHARACTERISTICS 77

1. Device Components and System Configuration 77

D. PRINCIPLES OF OPERATION 80

1. Device alignment 80

2. Scheimpflug imaging 82

3. Axial length measurement 85

4. White-to-white measurement 86

5. IOL power calculations 87

E. TECHNICAL DETAILS 88

1. Technical/engineering drawings/pictures 88

2. Materials 90

3. Technical specifications 90

4. Components/Accessories 92

XIV. SUBSTANTIAL EQUIVALENCE 94

XV. LABELING 99

XVI. STERILIZATION AND SHELF LIFE 100

A. CLEANING 100

B. DISINFECTION 100

C. STERILIZATION 101

D. SHELF LIFE EXPECTANCY 101

XVII. BIOCOMPATIBILITY 102

XVIII. SOFTWARE 104

XIX. ELECTROMAGNETIC COMPATIBILITY AND ELECTRICAL SAFETY 105

A. ELECTRICAL SAFETY REPORT 105

B. ELECTROMAGNETIC COMPATIBILITY 105

XX. PERFORMANCE TESTING - BENCH 106

XXI. PERFORMANCE TESTING - ANIMAL 107

XXII. PERFORMANCE TESTING - CLINICAL 108

1. Agreement Study 1: Pentacam AXL vs. IOL Master (K122418) 108

2. Agreement Study 2: Pentacam AXL vs. Pentacam (K030719) 109

3. In-house precision testing 110

LIST OF ATTACHMENTS

- Attachment 1. Standards Data Report Forms
  - IEC 60601-1
  - IEC 60601-1-2
  - EN ISO 15004-1
  - EN ISO 15004-2
  - IEC 60825-1
  - ISO 22665
- Attachment 2. Labeling
- Attachment 3. Software Documentation
  - Software Description FB KON-045 1
  - Software Safety Classification FB KON-046 2
  - Device Hazard Analysis
  - Software Requirement Specification (SRS) FB KON-047 3
  - Software Verification and Validation Record FB KON-050 4
  - Software Traceability Matrix FB KON-056 5
  - Software Revision Level History FB KON-028 6
  - Annex - Release Documents
    - Software Change FB KON-020
    - Software Test Protocol FB KON-030
    - Software Release FB KON-021
- Attachment 4. Electrical Safety Test Report
- Attachment 5. EMC Test Report
- Attachment 6. ISO 15004-1:2006: Ophthalmic Instruments – Fundamental Requirements and Test Methods; Part 1: General Requirements Applicable to all Ophthalmic Instruments
- Attachment 7. ISO 15004-2:2007-06: Ophthalmic Instruments - Fundamental Requirements and Test Methods; Part 2: Light Hazard Protection

- Attachment 8. IEC 60825-1, 2007: Safety of laser products; Part 1: Equipment classification, requirements and user's guide; Section two: manufacturing requirements.

- Attachment 9. ISO 22665:2012 – Ophthalmic Optics and Instruments - Instruments to Measure Axial Distances in the Eye and to Demonstrate Accuracy and Reproducibility in the Stated Measuring Range of 14-40 mm.

- Attachment 10. Protocols for Agreement and Precision Studies
    - Agreement Study 1
    - Agreement Study 2
    - Precision Study

Attachment 11. Clinical Studies Report

The following information is provided as required by 21 C.F.R. § 807.87 for OCULUS Optikgeräte GmbH's Pentacam® AXL 510(k) premarket notification:

I. MEDICAL DEVICE USER FEE

The Company has remitted the Medical Device User Fee of $ 5,018 concurrent with this submission to the Food and Drug Administration, P.O. Box 956733, St. Louis, MO 63195-6733. A copy of the Medical Device User Fee Cover Page is provided on the following pages.

Records Processed under FOIA request 2016-2167; Released by CDRH on 09/06/2016

Form Approved: OMB No. 0910-0511 Expiration Date: April 30, 2016. See Instructions for OMB Statement.

DEPARTMENT OF HEALTH AND HUMAN SERVICES FOOD AND DRUG ADMINISTRATION **MEDICAL DEVICE USER FEE COVER SHEET**	PAYMENT IDENTIFICATION NUMBER: (b)(4) [redacted] Write the Payment Identification number on your check.

A completed cover sheet must accompany each original application or supplement subject to fees. If payment is sent by U.S. mail or courier, please include a copy of this completed form with payment. Payment and mailing instructions can be found at: http://www.fda.gov/oc/mdufma/coversheet.html

1. COMPANY NAME AND ADDRESS (include name, street address, city state, country, and post office code)	2. CONTACT NAME
OCULUS OPTIKGERAETE GMBH Münchholzhäuser Str. 29 35582 Wetzlar DE	Eckhard Loh 2.1 E-MAIL ADDRESS e.loh@oculus.de 2.2 TELEPHONE NUMBER (include Area code) 0641 2502725 2.3 FACSIMILE (FAX) NUMBER (Include Area code)
1.1 EMPLOYER IDENTIFICATION NUMBER (EIN)	

3. TYPE OF PREMARKET APPLICATION (Select one of the following in each column; if you are unsure, please refer to the application descriptions at the following web site: http://www.fda.gov/MedicalDevices/DeviceRegulationandGuidance/GuidanceDocuments/ucm345263.htm

Select an application type:	3.1 Select a center
[X] Premarket notification(510(k)); except for third party	[X] CDRH
[ ] 513(g) Request for Information	[ ] CBER
[ ] Biologics License Application (BLA)	3.2 Select one of the types below
[ ] Premarket Approval Application (PMA)	[X] Original Application
[ ] Modular PMA	Supplement Types:
[ ] Product Development Protocol (PDP)	[ ] Efficacy (BLA)
[ ] Premarket Report (PMR)	[ ] Panel Track (PMA, PMR, PDP)
[ ] 30-Day Notice	[ ] Real-Time (PMA, PMR, PDP)
	[ ] 180-day (PMA, PMR, PDP)

4. ARE YOU A SMALL BUSINESS? (See the instructions for more information on determining this status)

[ ] YES, I meet the small business criteria and have submitted the required qualifying documents to FDA

[X] NO, I am not a small business

4.1 If Yes, please enter your Small Business Decision Number:

5. FDA WILL NOT ACCEPT YOUR SUBMISSION IF YOUR COMPANY HAS NOT PAID AN ESTABLISHMENT REGISTRATION FEE THAT IS DUE TO FDA. HAS YOUR COMPANY PAID ALL ESTABLISHMENT REGISTRATION FEES THAT ARE DUE TO FDA?

[X] YES (All of our establishments have registered and paid the fee, or this is our first device, and we will register and pay the fee within 30 days of FDA's approval/clearance of this device.)

[ ] NO (If "NO," FDA will not accept your submission until you have paid all fees due to FDA. This submission will not be processed; see http://www.fda.gov/cdrh/mdufma for additional information)

6. IS THIS PREMARKET APPLICATION COVERED BY ANY OF THE FOLLOWING USER FEE EXCEPTIONS? IF SO, CHECK THE APPLICABLE EXCEPTION.

[ ] This application is the first PMA submitted by a qualified small business, including any affiliates	[ ] The sole purpose of the application is to support conditions of use for a pediatric population
[ ] This biologics application is submitted under section 351 of the Public Health Service Act for a product licensed for further manufacturing use only	[ ] The application is submitted by a state or federal government entity for a device that is not to be distributed commercially

7. IS THIS A SUPPLEMENT TO A PREMARKET APPLICATION FOR WHICH FEES WERE WAIVED DUE TO SOLE USE IN A PEDIATRIC POPULATION THAT NOW PROPOSES CONDITION OF USE FOR ANY ADULT POPULATION? (If so, the application is subject to the fee that applies for an original premarket approval application (PMA).

Records Processed under FOIA request 2016-2167; Released by CDRH on 09/06/2016

[ ] YES [X] NO

PAPERWORK REDUCTION ACT STATEMENT
Public reporting burden for this collection of information is estimated to average 18 minutes per response, including the time for reviewing instructions, searching existing data sources, gathering and maintaining the data needed, and completing and reviewing the collection of information. Send comments regarding this burden estimate or any other aspect of this collection of information, including suggestions for reducing this burden, to the address below.

Department of Health and Human Services, Food and Drug Administration, Office of Chief Information Officer, 8455 Colesville Road, COLE-14-14253 Silver Spring, MD 20993-0002
[Please do NOT return this form to the above address, except as it pertains to comments on the burden estimate.]

8. USER FEE PAYMENT AMOUNT SUBMITTED FOR THIS PREMARKET APPLICATION
(b)(4) [redacted]
30-Jul-2015

Form FDA 3601 (05/13)

"Close Window" Print Cover sheet

Questions? Contact FDA/CDRH/OCE/DID at CDRH-FOISTATUS@fda.hhs.gov or 301-796-8118

Records Processed under FOIA request 2016-2167, Released by CDRH on 09/06/2016

DEPARTMENT OF HEALTH AND HUMAN SERVICES
FOOD AND DRUG ADMINISTRATION

CDRH PREMARKET REVIEW SUBMISSION COVER SHEET

Form Approval
OMB No. 9010-0120
Expiration Date: December 31, 2013
See OMB Statement on page 5.

Date of Submission	User Fee Payment ID Number	FDA Submission Document Number *(if known)*
August 14, 2015	(b)(4) [redacted]	

SECTION A TYPE OF SUBMISSION

PMA	PMA & HDE Supplement	PDP	510(k)	Meeting
☐ Original Submission	☐ Regular (180 day)	☐ Original PDP	☒ Original Submission:	☐ Pre-510(K) Meeting
☐ Premarket Report	☐ Special	☐ Notice of Completion	☒ Traditional	☐ Pre-IDE Meeting
☐ Modular Submission	☐ Panel Track (PMA Only)	☐ Amendment to PDP	☐ Special	☐ Pre-PMA Meeting
☐ Amendment	☐ 30-day Supplement		☐ Abbreviated Complete section I, Page 5)	☐ Pre-PDP Meeting
☐ Report	☐ 30-day Notice		☐ Additional Information	☐ Day 100 Meeting
☐ Report Amendment	☐ 135-day Supplement		☐ Third Party	☐ Agreement Meeting
☐ Licensing Agreement	☐ Real-time Review			☐ Determination Meeting
	☐ Amendment to PMA & HDE Supplement			☐ Other *(specify)*:
	☐ Other			

IDE	Humanitarian Device Exemption (HDE)	Class II Exemption Petition	Evaluation of Automatic Class III Designation (De Novo)	Other Submission
☐ Original Submission	☐ Original Submission	☐ Original Submission	☐ Original Submission	☐ 513(g)
☐ Amendment	☐ Amendment	☐ Additional Information	☐ Additional Information	☐ Other *(describe submission)*:
☐ Supplement	☐ Supplement			
	☐ Report			
	☐ Report Amendment			

Have you used or cited Standards in your submission? ☒ Yes ☐ No *(If Yes, please complete Section I, Page 5)*

SECTION B SUBMITTER, APPLICANT OR SPONSOR

Company / Institution Name OCULUS Optikgeräte GmbH	Establishment Registration Number *(if known)* 9611269		
Division Name *(if applicable)*	Phone Number *(including area code)* +49 64120050		
Street Address *Münchholzhäuser Straße 29*	FAX Number *(including area code)* +49 6412005255		
City Wetzlar	State / Province Hesse	ZIP/Postal Code 35582	Country Germany
Contact Name Eckhard Loh			
Contact Title Head of Quality and Regulatory Affairs	Contact E-mail Address E.Loh@oculus.de		

SECTION C APPLICATION CORRESPONDENT (e.g., consultant, if different from above)

Company / Institution Name Hogan Lovells US LLP			
Division Name *(if applicable)*	Phone Number *(including area code)* 202-647-6548		
Street Address 555 Thirteenth Street NW	FAX Number *(including area code)* 202-637-5910		
City Washington	State / Province DC	ZIP/Postal Code 20016	Country USA
Contact Name Randy Prebula			
Contact Title Partner	Contact E-mail Address randy.prebula@hoganlovells.com		

Questions? Contact FDA/CDRH/OCE/DID at CDRH-FOISTATUS@fda.hhs.gov or 301-796-8118

Records Processed under FOIA request 2016-2167; Released by CDRH on 09/06/2016

SECTION D1 REASON FOR APPLICATION - PMA, PDP, OR HDE

- ☐ New Device
- ☐ Withdrawal
- ☐ Additional or Expanded Indications
- ☐ Request for Extension
- ☐ Post-approval Study Protocol
- ☐ Request for Applicant Hold
- ☐ Request for Removal of Applicant Hold
- ☐ Request to Remove or Add Manufacturing Site

- ☐ Change in design, component, or specification:
  - ☐ Software / Hardware
  - ☐ Color Additive
  - ☐ Material
  - ☐ Specifications
  - ☐ Other *(specify below)*

- ☐ Location change:
  - ☐ Manufacturer
  - ☐ Sterilizer
  - ☐ Packager

- ☐ Process change:
  - ☐ Manufacturing ☐ Packaging
  - ☐ Sterilization
  - ☐ Other *(specify below)*

- ☐ Labeling change:
  - ☐ Indications
  - ☐ Instructions
  - ☐ Performance Characteristics
  - ☐ Shelf Life
  - ☐ Trade Name
  - ☐ Other *(specify below)*

- ☐ Report Submission:
  - ☐ Annual or Periodic
  - ☐ Post-approval Study
  - ☐ Adverse Reaction
  - ☐ Device Defect
  - ☐ Amendment

- ☐ Response to FDA correspondence:

- ☐ Change in Ownership
- ☐ Change in Correspondent
- ☐ Change of Applicant Address

☐ Other Reason *(specify)*:

SECTION D2 REASON FOR APPLICATION – IDE

- ☐ New Device
- ☐ New Indication
- ☐ Addition of Institution
- ☐ Expansion / Extension of Study
- ☐ IRB Certification
- ☐ Termination of Study
- ☐ Withdrawal of Application
- ☐ Unanticipated Adverse Effect
- ☐ Notification of Emergency Use
- ☐ Compassionate Use Request
- ☐ Treatment IDE
- ☐ Continued Access

- ☐ Change in:
  - ☐ Correspondent / Applicant
  - ☐ Design / Device
  - ☐ Informed Consent
  - ☐ Manufacturer
  - ☐ Manufacturing Process
  - ☐ Protocol - Feasibility
  - ☐ Protocol - Other
  - ☐ Sponsor

- ☐ Report submission:
  - ☐ Current Investigator
  - ☐ Annual Progress Report
  - ☐ Site Waiver Report
  - ☐ Final

- ☐ Response to FDA Letter Concerning:
  - ☐ Conditional Approval
  - ☐ Deemed Approved
  - ☐ Deficient Final Report
  - ☐ Deficient Progress Report
  - ☐ Deficient Investigator Report
  - ☐ Disapproval
  - ☐ Request Extension of Time to Respond to FDA
  - ☐ Request Meeting
  - ☐ Request Hearing

☐ Other Reason *(specify)*:

SECTION D3 REASON FOR SUBMISSION - 510(k)

- ☒ New Device
- ☐ Additional or Expanded Indications
- ☐ Change in Technology

☐ Other Reason *(specify)*:

Questions? Contact FDA/CDRH/OCE/DID at CDRH-FOISTATUS@fda.hhs.gov or 301-796-8118

SECTION E ADDITIONAL INFORMATION ON 510(K) SUBMISSIONS

Product codes of devices to which substantial equivalence is claimed

1	MXK	2	HJO	3		4	
5		6		7		8	

Summary of, or statement concerning, safety and effectiveness information
☒ 510 (k) summary attached
☐ 510 (k) statement

Information on devices to which substantial equivalence is claimed *(if known)*

	510(k) Number		*Trade or Proprietary or Model Name*		*Manufacturer*
1	K122418	1	OLMASTER 500	1	Carl Zeiss Meditec AG
2	K030719	2	Pentacam Scheimpflug Camera	2	OCULUS Optikgeräte GmbH
3		3		3	
4		4		4	
5		5		5	
6		6		6	

SECTION F PRODUCT INFORMATION - APPLICATION TO ALL APPLICATIONS

Common or usual name or classification
AC-powered slitlamp biomicroscope

	Trade or Proprietary or Model Name for This Device		Model Number
1	Pentacam® AXL	1	70100
2		2	
3		3	
4		4	
5		5	

FDA document numbers of all prior related submissions (regardless of outcome)

1 N/A	2	3	4	5	6
7	8	9	10	11	12

Data Included in Submission
☒ Laboratory Testing ☐ Animal Trials ☒ Human Trials

SECTION G PRODUCT CLASSIFICATION - APPLICATION TO ALL APPLICATIONS

Product Code
MXK

C.F.R. Section *(if applicable)*
21 C.F.R. § 886.1850

Device Class
☐ Class I ☒ Class II
☐ Class III ☐ Unclassified

Classification Panel
Ophthalmic

Indications *(from labeling)*
See indications for use statement in Section V

Records Processed under FOIA request 2016-2167, Released by CDRH on 09/06/2016

Note: Submission of this information does not substitute the need to submit a 2891a Device Establishment Registration form.	FDA Document Number *(if known)*

SECTION H MANUFACTURING / PACKAGING / STERILIZATION SITES RELATING TO A SUBMISSION

☒ Original ☐ Add ☐ Delete	Facility Establishment Identifier (FEI) Number	☒ Manufacturer ☐ Contract Sterilizer ☐ Contract Manufacturer ☐ Repackager / Relabeler		
Company / Institution Name OCULUS Optikgeräte GmbH		Establishment Registration Number 9611269		
Division Name *(if applicable)*		Phone Number *(including area code)* +49 64120050		
Street Address Münchholzhäuser Straße 29		FAX Number *(including area code)* +49 6412005255		
City Wetzlar		State / Province Hesse	ZIP Code 35582	Country Germany
Contact Name Eckhard Loh	Contact Title Head of Quality and Regulatory Affairs		Contact E-mail Address E.Loh@oculus.de	

☐ Original ☐ Add ☐ Delete	Facility Establishment Identifier (FEI) Number	☐ Manufacturer ☐ Contract Sterilizer ☐ Contract Manufacturer ☐ Repackager / Relabeler		
Company / Institution Name		Establishment Registration Number		
Division Name *(if applicable)*		Phone Number *(including area code)*		
Street Address		FAX Number *(including area code)*		
City		State / Province	ZIP Code	Country
Contact Name	Contact Title		Contact E-mail Address	

☐ Original ☐ Add ☐ Delete	Facility Establishment Identifier (FEI) Number	☐ Manufacturer ☐ Contract Sterilizer ☐ Contract Manufacturer ☐ Repackager / Relabeler		
Company / Institution Name		Establishment Registration Number		
Division Name *(if applicable)*		Phone Number *(including area code)*		
Street Address		FAX Number *(including area code)*		
City		State / Province	ZIP Code	Country
Contact Name	Contact Title		Contact E-mail Address	

SECTION I UTILIZATION OF STANDARDS

Note: Complete this section if your application or submission cites standards or includes a *"Declaration of Conformity to a Recognized Standard"* statement.

1	Standards No. IEC 60601-1	Standards Organization IEC	Standards Title Medical electrical equipment.-.Part 1: General requirements for basic safety and essential performance	Version IEC 60601-1:2005 + cor.: 2006 + cor.: 2007	Date 2007
2	Standards No. IEC 60601-1-2	Standards Organization IEC	Standards Title Medical electrical equipment – Part 1-2: General Requirements for basic safety – Collateral standard: Electromagnetic compatibility Requirements and tests	Version IEC 60601-1-2:2007, modified	Date 2007
3	Standards No. EN ISO 15004-1	Standards Organization ISO	Standards Title Ophthalmic Instruments – Fundamental requirements and test methods – Part1: General requirements applicable to all ophthalmic instruments	Version EN ISO 15004-1:2006	Date 2006
5	Standards No. EN ISO 15004-2	Standards Organization ISO	Standards Title Ophthalmic Instruments – Fundamental requirements and test methods – Part2: Light hazard protection.	Version EN ISO 15004-2:2007	Date 2007
6	Standards No. IEC 60825-1	Standards Organization IEC	Standards Title Safety of laser products Part 1: Equipment classification, requirements and user's guide Section two: Manufacturing requirements	Version IEC 60825-1 : 2007	Date 2007
7	Standards No. ISO 22665	Standards Organization ISO	Standards Title Ophthalmic optics and instruments - Instruments to measure axial distances in the eye	Version ISO 22665:2012	Date 2012
8	Standards No.	Standards Organization	Standards Title	Version	Date

Please include any additional standards to be cited on a separate page.

This section applies only to requirements of the Paperwork Reduction Act of 1995.
DO NOT SEND YOUR COMPLETED FORM TO THE PRA STAFF ADRESS BELOW.

The burden time for this collection of information is estimated to average 0.5 hour per response, including the time to review instructions, search existing data sources, gather and maintain the data needed and complete and review the collection of information. Send comments regarding this burden estimate or any other aspect of this collection of information, including suggestions for reducing this burden to:

Department of Health and Human Services
Food and Drug Administration
Office of Chief Information Officer
Paperwork Reduction Act (PRA) Staff
1350 Piccard Drive, Room 400
Rockville, MD 20850

An agency may not conduct or sponsor, and a person is not required to respond to, a collection of information unless it displays a currently valid OMB control number.

Records Processed under FOIA request 2016-2167; Released by CDRH on 09/06/2016

III. COVER LETTER

The cover letter for the submission is provided on the following pages

Questions? Contact FDA/CDRH/OCE/DID at CDRH-FOISTATUS@fda.hhs.gov or 301-796-8118

August 14, 2015

By Messenger

510(k) Document Mail Center (WO66-G609)
Office of Device Evaluation
Center for Devices and Radiological Health
Food and Drug Administration
10903 New Hampshire Avenue
Silver Spring, MD 20993-0002

Attention: Bradley Cunningham, MS, Chief, Diagnostic and Surgical Devices Branch

Re: Traditional Premarket Notification for Oculus Optikgeraete GmbH's Pentacam® AXL

Dear Mr. Cunningham:

In accordance with Section 510(k) of the Federal Food, Drug, and Cosmetic Act ("FDC Act"), Oculus Optikgeräte GmbH ("Oculus" or the "Company"), is submitting the attached premarket notification ("510(k) Notification") for its Pentacam® AXL.

The Pentacam® AXL is designed to take photos of the anterior segment of the eye, which includes the cornea, pupil, anterior chamber and lens of the eye, using a visible light, Scheimpflug camera. The images are then used to evaluate and analyze various conditions and measurements of the eye and also to perform calculations to assist physicians in determining the power of an intraocular lens for implantation.

An electronic copy ("eCopy") is being provided with this submission, and the eCopy is an exact duplicate of the paper copy, except that it also includes a statistical data file located in the "STATISTICAL DATA" folder of the eCopy.

The OCULUS Pentacam® AXL is a rotating non-contact Scheimpflug camera including an interferometry measuring method to measure the axial length.

Device Name:	Pentacam® AXL
Center	Devices and Radiological Health
Panel	Ophthalmic
Classification Product Code	MXK, HJO
Regulation Number	886.1850
Device class	2

The Pentacam® AXL combines the functions of the Pentacam®/Pentacam® HR (K030719) with the axial length measurements of an interferometer, such as the IOLMASTER 500 (K122418). The Pentacam® AXL has otherwise not been the subject of a previous submission.

To conform with the Food and Drug Administration's ("FDA" or the "Agency") August 12, 2005, Guidance for Industry and FDA Staff: Format for Traditional and Abbreviated 510(k)s, the principal

Records Processed under FOIA request 2016-2167; Released by CDRH on 09/06/2016

factors concerning the design and use of the Pentacam® AXL are set forth in the following table of FDA questions.

Question	YES	NO
Is the device intended for prescription use (21 CFR 801 Subpart D)?	X	
Is the device intended for over-the-counter use (21 CFR 807 Subpart C)?		X
Does the device contain components derived from a tissue or other biologic source?		X
Is the device provided sterile?		X
Is the device intended for single use?		X
Is the device a reprocessed single use device?		X
If yes, does this device type require reprocessed validation data?		X
Does the device contain a drug?		X
Does the device contain a biologic?		X
Does the device use software?	X	
Does the submission include clinical information?		X
Is the device implanted?		X

As explained in more detail in the attached 510(k) notice, the Pentacam® AXL is substantially equivalent to Pentacam® and IOLMASTER 500 (the “Predicate Device(s)”) that the Food and Drug Administration (“FDA”) has already cleared. .The device was not the subject of a previous submission

In accordance with the Medical Device User Fee and Modernization Act of 2002 (MDUFMA), OCULUS Optikgeräte GmbH has submitted the required application fee of $5,018. A copy of the User Fee Cover Sheet is provided with the attached premarket notification.

OCULUS Optikgeräte GmbH considers its intent to market the Pentacam® AXL as confidential commercial information. The Company has not disclosed its intent to market this device to anyone except its employees, others with a financial interest in the Company, its advertising or law firms, and its consultants. The Company, therefore requests that FDA not disclose the existence of this application until such time as final action on the submission is taken.

Oculus considers its intent to market the Pentacam® AXL to be confidential commercial information. The Company has not disclosed its intent to market this device to anyone except its employees, others with a financial interest in the Company, its advertising or law firms, and its consultants. The Company, therefore, requests that FDA not disclose the existence of this application until such time as final action on the submission is taken.

In addition, some of the material in this application may be trade secret or confidential commercial or financial information within the meaning of 21 C.F.R. § 20.61 and therefore not discloseable under the Freedom of Information Act even after the existence of this application becomes public. We ask

Records Processed under FOIA request 2016-2167; Released by CDRH on 09/06/2016

that you consult with the Company as provided in 21 C.F.R. § 20.45 before making any part of this submission publicly available.

We trust that the information provided in the 510(k) notice is sufficient for FDA to find the Pentacam® AXL substantially equivalent to its predicate devices for the listed indication. If you have any additional questions regarding the 510(k) notice, please contact me at the phone number below or Randy Prebula at (202) 637-6548.

Sincerely,

Eckhard Loh

Head of Quality and Regulatory Affairs

OCULUS Optikgeräte GmbH
Muencholzhaeuserstrasse 29
35582 Wetzlar
Germany

Phone: +49(0) 641-2005-536
Fax: +49(0) 641-2005-280

Attachments

cc: Randy Prebula, Partner, Hogan Lovells US LLP
Lina Kontos, Counsel, Hogan Lovells US LLP

IV. REFUSE TO ACCEPT CHECKLIST

To conform to the agency's December 31, 2012, Guidance for Industry and FDA Staff: Refuse to Accept Policy for 510(k)s, this section of this submission includes the agency's Refuse to Accept checklist and a guide to where in the submission the elements required for a complete 510(k) submission per 21 C.F.R. 807.27 are included in this submission as follows:

A. Preliminary Questions		
B. Answers in the shaded blocks indicate consultation with Center advisor is needed.	**Yes**	**No**
C. 1. Is the product a device (per section 201(h) of the FD&C Act) or a combination product (per 21 CFR 3.2(e)) with a device constituent part subject to review in a 510(k)? If it appears not to be a device (per section 201(h) of the FD&C Act) or such a combination product, or you are unsure, consult with the CDRH Jurisdictional Officer or the CBER Office Jurisdiction Liaison to determine the appropriate action, and inform division management. *Provide a summary of the Jurisdictional Officer's/Liaison's determination*. If the product does not appear to be a device or such a combination product, mark "No."	**X**	
Comments:		
D. 2. Is the application with the appropriate Center? If the product is a device or a combination product with a device constituent part, is it subject to review by the Center in which the submission was received? If you believe the application is not with the appropriate Center or you are unsure, consult with the CDRH Jurisdictional Officer or CBER Office Jurisdiction Liaison to determine the appropriate action and inform your division management. *Provide a summary of the Jurisdictional Officer's/Liaison's determination*. If application should not be reviewed by your Center mark "No."	**X**	
Comments:		
3. If a Request for Designation (RFD) was submitted for the device or combination product with a device constituent part and assigned to your center, identify the RFD # and confirm the following: **a) Is the device or combination product the same (e.g., design, formulation) as that presented in the RFD submission?** **b) Are the indications for use for the device or combination product identified in the 510(k) the same as those identified in the RFD submission?** If you believe the product or the indications presented in the 510(k) have changed from the RFD, or you are unsure, consult with the CDRH Jurisdictional Officer or appropriate CBER Jurisdiction Liaison to determine the appropriate action and inform your division management. *Provide summary of Jurisdictional Officer's/Liaison's determination.* If the answer to either question above is no, mark "No." If there was no RFD, skip this	**N/A**	

question.		
Comments:		
E. 4. Is this device type eligible for a 510(k) submission? If a 510(k) does not appear to be appropriate (e.g., Class III type and PMA required, or Class I or II type and 510(k)-exempt), you should consult with the CDRH 510(k) Program Director or appropriate CBER staff during the acceptance review. If 510(k) is not the appropriate regulatory submission, mark "No."	**X**	
Comments:		
F. 5. Is there a pending PMA for the same device with the same indications for use? If yes, consult division management and the CDRH 510(k) Program Director or appropriate CBER staff to determine the appropriate action.		**X**
Comments:		
G. 5. If clinical studies have been submitted, is the submitter the subject of an Application Integrity Policy (AIP)? If yes, consult with the CDRH Office of Compliance/Division of Bioresearch Monitoring (OC/DBM - BIMO) or CBER Office of Compliance and Biologics Quality/Division of Inspections and Surveillance/Bioresearch Monitoring Branch (OCBQ/DIS/BMB) to determine the appropriate action. Check on web at http://www.fda.gov/ICECI/EnforcementActions/ApplicationIntegrityPolicy/ucm134453.htm.		**X**

H. If the answer to 1 or 2 appears to be "No," then stop review of the 510(k) and issue the "Original Jurisdictional Product" letter.
I. If the answer to 3a or 3b appears to be no, then stop the review and contact the CDRH Jurisdictional Officer or CBER Office of Jurisdiction Liaison.
J. If the answer to 4 is "No," the lead reviewer should consult division management and other Center resources to determine the appropriate action.
K. If the answer to 5 is "Yes," then stop review of the 510(k), contact the CDRH 510(k) Staff and PMA Staff, or appropriate CBER staff.
L. If the answer to 6 is "Yes," then contact CDRH/OC/DBM – BIMO or CBER/OCBQ/DIS/BMB, provide a summary of the discussion with the BIMO Staff, and indicate BIMO's recommendation.

M. Organizational Elements **N.** *Failure to include these items alone generally should not result in an RTA designation*			**O.**
	Yes	**No**	**Comments/ Page**
a. Submission contains Table of Contents	☒	☐	
b. Each section is labeled (e.g., headings or tabs designating Device Description section, Labeling section, etc.)	☒	☐	All
c. All pages of the submission are numbered *All pages should be numbered in such a manner that information can be referenced by page number. This may be done either by consecutively numbering the entire submission, or numbering the pages within a section (e.g., 12-1, 12-2…).*	☒	☐	All
d. Type of 510(k) is identified– traditional, abbreviated, or special *If type of 510(k) is not designated, review as a traditional*	☒	☐	Section II
Comments:			

Elements of a Complete Submission (RTA Items) **P. (21 CFR 807.87 unless otherwise indicated)** **Q.** Submission should be designated RTA if not addressed						
Check "Yes" if item is present, "N/A" if it is not needed and "No" if it is not included but needed.						
	• Any "No" answer will result in a "Refuse to Accept" decision. • Each element on the checklist should be addressed within the submission. The submitter may provide a rationale for omission for any criteria that are deemed not applicable. If a rationale is provided, the criterion is considered present (Yes). An assessment of the rationale will be considered during the review of the submission.			**Yes**	**N/A**	**No**	**Comments/Page**
	Administrative						
		All content used to support the submission is written in English (including translations of test reports, literature articles, etc,)		☒	☐	☐	
		Comments:					
		Submission identifies the following (such as in CDRH Premarket Review Submission Cover Sheet (Form 3514) or 510(k) cover letter):		☒	☐	☐	
			Device trade name or proprietary name	☒	☐	☐	Cover Letter, Section II
			Device common name	☒	☐	☐	Cover Letter, Section II
			Device class and panel or Classification regulation or Statement that device has not been classified with rationale for that conclusion	☒	☐	☐	Cover Letter, Section II
		Comments:					
		Submission contains Indications for Use Statement with Rx and/or OTC designated (see also 21 CFR 801.109) *Submitter should use format appropriate for the reviewing Center/Office (CDRH/ODE, CDRH/OIVD, CBER/OBRR, CBER/OCTGT). If not provided in correct format, request the correct format during substantive review.*		☒	☐	☐	
		Comments:					

Elements of a Complete Submission (RTA Items) **P. (21 CFR 807.87 unless otherwise indicated)** **Q.** Submission should be designated RTA if not addressed						
Check "Yes" if item is present, "N/A" if it is not needed and "No" if it is not included but needed.						
	• Any "No" answer will result in a "Refuse to Accept" decision. • Each element on the checklist should be addressed within the submission. The submitter may provide a rationale for omission for any criteria that are deemed not applicable. If a rationale is provided, the criterion is considered present (Yes). An assessment of the rationale will be considered during the review of the submission.			**Yes**	**N/A**	**No**	**Comments/Page**
		Submission contains 510(k) Summary or 510(k) Statement *Either a) or b) must be answered "Yes" to be considered complete. Identify any missing element(s) as Comments.*		☒	☐	☐	Section VI
			Summary contains all elements per 21 CFR 807.92 *See also 510(k) Summary Checklist*	☒	☐	☐	
			Statement contains all elements per 21 CFR 807.93	☐	☒	☐	
		Comments:					
		Submission contains Truthful and Accuracy Statement per 21 CFR 807.87(k) *See recommended format. Select "Yes" if statement is present and includes the text in the recommended format, and is signed by a responsible person of the firm (not consultant).*		☒	☐	☐	Section VII
		Comments:					
		Submission contains Class III Summary and Certification *See recommended content. Form should be signed by a responsible person of the firm, not a consultant. Select "N/A" only if submission is not a Class III 510(k).*		☐	☒	☐	
		Comments:					
		Submission contains clinical data *Select "N/A" if the submission does not contain clinical data. If "N/A" is selected, parts a and b below are omitted from the checklist.*		☒	☐	☐	Section XXII
			Submission includes Financial Certification (FDA Form 3454) or Disclosure (FDA Form 3455) information for each covered clinical study included in the submission. *Select "N/A" if the submitted clinical data is not a "covered*	☒	☐	☐	Section X

Elements of a Complete Submission (RTA Items) **P. (21 CFR 807.87 unless otherwise indicated)** **Q.** Submission should be designated RTA if not addressed						
Check "Yes" if item is present, "N/A" if it is not needed and "No" if it is not included but needed.						
	• Any "No" answer will result in a "Refuse to Accept" decision. • Each element on the checklist should be addressed within the submission. The submitter may provide a rationale for omission for any criteria that are deemed not applicable. If a rationale is provided, the criterion is considered present (Yes). An assessment of the rationale will be considered during the review of the submission.			**Yes**	**N/A**	**No**	**Comments/Page**
			clinical study" as defined in the Guidance for Industry-Financial Disclosures by Clinical Investigators				
			Submission includes completed Certification of Compliance with requirements of ClinicalTrials.gov Data Bank (FDA Form 3674) (42 U.S.C. 282(j)(5)(B)) for each applicable device clinical trial included in the submission. *Select "N/A" if the submitted clinical data is not an "applicable device clinical trial" as defined in Title VIII of FDAAA, Sec. 801(j)*	☒	☐	☐	Section IX
		Comments:					
		If submission references use of a national or international standard as part of demonstration of substantial equivalence, submission contains complete Standards Data Report for 510(k)s (FDA Form 3654) *There should be a completed form for each referenced national or international standard.* *Select "N/A" only if submission does not reference any standards.*		☒	☐	☐	Att. 1
		Comments:					
		The submission identifies prior submissions for the same device for which FDA provided feedback related to the data or information needed to support substantial equivalence (e.g., submission numbers for Pre- Submission, IDE, prior not substantially equivalent (NSE) determination, prior 510(k) that was deleted or withdrawn) or states that there were no prior submissions for the subject device. *This information may be included in the Cover Letter (i.e., as a statement that there were no prior submissions for the device or a listing of the number(s) of the prior submissions). Alternatively, a list of submission numbers may be found in Section F (prior*		☐	☒	☐	

Elements of a Complete Submission (RTA Items) **P. (21 CFR 807.87 unless otherwise indicated)** **Q.** Submission should be designated RTA if not addressed							
Check "Yes" if item is present, "N/A" if it is not needed and "No" if it is not included but needed.							
	• Any "No" answer will result in a "Refuse to Accept" decision. • Each element on the checklist should be addressed within the submission. The submitter may provide a rationale for omission for any criteria that are deemed not applicable. If a rationale is provided, the criterion is considered present (Yes). An assessment of the rationale will be considered during the review of the submission.				**Yes**	**N/A**	**No**	**Comments/Page**
		related submissions section) of the CDRH Coversheet form (Form 3514) to address this criterion. Please be advised that if this section of the form is left blank, it should not be considered a statement that there were no prior submissions.						
			If there were prior submissions, the submitter has identified where in the current submission any issues related to a determination of substantial equivalence outlined in prior communications are addressed. *To address this criterion, the submission may include a separate section with the prior submission number(s), a copy of the FDA feedback (e.g., letter, meeting minutes), and a statement of how or where in the submission this prior feedback was addressed. Note that the adequacy of how the feedback was addressed should be assessed during the substantive review.* For additional information regarding the Pre-Submission process, please refer to the Draft Guidance "Medical Devices: The Pre-Submission Program and Meetings with FDA Staff." (http://www.fda.gov/MedicalDevices/DeviceRegulationandGuidance/GuidanceDocuments/ucm310375.htm). Once finalized, this guidance will represent the Agency's current thinking on the topic. *Select "N/A" if the submitter states there were no prior submissions in criterion above.*		☐	☒	☐	
		Comments:						
	Device Description							
		a	If there are requirements regarding the device description, such as special controls, in a device-specific regulation that are applicable to the device, the submission includes device description information to establish that the submitter has followed the device-specific requirement.		☐	☒	☐	

Elements of a Complete Submission (RTA Items) **P. (21 CFR 807.87 unless otherwise indicated)** **Q.** Submission should be designated RTA if not addressed							
Check "Yes" if item is present, "N/A" if it is not needed and "No" if it is not included but needed.							
	• Any "No" answer will result in a "Refuse to Accept" decision. • Each element on the checklist should be addressed within the submission. The submitter may provide a rationale for omission for any criteria that are deemed not applicable. If a rationale is provided, the criterion is considered present (Yes). An assessment of the rationale will be considered during the review of the submission.			**Yes**	**N/A**	**No**	**Comments/Page**
			Select "N/A" if there are no applicable requirements in a device-specific regulation. Select "No" if the submission does not include a rationale for any omitted information. Note that the adequacy of how such requirements have been addressed should be assessed during the substantive review.				
		b	If there is a device-specific guidance, other than a special controls guidance document, applicable to the device, the submission includes device description information to establish that the submitter has addressed the recommendations or otherwise has met the applicable statutory or regulatory criteria through an alternative approach. *Select "N/A" if there is no applicable device-specific guidance. Select "No" if the submission does not include a rationale for any omitted information or any alternative approach as outlined above. Note that the adequacy of how recommendations in a device-specific guidance, etc., have been addressed should be assessed during the substantive review.*	☐	☒	☐	
		Comments:					
		Descriptive information is present and consistent within the submission (e.g., the device description section is consistent with the device description in the labeling), including:					
			A description of the principle of operation and mechanism of action for achieving the intended effect.	☒		☐	Section XIII
			A description of proposed conditions of use, such as surgical technique for implants; anatomical location of use; user interface; how the device interacts with other devices; and/or how the device interacts with the patient.	☒		☐	Section XIII

Elements of a Complete Submission (RTA Items) **P. (21 CFR 807.87 unless otherwise indicated)** **Q.** Submission should be designated RTA if not addressed							
Check "Yes" if item is present, "N/A" if it is not needed and "No" if it is not included but needed.							
	• Any "No" answer will result in a "Refuse to Accept" decision. • Each element on the checklist should be addressed within the submission. The submitter may provide a rationale for omission for any criteria that are deemed not applicable. If a rationale is provided, the criterion is considered present (Yes). An assessment of the rationale will be considered during the review of the submission.			**Yes**	**N/A**	**No**	**Comments/Page**
			A list and description of each device for which clearance is requested. *Select "N/A" if there is only one device or model. "Device" may refer to models, part numbers, or various sizes, etc.*	☒	☐	☐	Section XIII
		Comments:					
		Submission contains representative engineering drawing(s), schematics, illustrations and/or figures of the device that are clear, legible, labeled, and include dimensions. *In lieu of drawings, schematics, etc. of each device to be marketed, "representative" drawings, etc. may be provided, where "representative" is intended to mean that the drawings, etc. provided capture the differences in design, size, and other important characteristics of the various models, sizes, or versions of the device(s) to be marketed.* *Select "N/A" if the submitter provided a rationale for why the submission does not contain engineering drawings, schematics, etc. (e.g., device is a reagent and figures are not pertinent to describe the device).*		☒	☐	☐	Section XIII
		Comments:					
		If device is intended to be marketed with multiple components, accessories, and/or as part of a system, *Select "N/A" if the device is not intended to be marketed with multiple components, accessories, and/or as part of a system.*			☒		
			Submission includes a list of all components and accessories to be marketed with the subject device.	☐		☐	
			Submission includes a description (as detailed in item 11.a. and b. and 12 above) of each component or accessory. *Select "N/A" if the component(s)/accessory(ies) has been*	☐	☐	☐	

Elements of a Complete Submission (RTA Items) **P. (21 CFR 807.87 unless otherwise indicated)** **Q.** Submission should be designated RTA if not addressed							
Check "Yes" if item is present, "N/A" if it is not needed and "No" if it is not included but needed.							
	• Any "No" answer will result in a "Refuse to Accept" decision. • Each element on the checklist should be addressed within the submission. The submitter may provide a rationale for omission for any criteria that are deemed not applicable. If a rationale is provided, the criterion is considered present (Yes). An assessment of the rationale will be considered during the review of the submission.			**Yes**	**N/A**	**No**	**Comments/Page**
			previously cleared, or is exempt, and the proposed indications for use are consistent with the cleared indications.				
			A 510(k) number is provided for each component or accessory that received a prior 510(k) clearance. *Select "N/A" if the submission states that the component(s)/ accessory(ies) does not have a prior 510(k) clearance or the component(s)/accessory(ies) is 510(k) exempt.*	☐	☐	☐	
		Comments:					
	Substantial Equivalence Discussion						
		Submitter has identified a predicate(s) device		☒	☐	☐	Section XIV
			Predicate's 510(k) number, trade name, and model number (if applicable) provided. For predicates that are preamendment devices, information is provided to document preamendment status. Information regarding documenting preamendment status is available online (http://www.fda.gov/MedicalDevices/DeviceRegulationandGuidance/ComplicanceActivities/ucm072746.htm).	☒	☐	☐	Section XIV
			The identified predicate(s) is consistent throughout the submission (i.e., the predicate(s) identified in the Substantial Equivalence section is the same as that listed in the 510(k) Summary (if applicable) and that used in comparative performance testing.	☒	☐	☐	Section XIV
		Comments:					
		Submission includes a comparison of the following for the predicate(s) and subject device					
			Indications for use	☒	☐	☐	Section XIV

Elements of a Complete Submission (RTA Items) **P. (21 CFR 807.87 unless otherwise indicated)** **Q.** Submission should be designated RTA if not addressed						
Check "Yes" if item is present, "N/A" if it is not needed and "No" if it is not included but needed.						
	• Any "No" answer will result in a "Refuse to Accept" decision. • Each element on the checklist should be addressed within the submission. The submitter may provide a rationale for omission for any criteria that are deemed not applicable. If a rationale is provided, the criterion is considered present (Yes). An assessment of the rationale will be considered during the review of the submission.			**Yes**	**N/A**	**No**	**Comments/Page**
			Technology, including features, materials, and principles of operation	☒	☐	☐	Section XIV
		Comments:					
		Submission includes an analysis of why any differences between the subject device and predicate(s) do not render the device NSE (e.g., do not constitute a new intended use; and any differences in technological characteristics are accompanied by information that demonstrates the device is as safe and effective as the predicate and do not raise different questions of safety and effectiveness than the predicate), affect safety or effectiveness, or raise different questions of safety and effectiveness (see section 513(i)(1)(A) of the FD&C Act and 21 CFR 807.87(f)) *If there is no difference between the subject and predicate(s) with respect to indications for use or technology, this should be explicitly stated, in which case "N/A" should be selected. Select "No" only if the submission does not include an analysis of differences as described above or a statement that there are no differences. Note that the adequacy of the analysis should be assessed during the substantive review; only the presence of such an analysis is required for acceptance. In addition, note that due to potential differences in manufacturing that may not be known to the submitter, the fact that no differences are identified does not necessarily mean that no performance testing is needed.*		☒	☐	☐	Section XIV
		Comments:					

Elements of a Complete Submission (RTA Items) **P. (21 CFR 807.87 unless otherwise indicated)** **Q.** Submission should be designated RTA if not addressed						
Check "Yes" if item is present, "N/A" if it is not needed and "No" if it is not included but needed.						
	• Any "No" answer will result in a "Refuse to Accept" decision. • Each element on the checklist should be addressed within the submission. The submitter may provide a rationale for omission for any criteria that are deemed not applicable. If a rationale is provided, the criterion is considered present (Yes). An assessment of the rationale will be considered during the review of the submission.			**Yes**	**N/A**	**No**	**Comments/Page**
	Proposed Labeling (see also 21 CFR part 801) *If in vitro diagnostic (IVD) device, criteria 17, 18, and 19 may be omitted. These criteria will be omitted from the checklist if "N/A" is selected. IVD labeling is addressed in section 21 below.*				☐		Section XV
		Submission includes proposed package labels and labeling (e.g., instructions for use, package insert, operator's manual) that include a description of the device, its intended use, and the directions for use		☒		☐	Section XV
			Indications for use are stated in labeling and are identical to Indications for Use form and 510(k) Summary (if 510(k) Summary provided)	☒		☐	Section XV
			Submission includes directions for use that - Include statements of all conditions, purposes or uses for which the device is intended (e.g., hazards, warnings, precautions, contraindications) (21 CFR 801.5) AND - Includes directions for layperson (see 21 CFR 801.5) OR submission states that device qualifies for exemption per 21 CFR 801 Subpart D.	☒		☐	Section XV
		Comments:					
		If indicated for prescription use, labeling includes the prescription use statement (see 21 CFR 801.109(b)(1)) or "Rx only" symbol [See also Alternative to Certain Prescription Device Labeling Requirements] *Select "N/A" if not indicated for prescription use.*		☒	☐	☐	Section XV
		Comments:					
		General labeling provisions					
			Labeling includes name and place of business of the	☒	☐	☐	Section XV

Elements of a Complete Submission (RTA Items) **P. (21 CFR 807.87 unless otherwise indicated)** **Q.** Submission should be designated RTA if not addressed							
Check "Yes" if item is present, "N/A" if it is not needed and "No" if it is not included but needed.							
	• Any "No" answer will result in a "Refuse to Accept" decision. • Each element on the checklist should be addressed within the submission. The submitter may provide a rationale for omission for any criteria that are deemed not applicable. If a rationale is provided, the criterion is considered present (Yes). An assessment of the rationale will be considered during the review of the submission.			**Yes**	**N/A**	**No**	**Comments/Page**
			manufacturer, packer, or distributor (21 CFR 801.1)				
			Labeling includes device common or usual name (21 CFR 801.61) *Select "N/A" if device is for prescription use only.*	☒	☐	☐	Section XV
		Comments:					
			If there are requirements regarding labeling, such as special controls, in a device-specific regulation that are applicable to the device, the submission includes labeling to establish that the submitter has followed the device-specific requirement. *Select "N/A" if there are no applicable requirements in a device-specific regulation. Select "No" if the submission does not include a rationale for any omitted information. Note that the adequacy of how such requirements have been addressed should be assessed during the substantive review.*	☐	☒	☐	
			If there is a device-specific guidance, other than a special controls guidance document, applicable to the device, the submission includes labeling to establish that the submitter has addressed the recommendations or otherwise has met the applicable statutory or regulatory criteria through an alternative approach. *Select "N/A" if there is no applicable device-specific guidance. Select "No" if the submission does not include a rationale for any omitted information or any alternative approach as outlined above. Note that the adequacy of how recommendations in a device-specific guidance have been addressed should be assessed during the substantive review.*	☐	☒	☐	
			If there is a special controls document applicable to the	☐	☐	☐	

Elements of a Complete Submission (RTA Items) **P. (21 CFR 807.87 unless otherwise indicated)** **Q.** Submission should be designated RTA if not addressed						
Check "Yes" if item is present, "N/A" if it is not needed and "No" if it is not included but needed.						
	• Any "No" answer will result in a "Refuse to Accept" decision. • Each element on the checklist should be addressed within the submission. The submitter may provide a rationale for omission for any criteria that are deemed not applicable. If a rationale is provided, the criterion is considered present (Yes). An assessment of the rationale will be considered during the review of the submission.			**Yes**	**N/A**	**No**	**Comments/Page**
			device, the submission includes labeling to establish that the submitter has complied with the particular mitigation measures set forth in the special controls document or uses alternative mitigation measures but provides a rationale to demonstrate that those alternative measures identified by the firm will provide at least an equivalent assurance of safety and effectiveness. *Select "N/A" if there is no applicable special controls document. Select "No" if the submission does not include a rationale for any omitted information or any alternative approach as outlined above. Note that the adequacy of how mitigation measures in a special controls document have been addressed should be assessed during the substantive review.*				
		Comments:					
		If the device is an in vitro diagnostic device, provided labeling includes all applicable information required per 21 CFR 809.10. *Select "N/A" if not an in vitro diagnostic device.*		☐	☒	☐	
	Sterilization *If in vitro diagnostic (IVD) device and sterilization is not applicable, select "N/A." The criteria in this section will be omitted from the checklist if "N/A" is selected.*						
	Submission states that the device and/or accessories are: (one of the below must be checked) ☐ provided sterile ☐ provided non-sterile but sterilized by the end user ☒ non-sterile when used This information will determine whether and what type of additional information may					☐	

Elements of a Complete Submission (RTA Items) **P. (21 CFR 807.87 unless otherwise indicated)** **Q.** Submission should be designated RTA if not addressed							
Check "Yes" if item is present, "N/A" if it is not needed and "No" if it is not included but needed.							
	• Any "No" answer will result in a "Refuse to Accept" decision. • Each element on the checklist should be addressed within the submission. The submitter may provide a rationale for omission for any criteria that are deemed not applicable. If a rationale is provided, the criterion is considered present (Yes). An assessment of the rationale will be considered during the review of the submission.				**Yes**	**N/A**	**No**	**Comments/Page**
	be necessary for a substantial equivalence determination. *If "non-sterile when used" is selected, the sterility-related criteria below are omitted from the checklist.* *If information regarding the sterility status of the device is not provided, select "No."*							
		Comments:						
		Assessment of the need for sterilization information						
			Identification of device, and/or accessories, and/or components that are provided sterile.		☐	☒	☐	
			Identification of device, and/or accessories, and/or components that are end user sterilized.		☐	☒	☐	
			Identification of device, and/or accessories, and/or components that are reusable and cleaning/disinfection instructions are provided.		☐	☒	☐	
		Comments:						
		If the device, and/or accessory, and/or a component is provided sterile: *Select "N/A" if no part of the device, accessories, or components is provided sterile, otherwise complete a-e below.*				☒		
			Sterilization method is stated for each component (including parameters such as dry time for steam sterilization, radiation dose, etc.)		☐	☐	☐	
			A description of method to validate the sterilization parameters (e.g., half-cycle method and full citation of FDA-recognized standard, including date) is provided for each proposed sterilization method. *Note, the sterilization validation report is not required.*		☐	☐	☐	
			For devices sterilized using chemical sterilants such as		☐	☐	☐	

Elements of a Complete Submission (RTA Items) **P. (21 CFR 807.87 unless otherwise indicated)** **Q.** Submission should be designated RTA if not addressed							
Check "Yes" if item is present, "N/A" if it is not needed and "No" if it is not included but needed.							
	• Any "No" answer will result in a "Refuse to Accept" decision. • Each element on the checklist should be addressed within the submission. The submitter may provide a rationale for omission for any criteria that are deemed not applicable. If a rationale is provided, the criterion is considered present (Yes). An assessment of the rationale will be considered during the review of the submission.			**Yes**	**N/A**	**No**	**Comments/Page**
			ethylene oxide (EO) and hydrogen peroxide, submission states maximum levels of sterilant residuals remaining onthe device and sterilant residual limits. *Select "N/A" if not sterilized using chemical sterilants.*				
			Submission includes description of packaging and packaging contents (e.g., if multiple devices are included within the same package, Tyvek packaging, etc.)	☐	☐	☐	
			Sterility Assurance Level (SAL) stated	☐	☐	☐	
		Comments:					
		If the device, and/or accessory, and/or a component is end user sterilized: *Select "N/A" if no part of the device, accessories, or components are end user sterilized, otherwise complete a-d below.*			☒		
			Sterilization method is stated for each component (including parameters such as dry time for steam sterilization, radiation dose, etc.)	☐	☐	☐	
		b	A description of method to validate the sterilization parameters (e.g., half-cycle method and full citation of FDA-recognized standard, including date) is provided for each proposed sterilization method. *Note, the sterilization validation is not required.*	☐	☐	☐	
			Submission includes description of packaging and packaging contents (e.g., if multiple devices are included within the same package, Tyvek packaging, etc.)	☐	☐	☐	
			Submission includes sterilization instructions for end user	☐	☐	☐	
			Comments:				
		a	If there are requirements regarding sterility, such as special	☐	☒	☐	

Elements of a Complete Submission (RTA Items) **P. (21 CFR 807.87 unless otherwise indicated)** **Q.** Submission should be designated RTA if not addressed							
Check "Yes" if item is present, "N/A" if it is not needed and "No" if it is not included but needed.							
	• Any "No" answer will result in a "Refuse to Accept" decision. • Each element on the checklist should be addressed within the submission. The submitter may provide a rationale for omission for any criteria that are deemed not applicable. If a rationale is provided, the criterion is considered present (Yes). An assessment of the rationale will be considered during the review of the submission.			**Yes**	**N/A**	**No**	**Comments/Page**
			controls, in a device-specific regulation that are applicable to the device, the submission includes sterility information to establish that the submitter has followed the device-specific requirement. *Select "N/A" if there are no applicable requirements in a device-specific regulation. Select "No" if the submission does not include a rationale for any omitted information. Note that the adequacy of how such requirements have been addressed should be assessed during the substantive review.*				
		b	If there is a device-specific guidance, other than a special controls guidance document, applicable to the device, the submission includes sterility information to establish that the submitter has addressed the recommendations or otherwise has met the applicable statutory or regulatory criteria through an alternative approach. *Select "N/A" if there is no applicable device-specific guidance. Select "No" if the submission does not include a rationale for any omitted information or any alternative approach as outlined above. Note that the adequacy of how recommendations in a device-specific guidance have been addressed should be assessed during the substantive review.*	☐	☒	☐	
		c	If there is a special controls document applicable to the device, the submission includes sterility information to establish that the submitter has complied with the particular mitigation measures set forth in the special controls document or uses alternative mitigation measures but provides a rationale to demonstrate that those alternative measures identified by the firm will provide at least an equivalent assurance of safety and effectiveness. *Select "N/A" if there is no applicable special controls*	☐	☒	☐	

Elements of a Complete Submission (RTA Items) **P. (21 CFR 807.87 unless otherwise indicated)** **Q.** Submission should be designated RTA if not addressed						
Check "Yes" if item is present, "N/A" if it is not needed and "No" if it is not included but needed.						
	• Any "No" answer will result in a "Refuse to Accept" decision. • Each element on the checklist should be addressed within the submission. The submitter may provide a rationale for omission for any criteria that are deemed not applicable. If a rationale is provided, the criterion is considered present (Yes). An assessment of the rationale will be considered during the review of the submission.			**Yes**	**N/A**	**No**	**Comments/Page**
			document. Select "No" if the submission does not include a rationale for any omitted information or any alternative approach as outlined above. Note that the adequacy of how mitigation measures in a special controls document have been addressed should be assessed during the substantive review.				
		Comments:					
	Shelf Life						
		Proposed shelf life/ expiration date stated *Select "N/A" if the device is not provided sterile and the submitter states that storage conditions could not affect device safety or effectiveness.*		☒	☐	☐	Section XVI
		Comments:					
		For sterile device, submission includes summary of methods used to establish that device sterility will remain substantially equivalent to that of the predicate through the proposed shelf life, or a rationale for why testing to establish shelf life is not applicable. *Select "N/A" if the device is not provided sterile.*		☐	☒	☐	
		Comments:					
		Submission includes summary of methods used to establish that device performance is not adversely affected by aging and therefore device performance will remain substantially equivalent to that of the predicate, or includes a rationale for why the storage conditions are not expected to affect device safety or effectiveness.		☒	☐	☐	Section XVI
		Comments:					

Elements of a Complete Submission (RTA Items) **P. (21 CFR 807.87 unless otherwise indicated)** **Q.** Submission should be designated RTA if not addressed						
Check "Yes" if item is present, "N/A" if it is not needed and "No" if it is not included but needed.						
	• Any "No" answer will result in a "Refuse to Accept" decision. • Each element on the checklist should be addressed within the submission. The submitter may provide a rationale for omission for any criteria that are deemed not applicable. If a rationale is provided, the criterion is considered present (Yes). An assessment of the rationale will be considered during the review of the submission.		**Yes**	**N/A**	**No**	**Comments/Page**
	Biocompatibility *If in vitro diagnostic (IVD) device, select "N/A." The criteria in this section will be omitted from the checklist if "N/A" is selected.*			☐		
	Submission states that there: (*one of the below must be checked*) ☒ are ☐ are not direct or indirect (e.g., through fluid infusion) patient-contacting components. This information will determine whether and what type of additional information may be necessary for a substantial equivalence determination. *If "are not" is selected, the biocompatibility-related criteria below are omitted from the checklist. If information regarding whether the device is patient-contacting is not provided, select "No."*				☐	
	Comments:					
		Submission includes list of patient-contacting device components and associated materials of construction, including identification of color additives, if present	X	☐	☐	
		Comments:				
		Submission identifies contact classification (e.g., surface-contacting, less than 24 hour duration)	X	☐	☐	
		Comments:				
		Biocompatibility assessment of patient-contacting components Submission includes: Test protocol (including identification and description of test article),methods, pass/fail criteria, and results provided for each	☒	☐	☐	Section XVII

Elements of a Complete Submission (RTA Items) **P. (21 CFR 807.87 unless otherwise indicated)** **Q.** Submission should be designated RTA if not addressed						
Check "Yes" if item is present, "N/A" if it is not needed and "No" if it is not included but needed.						
	• Any "No" answer will result in a "Refuse to Accept" decision. • Each element on the checklist should be addressed within the submission. The submitter may provide a rationale for omission for any criteria that are deemed not applicable. If a rationale is provided, the criterion is considered present (Yes). An assessment of the rationale will be considered during the review of the submission.		**Yes**	**N/A**	**No**	**Comments/Page**
		completed test, OR a statement that biocompatibility testing is not needed with a rationale(e.g., materials and manufacturing/processing are identical to the predicate).				
		Comments:				
	Software					
	Submission states that the device: (*one of the below must be checked*) ☒ does ☐ does not contain software/firmware. This information will determine whether and what type of additional information may be necessary for a substantial equivalence determination. *If "does not" is selected, the software-related criterion is omitted from the checklist. If information regarding whether the device contains software is not provided, select "No."*				☐	
	Comments:					
		Submission includes a statement of software level of concern and rationale for the software level of concern	☒		☐	Section XVIII
		Comments:				
		All applicable software documentation provided based on level of concern identified by the submitter, as described in Guidance for the Content of Premarket Submissions for Software Contained in Medical Devices, or the submitter includes information to establish that the submitter has otherwise met the applicable statutory or regulatory criteria through an alternative approach (i.e., the submitter has identified an alternate approach with a	☒		☐	Section XVIII

Elements of a Complete Submission (RTA Items) **P. (21 CFR 807.87 unless otherwise indicated)** **Q.** Submission should be designated RTA if not addressed						
Check "Yes" if item is present, "N/A" if it is not needed and "No" if it is not included but needed.						
	• Any "No" answer will result in a "Refuse to Accept" decision. • Each element on the checklist should be addressed within the submission. The submitter may provide a rationale for omission for any criteria that are deemed not applicable. If a rationale is provided, the criterion is considered present (Yes). An assessment of the rationale will be considered during the review of the submission.			**Yes**	**N/A**	**No**	**Comments/Page**
		rationale).				
		Comments:				
	EMC and Electrical Safety					Section XIX
	Submission states that the device: (*one of the below must be checked*) ☒ does ☐ does not require EMC and Electrical Safety evaluation. This information will determine whether and what type of additional information may be necessary for a substantial equivalence determination. *If "does not" is selected, the EMC-related and Electrical Safety-related criteria below are omitted from the checklist. If information regarding whether the device requires EMC and Electrical Safety evaluation is not provided, select "No."*					☐	Section XIX
		Comments:				
		Submission includes evaluation of electrical safety (e.g., per IEC 60601-1, or equivalent FDA-recognized standard, and if applicable, the device-specific standard), OR submission includes electrical safety evaluation using methods or standards that are not FDA-recognized and submission includes information to establish that the submitter has otherwise met the applicable statutory or regulatory criteria through this alternative approach (i.e., the submitter has identified alternate methods or standards with a rationale).		☒		☐	Section XIX
		Comments:				
		Submission includes evaluation of electromagnetic compatibility (e.g., per IEC 60601-1-2 or equivalent FDA-recognized standard		☒		☐	Section XIX

Elements of a Complete Submission (RTA Items) **P. (21 CFR 807.87 unless otherwise indicated)** **Q.** Submission should be designated RTA if not addressed						
Check "Yes" if item is present, "N/A" if it is not needed and "No" if it is not included but needed.						
	• Any "No" answer will result in a "Refuse to Accept" decision. • Each element on the checklist should be addressed within the submission. The submitter may provide a rationale for omission for any criteria that are deemed not applicable. If a rationale is provided, the criterion is considered present (Yes). An assessment of the rationale will be considered during the review of the submission.		**Yes**	**N/A**	**No**	**Comments/Page**
		and if applicable, the device-specific standard) OR submission includes electromagnetic compatibility evaluation using methods or standards that are not FDA-recognized and submission includes information to establish that the submitter has otherwise met the applicable statutory and regulatory criteria through this alternative approach (i.e., the submitter has identified alternate methods or standards with a rationale).				
		Comments:				

Elements of a Complete Submission (RTA Items) **P. (21 CFR 807.87 unless otherwise indicated)** **Q.** Submission should be designated RTA if not addressed						
Check "Yes" if item is present, "N/A" if it is not needed and "No" if it is not included but needed.						
	• Any "No" answer will result in a "Refuse to Accept" decision. • Each element on the checklist should be addressed within the submission. The submitter may provide a rationale for omission for any criteria that are deemed not applicable. If a rationale is provided, the criterion is considered present (Yes). An assessment of the rationale will be considered during the review of the submission.			**Yes**	**N/A**	**No**	**Comments/Page**
	Performance Data – General *If in vitro diagnostic (IVD) device, select "N/A." The criteria in this section will be omitted from the checklist if "N/A" is selected. Performance data criteria relating to IVD devices will be addressed in Section K.*				☐		Sections XX-XII
	Comments:						
		Full test report is provided for each completed test. A full test report includes: objective of the test, description of the test methods and procedures, study endpoint(s), pre- defined pass/fail criteria, results summary, conclusions, and an explanation of how the data generated from the test supports a finding of substantial equivalence. *Full test reports provided for all completed tests/evaluations (e.g., bench evaluations, comparative performance tests, etc.). Select "N/A" if the submission does not include performance data.*		☒	☐	☐	Sections XX-XII
		Comments:					
			If there are requirements regarding performance data, such as special controls, in a device-specific regulation that are applicable to the device, the submission includes performance data to establish that the submitter has followed the device-specific requirement. *Select "N/A" if there are no applicable requirements in a device-specific regulation. Select "No" if the submission does not include a rationale for any omitted information. Note that the adequacy of how such requirements have been addressed should be assessed during the substantive review.*	☐	☒	☐	
			If there is a device-specific guidance, other than a special controls guidance document, applicable to the device, the submission includes performance data to establish that the	☐	☒	☐	

Elements of a Complete Submission (RTA Items) **P. (21 CFR 807.87 unless otherwise indicated)** **Q.** Submission should be designated RTA if not addressed							
Check "Yes" if item is present, "N/A" if it is not needed and "No" if it is not included but needed.							
	• Any "No" answer will result in a "Refuse to Accept" decision. • Each element on the checklist should be addressed within the submission. The submitter may provide a rationale for omission for any criteria that are deemed not applicable. If a rationale is provided, the criterion is considered present (Yes). An assessment of the rationale will be considered during the review of the submission.			**Yes**	**N/A**	**No**	**Comments/Page**
			submitter has addressed the recommendations or otherwise has met the applicable statutory or regulatory criteria through an alternative approach. *Select "N/A" if there is no applicable device-specific guidance. Select "No" if the submission does not include a rationale for any omitted information or any alternative approach as outlined above. Note that the adequacy of how recommendations in a device-specific guidance have been addressed should be assessed during the substantive review.*				
			If there is a special controls document applicable to the device, the submission includes performance data to establish that the submitter has complied with the particular mitigation measures set forth in the special controls document or uses alternative mitigation measures but provides a rationale to demonstrate that those alternative measures identified by the firm will provide at least an equivalent assurance of safety and effectiveness. *Select "N/A" if there is no applicable special controls document. Select "No" if the submission does not include a rationale for any omitted information or any alternative approach as outlined above. Note that the adequacy of how mitigation measures in a special controls document have been addressed should be assessed during the substantive review.*	☐	☒	☐	
			Comments:				
			If literature is referenced in the submission, submission includes: *Select "N/A" if the submission does not reference literature. Note that the applicability of the referenced article to support a substantial equivalence finding should be assessed during the substantive review; only the presence of a discussion is required to*	☐	☒	☐	

Elements of a Complete Submission (RTA Items) **P. (21 CFR 807.87 unless otherwise indicated)** **Q.** Submission should be designated RTA if not addressed							
Check "Yes" if item is present, "N/A" if it is not needed and "No" if it is not included but needed.							
	• Any "No" answer will result in a "Refuse to Accept" decision. • Each element on the checklist should be addressed within the submission. The submitter may provide a rationale for omission for any criteria that are deemed not applicable. If a rationale is provided, the criterion is considered present (Yes). An assessment of the rationale will be considered during the review of the submission.			**Yes**	**N/A**	**No**	**Comments/Page**
		support acceptance.					
		a	Legible reprints or a summary of each article	☐	☐	☐	
		b	Discussion of how each article is applicable to support the substantial equivalence of the subject device to the predicate.	☐	☐	☐	
		Comments:					
		For each completed nonclinical (i.e., animal) study conducted, *Select "N/A" if no animal study was conducted. Note that this section does not address biocompatibility evaluations, which are assessed in Section G of the checklist,*		☐	☒	☐	
			Submission includes a study protocol which includes all elements as outlined in 21 CFR 58.120	☐	☒	☐	
			Submission includes final study report which includes all elements outlined in 21 CFR 58.185	☐	☒	☐	
			Submission contains a statement that the study was conducted in compliance with applicable requirements in the GLP regulation (21 CFR Part 58), or, if the study was not conducted in compliance with the GLP regulation, the submission explains why the noncompliance would not impact the validity of the study data provided to support a substantial equivalence determination.	☐	☒	☐	
			Comments:				
	Performance Characteristics – In Vitro Diagnostic Devices Only (see also 21 CFR 809.10(b)(12))				☒		
	Submission indicates that device: (*one of the below must be checked*) ☐ is						

Elements of a Complete Submission (RTA Items) **P. (21 CFR 807.87 unless otherwise indicated)** **Q.** Submission should be designated RTA if not addressed							
Check "Yes" if item is present, "N/A" if it is not needed and "No" if it is not included but needed.							
	• Any "No" answer will result in a "Refuse to Accept" decision. • Each element on the checklist should be addressed within the submission. The submitter may provide a rationale for omission for any criteria that are deemed not applicable. If a rationale is provided, the criterion is considered present (Yes). An assessment of the rationale will be considered during the review of the submission.				**Yes**	**N/A**	**No**	**Comments/Page**
	☒ is not an in vitro diagnostic device (IVD). *If "is not" is selected, the performance data-related criteria below are omitted from the checklist.*							
		Comments:						
		Submission includes the following studies, as appropriate for the device type, including associated protocol descriptions, study results and line data:						
			Precision/reproducibility		☐	☐	☐	
			Accuracy (includes as appropriate linearity; calibrator or assay traceability; calibrator and/or assay stability protocol and acceptance criteria; assay cut-off; method comparison or comparison to clinical outcome; matrix comparison; and clinical reference range or cutoff.		☐	☐	☐	
			Sensitivity (detection limits, LoB, LoD, LoQ where relevant for the device type).		☐	☐	☐	
			Analytical specificity		☐	☐	☐	
		Comments:						
			If there are requirements regarding performance data, such as special controls, in a device-specific regulation that are applicable to the device, the submission includes performance data to establish that the submitter has followed the device-specific requirement. *Select "N/A" if there are no applicable requirements in a device-specific regulation. Select "No" if the submission does not include a rationale for any omitted information. Note that the adequacy of how such requirements have been addressed should be assessed during the substantive review.*		☐	☐	☐	
			If there is a device-specific guidance, other than a special controls guidance document, applicable to the device, the submission includes performance data to establish that		☐	☐	☐	

Elements of a Complete Submission (RTA Items) **P. (21 CFR 807.87 unless otherwise indicated)** **Q.** Submission should be designated RTA if not addressed							
Check "Yes" if item is present, "N/A" if it is not needed and "No" if it is not included but needed.							
	• Any "No" answer will result in a "Refuse to Accept" decision. • Each element on the checklist should be addressed within the submission. The submitter may provide a rationale for omission for any criteria that are deemed not applicable. If a rationale is provided, the criterion is considered present (Yes). An assessment of the rationale will be considered during the review of the submission.			**Yes**	**N/A**	**No**	**Comments/Page**
			the submitter has addressed the recommendations or otherwise has met the applicable statutory or regulatory criteria through an alternative approach. *Select "N/A" if there is no applicable device-specific guidance. Select "No" if the submission does not include a rationale for any omitted information or any alternative approach as outlined above. Note that the adequacy of how recommendations in a device-specific guidance have been addressed should be assessed during the substantive review.*				
			If there is a special controls document applicable to the device, the submission includes performance data to establish that the submitter has complied with the particular mitigation measures set forth in the special controls document or uses alternative mitigation measures but provides a rationale to demonstrate that those alternative measures identified by the firm will provide at least an equivalent assurance of safety and effectiveness. *Select "N/A" if there is no applicable special controls document. Select "No" if the submission does not include a rationale for any omitted information or any alternative approach as outlined above. Note that the adequacy of how mitigation measures in a special controls document have been addressed should be assessed during the substantive review.*	☐	☐	☐	
		Comments:					

Decision: **Accept _____ Refuse to Accept _____**

If Accept, notify applicant; if Refuse to Accept, notify applicant in writing and include a copy of this checklist.

Reviewer Signature: _____ Date: _____

Supervisory Signature: _____ Date: _____

Records Processed under FOIA request 2016-2167; Released by CDRH on 09/06/2016

Decision: **Accept _____ Refuse to Accept _____**

If Accept, notify applicant; if Refuse to Accept, notify applicant in writing and include a copy of this checklist.

Reviewer Signature: _____ Date: _____

Supervisory Signature: _____ Date: _____

Records Processed under FOIA request 2016-2167; Released by CDRH on 09/06/2016

V. INDICATIONS FOR USE STATEMENT

The Company's Indications for Use Statement for the Pentacam® AXL is provided on the following page.

Records Processed under FOIA request 2016-2167; Released by CDRH on 09/06/2016

DEPARTMENT OF HEALTH AND HUMAN SERVICES
Food and Drug Administration

Indications for Use

Form Approved: OMB No. 0910-0120
Expiration Date: January 31, 2017
See PRA Statement on last page

510(k) Number *(if known)*

Device Name

Pentacam® AXL

Indications for Use *(Describe)*

The Pentacam® is designed to take photos of the anterior segment of the eye which includes the cornea, pupil, anterior chamber and lens of the eye. To evaluate:

- corneal shape,
- analyze condition of the lens (opaque crystalline lens),
- analyze the anterior chamber angle,
- analyze anterior chamber depth,
- analyze the volume of the anterior chamber,
- analyze anterior or posterior cortical opacity,
- analyze the location of cataracts (nuclear, sub capsular and or cortical), using cross slit imaging with densitometry,
- corneal thickness,
- axial length,
- white-to-white distance.

The Pentacam® AXL also performs calculations to assist physicians in determining the power of the intraocular lens for implantation.

Type of Use *(Select one or both, as applicable)*

☒ Prescription Use (Part 21 CFR 801 Subpart D) ☐ Over-The-Counter Use (21 CFR 801 Subpart C)

CONTINUE ON A SEPARATE PAGE IF NEEDED.

This section applies only to requirements of the Paperwork Reduction Act of 1995.

DO NOT SEND YOUR COMPLETED FORM TO THE PRA STAFF EMAIL ADDRESS BELOW.

The burden time for this collection of information is estimated to average 79 hours per response, including the time to review instructions, search existing data sources, gather and maintain the data needed and complete and review the collection of information. Send comments regarding this burden estimate or any other aspect of this information collection, including suggestions for reducing this burden, to:

Department of Health and Human Services
Food and Drug Administration
Office of Chief Information Officer
Paperwork Reduction Act (PRA) Staff
PRAStaff@fda.hhs.gov

"An agency may not conduct or sponsor, and a person is not required to respond to, a collection of information unless it displays a currently valid OMB number."

Questions? Contact FDA/CDRH/OCE/DID at CDRH-FOISTATUS@fda.hhs.gov or 301-796-8118

Records Processed under FOIA request 2016-2167; Released by CDRH on 09/06/2016

VI. 510(K) SUMMARY

The Company's 510(k) Summary is provided on the following pages.

Questions? Contact FDA/CDRH/OCE/DID at CDRH-FOISTATUS@fda.hhs.gov or 301-796-8118

Records Processed under FOIA request 2016-2167; Released by CDRH on 09/06/2016

510(k) SUMMARY

OCULUS Pentacam® AXL

General Information

Applicant:

OCULUS Optikgeräte GmbH
Müncholzhäuserstr. 29
35582 Wetzlar
Germany
Phone: +49(0)641 2005-0
Fax +49(0)641 2005-255

Contact Person:

Mr. Eckhard Loh
Head of Quality and Regulatory Affairs
OCULUS Optikgeräte GmbH
Müncholzhäuserstr. 29
35582 Wetzlar
Germany
Phone: +49(0)641 2005-0
Fax +49(0)641 2005-255

Summary Prepared: August 14, 2015

Device Information

Classification Name:	Device, analysis, anterior segment (AC-powered slitlamp biomicroscope)
Trade/Propriety Name:	Pentacam® AXL
Regulation Number:	21 C.F.R. § 886.1850
Device class:	II
Product Code:	MXK, HJO

Predicate Devices

Carl Zeiss Meditec AG, IOLMASTER 500 (K122418)
Oculus Optikgeräte GmbH, Pentacam®/Pentacam® HR (K030719)

Intended Use / Indications for Use

The Pentacam® AXL is designed to take photos of the anterior segment of the eye which includes the cornea, pupil, anterior chamber and lens of the eye. To evaluate:

- corneal shape,
- analyze condition of the lens (opaque crystalline lens),
- analyze the anterior chamber angle,
- analyze anterior chamber depth,
- analyze the volume of the anterior chamber,
- analyze anterior or posterior cortical opacity,
- analyze the location of cataracts (nuclear, sub capsular and or cortical), using cross slit imaging with densitometry,
- corneal thickness,
- axial length (by optical biometry),
- white-to-white distance.

The Pentacam® AXL also performs calculations to assist physicians in determining the power of the intraocular lens for implantation.

Product Description/Technological Characteristics

The Pentacam AXL is designed to take photos of the anterior segment of the eye to measures eye components such as Axial length, Corneal thickness, Anterior chamber depth, Corneal curvature, Corneal cylinder, Corneal cylinder axis and White-to-white-distance. The measured parameters can be used by physicians to calculate the power of the intraocular lens (IOL) implanted during a cataract surgery.

While rotating around the eye, the Pentacam® AXL captures Scheimpflug images of the anterior eye segment through varying axes. The Scheimpflug images created during an examination are transmitted to the connected PC.
Scheimpflug images can be captured within maximum two seconds. Up to 138,000 genuine height values are measured and analyzed from the Scheimpflug images.

The Scheimpflug images are the basis for the height data which are used to calculate a mathematical 3D model of the anterior eye segment.
The mathematical 3D model, corrected for eye movements, provides the basis for all subsequent analysis.

The axial length of the eye is measured by interferometry.

Performance Data

EMC and electrical safety of the subject devices were evaluated using the following consensus standards**:** IEC 60601-1; IEC 60601-1-2.

Testing performed in accordance with ISO 15004-1, ISO 15004-2, ISO 2265 and IEC 60825-1 demonstrated compliance with these standards.

Summary of clinical results

(b)(4)

[redacted]

(b)(4)

[redacted]

(b)(4)

[redacted]

(b)(4)

[redacted]

(b)(4)

[redacted]

(b)(4)

[redacted]

(b)(4)

[redacted]

(b)(4)

[redacted]

Substantial Equivalence

The Pentacam® AXL is as safe and effective as the IOLMASTER 500 and the Pentacam®. The Pentacam® AXL has the same intended use and similar indications, technological characteristics, and principles of operation as its predicate devices. The minor technological differences between the Pentacam® AXL and its predicate devices raise no new issues of safety or effectiveness as the device merely combines functionalities that were already cleared in the two predicate devices. Performance data demonstrates that the Pentacam® AXL is as safe and effective as IOLMASTER 500 ad the Pentacam. Thus, the Pentacam® AXL is substantially equivalent.

Records Processed under FOIA request 2016-2167; Released by CDRH on 09/06/2016

VII. TRUTHFUL AND ACCURATE STATEMENT

The Company's signed Truthful and Accurate statement is included on the following page.

Questions? Contact FDA/CDRH/OCE/DID at CDRH-FOISTATUS@fda.hhs.gov or 301-796-8118

Records Processed under FOIA request 2016-2167; Released by CDRH on 09/06/2016

PREMARKET NOTIFICATION

TRUTHFUL AND ACCURATE STATEMENT

(As Required by 21 C.F.R. § 807.87(k))

I certify that, in my capacity as Head of Quality and Regulatory Affairs Manager of Oculus Optikgeraete GmbH, I believe to the best of my knowledge, that all data and information submitted in this premarket notification for the Pentacam® AXL are truthful and accurate and that no material fact has been omitted.

(b) (6)

[redacted]

(Signature)

Eckhard Loh, Head of Quality and Regulatory Affairs Manager

08/13/2015

(Date)

(Premarket Notification [510(k)] Number)

Questions? Contact FDA/CDRH/OCE/DID at CDRH-FOISTATUS@fda.hhs.gov or 301-796-8118

Records Processed under FOIA request 2016-2167; Released by CDRH on 09/06/2016

VIII. CLASS III SUMMARY AND CERTIFICATION

Not applicable – The Pentacam® AXL is not a class III device.

Questions? Contact FDA/CDRH/OCE/DID at CDRH-FOISTATUS@fda.hhs.gov or 301-796-8118

Records Processed under FOIA request 2016-2167; Released by CDRH on 09/06/2016

IX. CERTIFICATION OF COMPLIANCE WITH CLINICAL TRIALS.GOV DATA BANK

The company certification form is on the next page. The company has determined that the requirements of 42 U.S.C. §282(j), Section 402(j) of the Public Health Service Act do not apply to any of the clinical studies referenced in the submission, as they were retrospective studies.

Questions? Contact FDA/CDRH/OCE/DID at CDRH-FOISTATUS@fda.hhs.gov or 301-796-8118

Records Processed under FOIA request 2016-2167; Released by CDRH on 09/06/2016

Form Approved: OMB No. 0910-0616. Expiration Date: 2/28/2018. See PRA Statement on page 2.

DEPARTMENT OF HEALTH AND HUMAN SERVICES
Food and Drug Administration

Certification of Compliance

Under 42 U.S.C. § 282(j)(5)(B), with Requirements of ClinicalTrials.gov Data Bank (42 U.S.C. § 282(j))

(For submission with an application/submission, including amendments, supplements, and resubmissions, under §§ 505, 515, 520(m), or 510(k) of the Federal Food, Drug, and Cosmetic Act or § 351 of the Public Health Service Act.)

SPONSOR / APPLICANT / SUBMITTER INFORMATION

1. Name of Sponsor/Applicant/Submitter
OCULUS OPTIKGERAETE GmbH

2. Date of the Application/Submission Which This Certification Accompanies

3. Address
Address 1 *(Street address, P.O. box, company name c/o)*
Muenchholzhaeuser Str. 29
Address 2 *(Apartment, suite, unit, building, floor, etc.)*
City: Wetzlar
State/Province/Region:
Country: Germany
ZIP or Postal Code: 35582

4. Telephone and Fax Numbers *(Include country code if applicable and area code)*
(Tel): +49 641 2005-0
(Fax): +49 641 2005-255

PRODUCT INFORMATION

5. **For Drugs/Biologics:** Include Any/All Available Established, Proprietary and/or Chemical/Biochemical/Blood/Cellular/Gene Therapy Product Name(s).
For Devices: Include Any/All Common or Usual Name(s), Classification, Trade or Proprietary or Model Name(s) and/or Model Number(s)

Pentacam AXL

Continuation Page for #5

APPLICATION / SUBMISSION INFORMATION

6. Type of Application/Submission Which This Certification Accompanies

☐ IND ☐ NDA ☐ ANDA ☐ BLA ☐ PMA ☐ HDE ☒ 510(k) ☐ PDP ☐ Other

7. Include IND/NDA/ANDA/BLA/PMA/HDE/510(k)/PDP/ Other Number *(If number previously assigned)*

If BLA was selected in item 6, provide Supplement Number

8. Serial Number Assigned to Application/Submission Which This Certification Accompanies

CERTIFICATION STATEMENT / INFORMATION

9. Check only one of the following boxes *(See instructions for additional information and explanation)*

☐ A. I certify that the requirements of 42 U.S.C. § 282(j), Section 402(j) of the Public Health Service Act do not apply because the application/submission which this certification accompanies does not reference any clinical trial.

☒ B. I certify that the requirements of 42 U.S.C. § 282(j), Section 402(j) of the Public Health Service Act do not apply to any clinical trial referenced in the application/submission which this certification accompanies.

☐ C. I certify that the requirements of 42 U.S.C. § 282(j), Section 402(j) of the Public Health Service Act apply to one or more of the clinical trials referenced in the application/submission which this certification accompanies and that those requirements have been met.

Certification Statement / Information section continued on page 2

Questions? Contact FDA/CDRH/OCE/DID at CDRH-FOISTATUS@fda.hhs.gov or 301-796-8118

Records Processed under FOIA request 2016-2167; Released by CDRH on 09/06/2016

CERTIFICATION STATEMENT / INFORMATION *(Continued)*

10. If you checked box C, in number 9, provide the National Clinical Trial (NCT) Number(s) for any "applicable clinical trial(s)," under 42 U.S.C. § 282(J)(1)(a)(i), section 402(j)(1)(a)(i) of the Public Health Service Act, referenced in the application/ submission which this Certification accompanies. *(Add continuation page as necessary.)*

NCT Number(s): _____ _____ _____ _____ _____

Continuation Page for #10

The undersigned declares, to the best of her/his knowledge, that this is an accurate, true, and complete submission of information. I understand that the failure to submit the certification required by 42 U.S.C. § 282(j)(5)(B), section 402(j)(5)(B) of the Public Health Service Act, and the knowing submission of a false certification under such section are prohibited acts under 21 U.S.C. § 331, section 301 of the Federal Food, Drug, and Cosmetic Act.

Warning: A willfully and knowingly false statement is a criminal offense, U.S. Code, title 18, section 1001.

11. Name and Title of the Person who Signs Number 15

Name	Title
Eckhard Loh	Head of Quality and Regulatory Affairs

12. Address

Address 1 *(Street address, P.O. box, company name c/o)* Muenchholzhaeuser Str. 29	
Address 2 *(Apartment, suite, unit, building, floor, etc.)*	
City Wetzlar	State/Province/Region
Country Germany	ZIP or Postal Code 35582

13. Telephone and Fax Numbers *(Include country code if applicable and area code)*

(Tel): +49 641 2005-0

(Fax): +49 641 2005-255

14. Date of Certification

08/11/2015

15. Signature of Sponsor/Applicant/Submitter or an Authorized Representative *(Sign)*

Sign

This section applies only to requirements of the Paperwork Reduction Act of 1995.

*****DO NOT SEND YOUR COMPLETED FORM TO THE PRA STAFF EMAIL ADDRESS BELOW.*****

The burden time for this collection of information is estimated to average 15 minutes and 45 minutes (depending on the type of application/ submission) per response, including the time to review instructions, search existing data sources, gather and maintain the data needed and complete and review the collection of information. Send comments regarding this burden estimate or any other aspect of this information collection, including suggestions for reducing this burden to:

Department of Health and Human Services
Food and Drug Administration
Office of Chief Information Officer
Paperwork Reduction Act (PRA) Staff
PRAStaff@fda.hhs.gov

"An agency may not conduct or sponsor, and a person is not required to respond to, a collection of information unless it displays a currently valid OMB number."

Questions? Contact FDA/CDRH/OCE/DID at CDRH-FOISTATUS@fda.hhs.gov or 301-796-8118

Records Processed under FOIA request 2016-2167; Released by CDRH on 09/06/2016

X. FINANCIAL DISCLOSURES

Oculus is submitting clinical data to support this 510(k) notice. The Company is providing a certification to the absence of any financial arrangements for all investigators on the following page.

Questions? Contact FDA/CDRH/OCE/DID at CDRH-FOISTATUS@fda.hhs.gov or 301-796-8118

Records Processed under FOIA request 2016-2167; Released by CDRH on 09/06/2016

DEPARTMENT OF HEALTH AND HUMAN SERVICES
Food and Drug Administration

CERTIFICATION: FINANCIAL INTERESTS AND ARRANGEMENTS OF CLINICAL INVESTIGATORS

Form Approved: OMB No. 0910-0396
Expiration Date: December 31, 2015

TO BE COMPLETED BY APPLICANT

With respect to all covered clinical studies (or specific clinical studies listed below (if appropriate)) submitted in support of this application, I certify to one of the statements below as appropriate. I understand that this certification is made in compliance with 21 CFR part 54 and that for the purposes of this statement, a clinical investigator includes the spouse and each dependent child of the investigator as defined in 21 CFR 54.2(d).

Please mark the applicable check box.

☒ (1) As the sponsor of the submitted studies, I certify that I have not entered into any financial arrangement with the listed clinical investigators (enter names of clinical investigators below or attach list of names to this form) whereby the value of compensation to the investigator could be affected by the outcome of the study as defined in 21 CFR 54.2(a). I also certify that each listed clinical investigator required to disclose to the sponsor whether the investigator had a proprietary interest in this product or a significant equity in the sponsor as defined in 21 CFR 54.2(b) did not disclose any such interests. I further certify that no listed investigator was the recipient of significant payments of other sorts as defined in 21 CFR 54.2(f).

Clinical Investigators

(b) (6) [redacted]

☐ (2) As the applicant who is submitting a study or studies sponsored by a firm or party other than the applicant, I certify that based on information obtained from the sponsor or from participating clinical investigators, the listed clinical investigators (attach list of names to this form) did not participate in any financial arrangement with the sponsor of a covered study whereby the value of compensation to the investigator for conducting the study could be affected by the outcome of the study (as defined in 21 CFR 54.2(a)); had no proprietary interest in this product or significant equity interest in the sponsor of the covered study (as defined in 21 CFR 54.2(b)); and was not the recipient of significant payments of other sorts (as defined in 21 CFR 54.2(f)).

☐ (3) As the applicant who is submitting a study or studies sponsored by a firm or party other than the applicant, I certify that I have acted with due diligence to obtain from the listed clinical investigators (attach list of names) or from the sponsor the information required under 54.4 and it was not possible to do so. The reason why this information could not be obtained is attached.

NAME	TITLE
Eckhard Loh	Head of Quality and Regulatory Affairs
FIRM/ORGANIZATION OCULUS Optikgeraete GmbH	
SIG (b) (6) [redacted]	DATE *(mm/dd/yyyy)* 08/07/2015

This section applies only to the requirements of the Paperwork Reduction Act of 1995.

An agency may not conduct or sponsor, and a person is not required to respond to, a collection of information unless it displays a currently valid OMB control number. Public reporting burden for this collection of information is estimated to average 1 hour per response, including time for reviewing instructions, searching existing data sources, gathering and maintaining the necessary data, and completing and reviewing the collection of information. Send comments regarding this burden estimate or any other aspect of this collection of information to the address to the right:

Do NOT send your completed form to the PRA Staff email address below.

Department of Health and Human Services
Food and Drug Administration
Office of Chief Information Officer
PRAStaff@fda.hhs.gov

"An agency may not conduct or sponsor, and a person is not required to respond to, a collection of information unless it displays a currently valid OMB number."

FORM FDA 3454 (4/13)

PSC Publishing Services (301) 443-6740 EF

Questions? Contact FDA/CDRH/OCE/DID at CDRH-FOISTATUS@fda.hhs.gov or 301-796-8118

XI. DECLARATIONS OF CONFORMITY AND SUMMARY REPORTS

Consistent with FDA's guidance documents entitled "Use of Standards in Substantial Equivalence Determinations" (March 12, 2000) and “Guidance for Industry and FDA Staff - Recognition and Use of Consensus Standards” (September 17, 2007), Oculus is including this statement that the Pentacam® AXL complies with the following recognized consensus standards:

- IEC 60601-1: Medical Electrical Equipment – Part 1: General requirements for basic safety and essential performance
- IEC 60601-1-2: Medical Electrical Equipment – Part 1-2: General requirements for basic safety – Collateral standard: Electromagnetic compatibility requirements and tests
- EN ISO 15004-1: Ophthalmic instruments – Fundamental requirements and test methods – Part 1: General requirements applicable to all ophthalmic instruments
- EN ISO 15004-2: Ophthalmic instruments – Fundamental requirements and test methods – Part 2: Light hazard protection
- IEC 60825-1: Safety of laser products Part 1: Equipment classification, requirements and user’s guide Section two: Manufacturing requirements
- ISO 22665: Ophthalmic optics and instruments – instruments to measure axial distances in the eye

A Data Standards Form (FDA Form 3654) is provided in **Attachment 1** for each of the standards listed above. In addition, the test results for the above standards are described in **Sections XIX** and **XX** of this submission and the complete test reports are provided as attachments to this submission.

XII. EXECUTIVE SUMMARY

A. Intended Use/Indications for Use

The Pentacam® AXL is designed to take photos of the anterior segment of the eye which includes the cornea, pupil, anterior chamber and lens of the eye. To evaluate:

- corneal shape,
- analyze condition of the lens (opaque crystalline lens),
- analyze the anterior chamber angle,
- analyze anterior chamber depth,
- analyze the volume of the anterior chamber,
- analyze anterior or posterior cortical opacity,
- analyze the location of cataracts (nuclear, sub capsular and or cortical), using cross slit imaging with densitometry,
- corneal thickness,
- axial length (by optical biometry), and
- white-to-white distance.

The Pentacam® ® AXL also performs calculations to assist physicians in determining the power of the intraocular lens for implantation.

B. Device Description

The Pentacam® AXL combines the Scheimpflug functions of the cleared Pentacam® with the axial length measurements of an interferometer, such as that of the predicate IOLMaster 500 device.

The Pentacam® AXL features a Scheimpflug camera positioned in a unit that allows it to rotate around the eye and take photographs of the anterior segment of the eye at different axis positions. After doing so, the device also takes axial length measurements from the front edge of the cornea to the front of the retina in the same manner as an interferometer.

Axial length measurement is done by a built in interferometer (optical biometry using the principle of the Michelson interferometer.

The images and measurements resulting from these two functions are sent to the connected PC and translated into a three-dimensional model of the anterior and posterior corneal surface, iris, and lens and a simplified diagram of the measurement curve. The monitor displays this model and diagram, as well as corresponding data measurements.

1 - Patient and examination data
2 - Keratometer values
3 - Analysis of the anterior chamber
4 - Map
5 - Virtual eye
6 - Scheimpflug images
7 - Iris Image

Figure 1: Result screen of a Scheimpflug measurement

Using the measured values of axial length, white-to-white and specific data gathered from Scheimpflug imaging (depending on the used formula) the Pentacam® AXL software performs calculations to assist physicians in determining the power of the intraocular lens for implantation.

Figure 2: OCULUS Pentacam® AXL

C. Performance Data

To evaluate device safety and effectiveness, the following tests were performed:

- Test report IEC 60601-1 – "Medical electrical equipment – Part 1: General requirements for basic safety and essential performance"
- Test report IEC 60601-1-2 – "Medical electrical equipment – Part 1-2: General requirements for basic safety and essential performance - Collateral standard: Electromagnetic compatibility – requirements and tests"
- Test report ISO 15004-1 – "Ophthalmic instruments – Fundamental requirements and test methods – Part 1: General requirements applicable to all ophthalmic instruments"
- Test report ISO 15004-2 – "Ophthalmic instruments – Fundamental requirements and test methods – Part 2: Light hazard protection"
- Test report IEC 60285-1 – "Safety of laser products - Part 1: Equipment classification, requirements and user's guide "
- Test report ISO 22665 – "Ophthalmic optics and instrument – Instruments to measure axial distances in the eye "

D. Clinical Data

(b)(4)

[redacted]

Records Processed under FOIA request 2016-2167; Released by CDRH on 09/06/2016

(b)(4)

[redacted]

Questions? Contact FDA/CDRH/OCE/DID at CDRH-FOISTATUS@fda.hhs.gov or 301-796-8118

(b)(4)

[redacted]

A substantial equivalence chart comparing the similarities and differences between the Pentacam® AXL and its predicate devices is provided below.

Device Type	**Applicant Device**	**Predicate device (biometry)**	**Predicate device (Scheimpflug imaging)**
Model	Pentacam® AXL	IOLMaster 500	Pentacam®
Manufacturer name	OCULUS Optikgeraete GmbH	Carl Zeiss Meditec AG	OCULUS Optikgeraete GmbH
	The Pentacam® AXL is designed to take photos of the anterior segment of the eye which includes the cornea, pupil, anterior chamber and lens of the eye. To evaluate: •corneal shape, •analyze condition of the lens (opaque crystalline lens), •analyze the anterior chamber angle, •analyze anterior chamber depth, •analyze the volume of the anterior chamber, •analyze anterior or posterior cortical opacity, •analyze the location of cataracts (nuclear, sub capsular and or cortical), using cross slit imaging with densitometry, •corneal thickness, •*axial length* (by optical biometry), •*white-to-white* distance. The Pentacam® AXL also performs *calculations* to assist physicians in *determining the power of the intraocular lens* for implantation	The IOLMaster is intended for *the biometric determination of ocular measurements of axial length,* anterior chamber depth*,* corneal radius*, white-to-white (WTW),* and for the measurement of pupil size and deviation of the visual axis from the center of the pupil. *For patients who are candidates for intraocular lens (IOL) implantation, the device also performs calculations to assist Physicians in determining the appropriate IOL power and type for implantation.* This device is intended for use by physicians and eye-care professionals and may only be used under the supervision of a physician.	The Pentacam® AXL is designed to take photos of the anterior segment of the eye which includes the cornea, pupil, anterior chamber and lens of the eye. To evaluate: •corneal shape, •analyze condition of the lens (opaque crystalline lens), •analyze the anterior chamber angle, •analyze anterior chamber depth, •analyze the volume of the anterior chamber, •analyze anterior or posterior cortical opacity, •analyze the location of cataracts (nuclear, sub capsular and or cortical), using cross slit imaging with densitometry, •corneal thickness
Scheimpflug	Digital CCD camera	N/A	Digital CCD camera

Device Type	Applicant Device	Predicate device (biometry)	Predicate device (Scheimpflug imaging)
Camera			
Resolution of Scheimpflug camera	1392x1040 pixel	N/A	752x582 pixel (HR: 1392x1040)
Slit length	14 mm	N/A	14 mm
Slit width	35 µm	N/A	80 µm (HR: 35 µm)
Light source for slit illumination	Blue slit lamp (LED 470 nm)	N/A	Blue slit lamp (LED 470 nm)
Light source for eye illumination	4 IR LEDs (810 nm)	N/A	2 IR LEDs (880 nm)
Images	50 in 2 seconds	N/A	25 in 2 seconds (HR: 50 in 2 seconds)
Rotation	360°	N/A	360°
Measuring points	up to 138,000	N/A	up to 25,000 (HR: up to 138.000)
Working distance	80 mm	N/A	80 mm
Physical principle	Scheimpflug principle / Optical interferometer	Optical interferometer	Scheimpflug principle
Calculation principle	Edge detection and 3D regression polynomial functions; detection of interference pattern and consideration of mirror position	Detection of interference pattern and consideration of mirror position	Edge detection and 3D regression polynomial functions
Auto release function	Yes	No	Yes
Auto movement system	No	No	No
Fixation light	Yes, red LED (640 nm)	Yes, yellow LED (590 nm)	No, marking onto glass plate (HR: yes, red LED (640 nm))
Overview camera	Digital CMOS camera	Digital CMOS camera	Digital CMOS camera
Resolution of overview camera	640 x 480	640 x 480	640 x 480

Device Type	Applicant Device	Predicate device (biometry)	Predicate device (Scheimpflug imaging)
Measurement range - Axial length	14 – 40 mm	14 – 40 mm	N/A
Light source for interferometer	IR Super luminescence diode (SLD)	IR Semiconductor diode laser (MMLD)	N/A
Wavelength	880 nm	880 nm	N/A
Power for measurement	0.84 mW	0.45 mW	N/A
Power for alignment	None	0.08 mW	N/A
Pulse width	0.4 s	0.5 s	N/A
ISO 60825-1 classification	Class 1 laser product	Class 1 laser product	Class 1 laser product
Embedded laser class (not accessible)	3R	3B	1M
White-to-white measurement principle	Analysis of overview image	Analysis of overview image	N/A
Power supply	HMEG49 Medical power adapter Input: 90- 264 V AC; 47 – 63 Hz Output: 24 V DX, 2.1 A	100 to 240 V AC (+/- 10%) 50-60 Hz	HMEG49 Medical power adapter Input: 90- 264 V AC; 47 – 63 Hz Output: 24 V DX, 2.1 A
Power consumption	max 35 W	Max 90 VA	max 35 W
Protection class	2	1	2
Protection type	IP 20	IP 20	IP 20
Device type	B	B	N/A
Dimensions	274 mm x 316 mm x 500-530 (WxDxH)	390 mm x 300 mm x 610 mm (WxDxH)	274 mm x 316 mm x 505-535 mm (WxDxH)
Weight	13.2 kg	18 kg	11.0 kg

XIII. DEVICE DESCRIPTION

The Pentacam® AXL combines the Scheimpflug functions of the cleared Oculus Pentacam® device (K030719) with the axial length measurements of an interferometer.

A. Intended Use/Indication for Use

The Pentacam® is designed to take photos of the anterior segment of the eye which includes the cornea, pupil, anterior chamber and lens of the eye. To evaluate:

- corneal shape,
- analyze condition of the lens (opaque crystalline lens),
- analyze the anterior chamber angle,
- analyze anterior chamber depth,
- analyze the volume of the anterior chamber,
- analyze anterior or posterior cortical opacity,
- analyze the location of cataracts (nuclear, sub capsular and or cortical), using cross slit imaging with densitometry,
- corneal thickness,

Existing intended use for Pentacam® (K030719)

- axial length (by optical biometry),
- white-to-white distance.

The Pentacam® AXL also performs calculations to assist physicians in determining the power of the intraocular lens for implantation.

Extension for Pentacam® AXL

B. Patient Population/Medical Condition

The intended patient population and medical condition to be diagnosed and/or treated and other considerations such as patient selection criteria are not further specified. There are no known criteria for exclusion.

C. Technological Characteristics

1. Device Components and System Configuration

1 - Ventilation opening
2 - Measuring window
3 – Scheimpflug camera opening
4 - On/off switch with indicator light
5 - Y-cable connector
6 - Cross slide
7 - Sliding plate with circular markings
8 - Joystick

Figure 3: Device components

1. Ventilation opening – The ventilation opening provides light that illuminates a sectional plane from the front surface of the cornea to crystalline lens of the eye.

2. Measuring window – The measuring window provides the window through which axial measurements are taken.

3. Scheimpflug camera – The Scheimpflug camera takes photographs of the anterior section of the eye using the light being provided from the ventilation opening. The camera rotates around the eye to take photographs of the eye from numerous angles before sending them to the computer for analysis and measurements.

4. On/off switch with indicator light – The indicator light shines when the device is powered and the switch is in the "on" position.

5. Y-cable connector – The Y-cable connector connects the device to a computer via a Y-cable to USB connection. This connection allows data to be sent from the device to the computer to be processed using Pentacam® software.

6. Cross slide – The cross slide provides the foundation from which the camera can be adjusted on the x, y, and z axes as needed for photographs and measurements. The device can adjust on the x-axis (left-right) by 100 mm, the y-axis (up-down) by 32 mm, and the z-axis (back and forth) by 100 mm. The physician moves the cross slide until the Scheimpflug image is shown on the monitor display.

7. Sliding plate with circular markings – The sliding plate provides the foundation for lateral movement of the device's camera section, or the "head" of the device.

8. Joystick – The joystick is used to move the head of the device so that the camera is focused on the eye. When the focus is such that measurements can be taken, the monitor will show a yellow dot in the center of the crosshairs. The joystick can then be used to implement fine adjustments based on information provided in the adjustment window. When the position is sufficiently accurate, a black cross will appear on the monitor, after which the measurement process automatically begins or can be initiated manually.

9. Chin and forehead rest (see **Figures 4** and **5** below) – The Pentacam® AXL also has a chin and forehead rest. These rests provide stable support of the patient's head during an examination and are tested for safety in combination with the Pentacam® AXL.

Further detailed drawings and technical specifications of the device are provided at the conclusion of this section.

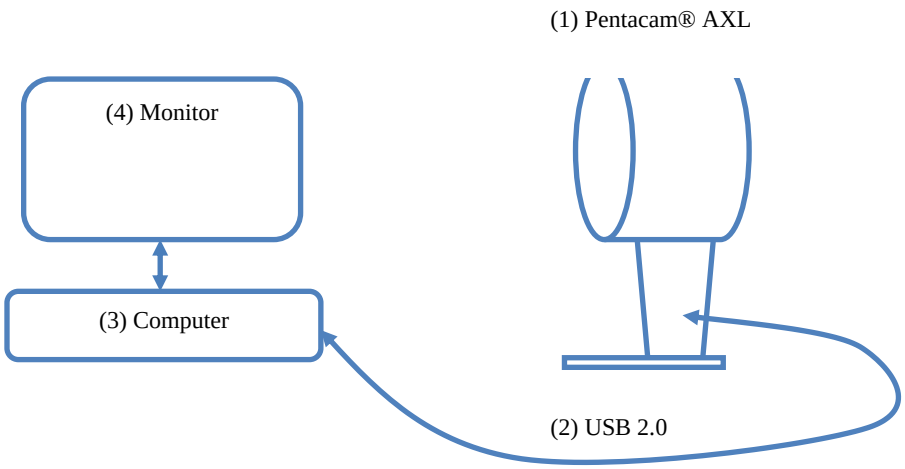

1 - Pentacam® AXL for image and data acquisition
2 - USB 2.0 Interface for data transfer
3 - Computer for user interface, device control and data calculation
4 - Monitor for user interface and visualization of output data

Figure 4: System configuration

Figure 5: Examination setup

The duration of an axial length measurement is approximately 0.4 seconds. During this period up to four million samples are recorded and transmitted to the PC. The Pentacam® software filters the signal and determines the axial length and the quality of the signal by means of SNR value (Signal to Noise).

The axial length is measured from the front edge of the cornea to the front of the retina. The measurement range is 14 to 40mm. The result of the measurement is shown in simplified form as a diagram of the measurement curve with the peak corresponding to the determined axial length additional to the result values in the software.

Consecutive to the axial length measurement the Scheimpflug images are recorded by rotation of the measuring head.

The results of the measurements are illustrated by colored screen images (maps). The Quality Specification (QS) shows the quality of the current measurement.

Further details regarding each of the measurement steps is provided below:

D. Principles of operation

(b)(4)

[redacted]

(b)(4)

[redacted]

(b)(4)

[redacted]

(b)(4)

[redacted]

(b)(4)

[redacted]

(b)(4)

[redacted]

(b)(4)

[redacted]

(b)(4)

[redacted]

(b)(4) Schematic Drawings

[redacted]

Figure 14: Pentacam® AXL mounted on an examination table

2. Materials

The metal housing parts of the device are made from aluminum alloy (AlMgSi1; EN AW-6082). Plastic parts are made from thermoplastic foam cast (styrene butadiene molding material).

Applied parts, which are intended to be in contact with the patient skin, consists of PTFE (forehead rest) and of ABS (F5330) if no chin rest paper is used (chin rest).

3. Technical specifications

Measuring equipment	
Camera	Digital CCD camera
Light source	Blue LEDs (475 nm, UV-free)
Speed measuring	50 images in 2 seconds, 2760 points per recorded image
Number of evaluated measuring points	max. 138,000
Dimensions W x D x H	274 x 316 x 500-530 mm
Weight	13.2 kg
Measuring range	
Curvature:	3 to 38 mm 9 to 99 D
Accuracy	± 0.1 D
Reproducibility	± 0.1 D
Working distance	80 mm
Axial length	14 to 40 mm
Power adapter	
Power adapter HEMG 49 (05150150)	
Mains connection	90 - 264 V AC
Frequency	47 - 63 Hz
Power input, max.	85 VA
Output voltage	24 V DC
Fuses	Integrated overcurrent shut-off
Power supply Pentacam® AXL	
Output voltage	24 V DC
Max. power consumption	35 W
Other information	
Contraindications	None noted

Lifecycle expectancy	Up to 10 years
Classification according to IEC 60601 - 1	
Type of protection against electrical shock	Protection class II
Level of protection against electrical shock	Type B
Level of protection against damaging water entry	IP20
Ambient operating requirements	
Temperature	+10 °C to +40 °C
Humidity	30% to 75%
Air pressure	700hPa to 1060hPa
Storage conditions according to DIN EN 60601-1	
Ambient temperature range	-10°C to +55°C
Relative humidity, including condensation	10% to 95%
Air pressure range	700 hPa to 1060 hPa
Transport conditions according to DIN EN 60601-1	
Ambient temperature range	-40°C to +70°C
Relative humidity, including condensation	10% to 95%
Air pressure range	500 hPa to 1060 hPa
CE in accordance with EC Directive 93/42/EEC for medical Devices	The unit is a Class IIa product.
Classification according to IEC 60825-1: 2007	
The unit contains a	Class 1 laser
Maximum output of the laser radiation	0.84 mW
Pulse duration	400 ms
Wavelength	880 nm

4. Components/Accessories

Components and accessories for the usage of the Pentacam® AXL are:

- Power Adapter
- USB Adapter cable (Y-cable)
- Base Unit
- Chin- and forehead-rest

Power Adapter
The power adapter (part no. 05150150) is a medical power supply and is needed for power supply of the Pentacam® AXL device. This accessory is tested for safety according IEC 60601 in combination with the Pentacam® AXL device.

HMEG49 (Type S240210-7)
Medical power supply

Input:	100-240 V AC 50-60 Hz
Output:	24 V DC; 2.1 A
Insulation:	double insulation from primary
Safety certificates:	UL, IEC 60601, CB certificate

USB adapter cable
The USB adapter cable (part no. 70900 00 052) is a combination of power supply and USB connection (Y-cable) for the Pentacam® AXL. This accessory is tested for safety according IEC 60601 in combination with the Pentacam® AXL device.

Base unit
The Pentacam® AXL device is mounted on the base unit (an in x, y, and z movable cross slide, see **Figure 15**Figure). The base unit is used for device alignment and left/right detection (which eye is measured). This accessory is tested for safety according IEC 60601 in combination with the Pentacam® AXL device.

The traveling distance for adjustment/device alignment is:

X-direction (left/right):	100 mm	(4.33 in)
Y-direction (up/down):	32 mm	(1.26 in)
Z-direction (back/forth)	100 mm	(4.33 in)

Chin- and forehead rest
The chin and forehead rest (see **Figure 15**) is intended to place patient's chin and forehead due to calm support of the patient's head during an examination (see also **Figure 5**). This

accessory is tested for safety according IEC 60601 in combination with the Pentacam® AXL device.

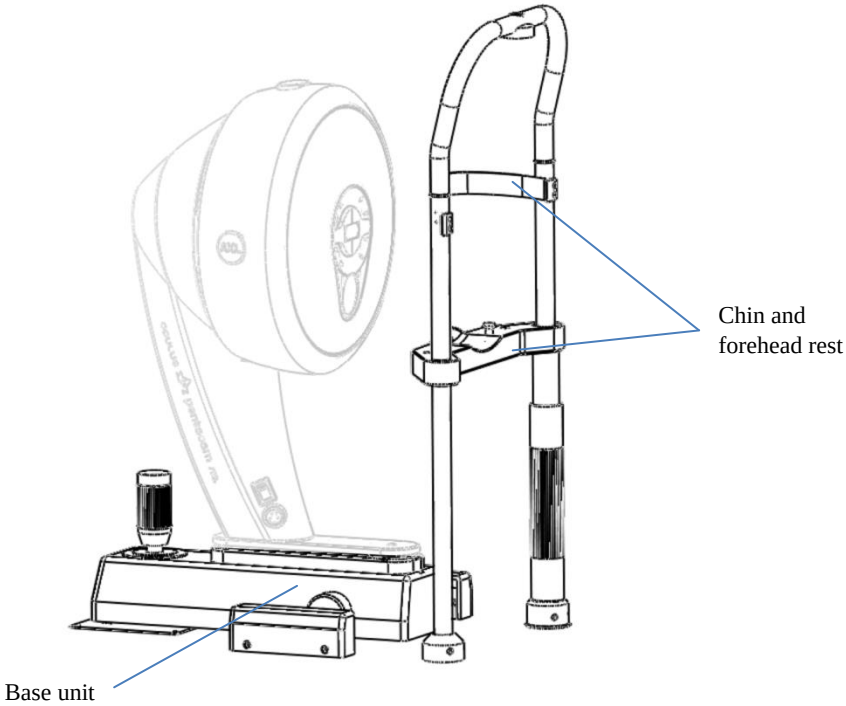

Figure15: Base unit and chin-/forehead rest

(b)(4)

[redacted]

(b)(4)

[redacted]

(b)(4)

[redacted]

(b)(4)

[redacted]

(b)(4)

[redacted]

Records Processed under FOIA request 2016-2167; Released by CDRH on 09/06/2016

XV. LABELING

The draft labeling of the Pentacam® AXL, including the device's label, the Operator's Manual is provided in **Attachment 2**.

Questions? Contact FDA/CDRH/OCE/DID at CDRH-FOISTATUS@fda.hhs.gov or 301-796-8118

XVI. STERILIZATION AND SHELF LIFE

The cleaning and disinfection procedures of the Pentacam® AXL are the same as the previously cleared device Pentacam.

A. Cleaning

Cleaning instructions are provided in Section 15.1 of the Operator's Manual and are summarized below.

Cleaning intervals

Clean the components of the Pentacam® AXL once a month or as necessary.

Cleaning the Housing

- It is best to clean the housing surfaces with a soft cloth and an anti-static cleaning agent.
- Wipe off any residue from painted surfaces with the mixture for painted surfaces.

Cleaning the Chin-Forehead Rest

- Clean the chin-forehead rest with a soap solution (or with alcohol, if very dirty).
- Make sure that no liquid gets into any of the openings of the Pentacam® AXL. Do not use liquid from aerosol cans.
- Use a lint-free, damp cloth.

Cleaning the illuminated slit

The optical components illuminating the slit, and the lens in front of the camera, are precision parts and sensitive to pressure. The surfaces of these components are susceptible to scratching.

Attention: When cleaning the illuminated slit, do not use a cloth or other cleaning agents.

- Carefully clean the centre of the illuminated slit with purified compressed air.
- Clean the lens in front of the camera using a dry, lint-free cloth.
- Clean the acrylic glass with a commercial cleaning agent.

B. Disinfection

Section 15.2 of the Operator's Manual states that it is recommended to use disinfection wipes suitable for medical devices.

The instructions recommend that the forehead rest is disinfected after each examination. Additionally, if paper for the chinrest, the instructions recommend to disinfect the chinrest after each examination.

Records Processed under FOIA request 2016-2167; Released by CDRH on 09/06/2016

C. Sterilization

The Pentacam® AXL is not sold sterile, nor is it intended to be sterilized by the user

D. Shelf Life Expectancy

The shelf life expectancy of the Pentacam® AXL is up to 10 (ten) years.

Questions? Contact FDA/CDRH/OCE/DID at CDRH-FOISTATUS@fda.hhs.gov or 301-796-8118

Records Processed under FOIA request 2016-2167; Released by CDRH on 09/06/2016

XVII. BIOCOMPATIBILITY

The Pentacam® AXL contains the following patient contacting components: Head and Chinrest internal part No 70518. These components are classified as surface-contacting components with less than 24-hour contact duration. The biocompatibility of the Pentacam® AXL is based on FDA's clearance of the Pentacam® (K030719) that contains tissue contact materials for similar uses. The biocompatibility certification is provided on the following page.

Questions? Contact FDA/CDRH/OCE/DID at CDRH-FOISTATUS@fda.hhs.gov or 301-796-8118

(b)(4)

Records Processed under FOIA request 2016-2167; Released by CDRH on 09/06/2016

XVIII. SOFTWARE

(b)(4)

[redacted]

XIX. ELECTROMAGNETIC COMPATIBILITY AND ELECTRICAL SAFETY

A. Electrical Safety Report

Testing was conducted to demonstrate that the Pentacam® AXL performs in conformance to consensus standard IEC 60601-1 (3rd edition): Medical Electrical Equipment; Part 1: General requirements for basic safety and essential performance. All necessary tests were performed with the AXL software version v1.20b15.2835; the device met all required elements and operated as intended. See the test protocol and report in **Attachment 4** (5083-14-PP-15-PP003).

B. Electromagnetic Compatibility

Testing was conducted to demonstrate that the Pentacam® AXL performs in conformance to the EMC requirements according to clause 6 of EN 60601-1-2: 2007. The device fulfilled the standard requirements in emission tests and immunity tests, and operated as intended. See the test report in **Attachment 5** (5083-14-PE-15-PB001).

XX. PERFORMANCE TESTING - BENCH

Testing was performed in accordance with various recognized standards, as follows:

- **Attachment 6.** ISO 15004-1:2006: Ophthalmic instruments – Fundamental requirements and test methods; Part 1: General requirements applicable to all ophthalmic instruments.

- **Attachment 7.** ISO 15004-2:2007-06: Ophthalmic instruments – Fundamental requirements and test methods; Part 2: Light Hazard Protection

- **Attachment 8.** IEC 60825-1, 2007: Safety of laser products; Part 1: Equipment classification, requirements and user's guide; Section two: manufacturing requirements.

- **Attachment 9.** ISO 22665:2012 – Ophthalmic optics and instruments – instruments to measure axial distances in the eye and to demonstrate accuracy and reproducibility in the stated measuring range of 14-40 mm.

Records Processed under FOIA request 2016-2167; Released by CDRH on 09/06/2016

XXI. PERFORMANCE TESTING - ANIMAL

No animal data is being provided in support of this submission; thus, this section does not apply.

Questions? Contact FDA/CDRH/OCE/DID at CDRH-FOISTATUS@fda.hhs.gov or 301-796-8118

Records Processed under FOIA request 2016-2167; Released by CDRH on 09/06/2016

XXII. PERFORMANCE TESTING - CLINICAL

(b)(4)

Records Processed under FOIA request 2016-2167; Released by CDRH on 09/06/2016

(b)(4)

Questions? Contact FDA/CDRH/OCE/DID at CDRH-FOISTATUS@fda.hhs.gov or 301-796-8118

Records Processed under FOIA request 2016-2167; Released by CDRH on 09/06/2016

(b)(4)

Questions? Contact FDA/CDRH/OCE/DID at CDRH-FOISTATUS@fda.hhs.gov or 301-796-8118

(b)(4)

[redacted]

Records Processed under FOIA request 2016-2167; Released by CDRH on 09/06/2016

Attachment 1

Standards Data Report Forms

- **IEC 60601-1**
- **IEC 60601-1-2**
- **EN ISO 15004-1**
- **EN ISO 15004-2**
- **IEC 60825-1**
- **ISO 22665**

Questions? Contact FDA/CDRH/OCE/DID at CDRH-FOISTATUS@fda.hhs.gov or 301-796-8118

Records Processed under FOIA request 2016-2167; Released by CDRH on 09/06/2016

Department of Health and Human Services
Food and Drug Administration

STANDARDS DATA REPORT FOR 510(k)s

(To be filled in by applicant)

This report and the Summary Report Table are to be completed by the applicant when submitting a 510(k) that references a national or international standard. A separate report is required for each standard referenced in the 510(k).

TYPE OF 510(K) SUBMISSION

☒ Traditional ☐ Special ☐ Abbreviated

STANDARD TITLE [1]

IEC 60601-1: Medical Electrical Equipment – Part 1: General requirements for basic safety and essential performance

Please answer the following questions	Yes	No
Is this standard recognized by FDA [2]?	☒	☐
FDA Recognition number [3]	#19-4	
Was a third party laboratory responsible for testing conformity of the device to this standard identified in the 510(k)?	☒	☐
Is a summary report [4] describing the extent of conformance of the standard used included in the 510(k)? If no, complete a summary report table.	☒	☐
Does the test data for this device demonstrate conformity to the requirements of this standard as it pertains to this device?	☒	☐
Does this standard include acceptance criteria? If no, include the results of testing in the 510(k).	☒	☐
Does this standard include more than one option or selection of tests? If yes, report options selected in the summary report table.	☐	☒
Were there any deviations or adaptations made in the use of the standard?	☐	☒
If yes, were deviations in accordance with the FDA supplemental information sheet (SIS) [5]?	☐	☐
Were deviations or adaptations made beyond what is specified in the FDA SIS? If yes, report these deviations or adaptations in the summary report table.	☐	☒
Were there any exclusions from the standard? If yes, report these exclusions in the summary report table.	☐	☒
Is there an FDA guidance [6] that is associated with this standard?	☐	☒
If yes, was the guidance document followed in preparation of this 510k?	☐	☐

Title of guidance: _____

[1] The formatting convention for the title is: [SDO] [numeric identifier] [title of standard] [date of publication]

[2] Authority [21 U.S.C. 360d], http://www.fda.gov/MedicalDevices/DeviceRegulationandGuidance/Standards/default.htm

[3] http://www.accessdata.fda.gov/scripts/cdrh/cfdocs/cfStandards/search.cfm

[4] The summary report should include: any adaptations used to adapt to the device under review (for example, alternative test methods); choices made when options or a selection of methods are described; deviations from the standard; requirements not applicable to the device; and the name and address of the test laboratory or certification body involved in conformance assessment to this standard. The summary report includes information on all standards utilized during the development of the device.

[5] The supplemental information sheet (SIS) is additional information which is necessary before FDA recognizes the standard. Found at http://www.accessdata.fda.gov/scripts/cdrh/cfdocs/cfStandards/search.cfm

[6] The online search for CDRH Guidance Documents can be found at http://www.fda.gov/MedicalDevices/DeviceRegulationandGuidance/GuidanceDocuments/default.htm

Questions? Contact FDA/CDRH/OCE/DID at CDRH-FOISTATUS@fda.hhs.gov or 301-796-8118

Records Processed under FOIA request 2016-2167; Released by CDRH on 09/06/2016

EXTENT OF STANDARD CONFORMANCE SUMMARY REPORT TABLE

STANDARD TITLE
IEC 60601-1: Medical Electrical Equipment – Part 1: General requirements for basic safety and essential performance

CONFORMANCE WITH STANDARD SECTIONS*

SECTION NUMBER	SECTION TITLE	CONFORMANCE? ☐ Yes ☐ No ☐ N/A
TYPE OF DEVIATION OR OPTION SELECTED ◆		
DESCRIPTION		
JUSTIFICATION		

SECTION NUMBER	SECTION TITLE	CONFORMANCE? ☐ Yes ☐ No ☐ N/A
TYPE OF DEVIATION OR OPTION SELECTED ◆		
DESCRIPTION		
JUSTIFICATION		

SECTION NUMBER	SECTION TITLE	CONFORMANCE? ☐ Yes ☐ No ☐ N/A
TYPE OF DEVIATION OR OPTION SELECTED ◆		
DESCRIPTION		
JUSTIFICATION		

* For completeness list all sections of the standard and indicate whether conformance is met. If a section is not applicable (N/A) an explanation is needed under "justification." Some standards include options, so similar to deviations, the option chosen needs to be described and adequately justified as appropriate for the subject device. Explanation of all deviations or description of options selected when following a standard is required under "type of deviation or option selected," "description" and "justification" on the report. More than one page may be necessary.

◆ Types of deviations can include an exclusion of a section in the standard, a deviation brought out by the FDA supplemental information sheet (SIS), a deviation to adapt the standard to the device, or any adaptation of a section.

This section applies only to requirements of the Paperwork Reduction Act of 1995.

DO NOT SEND YOUR COMPLETED FORM TO THE PRA STAFF EMAIL ADDRESS BELOW.

The burden time for this collection of information is estimated to average 1 hour per response, including the time to review instructions, search existing data sources, gather and maintain the data needed and complete and review the collection of information. Send comments regarding this burden estimate or any other aspect of this information collection, including suggestions for reducing this burden, to:

Department of Health and Human Services
Food and Drug Administration
Office of Chief Information Officer
Paperwork Reduction Act (PRA) Staff
PRAStaff@fda.hhs.gov

"An agency may not conduct or sponsor, and a person is not required to respond to, a collection of information unless it displays a currently valid OMB control number."

Questions? Contact FDA/CDRH/OCE/DID at CDRH-FOISTATUS@fda.hhs.gov or 301-796-8118

Records Processed under FOIA request 2016-2167; Released by CDRH on 09/06/2016
Form Approved: OMB No. 0910-0120; Expiration Date: 1/31/2017

Department of Health and Human Services
Food and Drug Administration

STANDARDS DATA REPORT FOR 510(k)s

(To be filled in by applicant)

This report and the Summary Report Table are to be completed by the applicant when submitting a 510(k) that references a national or international standard. A separate report is required for each standard referenced in the 510(k).

TYPE OF 510(K) SUBMISSION

☒ Traditional ☐ Special ☐ Abbreviated

STANDARD TITLE [1]

IEC 60601-1-2: Medical Electrical Equipment – Part 1-2: General requirements for basic safety and essential performance– Collateral standard: Electromagnetic compatibility requirements and tests

Please answer the following questions	Yes	No
Is this standard recognized by FDA [2]?	☒	☐
FDA Recognition number [3]	#19-2	
Was a third party laboratory responsible for testing conformity of the device to this standard identified in the 510(k)?	☒	☐
Is a summary report [4] describing the extent of conformance of the standard used included in the 510(k)? If no, complete a summary report table.	☒	☐
Does the test data for this device demonstrate conformity to the requirements of this standard as it pertains to this device?	☒	☐
Does this standard include acceptance criteria? If no, include the results of testing in the 510(k).	☒	☐
Does this standard include more than one option or selection of tests? If yes, report options selected in the summary report table.	☐	☒
Were there any deviations or adaptations made in the use of the standard?	☐	☒
If yes, were deviations in accordance with the FDA supplemental information sheet (SIS) [5]?	☐	☐
Were deviations or adaptations made beyond what is specified in the FDA SIS? If yes, report these deviations or adaptations in the summary report table.	☐	☒
Were there any exclusions from the standard? If yes, report these exclusions in the summary report table.	☐	☒
Is there an FDA guidance [6] that is associated with this standard?	☐	☒
If yes, was the guidance document followed in preparation of this 510k?	☐	☐

Title of guidance: _____

[1] The formatting convention for the title is: [SDO] [numeric identifier] [title of standard] [date of publication]

[2] Authority [21 U.S.C. 360d], http://www.fda.gov/MedicalDevices/DeviceRegulationandGuidance/Standards/default.htm

[3] http://www.accessdata.fda.gov/scripts/cdrh/cfdocs/cfStandards/search.cfm

[4] The summary report should include: any adaptations used to adapt to the device under review (for example, alternative test methods); choices made when options or a selection of methods are described; deviations from the standard; requirements not applicable to the device; and the name and address of the test laboratory or certification body involved in conformance assessment to this standard. The summary report includes information on all standards utilized during the development of the device.

[5] The supplemental information sheet (SIS) is additional information which is necessary before FDA recognizes the standard. Found at http://www.accessdata.fda.gov/scripts/cdrh/cfdocs/cfStandards/search.cfm

[6] The online search for CDRH Guidance Documents can be found at http://www.fda.gov/MedicalDevices/DeviceRegulationandGuidance/GuidanceDocuments/default.htm

Questions? Contact FDA/CDRH/OCE/DID at CDRH-FOISTATUS@fda.hhs.gov or 301-796-8118

Records Processed under FOIA request 2016-2167; Released by CDRH on 09/06/2016

EXTENT OF STANDARD CONFORMANCE SUMMARY REPORT TABLE

STANDARD TITLE
IEC 60601-1-2: Medical Electrical Equipment – Part 1-2: General requirements for basic safety and essential performance– Collateral standard: Electromagnetic compatibility requirements and tests

CONFORMANCE WITH STANDARD SECTIONS*

SECTION NUMBER	SECTION TITLE	CONFORMANCE? ☐ Yes ☐ No ☐ N/A
TYPE OF DEVIATION OR OPTION SELECTED ◆		
DESCRIPTION		
JUSTIFICATION		

SECTION NUMBER	SECTION TITLE	CONFORMANCE? ☐ Yes ☐ No ☐ N/A
TYPE OF DEVIATION OR OPTION SELECTED ◆		
DESCRIPTION		
JUSTIFICATION		

SECTION NUMBER	SECTION TITLE	CONFORMANCE? ☐ Yes ☐ No ☐ N/A
TYPE OF DEVIATION OR OPTION SELECTED ◆		
DESCRIPTION		
JUSTIFICATION		

* For completeness list all sections of the standard and indicate whether conformance is met. If a section is not applicable (N/A) an explanation is needed under "justification." Some standards include options, so similar to deviations, the option chosen needs to be described and adequately justified as appropriate for the subject device. Explanation of all deviations or description of options selected when following a standard is required under "type of deviation or option selected," "description" and "justification" on the report. More than one page may be necessary.

◆ Types of deviations can include an exclusion of a section in the standard, a deviation brought out by the FDA supplemental information sheet (SIS), a deviation to adapt the standard to the device, or any adaptation of a section.

This section applies only to requirements of the Paperwork Reduction Act of 1995.

DO NOT SEND YOUR COMPLETED FORM TO THE PRA STAFF EMAIL ADDRESS BELOW.

The burden time for this collection of information is estimated to average 1 hour per response, including the time to review instructions, search existing data sources, gather and maintain the data needed and complete and review the collection of information. Send comments regarding this burden estimate or any other aspect of this information collection, including suggestions for reducing this burden, to:

Department of Health and Human Services
Food and Drug Administration
Office of Chief Information Officer
Paperwork Reduction Act (PRA) Staff
PRAStaff@fda.hhs.gov

"An agency may not conduct or sponsor, and a person is not required to respond to, a collection of information unless it displays a currently valid OMB control number."

Questions? Contact FDA/CDRH/OCE/DID at CDRH-FOISTATUS@fda.hhs.gov or 301-796-8118

Records Processed under FOIA request 2016-2167; Released by CDRH on 09/06/2016

Department of Health and Human Services
Food and Drug Administration

STANDARDS DATA REPORT FOR 510(k)s

(To be filled in by applicant)

This report and the Summary Report Table are to be completed by the applicant when submitting a 510(k) that references a national or international standard. A separate report is required for each standard referenced in the 510(k).

TYPE OF 510(K) SUBMISSION

☒ Traditional ☐ Special ☐ Abbreviated

STANDARD TITLE [1]

EN ISO 15004-1: Ophthalmic instruments – Fundamental requirements and test methods – Part 1: General requirements applicable to all ophthalmic instruments

Please answer the following questions	Yes	No
Is this standard recognized by FDA [2]?	☒	☐
FDA Recognition number [3]	#10-72	
Was a third party laboratory responsible for testing conformity of the device to this standard identified in the 510(k)?	☒	☐
Is a summary report [4] describing the extent of conformance of the standard used included in the 510(k)? If no, complete a summary report table.	☒	☐
Does the test data for this device demonstrate conformity to the requirements of this standard as it pertains to this device?	☒	☐
Does this standard include acceptance criteria? If no, include the results of testing in the 510(k).	☒	☐
Does this standard include more than one option or selection of tests? If yes, report options selected in the summary report table.	☐	☒
Were there any deviations or adaptations made in the use of the standard?	☐	☒
If yes, were deviations in accordance with the FDA supplemental information sheet (SIS) [5]?	☐	☐
Were deviations or adaptations made beyond what is specified in the FDA SIS? If yes, report these deviations or adaptations in the summary report table.	☐	☒
Were there any exclusions from the standard? If yes, report these exclusions in the summary report table.	☐	☒
Is there an FDA guidance [6] that is associated with this standard?	☐	☒
If yes, was the guidance document followed in preparation of this 510k?	☐	☐

Title of guidance: _____

[1] The formatting convention for the title is: [SDO] [numeric identifier] [title of standard] [date of publication]

[2] Authority [21 U.S.C. 360d], http://www.fda.gov/MedicalDevices/DeviceRegulationandGuidance/Standards/default.htm

[3] http://www.accessdata.fda.gov/scripts/cdrh/cfdocs/cfStandards/search.cfm

[4] The summary report should include: any adaptations used to adapt to the device under review (for example, alternative test methods); choices made when options or a selection of methods are described; deviations from the standard; requirements not applicable to the device; and the name and address of the test laboratory or certification body involved in conformance assessment to this standard. The summary report includes information on all standards utilized during the development of the device.

[5] The supplemental information sheet (SIS) is additional information which is necessary before FDA recognizes the standard. Found at http://www.accessdata.fda.gov/scripts/cdrh/cfdocs/cfStandards/search.cfm

[6] The online search for CDRH Guidance Documents can be found at http://www.fda.gov/MedicalDevices/DeviceRegulationandGuidance/GuidanceDocuments/default.htm

Questions? Contact FDA/CDRH/OCE/DID at CDRH-FOISTATUS@fda.hhs.gov or 301-796-8118

Records Processed under FOIA request 2016-2167; Released by CDRH on 09/06/2016

EXTENT OF STANDARD CONFORMANCE SUMMARY REPORT TABLE

STANDARD TITLE
EN ISO 15004-1: Ophthalmic instruments – Fundamental requirements and test methods – Part 1: General requirements applicable to all ophthalmic instruments

CONFORMANCE WITH STANDARD SECTIONS*

SECTION NUMBER	SECTION TITLE	CONFORMANCE? ☐ Yes ☐ No ☐ N/A
TYPE OF DEVIATION OR OPTION SELECTED ◆		
DESCRIPTION		
JUSTIFICATION		

SECTION NUMBER	SECTION TITLE	CONFORMANCE? ☐ Yes ☐ No ☐ N/A
TYPE OF DEVIATION OR OPTION SELECTED ◆		
DESCRIPTION		
JUSTIFICATION		

SECTION NUMBER	SECTION TITLE	CONFORMANCE? ☐ Yes ☐ No ☐ N/A
TYPE OF DEVIATION OR OPTION SELECTED ◆		
DESCRIPTION		
JUSTIFICATION		

* For completeness list all sections of the standard and indicate whether conformance is met. If a section is not applicable (N/A) an explanation is needed under "justification." Some standards include options, so similar to deviations, the option chosen needs to be described and adequately justified as appropriate for the subject device. Explanation of all deviations or description of options selected when following a standard is required under "type of deviation or option selected," "description" and "justification" on the report. More than one page may be necessary.

◆ Types of deviations can include an exclusion of a section in the standard, a deviation brought out by the FDA supplemental information sheet (SIS), a deviation to adapt the standard to the device, or any adaptation of a section.

This section applies only to requirements of the Paperwork Reduction Act of 1995.

DO NOT SEND YOUR COMPLETED FORM TO THE PRA STAFF EMAIL ADDRESS BELOW.

The burden time for this collection of information is estimated to average 1 hour per response, including the time to review instructions, search existing data sources, gather and maintain the data needed and complete and review the collection of information. Send comments regarding this burden estimate or any other aspect of this information collection, including suggestions for reducing this burden, to:

Department of Health and Human Services
Food and Drug Administration
Office of Chief Information Officer
Paperwork Reduction Act (PRA) Staff
PRAStaff@fda.hhs.gov

"An agency may not conduct or sponsor, and a person is not required to respond to, a collection of information unless it displays a currently valid OMB control number."

Questions? Contact FDA/CDRH/OCE/DID at CDRH-FOISTATUS@fda.hhs.gov or 301-796-8118

Records Processed under FOIA request 2016-2167; Released by CDRH on 09/06/2016

Department of Health and Human Services
Food and Drug Administration

STANDARDS DATA REPORT FOR 510(k)s

(To be filled in by applicant)

This report and the Summary Report Table are to be completed by the applicant when submitting a 510(k) that references a national or international standard. A separate report is required for each standard referenced in the 510(k).

TYPE OF 510(K) SUBMISSION

☒ Traditional ☐ Special ☐ Abbreviated

STANDARD TITLE [1]

EN ISO 15004-2: Ophthalmic instruments – Fundamental requirements and test methods – Part 2: Light hazard protection

Please answer the following questions	Yes	No
Is this standard recognized by FDA [2]?	☒	☐
FDA Recognition number [3]	#10-51	
Was a third party laboratory responsible for testing conformity of the device to this standard identified in the 510(k)?	☒	☐
Is a summary report [4] describing the extent of conformance of the standard used included in the 510(k)? If no, complete a summary report table.	☒	☐
Does the test data for this device demonstrate conformity to the requirements of this standard as it pertains to this device?	☒	☐
Does this standard include acceptance criteria? If no, include the results of testing in the 510(k).	☒	☐
Does this standard include more than one option or selection of tests? If yes, report options selected in the summary report table.	☐	☒
Were there any deviations or adaptations made in the use of the standard?	☐	☒
If yes, were deviations in accordance with the FDA supplemental information sheet (SIS) [5]?	☐	☐
Were deviations or adaptations made beyond what is specified in the FDA SIS? If yes, report these deviations or adaptations in the summary report table.	☐	☒
Were there any exclusions from the standard? If yes, report these exclusions in the summary report table.	☐	☒
Is there an FDA guidance [6] that is associated with this standard?	☐	☒
If yes, was the guidance document followed in preparation of this 510k?	☐	☐

Title of guidance: _____

[1] The formatting convention for the title is: [SDO] [numeric identifier] [title of standard] [date of publication]

[2] Authority [21 U.S.C. 360d], http://www.fda.gov/MedicalDevices/DeviceRegulationandGuidance/Standards/default.htm

[3] http://www.accessdata.fda.gov/scripts/cdrh/cfdocs/cfStandards/search.cfm

[4] The summary report should include: any adaptations used to adapt to the device under review (for example, alternative test methods); choices made when options or a selection of methods are described; deviations from the standard; requirements not applicable to the device; and the name and address of the test laboratory or certification body involved in conformance assessment to this standard. The summary report includes information on all standards utilized during the development of the device.

[5] The supplemental information sheet (SIS) is additional information which is necessary before FDA recognizes the standard. Found at http://www.accessdata.fda.gov/scripts/cdrh/cfdocs/cfStandards/search.cfm

[6] The online search for CDRH Guidance Documents can be found at http://www.fda.gov/MedicalDevices/DeviceRegulationandGuidance/GuidanceDocuments/default.htm

Questions? Contact FDA/CDRH/OCE/DID at CDRH-FOISTATUS@fda.hhs.gov or 301-796-8118

Records Processed under FOIA request 2016-2167; Released by CDRH on 09/06/2016

EXTENT OF STANDARD CONFORMANCE SUMMARY REPORT TABLE

STANDARD TITLE
EN ISO 15004-2: Ophthalmic instruments – Fundamental requirements and test methods – Part 2: Light hazard protection

CONFORMANCE WITH STANDARD SECTIONS*

SECTION NUMBER	SECTION TITLE	CONFORMANCE? ☐ Yes ☐ No ☐ N/A
TYPE OF DEVIATION OR OPTION SELECTED ◆		
DESCRIPTION		
JUSTIFICATION		

SECTION NUMBER	SECTION TITLE	CONFORMANCE? ☐ Yes ☐ No ☐ N/A
TYPE OF DEVIATION OR OPTION SELECTED ◆		
DESCRIPTION		
JUSTIFICATION		

SECTION NUMBER	SECTION TITLE	CONFORMANCE? ☐ Yes ☐ No ☐ N/A
TYPE OF DEVIATION OR OPTION SELECTED ◆		
DESCRIPTION		
JUSTIFICATION		

* For completeness list all sections of the standard and indicate whether conformance is met. If a section is not applicable (N/A) an explanation is needed under "justification." Some standards include options, so similar to deviations, the option chosen needs to be described and adequately justified as appropriate for the subject device. Explanation of all deviations or description of options selected when following a standard is required under "type of deviation or option selected," "description" and "justification" on the report. More than one page may be necessary.

◆ Types of deviations can include an exclusion of a section in the standard, a deviation brought out by the FDA supplemental information sheet (SIS), a deviation to adapt the standard to the device, or any adaptation of a section.

This section applies only to requirements of the Paperwork Reduction Act of 1995.

DO NOT SEND YOUR COMPLETED FORM TO THE PRA STAFF EMAIL ADDRESS BELOW.

The burden time for this collection of information is estimated to average 1 hour per response, including the time to review instructions, search existing data sources, gather and maintain the data needed and complete and review the collection of information. Send comments regarding this burden estimate or any other aspect of this information collection, including suggestions for reducing this burden, to:

Department of Health and Human Services
Food and Drug Administration
Office of Chief Information Officer
Paperwork Reduction Act (PRA) Staff
PRAStaff@fda.hhs.gov

"An agency may not conduct or sponsor, and a person is not required to respond to, a collection of information unless it displays a currently valid OMB control number."

Questions? Contact FDA/CDRH/OCE/DID at CDRH-FOISTATUS@fda.hhs.gov or 301-796-8118

Records Processed under FOIA request 2016-2167; Released by CDRH on 09/06/2016

Department of Health and Human Services
Food and Drug Administration

STANDARDS DATA REPORT FOR 510(k)s

(To be filled in by applicant)

This report and the Summary Report Table are to be completed by the applicant when submitting a 510(k) that references a national or international standard. A separate report is required for each standard referenced in the 510(k).

TYPE OF 510(K) SUBMISSION

☒ Traditional ☐ Special ☐ Abbreviated

STANDARD TITLE [1]

IEC 60825-1: Safety of laser products Part 1: Equipment classification, requirements and user's guide Section two: Manufacturing requirements

Please answer the following questions	Yes	No
Is this standard recognized by FDA [2]?	☒	☐
FDA Recognition number [3]	#12-273	
Was a third party laboratory responsible for testing conformity of the device to this standard identified in the 510(k)?	☒	☐
Is a summary report [4] describing the extent of conformance of the standard used included in the 510(k)? If no, complete a summary report table.	☒	☐
Does the test data for this device demonstrate conformity to the requirements of this standard as it pertains to this device?	☒	☐
Does this standard include acceptance criteria? If no, include the results of testing in the 510(k).	☒	☐
Does this standard include more than one option or selection of tests? If yes, report options selected in the summary report table.	☐	☒
Were there any deviations or adaptations made in the use of the standard?	☐	☒
If yes, were deviations in accordance with the FDA supplemental information sheet (SIS) [5]?	☐	☐
Were deviations or adaptations made beyond what is specified in the FDA SIS? If yes, report these deviations or adaptations in the summary report table.	☐	☒
Were there any exclusions from the standard? If yes, report these exclusions in the summary report table.	☐	☒
Is there an FDA guidance [6] that is associated with this standard?	☐	☒
If yes, was the guidance document followed in preparation of this 510k?	☐	☐

Title of guidance: _____

[1] The formatting convention for the title is: [SDO] [numeric identifier] [title of standard] [date of publication]

[2] Authority [21 U.S.C. 360d], http://www.fda.gov/MedicalDevices/DeviceRegulationandGuidance/Standards/default.htm

[3] http://www.accessdata.fda.gov/scripts/cdrh/cfdocs/cfStandards/search.cfm

[4] The summary report should include: any adaptations used to adapt to the device under review (for example, alternative test methods); choices made when options or a selection of methods are described; deviations from the standard; requirements not applicable to the device; and the name and address of the test laboratory or certification body involved in conformance assessment to this standard. The summary report includes information on all standards utilized during the development of the device.

[5] The supplemental information sheet (SIS) is additional information which is necessary before FDA recognizes the standard. Found at http://www.accessdata.fda.gov/scripts/cdrh/cfdocs/cfStandards/search.cfm

[6] The online search for CDRH Guidance Documents can be found at http://www.fda.gov/MedicalDevices/DeviceRegulationandGuidance/GuidanceDocuments/default.htm

Questions? Contact FDA/CDRH/OCE/DID at CDRH-FOISTATUS@fda.hhs.gov or 301-796-8118

Records Processed under FOIA request 2016-2167; Released by CDRH on 09/06/2016

EXTENT OF STANDARD CONFORMANCE SUMMARY REPORT TABLE

STANDARD TITLE
IEC 60825-1: Safety of laser products Part 1: Equipment classification, requirements and user's guide Section two: Manufacturing requirements

CONFORMANCE WITH STANDARD SECTIONS*

SECTION NUMBER	SECTION TITLE	CONFORMANCE? ☐ Yes ☐ No ☐ N/A
TYPE OF DEVIATION OR OPTION SELECTED ◆		
DESCRIPTION		
JUSTIFICATION		

SECTION NUMBER	SECTION TITLE	CONFORMANCE? ☐ Yes ☐ No ☐ N/A
TYPE OF DEVIATION OR OPTION SELECTED ◆		
DESCRIPTION		
JUSTIFICATION		

SECTION NUMBER	SECTION TITLE	CONFORMANCE? ☐ Yes ☐ No ☐ N/A
TYPE OF DEVIATION OR OPTION SELECTED ◆		
DESCRIPTION		
JUSTIFICATION		

* For completeness list all sections of the standard and indicate whether conformance is met. If a section is not applicable (N/A) an explanation is needed under "justification." Some standards include options, so similar to deviations, the option chosen needs to be described and adequately justified as appropriate for the subject device. Explanation of all deviations or description of options selected when following a standard is required under "type of deviation or option selected," "description" and "justification" on the report. More than one page may be necessary.

◆ Types of deviations can include an exclusion of a section in the standard, a deviation brought out by the FDA supplemental information sheet (SIS), a deviation to adapt the standard to the device, or any adaptation of a section.

This section applies only to requirements of the Paperwork Reduction Act of 1995.

DO NOT SEND YOUR COMPLETED FORM TO THE PRA STAFF EMAIL ADDRESS BELOW.

The burden time for this collection of information is estimated to average 1 hour per response, including the time to review instructions, search existing data sources, gather and maintain the data needed and complete and review the collection of information. Send comments regarding this burden estimate or any other aspect of this information collection, including suggestions for reducing this burden, to:

Department of Health and Human Services
Food and Drug Administration
Office of Chief Information Officer
Paperwork Reduction Act (PRA) Staff
PRAStaff@fda.hhs.gov

"An agency may not conduct or sponsor, and a person is not required to respond to, a collection of information unless it displays a currently valid OMB control number."

Questions? Contact FDA/CDRH/OCE/DID at CDRH-FOISTATUS@fda.hhs.gov or 301-796-8118

Records Processed under FOIA request 2016-2167; Released by CDRH on 09/06/2016

Department of Health and Human Services
Food and Drug Administration

STANDARDS DATA REPORT FOR 510(k)s

(To be filled in by applicant)

This report and the Summary Report Table are to be completed by the applicant when submitting a 510(k) that references a national or international standard. A separate report is required for each standard referenced in the 510(k).

TYPE OF 510(K) SUBMISSION

☒ Traditional ☐ Special ☐ Abbreviated

STANDARD TITLE [1]

ISO 22665: Ophthalmic optics and instruments – instruments to measure axial distances in the eye

Please answer the following questions	Yes	No
Is this standard recognized by FDA [2]?	☐	☒
FDA Recognition number [3] # _____		
Was a third party laboratory responsible for testing conformity of the device to this standard identified in the 510(k)?	☐	☒
Is a summary report [4] describing the extent of conformance of the standard used included in the 510(k)? If no, complete a summary report table.	☒	☐
Does the test data for this device demonstrate conformity to the requirements of this standard as it pertains to this device?	☒	☐
Does this standard include acceptance criteria? If no, include the results of testing in the 510(k).	☒	☐
Does this standard include more than one option or selection of tests? If yes, report options selected in the summary report table.	☐	☒
Were there any deviations or adaptations made in the use of the standard?	☐	☒
If yes, were deviations in accordance with the FDA supplemental information sheet (SIS) [5]?	☐	☐
Were deviations or adaptations made beyond what is specified in the FDA SIS? If yes, report these deviations or adaptations in the summary report table.	☐	☒
Were there any exclusions from the standard? If yes, report these exclusions in the summary report table.	☐	☒
Is there an FDA guidance [6] that is associated with this standard?	☐	☒
If yes, was the guidance document followed in preparation of this 510k?	☐	☐

Title of guidance: _____

[1] The formatting convention for the title is: [SDO] [numeric identifier] [title of standard] [date of publication]

[2] Authority [21 U.S.C. 360d], http://www.fda.gov/MedicalDevices/DeviceRegulationandGuidance/Standards/default.htm

[3] http://www.accessdata.fda.gov/scripts/cdrh/cfdocs/cfStandards/search.cfm

[4] The summary report should include: any adaptations used to adapt to the device under review (for example, alternative test methods); choices made when options or a selection of methods are described; deviations from the standard; requirements not applicable to the device; and the name and address of the test laboratory or certification body involved in conformance assessment to this standard. The summary report includes information on all standards utilized during the development of the device.

[5] The supplemental information sheet (SIS) is additional information which is necessary before FDA recognizes the standard. Found at http://www.accessdata.fda.gov/scripts/cdrh/cfdocs/cfStandards/search.cfm

[6] The online search for CDRH Guidance Documents can be found at http://www.fda.gov/MedicalDevices/DeviceRegulationandGuidance/GuidanceDocuments/default.htm

Questions? Contact FDA/CDRH/OCE/DID at CDRH-FOISTATUS@fda.hhs.gov or 301-796-8118

Records Processed under FOIA request 2016-2167; Released by CDRH on 09/06/2016

EXTENT OF STANDARD CONFORMANCE SUMMARY REPORT TABLE

STANDARD TITLE
ISO 22665: Ophthalmic optics and instruments – instruments to measure axial distances in the eye

CONFORMANCE WITH STANDARD SECTIONS*

SECTION NUMBER	SECTION TITLE	CONFORMANCE? ☐ Yes ☐ No ☐ N/A
TYPE OF DEVIATION OR OPTION SELECTED ◆		
DESCRIPTION		
JUSTIFICATION		

SECTION NUMBER	SECTION TITLE	CONFORMANCE? ☐ Yes ☐ No ☐ N/A
TYPE OF DEVIATION OR OPTION SELECTED ◆		
DESCRIPTION		
JUSTIFICATION		

SECTION NUMBER	SECTION TITLE	CONFORMANCE? ☐ Yes ☐ No ☐ N/A
TYPE OF DEVIATION OR OPTION SELECTED ◆		
DESCRIPTION		
JUSTIFICATION		

* For completeness list all sections of the standard and indicate whether conformance is met. If a section is not applicable (N/A) an explanation is needed under "justification." Some standards include options, so similar to deviations, the option chosen needs to be described and adequately justified as appropriate for the subject device. Explanation of all deviations or description of options selected when following a standard is required under "type of deviation or option selected," "description" and "justification" on the report. More than one page may be necessary.

◆ Types of deviations can include an exclusion of a section in the standard, a deviation brought out by the FDA supplemental information sheet (SIS), a deviation to adapt the standard to the device, or any adaptation of a section.

This section applies only to requirements of the Paperwork Reduction Act of 1995.

DO NOT SEND YOUR COMPLETED FORM TO THE PRA STAFF EMAIL ADDRESS BELOW.

The burden time for this collection of information is estimated to average 1 hour per response, including the time to review instructions, search existing data sources, gather and maintain the data needed and complete and review the collection of information. Send comments regarding this burden estimate or any other aspect of this information collection, including suggestions for reducing this burden, to:

Department of Health and Human Services
Food and Drug Administration
Office of Chief Information Officer
Paperwork Reduction Act (PRA) Staff
PRAStaff@fda.hhs.gov

"An agency may not conduct or sponsor, and a person is not required to respond to, a collection of information unless it displays a currently valid OMB control number."

Questions? Contact FDA/CDRH/OCE/DID at CDRH-FOISTATUS@fda.hhs.gov or 301-796-8118

Records Processed under FOIA request 2016-2167; Released by CDRH on 09/06/2016

Attachment 2

Labeling

Questions? Contact FDA/CDRH/OCE/DID at CDRH-FOISTATUS@fda.hhs.gov or 301-796-8118

Records Processed under FOIA request 2016-2167; Released by CDRH on 09/06/2016

OCULUS | Pentacam® AXL

INSTRUCTION MANUAL

System for measuring and analysing the front part of the eye

OCULUS®

Questions? Contact FDA/CDRH/OCE/DID at CDRH-FOISTATUS@fda.hhs.gov or 301-796-8118

Records Processed under FOIA request 2016-2167; Released by CDRH on 09/06/2016

Notes on this instruction manual

The Pentacam® AXL has been manufactured and tested according to strict quality criteria.

To ensure safe operation, it is essential that you use the device correctly. For this reason you should familiarise yourself thoroughly with the contents of this instruction manual before operating the device. In particular, pay attention to the safety instructions.

- This instruction manual describes how to manage patient data, the default settings of the Pentacam® program and the measuring process.
- The Pentacam® AXL reference manual contains information supplementing the description of the operating concept.

Due to ongoing development, the diagrams shown may depict minor changes to the actual device delivered.

If you have any queries or would like additional information about your device, do not hesitate to call or send us an email or a fax. Our service team will gladly assist.

OCULUS Optikgeräte GmbH

OCULUS is certified according to DIN EN ISO 13485, setting high standards of quality where development, manufacture, quality assurance and service regarding the entire range of products are concerned.

Questions? Contact FDA/CDRH/OCE/DID at CDRH-FOISTATUS@fda.hhs.gov or (301) 796-8118

Records Processed under FOIA request 2016-2167; Released by CDRH on 09/06/2016

Table of Contents

1 Delivery and Deliverables 1
1.1 Software Version 2
2 Graphic Symbols on the Equipment 3
3 Structure of the Documentation 4
4 Safety Instructions 5
4.1 About this Manual 5
4.1.1 Pictograms Used in this Manual 5
4.2 Safety Instructions for Use 6
5 Intended Use 12
6 Device Description 13
6.1 How the Pentacam® AXL works 14
7 Setup and Connection 15
7.1 Electrical Connection 16
7.2 Switching On 17
7.3 Switching Off 17
7.4 Software Installation on separate PCs 17
8 Patient Data Management 18
8.1 Starting Patient Data Management 18
8.1.1 Entering a New Patient 19
8.1.2 Selecting an Existing Patient 19
8.2 Starting the Pentacam® AXL Software 20
9 Pentacam® AXL Program 21
10 Scan Menu 23
10.1 Screen layout 23
10.1.1 Scheimpflug image settings 24
10.2 Information for recording Scheimpflug images with a Pentacam® AXL 27
11 Measuring Procedure 28
12 Quality Specifications 33
13 Managing Patient Data 36
13.1 Rename Patient Data 36
13.2 Exporting Patient Data 36
13.3 Importing Patient Data 38
13.4 Data Backup 39
13.4.1 Backup Data 40
13.4.2 Reconstructing Data 40
13.4.3 Automatic Backup 41
14 Test measurements with the Pentacam 42

Questions? Contact FDA/CDRH/OCE/DID at CDRH-FOISTATUS@fda.hhs.gov or 301-796-8118

Records Processed under FOIA request 2016-2167; Released by CDRH on 09/06/2016

15 Cleaning, Disinfection and Maintenance 43
15.1 Cleaning 43
15.2 Disinfection 44
15.3 Maintenance 45
15.4 Attaching Paper to the Chin Rest 46
16 Troubleshooting 47
17 Transport and Storage 48
17.1 Information on Transport and Storage 48
17.2 Disassembly 48
17.3 Transport and Storage 49
18 Disposal 50
19 Terms of Warranty and Servicing 50
19.1 Terms of Warranty 50
19.2 Assumption of Liability for Functions and Damage 51
19.3 Manufacturer and Service Address 51
20 Declaration of Conformity 52
21 Technical Data 53
22 Annex 56
22.1 Electromagnetic Compatibility 56
22.2 Guidance and Manufacturer's Declaration - Electromagnetic Emmisssions for the Pentacam® AXL 57
22.3 Description of the Connection 61
22.4 Data Sheet HEMG 49-S240210-7 (05150150) 62

iii / iii Questions? Contact FDA/CDRH/OCE/DID at CDRH-FOISTATUS@fda.hhs.gov or 301-796-8118

Records Processed under FOIA request 2016-2167; Released by CDRH on 09/06/2016.

1 Delivery and Deliverables

Component	Order number
Pentacam®	70100
Pentacam® accessories	70701
■ x-y base	-
■ Power supply	05150150
■ Dark sheet	027070000006
■ Washing manual	027070000007
■ Wire clip	027075000004
■ Hexagon screwdriver	05520010
Additional Export package with head- and chinrest	70734
■ Support plate	017051501012
■ Cograil	027051701004
■ Cover	027051701005
■ Sliding plate	017051701006
■ Chinrest paper	65313
■ Head and chin rest	70518
■ Instruction Manual	G / 70100 / xxxx/en
■ User Guide	UG / 70700 / xxxx/ en
■ Software Installation	SI/50000/xxxx/en
Additional accessories:	
■ Dustcover	026010005001
■ Y-cable 2 m	027700000052
■ Y-cable2 m	027700000054
■ Y-cable 2 m	027700000056
■ Stromkabel	
■ Cable	

Software-Modul	Bestellnummer
Standard software package Pentacam®:	
■ Floating License Key	77900
with manual	SI/77900/.../de
■ Viewing License Pentacam®	-
■ Indice report software modul	-
■ Pentacam® Data-USB-Stick	

Questions? Contact FDA/CDRH/OCE/DID at CDRH-FOISTATUS@fda.hhs.gov or 301-796-8118

Records Processed under FOIA request 2016-2167; Released by CDRH on 09/06/2016

Optional software module	Order number
Contactlens Software Modul	
Phake IOL Simulation Softwaremodul	
Modul Belin/Ambrosio Enhanced Ectasia	
Holladay Report and EKR detail report	
Module DICOM PACS	
Software Package Cataract ■ Catarakt Software ■ Software licensez PNS and 3D lens ■ Modul Zernike Display	
Refractive Software Package ■ Refractive Software ■ Corneal Densitometry Software modul	

We reserve the right to change the scope of delivery in line with ongoing technical development.

➔ If you find transport damage upon delivery, immediately file a claim with the transport company.

➔ Have the damages noted on the bill of lading, so that your claim for damages can be handled properly.

For more information regarding shipping and handling, see *sect. 17, page 48*.

1.1 Software Version

- Patient data management: version 6.07
- Pentacam® AXL software: version V1.20b15

- The software version of the patient data management appears in the settings of the patient data management software.
- The 4software v4ersion of the Pentacam® AXL program appears in the Pentacam® settings.

Questions? Contact FDA/CDRH/OCE/DID at CDRH-FOISTATUS@fda.hhs.gov or 301-796-8118

Records Processed under FOIA request 2016-2167; Released by CDRH on 09/06/2016

2 Graphic Symbols on the Equipment

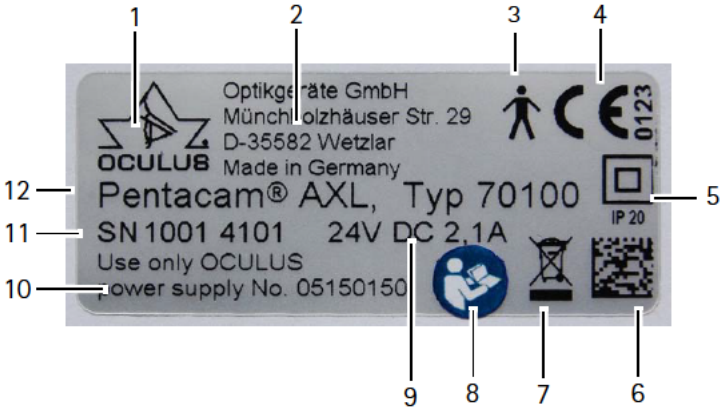

1	*Company logo*	7	*Disposal in household trash is prohibited*
2	*Company address*	8	*Heed Instructions Manual*
3	*Type B unit*	9	*Power supply voltage*
4	*CE Conformité Européenne*	10	*Power supply no*
5	*Protection class and degree of protection*	11	*Serial number of the device*
6	*Matrix for device identification*	12	*Device name and device number*

Fig. 2-1: Symbols

Graphic symbols on packaging

keep dry

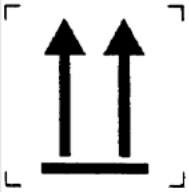
this way up

fragile

Transport

permitted temperature range: transport

Storage

permitted temperature range: storage

Questions? Contact FDA/CDRH/OCE/DID at CDRH-FOISTATUS@fda.hhs.gov or 301-796-8118

Records Processed under FOIA request 2016-2167; Released by CDRH on 09/06/2016

3 Structure of the Documentation

A folder containing documentation is supplied with your Pentacam® AXL:

- **Instruction Manual:** The design of the unit is described in detail in this document. The instruction manual also gives you general information about working with the Patient Data Management system and all safety-related instructions for use of the Pentacam® AXL.

Attention

All safety-related instructions for use of the Pentacam® AXL are given in the Instruction Manual for the unit. It is imperative that you read and understand the whole Instruction Manual before you use the Pentacam® AXL.

- **User Guide:** All features of the examination and analysis software are described in the User Guide, along with detailed information about the Patient Data Management system.
- **Software Installation:** The introduction to the Software Installation describes how to install the Pentacam® AXL software and the associated drivers.
- Manual Floating License Key: information on the use of the Pentacam® AXL within networks.

Questions? Contact FDA/CDRH/OCE/DID at CDRH-FOISTATUS@fda.hhs.gov or 301-796-8118

Records Processed under FOIA request 2016-2167; Released by CDRH on 09/06/2016

4 Safety Instructions

4.1 About this Manual

- ➔ Carefully read through the Instruction Manual.
- ➔ Keep the Instruction Manual in good condition near the device.
- ➔ Observe the legal regulations with regard to accident prevention.

4.1.1 Pictograms Used in this Manual

Attention

Identifies a potentially dangerous situation which may cause minor injury or damage to property.

Note

Denotes situations which could result in incorrect findings, denotes user instructions and useful or other important information.

Identifies important information about the product and its use which require special attention.

> This symbol denotes menu paths and screen shots. Example for starting a new examination:
>
> Pentacam® AXL > Examination > Scan
>
> which means:
>
> - ➔ Select the "Examination" menu from the menu bar.
> - ➔ Select the menu item "Scan".

Questions? Contact FDA/CDRH/OCE/DID at CDRH-FOISTATUS@fda.hhs.gov or 301-796-8118

Records Processed under FOIA request 2016-2167; Released by CDRH on 09/06/2016

4.2 Safety Instructions for Use

Attention

Personal injury or property damage due to improper operation

➔ Observe the following safety instructions.

Personal injury or property damage due to equipment modifications that could jeopardize safety

➔ No modifications may be made to this device without the permission of the manufacturer. Only the OCULUS service and authorized dealers are allowed to modify the device or the associated lifting table.

Instructions for Operating Personnel

➔ Make certain that the Pentacam® AXL is used exclusively in clinics and by eye specialists and opticians. It must be used in the area designated for carrying out examinations.

For this reason the device may only be operated by personnel instructed to do so, who, with appropriate training, knowledge and practical experience, are able to ensure proper handling of the device.

Transport and Storage Instructions

Refer to the notes in *sect. 17, page 48*.

Instructions for Setup and Connection

➔ Only OCULUS or an authorized dealer is allowed to set up and to connect the Pentacam® AXL.

➔ Do not use or store the Pentacam® AXL in rooms that are humid, see *sect. 17, page 48*.

➔ Keep the Pentacam® AXL away from water that may drip, splash or spray on it, and make sure that no liquids can get into the Pentacam® AXL. Do not place any containers holding liquids in the vicinity of the Pentacam® AXL.

➔ Germany: Only operate the Pentacam® AXL in rooms used for medical purposes after they have been set up according to the VDE Regulation 0100-710.

➔ Do not operate the devices included in the delivery in areas where explosions may occur, or in proximity to flammable anesthetics or volatile substances such as alcohol, benzine or similar products.

➔ Set up the Pentacam® AXL so that the power plug is easy to access. That way, you can easily disconnect it from the power supply for any repairs or maintenance work.

Questions? Contact FDA/CDRH/OCE/DID at CDRH-FOISTATUS@fda.hhs.gov or (301) 796-8108

Records Processed under FOIA request 2016-2167; Released by CDRH on 09/06/2016

- Do not force any plug connections.
  If you are unable to make a plug connection, check whether the plug fits the socket.
  If you detect damage to the connection, you should let authorized dealer repair the damage.
- Only use a device which is mounted at the lifting table properly.

Patient environment information

Patient environment is the area where patients can come into contact with any part of a medical electrical equipment (ME equipment) or with another person being in contact with the ME equipment.

Questions? Contact FDA/CDRH/OCE/DID at CDRH-FOISTATUS@fda.hhs.gov or 301-796-8118

Records Processed under FOIA request 2016-2167; Released by CDRH on 09/06/2016

In the patient environment, use devices that conform to IEC 60601-1. If a multiple power socket is to be used, or if a device is to be used that does not meet the IEC 60601-1 standard, use an isolating transformer.

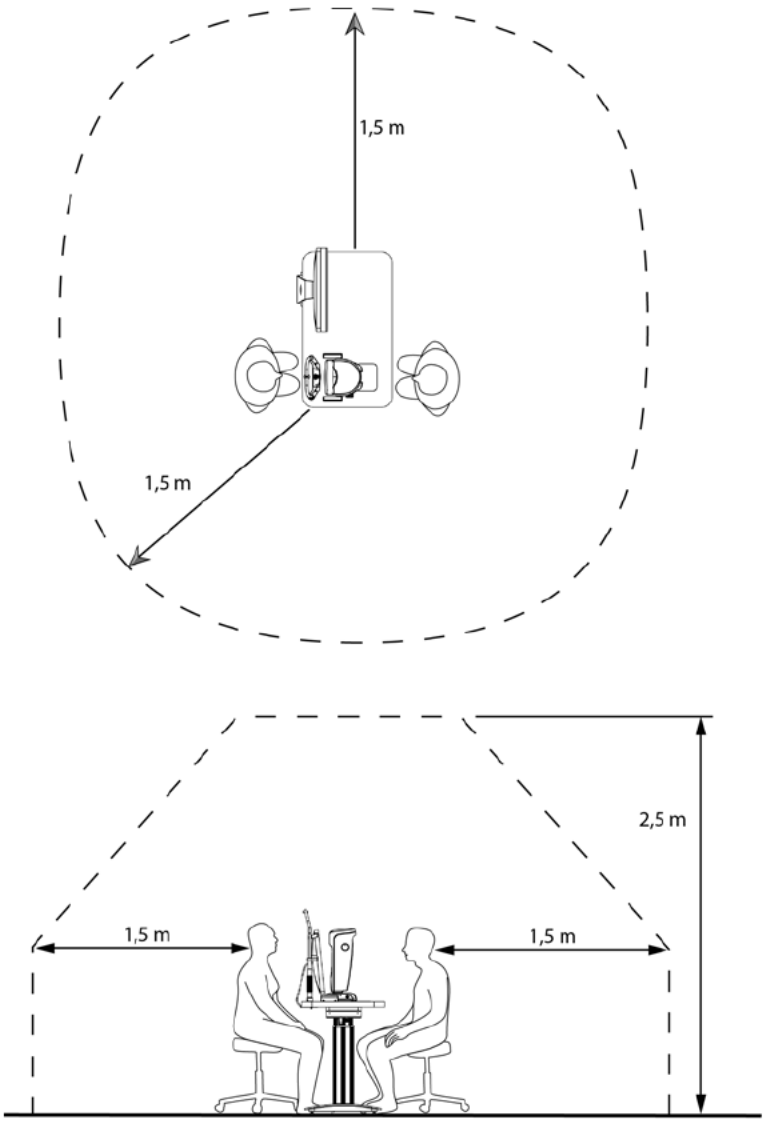

Fig. 4-1: Patient environment

Information about the operation of an ME system

The Pentacam® AXL and a connected computer form a medical electrical system (ME system) according to DIN EN 60601-1. If you connect additional devices, such as, for example a printer, those devices become part of the ME system.

➔ Make sure that all devices of the ME system meet the requirements of IEC 60601-1 or IEC 60950-1.

Questions? Contact FDA/CDRH/OCE/DID at CDRH-FOISTATUS@fda.hhs.gov or 301-796-8108

Records Processed under FOIA request 2016-2167; Released by CDRH on 09/06/2016

Instructions for Operation

- Before first use: Let OCULUS or an authorized dealer train you in the operation of the Pentacam® AXL.
- Never operate a damaged Pentacam® AXL.
- Only operate the Pentacam® AXL with the original accessories supplied by us and only when the unit is in technically perfect condition.
- Do not cover the ventilation openings.
- Do not touch the patient and the device at the same time.
- Make sure that the device cannot tip over by leaning against it or sitting on it.
- Only operate the device if you have understood the operating instructions.

Instructions for Maintenance

Caution

Risk of personal injury or material damage due to invisible laser radiation

The Pentacam® AXL contains a Class 1 laser according to IEC 60825-1: 2007. It is an encapsulated laser system. When the Pentacam® AXL cover is opened, you may be exposed to invisible, Class 3R (5 mW) laser radiation.

- Never open the unit.
- For authorized service personnel only: When doing maintenance jobs, avoid looking directly into the laser beam.

To ensure satisfactory and reliable operation, we strongly recommend that you have the Pentacam® AXL checked every two years by our service department or an authorized dealer, see *sect. 15.3, page 45*. If an error occurs which you cannot correct, label the Pentacam® AXL as being "out-of-order" and contact our service department, see *sect. 19, page 50*.

Instructions for Disassembly and Disposal

- When disconnecting electrical connections, pull on the respective plug and not on the cable itself.
- Dispose of the device according to legal regulations.

Questions? Contact FDA/CDRH/OCE/DID at CDRH-FOISTATUS@fda.hhs.gov or 301-796-8118

Records Processed under FOIA request 2016-2167; Released by CDRH on 09/06/2016

Instructions on Electrical Safety

Attention

Risk of personal injury or damage to property due to an incorrect level of safety

Connecting the Pentacam® AXL with its non-medical electrical equipment (e.g. data processing equipment) to a medical electrical system must not result in a patient safety level below that prescribed by DIN EN ISO 60601-1. If making this connection leads to the leakage current threshold being exceeded, protective measures including a circuit breaker must be in place.

- ➔ Ensure that connections with non-medical devices are made correctly.
- ➔ Only use the power adapter listed in the packing list.
- ➔ Use only a computer that meets the specifications given in this instruction manual, *sect. 22, page 56*.

Use of a multiple socket extension cord

Risk of personal injury or material damage caused by unsafe multiple socket extension cord

If you use a multiple socket extension cord to connect the Pentacam® AXL to the power supply, you must heed the following information:

- ➔ Use an extension cord that complies with the requirements of DIN EN ISO 60601-1: 20005, section 16.
- ➔ Do not place the multiple socket extension cord on the floor.
- ➔ Do not use more than one multiple socket extension cord.
- ➔ Plug only the Pentacam® AXL and the computer that is being used with the unit (if applicable) into the multiple socket extension cord.

If you are using a multiple socket extension chord it has to be supplied with a isolation transformer.

If you are using a new computer for the Pentacam® AXL, you must have the electrical safety checked. Call OCULUS Service for this purpose.

Questions? Contact FDA/CDRH/OCE/DID at CDRH-FOISTATUS@fda.hhs.gov or 301-796-8118

Records Processed under FOIA request 2016-2167; Released by CDRH on 09/06/2016

Attention

Electromagnetic Compatibility (EMC) / Cables

Risk of personal injury or damage to property due to electromagnetic interference

Portable and mobile RF communications equipment can affect medical electrical equipment *sect. 22, page 56*.

- ➔ Make sure that portable and mobile RF communications equipment do not cause interference.
- ➔ Recommendation: Maintain a minimum distance of 4 m. If the distance is shorter, you must ensure that the Pentacam® AXL functions correctly.

Questions? Contact FDA/CDRH/OCE/DID at CDRH-FOISTATUS@fda.hhs.gov or 301-796-8118

Records Processed under FOIA request 2016-2167; Released by CDRH on 09/06/2016

5 Intended Use

Attention

For the USA-Market only: Federal law restricts this device to sale by or on the order of a physician, or with the descriptive designation of any other practioner licensed by the law of the State in which he practices to use or order the use of this device.

The OCULUS Pentacam® AXL is designed to take photos of the anterior segment of the eye which includes the cornea, pupil, anterior chamber and lens of the eye. To evaluate:

- corneal shape,
- analyse condition of the lens (opaque crystalline lens),
- analyse the anterior chamber angle,
- analyse anterior chamber depth,
- analyse the volume of the anterior chamber,
- analyse anterior or posterior cortical opacity,
- analyse the location of cataracts (nuclear, subcapsular and or cortical), using cross slit images with densitometry,
- corneal thickness.
- axial length
- white-to-white distance

The OCULUS Pentacam® AXL also performs calculations to assist physicians in determining the power of the intraocular lens for implantation.

Make certain that the Pentacam® AXL is used exclusively in clinics and by eye specialists and opticians. It must be used in the area designated for carrying out examinations.

The Pentacam® AXL may only be used for the purpose described in this instruction manual.

➔ Heed the safety instructions listed above.

Contraindication

not known

Questions? Contact FDA/CDRH/OCE/DID at CDRH-FOISTATUS@fda.hhs.gov or 301-796-8108

Records Processed under FOIA request 2016-2167; Released by CDRH on 09/06/2016

6 Device Description

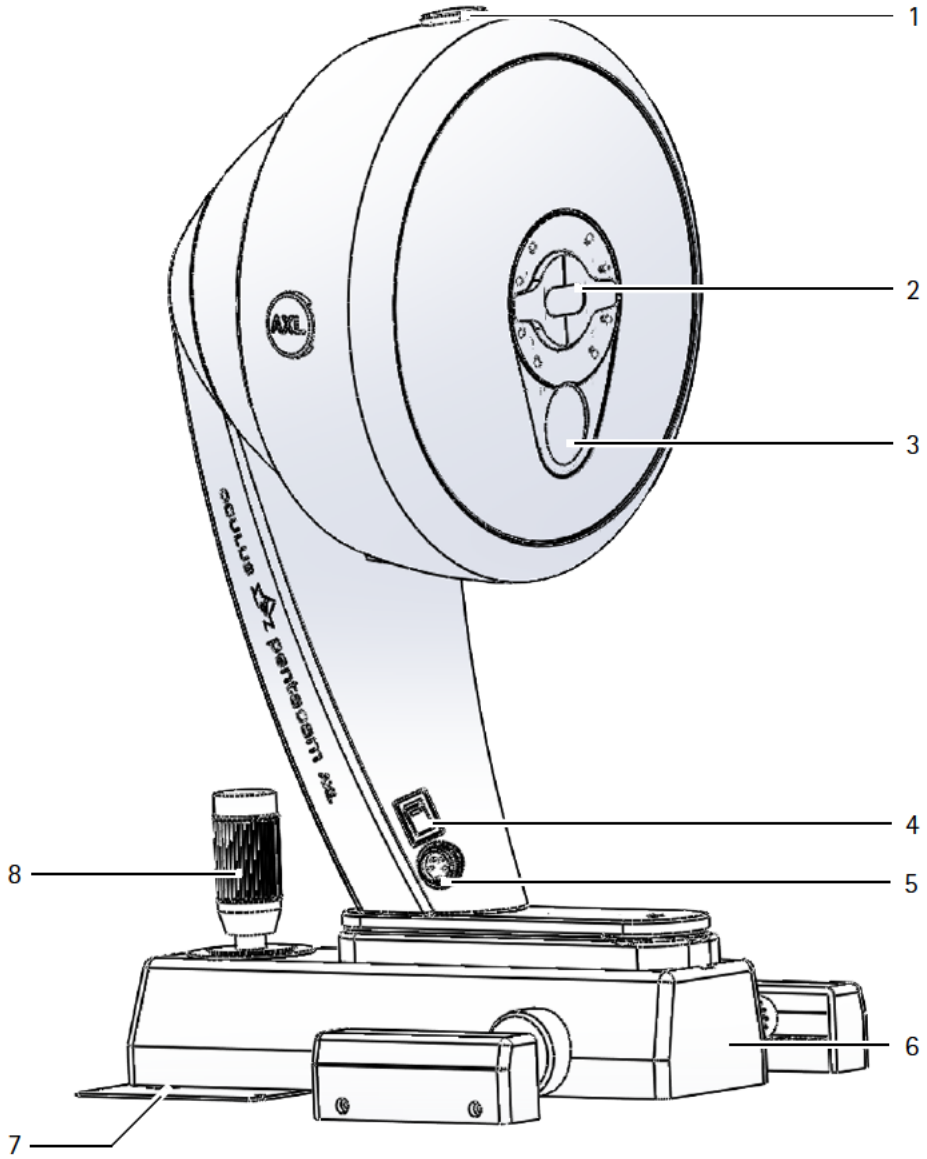

1 Ventilation opening
2 Measuring window
3 Camera opening
4 On/off switch with indicator light
5 Y-cable connector
6 Cross slide
7 Sliding plate with circular markings
8 Joystick

Fig. 6-1: Device components

Questions? Contact FDA/CDRH/OCE/DID at CDRH-FOISTATUS@fda.hhs.gov or 301-796-8118

Records Processed under FOIA request 2016-2167; Released by CDRH on 09/06/2016

6.1 How the Pentacam® AXL works

While rotating around the eye, the Pentacam® AXL captures Scheimpflug images of the anterior eye segment through varying axes. The Scheimpflug images created during an examination are transmitted to the connected PC.

The axial length of the eye is measured by interferometry.

Scheimpflug images can be captured within maximum two seconds.

Up to 138,000 genuine height values are measured and analysed from the Scheimpflug images.

The Scheimpflug images are the basis for the height data which are used to calculate a mathematical 3D model of the anterior eye segment. At same time any eye movements are recorded and taken into account.

A quality specification (QS) lets you gauge the quality of the measurement taken.

The mathematical 3D model, corrected for eye movements, provides the basis for all subsequent analysis.

The topography of the front and rear surfaces of the cornea and the pachymetry are calculated and displayed from limbus to limbus for the entire surface of the cornea.

An analysis of the anterior chamber provides the basis for calculating the chamber angle, chamber volume and chamber depth.

Densitometry of the cornea and lens automatically produces quantified values.

Colour images displayed on the screen show the results of the measurement.

A rotatable 3D model displays the front and rear surfaces of the cornea, the iris and the lens.

Attention

OCULUS Optikgeräte GmbH shall not be liable in any form for further use of the data recorded by a Pentacam® and for the evaluations it has calculated.

Questions? Contact FDA/CDRH/OCE/DID at CDRH-FOISTATUS@fda.hhs.gov or 301-796-8108

Records Processed under FOIA request 2016-2167; Released by CDRH on 09/06/2016

7 Setup and Connection

Attention

Risk of incorrect measurements/equipment damage due to improper setup

➔ Before first use, make sure the installation and connection of the Pentacam® AXL are completed by our service or by a professional authorized by OCULUS.

Note

➔ Do not expose the Pentacam® AXL to any vibrations, shocks, contaminants, moisture, or high temperatures.

➔ Handle the optical device with care.

➔ Set up the Pentacam® AXL so that the power plug is easy to access. That way, you can easily disconnect it from the power supply for any repairs or maintenance work.

➔ Place the device so that direct light cannot affect the measurement.

➔ Make sure the examination is free from light reflections. To achieve this, darken the examination room.

Ambient temperature

The ambient conditions for operation are given in *sect. 21, page 53*.

➔ Before installing the Pentacam® AXL, consider the transport, storage and current room temperature, where the device is to be installed.

The difference between the temperature of the installation room and the storage and transport temperature should not be more than 10°C to avoid fogging of the internal optics.

➔ If the difference in temperature is greater than 10° C, leave the system at least for 6 hours until the temperature of the instrument has adapted to room temperature.

Questions? Contact FDA/CDRH/OCE/DID at CDRH-FOISTATUS@fda.hhs.gov or 301-796-8118

Records Processed under FOIA request 2016-2167; Released by CDRH on 09/06/2016

7.1 Electrical Connection

Attention

Electrical safety hazard

- Do not use the Pentacam® AXL adjacent to or stacked with other equipment.
- If you have to use the Pentacam® AXL adjacent to or stacked with other equipment, verify the correct operation of the Pentacam® AXL.
- Only use the power adapter listed in the list, *sect. 22.1, page 56*.
- If you use a power strip to connect the Pentacam® AXL: Use a power strip that complies with the requirements of DIN EN 60601-1.
- Do not place the multiple socket extension cord on the floor.
- Do not use more than one multiple socket extension cord.
- Plug only the Pentacam® AXL and the computer that is being used with the unit (if applicable) into the multiple socket extension cord.
- Use a socket with a protective earth connection which is fully operating.

Abb. 7-1: Connecting

- Plug the connector of the Y cable into the jack and tighten the connection. Make sure that the plug is inserted in the correct position.

Note

Risk of equipment damage due to incorrect connection

If you do not connect the Pentacam® AXL properly, and the connection is live, the unit can be damaged within a short period of time.

- Do not use excessive force when connecting the electrical plug.

Questions? Contact FDA/CDRH/OCE/DID at CDRH-FOISTATUS@fda.hhs.gov or 301-796-8118

Records Processed under FOIA request 2016-2167; Released by CDRH on 09/06/2016

➔ Please pay attention to the specifications on the nameplate.

If the electrical plug is damaged, contact our service department or an authorized dealer to repair the damage.

➔ Firmly tighten the connection.

➔ Connect the Y-cable to the PC/laptop and the power adapter.

7.2 Switching On

Attention

Risk of incorrect measurements due to improper setup

Before taking measurements, the Pentacam® AXL has to be switched on, at least for one hour.

➔ The first step is to switch on the PC or laptop.

➔ Then turn on the Pentacam® AXL with the on/off switch (position ON). The LED on the switch lights up green, *fig. 7-1, page 16.*

7.3 Switching Off

➔ Close the Pentacam® AXL program and close the Patient Data Management.

➔ Shut down the Windows operating system.

➔ Turn the Pentacam® AXL off with the on/off switch (OFF position)

7.4 Software Installation on separate PCs

The Pentacam-Software is network compatible. This makes it possible to install the Pentacam® Software on several PCs, connected in a local network.

Make sure, that all PC in a network do have the same Pentacam® software version installed.

A Floating License Key is part of every Pentacam® shipment. Please ensure a proper installation based on the Manual for the Floating License Key.

This allows an interactive parallel evaluation of the Pentacam® exams based on the released optional software packages and modules.

The demo examinations included can be viewed on every computer having the Pentacam® software installed.

For more detailed information contact your authorized dealer or our service department.

Questions? Contact FDA/CDRH/OCE/DID at CDRH-FOISTATUS@fda.hhs.gov or 301-796-8118

Records Processed under FOIA request 2016-2167; Released by CDRH on 09/06/2016

8 Patient Data Management

8.1 Starting Patient Data Management

➔ After you have switched on the PC, it first loads the operating system. It then displays the user interface for "Patient Data Management".

The user interface for the Patient Data Management appears.

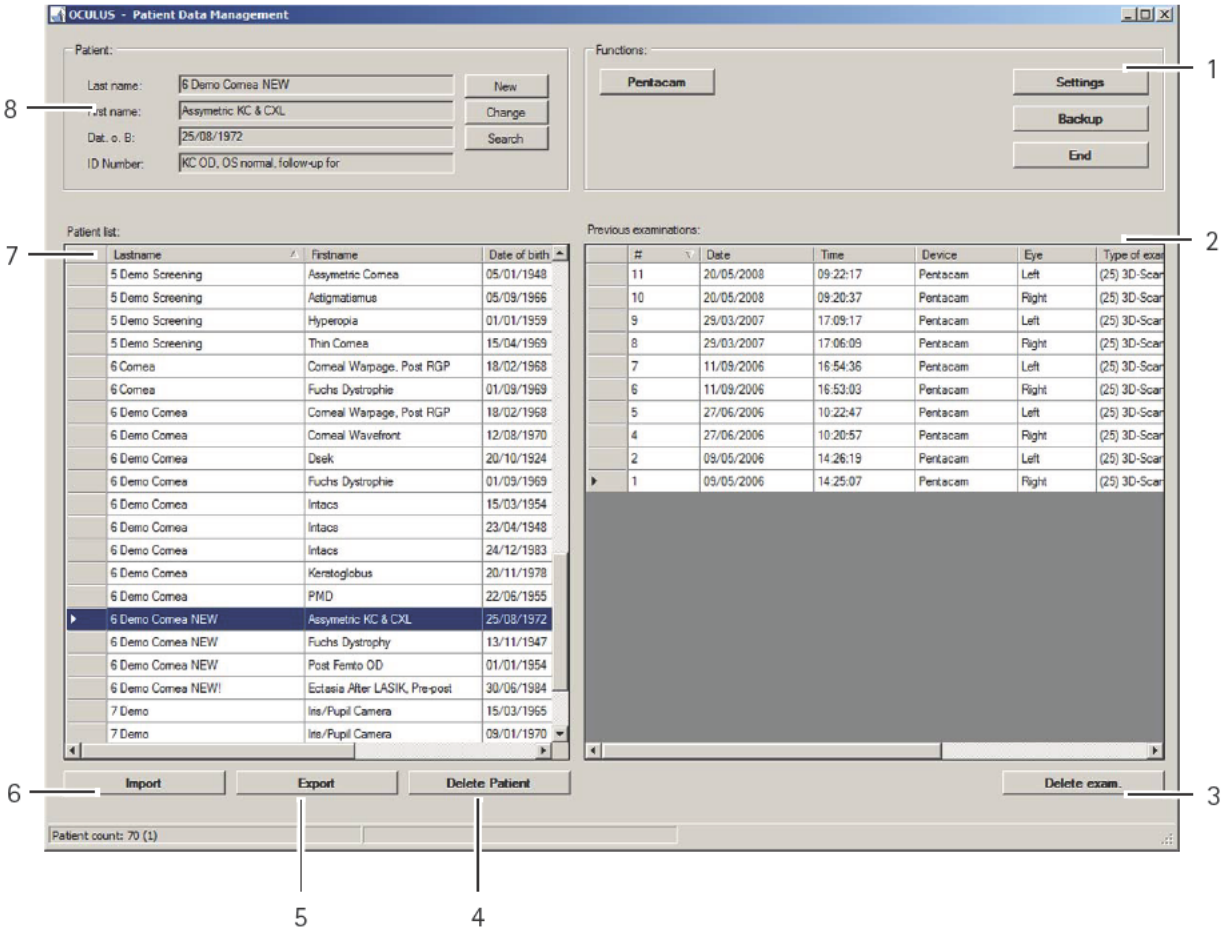

1 *"Functions" group box*
2 *Previous examinations*
3 *[Delete exam.] button*
4 *[Delete Patient] button*
5 *[Export] button*
6 *[Import] button*
7 *Patient list*
8 *"Patient" group box*

Fig. 8-1: Patient Data Management user interface

If the Windows desktop appears, you have to start the Patient Data Management program from there.

To get to the Pentacam® AXL program, you must first enter a new patient (8) or select an existing patient from the examination list (2).

For more information on Patient Data Management, refer to the *sect. 13, page 36*.

Questions? Contact FDA/CDRH/OCE/DID at CDRH-FOISTATUS@fda.hhs.gov or 301-796-8118

Records Processed under FOIA request 2016-2167; Released by CDRH on 09/06/2016

8.1.1 Entering a New Patient

- Press the [New] button to enter a new patient in the Patient Data Management system.
- Enter the patient's last name, first name and date of birth in the patient window.

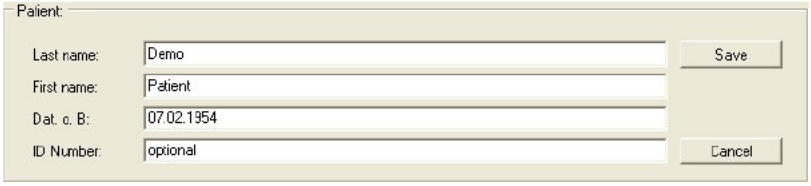

Fig. 8-2: Entering patients

Optionally you can enter an ID number for the patient.

- To save the data you entered, click [Save].

  The patient you have just entered now appears in the patient list.

8.1.2 Selecting an Existing Patient

The patient data list on the left-hand side of the screen displays all previously examined patients in alphabetical order.

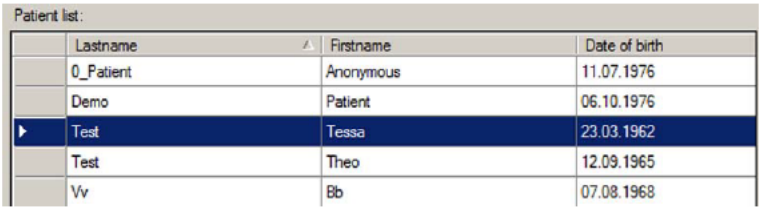

Fig. 8-3: Patient list

- Choose [Search] to quickly find the patient you are looking for in the list.
- Enter the patient's name or the first letter of the name in the "Last name" field.

  Alternatively, you can search for the patient using an ID number, first name or date of birth, assuming that one was assigned when the patient was first recorded.
- In the list that appears, click the entry you were searching for to transfer the patient's name to the patient window. This also brings up a list of any previous examinations for that patient in the examination window (bottom right side).

Questions? Contact FDA/CDRH/OCE/DID at CDRH-FOISTATUS@fda.hhs.gov or 301-796-8118

Records Processed under FOIA request 2016-2167; Released by CDRH on 09/06/2016

Extended Patient Search: [Extended] Checkbox

➔ Click on the [Extended] checkbox.

The screen displays additional search parameters which reference previous examinations. Proceed as for the input of a patient name.

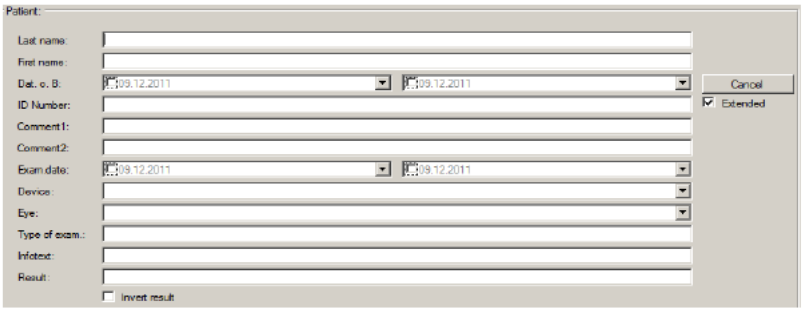

Fig. 8-4: Advanced search

8.2 Starting the Pentacam® AXL Software

Switching from Patient Data Management to the Pentacam® program:

➔ After selecting a patient: Press the [Pentacam] button to start the Pentacam® AXL program *(fig. 8-1, page 18)*

or

➔ Double-click the selected patient name or an examination to start the Pentacam® AXL program.

Questions? Contact FDA/CDRH/OCE/DID at CDRH-FOISTATUS@fda.hhs.gov or 301-796-8118

Records Processed under FOIA request 2016-2167; Released by CDRH on 09/06/2016

9 Pentacam® AXL Program

Note

The Pentacam® AXL program is not to be used to dictate therapy without professional correlation with other clinical findings and diagnostic tests.

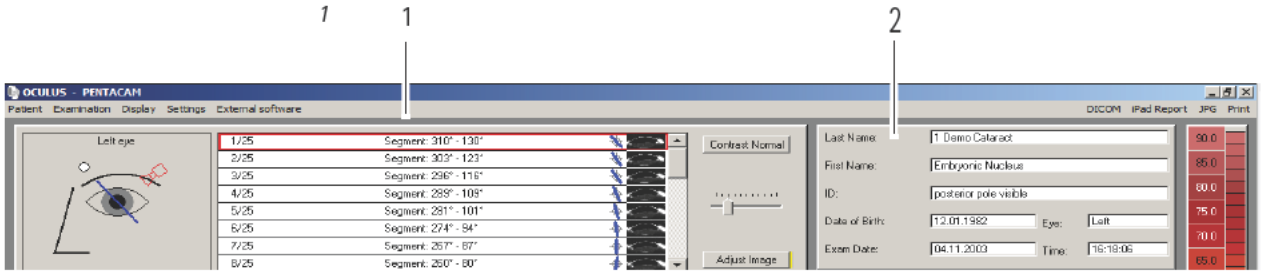

1 Menu bar
2 Examination and Patient data
Fig. 9-1: Pentacam® program menu (upper section)

Loading previous examinations

- ➔ Select the menu item [Examination] and click [Load].
  The dialog box "Load Examination" appears.
- ➔ Make a selection by clicking the required examination.
- ➔ Confirm your selection by clicking [OK], or by double clicking.
  The Pentacam® program will load the examination you have selected.

Starting a measurement

- ➔ Select the [Examination] tab and click [Scan].
  The blue slit light is activated and the Scan menu *(sect. , page 22)* appears.

Note

As this instruction manual focuses on the Pentacam® operating concept, the description of Pentacam® program functions is limited to starting the measuring process and loading previous examinations. The Reference manual contains detailed information on the functions of the Pentacam® program.

Questions? Contact FDA/CDRH/OCE/DID at CDRH-FOISTATUS@fda.hhs.gov or 301-796-8118

Records Processed under FOIA request 2016-2167; Released by CDRH on 09/06/2016

Helpful information

The Pentacam® program provides you a direct help. You can recognise that by a yellow mark

.

Questions? Contact FDA/CDRH/OCE/DID at CDRH-FOISTATUS@fda.hhs.gov or 301-796-8108

Records Processed under FOIA request 2016-2167; Released by CDRH on 09/06/2016

10 Scan Menu

Note

Switching from the Pentacam® program to the Scan menu:

➔ In the Pentacam® program *(fig. 9-1, page 21)* select the menu item [Examination] and click [Scan].

10.1 Screen layout

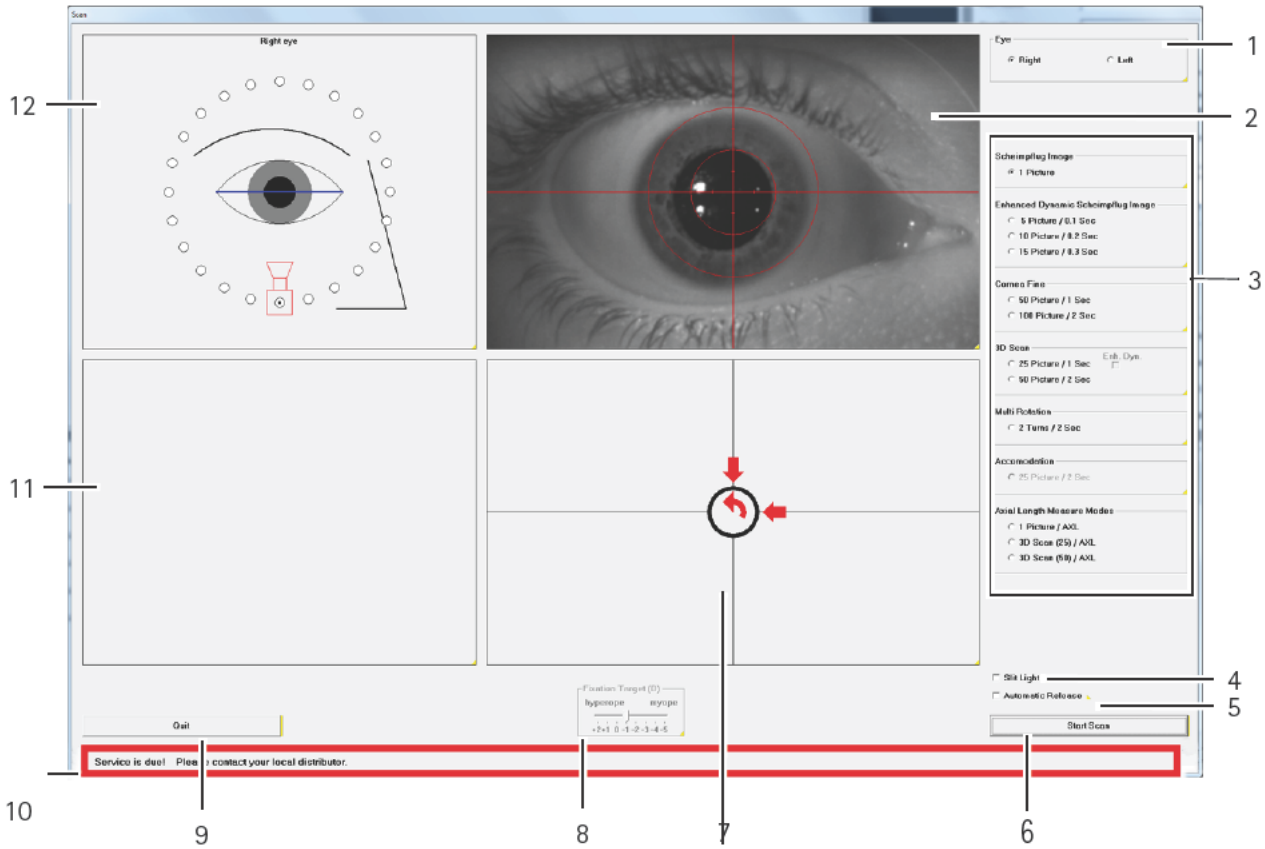

1 *"Eye" field*
2 *Pupil image*
3 *"Image Options" area*
4 *[Slit Light] checkbox*
5 *[Automatic Release] checkbox*
6 *[Start Scan] button*
7 *Adjustment window*
8 *Fixation Target*
9 *[Quit] button*
10 *Message about device*
11 *Scheimpflug Image*
12 *"Orientation" field*

Fig. 10-1: "Scan" screen ("HR" model)

- The eye currently being examined is detected automatically and is displayed in the "Eye" field (1).

Questions? Contact FDA/CDRH/OCE/DID at CDRH-FOISTATUS@fda.hhs.gov or 301-796-8118

Records Processed under FOIA request 2016-2167; Released by CDRH on 09/06/2016

- The Pupil Image (2) shows the vertical / horizontal positioning of the Pentacam. The object is to position the yellow dot marking the apex of the cornea in the centre of the crosshairs. The blue dot marks the centre of the pupil, while the blue ring frames the pupil.
- You can set the type of image required for the respective examination in the "Image Options" area (3) *(sect. 10.1.1, page 24 and sect. , page 25)*. „Axis Length Measure Modes": Click a button to enable a measurement of the axial length.
- Click the [Slit Light] checkbox (4) to activate/deactivate the blue light for illuminating the eye.
- Click the [Automatic Release] checkbox (5) to activate automatic measurement.
- Clicking the [Start Scan] button (6) activates manual measurement. You can also use the Return key.
- Inside the adjustment window (7), there are arrows showing you the direction in which you must move the Pentacam® to activate automatic measurement (Automatic Release).
- The "Fixation Target" setting (8) is a parameter to optimize the fixation.
- Click the [Quit] button (9) to abort the measurement.
- This line (10) shows messages about the device, for example if a service is due.
- The Scheimpflug image (11) shows the distance between Pentacam® and patient. The objective of this setting is to move the red dot on the front surface of the cornea so as to coincide with the red line.
- The "Orientation" field (10) shows the respective position of the camera and the eye, which is currently being examined.

10.1.1 Scheimpflug image settings

You can set the number and type of images required for the respective examination in the "Image Options" box (3).

"Scheimpflug Image" group box

- If you activate this option, the camera records only one Scheimpflug image. You can freely select the camera position you require by clicking the white rings in the "Orientation" field (11).

"Enhanced Dynamic Scheimpflug Image" group box

- Use this option to make the camera record either 5, 10 or 15 Scheimpflug images, with the camera remaining in the same position. Image averaging is carried out on the recorded images to minimise background noise. Only one Scheimpflug image is displayed. You can freely select the camera position you require by

Questions? Contact FDA/CDRH/OCE/DID at CDRH-FOISTATUS@fda.hhs.gov or 301-796-8118

Records Processed under FOIA request 2016-2167; Released by CDRH on 09/06/2016

clicking the white rings in the "Orientation" field. This type of image is suitable for a purely densitometric assessment of the lens.

"3D Scan" group box

- Use this option to select how many images you want the camera to record per scan. The difference is in the duration of the examination and the number of measuring points that are evaluated. A scan comprising 50 images takes longer of the patient provides the highest amount on measured elevation data.. This type of examination is used for evaluating the cornea and anterior chamber.

"Cornea Fine" group box

- Select this option for a more detailed image of the cornea.

  The camera does not capture the deeper-lying layers of the front part. You can select 50 Scheimpflug images for a recording time of one second, or 100 Scheimpflug images for a recording time of two seconds.

"Multi Rotation" group box

- If you select this option, the camera will record Scheimpflug images from 50 different positions while performing a full rotation twice around the eye.

Questions? Contact FDA/CDRH/OCE/DID at CDRH-FOISTATUS@fda.hhs.gov or 301-796-8118

Records Processed under FOIA request 2016-2167; Released by CDRH on 09/06/2016

"Accommodation" group box

- If you select this option, the camera will take a total of 50 Scheimpflug images. While the camera is recording the images, the "Fixation Target" shifts constantly from -5 D to +2 D. The camera records the Scheimpflug images from a pre-selected camera position.

"Axial Length Measure modes" group box

- If you select this option, the desired mode for the axial length measurement is enabled.

[Enh. Dyn.] checkbox in the "3D Scan" group box

- Activating the "Enh. Dyn." function prolongs the exposure time per Scheimpflug image. The advantage is an accurate representation of phakic IOLs. If you select this recording mode, colours and evaluations are neither calculated nor displayed.

"Fixation Target" slider

- Use of the "Fixation Target" enables a better fixation of the patient. For this, the active "Fixation Target" (8), i.e. the LED blinking red in the middle of the blue slit, can be shifted in steps of 0.5 D. The object is to offset defects in the patient's vision and ensure a simpler method of fixation.

Questions? Contact FDA/CDRH/OCE/DID at CDRH-FOISTATUS@fda.hhs.gov or 301-796-8108

Records Processed under FOIA request 2016-2167; Released by CDRH on 09/06/2016

10.2 Information for recording Scheimpflug images with a Pentacam® AXL

Type of examination	Examination mode	Images	Automatic measurement	Notes
Topography	3D scan	25-50	Yes	
Pachymetry	3D scan	25-50	Yes	
Analysis of the anterior chamber	3D scan	25-50	Yes	Do not apply mydriatic drops.
Artificial lenses (general)	3D scan	15	Yes	If the pupil is insufficiently dilated, apply mydriatic drops Use 3D scan for measurements.
Measuring functions	3D scan	25-50	Yes	If the pupil is insufficiently dilated, apply mydriatic drops
Densitometry	3D scan Enhanced dynamic	25-50 5-15	No	Use the same number of images to enable a progress check.
IOLs, ICLs, PIOLs	3D scan for PIOLs, possibly longer exposure	25-50	Yes	If the pupil is insufficiently dilated, apply mydriatic drops

Questions? Contact FDA/CDRH/OCE/DID at CDRH-FOISTATUS@fda.hhs.gov or 301-796-8118

Records Processed under FOIA request 2016-2167; Released by CDRH on 09/06/2016

11 Measuring Procedure

Attention

Risk of incorrect measurement due to incorrect use

➔ Before first use: Let OCULUS or an authorized dealer train you in the operation of the Pentacam® AXL.

Risk of incorrect measurements due to improper setup

➔ Before taking measurements, the Pentacam® AXL has to be switched on, at least for one hour.

Default settings

➔ Start the Scan menu *(fig. 10-1, page 23)*.

➔ If necessary make changes to the image options for the particular part of the front of the eye that is to be examined.

The default settings in the "3D Scan" options are "25 images/ 1 second".

➔ Adjust the table height.

➔ Check that fresh paper has been put onto the chin rest, *sect. 15.4, page 46*.

➔ Check that the forehead rest has been cleaned and disinfect the forehead rest after each examination, *sect. 17, page 48*.

➔ Check that the illuminated slit with, the lens in front of the camera and the acrylic glass are clean.

➔ Ask the patient to place his or her head on the chin and forehead rest.

➔ Do not touch the patient and the Pentacam® AXL simultaneously.

Questions? Contact FDA/CDRH/OCE/DID at CDRH-FOISTATUS@fda.hhs.gov or 301-796-8108

Records Processed under FOIA request 2016-2167; Released by CDRH on 09/06/2016

Rough adjustment

➔ The black ring marking between the chin rest and the forehead rest (1) should be used for gauging the required height of the patient's eyes.

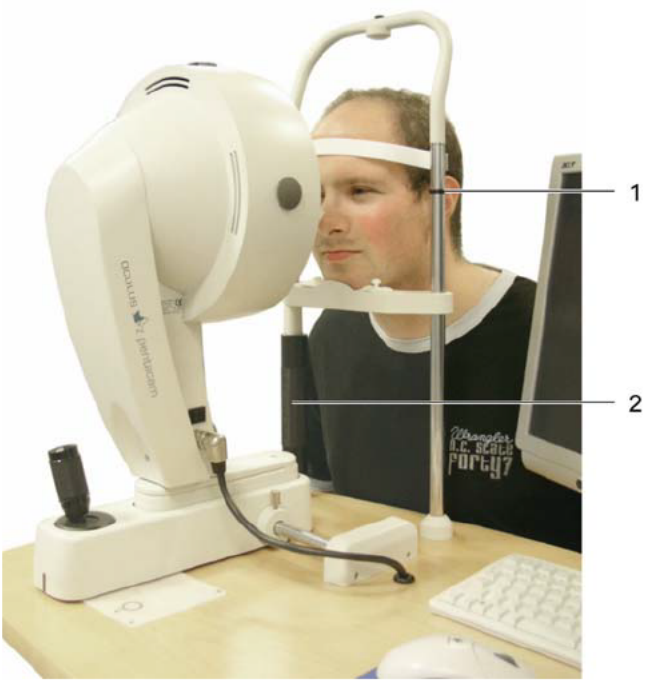

1 Marking (black ring) *2 Twist grip*

Fig. 11-1: Rough adjustment of the chin and forehead rest

➔ Adjust the patient's eye level using the twist grip (2).
The patient is positioned correctly when chin and forehead touch the rests and the eyes are level with the marking.

Questions? Contact FDA/CDRH/OCE/DID at CDRH-FOISTATUS@fda.hhs.gov or 301-796-8118

Records Processed under FOIA request 2016-2167; Released by CDRH on 09/06/2016

➔ Example of a rough adjustment for the right eye: Move the cross slide (1) until the marking at the end of the cross slide (4) roughly coincides with the circle R (3) on the sliding plate.

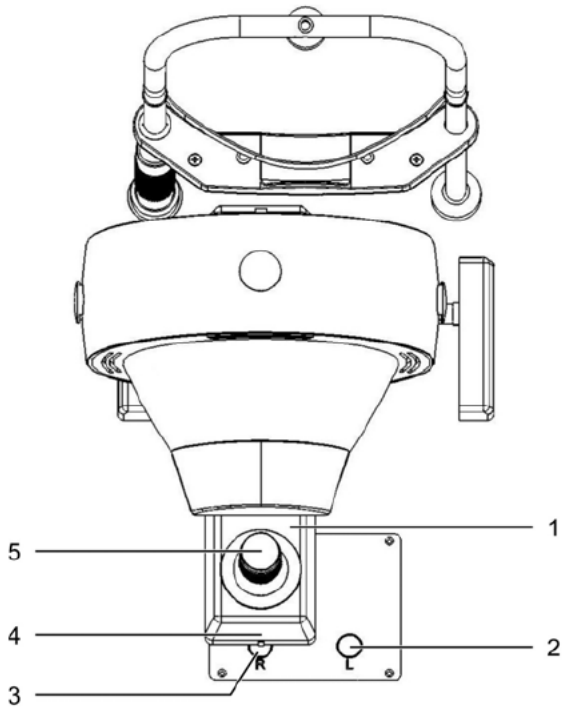

1 Cross slide
2 Left marking
3 Right marking
4 Marking on the cross slide
5 Joystick

Fig. 11-2: Markings on the cross slide

➔ Look at the patient's eye you are examining from one side and make sure that the blue slit light illuminates the cornea.

➔ If necessary, adjust the position of the cross slide to the left or right.

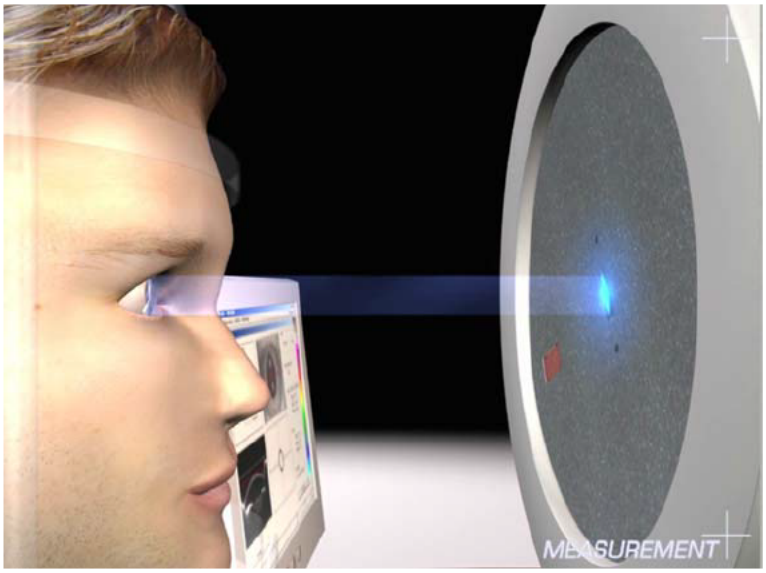

Fig. 11-3: Slit light on the cornea

Questions? Contact FDA/CDRH/OCE/DID at CDRH-FOISTATUS@fda.hhs.gov or 301-796-8108

Records Processed under FOIA request 2016-2167; Released by CDRH on 09/06/2016

Note

If the blue slit light is not visible, ensure that you have activated the [Slit Light] checkbox on the "Scan" screen.

Darkening the room/dark sheet

➔ If the lighting in the examination room has not been turned down or switched off, use the dark sheet supplied to cover the patient and the Pentacam.

Adjustment

➔ Move the cross slide towards the patient until the Scheimpflug image shows the cornea of the eye that you are examining.

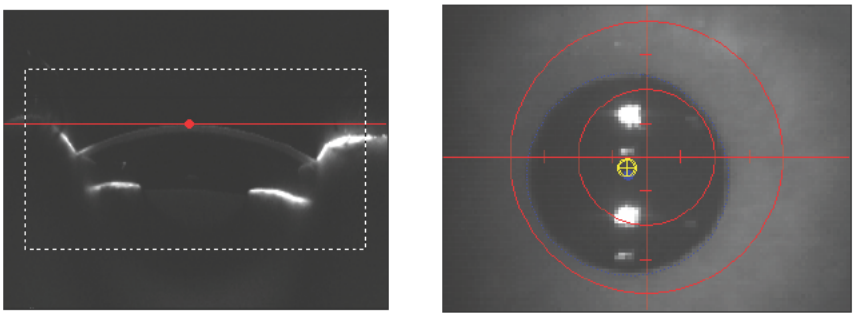

Fig. 11-4: Scheimpflug image (left) and pupil image (right)

The image is sharpest when the red dot coincides with the red line in the Scheimpflug image.

➔ Focus the pupil image by moving the joystick towards the Pentacam® or away from it.

➔ Adjust the left/right position of the Pentacam® and its height setting.

Move the joystick to the left or right and rotate the joystick clockwise or anticlockwise.

The tentative final position of the camera is reached when the yellow dot is in the centre of the crosshairs.

➔ Ask the patient to widen his or her eye and not to blink.

Fine adjustment

➔ Make any fine adjustments required based on the information in the adjustment window. To do so, move the joystick in the specified directions.

Questions? Contact FDA/CDRH/OCE/DID at CDRH-FOISTATUS@fda.hhs.gov or 301-796-8118

Records Processed under FOIA request 2016-2167; Released by CDRH on 09/06/2016

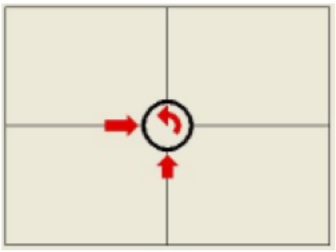

Example:

- Move the joystick to the right.
- Turn the joystick counter clockwise.
- Move the joystick forwards.

Arrow	Camera movement	Joystick movement[a]
→	right	Move the joystick to the right
←	left	Move the joystick to the left
↑	forward	Move the joystick toward the patient
↓	back	Move the joystick away from the patient
↱	up	Rotate the joystick clockwise
↰	down	Rotate the joystick counter-clockwise

a. If you turn the joystick to its limit, the measuring head and the chin rest move in opposite directions.

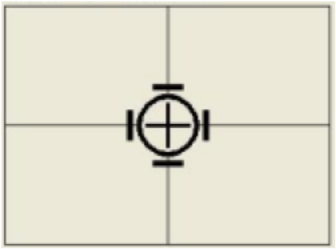

When you have achieved the expected position, a black cross will appear in the centre of the ring, surrounded by four black lines. The Pentacam® will automatically begin measuring, alternately you can start the measuring procedure manually.

- For measuring manually: Start measuring by clicking [Start Scan] or by pressing the return key.

Attention

It may not be possible to carry out a measurement with manual release.

- Ask the patient to remove his or her head from the rest.
- Check the measurement results by referring to the quality specifications *(sect. 12, page 33)*.

Questions? Contact FDA/CDRH/OCE/DID at CDRH-FOISTATUS@fda.hhs.gov or 301-796-8118

Records Processed under FOIA request 2016-2167; Released by CDRH on 09/06/2016

12 Quality Specifications

After you have begun measuring either automatically or manually, the Pentacam® program opens. The "QS" value appears in field (1).

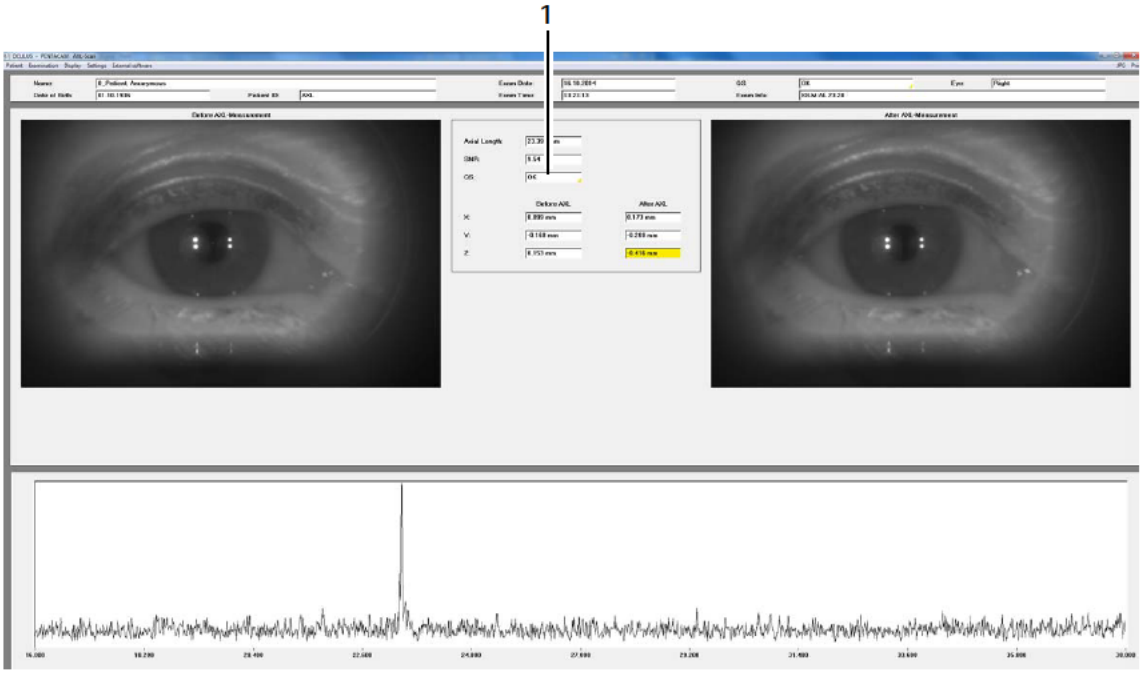

1 "QS" display

Fig. 12-1: Pentacam® program with "QS"display

Note

All examinations are automatically saved, regardless of the quality of the measurement taken.

If the "QS" display

- reads OK, the measurement is correct and can be reproduced.
- is red, you must repeat the measurement.

Questions? Contact FDA/CDRH/OCE/DID at CDRH-FOISTATUS@fda.hhs.gov or 301-796-8118

Records Processed under FOIA request 2016-2167; Released by CDRH on 09/06/2016

➔ is highlighted in yellow, click on the "QS" button.
The following dialog box appears:

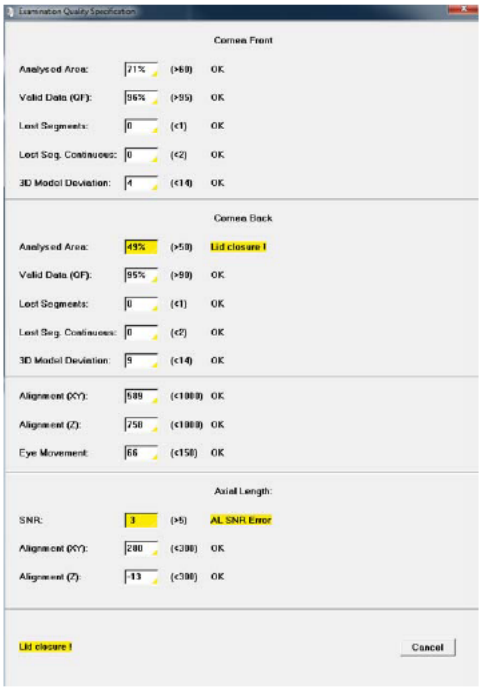

Fig. 12-2: Examination Quality Specification

➔ Check the measurement results.

➔ If you have any doubts, repeat the measurement.

Notes on individual parameters

- **Analysed Area**
  If this value is less than the permissible threshold, the patient must widen his or her eye.
- **Valid Data**
  If this value is less than the permissible threshold, you must darken the room.
- **Lost Segments and Lost Seg. Continuous**
  If one of these values exceeds the permissible threshold, you must ask the patient not to blink while you are measuring.
- **Alignment (XY) and Alignment (Z)**
  If one of these values exceeds the permissible threshold, you may have moved the cross slide at the moment you began measuring.
- **Eye Movement**
  If this value exceeds the permissible threshold, it is possible that fixation of the patient is inadequate.
- **SNR**
  Signal to noise ratio

Questions? Contact FDA/CDRH/OCE/DID at CDRH-FOISTATUS@fda.hhs.gov or 301-796-8108

Records Processed under FOIA request 2016-2167; Released by CDRH on 09/06/2016

Terminating "QS"

- ➔ Click [Cancel] to return to the Pentacam® program.
- ➔ If required, delete the measurement if the image is inadequate.
- ➔ Terminate the current examination which has been saved.
- ➔ If required, make preparations to examine another patient. In the "Pentacam" overview, select the "Examination" menu and click [New Patient/End].

Questions? Contact FDA/CDRH/OCE/DID at CDRH-FOISTATUS@fda.hhs.gov or 301-796-8118

Records Processed under FOIA request 2016-2167; Released by CDRH on 09/06/2016

13 Managing Patient Data

Once you have completed an examination, you can do the following with the patient data:

- Rename it, *sect. 13.1, page 36*
- Export it, *sect. 13.2, page 36*
- Import it, *sect. 13.3, page 38*

For more information on Patient Data Management, refer to the *User Guide*.

13.1 Rename Patient Data

After creating of the patient data, you can edit it.

➔ Press the [Change] button.

The input boxes for patient data are now enabled, and the cursor jumps to the "Last name" field.

➔ Change the entries in the individual boxes.

➔ Press the [Save] button.

13.2 Exporting Patient Data

Patient and examination data can be exported, for example, for forwarding to another clinic.

➔ Select the patient and also one of the examinations in the respective list as required.

➔ Click [Export] button below the patient list. The following dialog appears:

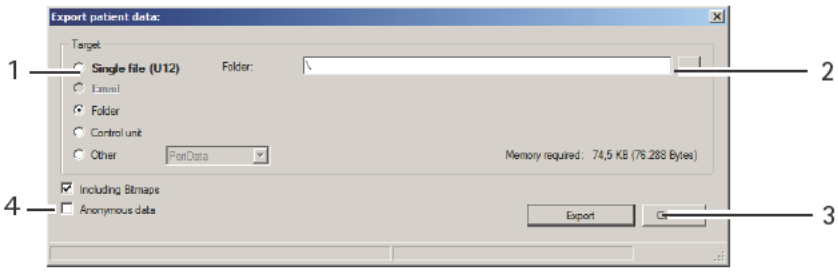

1 Saving destination selection
2 [...] button
3 [Cancel] and [Export] buttons
4 Options for data export

Fig. 13-1: "Export patient data" dialog

Questions? Contact FDA/CDRH/OCE/DID at CDRH-FOISTATUS@fda.hhs.gov or 301-796-8118

Records Processed under FOIA request 2016-2167; Released by CDRH on 09/06/2016

The default options for import and export of data are configured in the "Settings" field, see also the *User Guide*.

Depending on the settings, you may not have to perform all of the following steps (e.g. selection of the directory).

➔ Select the "Target" (1) where you would like to export the data.

Recommendation: Export the patient data using the "Single file (U12)" option.

➔ Press the [...] button. (2).

➔ In the dialog that appears, select the folder or the file to which the patient data should be exported.

➔ Specify the name and destination of the file you are saving.

➔ Make sure you have selected [Including Bitmaps].

➔ Click [Export].

The patient and examination data have now been saved at the destination specified.

You can send data stored on the hard drive as an e-mail attachment.

Note

Requirements for transferring data to another PC:

- The Pentacam® program must be installed on the other PC. If the program is updated on the Pentacam® PC (sender), the program on the other PC (recipient) must also be updated.
- Make sure, that the PC is connected to a local network controlled by the Floating License Key or that a single license key is connected to the PC in order to interactively evaluate the exams.

Questions? Contact FDA/CDRH/OCE/DID at CDRH-FOISTATUS@fda.hhs.gov or 301-796-8118

Records Processed under FOIA request 2016-2167; Released by CDRH on 09/06/2016

13.3 Importing Patient Data

If you receive patient data, for example, on a USB stick, you can import these data.

Note

Risk of loss of data due to computer viruses

Computer viruses can cause loss of data.

➔ Run a virus check before importing data from the USB flash drive.

➔ Press the [Import] button. The following dialog appears:

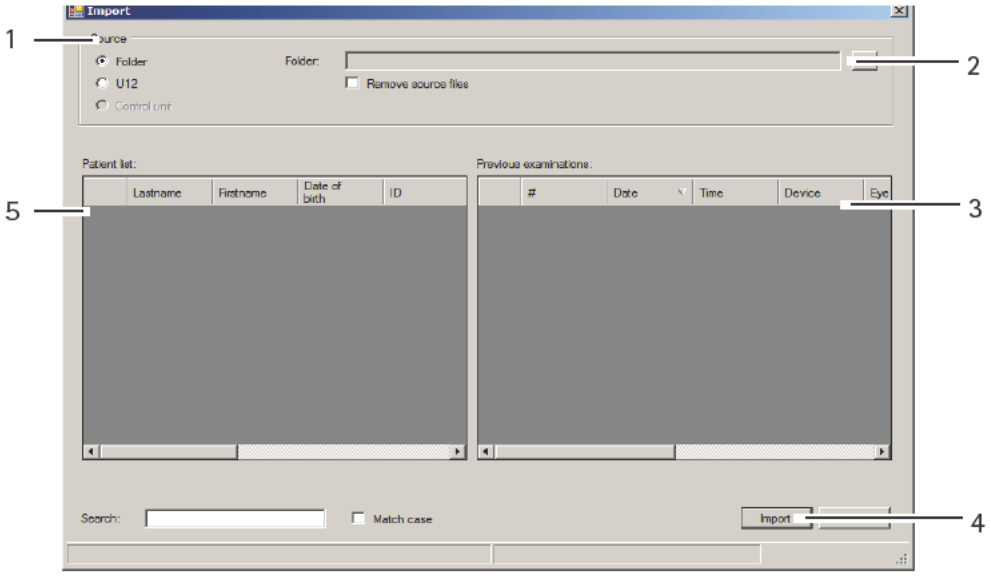

1 *Select data source*
2 *[...] button*
3 *Previous examinations*
4 *[Import] button*
5 *Patient list*

Fig. 13-2: "Import" dialog

The default options for import and export of data are configured in the "Settings" field, see also the *User Guide*.

➔ Depending on the settings, you may not have to perform all of the following steps (e.g. selection of the directory).

➔ Select the option (1) where the source data are contained ("Folder" or "U12" (single file)).

Recommendation: Export the patient data using the "Single file (U12)" option.

➔ Press the [...] button. (2).

Questions? Contact FDA/CDRH/OCE/DID at CDRH-FOISTATUS@fda.hhs.gov or 301-796-8118

Records Processed under FOIA request 2016-2167; Released by CDRH on 09/06/2016

- ➔ In the dialog box, select the directory or the file where the patient data are located.
- ➔ Confirm your selection with [OK] or [Open].
  The patients and the associated examinations that are found are displayed in the lower part of the dialog.
- ➔ To import the data, press the [Import] button (4).
  The data will then be available in the Patient Data Management system.

13.4 Data Backup

You should make a backup copy of patient and examination data at regular intervals. In case of loss of data, you can reconstruct the data from a previously created backup with the help of this function. Since data backup takes several minutes, depending on the scope of the database and the data to be backed up, a backup should be carried out when the PC and the device will not be needed.

Note

Risk of loss of data due to computer viruses

Computer viruses can cause loss of data.

- ➔ Run a virus check before making a backup to a USB flash drive.

The general rules for security backups apply to the creation of backup copies created with the help of the Patient Data Management system. Storage of backup files should always be done on a separate system (e.g. on a USB flash drive with adequate capacity).

Questions? Contact FDA/CDRH/OCE/DID at CDRH-FOISTATUS@fda.hhs.gov or 301-796-8118

Records Processed under FOIA request 2016-2167; Released by CDRH on 09/06/2016

13.4.1 Backup Data

➔ Press the [Backup] button at the top right of the Patient Data Management system. The following dialog is displayed:

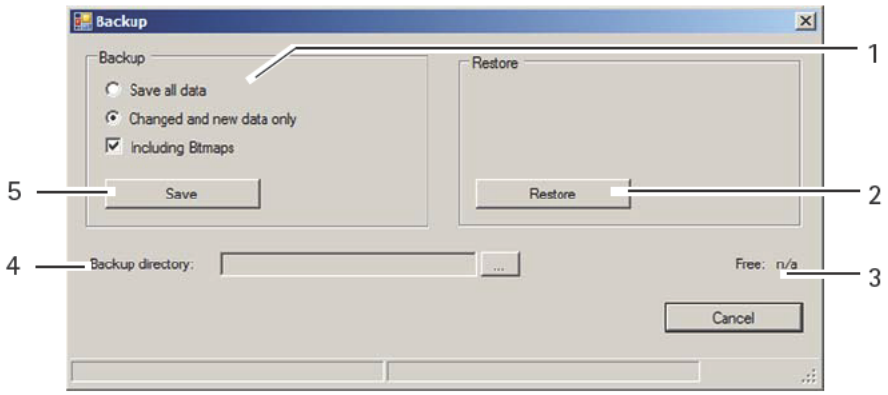

1 *Backup data selection*
2 *[Restore] button*
3 *Display free storage space*
4 *Backup directory and button [...]*
5 *[Save] button*

Fig. 13-3: "Backup" dialog

➔ Select whether all of the data or only changed data should be backed up.

The Patient Data Management system internally tags all saved data records.

If you select the option "Changed and new data only", only the data records that were not saved during a previous backup will be backed up.

➔ Press the [...] button to the right of the "Backup directory" box (4).

➔ In the dialog that appears, select the folder to which the data should be backed up.

➔ Confirm your selection with [OK].

➔ To back up the data, press the [Save] button (5). The previously selected data will then be backed up to the corresponding folder.

13.4.2 Reconstructing Data

If a loss of data occurs, the data from a previous backup can be re-imported into the Patient Data Management system.

➔ Press the [...] button.

➔ In the dialog that appears, select the folder which contains the backup data.

➔ Confirm your selection with [OK].

➔ To import the data, press the [Restore] button (2). All data in the appropriate directory are copied to the Patient Data Management system.

Questions? Contact FDA/CDRH/OCE/DID at CDRH-FOISTATUS@fda.hhs.gov or 301-796-8118

Records Processed under FOIA request 2016-2167; Released by CDRH on 09/06/2016.

13.4.3 Automatic Backup

In addition to the manually performed backup, it is also possible to automatically run a backup when exiting the Patient Data Management system. The settings required for this can be made in the "Settings" area, see *User Guide*.

Questions? Contact FDA/CDRH/OCE/DID at CDRH-FOISTATUS@fda.hhs.gov or 301-796-8118

Records Processed under FOIA request 2016-2167; Released by CDRH on 09/06/2016

14 Test measurements with the Pentacam

The Pentacam® AXL is tested and calibrated in the Oculus factory. OCULUS Optikgeraete GmbH recommends to perform regular test measurements of the Pentacam® AXL.

A human eye should be measured initially. Minimum 5 consecutive measurements per eye should be done and the arithmetic mean has to be calculated and recorded.

Once in a month this measurement should be repeated using this eye as described above.

The arithmetic mean of the initial and the current measurement should be compared.

The tolerance range of the original and the current results are described in the table chart below.

	Tolerance Range
Curvature	+/- 0.25 mm
Pachymetry	+/- 10 µm

If the difference between the initial and the current measurement is outside the tolerance range, please inform us or contact your authorized Oculus distributor to get further support.

Questions? Contact FDA/CDRH/OCE/DID at CDRH-FOISTATUS@fda.hhs.gov or 301-796-8118

Records Processed under FOIA request 2016-2167; Released by CDRH on 09/06/2016

15 Cleaning, Disinfection and Maintenance

Cleaning and disinfection of the Pentacam® AXL is described in this chapter.

Sterilization is not required.

➔ Heed the product descriptions and instruction manuals of products and equipment you use to care for, clean, and disinfect the unit and/or its accessories.

➔ Do not clean the Pentacam® AXL with aggressive, chlorine containing, abrasive or sharp cleaning agents.

15.1 Cleaning

Attention

Risk of electric shock if the Pentacam® AXL is not completely disconnected from the mains for the cleaning.

➔ Turn the Pentacam® AXL off, *sect. 7.3, page 17*.

➔ Pull the power plug before cleaning. When disconnecting electrical connections, pull on the respective plug and not on the cable itself.

Required materials:

- Antistatic cleaning agent
- Cleaner for painted surfaces: Mixture of equal parts of alcohol and distilled water, possibly with a few drops of household detergent
- Soft, lint-free cloth
- Purified compressed air
- commercial clean agent for the acrylic glass

Cleaning intervalls

➔ Clean the components of the Pentacam® AXL once a month or if necessary.

Cleaning the Housing

➔ It is best to clean the housing surfaces with a soft cloth and an anti-static cleaning agent.

➔ Wipe off any residue from painted surfaces with the mixture for painted surfaces.

Cleaning the Chin-Forehead Rest

➔ Make sure that no liquid gets into any of the openings of the Pentacam® AXL.

Do not use liquid from aerosol cans.

Questions? Contact FDA/CDRH/OCE/DID at CDRH-FOISTATUS@fda.hhs.gov or 301-796-8118

Records Processed under FOIA request 2016-2167; Released by CDRH on 09/06/2016

- Clean the chin-forehead rest with a soap solution (or with alcohol, if very dirty).
- Use a lint-free, damp cloth.

Cleaning the illuminated slit

The optical components illuminating the slit, and the lens in front of the camera are precision parts and sensitive to pressure. The surfaces of these components are susceptible to scratching.

Attention

When cleaning the illuminated slit, do not use a cloth or other cleaning agents.

- Carefully clean the centre of the illuminated slit with purified compressed air.
- Clean the lens in front of the camera using a dry, lint-free cloth.
- Clean the acrylic glass with a commercial clean agent.

15.2 Disinfection

- Recommendation: Use disinfection wipes suitable for medical devices.

Note

Equipment damage caused by disinfectant solution

The disinfectant solution may damage the surface of the device if it is sprayed directly on it.

- Spray the disinfectant solution onto a cleaning cloth, do not spray it directly on the device.

- Disinfect the forehead rest after each examination.
- If you do not use paper for the chinrest, disinfect the chinrest after each examination.

Questions? Contact FDA/CDRH/OCE/DID at CDRH-FOISTATUS@fda.hhs.gov or 301-796-8108

Records Processed under FOIA request 2016-2167; Released by CDRH on 09/06/2016

15.3 Maintenance

To ensure that it functions correctly and safely we recommend the following: Have the Pentacam® AXL checked after 25000 examinations or every two years by our service department or an authorized dealer. The Pentacam® AXL will inform you.

By daily pop up window:

Fig. 15-1: Daily pop up window

In the settings, *see User Guide*:

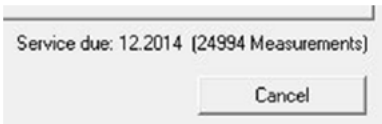

Fig. 15-2: Date of next service and number of performed examinations

In the scan menu, *sect. 10, page 23*:

Fig. 15-3: Preliminary information (3 month before)

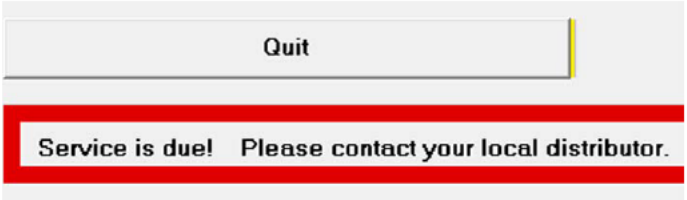

Fig. 15-4: Information when service is due

In examinations (it will be stored):

Fig. 15-5: Sign to perform maintenance

Let the Pentacam® AXL checked by our service department or an authorized dealer.

Questions? Contact FDA/CDRH/OCE/DID at CDRH-FOISTATUS@fda.hhs.gov or 301-796-8118

Records Processed under FOIA request 2016-2167; Released by CDRH on 09/06/2016

Caution

Risk of personal injury or material damage due to invisible laser radiation

The Pentacam® AXL contains a Class 1 laser according to IEC 60825-1: 2007. It is an encapsulated laser system. When the Pentacam® AXL cover is opened, you may be exposed to invisible, Class 3R (5 mW) laser radiation.

- ➔ Never open the unit.
- ➔ For authorized service personnel only: When doing maintenance jobs, avoid looking directly into the laser beam.

15.4 Attaching Paper to the Chin Rest

If you want to attach new chin rest paper, follow these instructions:

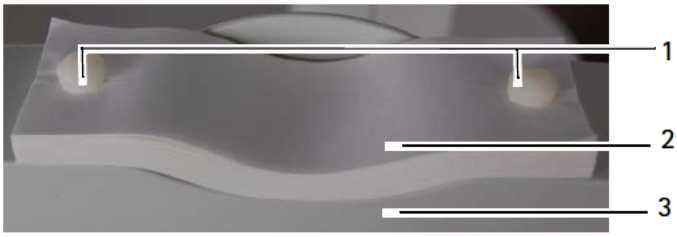

1 Pins
2 Paper for chin support
3 Chin rest

Fig. 15-6: Fasten chin rest paper

- ➔ Pull the two pins (1) out of the chin rest.
- ➔ Place the chin rest paper (2) in such a way that the holes of the paper and those in the chin rest (3) are aligned.
- ➔ Insert the two pins (1) in the chin rest.

Questions? Contact FDA/CDRH/OCE/DID at CDRH-FOISTATUS@fda.hhs.gov or 301-796-8108

Records Processed under FOIA request 2016-2167; Released by CDRH on 09/06/2016

16 Troubleshooting

Attention

If an error occurs which you are unable to correct by following the instructions below, label the device as "out of order" and contact our service department or an authorised dealer.

Error: After you have started the Pentacam® program *(sect. , page 21)*, the following dialog box appears: "No communication with Pentacam!".

Solution:

- Check whether the indicator light on the power supply is on. If not, connect the power supply to the mains.
- Check whether the power supply cable is correctly attached to the Pentacam® AXL.
- Check whether the blue slit light is visible in the Scan menu *(sect. , page 22)*.
- Check whether the USB connector is properly inserted.
- Switch the Pentacam® off and restart the PC. Switch the Pentacam® AXL on as soon as Patient Data Management becomes active. When you start the Pentacam® program, the message, "Load Bootloader" must appear.
- Contact the service department or your authorised dealer.

Questions? Contact FDA/CDRH/OCE/DID at CDRH-FOISTATUS@fda.hhs.gov or 301-796-8118

Records Processed under FOIA request 2016-2167; Released by CDRH on 09/06/2016

17 Transport and Storage

The Pentacam® AXL, must be properly dismantled and packed before being transported or stored.

17.1 Information on Transport and Storage

Storage

This device cannot withstand the temperature conditions for storage specified in ISO 15004-1.

➔ Do not store the Pentacam® AXL in conditions in which temperatures above 50°C and below -10° C could occur.

In accordance with DIN EN 60601-1, the storage conditions are:

Ambient temperature range	-10°C to +55°C
Relative humidity, including condensation	10% to 95%
Air pressure range	700 hPa to1060 hPa

Transport

The transport and storage conditions according to DIN EN ISO 60601-1 are:

Ambient temperature range	-40°C to +70°C
Relative humidity range from	10% to 100%, including condensation
Air pressure range	500 hPa to 1060 hPa

17.2 Disassembly

➔ End the current session.

➔ Switch off the device.

➔ Disconnect the cable from the computer/laptop and the power adapter.

Questions? Contact FDA/CDRH/OCE/DID at CDRH-FOISTATUS@fda.hhs.gov or 301-796-8108

Records Processed under FOIA request 2016-2167; Released by CDRH on 09/06/2016

Abb. 17-1: Disassembly

➔ Loosen the screw connection of the Y cable and pull it out.
When disconnecting electrical connections, pull on the respective plug and not on the cable itself.

17.3 Transport and Storage

Attention

Risk of equipment damage due to incorrect shipment or from improper storage

➔ Avoid shocks, vibrations, and contamination.
➔ Avoid high temperatures and humidity.

➔ Transport the Pentacam® AXL carefully.
➔ Do not hold the device by the joystick to carry it.
➔ Store the Pentacam® AXL in compliance with the storage conditions.
➔ Avoid placing near heaters and moisture.

Questions? Contact FDA/CDRH/OCE/DID at CDRH-FOISTATUS@fda.hhs.gov or 301-796-8118

Records Processed under FOIA request 2016-2167; Released by CDRH on 09/06/2016

18 Disposal

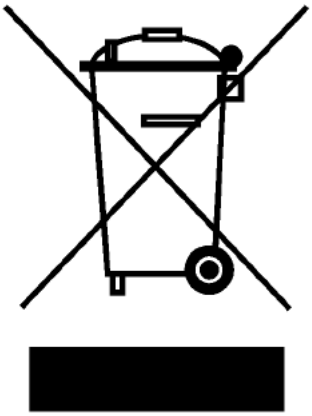

In accordance with Directive 2002/96/EC of the European Parliament and the Council of 27 January 2003, and in accordance with German law governing the marketing, return and environmentally compatible disposal of used electrical and electronic devices, such appliances must be recycled and may not be discarded as household waste.

➔ Dispose the Pentacam® AXL in a compliant manner.

19 Terms of Warranty and Servicing

19.1 Terms of Warranty

Please note the following warranty provisions:

- Prior to and while operating the device it is important that you heed the instruction manual and safety instructions.
- In accordance with legal regulations, you are entitled to a warranty for the Pentacam® AXL.
- If modifications are made to the Pentacam® AXL by unauthorized persons, all warranty claims shall be voided. Improper modifications and repairs may result in considerable hazards to users and patients.
- Any entitlement to a warranty shall also be void if unauthorized persons interfere with the supplied computer hardware and software.
- Any transport damage must be reported immediately to the shipping company. Have the transport damage noted on the bill of lading so that complaint handling and compensation of damages can proceed in an orderly manner.
- In general, our Business and Shipping Terms on the date of purchase apply.

Questions? Contact FDA/CDRH/OCE/DID at CDRH-FOISTATUS@fda.hhs.gov or 301-796-8118

Records Processed under FOIA request 2016-2167; Released by CDRH on 09/06/2016

19.2 Assumption of Liability for Functions and Damage

OCULUS will only accept responsibility for the safety, reliability and serviceability of the Pentacam® AXL if the unit is used in compliance with the following terms:

- Only use the equipment in conformance with this instruction manual.
- There are no parts either on or inside the Pentacam® AXL that require maintenance or repair by the user. If assembly work, modifications, adjustments, repairs, changes or service are performed by unauthorized personnel, or if the Pentacam® AXL is improperly maintained or handled, then any liability by OCULUS is voided.
- If the above-referenced work is performed by authorized persons, request a certification of the scope and type of repair, and, if necessary, the changes to the standard values or to the operating range from the service technician. This certification must contain the date of performance and statement of the performing firm, with signature.
- If requested, OCULUS will provide the service technician with a list of spare parts and additional descriptive material for this purpose.
- Make certain that only original OCULUS parts are used.

19.3 Manufacturer and Service Address

Supplemental information is available from our Service Department or from our authorized representatives.

Manufacturer and Service address:

OCULUS Optikgeräte GmbH
Münchholzhäuser Straße 29
D 35582 Wetzlar
Tel.: +49 641 2005-0
Fax: +49 641 2005-255
E-mail: sales@oculus.de
www.oculus.de

USA:

OCULUS, Inc.
17721 59th Avenue NE
Arlington
WA 98223-1337
Tel. +1 425-670-9977
Fax +1 425-670-0742
e-mail: sales@oculususa.com

http://www.oculususa.com

Questions? Contact FDA/CDRH/OCE/DID at CDRH-FOISTATUS@fda.hhs.gov or 301-796-8118

Records Processed under FOIA request 2016-2167; Released by CDRH on 09/06/2016

20 Declaration of Conformity

OCULUS Optikgeräte GmbH
Münchholzhäuser Str. 29
D-35582 Wetzlar
Germany

Tel: +49 (0)641 / 20 05 – 0
Fax: +49 (0)641 / 20 05 – 255

Konformitätserklärung
Declaration of Conformity

Wir, OCULUS Optikgeräte GmbH, erklären in alleiniger Verantwortung, dass das unten beschriebene Medizinprodukt allen Anforderungen der nachstehenden Richtlinie und den damit verbundenen harmonisierten Normen entsprechen: 93/42/EWG

We, OCULUS Optikgeräte GmbH, declare on our own responsibility that the medical device described below is in compliance with requirements of the following directive and their related harmonized standards: 93/42/EEC

Produktbezeichnung/ Product name	Vorderabschnitts-Tomograph/ Anterior segment tomographer
Artikelnummer und Typ/ Article number and type	70100 Pentacam AXL
Gültig ab Seriennummer/ Valid from serial number	70100 1001 4101
Konformitätsbewertungsverfahren/ Conformity assessment procedure	Richtlinie 93/42/EWG: Anhang II ohne Abschnitt 4 Conformity according: 93/42/EEC, Annex II excluding section 4
Benannte Stelle/ Notified body	TÜV SÜD Product Service GmbH (0123) Ridlerstraße 65 80339 München / Germany
Ort, Datum/ Place, date	**Name und Funktion/** Name and function
Wetzlar, 08.05.2015	Qualitätsmanagement / Quality Manager OCULUS Optikgeräte GmbH Eckhard Loh

Questions? Contact FDA/CDRH/OCE/DID at CDRH-FOISTATUS@fda.hhs.gov or 301-796-8118

Records Processed under FOIA request 2016-2167; Released by CDRH on 09/06/2016

21 Technical Data

Measuring equipment

Camera	Digital CCD camera
Light source	Blue LEDs (475 nm, UV-free)
Speed	50 images in 2 seconds, 2760 measuring points per recorded image
Number of evaluated measuring points	max. 138,000)
Dimensions W x D x H (measuring head)	280 x 205 x 450 mm (11.0 x 8.1 x 17.7 in)
Weight (measuring head)	Pentacam® AXL 7,8 kg (17.2 lbs)

Measuring range

Curvature:	3 to 38 mm 9 to 99 D
Accuracy	± 0.1 D
Reproducibility	± 0.1 D
Working distance	80 mm
Axial length	14 to 40 mm

Power adapter

Power adapter HEMG 49 (05150150)	
Mains connection	90 - 264 V AC
Frequency	47 - 63 Hz
Power input, max.	85 VA
Output voltage	24 V DC
Fuses	Integrated overcurrent shut-off

Questions? Contact FDA/CDRH/OCE/DID at CDRH-FOISTATUS@fda.hhs.gov or 301-796-8118

Records Processed under FOIA request 2016-2167; Released by CDRH on 09/06/2016

Power supply Pentacam® AXL

Output voltage	24 V DC
Max. power consumption	37,4 W

Other information

Contraindications	None noted
Lifecycle expectancy	Up to 10 years

Classification according to IEC 60601 – 1

Type of protection against electrical shock	Protection class II
Level of protection against electrical shock	Type B
Level of protection against damaging water entry	IP20

Ambient operating requirements

Temperature	+10 °C to +40 °C
Humidity	30% to 75%
Air pressure	700hPa to 1060hPa

Storage conditions according to DIN EN 60601-1

Ambient temperature range	-10°C to +55°C
Relative humidity, including condensation	10% to 95%
Air pressure range	700 hPa bis 1060 hPa

Transport conditions according to DIN EN 60601-1

Ambient temperature range	-40°C to +70°C
Relative humidity, including condensation	10% to 95%
Air pressure range	500 hPa to 1060 hPa

Questions? Contact FDA/CDRH/OCE/DID at CDRH-FOISTATUS@fda.hhs.gov or 301-796-8108

Records Processed under FOIA request 2016-2167; Released by CDRH on 09/06/2016

Computer

Use a computer which is in conformity with the DIN EN 60950 standard.

Recommended computer specifications	2.7 GHz, 8 GB RAM, 1 TB HDD, Windows® 7, Intel Iris Pro

CE in accordance with EC Directive 93/42/EEC for Medical Devices

The unit is a Class IIa product.

Classifikation according to IEC 60825-1: 2007

The unit contains a Class 1 laser.	
Maximum output of the laser radiation	0.84 mW
Pulse duration	400 ms
Wavelength	880 nm

Questions? Contact FDA/CDRH/OCE/DID at CDRH-FOISTATUS@fda.hhs.gov or 301-796-8118

Records Processed under FOIA request 2016-2167; Released by CDRH on 09/06/2016

22 Annex

22.1 Electromagnetic Compatibility

Medical electrical equipment is subject to special precautionary requirements with respect to EMC, and must be installed and operated according to the EMC-Instructions contained in the accompanying paperwork.

No special measures need be observed in respect of OCULUS devices and systems.

Portable and mobile RF-communications devices can interfere with electrically operated medical devices.

Minimal performance quality and essential performance criteria

- A slightly disturbance of the analog camera of the Pentacam® AXL (slightly image noise on screen) during the examination is permissible because it will not affect the diagnosis, treatment and observation.
- A short flicker of the illumination of the Pentacam® AXL during the examination is permissible because it will not affect the diagnosis, treatment and observation.
- A short interruption of the USB connection during the examination is permissible because it will not affect the diagnosis, treatment and observation.

Attention

The use of accessories, transducers and cables not specified by OCULUS (for example as replacement parts) may result in increased emissions or decreased immunity of the Pentacam® AXL.

➔ Use only the original accessories, transducers and cables specified by OCULUS.

The use of accessories, transducers and cables specified by OCULUS with devices other then the Pentacam® AXL may result in increased emissions or decreased immunity of the other device.

➔ Do not use the accessories, transducers and cables specified by OCULUS with devices other then the Pentacam® AXL.

Questions? Contact FDA/CDRH/OCE/DID at CDRH-FOISTATUS@fda.hhs.gov or 301-796-8108

Records Processed under FOIA request 2016-2167; Released by CDRH on 09/06/2016

To be in compliance with the requirements of the IEC 60601-1-2. 6.1 and 6.2 the following types of equipment, accessories, power adapters and cables must be used.

Order number	Description	
70100	Pentacam® AXL	
05200320	Cable with connector plug, EU standard	2.5 m (98.4 in)
05200210 (110 Volt)	Cable with connector plug, US standard	2.5 m (98.4 in)
05150150	Power adapter HMEG 49	24 V, 2,1A
0277000 00 052 0277000 00 054 0277000 00 056	Y cable	2 m 4 m 6 m

22.2 Guidance and Manufacturer's Declaration - Electromagnetic Emmisssions for the Pentacam® AXL

Guidance and manufacturer´s declaration electromagentic emmissions IEC 60601-1-2, 5.2.2.1, table 1		
The OCULUS Pentacam® AXL is intended for operation in the electromagnetic environment specified below. The user of the Pentacam® AXL should ensure that it is being used in such an environment.		
Emissions test	Compliance	Electromagnetic environment – guidance
RF emissions CISPR 11	Group 1	The Pentacam® AXL uses RF energy only for its internal function. Therefore, its RF emissions are very low and are not likely to cause any interference in nearby electronic equipment.
HF-emissions CISPR 11	Class B	
Harmonics emissions IEC 61000-3-2	Class A	
Voltage fluctuations / flicker emissions IEC 61000-3-3	complies	

Questions? Contact FDA/CDRH/OCE/DID at CDRH-FOISTATUS@fda.hhs.gov or 301-796-8118

Records Processed under FOIA request 2016-2167; Released by CDRH on 09/06/2016

Guidance and manufacturer´s declaration electromagentic immunity, IEC 60601-1-2, 5.2.2.1, table 2

Immunity test	IEC 60601 test level	Compliance level	Electromagnetic environment – guidlines
Electrostatic discharge (ESD) IEC 61000-4-2	± 6 kV contact ± 8 kV air	± 6 kV contact ± 8 kV air	Floors should be made of wood or concrete or covered with ceramic tiles. If the floor is covered with synthetic material, the relative humidity must be at least 30%.
Electrical Fast transient/bursts IEC 61000-4-4	± 2 kV for power supply lines ± 1 kV for input/ output lines	± 2 kV for power supply lines ± 1 kV for input/ output lines	Mains power quality should be that of a typical commercial or hospital environment.
Surge IEC 6100-4-5	± 1 kV kine(s) to line(s) ± 2 kV line(s) to earth	± 1 kV differential mode ± 2 kV line(s) to earth	Mains power quality should be that of a typical commercial or hospital environment.
Voltage dips, short interruptions, and voltage variations on power supply input lines IEC 61000-4-11	< 5% U_τ (> 95% dip in U_τ) for 0,5 cycle 40 % U_τ (60% dip in U_τ) for 5 cycles 70% U_τ (30% dip in U_τ) for 25 cycles <5% U_τ (> 95% dip in U_τ) for 5 s	< 5% U_τ (> 95% dip in U_τ) for 0,5 cycle 40 % U_τ (60% dip in U_τ) for 5 cycles 70% U_τ (30% dip in U_τ) for 25 cycles <5% U_τ (> 95% dip in U_τ) for 5 sec	Mains power quality should be that of a typical commercial or hospital environment. If the user of the Pentacam® AXL requires continued operation during power mains interruptions, it is recommended that the Pentacam® AXL be powered from an uninterruptible power supply or battery.
Power frequency (50/60Hz) magnetic field IEC 61000-4-8	3 A/m	3 A/m	Power frequency magnetic fields should be at levels characteristic of a typical location in a typical commercial or hospital environment.
Note: U_τ is the a.c. mains voltage prior to application of the test level.			

Questions? Contact FDA/CDRH/OCE/DID at CDRH-FOISTATUS@fda.hhs.gov or 301-796-8118

Records Processed under FOIA request 2016-2167; Released by CDRH on 09/06/2016

Guidance and manufacturer´s declaration electromagentic immunity, IEC 60601-1-2, 5.2.2.2, table 4

Immunity test	IEC 60601 test level	Compliance level	Electromagnetic environment – Guidelines
			Portable and mobile RF communications equipment should be used no closer to any part of Pentacam® AXL, including cables, than the recommended separation distance calculated from the equation applicable to the frequency of the transmitter. Recommended separation distance
Conducted RF IEC 61000-4-6	3 Vrms 150 KHz to 80 Mhz	V_{rms}= 3 V	$d = \left[\frac{3,5}{(V_1)}\right]\sqrt{P}$
Radiated RF IEC 61000-4-3	3 V/m 80 MHz to 2.5 GHz	E = 3 V/m	$d = \left[\frac{3,5}{(E_1)}\right]\sqrt{P}$ 80MHz to 800 MHz $d = \left[\frac{7}{(E_1)}\right]\sqrt{P}$ 800 MHz to 2.5 GHz where P is the maximum output power rating of the transmitter in watts (W) according to the transmitter manufacturer and d is the recommended separation distance in metres (m). Field strength from fixed RF transmitters, as determined by an electromagnetic site survey (a), should be less than the compliance level in each frequency range (b). Interface may occur in the vicinity of equipment marked with the following symbol:

Note 1:	At 80 Hz and 800 MHz, the higher frequency range applies.
Note 2:	These guidelines may not apply in all situations. Electromagnetic propagation is affected by absorption and reflection from structures, objects and people.

a. Field strengths from fixed transmitters, such as base stations for radio (cellular/cordless) telephones and land mobile radios, amateur radios, AM and FM radio broadcast, and TV broadcast cannot be predicted theoretically with accuracy. To assess the electromagnetic environment due to fixed RF transmitters, and electromagnetic site survey should be considered. If the measured field strength in the location in which the Pentacam® AXL is used exceeds the applicable RF compliance level above, the Pentacam® AXL should be observed to verify normal operation. If abnormal performance is observed, additional measures may be necessary, such as re-orienting or relocating the Pentacam® AXL.

b. Over the frequency range 150 KHz to 80 MHz, field strengths should be less than 3 V/m.

Questions? Contact FDA/CDRH/OCE/DID at CDRH-FOISTATUS@fda.hhs.gov or 301-796-8118

Records Processed under FOIA request 2016-2167; Released by CDRH on 09/06/2016

Recommended separation distances between portable and mobile RF communications equipment and the Pentacam® AXL, IEC 60601-1-2, 5.2.2.2, table 6

The Pentacam® AXL in intended for us e in an electromagnetic environment in which radiated RF disturbances are controlled. The customer or the user of the Pentacam® AXL can help prevent electromagnetic interference by maintaining a minimum distance between portable and mobile RF communications equipment (transmitters) and the Pentacam® AXL as recommended below, according to the maximum output power of the communications equipment.

Rated maximum output power of transmitter W	Separation distance according to frequency of transmitter m		
	150 KHz to 80 Mhz d= 1.2 √P	80 MHz to 800 MHz d= 1.2 √P	800 MHz to 2.5 GHz d= 2.3 √P
0.01	0.12	0.12	0.23
0.1	0.38	0.38	0.73
1	1.2	1.2	2.3
10	3.80	3.80	7.3
100	12	12	23

For transmitters rated at a maximum output power not listed above, the recommended separation distance d in metres (m) can be estimated using the equation applicable to the frequency of the transmitter, where P is the maximum output power rating of the transmitter in watts (W) according to the transmitter manufacturer.

NOTE 1: At 80 MHz and 800 MHz, the separation distance for the higher frequency range applies.

NOTE 2: These guidelines may not apply in all situations. Electromagnetic propagation is affected by absorption and reflection from structures, objects and people.

Questions? Contact FDA/CDRH/OCE/DID at CDRH-FOISTATUS@fda.hhs.gov or 301-796-8118

Records Processed under FOIA request 2016-2167; Released by CDRH on 09/06/2016

22.3 Description of the Connection

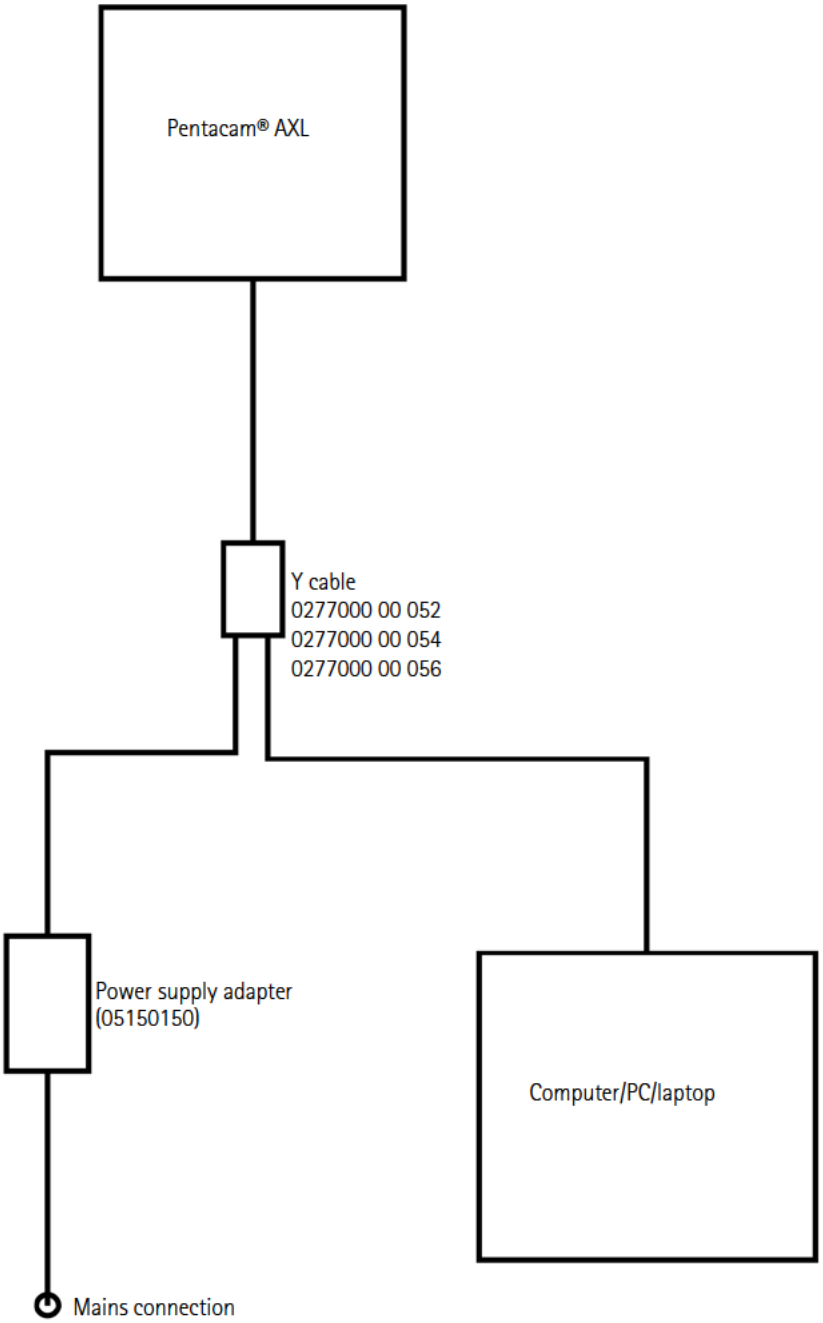

Questions? Contact FDA/CDRH/OCE/DID at CDRH-FOISTATUS@fda.hhs.gov or 301-796-8118

Records Processed under FOIA request 2016-2167; Released by CDRH on 09/06/2016

22.4 Data Sheet HEMG 49-S240210-7 (05150150)

HiTRON

UNIVERSAL INPUT AC-DC MEDICAL & ITE APPLICATION EXTERNAL DESKTOP SWITCHING ADAPTER 48-50 WATTS GREEN POWER SINGLE OUTPUT HEMG49 SERIES

FEATURES:

- ACCOMMODATE UNIVERSAL AC INPUT
- MEET MEDICAL STANDARDS IEC60601 1 & ITE STANDARDS IEC60950 1
- EMI MEET EN 55011 & EN55022 / FCC CLASS B
- MEET ENERGY STAR LEVEL V & CEC LEVEL IV
- CE MARKING COMPLIANCE

SPECIFICATION

INPUT SPECIFICATION

Input Voltage: Typical 90-264Vac.
Input Connector: 3 pole AC inlet IEC320-C14(DT7) / 2 pole AC inlet IEC320-C8(DT8).
Input Frequency: 47-63Hz.
Inrush Current: 12Arms (52Apk) at 230Vac.
Input Current: Typical 0.91A at 115Vac/ 0.57A at 230Vac.
Dielectric Withstand: Meet IEC60601-1 & IEC60950-1.
EMI: Meet EN55011 & EN55022 / FCC Class B.
Hold-up Time: Typical 12mS at 115Vac. Typical 70mS at 230Vac.
Over Temp. Protection: Optional (NTC circuit).
Earth Leakage Current (Class I) : Less than 0.3 mA.
Touch Leakage Current (Class I & II) : Less than 0.1mA.
No Load Power: Less than 0.3W at 230Vac

OUTPUT SPECIFICATION

Output Voltage: See Ratings Chart.
Output Current: See Ratings Chart.
Output Wattage: Typical 48-50Watts.
Output Connector & Cord: Optional.
Line Regulation: Typical 0.1%.
Load Regulation: Typical ±1.5-3.0%.
Noise & Ripple: 1.0% peak to peak.
OVP: Built-in by latch circuit.
Adjustability: Factory set.
Over Current Protection (OCP):
Fully protected against output overload and short circuit. The PSU will shut down after OCP is activated. Consult the factory for OCP setting.

GENERAL SPECIFICATION

Efficiency: Typical 87%-88% (various with the output voltage)
Switching Frequency: Typical 65KHz.
Circuit Topology: Fixed Frequency Flyback circuit.
Transient Response: Output voltage returns in less than 5.5mS following a 50% load change.
Safety Standard: Meet Medical IEC60601-1 & ITE IEC60950-1, Class I for DT7(C14) or Class II for DT8(C8)

Operating Temperature: 0°C to +40°C.
Storage Temperature: -20 to +85°C.
Cooling: Free air convection.
Construction: Impact resistant thermo-plastic enclosure case.
Power Density: 3.14-3.27Watts. / Cubic inch.
Desktop Format.

NOTE: (1) All measurements are at nominal input, full load, and +25°C unless otherwise specified.
(2) Load regulation is measured at 115Vac or 230Vac in percentage to indicate the change in output voltage as the load varied from half load to full load (±%).
(3) The exact obtainable load regulation depends upon the output cord selected and load current.
(4) Due to requests in market and advances in technology, specifications subject to change without notice.

c US c UL us LISTED CE

For the details of safety approval, please consult the factory.

-7-

Questions? Contact FDA/CDRH/OCE/DID at CDRH-FOISTATUS@fda.hhs.gov or 301-796-8118

OUTPUT VOLTAGE / CURRENT RATINGS CHART

SINGLE OUTPUT

MODEL NO.	AC INLET	O/P VOLTAGE	O/P CURRENT
HEMG49-S120400-7	IEC320-C14(DT7)	**12.0Vdc**	4.0A
HEMG49-S120400-8	IEC320-C8(DT8)	**12.0Vdc**	4.0A
HEMG49-S150330-7	IEC320-C14(DT7)	**15.0Vdc**	3.3A
HEMG49-S150330-8	IEC320-C8(DT8)	**15.0Vdc**	3.3A
HEMG49-S240210-7	IEC320-C14(DT7)	**24.0Vdc**	2.1A
HEMG49-S240210-8	IEC320-C8(DT8)	**24.0Vdc**	2.1A

MECHANICAL DIMENSIONS: MM [INCHES] **WEIGHT:** 373.0g (13.2 Oz.)

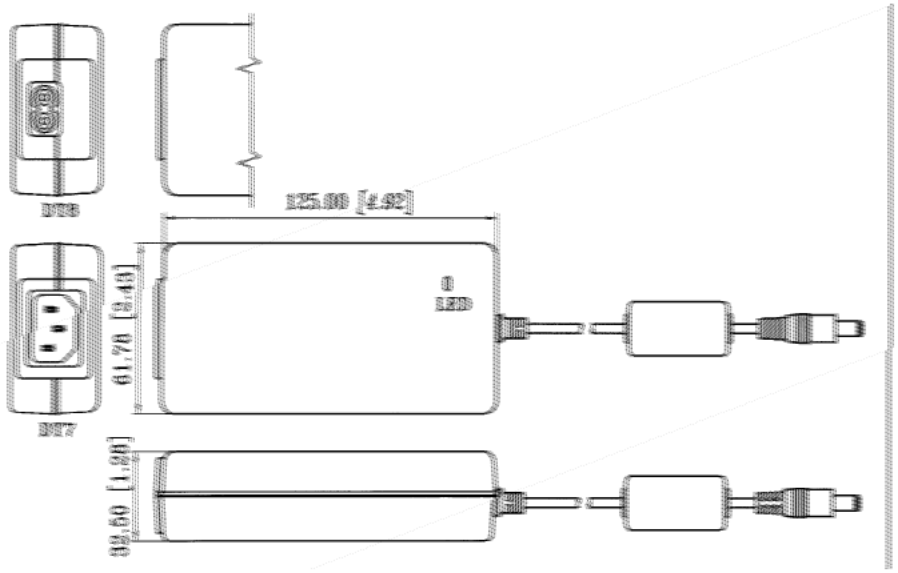

-8-

Questions? Contact FDA/CDRH/OCE/DID at CDRH-FOISTATUS@fda.hhs.gov or 301-796-8118

Records Processed under FOIA request 2016-2167; Released by CDRH on 09/06/2016

Questions? Contact FDA/CDRH/OCE/DID at CDRH-FOISTATUS@fda.hhs.gov or 301-796-8108

Attachment 3

Software Documentation

- **Software Description** (b)(4) [redacted]
- **Software Safety Classification** (b)(4) [redacted]
- **Device Hazard Analysis**
- **Software Requirement Specification (SRS)** (b)(4) [redacted]
- **Software Verification and Validation Record** (b)(4) [redacted]
- **Software Traceability Matrix** (b)(4) [redacted]
- **Software Revision Level History** (b)(4) [redacted]
- **Annex - Release Documents**
    - **Software Change** (b)(4) [redacted]
    - **Software Test Protocol** (b)(4) [redacted]
    - **Software Release** (b)(4) [redacted]

Records Processed under FOIA request 2016-2167; Released by CDRH on 09/06/2016

Software Documentation

Table of contents for FDA 510(k) submission

Software Description (b)(4) 1

Comprehensive overview of the device features that are controlled by the Pentacam software for Pentacam® AXL devices.

Software Safety Classification (b)(4) 2

To assign Software safety according to the possible effects on the patient, operator, or other people resulting from a hazard to which the software can contribute by using the FDA guidance for determining level of concern

Software Requirement Specification (SRS) (b)(4) 3

The Software Requirements Specification (SRS) documents the requirements for the Pentacam software for Pentacam® AXL devices. It defines the deliverables which are to be validated.

Software Verification and Validation Record (b)(4) 4

This document reports the verification and validation of the Pentacam software according the requirements stated in the Software requirements specification of the Pentacam software.

Software Traceability Matrix (b)(4) 5

The Software Traceability Matrix links together product design requirements, design specifications and testing requirements for the Pentacam software for Pentacam® AXL devices.

Software Revision Level History (b)(4) 6

ANNEX – Release Documents 7

Software Change (b)(4)
Software Test Protocol (b)(4)
Software Release (b)(4)

Questions? Contact FDA/CDRH/OCE/DID at CDRH-FOISTATUS@fda.hhs.gov or 301-796-8118

(b)(4) Software Documentation

(b)(4) Software Documentation

(b)(4) Software Documentation

(b)(4) Software Documentation

(b)(4) Software Documentation

(b)(4) Software Documentation

(b)(4) Software Documentation

(b)(4) Software Documentation

(b)(4) Software Documentation

(b)(4) Software Documentation

(b)(4) Software Documentation

(b)(4) Software Documentation

Records Processed under FOIA request 2016-2167; Released by CDRH on 09/06/2016

Device Hazard Analysis

Questions? Contact FDA/CDRH/OCE/DID at CDRH-FOISTATUS@fda.hhs.gov or 301-796-8118

(b)(4)

(b)(4)

(b)(4)

(b)(4)

(b)(4)

(b)(4)

(b)(4)

(b)(4)

(b)(4)

(b)(4)

(b)(4)

(b)(4)

(b)(4)

(b)(4)

(b)(4)

(b)(4)

(b)(4)

(b)(4)

(b)(4)

(b)(4)

(b)(4)

(b)(4)

(b)(4)

(b)(4)

(b)(4)

(b)(4)

(b)(4)

(b)(4)

(b)(4)

(b)(4)

(b)(4)

(b)(4)

(b)(4)

(b)(4)

(b)(4)

(b)(4)

(b)(4)

(b)(4)

(b)(4)

(b)(4)

(b)(4)

(b)(4)

(b)(4)

(b)(4)

(b)(4)

(b)(4)

(b)(4)

(b)(4)

(b)(4)

(b)(4)

(b)(4)

(b)(4)

(b)(4)

(b)(4)

(b)(4)

(b)(4)

(b)(4)

(b)(4)

(b)(4)

(b)(4)

(b)(4)

(b)(4) Software Documentation

(b)(4) Software Documentation

(b)(4) Software Documentation

(b)(4) Software Documentation

(b)(4) Software Documentation

(b)(4) Software Documentation

(b)(4) Software Documentation

(b)(4) Software Documentation

(b)(4) Software Documentation

(b)(4) Software Documentation

(b)(4) Software Documentation

(b)(4) Software Documentation

(b)(4) Software Documentation

(b)(4) Software Documentation

(b)(4) Software Documentation

(b)(4) Software Documentation

(b)(4) Software Documentation

(b)(4) Software Documentation

(b)(4) Software Documentation

(b)(4) Software Documentation

(b)(4) Software Documentation

(b)(4) Software Documentation

(b)(4) Software Documentation

(b)(4) Software Documentation

(b)(4) Software Documentation

(b)(4) Software Documentation

(b)(4) Software Documentation

(b)(4) Software Documentation

(b)(4) Software Documentation

(b)(4) Software Documentation

(b)(4) Software Documentation

(b)(4) Software Documentation

(b)(4) Software Documentation

(b)(4) Software Documentation

(b)(4) Software Documentation

(b)(4) Software Documentation

(b)(4) Software Documentation

(b)(4) Software Documentation

(b)(4) Software Documentation

(b)(4) Software Documentation

(b)(4) Software Documentation

(b)(4) Software Documentation

(b)(4) Software Documentation

(b)(4) Software Documentation

(b)(4) Software Documentation

(b)(4) Software Documentation

(b)(4) Software Documentation

(b)(4) Software Documentation

(b)(4) Software Documentation

(b)(4) Software Documentation

(b)(4) Software Documentation

(b)(4) Software Documentation

(b)(4) Software Documentation

(b)(4) Software Documentation

(b)(4) Software Documentation

(b)(4) Software Documentation

(b)(4) Software Documentation

(b)(4) Software Documentation

(b)(4) Software Documentation

(b)(4) Software Documentation

Annex - Release Documents

- **Software Change** (b)(4) [redacted]
- **Software Test Protocol** (b)(4) [redacted]
- **Software Release** (b)(4) [redacted]

(b)(4) Software Documentation

(b)(4) Software Documentation

(b)(4) Software Documentation

(b)(4) Software Documentation

(b)(4) Software Documentation

(b)(4) Software Documentation

(b)(4) Software Documentation

(b)(4) Software Documentation

(b)(4) Software Documentation

(b)(4) Software Documentation

(b)(4) Software Documentation

(b)(4) Software Documentation

(b)(4) Software Documentation

(b)(4) Software Documentation

(b)(4) Software Documentation

(b)(4) Software Documentation

(b)(4) Software Documentation

(b)(4) Software Documentation

(b)(4) Software Documentation

(b)(4) Software Documentation

(b)(4) Software Documentation

(b)(4) Software Documentation

(b)(4) Software Documentation

(b)(4) Software Documentation

(b)(4) Software Documentation

Records Processed under FOIA request 2016-2167; Released by CDRH on 09/06/2016

Attachment 4

Electrical Safety Test Report

Questions? Contact FDA/CDRH/OCE/DID at CDRH-FOISTATUS@fda.hhs.gov or 301-796-8118

(b)(4)

TEST REPORT

(b)(4)

(b)(4) Third Party Test Data

(b)(4) Third Party Test Data

(b)(4) Third Party Test Data

(b)(4) Third Party Test Data

(b)(4) Third Party Test Data

(b)(4) Third Party Test Data

(b)(4) Third Party Test Data

(b)(4) Third Party Test Data

(b)(4) Third Party Test Data

(b)(4) Third Party Test Data

(b)(4) Third Party Test Data

(b)(4) Third Party Test Data

(b)(4) Third Party Test Data

(b)(4) Third Party Test Data

(b)(4) Third Party Test Data

(b)(4) Third Party Test Data

(b)(4) Third Party Test Data

(b)(4) Third Party Test Data

(b)(4) Third Party Test Data

(b)(4) Third Party Test Data

(b)(4) Third Party Test Data

(b)(4) Third Party Test Data

(b)(4) Third Party Test Data

(b)(4) Third Party Test Data

(b)(4) Third Party Test Data

(b)(4) Third Party Test Data

(b)(4) Third Party Test Data

(b)(4) Third Party Test Data

(b)(4) Third Party Test Data

(b)(4) Third Party Test Data

(b)(4) Third Party Test Data

(b)(4) Third Party Test Data

(b)(4) Third Party Test Data

(b)(4) Third Party Test Data

(b)(4) Third Party Test Data

(b)(4) Third Party Test Data

(b)(4) Third Party Test Data

(b)(4) Third Party Test Data

(b)(4) Third Party Test Data

(b)(4) Third Party Test Data

(b)(4) Third Party Test Data

(b)(4) Third Party Test Data

(b)(4) Third Party Test Data

(b)(4) Third Party Test Data

(b)(4) Third Party Test Data

(b)(4) Third Party Test Data

(b)(4) Third Party Test Data

(b)(4) Third Party Test Data

(b)(4) Third Party Test Data

(b)(4) Third Party Test Data

(b)(4) Third Party Test Data

(b)(4) Third Party Test Data

(b)(4) Third Party Test Data

(b)(4) Third Party Test Data

(b)(4) Third Party Test Data

(b)(4) Third Party Test Data

(b)(4) Third Party Test Data

(b)(4) Third Party Test Data

(b)(4) Third Party Test Data

(b)(4) Third Party Test Data

(b)(4) Third Party Test Data

(b)(4) Third Party Test Data

(b)(4) Third Party Test Data

(b)(4) Third Party Test Data

(b)(4) Third Party Test Data

(b)(4) Third Party Test Data

(b)(4) Third Party Test Data

(b)(4) Third Party Test Data

(b)(4) Third Party Test Data

(b)(4) Third Party Test Data

(b)(4) Third Party Test Data

(b)(4) Third Party Test Data

(b)(4) Third Party Test Data

(b)(4) Third Party Test Data

(b)(4) Third Party Test Data

(b)(4) Third Party Test Data

(b)(4) Third Party Test Data

(b)(4) Third Party Test Data

(b)(4) Third Party Test Data

(b)(4) Third Party Test Data

(b)(4) Third Party Test Data

(b)(4) Third Party Test Data

(b)(4) Third Party Test Data

(b)(4) Third Party Test Data

(b)(4) Third Party Test Data

(b)(4) Third Party Test Data

(b)(4) Third Party Test Data

(b)(4) Third Party Test Data

(b)(4) Third Party Test Data

(b)(4) Third Party Test Data

(b)(4) Third Party Test Data

(b)(4) Third Party Test Data

(b)(4) Third Party Test Data

(b)(4) Third Party Test Data

(b)(4) Third Party Test Data

(b)(4) Third Party Test Data

(b)(4) Third Party Test Data

(b)(4) Third Party Test Data

(b)(4) Third Party Test Data

(b)(4) Third Party Test Data

(b)(4) Third Party Test Data

(b)(4) Third Party Test Data

(b)(4) Third Party Test Data

(b)(4) Third Party Test Data

(b)(4) Third Party Test Data

(b)(4) Third Party Test Data

(b)(4) Third Party Test Data

(b)(4) Third Party Test Data

(b)(4) Third Party Test Data

(b)(4) Third Party Test Data

(b)(4) Third Party Test Data

(b)(4) Third Party Test Data

(b)(4) Third Party Test Data

(b)(4) Third Party Test Data

(b)(4) Third Party Test Data

(b)(4) Third Party Test Data

(b)(4) Third Party Test Data

(b)(4) Third Party Test Data

(b)(4) Third Party Test Data

(b)(4) Third Party Test Data

(b)(4) Third Party Test Data

(b)(4) Third Party Test Data

(b)(4) Third Party Test Data

(b)(4) Third Party Test Data

(b)(4) Third Party Test Data

(b)(4) Third Party Test Data

(b)(4) Third Party Test Data

(b)(4) Third Party Test Data

(b)(4) Third Party Test Data

(b)(4) Third Party Test Data

(b)(4) Third Party Test Data

(b)(4) Third Party Test Data

(b)(4) Third Party Test Data

(b)(4) Third Party Test Data

(b)(4) Third Party Test Data

(b)(4) Third Party Test Data

(b)(4) Third Party Test Data

(b)(4) Third Party Test Data

(b)(4) Third Party Test Data

(b)(4) Third Party Test Data

(b)(4) Third Party Test Data

(b)(4) Third Party Test Data

(b)(4) Third Party Test Data

(b)(4) Third Party Test Data

(b)(4) Third Party Test Data

(b)(4) Third Party Test Data

(b)(4) Third Party Test Data

(b)(4) Third Party Test Data

(b)(4) Third Party Test Data

(b)(4) Third Party Test Data

(b)(4) Third Party Test Data

(b)(4) Third Party Test Data

(b)(4) Third Party Test Data

(b)(4) Third Party Test Data

(b)(4) Third Party Test Data

(b)(4) Third Party Test Data

(b)(4) Third Party Test Data

(b)(4) Third Party Test Data

(b)(4) Third Party Test Data

(b)(4) Third Party Test Data

(b)(4) Third Party Test Data

(b)(4) Third Party Test Data

(b)(4) Third Party Test Data

(b)(4) Third Party Test Data

(b)(4) Third Party Test Data

(b)(4) Third Party Test Data

(b)(4) Third Party Test Data

(b)(4) Third Party Test Data

(b)(4) Third Party Test Data

(b)(4) Third Party Test Data

(b)(4) Third Party Test Data

(b)(4) Third Party Test Data

(b)(4) Third Party Test Data

(b)(4) Third Party Test Data

(b)(4) Third Party Test Data

(b)(4) Third Party Test Data

(b)(4) Third Party Test Data

(b)(4) Third Party Test Data

(b)(4) Third Party Test Data

(b)(4) Third Party Test Data

(b)(4) Third Party Test Data

(b)(4) Third Party Test Data

(b)(4) Third Party Test Data

(b)(4) Third Party Test Data

(b)(4) Third Party Test Data

(b)(4) Third Party Test Data

(b)(4) Third Party Test Data

(b)(4) Third Party Test Data

(b)(4) Third Party Test Data

(b)(4) Third Party Test Data

(b)(4) Third Party Test Data

(b)(4) Third Party Test Data

(b)(4) Third Party Test Data

(b)(4) Third Party Test Data

(b)(4) Third Party Test Data

(b)(4) Third Party Test Data

(b)(4) Third Party Test Data

(b)(4) Third Party Test Data

(b)(4) Third Party Test Data

(b)(4) Third Party Test Data

(b)(4) Third Party Test Data

(b)(4) Third Party Test Data

(b)(4) Third Party Test Data

(b)(4) Third Party Test Data

(b)(4) Third Party Test Data

(b)(4) Third Party Test Data

(b)(4) Third Party Test Data

Records Processed under FOIA request 2016-2167; Released by CDRH on 09/06/2016

Test report

(b)(4)

(b)(4)

(b)(4)

(b)(4)

(b)(4)

(b)(4)

(b)(4)

(b)(4)

(b)(4)

(b)(4)

(b)(4)

(b)(4)

(b)(4)

(b)(4)

(b)(4)

(b)(4)

(b)(4)

(b)(4)

(b)(4)

(b)(4)

(b)(4)

(b)(4)

(b)(4)

(b)(4)

(b)(4)

(b)(4)

(b)(4)

(b)(4)

(b)(4)

(b)(4)

(b)(4)

(b)(4)

(b)(4)

(b)(4)

(b)(4)

(b)(4)

(b)(4)

(b)(4)

(b)(4)

(b)(4)

(b)(4)

(b)(4)

(b)(4)

(b)(4)

(b)(4)

(b)(4)

(b)(4)

(b)(4)

(b)(4)

(b)(4)

(b)(4)

(b)(4)

(b)(4)

(b)(4)

(b)(4)

(b)(4)

(b)(4)

(b)(4)

(b)(4)

(b)(4)

(b)(4)

(b)(4)

(b)(4)

(b)(4)

(b)(4)

Records Processed under FOIA request 2016-2167; Released by CDRH on 09/06/2016

Attachment 7

ISO 15004-2:2007-06: Ophthalmic Instruments - Fundamental Requirements and Test Methods; Part 2: Light Hazard Protection

Questions? Contact FDA/CDRH/OCE/DID at CDRH-FOISTATUS@fda.hhs.gov or 301-796-8118

(b)(4) Third Party Test Data

(b)(4) Third Party Test Data

(b)(4) Third Party Test Data

(b)(4) Third Party Test Data

(b)(4) Third Party Test Data

(b)(4) Third Party Test Data

(b)(4) Third Party Test Data

(b)(4) Third Party Test Data

(b)(4) Third Party Test Data

(b)(4) Third Party Test Data

(b)(4) Third Party Test Data

(b)(4) Third Party Test Data

(b)(4) Third Party Test Data

(b)(4) Third Party Test Data

(b)(4) Third Party Test Data

(b)(4) Third Party Test Data

(b)(4) Third Party Test Data

(b)(4) Third Party Test Data

(b)(4) Third Party Test Data

(b)(4) Third Party Test Data

(b)(4) Third Party Test Data

(b)(4) Third Party Test Data

(b)(4) Third Party Test Data

(b)(4) Third Party Test Data

(b)(4) Third Party Test Data

Records Processed under FOIA request 2016-2167; Released by CDRH on 09/06/2016

Attachment 8

IEC 60825-1, 2007: Safety of Laser Products; Part 1: Equipment Classification, Requirements and User's Guide; Section Two: Manufacturing Requirements

Questions? Contact FDA/CDRH/OCE/DID at CDRH-FOISTATUS@fda.hhs.gov or 301-796-8118

(b)(4) Third Party Test Data

(b)(4) Third Party Test Data

(b)(4) Third Party Test Data

(b)(4) Third Party Test Data

(b)(4) Third Party Test Data

(b)(4) Third Party Test Data

(b)(4) Third Party Test Data

(b)(4) Third Party Test Data

(b)(4) Third Party Test Data

(b)(4) Third Party Test Data

(b)(4) Third Party Test Data

(b)(4) Third Party Test Data

(b)(4) Third Party Test Data

(b)(4) Third Party Test Data

(b)(4) Third Party Test Data

Records Processed under FOIA request 2016-2167; Released by CDRH on 09/06/2016

Attachment 9

ISO 22665:2012 - Ophthalmic Optics and Instruments - Instruments to Measure Axial Distances in the Eye and to Demonstrate Accuracy and Reproducibility in the Stated Measuring Range of 14-40 mm

Questions? Contact FDA/CDRH/OCE/DID at CDRH-FOISTATUS@fda.hhs.gov or 301-796-8118

(b)(4)

(b)(4)

(b)(4)

(b)(4)

(b)(4)

(b)(4)

(b)(4)

(b)(4)

(b)(4)

(b)(4)

(b)(4)

(b)(4)

(b)(4)

(b)(4)

(b)(4)

(b)(4)

(b)(4)

(b)(4)

(b)(4)

Records Processed under FOIA request 2016-2167; Released by CDRH on 09/06/2016

Attachment 10

Protocols for Agreement and Precision Studies

- **Agreement Study 1**
- **Agreement Study 2**
- **Precision Study**

Questions? Contact FDA/CDRH/OCE/DID at CDRH-FOISTATUS@fda.hhs.gov or 301-796-8118

Records Processed under FOIA request 2016-2167; Released by CDRH on 09/06/2016

Agreement Study 1

Questions? Contact FDA/CDRH/OCE/DID at CDRH-FOISTATUS@fda.hhs.gov or 301-796-8118

(b)(4)

(b)(4)

Records Processed under FOIA request 2016-2167; Released by CDRH on 09/06/2016

Agreement Study 2

Questions? Contact FDA/CDRH/OCE/DID at CDRH-FOISTATUS@fda.hhs.gov or 301-796-8118

(b)(4)

(b)(4)

Records Processed under FOIA request 2016-2167; Released by CDRH on 09/06/2016

Precision Study

Questions? Contact FDA/CDRH/OCE/DID at CDRH-FOISTATUS@fda.hhs.gov or 301-796-8118

(b)(4)

(b)(4)

Records Processed under FOIA request 2016-2167; Released by CDRH on 09/06/2016

Attachment 11

Clinical Studies Report

Questions? Contact FDA/CDRH/OCE/DID at CDRH-FOISTATUS@fda.hhs.gov or 301-796-8118

(b)(4)

(b)(4)

(b)(4)

(b)(4)

(b)(4)

(b)(4)

(b)(4)

(b)(4)

(b)(4)

(b)(4)

(b)(4)

(b)(4)

(b)(4)

(b)(4)

(b)(4)

(b)(4)

(b)(4)

(b)(4)

(b)(4)

(b)(4)

(b)(4)

(b)(4)

(b)(4)

(b)(4)

(b)(4)

(b)(4)

(b)(4)

(b)(4)

(b)(4)

(b)(4)

(b)(4)

(b)(4)

(b)(4)

(b)(4)

(b)(4)

(b)(4)

(b)(4)

(b)(4)

(b)(4)

Records Processed under FOIA request 2016-2167; Released by CDRH on 09/06/2016

Hogan Lovells

Hogan Lovells US LLP
Columbia Square
555 Thirteenth Street, NW
Washington, DC 20004
T +1 202 637 5600
F +1 202 637 5910
www.hoganlovells.com

K152311/S001

December 21, 2015

FDA/CDRH/DCC
DEC 21 2015
RECEIVED

By Hand Delivery

U.S. Food and Drug Administration
Center for Devices and Radiological Health
Document Mail Center – WO66-G609
10903 New Hampshire Avenue
Silver Spring, MD 20993-0002

Attn: Bradley Cunningham, MS (WO66 - 2430)

Re: Replacement eCopy for Responses to Request for Additional Information, Dated October 13, 2015, for OCULUS Optikgeräte GmbH's Pentacam® AXL (K152311/S001)

Dear Mr. Cunningham:

On behalf of our client, OCULUS Optikgeräte GmbH ("OCULUS") or "the company," we are submitting the enclosed replacement electronic copy ("eCopy") for the company's response to the Food and Drug Administration's ("FDA" or "the agency") October 13, 2015, Request for Additional Information ("RAI") regarding the company's Pentacam® AXL (K152311/S001).

The company originally submitted a response to the October 13, 2015, RAI on December 18, 2015. The company received an eCopy Hold Letter from FDA the same day. The statistical files that were included in the eCopy were in a folder that was incorrectly titled, "STATISTICAL FILES." The company apologizes for this oversight. In the enclosed eCopy, the folder has been renamed to "STATISTICAL DATA."

A replacement electronic copy ("eCopy") is being provided with this submission, and the replacement eCopy is an exact duplicate of the previously submitted paper copy, except for the statistical data which is included in the "STATISTICAL DATA" folder of the eCopy.

If you have any additional questions regarding the 510(k) notice, please contact me at the phone number below or Lina Kontos at (202) 637-5713.

Sincerely,

Randy Prebula
Partner
Randy.prebula@hoganlovells.com
D +1 (202) 637-6548

283

Hogan Lovells US LLP is a limited liability partnership registered in the District of Columbia. "Hogan Lovells" is an international legal practice that includes Hogan Lovells US LLP and Hogan Lovells International LLP, with offices in: Alicante Amsterdam Baltimore Beijing Brussels Caracas Colorado Springs Denver Dubai Dusseldorf Frankfurt Hamburg Hanoi Ho Chi Minh City Hong Kong Houston Johannesburg London Los Angeles Luxembourg Madrid Mexico City Miami Milan Minneapolis Monterrey Moscow Munich New York Northern Virginia Paris Perth Philadelphia Rio de Janeiro Rome San Francisco São Paulo Shanghai Silicon Valley Singapore Sydney Tokyo Ulaanbaatar Warsaw Washington DC Associated offices: Budapest Jeddah Riyadh Zagreb. For more information see www.hoganlovells.com

Questions? Contact FDA/CDRH/OCE/DID at CDRH-FOISTATUS@fda.hhs.gov or 301-796-8118

Records Processed under FOIA request 2016-2167; Released by CDRH on 09/06/2016

K152311/S001

Hogan Lovells US LLP
Columbia Square
555 Thirteenth Street, NW
Washington, DC 20004
T +1 202 637 5600
F +1 202 637 5910
www.hoganlovells.com

December 18, 2015

By Hand Delivery

FDA/CDRH/DCC
DEC 18 2015
RECEIVED

U.S. Food and Drug Administration
Center for Devices and Radiological Health
Document Mail Center – WO66-G609
10903 New Hampshire Avenue
Silver Spring, MD 20993-0002

Attn: Bradley Cunningham, MS (WO66 - 2430)

Re: Responses to Request for Additional Information, Dated October 13, 2015, for OCULUS Optikgeräte GmbH's Pentacam® AXL (K152311)

Dear Mr. Cunningham:

On behalf of our client, OCULUS Optikgeräte GmbH ("OCULUS" or "the company"), we are submitting the enclosed response to the Food and Drug Administration's ("FDA" or "the agency") October 13, 2015, Request for Additional Information ("RAI") regarding the company's Pentacam® AXL (K152311). OCULUS submitted a 510(k) notice for the Pentacam® AXL on August 14, 2015. The attached document provides the company's response to each of the agency's questions posed in the RAI. The company is responsible for the content of this response.

An electronic copy ("eCopy") is being provided with this submission, and the eCopy is an exact duplicate of the paper copy, except for the statistical data which is included in the "STATISTICAL FILES" folder of the eCopy.

OCULUS Optikgeräte GmbH considers its intent to market the Pentacam® AXL as confidential commercial information. The company has not disclosed its intent to market this device to anyone except its employees, others with a financial interest in the company, its advertising or law firms, and its consultants. The company, therefore requests that FDA not disclose the existence of this application until such time as final action on the submission is taken.

In addition, some of the material in this application may be trade secret or confidential commercial or financial information within the meaning of 21 C.F.R. § 20.61 and therefore not discloseable under the Freedom of Information Act even after the existence of this application becomes public. We ask that you consult with the company as provided in 21 C.F.R. § 20.45 before making any part of this submission publicly available.

We trust that the information in this response provides FDA with the information necessary to address the agency's concerns and find the Pentacam® AXL substantially equivalent to the claimed

Hogan Lovells US LLP is a limited liability partnership registered in the District of Columbia. "Hogan Lovells" is an international legal practice that includes Hogan Lovells US LLP and Hogan Lovells International LLP, with offices in: Alicante Amsterdam Baltimore Beijing Brussels Caracas Colorado Springs Denver Dubai Dusseldorf Frankfurt Hamburg Hanoi Ho Chi Minh City Hong Kong Houston Johannesburg London Los Angeles Luxembourg Madrid Mexico City Miami Milan Minneapolis Monterrey Moscow Munich New York Northern Virginia Paris Perth Philadelphia Rio de Janeiro Rome San Francisco São Paulo Shanghai Silicon Valley Singapore Sydney Tokyo Ulaanbaatar Warsaw Washington DC. Associated offices: Budapest Jeddah Riyadh Zagreb. For more information see www.hoganlovells.com

Questions? Contact FDA/CDRH/OCE/DID at CDRH-FOISTATUS@fda.hhs.gov or 301-796-8116

214

Records Processed under FOIA request 2016-2167; Released by CDRH on 09/06/2016

predicate devices for the listed indications. If you have any additional questions regarding the 510(k) notice, please contact me at the phone number below or Lina Kontos at (202) 637-5713.

Sincerely,

Randy Prebula
Partner
Randy.Prebula@hoganlovells.com
D +1 (202) 637-6548

Attachments

cc: Eckhard Loh, OCULUS Optikgeräte GmbH
Lina Kontos, Hogan Lovells US LLP

Questions? Contact FDA/CDRH/OCE/DID at CDRH-FOISTATUS@fda.hhs.gov or 301-796-8118

Records Processed under FOIA request 2016-2167; Released by CDRH on 09/06/2016

Hogan Lovells US LLP
Columbia Square
555 Thirteenth Street, NW
Washington, DC 20004
T +1 202 637 5600
F +1 202 637 5910
www.hoganlovells.com

December 18, 2015

By Hand Delivery

U.S. Food and Drug Administration
Center for Devices and Radiological Health
Document Mail Center – WO66-G609
10903 New Hampshire Avenue
Silver Spring, MD 20993-0002

Attn: Bradley Cunningham, MS (WO66 - 2430)

Re: Responses to Request for Additional Information, Dated October 13, 2015, for OCULUS Optikgeräte GmbH's Pentacam® AXL (K152311)

Dear Mr. Cunningham:

On behalf of our client, OCULUS Optikgeräte GmbH ("OCULUS" or "the company"), we are submitting the enclosed response to the Food and Drug Administration's ("FDA" or "the agency") October 13, 2015, Request for Additional Information ("RAI") regarding the company's Pentacam® AXL (K152311). OCULUS submitted a 510(k) notice for the Pentacam® AXL on August 14, 2015. The attached document provides the company's response to each of the agency's questions posed in the RAI. The company is responsible for the content of this response.

An electronic copy ("eCopy") is being provided with this submission, and the eCopy is an exact duplicate of the paper copy, except for the statistical data which is included in the "STATISTICAL FILES" folder of the eCopy.

OCULUS Optikgeräte GmbH considers its intent to market the Pentacam® AXL as confidential commercial information. The company has not disclosed its intent to market this device to anyone except its employees, others with a financial interest in the company, its advertising or law firms, and its consultants. The company, therefore requests that FDA not disclose the existence of this application until such time as final action on the submission is taken.

In addition, some of the material in this application may be trade secret or confidential commercial or financial information within the meaning of 21 C.F.R. § 20.61 and therefore not discloseable under the Freedom of Information Act even after the existence of this application becomes public. We ask that you consult with the company as provided in 21 C.F.R. § 20.45 before making any part of this submission publicly available.

We trust that the information in this response provides FDA with the information necessary to address the agency's concerns and find the Pentacam® AXL substantially equivalent to the claimed

Hogan Lovells US LLP is a limited liability partnership registered in the District of Columbia. "Hogan Lovells" is an international legal practice that includes Hogan Lovells US LLP and Hogan Lovells International LLP, with offices in: Alicante Amsterdam Baltimore Beijing Brussels Caracas Colorado Springs Denver Dubai Dusseldorf Frankfurt Hamburg Hanoi Ho Chi Minh City Hong Kong Houston Johannesburg London Los Angeles Luxembourg Madrid Mexico City Miami Milan Minneapolis Monterrey Moscow Munich New York Northern Virginia Paris Perth Philadelphia Rio de Janeiro Rome San Francisco São Paulo Shanghai Silicon Valley Singapore Sydney Tokyo Ulaanbaatar Warsaw Washington DC Associated offices: Budapest Jeddah Riyadh Zagreb. For more information see www.hoganlovells.com

Questions? Contact FDA/CDRH/OCE/DID at CDRH-FOISTATUS@fda.hhs.gov or 301-796-8118

predicate devices for the listed indications. If you have any additional questions regarding the 510(k) notice, please contact me at the phone number below or Lina Kontos at (202) 637-5713.

Sincerely,

Randy Prebula
Partner
Randy.Prebula@hoganlovells.com
D +1 (202) 637-6548

Attachments

cc: Eckhard Loh, OCULUS Optikgeräte GmbH
Lina Kontos, Hogan Lovells US LLP

OCULUS Optikgeraete GmbH Response to October 13, 2015, Request for Additional Information
Pentacam® AXL (K152311)

Statistical

1. (b)(4) [redacted]

Company Response:

(b)(4) [redacted]

Records Processed under FOIA request 2016-2167; Released by CDRH on 09/06/2016

(b)(4)

[redacted]

(b)(4)

Company Response:

(b)(4)

Company Response:

(b)(4)

(b)(4)

[redacted]

(b)(4)

(b)(4)

Company's Response:

(b)(4)

(b)(4)

Company's Response:

(b)(4)

Company's Response:

(b)(4)

Company's Response:

(b)(4)

Company's Response:

(b)(4)

(b)(4)

Company's Response:

(b)(4)

Company's Response:

(b)(4)

(b)(4)

Company's Response:

(b)(4)

Company's Response:

(b)(4)

(b)(4)

Company's Response:

(b)(4)

Records Processed under FOIA request 2016-2167; Released by CDRH on 09/06/2016

Attachment 1

Re-Calculated Agreement and Precision Data

(b)(4) Test Data

(b)(4) Test Data

(b)(4) Test Data

(b)(4) Test Data

(b)(4) Test Data

(b)(4) Test Data

(b)(4) Test Data

(b)(4) Test Data

(b)(4) Test Data

(b)(4) Test Data

(b)(4) Test Data

(b)(4) Test Data

(b)(4) Test Data

(b)(4) Test Data

(b)(4) Test Data

(b)(4) Test Data

(b)(4) Test Data

(b)(4) Test Data

(b)(4) Test Data

(b)(4) Test Data

(b)(4) Test Data

(b)(4) Test Data

(b)(4) Test Data

(b)(4) Test Data

Records Processed under FOIA request 2016-2167; Released by CDRH on 09/06/2016

Attachment 3

Revised Instruction Manual

Records Processed under FOIA request 2016-2167; Released by CDRH on 09/06/2016

OCULUS | Pentacam® AXL

INSTRUCTION MANUAL

System for measuring and analysing the front part of the eye

OCULUS®

Questions? Contact FDA/CDRH/OCE/DID at CDRH-FOISTATUS@fda.hhs.gov or 301-796-8118

Records Processed under FOIA request 2016-2167; Released by CDRH on 09/06/2016

Notes on this instruction manual

The Pentacam® AXL has been manufactured and tested according to strict quality criteria.

To ensure safe operation, it is essential that you use the device correctly. For this reason you should familiarise yourself thoroughly with the contents of this instruction manual before operating the device. In particular, pay attention to the safety instructions.

- This instruction manual describes how to manage patient data, the default settings of the Pentacam® program and the measuring process.
- The Pentacam® AXL reference manual contains information supplementing the description of the operating concept.

Due to ongoing development, the diagrams shown may depict minor changes to the actual device delivered.

If you have any queries or would like additional information about your device, do not hesitate to call or send us an email or a fax. Our service team will gladly assist.

OCULUS Optikgeräte GmbH

OCULUS is certified according to DIN EN ISO 13485, setting high standards of quality where development, manufacture, quality assurance and service regarding the entire range of products are concerned.

 Questions? Contact FDA/CDRH/OCE/DID at CDRH-FOISTATUS@fda.hhs.gov or (301) 796-8118

Records Processed under FOIA request 2016-2167; Released by CDRH on 09/06/2016

Table of Contents

1 Delivery and Deliverables 1
1.1 Software Version 2
2 Graphic Symbols on the Equipment 3
3 Structure of the Documentation 4
4 Safety Instructions 5
4.1 About this Manual 5
4.1.1 Pictograms Used in this Manual 5
4.2 Safety Instructions for Use 6
5 Indications for Use 12
6 Device Description 13
6.1 How the Pentacam® AXL works 14
7 Setup and Connection 15
7.1 Electrical Connection 16
7.2 Switching On 17
7.3 Switching Off 17
7.4 Software Installation on separate PCs 17
8 Patient Data Management 18
8.1 Starting Patient Data Management 18
8.1.1 Entering a New Patient 19
8.1.2 Selecting an Existing Patient 19
8.2 Starting the Pentacam® AXL Software 20
9 Pentacam® AXL Program 21
10 Scan Menu 23
10.1 Screen layout 23
10.1.1 Scheimpflug image settings 24
10.2 Information for recording Scheimpflug images 26
11 Measuring Procedure 27
12 Quality Specifications 32
13 Managing Patient Data 35
13.1 Rename Patient Data 35
13.2 Exporting Patient Data 35
13.3 Importing Patient Data 37
13.4 Data Backup 38
13.4.1 Backup Data 39
13.4.2 Reconstructing Data 39
13.4.3 Automatic Backup 40
14 Test measurements with the Pentacam® AXL 41
15 Cleaning, Disinfection and Maintenance 42
15.1 Cleaning 42

Questions? Contact FDA/CDRH/OCE/DID at CDRH-FOISTATUS@fda.hhs.gov or 301-796-8118

Records Processed under FOIA request 2016-2167; Released by CDRH on 09/06/2016

15.2 Disinfection 43
15.3 Maintenance 44
15.4 Attaching Paper to the Chin Rest 45
16 Troubleshooting 46
17 Transport and Storage 47
17.1 Information on Transport and Storage 47
17.2 Disassembly 47
17.3 Transport and Storage 48
18 Disposal 49
19 Terms of Warranty and Servicing 49
19.1 Terms of Warranty 49
19.2 Assumption of Liability for Functions and Damage 50
19.3 Manufacturer and Service Address 50
20 Declaration of Conformity 51
21 Technical Data 52
22 Annex 55
22.1 Electromagnetic Compatibility 55
22.2 Guidance and Manufacturer's Declaration - Electromagnetic Emmisssions for the Pentacam® AXL 56
22.3 Description of the Connection 60
22.4 Data Sheet HEMG 49-S240210-7 (05150150) 61
22.5 Clinical Studies 63

iii / iii Questions? Contact FDA/CDRH/OCE/DID at CDRH-FOISTATUS@fda.hhs.gov or 301-796-8118

Records Processed under FOIA request 2016-2167; Released by CDRH on 09/06/2016.

1 Delivery and Deliverables

Component	Order number
Pentacam®	70100
Pentacam® accessories	70701
■ x-y base	-
■ Power supply	05150150
■ Dark sheet	027070000006
■ Washing manual	027070000007
■ Wire clip	027075000004
■ Hexagon screwdriver	05520010
Additional Export package with head- and chinrest	70734
■ Support plate	017051501012
■ Cograil	027051701004
■ Cover	027051701005
■ Sliding plate	017051701006
■ Chinrest paper	65313
■ Head and chin rest	70518
■ Instruction Manual	G / 70100 / xxxx/en
■ User Guide	UG / 70700 / xxxx/ en
■ Software Installation	SI/50000/xxxx/en
Additional accessories:	
■ Dustcover	026010005001
■ Y-cable 2 m	027700000052
■ Y-cable2 m	027700000054
■ Y-cable 2 m	027700000056
■ Stromkabel	
■ Cable	

Software-Modul	Bestellnummer
Standard software package Pentacam®:	
■ Floating License Key	77900
with manual	SI/77900/.../de
■ Viewing License Pentacam®	-
■ Indice report software modul	-
■ Pentacam® Data-USB-Stick	

Questions? Contact FDA/CDRH/OCE/DID at CDRH-FOISTATUS@fda.hhs.gov or 301-796-8118

Records Processed under FOIA request 2016-2167; Released by CDRH on 09/06/2016

Optional software module	Order number
Contactlens Software Modul	
Phake IOL Simulation Softwaremodul	
Modul Belin/Ambrosio Enhanced Ectasia	
Holladay Report and EKR detail report	
Module DICOM PACS	
Software Package Cataract ■ Catarakt Software ■ Software licensez PNS and 3D lens ■ Modul Zernike Display	
Refractive Software Package ■ Refractive Software ■ Corneal Densitometry Software modul	

We reserve the right to change the scope of delivery in line with ongoing technical development.

➔ If you find transport damage upon delivery, immediately file a claim with the transport company.

➔ Have the damages noted on the bill of lading, so that your claim for damages can be handled properly.

For more information regarding shipping and handling, see *sect. 17, page 47*.

1.1 Software Version

- Patient data management: version 6.08
- Pentacam® AXL software: version V1.20b15

Precaution

- The software version of the patient data management appears in the settings of the patient data management software.
- The software version of the Pentacam® AXL program appears in the Pentacam® settings.

Questions? Contact FDA/CDRH/OCE/DID at CDRH-FOISTATUS@fda.hhs.gov or 301-796-8118

Records Processed under FOIA request 2016-2167; Released by CDRH on 09/06/2016

2 Graphic Symbols on the Equipment

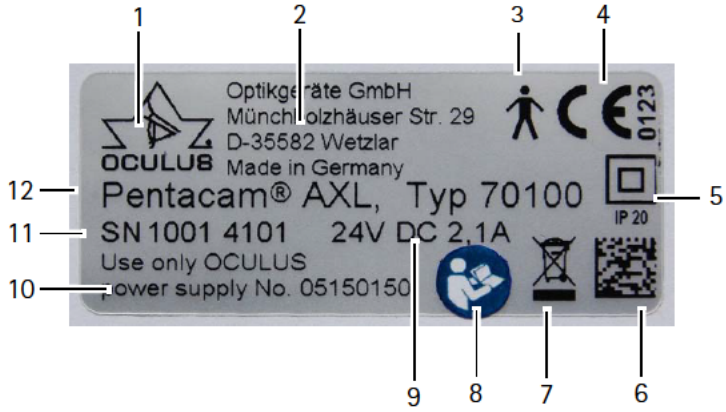

1	*Company logo*	7	*Disposal in household trash is prohibited*
2	*Company address*	8	*Heed Instructions Manual*
3	*Type B unit*	9	*Power supply voltage*
4	*CE Conformité Européenne*	10	*Power supply no*
5	*Protection class and degree of protection*	11	*Serial number of the device*
6	*Matrix for device identification*	12	*Device name and device number*

Fig. 2-1: Symbols

Graphic symbol on Y-cable

wireless technology via USB is not intended

Graphic symbols on packaging

keep dry

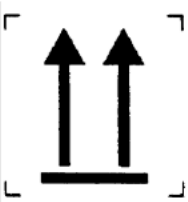

this way up

fragile

Transport

permitted temperature range: transport

Storage

permitted temperature range: storage

Questions? Contact FDA/CDRH/OCE/DID at CDRH-FOISTATUS@fda.hhs.gov or 301-796-8118

Records Processed under FOIA request 2016-2167; Released by CDRH on 09/06/2016

3 Structure of the Documentation

A folder containing documentation is supplied with your Pentacam® AXL:

- **Instruction Manual:** The design of the unit is described in detail in this document. The instruction manual also gives you general information about working with the Patient Data Management system and all safety-related instructions for use of the Pentacam® AXL.

Warning

All safety-related instructions for use of the Pentacam® AXL are given in the Instruction Manual for the unit. It is imperative that you read and understand the whole Instruction Manual before you use the Pentacam® AXL.

- **User Guide:** All features of the examination and analysis software are described in the User Guide, along with detailed information about the Patient Data Management system.
- **Software Installation:** The introduction to the Software Installation describes how to install the Pentacam® AXL software and the associated drivers.
- Manual Floating License Key: information on the use of the Pentacam® AXL within networks.

Questions? Contact FDA/CDRH/OCE/DID at CDRH-FOISTATUS@fda.hhs.gov or (301-796-8118

Records Processed under FOIA request 2016-2167; Released by CDRH on 09/06/2016

4 Safety Instructions

4.1 About this Manual

- ➔ Carefully read through the Instruction Manual.
- ➔ Keep the Instruction Manual in good condition near the device.
- ➔ Observe the legal regulations with regard to accident prevention.

4.1.1 Pictograms Used in this Manual

Warning

Describes serious reactions and potential safety hazards, limitations in use imposed by them, and steps that should be taken if they occur.

Note

Denotes situations which could result in incorrect findings, denotes user instructions and useful or other important information.

Precaution

Include information regarding any special care to be exercised by the practitioner and/or patient for the safe and effective use of the device.

> This symbol denotes menu paths and screen shots. Example for starting a new examination:
>
> Pentacam® AXL > Examination > Scan
>
> which means:
>
> - ➔ Select the "Examination" menu from the menu bar.
> - ➔ Select the menu item "Scan".

Questions? Contact FDA/CDRH/OCE/DID at CDRH-FOISTATUS@fda.hhs.gov or 301-796-8118

Records Processed under FOIA request 2016-2167; Released by CDRH on 09/06/2016

4.2 Safety Instructions for Use

Warning

Personal injury or property damage due to improper operation

➔ Observe the following safety instructions.

Personal injury or property damage due to equipment modifications that could jeopardize safety

➔ No modifications may be made to this device without the permission of the manufacturer. Only the OCULUS service and authorized dealers are allowed to modify the device or the associated lifting table.

Instructions for Operating Personnel

➔ Make certain that the Pentacam® AXL is used exclusively in clinics and by eye specialists and opticians. It must be used in the area designated for carrying out examinations.

For this reason the device may only be operated by personnel instructed to do so, who, with appropriate training, knowledge and practical experience, are able to ensure proper handling of the device.

Transport and Storage Instructions

Refer to the notes in *sect. 17, page 47*.

Instructions for Setup and Connection

➔ Only OCULUS or an authorized dealer is allowed to set up and to connect the Pentacam® AXL.

➔ Do not use or store the Pentacam® AXL in rooms that are humid, see *sect. 17, page 47*.

➔ Keep the Pentacam® AXL away from water that may drip, splash or spray on it, and make sure that no liquids can get into the Pentacam® AXL. Do not place any containers holding liquids in the vicinity of the Pentacam® AXL.

➔ Germany: Only operate the Pentacam® AXL in rooms used for medical purposes after they have been set up according to the VDE Regulation 0100-710.

➔ Do not operate the devices included in the delivery in areas where explosions may occur, or in proximity to flammable anesthetics or volatile substances such as alcohol, benzine or similar products.

➔ Set up the Pentacam® AXL so that the power plug is easy to access. That way, you can easily disconnect it from the power supply for any repairs or maintenance work.

Questions? Contact FDA/CDRH/OCE/DID at CDRH-FOISTATUS@fda.hhs.gov or (301) 796-8118

Records Processed under FOIA request 2016-2167; Released by CDRH on 09/06/2016

- Do not force any plug connections.

  If you are unable to make a plug connection, check whether the plug fits the socket.

  If you detect damage to the connection, you should let authorized dealer repair the damage.
- Only use a device which is mounted at the lifting table properly.

Precaution

- Do not use the Pentacam® AXL with wireless technology, for example with wireless USB.

- **Data responsibility:** The device itself is not designed to connect with the internet, but only with a PC. It does not require the internet to function.

  Do not connect with the internet while using the device. It is considered misuse.

  If you elect to connect the PC to the internet for other purposes you are responsible for ensuring data security.

Patient environment information

Patient environment is the area where patients can come into contact with any part of a medical electrical equipment (ME equipment) or with another person being in contact with the ME equipment.

Questions? Contact FDA/CDRH/OCE/DID at CDRH-FOISTATUS@fda.hhs.gov or 301-796-8118

Records Processed under FOIA request 2016-2167; Released by CDRH on 09/06/2016

In the patient environment, use devices that conform to IEC 60601-1. If a multiple power socket is to be used, or if a device is to be used that does not meet the IEC 60601-1 standard, use an isolating transformer.

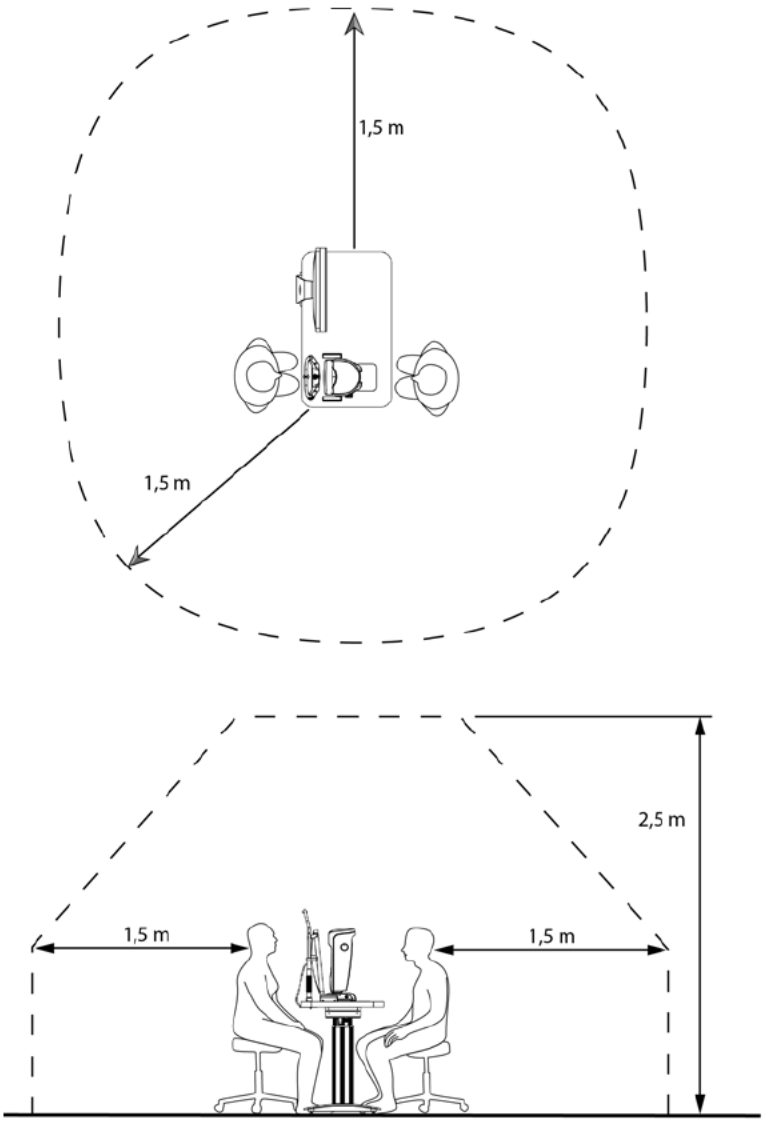

Fig. 4-1: Patient environment

Information about the operation of an ME system

The Pentacam® AXL and a connected computer form a medical electrical system (ME system) according to DIN EN 60601-1. If you connect additional devices, such as, for example a printer, those devices become part of the ME system.

➔ Make sure that all devices of the ME system meet the requirements of IEC 60601-1 or IEC 60950-1.

Questions? Contact FDA/CDRH/OCE/DID at CDRH-FOISTATUS@fda.hhs.gov or (301) 796-8118

Records Processed under FOIA request 2016-2167; Released by CDRH on 09/06/2016

Instructions for Operation

- Before first use: Let OCULUS or an authorized dealer train you in the operation of the Pentacam® AXL.
- Never operate a damaged Pentacam® AXL.
- Only operate the Pentacam® AXL with the original accessories supplied by us and only when the unit is in technically perfect condition.
- Do not cover the ventilation openings.
- Do not touch the patient and the device at the same time.
- Make sure that the device cannot tip over by leaning against it or sitting on it.
- Only operate the device if you have understood the operating instructions.

Instructions for Maintenance

Warning

Risk of personal injury or material damage due to invisible laser radiation

The Pentacam® AXL contains a Class 1 laser according to IEC 60825-1: 2007. It is an encapsulated laser system. When the Pentacam® AXL cover is opened, you may be exposed to invisible, Class 3R (5 mW) laser radiation.

- Never open the unit.
- For authorized service personnel only: When doing maintenance jobs, avoid looking directly into the laser beam.

To ensure satisfactory and reliable operation, we strongly recommend that you have the Pentacam® AXL checked every two years or after 25000 examinations by our service department or an authorized dealer. A corresponding message appears, see *sect. 15.3, page 44*.

If an error occurs which you cannot correct, label the Pentacam® AXL as being "out-of-order" and contact our service department, see *sect. 19, page 49*.

Instructions for Disassembly and Disposal

- When disconnecting electrical connections, pull on the respective plug and not on the cable itself.
- Dispose of the device according to legal regulations.

Questions? Contact FDA/CDRH/OCE/DID at CDRH-FOISTATUS@fda.hhs.gov or 301-796-8118

Records Processed under FOIA request 2016-2167; Released by CDRH on 09/06/2016

Instructions on Electrical Safety

Warning

Risk of personal injury or damage to property due to an incorrect level of safety

Connecting the Pentacam® AXL with its non-medical electrical equipment (e.g. data processing equipment) to a medical electrical system must not result in a patient safety level below that prescribed by DIN EN ISO 60601-1. If making this connection leads to the leakage current threshold being exceeded, protective measures including a circuit breaker must be in place.

- ➔ Ensure that connections with non-medical devices are made correctly.
- ➔ Only use the power adapter listed in the packing list.
- ➔ Use only a computer that meets the specifications given in this instruction manual, *sect. 22, page 55*.

Use of a multiple socket extension cord

Risk of personal injury or material damage caused by unsafe multiple socket extension cord

If you use a multiple socket extension cord to connect the Pentacam® AXL to the power supply, you must heed the following information:

- ➔ Use an extension cord that complies with the requirements of DIN EN ISO 60601-1: 20005, section 16.
- ➔ Do not place the multiple socket extension cord on the floor.
- ➔ Do not use more than one multiple socket extension cord.
- ➔ Plug only the Pentacam® AXL and the computer that is being used with the unit (if applicable) into the multiple socket extension cord.

If you are using a multiple socket extension chord it has to be supplied with a isolation transformer.

If you are using a new computer for the Pentacam® AXL, you must have the electrical safety checked. Call OCULUS Service for this purpose.

Questions? Contact FDA/CDRH/OCE/DID at CDRH-FOISTATUS@fda.hhs.gov or (301) 796-8118

Records Processed under FOIA request 2016-2167; Released by CDRH on 09/06/2016

Warning

Electromagnetic Compatibility (EMC) / Cables

Risk of personal injury or damage to property due to electromagnetic interference

Portable and mobile RF communications equipment can affect medical electrical equipment *sect. 22, page 55*.

- ➔ Make sure that portable and mobile RF communications equipment do not cause interference.
- ➔ Recommendation: Maintain a minimum distance of 4 m. If the distance is shorter, you must ensure that the Pentacam® AXL functions correctly.

Questions? Contact FDA/CDRH/OCE/DID at CDRH-FOISTATUS@fda.hhs.gov or 301-796-8118

Records Processed under FOIA request 2016-2167; Released by CDRH on 09/06/2016

5 Indications for Use

Warning

Federal law restricts this device to sale by or on the order of a physician.

The OCULUS Pentacam® AXL is designed to take photos of the anterior segment of the eye which includes the cornea, pupil, anterior chamber and lens of the eye. To evaluate:

- corneal shape,
- analyse condition of the lens (opaque crystalline lens),
- analyse the anterior chamber angle,
- analyse anterior chamber depth,
- analyse the volume of the anterior chamber,
- analyse anterior or posterior cortical opacity,
- analyse the location of cataracts (nuclear, subcapsular and or cortical), using cross slit images with densitometry,
- corneal thickness,
- axial length,
- white-to-white distance.

The OCULUS Pentacam® AXL also performs calculations to assist physicians in determining the power of the intraocular lens for implantation.

Make certain that the Pentacam® AXL is used exclusively in clinics and by eye specialists and opticians. It must be used in the area designated for carrying out examinations.

The Pentacam® AXL may only be used for the purpose described in this instruction manual.

➔ Heed the safety instructions listed above.

Contraindication

not known

Questions? Contact FDA/CDRH/OCE/DID at CDRH-FOISTATUS@fda.hhs.gov or (301) 796-8118

Records Processed under FOIA request 2016-2167; Released by CDRH on 09/06/2016

6 Device Description

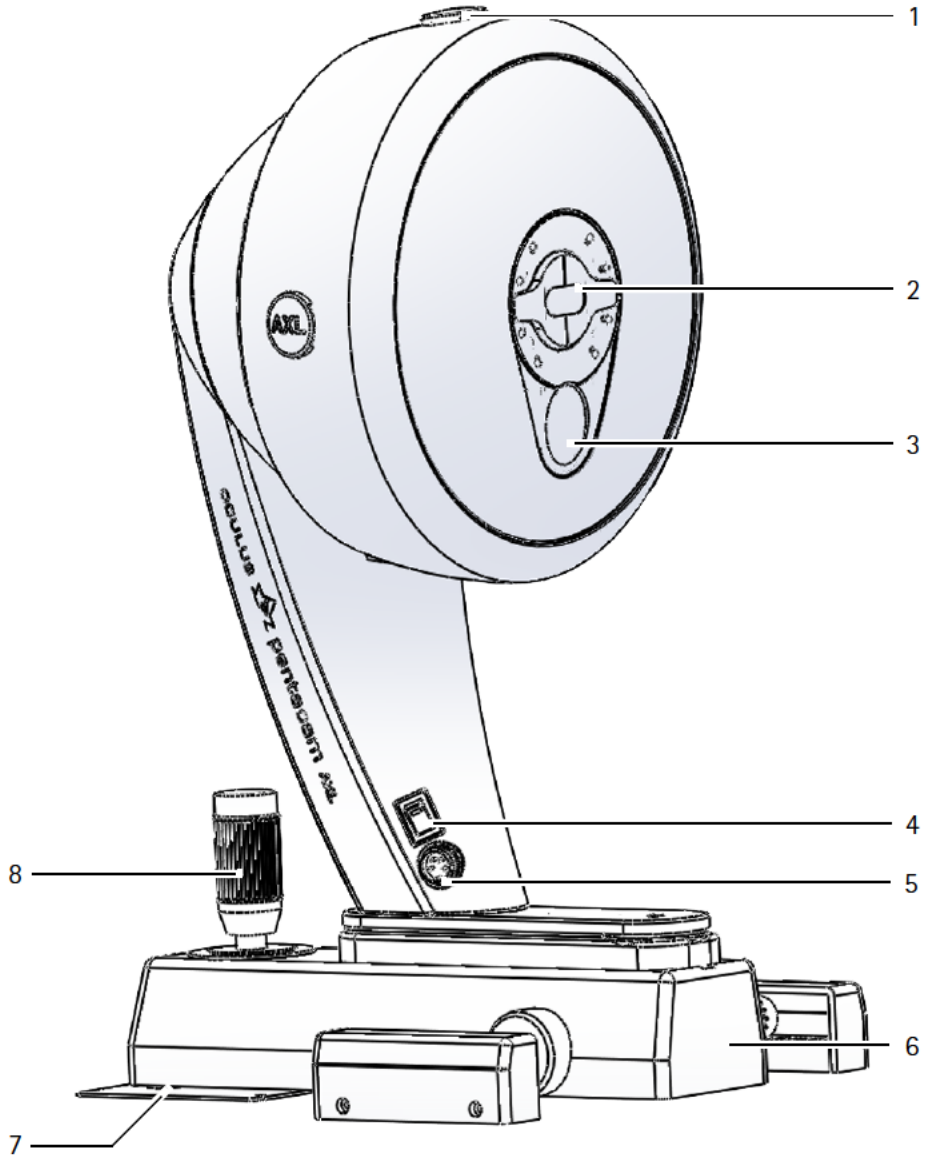

1 Ventilation opening
2 Measuring window
3 Camera opening
4 On/off switch with indicator light
5 Y-cable connector
6 Cross slide
7 Sliding plate with circular markings
8 Joystick

Fig. 6-1: Device components

Questions? Contact FDA/CDRH/OCE/DID at CDRH-FOISTATUS@fda.hhs.gov or 301-796-8118

Records Processed under FOIA request 2016-2167; Released by CDRH on 09/06/2016

6.1 How the Pentacam® AXL works

While rotating around the eye, the Pentacam® AXL captures Scheimpflug images of the anterior eye segment through varying axes. The Scheimpflug images created during an examination are transmitted to the connected PC.

The axial length of the eye is measured by interferometry.

Scheimpflug images can be captured within maximum two seconds.

Up to 138,000 genuine height values are measured and analysed from the Scheimpflug images.

The Scheimpflug images are the basis for the height data which are used to calculate a mathematical 3D model of the anterior eye segment. At same time any eye movements are recorded and taken into account.

A quality specification (QS) lets you gauge the quality of the measurement taken.

The mathematical 3D model, corrected for eye movements, provides the basis for all subsequent analysis.

The topography of the front and rear surfaces of the cornea and the pachymetry are calculated and displayed from limbus to limbus for the entire surface of the cornea.

An analysis of the anterior chamber provides the basis for calculating the chamber angle, chamber volume and chamber depth.

Densitometry of the cornea and lens automatically produces quantified values.

Colour images displayed on the screen show the results of the measurement.

A rotatable 3D model displays the front and rear surfaces of the cornea, the iris and the lens.

Warning

OCULUS Optikgeräte GmbH shall not be liable in any form for further use of the data recorded by a Pentacam® and for the evaluations it has calculated.

Questions? Contact FDA/CDRH/OCE/DID at CDRH-FOISTATUS@fda.hhs.gov or (301) 796-8118

Records Processed under FOIA request 2016-2167; Released by CDRH on 09/06/2016

7 Setup and Connection

Warning

Risk of incorrect measurements/equipment damage due to improper setup

➔ Before first use, make sure the installation and connection of the Pentacam® AXL are completed by our service or by a professional authorized by OCULUS.

Note

➔ Do not expose the Pentacam® AXL to any vibrations, shocks, contaminants, moisture, or high temperatures.

➔ Handle the optical device with care.

➔ Set up the Pentacam® AXL so that the power plug is easy to access. That way, you can easily disconnect it from the power supply for any repairs or maintenance work.

➔ Place the device so that direct light cannot affect the measurement.

➔ Make sure the examination is free from light reflections. To achieve this, darken the examination room.

Ambient temperature

The ambient conditions for operation are given in *sect. 21, page 52*.

➔ Before installing the Pentacam® AXL, consider the transport, storage and current room temperature, where the device is to be installed.

The difference between the temperature of the installation room and the storage and transport temperature should not be more than 10°C to avoid fogging of the internal optics.

➔ If the difference in temperature is greater than 10° C, leave the system at least for 6 hours until the temperature of the instrument has adapted to room temperature.

Questions? Contact FDA/CDRH/OCE/DID at CDRH-FOISTATUS@fda.hhs.gov or 301-796-8118

Records Processed under FOIA request 2016-2167; Released by CDRH on 09/06/2016

7.1 Electrical Connection

Warning

Electrical safety hazard

- Do not use the Pentacam® AXL adjacent to or stacked with other equipment.
- If you have to use the Pentacam® AXL adjacent to or stacked with other equipment, verify the correct operation of the Pentacam® AXL.
- Only use the power adapter listed in the list, *sect. 22.1, page 55*.
- If you use a power strip to connect the Pentacam® AXL: Use a power strip that complies with the requirements of DIN EN 60601-1.
- Do not place the multiple socket extension cord on the floor.
- Do not use more than one multiple socket extension cord.
- Plug only the Pentacam® AXL and the computer that is being used with the unit (if applicable) into the multiple socket extension cord.
- Use a socket with a protective earth connection which is fully operating.

Abb. 7-1: Connecting

- Plug the connector of the Y cable into the jack and tighten the connection. Make sure that the plug is inserted in the correct position.

Note

Risk of equipment damage due to incorrect connection

If you do not connect the Pentacam® AXL properly, and the connection is live, the unit can be damaged within a short period of time.

- Do not use excessive force when connecting the electrical plug.

Questions? Contact FDA/CDRH/OCE/DID at CDRH-FOISTATUS@fda.hhs.gov or (301-796-8118

Records Processed under FOIA request 2016-2167; Released by CDRH on 09/06/2016

➔ Please pay attention to the specifications on the nameplate.

If the electrical plug is damaged, contact our service department or an authorized dealer to repair the damage.

➔ Firmly tighten the connection.

➔ Connect the Y-cable to the PC/laptop and the power adapter.

7.2 Switching On

Warning

Risk of incorrect measurements due to improper setup

Before taking measurements, the Pentacam® AXL has to be switched on, at least for one hour.

➔ The first step is to switch on the PC or laptop.

➔ Then turn on the Pentacam® AXL with the on/off switch (position ON). The LED on the switch lights up green, *fig. 7-1, page 16.*

7.3 Switching Off

➔ Close the Pentacam® AXL program and close the Patient Data Management.

➔ Shut down the Windows operating system.

➔ Turn the Pentacam® AXL off with the on/off switch (OFF position)

7.4 Software Installation on separate PCs

The Pentacam-Software is network compatible. This makes it possible to install the Pentacam® Software on several PCs, connected in a local network.

Make sure, that all PC in a network do have the same Pentacam® software version installed.

A Floating License Key is part of every Pentacam® shipment. Please ensure a proper installation based on the Manual for the Floating License Key.

This allows an interactive parallel evaluation of the Pentacam® exams based on the released optional software packages and modules.

The demo examinations included can be viewed on every computer having the Pentacam® software installed.

For more detailed information contact your authorized dealer or our service department.

Questions? Contact FDA/CDRH/OCE/DID at CDRH-FOISTATUS@fda.hhs.gov or 301-796-8118

Records Processed under FOIA request 2016-2167; Released by CDRH on 09/06/2016

8 Patient Data Management

8.1 Starting Patient Data Management

You can enter and use the patient data by the patient data management.

After you have switched on the PC, it first loads the operating system.

➔ Click the Pentacam® AXL icon.

The user interface for the Patient Data Management appears.

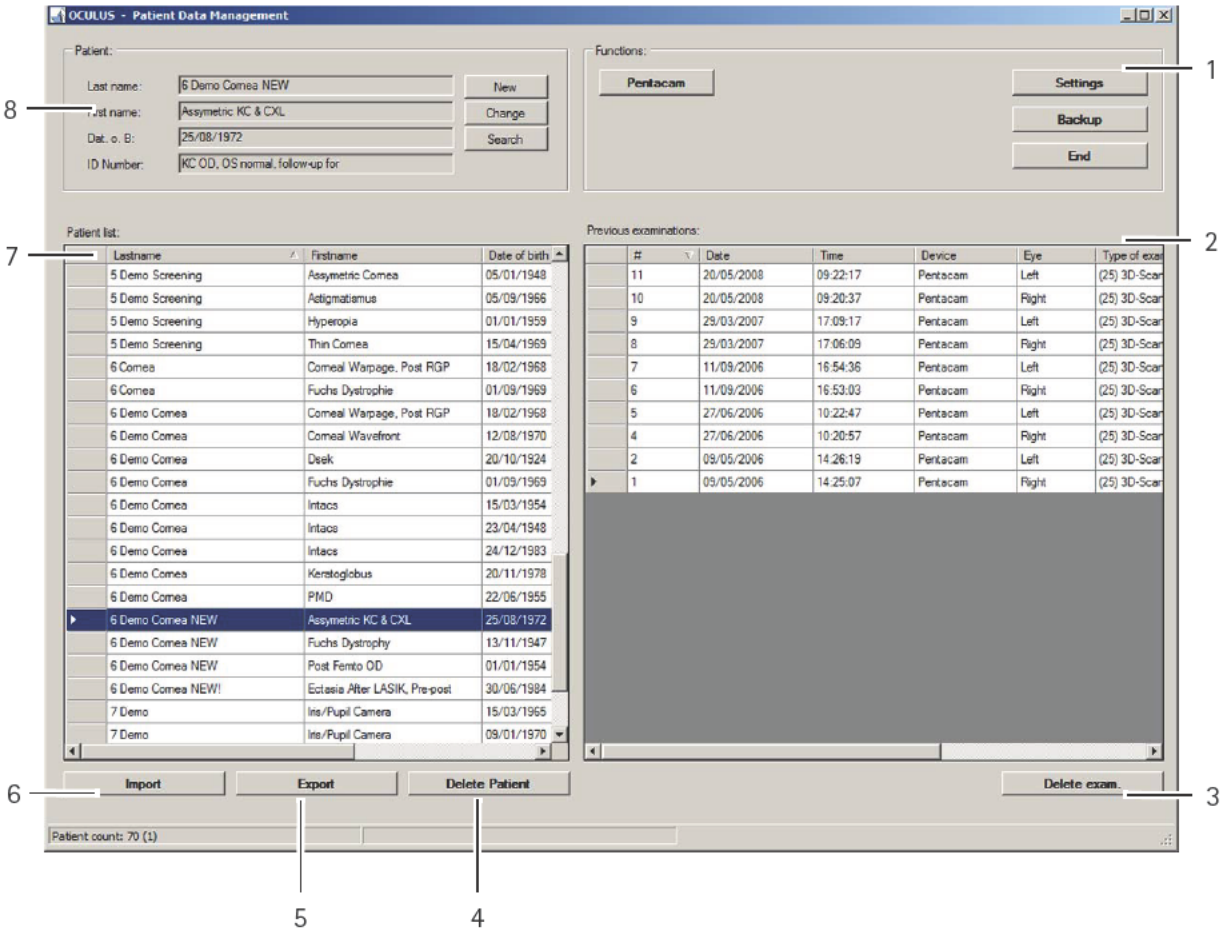

1 "Functions" group box
2 Previous examinations
3 [Delete exam.] button
4 [Delete Patient] button
5 [Export] button
6 [Import] button
7 Patient list
8 "Patient" group box

Fig. 8-1: Patient Data Management user interface

To get to the Pentacam® AXL program, you must first enter a new patient (8) or select an existing patient from the patient list (7).

For more information on Patient Data Management, refer to the *sect. 13, page 35*.

Questions? Contact FDA/CDRH/OCE/DID at CDRH-FOISTATUS@fda.hhs.gov or 301-796-8118

Records Processed under FOIA request 2016-2167; Released by CDRH on 09/06/2016

8.1.1 Entering a New Patient

➔ Press the [New] button to enter a new patient in the Patient Data Management system.

➔ Enter the patient's last name, first name and date of birth in the patient window.

Fig. 8-2: Entering patients

Optionally you can enter an ID number for the patient.

➔ To save the data you entered, click [Save].

The patient you have just entered now appears in the patient list.

8.1.2 Selecting an Existing Patient

The patient data list on the left-hand side of the screen displays all previously examined patients in alphabetical order.

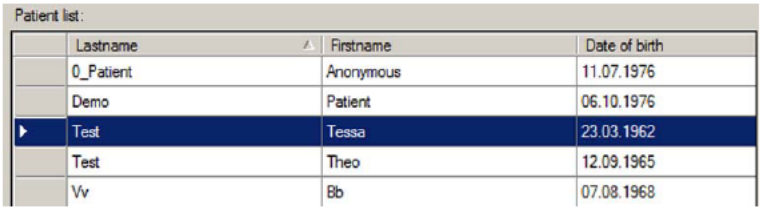

Fig. 8-3: Patient list

➔ Choose [Search] to quickly find the patient you are looking for in the list.

➔ Enter the patient's name or the first letter of the name in the "Last name" field.

Alternatively, you can search for the patient using an ID number, first name or date of birth, assuming that one was assigned when the patient was first recorded.

➔ In the list that appears, click the entry you were searching for to transfer the patient's name to the patient window. This also brings up a list of any previous examinations for that patient in the examination window (bottom right side).

Questions? Contact FDA/CDRH/OCE/DID at CDRH-FOISTATUS@fda.hhs.gov or 301-796-8118

Records Processed under FOIA request 2016-2167; Released by CDRH on 09/06/2016

Extended Patient Search: [Extended] Checkbox

➔ Click on the [Extended] checkbox.

The screen displays additional search parameters which reference previous examinations. Proceed as for the input of a patient name.

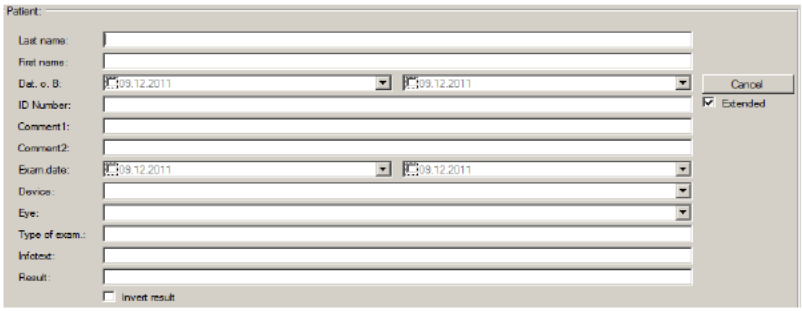

Fig. 8-4: Advanced search

8.2 Starting the Pentacam® AXL Software

Switching from Patient Data Management to the Pentacam® program:

➔ After selecting a patient: Press the [Pentacam] button to start the Pentacam® AXL program *(fig. 8-1, page 18)*

or

➔ Double-click the selected patient name or an examination to start the Pentacam® AXL program.

Questions? Contact FDA/CDRH/OCE/DID at CDRH-FOISTATUS@fda.hhs.gov or (301) 796-8118

Records Processed under FOIA request 2016-2167; Released by CDRH on 09/06/2016

9 Pentacam® AXL Program

Note

The Pentacam® AXL program is not to be used to dictate therapy without professional correlation with other clinical findings and diagnostic tests.

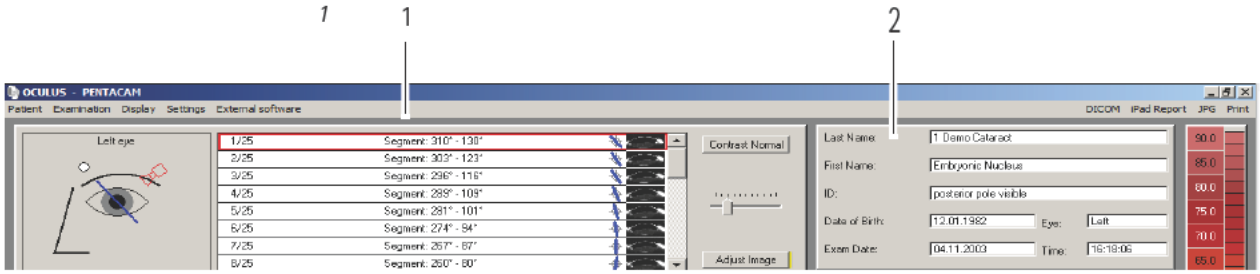

1 Menu bar
2 Examination and Patient data
Fig. 9-1: Pentacam® AXL program menu (upper section)

Loading previous examinations

- ➔ Select the menu item [Examination] and click [Load].
  The dialog box "Load Examination" appears.
- ➔ Make a selection by clicking the required examination.
- ➔ Confirm your selection by clicking [OK], or by double clicking.
  The Pentacam® program will load the examination you have selected.

Starting a measurement

- ➔ Select the [Examination] tab and click [Scan].
  The blue slit light is activated and the Scan menu *(sect. 10, page 23)* appears.

Note

As this instruction manual focuses on the Pentacam® operating concept, the description of Pentacam® program functions is limited to starting the measuring process and loading previous examinations. The Reference manual contains detailed information on the functions of the Pentacam® program.

Questions? Contact FDA/CDRH/OCE/DID at CDRH-FOISTATUS@fda.hhs.gov or 301-796-8118

Records Processed under FOIA request 2016-2167; Released by CDRH on 09/06/2016

Helpful information

The Pentacam® program provides you a direct help. You can recognise that by a yellow mark

.

Questions? Contact FDA/CDRH/OCE/DID at CDRH-FOISTATUS@fda.hhs.gov or (301-796-8118

Records Processed under FOIA request 2016-2167; Released by CDRH on 09/06/2016

10 Scan Menu

Switching from the Pentacam® program to the Scan menu:

➔ In the Pentacam® program *(fig. 9-1, page 21)* select the menu item [Examination] and click [Scan].

10.1 Screen layout

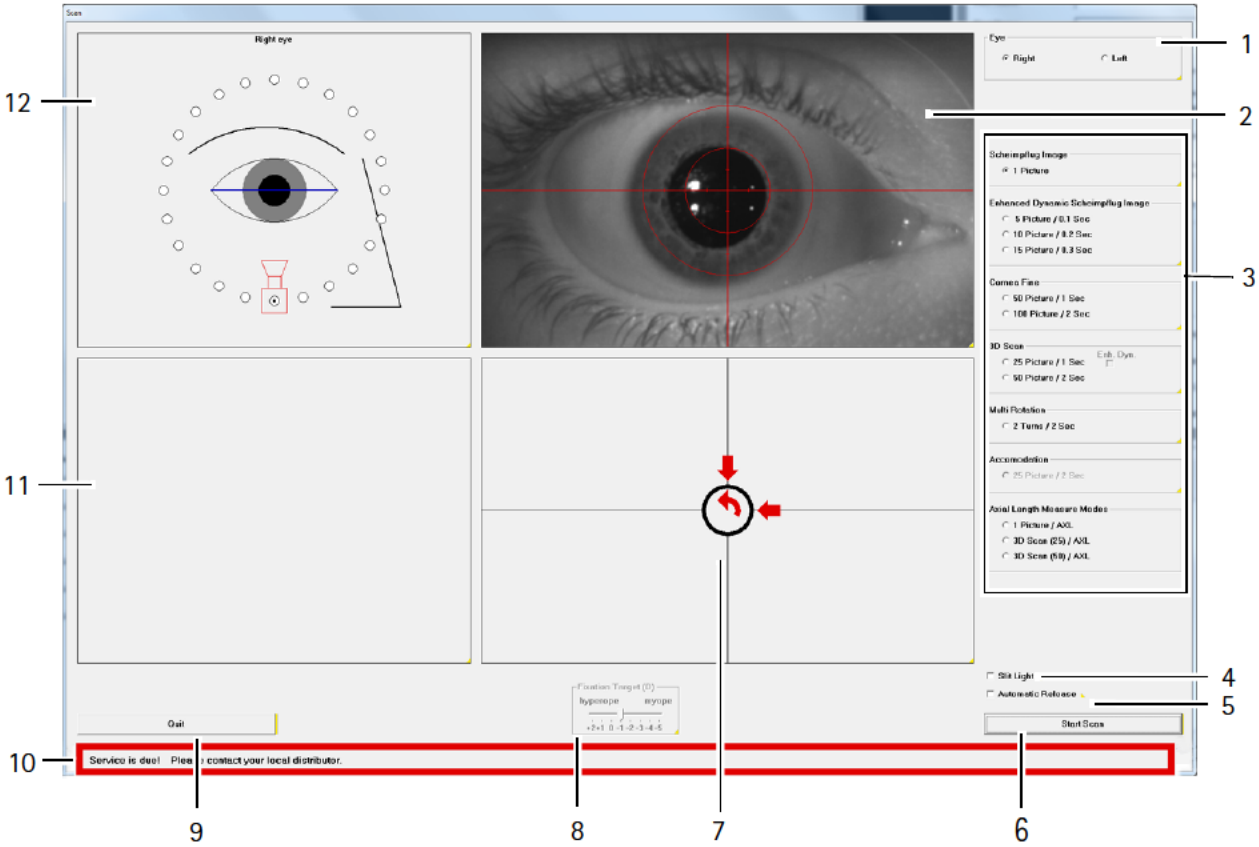

1 "Eye" field
2 Pupil image
3 "Image Options" area
4 [Slit Light] checkbox
5 [Automatic Release] checkbox
6 [Start Scan] button
7 Adjustment window
8 Fixation Target
9 [Quit] button
10 Message about device
11 Scheimpflug Image
12 "Orientation" field

Fig. 10-1: "Scan" screen

- The eye currently being examined is detected automatically and is displayed in the "Eye" field (1).
- The Pupil Image (2) shows the vertical / horizontal positioning of the Pentacam. The object is to position the yellow dot marking the apex of the cornea in the centre of the crosshairs. The blue dot marks the centre of the pupil, while the blue ring frames the pupil.

Questions? Contact FDA/CDRH/OCE/DHT at CDRH-FOISTATUS@fda.hhs.gov or 301-796-8118

Records Processed under FOIA request 2016-2167; Released by CDRH on 09/06/2016

- You can set the type of image required for the respective examination in the "Image Options" area (3) *(sect. 10.1.1, page 24 and sect. , page 25)*. „Axis Length Measure Modes": Click a button to enable a measurement of the axial length.
- Click the [Slit Light] checkbox (4) to activate/deactivate the blue light for illuminating the eye.
- Click the [Automatic Release] checkbox (5) to activate automatic measurement.
- Clicking the [Start Scan] button (6) activates manual measurement. You can also use the Return key.
- Inside the adjustment window (7), there are arrows showing you the direction in which you must move the Pentacam® to activate automatic measurement (Automatic Release).
- The "Fixation Target" setting (8) is a parameter to optimize the fixation.
- Click the [Quit] button (9) to abort the measurement.
- This line (10) shows messages about the device, for example if a service is due.
- The Scheimpflug image (11) shows the distance between Pentacam® and patient. The objective of this setting is to move the red dot on the front surface of the cornea so as to coincide with the red line.
- The "Orientation" field (12) shows the respective position of the camera and the eye, which is currently being examined.

10.1.1 Scheimpflug image settings

You can set the number and type of images required for the respective examination in the "Image Options" box (3).

"Scheimpflug Image" group box

- If you activate this option, the camera records only one Scheimpflug image. You can freely select the camera position you require by clicking the white rings in the "Orientation" field (12).

"Enhanced Dynamic Scheimpflug Image" group box

- Use this option to make the camera record either 5, 10 or 15 Scheimpflug images, with the camera remaining in the same position. Image averaging is carried out on the recorded images to minimise background noise. Only one Scheimpflug image is displayed. You can freely select the camera position you require by clicking the white rings in the "Orientation" field (12). This type of image is suitable for a purely densitometric assessment of the lens.

Questions? Contact FDA/CDRH/OCE/DID at CDRH-FOISTATUS@fda.hhs.gov or (301) 796-8118

Records Processed under FOIA request 2016-2167; Released by CDRH on 09/06/2016

"3D Scan" group box

- Use this option to select how many images you want the camera to record per scan. The difference is in the duration of the examination and the number of measuring points that are evaluated. A scan comprising 50 images takes longer of the patient provides the highest amount on measured elevation data.. This type of examination is used for evaluating the cornea and anterior chamber.

"Cornea Fine" group box

- Select this option for a more detailed image of the cornea.

  The camera does not capture the deeper-lying layers of the front part. You can select 50 Scheimpflug images for a recording time of one second, or 100 Scheimpflug images for a recording time of two seconds.

"Multi Rotation" group box

- If you select this option, the camera will record Scheimpflug images from 50 different positions while performing a full rotation twice around the eye.

"Accommodation" group box

- If you select this option, the camera will take a total of 50 Scheimpflug images. While the camera is recording the images, the "Fixation Target" shifts constantly from -5 D to +2 D. The camera records the Scheimpflug images from a pre-selected camera position.

"Axial Length Measure modes" group box

- If you select this option, the desired mode for the axial length measurement is enabled.

[Enh. Dyn.] checkbox in the "3D Scan" group box

- Activating the "Enh. Dyn." function prolongs the exposure time per Scheimpflug image. The advantage is an accurate representation of phakic IOLs. If you select this recording mode, colours and evaluations are neither calculated nor displayed.

Questions? Contact FDA/CDRH/OCE/DID at CDRH-FOISTATUS@fda.hhs.gov or 301-796-8118

Records Processed under FOIA request 2016-2167; Released by CDRH on 09/06/2016

"Fixation Target" slider

- Use of the "Fixation Target" enables a better fixation of the patient. For this, the active "Fixation Target" (8), i.e. the LED blinking red in the middle of the blue slit, can be shifted in steps of 0.5 D. The object is to offset defects in the patient's vision and ensure a simpler method of fixation.

10.2 Information for recording Scheimpflug images

Type of examination	Examination mode	Images	Automatic measurement	Notes
Topography	3D scan	25-50	Yes	
Pachymetry	3D scan	25-50	Yes	
Analysis of the anterior chamber	3D scan	25-50	Yes	Do not apply mydriatic drops.
Artificial lenses (general)	3D scan	15	Yes	If the pupil is insufficiently dilated, apply mydriatic drops Use 3D scan for measurements.
Measuring functions	3D scan	25-50	Yes	If the pupil is insufficiently dilated, apply mydriatic drops
Densitometry	3D scan Enhanced dynamic	25-50 5-15	No	Use the same number of images to enable a progress check.
IOLs, ICLs, PIOLs	3D scan for PIOLs, possibly longer exposure	25-50	Yes	If the pupil is insufficiently dilated, apply mydriatic drops

Questions? Contact FDA/CDRH/OCE/DID at CDRH-FOISTATUS@fda.hhs.gov or (301-796-8118

Records Processed under FOIA request 2016-2167; Released by CDRH on 09/06/2016

11 Measuring Procedure

Warning

Risk of incorrect measurement due to incorrect use

➔ Before first use: Let OCULUS or an authorized dealer train you in the operation of the Pentacam® AXL.

Risk of incorrect measurements due to improper setup

➔ Before taking measurements, the Pentacam® AXL has to be switched on, at least for one hour.

Default settings

➔ Start the Scan menu *(fig. 10-1, page 23)*.

➔ If necessary make changes to the image options for the particular part of the front of the eye that is to be examined.

The default settings in the "3D Scan" options are "25 images/ 1 second".

➔ Adjust the table height.

➔ Check that

- fresh paper has been put onto the chin rest or the chin rest has been cleaned and disinfected, *sect. 15, page 42*.
- the forehead rest has been cleaned and disinfected after each examination, *sect. 15, page 42*.
- the illuminated slit with, the lens in front of the camera and the acrylic glass are clean.

➔ Ask the patient to place his or her head on the chin and forehead rest.

➔ Do not touch the patient and the Pentacam® AXL simultaneously.

Questions? Contact FDA/CDRH/OCE/DID at CDRH-FOISTATUS@fda.hhs.gov or 301-796-8118

Records Processed under FOIA request 2016-2167; Released by CDRH on 09/06/2016

Rough adjustment

➔ The black ring marking between the chin rest and the forehead rest (1) should be used for gauging the required height of the patient's eyes.

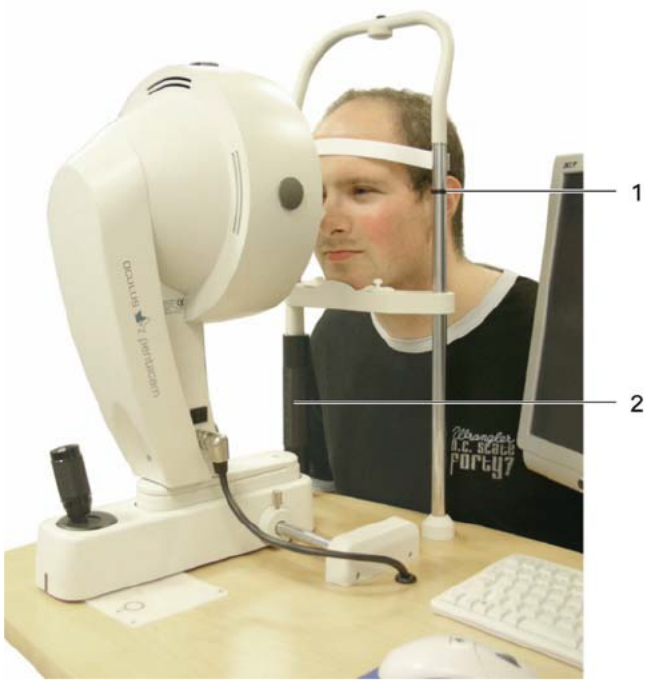

1 Marking (black ring) *2 Twist grip*

Fig. 11-1: Rough adjustment of the chin and forehead rest

➔ Adjust the patient's eye level using the twist grip (2).
The patient is positioned correctly when chin and forehead touch the rests and the eyes are level with the marking.

Questions? Contact FDA/CDRH/OCE/DID at CDRH-FOISTATUS@fda.hhs.gov or (301-796-8118

Records Processed under FOIA request 2016-2167; Released by CDRH on 09/06/2016

➔ Example of a rough adjustment for the right eye: Move the cross slide (1) until the marking at the end of the cross slide (4) roughly coincides with the circle R (3) on the sliding plate.

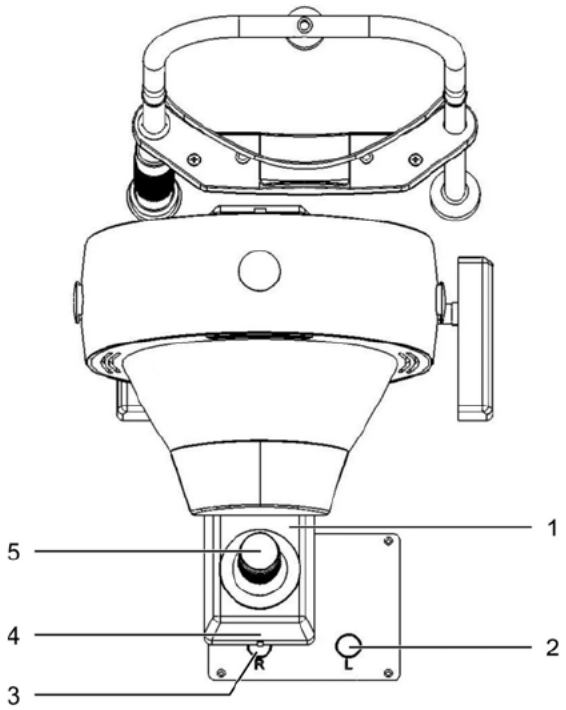

1 *Cross slide*
2 *Left marking*
3 *Right marking*
4 *Marking on the cross slide*
5 *Joystick*

Fig. 11-2: Markings on the cross slide

➔ Look at the patient's eye you are examining from one side and make sure that the blue slit light illuminates the cornea.

➔ If necessary, adjust the position of the cross slide to the left or right

Questions? Contact FDA/CDRH/OCE/DID at CDRH-FOISTATUS@fda.hhs.gov or 301-796-8118

Records Processed under FOIA request 2016-2167; Released by CDRH on 09/06/2016

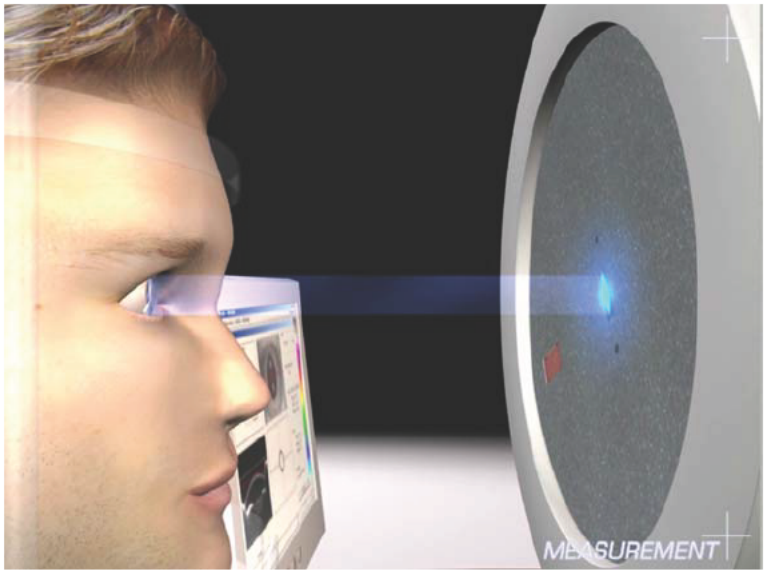

Fig. 11-3: Slit light on the cornea

Note

If the blue slit light is not visible, ensure that you have activated the [Slit Light] checkbox on the "Scan" screen.

Darkening the room/dark sheet

➔ If the lighting in the examination room has not been turned down or switched off, use the dark sheet supplied to cover the patient and the Pentacam.

Adjustment

➔ Move the cross slide towards the patient until the Scheimpflug image shows the cornea of the eye that you are examining.

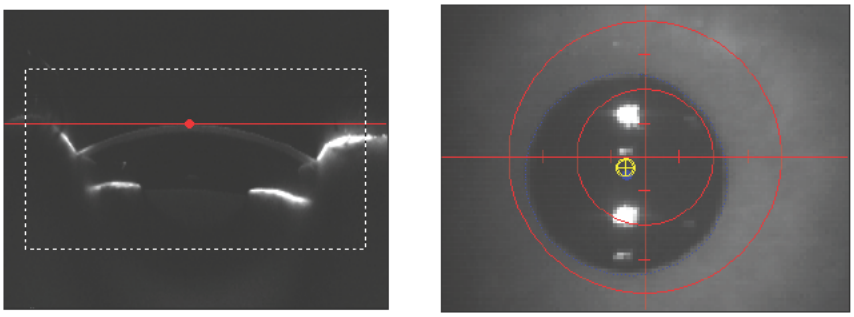

Fig. 11-4: Scheimpflug image (left) and pupil image (right)

The image is sharpest when the red dot coincides with the red line in the Scheimpflug image.

Questions? Contact FDA/CDRH/OCE/DID at CDRH-FOISTATUS@fda.hhs.gov or 301-796-8118

Records Processed under FOIA request 2016-2167; Released by CDRH on 09/06/2016

- Focus the pupil image by moving the joystick towards the Pentacam® or away from it.
- Adjust the left/right position of the Pentacam® and its height setting.

  Move the joystick to the left or right and rotate the joystick clockwise or anticlockwise.

  The tentative final position of the camera is reached when the yellow dot is in the centre of the crosshairs.
- Ask the patient to widen his or her eye and not to blink.

Fine adjustment

- Make any fine adjustments required based on the information in the adjustment window. To do so, move the joystick in the specified directions.

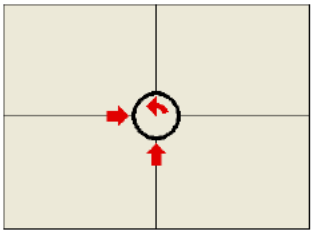

Example:

- Move the joystick to the right.
-
- Turn the joystick counter clockwise.
- Move the joystick forwards.

Arrow	Camera movement	Joystick movement[a]
→	right	Move the joystick to the right
←	left	Move the joystick to the left
↑	forward	Move the joystick toward the patient
↓	back	Move the joystick away from the patient
↱	up	Rotate the joystick clockwise
↰	down	Rotate the joystick counter-clockwise

a. If you turn the joystick to its limit, the measuring head and the chin rest move in opposite directions.

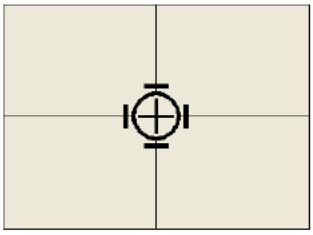

When you have achieved the expected position, a black cross will appear in the centre of the ring, surrounded by four black lines. The Pentacam® will automatically begin measuring, alternately you can start the measuring procedure manually.

- For measuring manually: Start measuring by clicking [Start Scan] or by pressing the return key.

Questions? Contact FDA/CDRH/OCE/DID at CDRH-FOISTATUS@fda.hhs.gov or 301-796-8118

Records Processed under FOIA request 2016-2167; Released by CDRH on 09/06/2016

Warning

It may not be possible to carry out a measurement with manual release.

- ➔ Ask the patient to remove his or her head from the rest.
- ➔ Check the measurement results by referring to the quality specifications *(sect. 12, page 32)*.

12 Quality Specifications

After you have begun measuring either automatically or manually, the Pentacam® program opens. The "QS" value appears in field (1).

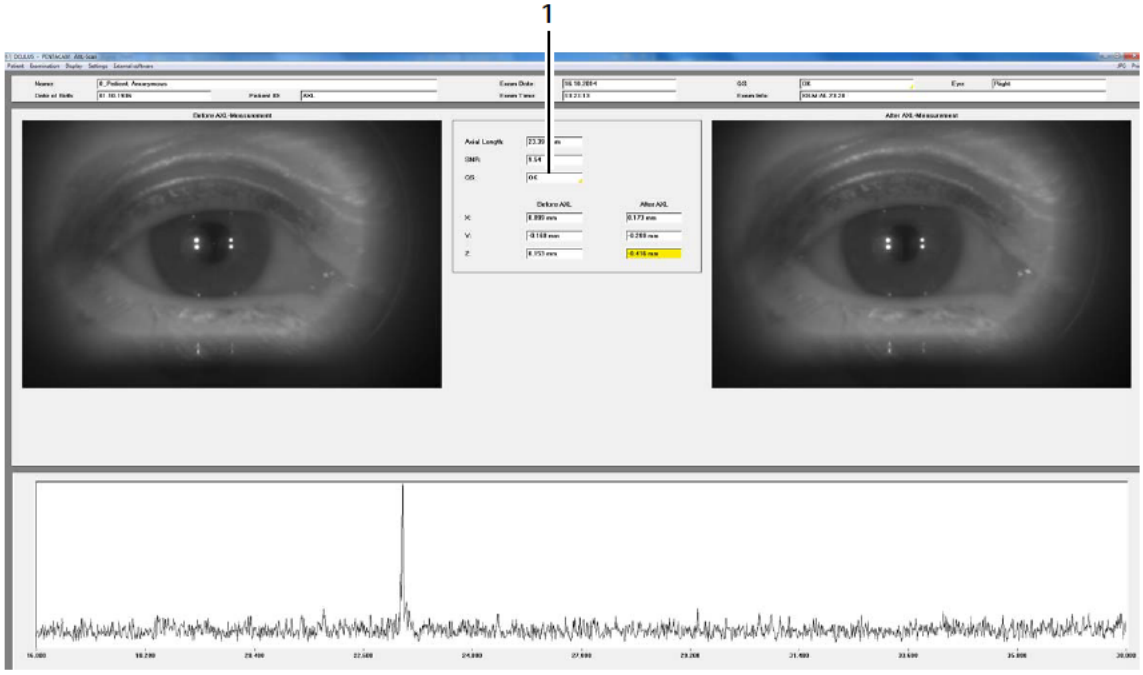

1 "QS" display

Fig. 12-1: Pentacam® program with "QS"display

Note

All examinations are automatically saved, regardless of the quality of the measurement taken.

If the "QS" display

- reads OK, the measurement is correct and can be reproduced.
- is red, you must repeat the measurement.

Questions? Contact FDA/CDRH/OCE/DID at CDRH-FOISTATUS@fda.hhs.gov or (301-796-8118

Records Processed under FOIA request 2016-2167; Released by CDRH on 09/06/2016

➔ is highlighted in yellow, click on the "QS" button.
The following dialog box appears:

Fig. 12-2: Examination Quality Specification

➔ Check the measurement results.

➔ If you have any doubts, repeat the measurement.

Notes on individual parameters

- **Analysed Area**
  If this value is less than the permissible threshold, the patient must widen his or her eye.
- **Valid Data**
  If this value is less than the permissible threshold, you must darken the room.
- **Lost Segments and Lost Seg. Continuous**
  If one of these values exceeds the permissible threshold, you must ask the patient not to blink while you are measuring.
- **Alignment (XY) and Alignment (Z)**
  If one of these values exceeds the permissible threshold, you may have moved the cross slide at the moment you began measuring.
- **Eye Movement**
  If this value exceeds the permissible threshold, it is possible that fixation of the patient is inadequate.
- **SNR**
  Signal to noise ratio

Questions? Contact FDA/CDRH/OCE/DID at CDRH-FOISTATUS@fda.hhs.gov or 301-796-8118

Records Processed under FOIA request 2016-2167; Released by CDRH on 09/06/2016

Terminating "QS"

- Click [Cancel] to return to the Pentacam® program.
- If required, delete the measurement if the image is inadequate.
- Terminate the current examination which has been saved.
- If required, make preparations to examine another patient. In the "Pentacam" overview, select the "Examination" menu and click [New Patient/End].

Questions? Contact FDA/CDRH/OCE/DID at CDRH-FOISTATUS@fda.hhs.gov or (301) 796-8118

Records Processed under FOIA request 2016-2167; Released by CDRH on 09/06/2016

13 Managing Patient Data

Once you have completed an examination, you can do the following with the patient data:

- Rename it, *sect. 13.1, page 35*
- Export it, *sect. 13.2, page 35*
- Import it, *sect. 13.3, page 37*
- Back up, *sect. 13.4, page 38*

For more information on Patient Data Management, refer to the *User Guide*.

13.1 Rename Patient Data

After creating of the patient data, you can edit it.

➔ Press the [Change] button.

The input boxes for patient data are now enabled, and the cursor jumps to the "Last name" field.

➔ Change the entries in the individual boxes.

➔ Press the [Save] button.

13.2 Exporting Patient Data

Patient and examination data can be exported, for example, for forwarding to another clinic.

➔ Select the patient and also one of the examinations in the respective list as required.

➔ Click [Export] button below the patient list. The following dialog appears:

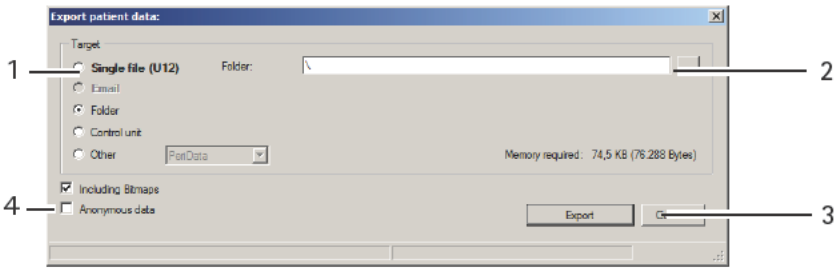

1 *Saving destination selection*
2 *[...] button*
3 *[Cancel] and [Export] buttons*
4 *Options for data export*

Fig. 13-1: "Export patient data" dialog

Questions? Contact FDA/CDRH/OCE/DID at CDRH-FOISTATUS@fda.hhs.gov or 301-796-8118

Records Processed under FOIA request 2016-2167; Released by CDRH on 09/06/2016

The default options for import and export of data are configured in the "Settings" field, see also the *User Guide*.

Depending on the settings, you may not have to perform all of the following steps (e.g. selection of the directory).

➔ Select the "Target" (1) where you would like to export the data.

Recommendation: Export the patient data using the "Single file (U12)" option.

➔ Press the [...] button. (2).

➔ In the dialog that appears, select the folder or the file to which the patient data should be exported.

➔ Specify the name and destination of the file you are saving.

➔ Make sure you have selected [Including Bitmaps].

➔ Click [Export].

The patient and examination data have now been saved at the destination specified.

You can send data stored on the hard drive as an e-mail attachment.

Note

Requirements for transferring data to another PC:

- The Pentacam® program must be installed on the other PC. If the program is updated on the Pentacam® PC (sender), the program on the other PC (recipient) must also be updated.
- Make sure, that the PC is connected to a local network controlled by the Floating License Key or that a single license key is connected to the PC in order to interactively evaluate the exams.

Questions? Contact FDA/CDRH/OCE/DID at CDRH-FOISTATUS@fda.hhs.gov or 301-796-8118

Records Processed under FOIA request 2016-2167; Released by CDRH on 09/06/2016.

13.3 Importing Patient Data

If you receive patient data, for example, on a USB stick, you can import these data.

Note

Risk of loss of data due to computer viruses

Computer viruses can cause loss of data.

➔ Run a virus check before importing data from the USB flash drive.

➔ Press the [Import] button. The following dialog appears:

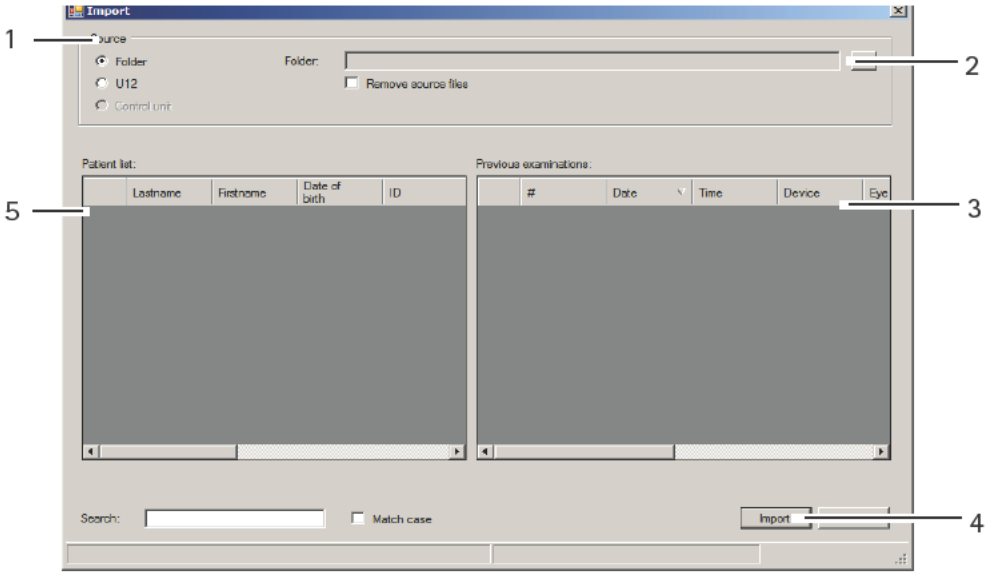

1 *Select data source*
2 *[...] button*
3 *Previous examinations*
4 *[Import] button*
5 *Patient list*

Fig. 13-2: "Import" dialog

The default options for import and export of data are configured in the "Settings" field, see also the *User Guide*.

➔ Depending on the settings, you may not have to perform all of the following steps (e.g. selection of the directory).

➔ Select the option (1) where the source data are contained ("Folder" or "U12" (single file)).

Recommendation: Import the patient data using the "Single file (U12)" option.

➔ Press the [...] button. (2).

Questions? Contact FDA/CDRH/OCE/DID at CDRH-FOISTATUS@fda.hhs.gov or 301-796-8118

Records Processed under FOIA request 2016-2167; Released by CDRH on 09/06/2016

➔ In the dialog box, select the directory or the file where the patient data are located.

➔ Confirm your selection with [OK] or [Open].

The patients and the associated examinations that are found are displayed in the lower part of the dialog.

➔ To import the data, press the [Import] button (4).

The data will then be available in the Patient Data Management system.

13.4 Data Backup

You should make a backup copy of patient and examination data at regular intervals. In case of loss of data, you can reconstruct the data from a previously created backup with the help of this function. Since data backup takes several minutes, depending on the scope of the database and the data to be backed up, a backup should be carried out when the PC and the device will not be needed.

Note

Risk of loss of data due to computer viruses

Computer viruses can cause loss of data.

➔ Run a virus check before making a backup to a USB flash drive.

The general rules for security backups apply to the creation of backup copies created with the help of the Patient Data Management system. Storage of backup files should always be done on a separate system (e.g. on a USB flash drive with adequate capacity).

Questions? Contact FDA/CDRH/OCE/DID at CDRH-FOISTATUS@fda.hhs.gov or 301-796-8118

Records Processed under FOIA request 2016-2167; Released by CDRH on 09/06/2016

13.4.1 Backup Data

➔ Press the [Backup] button at the top right of the Patient Data Management system. The following dialog is displayed:

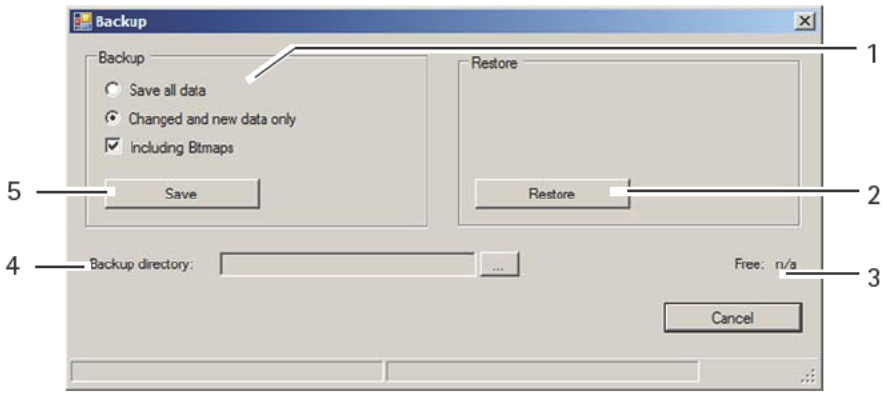

1 *Backup data selection*
2 *[Restore] button*
3 *Display free storage space*
4 *Backup directory and button [...]*
5 *[Save] button*

Fig. 13-3: "Backup" dialog

➔ Select whether all of the data or only changed data should be backed up.

The Patient Data Management system internally tags all saved data records.

If you select the option "Changed and new data only", only the data records that were not saved during a previous backup will be backed up.

➔ Press the [...] button to the right of the "Backup directory" box (4).

➔ In the dialog that appears, select the folder to which the data should be backed up.

➔ Confirm your selection with [OK].

➔ To back up the data, press the [Save] button (5). The previously selected data will then be backed up to the corresponding folder.

13.4.2 Reconstructing Data

If a loss of data occurs, the data from a previous backup can be re-imported into the Patient Data Management system.

➔ Press the [...] button.

➔ In the dialog that appears, select the folder which contains the backup data.

➔ Confirm your selection with [OK].

➔ To import the data, press the [Restore] button (2). All data in the appropriate directory are copied to the Patient Data Management system.

Questions? Contact FDA/CDRH/OCE/DID at CDRH-FOISTATUS@fda.hhs.gov or 301-796-8118

Records Processed under FOIA request 2016-2167; Released by CDRH on 09/06/2016

13.4.3 Automatic Backup

In addition to the manually performed backup, it is also possible to automatically run a backup when exiting the Patient Data Management system. The settings required for this can be made in the "Settings" area, see *User Guide*.

Questions? Contact FDA/CDRH/OCE/DID at CDRH-FOISTATUS@fda.hhs.gov or (301) 796-8118

Records Processed under FOIA request 2016-2167; Released by CDRH on 09/06/2016

14 Test measurements with the Pentacam® AXL

The Pentacam® AXL is tested and calibrated in the Oculus factory. OCULUS Optikgeraete GmbH recommends to perform regular test measurements of the Pentacam® AXL.

A human eye should be measured initially. Minimum 5 consecutive measurements per eye should be done and the arithmetic mean has to be calculated and recorded.

Once in a month this measurement should be repeated using this eye as described above.

The arithmetic mean of the initial and the current measurement should be compared.

The tolerance range of the original and the current results are described in the table chart below.

	Tolerance Range
Curvature	+/- 0.25 mm
Pachymetry	+/- 10 µm

If the difference between the initial and the current measurement is outside the tolerance range, please inform us or contact your authorized Oculus distributor to get further support.

Questions? Contact FDA/CDRH/OCE/DID at CDRH-FOISTATUS@fda.hhs.gov or 301-796-8118

Records Processed under FOIA request 2016-2167; Released by CDRH on 09/06/2016

15 Cleaning, Disinfection and Maintenance

Cleaning and disinfection of the Pentacam® AXL is described in this chapter.

Sterilization is not required.

➔ Heed the product descriptions and instruction manuals of products and equipment you use to care for, clean, and disinfect the unit and/ or its accessories.

➔ Do not clean the Pentacam® AXL with aggressive, chlorine containing, abrasive or sharp cleaning agents.

15.1 Cleaning

Warning

Risk of electric shock if the Pentacam® AXL is not completely disconnected from the mains for the cleaning.

➔ Turn the Pentacam® AXL off, *sect. 7.3, page 17*.

➔ Pull the power plug before cleaning. When disconnecting electrical connections, pull on the respective plug and not on the cable itself.

Required materials:

- Antistatic cleaning agent
- Cleaner for painted surfaces: Mixture of equal parts of alcohol and distilled water, possibly with a few drops of household detergent
- Soft, lint-free cloth
- Purified compressed air
- commercial clean agent for the acrylic glass

Cleaning intervalls

➔ Clean the components of the Pentacam® AXL once a month or if necessary.

Cleaning the Housing

➔ It is best to clean the housing surfaces with a soft cloth and an anti-static cleaning agent.

➔ Wipe off any residue from painted surfaces with the mixture for painted surfaces.

Cleaning the Chin-Forehead Rest

➔ Make sure that no liquid gets into any of the openings of the Pentacam® AXL.

Do not use liquid from aerosol cans.

Questions? Contact FDA/CDRH/OCE/DID at CDRH-FOISTATUS@fda.hhs.gov or (301) 796-8118

Records Processed under FOIA request 2016-2167; Released by CDRH on 09/06/2016

- ➔ Clean the chin-forehead rest with a soap solution (or with alcohol, if very dirty).
- ➔ Use a lint-free, damp cloth.

Cleaning the illuminated slit

The optical components illuminating the slit, and the lens in front of the camera are precision parts and sensitive to pressure. The surfaces of these components are susceptible to scratching.

Note

When cleaning the illuminated slit, do not use a cloth or other cleaning agents.

- ➔ Carefully clean the centre of the illuminated slit with purified compressed air.
- ➔ Clean the lens in front of the camera using a dry, lint-free cloth.
- ➔ Clean the acrylic glass with a commercial clean agent.

15.2 Disinfection

- ➔ Recommendation: Use disinfection wipes suitable for medical devices, for example:
- Mikrozid sensitive wipes premium
  Fa. Schülke & Mayr
  Softpack 48 Stück
  Art. Nr. 165711
  Schülke & Mayr GmbH
  Tel: +4940521000
  Fax: +494052100318
  E-Mail@schuelke.com
  www.schuelke.com

Note

Equipment damage caused by disinfectant solution

The disinfectant solution may damage the surface of the device if it is sprayed directly on it.

- ➔ Spray the disinfectant solution onto a cleaning cloth, do not spray it directly on the device.

- ➔ Disinfect the forehead rest after each examination.
- ➔ If you do not use paper for the chinrest, disinfect the chinrest after each examination.

Questions? Contact FDA/CDRH/OCE/DID at CDRH-FOISTATUS@fda.hhs.gov or 301-796-8118

Records Processed under FOIA request 2016-2167; Released by CDRH on 09/06/2016

15.3 Maintenance

To ensure that it functions correctly and safely we recommend the following: Have the Pentacam® AXL checked after 25000 examinations or every two years by our service department or an authorized dealer. The Pentacam® AXL will inform you.

By daily pop up window:

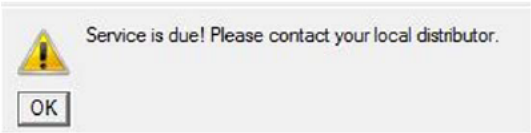

Fig. 15-1: Daily pop up window

In the settings, *see User Guide*:

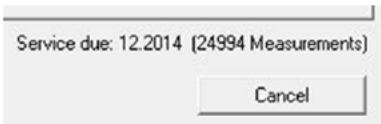

Fig. 15-2: Date of next service and number of performed examinations

In the scan menu, *sect. 10, page 23*:

Fig. 15-3: Preliminary information (3 month before)

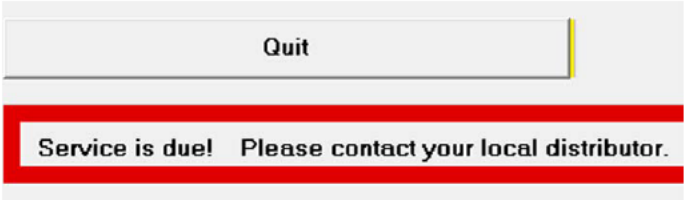

Fig. 15-4: Information when service is due

In examinations (it will be stored):

Fig. 15-5: Sign to perform maintenance

Let the Pentacam® AXL checked by our service department or an authorized dealer.

Questions? Contact FDA/CDRH/OCE/DID at CDRH-FOISTATUS@fda.hhs.gov or (301-796-8118

Records Processed under FOIA request 2016-2167; Released by CDRH on 09/06/2016

Warning

Risk of personal injury or material damage due to invisible laser radiation

The Pentacam® AXL contains a Class 1 laser according to IEC 60825-1: 2007. It is an encapsulated laser system. When the Pentacam® AXL cover is opened, you may be exposed to invisible, Class 3R (5 mW) laser radiation.

- ➔ Never open the unit.
- ➔ For authorized service personnel only: When doing maintenance jobs, avoid looking directly into the laser beam.

15.4 Attaching Paper to the Chin Rest

If you want to attach new chin rest paper, follow these instructions:

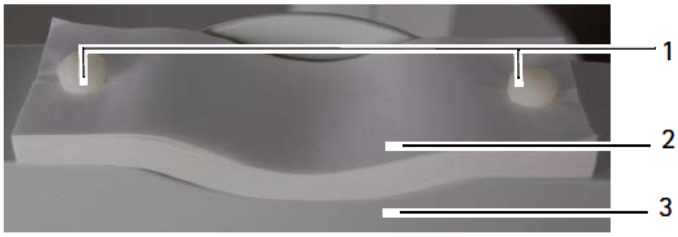

1 Pins
2 Paper for chin support
3 Chin rest

Fig. 15-6: Fasten chin rest paper

- ➔ Pull the two pins (1) out of the chin rest.
- ➔ Place the chin rest paper (2) in such a way that the holes of the paper and those in the chin rest (3) are aligned.
- ➔ Insert the two pins (1) in the chin rest.

Questions? Contact FDA/CDRH/OCE/DID at CDRH-FOISTATUS@fda.hhs.gov or 301-796-8118

Records Processed under FOIA request 2016-2167; Released by CDRH on 09/06/2016

16 Troubleshooting

Warning

If an error occurs which you are unable to correct by following the instructions below, label the device as "out of order" and contact our service department or an authorised dealer.

Error	Possible cause	Remedy
After you have started the Pentacam® program *(sect. 9, page 21)*, the following dialog box appears: "No communication with Pentacam!"..	No power to the power adapter	Check whether the indicator light on the power supply is on. If not, connect the power supply to the mains.
	Connection cable of the Pentacam® AXL is not plugged properly.	Check wether ➔ the power supply cable is correctly attached to the Pentacam® AXL. ➔ the blue slit light is visible in the Scan menu *(sect. 10, page 23)*. ■ the USB connector is properly inserted
	Software/hardware problems	Switch the Pentacam® off and restart the PC. Switch the Pentacam® AXL on as soon as Patient Data Management becomes active. When you start the Pentacam® program, the message, "Load Bootloader" must appear. Contact the service department or your authorised dealer.

Questions? Contact FDA/CDRH/OCE/DID at CDRH-FOISTATUS@fda.hhs.gov or (301-796-8118

Records Processed under FOIA request 2016-2167; Released by CDRH on 09/06/2016

17 Transport and Storage

The Pentacam® AXL, must be properly dismantled and packed before being transported or stored.

17.1 Information on Transport and Storage

Storage

This device cannot withstand the temperature conditions for storage specified in ISO 15004-1.

➔ Do not store the Pentacam® AXL in conditions in which temperatures above 50°C and below -10° C could occur.

In accordance with DIN EN 60601-1, the storage conditions are:

Ambient temperature range	-10°C to +55°C
Relative humidity, including condensation	10% to 95%
Air pressure range	700 hPa to1060 hPa

Transport

In accordance with DIN EN 60601-1, the transport conditions are:

Ambient temperature range	-40°C to +70°C
Relative humidity range from	10% to 95%, including condensation
Air pressure range	500 hPa to 1060 hPa

17.2 Disassembly

➔ End the current session.

➔ Switch off the device.

➔ Disconnect the cable from the computer/laptop and the power adapter.

Questions? Contact FDA/CDRH/OCE/DID at CDRH-FOISTATUS@fda.hhs.gov or 301-796-8118

Records Processed under FOIA request 2016-2167; Released by CDRH on 09/06/2016

Abb. 17-1: Disassembly

➔ Loosen the screw connection of the Y cable and pull it out.
When disconnecting electrical connections, pull on the respective plug and not on the cable itself.

17.3 Transport and Storage

Warning

Risk of equipment damage due to incorrect shipment or from improper storage

➔ Avoid shocks, vibrations, and contamination.
➔ Avoid high temperatures and humidity.

➔ Transport the Pentacam® AXL carefully.
➔ Do not hold the device by the joystick to carry it.
➔ Store the Pentacam® AXL in compliance with the storage conditions.
➔ Avoid placing near heaters and moisture.

Questions? Contact FDA/CDRH/OCE/DID at CDRH-FOISTATUS@fda.hhs.gov or (301) 796-8118

Records Processed under FOIA request 2016-2167; Released by CDRH on 09/06/2016

18 Disposal

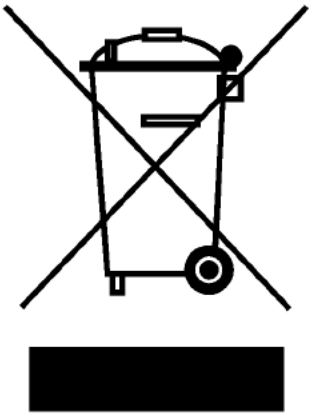

In accordance with Directive 2002/96/EC of the European Parliament and the Council of 27 January 2003, and in accordance with German law governing the marketing, return and environmentally compatible disposal of used electrical and electronic devices, such appliances must be recycled and may not be discarded as household waste.

➔ Dispose the Pentacam® AXL in a compliant manner.

19 Terms of Warranty and Servicing

19.1 Terms of Warranty

Please note the following warranty provisions:

- Prior to and while operating the device it is important that you heed the instruction manual and safety instructions.
- In accordance with legal regulations, you are entitled to a warranty for the Pentacam® AXL.
- If modifications are made to the Pentacam® AXL by unauthorized persons, all warranty claims shall be voided. Improper modifications and repairs may result in considerable hazards to users and patients.
- Any entitlement to a warranty shall also be void if unauthorized persons interfere with the supplied computer hardware and software.
- Any transport damage must be reported immediately to the shipping company. Have the transport damage noted on the bill of lading so that complaint handling and compensation of damages can proceed in an orderly manner.
- In general, our Business and Shipping Terms on the date of purchase apply.

Questions? Contact FDA/CDRH/OCE/DID at CDRH-FOISTATUS@fda.hhs.gov or 301-796-8118

Records Processed under FOIA request 2016-2167; Released by CDRH on 09/06/2016

19.2 Assumption of Liability for Functions and Damage

OCULUS will only accept responsibility for the safety, reliability and serviceability of the Pentacam® AXL if the unit is used in compliance with the following terms:

- Only use the equipment in conformance with this instruction manual.
- There are no parts either on or inside the Pentacam® AXL that require maintenance or repair by the user. If assembly work, modifications, adjustments, repairs, changes or service are performed by unauthorized personnel, or if the Pentacam® AXL is improperly maintained or handled, then any liability by OCULUS is voided.
- If the above-referenced work is performed by authorized persons, request a certification of the scope and type of repair, and, if necessary, the changes to the standard values or to the operating range from the service technician. This certification must contain the date of performance and statement of the performing firm, with signature.
- If requested, OCULUS will provide the service technician with a list of spare parts and additional descriptive material for this purpose.
- Make certain that only original OCULUS parts are used.

19.3 Manufacturer and Service Address

Supplemental information is available from our Service Department or from our authorized representatives.

Manufacturer and Service address:

OCULUS Optikgeräte GmbH
Münchholzhäuser Straße 29
D 35582 Wetzlar
Tel.: +49 641 2005-0
Fax: +49 641 2005-255
E-mail: sales@oculus.de
www.oculus.de

USA:

OCULUS, Inc.
17721 59th Avenue NE
Arlington
WA 98223-1337
Tel. +1 425-670-9977
Fax +1 425-670-0742
E-mail: sales@oculususa.com

http://www.oculususa.com

Questions? Contact FDA/CDRH/OCE/DID at CDRH-FOISTATUS@fda.hhs.gov or (301) 796-8118

Records Processed under FOIA request 2016-2167; Released by CDRH on 09/06/2016

20 Declaration of Conformity

OCULUS®

OCULUS Optikgeräte GmbH
Münchholzhäuser Str. 29
D-35582 Wetzlar
Germany

Tel: +49 (0)641 / 20 05 - 0
Fax: +49 (0)641 / 20 05 - 255

Konformitätserklärung
Declaration of Conformity

Wir, OCULUS Optikgeräte GmbH, erklären in alleiniger Verantwortung, dass das unten beschriebene Medizinprodukt allen Anforderungen der nachstehenden Richtlinie und den damit verbundenen harmonisierten Normen entsprechen: 93/42/EWG

We, OCULUS Optikgeräte GmbH, declare on our own responsibility that the medical device described below is in compliance with requirements of the following directive and their related harmonized standards: 93/42/EEC

Produktbezeichnung/ Product name	Vorderabschnitts-Tomograph/ Anterior segment tomographer
Artikelnummer und Typ/ Article number and type	70100 Pentacam AXL
Gültig ab Seriennummer/ Valid from serial number	70100 1001 4101
Konformitätsbewertungsverfahren/ Conformity assessment procedure	Richtlinie 93/42/EWG: Anhang II ohne Abschnitt 4 Conformity according: 93/42/EEC, Annex II excluding section 4
Benannte Stelle/ Notified body	TÜV SÜD Product Service GmbH (0123) Ridlerstraße 65 80339 München / Germany
Ort, Datum/ Place, date	**Name und Funktion/** Name and function
Wetzlar, 08.05.2015	Qualitätsmanagement / Quality Manager OCULUS Optikgeräte GmbH Eckhard Loh

Questions? Contact FDA/CDRH/OCE/DID at CDRH-FOISTATUS@fda.hhs.gov or 301-796-8118

Records Processed under FOIA request 2016-2167; Released by CDRH on 09/06/2016

21 Technical Data

Measuring equipment

Camera	Digital CCD camera
Light source	Blue LEDs (475 nm, UV-free)
Speed	50 images in 2 seconds, 2760 measuring points per recorded image
Number of evaluated measuring points	max. 138,000
Dimensions W x D x H (measuring head)	280 x 205 x 450 mm (11.0 x 8.1 x 17.7 in)
Weight Pentacam® AXL (measuring head)	7,8 kg (17.2 lbs)

Measuring range

Curvature:	3 to 38 mm 9 to 99 D
Accuracy	± 0.1 D
Reproducibility	± 0.1 D
Working distance	80 mm
Axial length	14 to 40 mm

Power adapter

Power adapter HEMG 49 (05150150)	
Mains connection	90 - 264 V AC
Frequency	47 - 63 Hz
Power input, max.	85 VA
Output voltage	24 V DC
Fuses	Integrated overcurrent shut-off

Questions? Contact FDA/CDRH/OCE/DID at CDRH-FOISTATUS@fda.hhs.gov or (301-796-8118

Records Processed under FOIA request 2016-2167; Released by CDRH on 09/06/2016

Power supply Pentacam® AXL

Output voltage	24 V DC
Max. power consumption	37,4 W

Other information

Contraindications	None noted
Lifecycle expectancy	Up to 10 years

Classification according to IEC 60601 – 1

Type of protection against electrical shock	Protection class II
Level of protection against electrical shock	Type B
Level of protection against damaging water entry	IP20

Ambient operating requirements

Temperature	+10 °C to +40 °C
Humidity	30% to 75%
Air pressure	700hPa to 1060hPa

Storage conditions according to DIN EN 60601-1

Ambient temperature range	-10°C to +55°C
Relative humidity, including condensation	10% to 95%
Air pressure range	700 hPa bis 1060 hPa

Transport conditions according to DIN EN 60601-1

Ambient temperature range	-40°C to +70°C
Relative humidity, including condensation	10% to 95%
Air pressure range	500 hPa to 1060 hPa

Questions? Contact FDA/CDRH/OCE/DID at CDRH-FOISTATUS@fda.hhs.gov or 301-796-8118

Records Processed under FOIA request 2016-2167; Released by CDRH on 09/06/2016

Computer

Use a computer which is in conformity with the DIN EN 60950 standard.

Recommended computer specifications	2.7 GHz, 8 GB RAM, 1 TB HDD, Windows® 7, Intel Iris Pro

CE in accordance with EC Directive 93/42/EEC for Medical Devices

The unit is a Class IIa product.

Classifikation according to IEC 60825-1: 2007

The unit contains a Class 1 laser.	
Maximum output of the laser radiation	0.84 mW
Pulse duration	400 ms
Wavelength	880 nm

Questions? Contact FDA/CDRH/OCE/DID at CDRH-FOISTATUS@fda.hhs.gov or (301) 796-8118

Records Processed under FOIA request 2016-2167; Released by CDRH on 09/06/2016

22 Annex

22.1 Electromagnetic Compatibility

Medical electrical equipment is subject to special precautionary requirements with respect to EMC, and must be installed and operated according to the EMC-Instructions contained in the accompanying paperwork.

No special measures need be observed in respect of OCULUS devices and systems.

Portable and mobile RF-communications devices can interfere with electrically operated medical devices.

Manufactured under consideration of permitted degradations during or as a consequence of the EMC test without affecting the basic safety:

- A short interruption of the USB connection during the examination is permissible because it will not affect the diagnosis, treatment and observation.

Warning

The use of accessories, transducers and cables not specified by OCULUS (for example as replacement parts) may result in increased emissions or decreased immunity of the Pentacam® AXL.

➔ Use only the original accessories, transducers and cables specified by OCULUS.

The use of accessories, transducers and cables specified by OCULUS with devices other then the Pentacam® AXL may result in increased emissions or decreased immunity of the other device.

➔ Do not use the accessories, transducers and cables specified by OCULUS with devices other then the Pentacam® AXL.

Questions? Contact FDA/CDRH/OCE/DID at CDRH-FOISTATUS@fda.hhs.gov or 301-796-8118

Records Processed under FOIA request 2016-2167; Released by CDRH on 09/06/2016

To be in compliance with the requirements of the IEC 60601-1-2. 6.1 and 6.2 the following types of equipment, accessories, power adapters and cables must be used.

Order number	Description	
70100	Pentacam® AXL	
05200320	Cable with connector plug, EU standard	2.5 m (98.4 in)
05200210 (110 Volt)	Cable with connector plug, US standard	2.5 m (98.4 in)
05150150	Power adapter HMEG 49	24 V, 2,1A
0277000 00 052 0277000 00 054 0277000 00 056	Y cable	2 m 4 m 6 m

22.2 Guidance and Manufacturer's Declaration - Electromagnetic Emmisssions for the Pentacam® AXL

Guidance and manufacturer´s declaration electromagentic emmissions IEC 60601-1-2, 5.2.2.1, table 1		
The OCULUS Pentacam® AXL is intended for operation in the electromagnetic environment specified below. The user of the Pentacam® AXL should ensure that it is being used in such an environment.		
Emissions test	Compliance	Electromagnetic environment – guidance
RF emissions CISPR 11	Group 1	The Pentacam® AXL uses RF energy only for its internal function. Therefore, its RF emissions are very low and are not likely to cause any interference in nearby electronic equipment.
HF-emissions CISPR 11	Class B	
Harmonics emissions IEC 61000-3-2	Class A	
Voltage fluctuations / flicker emissions IEC 61000-3-3	complies	

Questions? Contact FDA/CDRH/OCE/DID at CDRH-FOISTATUS@fda.hhs.gov or (301) 796-8118

Records Processed under FOIA request 2016-2167; Released by CDRH on 09/06/2016

Guidance and manufacturer´s declaration electromagentic immunity, IEC 60601-1-2, 5.2.2.1, table 2			
Immunity test	**IEC 60601 test level**	**Compliance level**	**Electromagnetic environment – guidlines**
Electrostatic discharge (ESD) IEC 61000-4-2	± 6 kV contact ± 8 kV air	± 6 kV contact ± 8 kV air	Floors should be made of wood or concrete or covered with ceramic tiles. If the floor is covered with synthetic material, the relative humidity must be at least 30%.
Electrical Fast transient/bursts IEC 61000-4-4	± 2 kV for power supply lines ± 1 kV for input/ output lines	± 2 kV for power supply lines ± 1 kV for input/ output lines	Mains power quality should be that of a typical commercial or hospital environment.
Surge IEC 6100-4-5	± 1 kV kine(s) to line(s) ± 2 kV line(s) to earth	± 1 kV differential mode ± 2 kV line(s) to earth	Mains power quality should be that of a typical commercial or hospital environment.
Voltage dips, short interruptions, and voltage variations on power supply input lines IEC 61000-4-11	< 5% U_τ (> 95% dip in U_τ) for 0,5 cycle 40 % U_τ (60% dip in U_τ) for 5 cycles 70% U_τ (30% dip in U_τ) for 25 cycles <5% U_τ (> 95% dip in U_τ) for 5 s	< 5% U_τ (> 95% dip in U_τ) for 0,5 cycle 40 % U_τ (60% dip in U_τ) for 5 cycles 70% U_τ (30% dip in U_τ) for 25 cycles <5% U_τ (> 95% dip in U_τ) for 5 sec	Mains power quality should be that of a typical commercial or hospital environment. If the user of the Pentacam® AXL requires continued operation during power mains interruptions, it is recommended that the Pentacam® AXL be powered from an uninterruptible power supply or battery.
Power frequency (50/60Hz) magnetic field IEC 61000-4-8	3 A/m	3 A/m	Power frequency magnetic fields should be at levels characteristic of a typical location in a typical commercial or hospital environment.
Note: U_τ is the a.c. mains voltage prior to application of the test level.			

Questions? Contact FDA/CDRH/OCE/DID at CDRH-FOISTATUS@fda.hhs.gov or 301-796-8118

Records Processed under FOIA request 2016-2167; Released by CDRH on 09/06/2016

Guidance and manufacturer´s declaration electromagentic immunity, IEC 60601-1-2, 5.2.2.2, table 4

Immunity test	IEC 60601 test level	Compliance level	Electromagnetic environment – Guidelines
			Portable and mobile RF communications equipment should be used no closer to any part of Pentacam® AXL, including cables, than the recommended separation distance calculated from the equation applicable to the frequency of the transmitter. Recommended separation distance
Conducted RF IEC 61000-4-6	3 Vrms 150 KHz to 80 Mhz	V_{rms}= 3 V	$d = \left[\frac{3,5}{(V_1)}\right]\sqrt{P}$
Radiated RF IEC 61000-4-3	3 V/m 80 MHz to 2.5 GHz	E = 3 V/m	$d = \left[\frac{3,5}{(E_1)}\right]\sqrt{P}$ 80MHz to 800 MHz $d = \left[\frac{7}{(E_1)}\right]\sqrt{P}$ 800 MHz to 2.5 GHz where P is the maximum output power rating of the transmitter in watts (W) according to the transmitter manufacturer and d is the recommended separation distance in metres (m). Field strength from fixed RF transmitters, as determined by an electromagnetic site survey (a), should be less than the compliance level in each frequency range (b). Interface may occur in the vicinity of equipment marked with the following symbol:

Note 1:	At 80 Hz and 800 MHz, the higher frequency range applies.
Note 2:	These guidelines may not apply in all situations. Electromagnetic propagation is affected by absorption and reflection from structures, objects and people.

a. Field strengths from fixed transmitters, such as base stations for radio (cellular/cordless) telephones and land mobile radios, amateur radios, AM and FM radio broadcast, and TV broadcast cannot be predicted theoretically with accuracy. To assess the electromagnetic environment due to fixed RF transmitters, and electromagnetic site survey should be considered. If the measured field strength in the location in which the Pentacam® AXL is used exceeds the applicable RF compliance level above, the Pentacam® AXL should be observed to verify normal operation. If abnormal performance is observed, additional measures may be necessary, such as re-orienting or relocating the Pentacam® AXL.

b. Over the frequency range 150 KHz to 80 MHz, field strengths should be less than 3 V/m.

Questions? Contact FDA/CDRH/OCE/DID at CDRH-FOISTATUS@fda.hhs.gov or (301) 796-8118

Records Processed under FOIA request 2016-2167; Released by CDRH on 09/06/2016

Recommended separation distances between portable and mobile RF communications equipment and the Pentacam® AXL, IEC 60601-1-2, 5.2.2.2, table 6

The Pentacam® AXL in intended for us e in an electromagnetic environment in which radiated RF disturbances are controlled. The customer or the user of the Pentacam® AXL can help prevent electromagnetic interference by maintaining a minimum distance between portable and mobile RF communications equipment (transmitters) and the Pentacam® AXL as recommended below, according to the maximum output power of the communications equipment.

Rated maximum output power of transmitter W	Separation distance according to frequency of transmitter m		
	150 KHz to 80 Mhz d= 1.2 √P	80 MHz to 800 MHz d= 1.2 √P	800 MHz to 2.5 GHz d= 2.3 √P
0.01	0.12	0.12	0.23
0.1	0.38	0.38	0.73
1	1.2	1.2	2.3
10	3.80	3.80	7.3
100	12	12	23

For transmitters rated at a maximum output power not listed above, the recommended separation distance d in metres (m) can be estimated using the equation applicable to the frequency of the transmitter, where P is the maximum output power rating of the transmitter in watts (W) according to the transmitter manufacturer.

NOTE 1: At 80 MHz and 800 MHz, the separation distance for the higher frequency range applies.

NOTE 2: These guidelines may not apply in all situations. Electromagnetic propagation is affected by absorption and reflection from structures, objects and people.

Questions? Contact FDA/CDRH/OCE/DID at CDRH-FOISTATUS@fda.hhs.gov or 301-796-8118

Records Processed under FOIA request 2016-2167; Released by CDRH on 09/06/2016

22.3 Description of the Connection

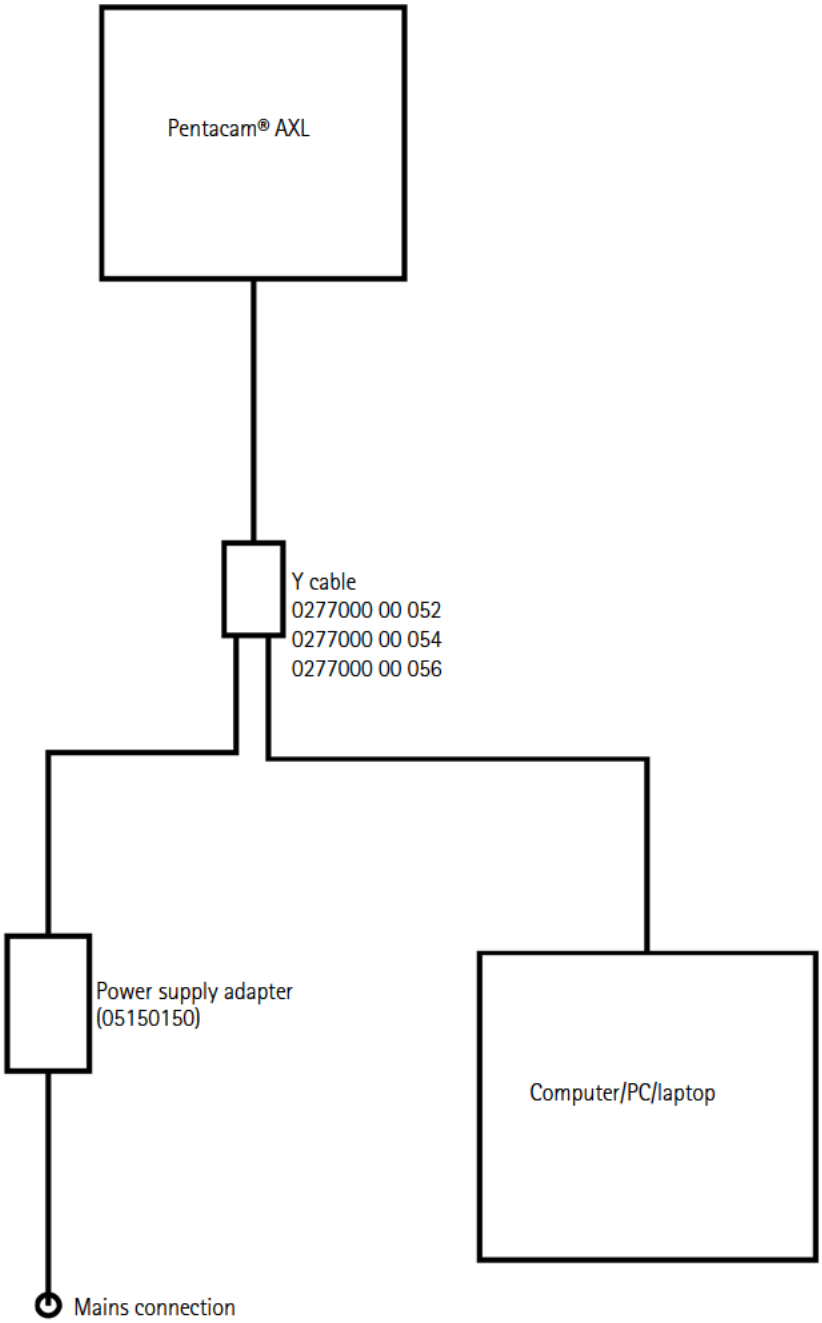

Questions? Contact FDA/CDRH/OCE/DID at CDRH-FOISTATUS@fda.hhs.gov or (301) 796-8118

22.4 Data Sheet HEMG 49-S240210-7 (05150150)

HiTRON

UNIVERSAL INPUT AC-DC MEDICAL & ITE APPLICATION EXTERNAL DESKTOP SWITCHING ADAPTER 48-50 WATTS GREEN POWER SINGLE OUTPUT HEMG49 SERIES

FEATURES:

- ACCOMMODATE UNIVERSAL AC INPUT
- MEET MEDICAL STANDARDS IEC60601 1 & ITE STANDARDS IEC60950 1
- EMI MEET EN 55011 & EN55022 / FCC CLASS B
- MEET ENERGY STAR LEVEL V & CEC LEVEL IV
- CE MARKING COMPLIANCE

SPECIFICATION

INPUT SPECIFICATION

Input Voltage: Typical 90-264Vac.
Input Connector: 3 pole AC inlet IEC320-C14(DT7) / 2 pole AC inlet IEC320-C8(DT8).
Input Frequency: 47-63Hz.
Inrush Current: 12Arms (52Apk) at 230Vac.
Input Current: Typical 0.91A at 115Vac/ 0.57A at 230Vac.
Dielectric Withstand: Meet IEC60601-1 & IEC60950-1.
EMI: Meet EN55011 & EN55022 / FCC Class B.
Hold-up Time: Typical 12mS at 115Vac. Typical 70mS at 230Vac.
Over Temp. Protection: Optional (NTC circuit).
Earth Leakage Current (Class I) : Less than 0.3 mA.
Touch Leakage Current (Class I & II) : Less than 0.1mA.
No Load Power: Less than 0.3W at 230Vac

OUTPUT SPECIFICATION

Output Voltage: See Ratings Chart.
Output Current: See Ratings Chart.
Output Wattage: Typical 48-50Watts.
Output Connector & Cord: Optional.
Line Regulation: Typical 0.1%.
Load Regulation: Typical ±1.5-3.0%.
Noise & Ripple: 1.0% peak to peak.
OVP: Built-in by latch circuit.
Adjustability: Factory set.
Over Current Protection (OCP):
Fully protected against output overload and short circuit.
The PSU will shut down after OCP is activated.
Consult the factory for OCP setting.

GENERAL SPECIFICATION

Efficiency: Typical 87%-88% (various with the output voltage)
Switching Frequency: Typical 65KHz.
Circuit Topology: Fixed Frequency Flyback circuit.
Transient Response: Output voltage returns in less than 5.5mS following a 50% load change.
Safety Standard: Meet Medical IEC60601-1 & ITE IEC60950-1, Class I for DT7(C14) or Class II for DT8(C8)

Operating Temperature: 0°C to +40°C.
Storage Temperature: -20 to +85°C.
Cooling: Free air convection.
Construction: Impact resistant thermo-plastic enclosure case.
Power Density: 3.14-3.27Watts. / Cubic inch.
Desktop Format.

NOTE: (1) All measurements are at nominal input, full load, and +25°C unless otherwise specified.
(2) Load regulation is measured at 115Vac or 230Vac in percentage to indicate the change in output voltage as the load varied from half load to full load (±%).
(3) The exact obtainable load regulation depends upon the output cord selected and load current.
(4) Due to requests in market and advances in technology, specifications subject to change without notice.

For the details of safety approval, please consult the factory.

-7-

Records Processed under FOIA request 2016-2167; Released by CDRH on 09/06/2016

OUTPUT VOLTAGE / CURRENT RATINGS CHART

SINGLE OUTPUT

MODEL NO.	AC INLET	O/P VOLTAGE	O/P CURRENT
HEMG49-S120400-7	IEC320-C14(DT7)	12.0Vdc	4.0A
HEMG49-S120400-8	IEC320-C8(DT8)	12.0Vdc	4.0A
HEMG49-S150330-7	IEC320-C14(DT7)	15.0Vdc	3.3A
HEMG49-S150330-8	IEC320-C8(DT8)	15.0Vdc	3.3A
HEMG49-S240210-7	IEC320-C14(DT7)	24.0Vdc	2.1A
HEMG49-S240210-8	IEC320-C8(DT8)	24.0Vdc	2.1A

MECHANICAL DIMENSIONS: MM [INCHES] **WEIGHT:** 373.0g (13.2 Oz.)

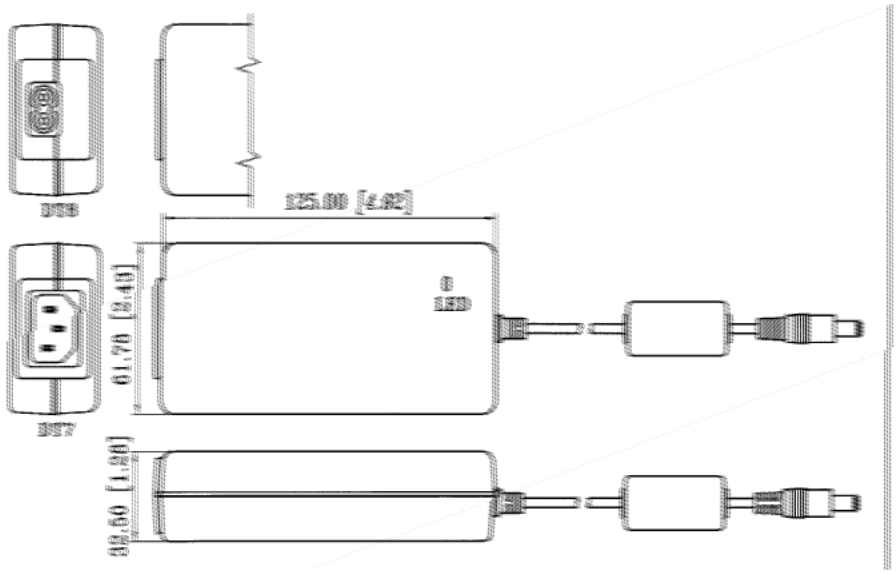

-8-

Questions? Contact FDA/CDRH/OCE/DID at CDRH-FOISTATUS@fda.hhs.gov or (301-796-8118

Records Processed under FOIA request 2016-2167; Released by CDRH on 09/06/2016

22.5 Clinical Studies

IOLMaster® 500

Measure	Pentacam AXL (Mean ± SD)	IOL Master (Mean ± SD)	Difference (Mean ± SD)	95% CI for Mean Difference	95% LoA for Difference
Axial Length [mm]	N=20 24.40 ± 2.88	N=20 24.43 ± 2.84	-0.027 ± 0.081	[-0.066; 0.011]	-0.187; 0.132
Radius Flat Meridian [mm]	N=20 7.76 ± 0.42	N=19 7.72 ± 0.44	0.027 ± 0.054	[0.001; 0.053]	-0.079; 0.133
Radius Steep Meridian [mm]	N=20 7.40 ± 0.38	N=19 7.35 ± 0.37	0.033 ± 0.067	[0.005; 0.065]	-0.098; 0.163
Mean Radius [mm]	N=20 7.58 ± 0.37	N=19 7.54 ± 0.39	0.030 ± 0.049	[0.006; 0.054]	-0.066; 0.126
Corneal Cylinder [D]	N=20 2.1 ± 1.6	N=19 2.2 ± 1.5	-0.04 ± 0.47	[-0.26; 0.19]	-0.95; 0.88
Corneal Cylinder Axis [°]	N=14 115.5 ± 67.8	N=14 110.4 ± 64.6	1.9 ± 6.6	[-1.3; 5.1]	-11.1; 14.9
Anterior Chamber Depth [mm]	-	N=19 4.3 ± 0.61	-	-	-
White-to White Distance [mm]	N=15 11.5 ± 0.5	N=20 11.8 ± 0.5	-0.29 ± 0.08	[-0.33; -0.24]	-0.45; -0.12

Questions? Contact FDA/CDRH/OCE/DID at CDRH-FOISTATUS@fda.hhs.gov or 301-796-8118

Records Processed under FOIA request 2016-2167; Released by CDRH on 09/06/2016

Pentacam®

Measure	Pentacam AXL (Mean ± SD)	Pentacam (Mean ± SD)	Difference (Mean ± SD)	95% CI for Mean Difference	95% LoA for Difference
CCT[µm]	N=113 559 ± 34	N=120 555 ± 35	2 ± 9	[0; 4]	-15; 19
Radius Flat Meridian [mm]	N=113 7.91 ± 0.31	N=120 7.89 ± 0.31	0.011 ± 0.032	[0.005; 0.017]	-0.051; 0.074
Radius Steep Meridian [mm]	N=113 7.76 ± 0.30	N=120 7.74 ± 0.30	0.009 ± 0.040	[0.001; 0.016]	-0.071; 0.088
Mean Radius [mm]	N=113 7.83 ± 0.30	N=120 7.82 ± 0.30	0.009 ± 0.031	[0.004; 0.015]	-0.051; 0.069
Corneal Cylinder [D]	N=113 0.8 ± 0.6	N=120 0.8 ± 0.6	0.0008± 0.23	[-0.04; 0.04]	-0.46; 0.46
Anterior Chamber Depth [mm]	N=113 3.26 ± 0.41	N=120 3.20 ± 0.40	0.05 ± 0.06	[0.03; 0.06]	-0.07; 0.16

Questions? Contact FDA/CDRH/OCE/DID at CDRH-FOISTATUS@fda.hhs.gov or (301) 796-8118

Records Processed under FOIA request 2016-2167; Released by CDRH on 09/06/2016

Repeatability and Reproducibility

Measure	Number of subjects	mean	Repeatability		Reproducability	
			SD	CV [%]	SD	CV [%]
Axial length [mm]	40	23.779	0.025	0.10	0.030	0.13
CCT[µm]	40	550	4	0.67	5	0.90
Radius flat (Rf) [mm]	40	7.85	0.012	0.15	0.017	0.21
Radius steep (Rs) [mm]	40	7.69	0.012	0.15	0.018	0.23
Mean Radi-us (Rm) [mm]	40	7.77	0.010	0.13	0.015	0.19
Corneal Cy-linder [D]	40	0.92	0.07	7.68	0.10	10.84
Axis flat Meridian [°]	40	102.0	4.9	4.76	6.35	6.22
ACD [mm]	40	3.53	0.022	0.61	0.026	0.75
WTW [mm]	40	11.8	0.04	0.37	0.08	0.70

Questions? Contact FDA/CDRH/OCE/DID at CDRH-FOISTATUS@fda.hhs.gov or 301-796-8118

Records Processed under FOIA request 2016-2167; Released by CDRH on 09/06/2016

Questions? Contact FDA/CDRH/OCE/DID at CDRH-FOISTATUS@fda.hhs.gov or (301) 796-8118

Records Processed under FOIA request 2016-2167; Released by CDRH on 09/06/2016

Attachment 4

Revised EN 60601-1-2:2007 (EMC) Test Report

(b)(4) Third Party Test Data

(b)(4) Third Party Test Data

(b)(4) Third Party Test Data

(b)(4) Third Party Test Data

(b)(4) Third Party Test Data

(b)(4) Third Party Test Data

(b)(4) Third Party Test Data

(b)(4) Third Party Test Data

(b)(4) Third Party Test Data

(b)(4) Third Party Test Data

(b)(4) Third Party Test Data

(b)(4) Third Party Test Data

(b)(4) Third Party Test Data

(b)(4) Third Party Test Data

(b)(4) Third Party Test Data

(b)(4) Third Party Test Data

(b)(4) Third Party Test Data

(b)(4) Third Party Test Data

(b)(4) Third Party Test Data

(b)(4) Third Party Test Data

(b)(4) Third Party Test Data

(b)(4) Third Party Test Data

(b)(4) Third Party Test Data

(b)(4) Third Party Test Data

(b)(4) Third Party Test Data

(b)(4) Third Party Test Data

(b)(4) Third Party Test Data

(b)(4) Third Party Test Data

(b)(4) Third Party Test Data

(b)(4) Third Party Test Data

(b)(4) Third Party Test Data

(b)(4) Third Party Test Data

(b)(4) Third Party Test Data

(b)(4) Third Party Test Data

(b)(4) Third Party Test Data

(b)(4) Third Party Test Data

(b)(4) Third Party Test Data

(b)(4) Third Party Test Data

(b)(4) Third Party Test Data

(b)(4) Third Party Test Data

(b)(4) Third Party Test Data

(b)(4) Third Party Test Data

(b)(4) Third Party Test Data

(b)(4) Third Party Test Data

(b)(4) Third Party Test Data

(b)(4) Third Party Test Data

(b)(4) Third Party Test Data

(b)(4) Third Party Test Data

(b)(4) Third Party Test Data

(b)(4) Third Party Test Data

(b)(4) Third Party Test Data

(b)(4) Third Party Test Data

(b)(4) Third Party Test Data

Records Processed under FOIA request 2016-2167; Released by CDRH on 09/06/2016

Attachment 5

Pentacam® Risk Management File Excerpts

(b)(4)

(b)(4)

(b)(4)

(b)(4)

(b)(4)

Records Processed under FOIA request 2016-2167; Released by CDRH on 09/06/2016

7. Overall residual risk acceptability [ISO 14971 clause 7] [ISO 14971 Annex D.7] [ISO 14971 Annex J]

After all risk control measures have been implemented and verified, the overall residual risk of the OCULUS Pentacam®, Pentacam® HR & Pentacam® AXL is evaluated as acceptable.

None of the residual risks is beyond the in chapter 3.4.5 defined criteria (Based on the risk levels, the overall residual risk for a device will be considered acceptable if none of the identified hazards leads to an unacceptable risk). See also chapter 5.2- Risk evaluation matrix with risk control measures.

The information for safety and the disclosure of residual risks is provided by the instructions for use and /or labels at the device or warnings in the user interface. See also chapter 6.1 - Risk control measures.

The medical benefits from using the OCULUS Pentacam®, Pentacam® HR & Pentacam® AXL products clearly overweight the overall residual risk.

Questions? Contact FDA/CDRH/OCE/DID at CDRH-FOISTATUS@fda.hhs.gov or 301-796-8118

Records Processed under FOIA request 2016-2167; Released by CDRH on 09/06/2016

Attachment 6

Revised ISO 15004-2:2007-06 Test Report

(b)(4) Third Party Test Data

(b)(4) Third Party Test Data

(b)(4) Third Party Test Data

(b)(4) Third Party Test Data

(b)(4) Third Party Test Data

(b)(4) Third Party Test Data

(b)(4) Third Party Test Data

(b)(4) Third Party Test Data

(b)(4) Third Party Test Data

(b)(4) Third Party Test Data

(b)(4) Third Party Test Data

(b)(4) Third Party Test Data

(b)(4) Third Party Test Data

(b)(4) Third Party Test Data

(b)(4) Third Party Test Data

(b)(4) Third Party Test Data

(b)(4) Third Party Test Data

(b)(4) Third Party Test Data

(b)(4) Third Party Test Data

(b)(4) Third Party Test Data

(b)(4) Third Party Test Data

(b)(4) Third Party Test Data

(b)(4) Third Party Test Data

(b)(4) Third Party Test Data

(b)(4) Third Party Test Data

Records Processed under FOIA request 2016-2167; Released by CDRH on 09/06/2016

Attachment 7

Revised 510(k) Summary

Records Processed under FOIA request 2016-2167; Released by CDRH on 09/06/2016

510(k) SUMMARY

OCULUS Pentacam® AXL

General Information

Applicant:

OCULUS Optikgeräte GmbH
Müncholzhäuserstr. 29
35582 Wetzlar
Germany
Phone: +49(0)641 2005-0
Fax +49(0)641 2005-255

Contact Person:

Mr. Eckhard Loh
Head of Quality and Regulatory Affairs
OCULUS Optikgeräte GmbH
Müncholzhäuserstr. 29
35582 Wetzlar
Germany
Phone: +49(0)641 2005-0
Fax +49(0)641 2005-255
Summary Prepared: December 18, 2015

Device Information

Classification Name:	Device, analysis, anterior segment (AC-powered slitlamp biomicroscope)
Trade/Propriety Name:	Pentacam® AXL
Regulation Number:	886.1850
Device class:	II
Product Code:	MXK, HJO

Predicate Devices

Carl Zeiss Meditec AG, IOLMASTER 500 (K122418)
OCULUS Optikgeräte GmbH, Pentacam Scheimpflug Camera (K030719)

Questions? Contact FDA/CDRH/OCE/DID at CDRH-FOISTATUS@fda.hhs.gov or 301-796-8118

Records Processed under FOIA request 2016-2167; Released by CDRH on 09/06/2016

Intended Use / Indications for Use

The intended use of the Pentacam® AXL is defined as:

> The Pentacam® is designed to take photos of the anterior segment of the eye which includes the cornea, pupil, anterior chamber and lens of the eye. To evaluate:
>
> - corneal shape,
> - analyze condition of the lens (opaque crystalline lens),
> - analyze the anterior chamber angle,
> - analyze anterior chamber depth,
> - analyze the volume of the anterior chamber,
> - analyze anterior or posterior cortical opacity,
> - analyze the location of cataracts (nuclear, sub capsular and or cortical), using cross slit imaging with densitometry,
> - corneal thickness,
> - axial length,
> - white-to-white distance.
>
> The Pentacam® AXL also performs calculations to assist physicians in determining the power of the intraocular lens for implantation.

Product Description/Technological Characteristics

The Pentacam AXL is designed to take photos of the anterior segment of the eye to measures eye components such as Axial length, Corneal thickness, Anterior chamber depth, Corneal curvature, Corneal cylinder, Corneal cylinder axis and White-to-white-distance. The measured parameters can be used by physicians to calculate the power of the intraocular lens (IOL) implanted during a cataract surgery.

While rotating around the eye, the Pentacam® AXL captures Scheimpflug images of the anterior eye segment through varying axes. The Scheimpflug images created during an examination are transmitted to the connected PC.
The axial length of the eye is measured by interferometry.

Scheimpflug images can be captured within maximum two seconds. Up to 138,000 genuine height values are measured and analyzed from the Scheimpflug images.

The Scheimpflug images are the basis for the height data which are used to calculate a mathematical 3D model of the anterior eye segment.

The mathematical 3D model, corrected for eye movements, provides the basis for all subsequent analysis.

Questions? Contact FDA/CDRH/OCE/DID at CDRH-FOISTATUS@fda.hhs.gov or 301-796-8118

Records Processed under FOIA request 2016-2167; Released by CDRH on 09/06/2016

Summary of clinical results

Comparison Pentacam AXL with IOL Master

A clinical study was performed to compare the parameters axial length (AL), corneal curvature flat meridian (Rf), corneal curvature steep meridian (Rs), corneal cylinder (Astig), corneal cylinder axis (Axis flat), anterior chamber depth (ACD), White-to-White-distance (WTW) measured by the Pentacam AXL with those obtained by the IOL Master 500 (K122418; Carl Zeiss Meditec AG, Jena, Germany) as predicate device

Eighty (80) subject eyes were assessed in the first Agreement study, 20 eyes in each of the four eye populations.

The four eye populations consisted of:

1. Normal eyes (phakic eyes without cataracts or corneal disease);
2. Eyes with cataracts;
3. Eyes with abnormal corneal shape (including eyes post-keratorefractive surgery), and
4. Eyes without a natural lens (including aphakic and pseudophakic eyes);

Records Processed under FOIA request 2016-2167; Released by CDRH on 09/06/2016

Eye Population total

Eighty eyes were assessed in the agreement portion of the study with IOL Master 500 as predicated device. Mean age was 49.2 ± 16.6 years (minimum age was 17, maximum 79 years).

Table 1 shows the descriptive statistics for all parameters, the mean differences ± SD, the confidence intervals for the mean differences and the Limit of Agreement for the differences.

Measure	Pentacam AXL (Mean ± SD)	IOL Master (Mean ± SD)	Difference (Mean ± SD)	95% CI for Mean Difference	95% LoA for Difference
Axial Length [mm]	N=80 24.23 ± 1.73	N=80 24.23 ± 1.71	-0.003 ± 0.058	[-0.016; 0.010]	(-0.116; 0.110)
Radius Flat Meridian [mm]	N=76 7.86 ± 0.35	N=79 7.82 ± 0.38	0.024 ± 0.044	[0.014; 0.034]	(-0.063; 0.111)
Radius Steep Meridian [mm]	N=76 7.58 ± 0.37	N=79 7.51 ± 0.44	0.037 ± 0.058	[0.024; 0.051]	(-0.077; 0.152)
Mean Radius (Rm) [mm]	N=76 7.72 ± 0.34	N=79 7.67 ± 0.39	0.030 ± 0.038	[0.022; 0.040]	(-0.045; 0.106)
Corneal Cylinder [D]	N=76 1.6 ± 1.4	N=79 1.8 ± 1.7	-0.10 ± 0.45	[-0.20; 0.01]	(-0.99; 0.79)
Corneal Cylinder Axis [°]	N=76 102.0 ± 71.8	N=79 97.6 ± 69.6	3,6 ± 13.6	[0.4; 6.7]	(-23.0; 30.2)
Anterior Chamber Depth [mm]	N=60 3.53 ± 0.36	N=60 3.48 ± 0.36	0.05 ± 0.10	[-0.03; 0.08]	(-0.14; 0.24)
White-to White Distance [mm]	N=68 11.69 ± 0.38	N=73 11.95 ± 0.43	-0.26 ± 0.16	[-0.30; -0,22]	(-0.57; 0.04)

Records Processed under FOIA request 2016-2167; Released by CDRH on 09/06/2016

Eye Population Normal

Among the 80 eyes were 20 eyes of healthy patients without any known corneal pathology and without cataract. Mean age was 42.6 ± 14 years.

Table 2 shows the descriptive statistics for all parameters, the mean differences ± SD, the confidence interval for the mean differences and the Limit of Agreement for all parameters of the 20 normal eyes.

Measure	Pentacam AXL (Mean ± SD)	IOL Master (Mean ± SD)	Difference (Mean ± SD)	95% CI for Mean Difference	95% LoA for Difference
Axial Lenght [mm]	N=20 24.22 ± 1.06	N=20 24.24 ± 1.06	-0.014 ± 0.057	[-0.041; 0.012]	-0.126; 0.098
Radius Flat Meridian [mm]	N=19 7.85 ± 0.24	N=20 7.86 ± 0.29	0.03 ± 0.03	[0.02; 0.05]	-0.03; 0.09
Radius Steep Meridian [mm]	N=19 7.66 ± 0.18	N=20 7.67 ± 0.26	0.04 ± 0.04	[0.02; 0.05]	-0.03; 0.11
Mean Radius [mm]	N=19 7.75 ± 0.20	N=20 7.76 ± 0.27	0.03 ± 0.02	[0.02; 0.04]	-0.01; 0.08
Corneal Cylinder [D]	N=19 1.03 ± 0.55	N=20 1.05 ± 0.54	-0.04 ± 0.28	[-0.18; 0.09]	-0.60; 0.51
Corneal Cylinder Axis [°]	N=19 81.7 ± 80.7	N=20 81.7 ± 79.9	5.0 ± 21.0	[-5.1; 15.2]	-36.2; 46.2
Anterior Chamber Depth [mm]	N=20 3.57 ± 0.28	N=20 3.51 ± 0.26	0.06 ± 0.09	[0.02; 0.10]	-0.12; 0.24
White-to White Distance [mm]	N=20 11.7 ± 0.3	N=14 12.0 ± 0.3	-0.24 ± 0.23	[-0.38; -0.11]	-0.70; 0.21

Questions? Contact FDA/CDRH/OCE/DID at CDRH-FOISTATUS@fda.hhs.gov or 301-796-8118

Records Processed under FOIA request 2016-2167; Released by CDRH on 09/06/2016

Eye Population Cataract

In this group patients were included with cataract but without any other known ocular pathology. Mean age of the 20 eyes was 57 ± 14 years.

Table 3 shows the descriptive statistics for all parameters, the mean difference ± SD, the confidence interval for the mean differences and the limits of agreement (LoA) for the differences of the 20 eyes with cataract.

Measure	Pentacam AXL (Mean ± SD)	IOL Master (Mean ± SD)	Difference (Mean ± SD)	95% CI for Mean Difference	95% LoA for Difference
Axial Lenght [mm]	N=20 24.28 ± 1.24	N=20 24.27 ± 1.25	0.014 ± 0.039	[-0.004; 0.032]	-0.062; 0.091
Radius Flat Meridian [mm]	N=20 7.83 ± 0.29	N=20 7.81 ± 0.31	0.018 ± 0.048	[-0.005; 0.040]	-0.076; 0.112
Radius Steep Meridian [mm]	N=20 7.68 ± 0.28	N=20 7.65 ± 0.28	0.031 ± 0.037	[0.013; 0.048]	-0.043; 0.104
Mean Radius (Rm) [mm]	N=20 7.76 ± 0.28	N=20 7.73 ± 0.29	0.024 ± 0.033	[0.009; 0.040]	-0.041; 0.090
Corneal Cylinder [D]	N=20 0.83 ± 0.42	N=20 0.90 ± 0.60	-0.07 ± 0.28	[-0.20; 0.06]	-0.62; 0.48
Corneal Cylinder Axis [°]	N=20 102.9 ± 68.6	N=20 100.4 ± 67.3	2.6 ± 11.0	[-2.6; 7.8]	--19.1; 24.2
Anterior Chamber Depth [mm]	N=20 3.37 ± 0.39	N=20 3.29 ± 0.37	0.08 ± 0.13	[0.02; 0.14]	-0.02; 0.33
White-to White Distance [mm]	N=15 11.6 ± 0.4	N=19 11.9 ± 0.5	-0.26 ± 0.08	[-0.30; -0.21]	-0.41; -0.11

Questions? Contact FDA/CDRH/OCE/DID at CDRH-FOISTATUS@fda.hhs.gov or 301-796-8118

Records Processed under FOIA request 2016-2167; Released by CDRH on 09/06/2016

Eye Population abnormal corneal shape

In this group patients were included that had either a corneal pathology or previous refractive surgery (LASIK or PRK). Mean patient age in this subgroup was 39 ± 11 years.

Table 4 shows the descriptive statistics for all parameters, the mean differences ± SD. the confidence interval for the mean differences and the Limit of Agreement (LoA) for the differences of the 20 eyes with cataract.

Measure	Pentacam AXL (Mean ± SD)	IOL Master (Mean ± SD)	Difference (Mean ± SD)	95% CI for Mean Difference	95% LoA for Difference
Axial Lenght [mm]	N=20 24.00 ± 1.15	N=20 23.99 ± 1.13	0.016 ± 0.030	[0.003; 0.030]	-0.042; 0.075
Radius Flat Merdian [mm]	N=17 8.02 ± 0.42	N=20 7.89 ± 0.47	0.020 ± 0.044	[-0.002; 0.042]	-0.007; 0.106
Radius Steep Meridian [mm]	N=17 7.56 ± 0.52	N=20 7.37 ± 0.64	0.051 ± 0.086	[0.006; 0.095]	-0.118; 0.219
Mean Radius [mm]	N=17 7.79 ± 0.44	N=20 7.63 ± 0.53	0.035 ± 0.047	[0.011; 0.060]	-0.129; 0.059
Corneal Cylinder [D]	N=17 2.6 ± 1.9	N=20 3.2 ± 2.3	-0.26 ± 0.69	[-0.62; 0.10]	-1.62; 1.10
Corneal Cylinder Axis [°]	N=18 107.7 ± 71.2	N=18 98.7 ± 67.7	5.0 ± 12.4	[-1.4; 11.3]	-19.4; 29.3
Anterior Chamber Depth [mm]	N=18 3.64 ± 0.37	N=18 3.63 ± 0.38	0.01 ± 0.05	[-0.01; 0.04]	-0.09; 0.12
White-to White Distance [mm]	N=18 11.9 ± 0.3	N =20 12.1 ± 0.3	-0.26 ± 0.18	[-0.35; -0.17]	-0.62; 0.10

Questions? Contact FDA/CDRH/OCE/DID at CDRH-FOISTATUS@fda.hhs.gov or 301-796-8118

Records Processed under FOIA request 2016-2167; Released by CDRH on 09/06/2016

Eyes without natural lens

In this group eyes without a natural crystalline lens were analyzed. All 20 eyes had cataract surgery before and the crystalline lens was replaced by an intraocular lens (IOL). Mean patient age was 60 ± 15 years.

Table 5 shows the descriptive statistics for all parameters. the mean difference ± SD. the confidence interval for the mean differences and the Limit of Agreement (LoA) for the differences of the 20 eyes with cataract.

Measure	Pentacam AXL (Mean ± SD)	IOL Master (Mean ± SD)	Difference (Mean ± SD)	95% CI for Mean Difference	95% LoA for Difference
Axial Length [mm]	N=20 24.40 ± 2.88	N=20 24.43 ± 2.84	-0.027 ± 0.081	[-0.066; 0.011]	-0.187; 0.132
Radius Flat Meridian [mm]	N=20 7.76 ± 0.42	N=19 7.72 ± 0.44	0.027 ± 0.054	[0.001; 0.053]	-0.079; 0.133
Radius Steep Meridian [mm]	N=20 7.40 ± 0.38	N=19 7.35 ± 0.37	0.033 ± 0.067	[0.005; 0.065]	-0.098; 0.163
Mean Radius [mm]	N=20 7.58 ± 0.37	N=19 7.54 ± 0.39	0.030 ± 0.049	[0.006; 0.054]	-0.066; 0.126
Corneal Cylinder [D]	N=20 2.1 ± 1.6	N=19 2.2 ± 1.5	-0.04 ± 0.47	[-0.26; 0.19]	-0.95; 0.88
Corneal Cylinder Axis [°]	N=14 115.5 ± 67.8	N=14 110.4 ± 64.6	1.9 ± 6.6	[-1.3; 5.1]	-11.1; 14.9
Anterior Chamber Depth [mm]	-	N=19 4.3 ± 0.61	-	-	-
White-to White Distance [mm]	N=15 11.5 ± 0.5	N=20 11.8 ± 0.5	-0.29 ± 0.08	[-0.33; -0.24]	-0.45; -0.12

The Pentacam® AXL demonstrated agreement to the IOL Master 500 (K122418; Carl Zeiss Meditec AG, Jena, Germany) for the assessment of axial length (AL), corneal curvature flat meridian (Rf), corneal curvature steep meridian (Rs), corneal cylinder (Astig), corneal cylinder axis (Axis flat), anterior chamber depth (ACD) and White-to-White-distance (WTW) parameters in normal eyes, eyes with cataracts, eyes with Abnormal corneal shape and eyes without natural lens.

Questions? Contact FDA/CDRH/OCE/DID at CDRH-FOISTATUS@fda.hhs.gov or 301-796-8118

Records Processed under FOIA request 2016-2167; Released by CDRH on 09/06/2016

Agreement between Pentacam AXL and Pentacam

In a second agreement study between the Pentacam® AXL and Pentacam® (K030719, OCULUS Optikgeräte GmbH, Wetzlar, Germany) as predicated device was tested. Both devices are using an automatic rotating Scheimpflug camera in order to derive a three dimensional model of the anterior segment. Based on this model all parameters that describe corneal shape such as mean radius of curvature or corneal thickness are calculated. The anterior chamber depth is also calculated based on the rotating Scheimpflug camera. As both devices are using the same measuring technique a high agreement between the two devices can be expected.

For this study 138 eyes of 138 patients were measured with both devices. Mean age was 69 ±11 years (youngest 26 years. oldest 90 years), 78 males (57%) and 60 (43 %) females were measured.

Table 6 shows the agreement results for the analyzed parameters Central Corneal Thickness (CCT). Radius Flat Meridian (Rf), Radius Steep Meridian (Rs), mean Radius of Curvature (Rm), Corneal Cylinder (Astigmatism) and Anterior Chamber Depth (ACD).

Measure	Pentacam AXL (Mean ± SD)	Pentacam (Mean ± SD)	Difference (Mean ± SD)	95% CI for Mean Difference	95% LoA for Difference
CCT[µm]	N=113 559 ± 34	N=120 555 ± 35	2 ± 9	[0; 4]	-15; 19
Radius Flat Meridian [mm]	N=113 7.91 ± 0.31	N=120 7.89 ± 0.31	0.011 ± 0.032	[0.005; 0.017]	-0.051; 0.074
Radius Steep Meridian [mm]	N=113 7.76 ± 0.30	N=120 7.74 ± 0.30	0.009 ± 0.040	[0.001; 0.016]	-0.071; 0.088
Mean Radius [mm]	N=113 7.83 ± 0.30	N=120 7.82 ± 0.30	0.009 ± 0.031	[0.004; 0.015]	-0.051; 0.069
Corneal Cylinder [D]	N=113 0.8 ± 0.6	N=120 0.8 ± 0.6	0.0008± 0.23	[-0.04; 0.04]	-0.46; 0.46
Anterior Chamber Depth [mm]	N=113 3.26 ± 0.41	N=120 3.20 ± 0.40	0.05 ± 0.06	[0.03; 0.06]	-0.07; 0.16

The Pentacam® AXL demonstrated agreement to the Pentacam® (K030719, OCULUS Optikgeräte GmbH, Wetzlar, Germany) for the assessment of Central Corneal Thickness (CCT), Radius Flat Meridian (Rf), Radius Steep Meridian (Rs), mean Radius of Curvature (Rm), Corneal Cylinder (Astigmatism) and Anterior Chamber Depth (ACD).

Records Processed under FOIA request 2016-2167; Released by CDRH on 09/06/2016

In-house Precision Testing: Results

40 eyes of 40 subjects were assessed in the Precision part of the study. To obtain repeatability values three measurements were performed on the same eye and on the same instrument under the same conditions. Mean age of the subjects involved in this study was 35 ± 9 years. 20 right and 20 left eyes were analyzed. 12 females and 28 males were involved in the study.

Table 7 shows the results of the Precision study for the analyzed parameters axial length (AL), mean radius of curvature, corneal cylinder (astigmatism), cylinder axis (axis flat meridian), central corneal thickness (CCT) and anterior chamber depth (ACD).

Measure	Number of subjects	mean	Repeatability		Reproducibility	
			SD	CV [%]	SD	CV [%]
Axial length [mm]	40	23.779	0.025	0.10	0.030	0.13
CCT[µm]	40	550	4	0.67	5	0.90
Radius flat (Rf) [mm]	40	7.85	0.012	0.15	0.017	0.21
Radius steep (Rs) [mm]	40	7.69	0.012	0.15	0.018	0.23
Mean Radius (Rm) [mm]	40	7.77	0.010	0.13	0.015	0.19
Corneal Cylinder [D]	40	0.92	0.07	7.68	0.10	10.84
Axis flat Meridian [°]	40	102.0	4.9	4.76	6.35	6.22
ACD [mm]	40	3.53	0.022	0.61	0.026	0.75
WTW [mm]	40	11.8	0.04	0.37	0.08	0.70

All parameters showed reproducibility and repeatability with coefficients of variation in most cases of less than one percent. Axial length measurement showed repeatability and reproducibility with a coefficient of variation of close to zero percent and intraclass correlation coefficients close to 1. Two parameters that had CV values above 1 percent were corneal cylinder measurements and the determination of axis of flat meridian. In both cases the coefficient of variation was still below 10 percent which is still reflecting repeatability.

Questions? Contact FDA/CDRH/OCE/DID at CDRH-FOISTATUS@fda.hhs.gov or 301-796-8118

Records Processed under FOIA request 2016-2167; Released by CDRH on 09/06/2016

Substantial Equivalence

The Pentacam® AXL is as safe and effective as the IOLMASTER 500 and the Pentacam®. The Pentacam® AXL has the same intended use and similar indications, technological characteristics, and principles of operation as its predicate devices. The minor technological differences between the Pentacam® AXL and its predicate devices raise no new issues of safety or effectiveness. Performance data demonstrates that the Pentacam® AXL is as safe and effective as IOLMASTER 500 and Pentacam®. Thus, the Pentacam® AXL is substantially equivalent.

Questions? Contact FDA/CDRH/OCE/DID at CDRH-FOISTATUS@fda.hhs.gov or 301-796-8118