U.S. Department of Health & Human Services

Food and Drug Administration

SAVE REQUEST

USER:	(kml)
FOLDER:	K150042 - 274 pages
COMPANY:	()
PRODUCT:	WOUND DRAIN CATHETER SYSTEM (OTK)
SUMMARY:	Product: PLEURAFLOW SYSTEM
DATE REQUESTED:	Nov 4, 2015
DATE PRINTED:	Nov 4, 2015
Note:	Printed

K150042

CLEARFLOW
ACTIVE CLEARANCE TECHNOLOGY

FDA CDRH DMC
JAN 09 2015
Received

January 7, 2015

U.S. Food and Drug Administration Center for
Devices and Radiological Heath Document Mail
Center – WO66-G609 10903 New Hampshire
Avenue
Silver Spring, MD 20993-0002

Re: Traditional 510(k) Premarket Notification PleuraFlow® System similar to predicate, K093565 by ClearFlow Inc. (AKA Clear Catheter Systems Inc.)

In accordance with Section 510(k) of the Federal Food, Drug and Cosmetic Act, as amended, and in conformance with Title 21 of the Code of Federal Regulations Part 807 (21 CFR §807), Subpart B, this 510(k) Premarket Notification is being submitted prior to the date when ClearFlow proposes to introduce into interstate commerce, for commercial distribution, the ClearFlow PleuraFlow® System. No applicable mandatory performance standards or special controls exist for this device.

Per the instructions accessed at http://www.fda.gov/cdrh/elecsub.html, an electronic copy is being provided with this submission and it is an exact duplicate of the original paper submission.

This submission contains methods, data, and analysis of these data, which the Sponsor considers "Trade Secret", commercially privileged and confidential. In accordance with 21 CFR §20.61, this information may not be disclosed to the public in accordance with Freedom of Information (FOI) Act. This submission follows the format suggested in FDA's *Guidance for Industry and FDA Staff: Format for Traditional and Abbreviated 510(k)s*, dated August 12, 2005 and updated on November 17, 2005. In accordance with the referenced guidance, the following details are being provided in this cover letter:

- Submission Type: Traditional 510(k)
- Trade Name: PleuraFlow® System
- Recommended classification regulation: 21 CFR 878.4780; Powered suction pump.
- Common name: Introduction/drainage; wound drain catheter system
- Class: II

- Panel: General & Plastic Surgery
- Product Codes: Primary—OTK; Subsequent—GBX
- Basis for submission: PleuraFlow®System is the same as previously cleared under 510(k) #(K093565). The basis for submission is to amend the Indication for Use based on data obtained from current product's users during post market evaluation.

Design and Use of the Device

Question	Yes	No
Is the device intended for prescription use (21 CFR 801 Subpart D)? A	X	
Is the device intended for over-the-counter use (21 CFR 807 Subpart C)?		X
Does the device contain components derived from a tissue or other biologic source?		X
Is the device provided sterile?	X	
Is the device intended for single use?	X	
Is the device a reprocessed single use device?		X
If yes, does this device type require reprocessed validation data?		N/A
Does the device contain a drug?		X
Does the device contain a biologic?		X
Does the device use software?		X
Does the submission include clinical information? **It includes Post market study**		N/A

The official contact person for this submission is the undersigned.

Sincerely,

Dov Gal

Dov Gal, DVM, MBA
ClearFlow, Inc.
1630 S. Sunkist t. Suite E
Anaheim CA 92806
Ph: 714.916.5014
Fax: 714.916.5019
Email: dgal@clearflow.com

Official Correspondent for ClearFlow, Inc.

Acceptance Checklist
for Traditional 510(k)s

(should be completed within 15 days of DCC receipt)

The following information is not intended to serve as a comprehensive review.

510(k) Number: _____ **Date Received by DCC:** _____

Lead Reviewer Name:_____**Branch:**_____**Division:**_____**Office:** _____

Note: If an element is left blank on the checklist, it does not mean the checklist is incomplete; it means the reviewer did not assess the element during RTA and that element will be assessed during substantive review.

Preliminary Questions		
Answers in the shaded blocks indicate consultation with Center advisor is needed.	**Yes**	**No**
1. Is the product a device (per section 201(h) of the FD&C Act) or a combination product (per 21 CFR 3.2(e)) with a device constituent part subject to review in a 510(k)? If it appears not to be a device (per section 201(h) of the FD&C Act) or such a combination product, or you are unsure, consult with the CDRH Jurisdictional Officer or the CBER Office Jurisdiction Liaison to determine the appropriate action, and inform division management. *Provide a summary of the Jurisdictional Officer's/Liaison's determination.* If the product does not appear to be a device or such a combination product, mark "No."	X	
Comments: Device		
2. Is the application with the appropriate Center? If the product is a device or a combination product with a device constituent part, is it subject to review by the Center in which the submission was received? If you believe the application is not with the appropriate Center or you are unsure, consult with the CDRH Jurisdictional Officer or CBER Office Jurisdiction Liaison to determine the appropriate action and inform your division management. *Provide a summary of the Jurisdictional Officer's/Liaison's determination.* If application should not be reviewed by your Center mark "No."	X	
Comments: General and Plastic Surgery		
3. If a Request for Designation (RFD) was submitted for the device or combination product with a device constituent part and assigned to your center, identify the RFD # and confirm the following:	N/A	

a) Is the device or combination product the same (e.g., design, formulation) as that presented in the RFD submission? **b) Are the indications for use for the device or combination product identified in the 510(k) the same as those identified in the RFD submission?** If you believe the product or the indications presented in the 510(k) have changed from the RFD, or you are unsure, consult with the CDRH Jurisdictional Officer or appropriate CBER Jurisdiction Liaison to determine the appropriate action and inform your division management. *Provide summary of Jurisdictional Officer's/Liaison's determination.* If the answer to either question above is no, mark "No." If there was no RFD, skip this question.		
Comments: N/A		
4. Is this device type eligible for a 510(k) submission? If a 510(k) does not appear to be appropriate (e.g., Class III type and PMA required, or Class I or II type and 510(k)-exempt), you should consult with the CDRH 510(k) Program Director or appropriate CBER staff during the acceptance review. If 510(k) is not the appropriate regulatory submission, mark "No."	x	
Comments: The product is similar to predicate Class II		
5. Is there a pending PMA for the same device with the same indications for use? If yes, consult division management and the CDRH 510(k) Program Director or appropriate CBER staff to determine the appropriate action.		x
Comments:		
6. If clinical studies have been submitted, is the submitter the subject of an Application Integrity Policy (AIP)? If yes, consult with the CDRH Office of Compliance/Division of Bioresearch Monitoring (OC/DBM - BIMO) or CBER Office of Compliance and Biologics Quality/Division of Inspections and Surveillance/Bioresearch Monitoring Branch (OCBQ/DIS/BMB) to determine the appropriate action. Check on web at http://www.fda.gov/ICECI/EnforcementActions/ApplicationIntegrityPolicy/ucm134453.htm.		X NA

If the answer to 1 or 2 appears to be "No," then stop review of the 510(k) and issue the "Original Jurisdictional Product" letter.
If the answer to 3a or 3b appears to be "No," then stop the review and contact the CDRH Jurisdictional Officer or CBER Office of Jurisdiction Liaison.
If the answer to 4 is "No", the lead reviewer should consult division management and other Center resources to determine the appropriate action.
If the answer to 5 is "Yes," then stop review of the 510(k), contact the CDRH 510(k) Staff and PMA Staff, or appropriate CBER staff.

If the answer to 6 is "Yes," then contact CDRH/OC/DBM – BIMO or CBER/OCBQ/DIS/BMB, provide a summary of the discussion with the BIMO Staff, and indicate BIMO's recommendation/action.

Organizational Elements *Failure to include these items alone generally should not result in an RTA designation*		
	Yes	**No**
a. Submission contains Table of Contents	☒	☐
b. Each section is labeled (e.g., headings or tabs designating Device Description section, Labeling section, etc.)	☒	☐
c. All pages of the submission are numbered *All pages should be numbered in such a manner that information can be referenced by page number. This may be done either by consecutively numbering the entire submission, or numbering the pages within a section (e.g., 12-1, 12-2…).*	x	☐
d. Type of 510(k) is identified– traditional, abbreviated, or special *If type of 510(k) is not designated, review as a traditional*	x	☐
Comments: Traditional		

Elements of a Complete Submission (RTA Items) **(21 CFR 807.87 unless otherwise indicated)** Submission should be designated RTA if not addressed						
Check "Yes" if item is present, "N/A" if it is not needed and "No" if it is not included but needed. • Any "No" answer will result in a "Refuse to Accept" decision. • Each element on the checklist should be addressed within the submission. The submitter may provide a rationale for omission for any criteria that are deemed not applicable. If a rationale is provided, the criterion is considered present (Yes). An assessment of the rationale will be considered during the review of the submission.				**Yes**	**N/A**	**No**
A.	**Administrative**					
	1.	All content used to support the submission is written in English (including translations of test reports, literature articles, etc.)		☐ X		☐
		Comments:				
	2.	Submission identifies the following (such as in CDRH Premarket Review Submission Cover Sheet (Form 3514) or 510(k) cover letter):		X ☐		☐
		a.	Device trade name or proprietary name Pages 2,4,5,14	X		
		b.	Device common name pages 5,14	X		

Elements of a Complete Submission (RTA Items) **(21 CFR 807.87 unless otherwise indicated)** Submission should be designated RTA if not addressed						
Check "Yes" if item is present, "N/A" if it is not needed and "No" if it is not included but needed.						
	• Any "No" answer will result in a "Refuse to Accept" decision. • Each element on the checklist should be addressed within the submission. The submitter may provide a rationale for omission for any criteria that are deemed not applicable. If a rationale is provided, the criterion is considered present (Yes). An assessment of the rationale will be considered during the review of the submission.			**Yes**	**N/A**	**No**
		c.	Device class and panel or Classification regulation or Statement that device has not been classified with rationale for that conclusion	X		
		Comments: See pages 2,5,9,14				
	3.	Submission contains Indications for Use Statement with Rx and/or OTC designated (see also 21 CFR 801.109) *Submitter should use format appropriate for the reviewing Center/Office (CDRH/ODE, CDRH/OIVD, CBER/OBRR, CBER/OCTGT). If not provided in correct format, request the correct format during substantive review.*		X		
		Comments: See page 4 and Section 4				
	4.	Submission contains 510(k) Summary or 510(k) Statement *Either a) or b) must be answered "Yes" to be considered complete. Identify any missing element(s) in Comments.*		X		
		a.	Summary contains all elements per 21 CFR 807.92 *See also 510(k) Summary Checklist*	X		
		b.	Statement contains all elements per 21 CFR 807.93	X		
		Comments: : See sections 1-22 and specifically section 5				
	5.	Submission contains Truthful and Accuracy Statement per 21 CFR 807.87(k) *See recommended format. Select "Yes" if statement is present and includes the text in the recommended format, and is signed by a responsible person of the firm (not consultant).*		X		
		Comments: : See section 6 (page 8)				

Elements of a Complete Submission (RTA Items) **(21 CFR 807.87 unless otherwise indicated)** Submission should be designated RTA if not addressed						
Check "Yes" if item is present, "N/A" if it is not needed and "No" if it is not included but needed.						
	• Any "No" answer will result in a "Refuse to Accept" decision. • Each element on the checklist should be addressed within the submission. The submitter may provide a rationale for omission for any criteria that are deemed not applicable. If a rationale is provided, the criterion is considered present (Yes). An assessment of the rationale will be considered during the review of the submission.			**Yes**	**N/A**	**No**
	6.	Submission contains Class III Summary and Certification *See recommended content. Form should be signed by a responsible person of the firm, not a consultant. Select "N/A" only if submission is not a Class III 510(k).*			x	
		Comments: Section 7				
	7.	Submission contains clinical data *Select "N/A" if the submission does not contain clinical data. If "N/A" is selected, parts a and b below are omitted from the checklist.*			x	
		a.	Submission includes completed Financial Certification (FDA Form 3454) or Disclosure (FDA Form 3455) information for each covered clinical study included in the submission. *Select "N/A" if the submitted clinical data is not a "covered clinical study" as defined in the Guidance for Industry-Financial Disclosures by Clinical Investigators*		x	
		b.	Submission includes completed Certification of Compliance with requirements of ClinicalTrials.gov Data Bank (FDA Form 3674) (42 U.S.C. 282(j)(5)(B)) for each applicable device clinical trial included in the submission. *Select "N/A" if the submitted clinical data is not an "applicable device clinical trial" as defined in Title VIII of FDAAA, Sec. 801(j)*		x	
		Comments: N/A				
	8.	If submission references use of a national or international standard as part of demonstration of substantial equivalence, submission contains complete Standards Data Report for 510(k)s (FDA Form 3654) *There should be a completed form for each referenced national or international standard. (See Attachment* *Select "N/A" only if submission does not reference any standards.*			x	

Elements of a Complete Submission (RTA Items) **(21 CFR 807.87 unless otherwise indicated)** Submission should be designated RTA if not addressed					
Check "Yes" if item is present, "N/A" if it is not needed and "No" if it is not included but needed.					
• Any "No" answer will result in a "Refuse to Accept" decision. • Each element on the checklist should be addressed within the submission. The submitter may provide a rationale for omission for any criteria that are deemed not applicable. If a rationale is provided, the criterion is considered present (Yes). An assessment of the rationale will be considered during the review of the submission.				**Yes**	**N/A**	**No**
		Comments: Section 2, page 2; Section 8, page 11				
	9.	The submission identifies prior submissions for the same device for which FDA provided feedback related to the data or information needed to support substantial equivalence (e.g., submission numbers for Pre-Submission, IDE, prior not substantially equivalent (NSE) determination, prior 510(k) that was deleted or withdrawn) or states that there were no prior submissions for the subject device. *This information may be included in the Cover Letter (i.e., as a statement that there were no prior submissions for the device or a listing of the number(s) of the prior submissions). Alternatively, a list of submission numbers may be found in Section F (prior related submissions section) of the CDRH Coversheet form (Form 3514) to address this criterion. Please be advised that if this section of the form is left blank, it should not be considered a statement that there were no prior submissions.*			X No prior Submissions	No prior submission
		a.	If there were prior submissions, the submitter has identified where in the current submission any issues related to a determination of substantial equivalence outlined in prior communications are addressed. *To address this criterion, the submission may include a separate section with the prior submission number(s), a copy of the FDA feedback (e.g., letter, meeting minutes), and a statement of how or where in the submission this prior feedback was addressed. Note that the adequacy of how the feedback was addressed should be assessed during the substantive review.* For additional information regarding the Pre-Submission process, please refer to the Draft Guidance "Medical Devices: The Pre-Submission Program and Meetings with FDA Staff." (http://www.fda.gov/MedicalDevices/DeviceRegulationandGuidance/GuidanceDocuments/ucm310375.htm). Once finalized, this guidance will represent the		X	

Elements of a Complete Submission (RTA Items) (21 CFR 807.87 unless otherwise indicated) Submission should be designated RTA if not addressed						
Check "Yes" if item is present, "N/A" if it is not needed and "No" if it is not included but needed.						
	• Any "No" answer will result in a "Refuse to Accept" decision. • Each element on the checklist should be addressed within the submission. The submitter may provide a rationale for omission for any criteria that are deemed not applicable. If a rationale is provided, the criterion is considered present (Yes). An assessment of the rationale will be considered during the review of the submission.			**Yes**	**N/A**	**No**
			Agency's current thinking on this topic. *Select "N/A" if the submitter states there were no prior submissions in criterion above.*		x	
		Comments: N/A				
B.	**Device Description**					
	10.	a.	If there are requirements regarding the device description, such as special controls, in a device-specific regulation that are applicable to the device, the submission includes device description information to establish that the submitter has followed the device-specific requirement. *Select "N/A" if there are no applicable requirements in a device-specific regulation. Select "No" if the submission does not include a rationale for any omitted information. Note that the adequacy of how such requirements have been addressed should be assessed during the substantive review.*		x	
		b.	If there is a device-specific guidance, other than a special controls guidance document, applicable to the device, the submission includes device description information to establish that the submitter has addressed the recommendations or otherwise has met the applicable statutory or regulatory criteria through an alternative approach. *Select "N/A" if there is no applicable device-specific guidance. Select "No" if the submission does not include a rationale for any omitted information or any alternative approach as outlined above. Note that the adequacy of how recommendations in a device-specific guidance, etc., have been addressed should be assessed during the substantive review.*		x	
		Comments: Section 2, page 2; Section 8, page 11, Section 9				

Elements of a Complete Submission (RTA Items) (21 CFR 807.87 unless otherwise indicated) Submission should be designated RTA if not addressed						
Check "Yes" if item is present, "N/A" if it is not needed and "No" if it is not included but needed.						
	• Any "No" answer will result in a "Refuse to Accept" decision. • Each element on the checklist should be addressed within the submission. The submitter may provide a rationale for omission for any criteria that are deemed not applicable. If a rationale is provided, the criterion is considered present (Yes). An assessment of the rationale will be considered during the review of the submission.			**Yes**	**N/A**	**No**
	11.	Descriptive information is present and consistent within the submission (e.g., the device description section is consistent with the device description in the labeling), including:		X		
		a.	A description of the principle of operation and mechanism of action for achieving the intended effect.	X		☐
		b.	A description of proposed conditions of use, such as surgical technique for implants; anatomical location of use; user interface; how the device interacts with other devices; and/or how the device interacts with the patient.	X		☐
		c.	A list and description of each device for which clearance is requested. *Select "N/A" if there is only one device or model. "Device" may refer to models, part numbers, or various sizes, etc.*	X	☐	☐
		Comments: Appendix 13-1 (IFU); Section 10, 11				
	12.	Submission contains representative engineering drawing(s), schematics, illustrations and/or figures of the device that are clear, legible, labeled, and include dimensions. *In lieu of drawings, schematics, etc. of each device to be marketed, "representative" drawings, etc. may be provided, where "representative" is intended to mean that the drawings, etc. provided capture the differences in design, size, and other important characteristics of the various models, sizes, or versions of the device(s) to be marketed.* *Select "N/A" if the submitter provided a rationale for why the submission does not contain engineering drawings, schematics, etc. (e.g., device is a reagent and figures are not pertinent to describe the device).*		X	☐	☐
		Comments: Appendix 11-1; Section 11				

Elements of a Complete Submission (RTA Items) (21 CFR 807.87 unless otherwise indicated) Submission should be designated RTA if not addressed						
Check "Yes" if item is present, "N/A" if it is not needed and "No" if it is not included but needed.						
	• Any "No" answer will result in a "Refuse to Accept" decision. • Each element on the checklist should be addressed within the submission. The submitter may provide a rationale for omission for any criteria that are deemed not applicable. If a rationale is provided, the criterion is considered present (Yes). An assessment of the rationale will be considered during the review of the submission.			**Yes**	**N/A**	**No**
	13.	If device is intended to be marketed with multiple components, accessories, and/or as part of a system, *Select "N/A" if the device is not intended to be marketed with multiple components, accessories, and/or as part of a system.*			x	
		a.	Submission includes a list of all components and accessories to be marketed with the subject device.	☐ x		☐
		b.	Submission includes a description (as detailed in item 11.a. and b. and 12 above) of each component or accessory. *Select "N/A" if the component(s)/accessory(ies) has been previously cleared, or is exempt, and the proposed indications for use are consistent with the cleared indications.*	☐ x	☐	☐
		c.	A 510(k) number is provided for each component or accessory that received a prior 510(k) clearance. *Select "N/A" if the submission states that the component(s)/ accessory(ies) does not have a prior 510(k) clearance or the component(s)/accessory(ies) is 510(k) exempt.*	x		
		Comments: The device is a stand alone comprised of two parts in one sterile package; Section 11				
C.	**Substantial Equivalence Discussion**					
	14.	Submitter has identified a predicate(s) device		x		
		a.	Predicate's 510(k) number, trade name, and model number (if applicable) provided. For predicates that are preamendments devices, information is provided to document preamendments status. *Information regarding documenting preamendment status is available online (http://www.fda.gov/MedicalDevices/DeviceRegulationandGuidan*	x		

Elements of a Complete Submission (RTA Items) (21 CFR 807.87 unless otherwise indicated) Submission should be designated RTA if not addressed						
Check "Yes" if item is present, "N/A" if it is not needed and "No" if it is not included but needed.						
	• Any "No" answer will result in a "Refuse to Accept" decision. • Each element on the checklist should be addressed within the submission. The submitter may provide a rationale for omission for any criteria that are deemed not applicable. If a rationale is provided, the criterion is considered present (Yes). An assessment of the rationale will be considered during the review of the submission.			**Yes**	**N/A**	**No**
			ce/ComplianceActivities/ucm072746.htm).			
		b.	The identified predicate(s) is consistent throughout the submission (i.e., the predicate(s) identified in the Substantial Equivalence section is the same as that listed in the 510(k) Summary (if applicable) and that used in comparative performance testing.	x		
		Comments: Section 3, Section 5, Section 10				
	15.	Submission includes a comparison of the following for the predicate(s) and subject device				
		a.	Indications for use	x		
		b.	Technology, including features, materials, and principles of operation	x		
		Comments: Section 4, Section 5, Section 10, table 12-1				
	16.	Submission includes an analysis of why any differences between the subject device and predicate(s) do not render the device NSE (e.g., does not constitute a new intended use; and any differences in technological characteristics are accompanied by information that demonstrates the device is as safe and effective as the predicate and do not raise different questions of safety and effectiveness than the predicate), affect safety or effectiveness, or raise different questions of safety and effectiveness (see section 513(i)(1)(A) of the FD&C Act and 21 CFR 807.87(f)) *If there is no difference between the subject and predicate(s) with respect to indications for use or technology, this should be explicitly stated, in which case "N/A" should be selected. Select "No" only if the submission does not include an analysis of differences as described above or a statement that there are no differences. Note that the adequacy of the analysis should be assessed during the substantive review; only the presence of such an analysis is required for acceptance. In addition, note that due to potential differences in*			x		

Elements of a Complete Submission (RTA Items) **(21 CFR 807.87 unless otherwise indicated)** Submission should be designated RTA if not addressed					
Check "Yes" if item is present, "N/A" if it is not needed and "No" if it is not included but needed.					
	• Any "No" answer will result in a "Refuse to Accept" decision. • Each element on the checklist should be addressed within the submission. The submitter may provide a rationale for omission for any criteria that are deemed not applicable. If a rationale is provided, the criterion is considered present (Yes). An assessment of the rationale will be considered during the review of the submission.		**Yes**	**N/A**	**No**
		manufacturing that may not be known to the submitter, the fact that no differences are identified does not necessarily mean that no performance testing is needed.			
		Comments: Section 10, 12, 20, 21			
D.	**Proposed Labeling (see also 21 CFR part 801)** *If in vitro diagnostic (IVD) device, criteria 17, 18, and 19 may be omitted. These criteria will be omitted from the checklist if "N/A" is selected. IVD labeling is addressed in section 21 below.*				
	17.	Submission includes proposed package labels and labeling (e.g., instructions for use, package insert, operator's manual) that include a description of the device, its intended use, and the directions for use	X		
		a. Indications for use are stated in labeling and are identical to Indications for Use form and 510(k) Summary (if 510(k) Summary provided)	X		
		b. Submission includes directions for use that - include statements of all conditions, purposes or uses for which the device is intended (e.g., hazards, warnings, precautions, contraindications) (21 CFR 801.5) AND ~~Includes directions for layperson (see 21 CFR 801.5) OR submission states that device qualifies for exemption per 21 CFR 801 Subpart~~ D (NA for this submission)	X		
		Comments: Section 10, 13, Appendix 13-1			
	18.	If indicated for prescription use, labeling includes the prescription use statement (see 21 CFR 801.109(b)(1)) or "Rx only" symbol [See also Alternative to Certain Prescription Device Labeling Requirements] *Select "N/A" if not indicated for prescription use.*	X		

Elements of a Complete Submission (RTA Items) (21 CFR 807.87 unless otherwise indicated) Submission should be designated RTA if not addressed						
Check "Yes" if item is present, "N/A" if it is not needed and "No" if it is not included but needed.						
	• Any "No" answer will result in a "Refuse to Accept" decision. • Each element on the checklist should be addressed within the submission. The submitter may provide a rationale for omission for any criteria that are deemed not applicable. If a rationale is provided, the criterion is considered present (Yes). An assessment of the rationale will be considered during the review of the submission.			**Yes**	**N/A**	**No**
		Comments: Section 4; Appendix 13-1				
	19.	General labeling provisions				
		a.	Labeling includes name and place of business of the manufacturer, packer, or distributor (21 CFR 801.1)	X		
		b.	Labeling includes device common or usual name (21 CFR 801.61) *Select "N/A" if device is for prescription use only.*	X		
		Comments: See Appendix 13-1, 13-2; Section 13				
	20.	a.	If there are requirements regarding labeling, such as special controls, in a device-specific regulation that are applicable to the device, the submission includes labeling to establish that the submitter has followed the device-specific requirement. *Select "N/A" if there are no applicable requirements in a device-specific regulation. Select "No" if the submission does not include a rationale for any omitted information. Note that the adequacy of how such requirements have been addressed should be assessed during the substantive review.*		X	
		b.	If there is a device-specific guidance, other than a special controls guidance document, applicable to the device, the submission includes labeling to establish that the submitter has addressed the recommendations or otherwise has met the applicable statutory or regulatory criteria through an alternative approach. *Select "N/A" if there is no applicable device-specific guidance. Select "No" if the submission does not include a rationale for any omitted information or any alternative approach as outlined above. Note that the adequacy of how recommendations in a device-specific guidance have been addressed should be assessed during the substantive review.*		X	

Elements of a Complete Submission (RTA Items) **(21 CFR 807.87 unless otherwise indicated)** Submission should be designated RTA if not addressed					
Check "Yes" if item is present, "N/A" if it is not needed and "No" if it is not included but needed.					
	• Any "No" answer will result in a "Refuse to Accept" decision. • Each element on the checklist should be addressed within the submission. The submitter may provide a rationale for omission for any criteria that are deemed not applicable. If a rationale is provided, the criterion is considered present (Yes). An assessment of the rationale will be considered during the review of the submission.			**Yes**	**N/A**	**No**
		c.	If there is a special controls document applicable to the device, the submission includes labeling to establish that the submitter has complied with the particular mitigation measures set forth in the special controls document or uses alternative mitigation measures but provides a rationale to demonstrate that those alternative measures identified by the firm will provide at least an equivalent assurance of safety and effectiveness. *Select "N/A" if there is no applicable special controls document. Select "No" if the submission does not include a rationale for any omitted information or any alternative approach as outlined above. Note that the adequacy of how mitigation measures in a special controls document have been addressed should be assessed during the substantive review.*	☐	X	☐
		Comments: N/A				
	21.	If the device is an in vitro diagnostic device, provided labeling includes all applicable information required per 21 CFR 809.10. *Select "N/A" if not an in vitro diagnostic device.*		☐	X	☐
E.	**Sterilization** *If in vitro diagnostic (IVD) device and sterilization is not applicable, select "N/A." The criteria in this section will be omitted from the checklist if "N/A" is selected.*				☐	
	Submission states that the device and/or accessories are: (*one of the below must be checked*) ☐X provided sterile (Yes) ☐provided non-sterile but sterilized by the end user non- ☐sterile when used This information will determine whether and what type of additional information may be necessary for a substantial equivalence determination. *If "non-sterile when used" is selected, the sterility-related criteria below are omitted from*					☐

Elements of a Complete Submission (RTA Items) **(21 CFR 807.87 unless otherwise indicated)** Submission should be designated RTA if not addressed						
Check "Yes" if item is present, "N/A" if it is not needed and "No" if it is not included but needed.						
	• Any "No" answer will result in a "Refuse to Accept" decision. • Each element on the checklist should be addressed within the submission. The submitter may provide a rationale for omission for any criteria that are deemed not applicable. If a rationale is provided, the criterion is considered present (Yes). An assessment of the rationale will be considered during the review of the submission.			**Yes**	**N/A**	**No**
	the checklist. *If information regarding the sterility status of the device is not provided, select "No."*					
	Comments: The product is a single patient use and provided sterile; Appendix 14-1; Section 14					
	22.	Assessment of the need for sterilization information				
		a.	Identification of device, and/or accessories, and/or components that are provided sterile.	X	☐	☐
		b.	Identification of device, and/or accessories, and/or components that are end user sterilized	☐	X	☐
		c.	Identification of device, and/or accessories, and/or components that are reusable and cleaning/disinfection instructions are provided.		X	
		Comments: The product is a single patient use and provided sterile; Appendix 14-1; Section 14				
	23.	If the device, and/or accessory, and/or a component is provided sterile: *Select "N/A" if no part of the device, accessories, or components is provided sterile, otherwise complete a-e below.*				
		a.	Sterilization method is stated for each component (including parameters such as dry time for steam sterilization, radiation dose, etc.)		X	
		b.	A description of method to validate the sterilization parameters (e.g., half-cycle method and full citation of FDA-recognized standard, including date) is provided for each proposed sterilization method. *Note, the sterilization validation report is not required.*	X		
		c.	For devices sterilized using chemical sterilants such as ethylene oxide (EO) and hydrogen peroxide, submission states maximum	X		

Elements of a Complete Submission (RTA Items)
(21 CFR 807.87 unless otherwise indicated)

Submission should be designated RTA if not addressed

Check "Yes" if item is present, "N/A" if it is not needed and "No" if it is not included but needed.

			• Any "No" answer will result in a "Refuse to Accept" decision. • Each element on the checklist should be addressed within the submission. The submitter may provide a rationale for omission for any criteria that are deemed not applicable. If a rationale is provided, the criterion is considered present (Yes). An assessment of the rationale will be considered during the review of the submission.	**Yes**	**N/A**	**No**
			levels of sterilant residuals remaining on the device and sterilant residual limits. *Select "N/A" if not sterilized using chemical sterilants.*			
		d.	Submission includes description of packaging and packaging contents (e.g., if multiple devices are included within the same package, Tyvek packaging, etc.)	X		☐
		e.	Sterility Assurance Level (SAL) stated	X		☐
		Comments: Section 14				
	24.	If the device, and/or accessory, and/or a component is end user sterilized: *Select "N/A" if no part of the device, accessories, or components are end user sterilized, otherwise complete a-d below.*			X	
		a.	Sterilization method is stated for each component (including parameters such as dry time for steam sterilization, radiation dose, etc.)	☐		☐
		b.	A description of method to validate the sterilization parameters (e.g., half-cycle method and full citation of FDA-recognized standard, including date) is provided for each proposed sterilization method. *Note, the sterilization validation is not required.*	☐		☐
		c.	Submission includes description of packaging and packaging contents (e.g., if multiple devices are included within the same package, Tyvek packaging, etc.)	☐		☐
		d.	Submission includes sterilization instructions for end user			
		Comments: N/A				
	25.	a.	If there are requirements regarding sterility, such as special	☐	X	☐

Elements of a Complete Submission (RTA Items) **(21 CFR 807.87 unless otherwise indicated)** Submission should be designated RTA if not addressed						
Check "Yes" if item is present, "N/A" if it is not needed and "No" if it is not included but needed.						
• Any "No" answer will result in a "Refuse to Accept" decision. • Each element on the checklist should be addressed within the submission. The submitter may provide a rationale for omission for any criteria that are deemed not applicable. If a rationale is provided, the criterion is considered present (Yes). An assessment of the rationale will be considered during the review of the submission.				**Yes**	**N/A**	**No**
			controls, in a device-specific regulation that are applicable to the device, the submission includes sterility information to establish that the submitter has followed the device-specific requirement. *Select "N/A" if there are no applicable requirements in a device-specific regulation. Select "No" if the submission does not include a rationale for any omitted information. Note that the adequacy of how such requirements have been addressed should be assessed during the substantive review.*			
		b.	If there is a device-specific guidance, other than a special controls guidance document, applicable to the device, the submission includes sterility information to establish that the submitter has addressed the recommendations or otherwise has met the applicable statutory or regulatory criteria through an alternative approach. *Select "N/A" if there is no applicable device-specific guidance. Select "No" if the submission does not include a rationale for any omitted information or any alternative approach as outlined above. Note that the adequacy of how recommendations in a device-specific guidance have been addressed should be assessed during the substantive review.*	☐	☐	☐
		c.	If there is a special controls document applicable to the device, the submission includes sterility information to establish that the submitter has complied with the particular mitigation measures set forth in the special controls document or uses alternative mitigation measures but provides a rationale to demonstrate that those alternative measures identified by the firm will provide at least an equivalent assurance of safety and effectiveness. *Select "N/A" if there is no applicable special controls document. Select "No" if the submission does not include a rationale for any omitted information or any alternative approach as outlined above. Note that the adequacy of how mitigation measures in a*			

Elements of a Complete Submission (RTA Items) (21 CFR 807.87 unless otherwise indicated) Submission should be designated RTA if not addressed					
Check "Yes" if item is present, "N/A" if it is not needed and "No" if it is not included but needed.					
	• Any "No" answer will result in a "Refuse to Accept" decision. • Each element on the checklist should be addressed within the submission. The submitter may provide a rationale for omission for any criteria that are deemed not applicable. If a rationale is provided, the criterion is considered present (Yes). An assessment of the rationale will be considered during the review of the submission.		**Yes**	**N/A**	**No**
		special controls document have been addressed should be assessed during the substantive review.			
		Comments: There are no Special controls; Section 14, and appendix 14-1			
F.	**Shelf Life**				
	26.	Proposed shelf life/ expiration date stated *Select "N/A" if the device is not provided sterile and the submitter states that storage conditions could not affect device safety or effectiveness.*	X		
		Comments: See pages 36 & Appendix 14-1 (Real Time Shelf Life Testing)			
	27.	For sterile device, submission includes summary of methods used to establish that device sterility will remain substantially equivalent to that of the predicate through the proposed shelf life, or a rationale for why testing to establish shelf life is not applicable. *Select "N/A" if the device is not provided sterile.*	X		
		Comments:			
	28.	Submission includes summary of methods used to establish that device performance is not adversely affected by aging and therefore device performance will remain substantially equivalent to that of the predicate, or includes a rationale for why the storage conditions are not expected to affect device safety or effectiveness.	X		
		Comments: Section 14, and appendix 14-1			
G.	**Biocompatibility** *If in vitro diagnostic (IVD) device, select "N/A." The criteria in this section will be omitted from the checklist if "N/A" is selected.*		X		
	Submission states that there: (*one of the below must be checked*) X are				

Elements of a Complete Submission (RTA Items) **(21 CFR 807.87 unless otherwise indicated)** Submission should be designated RTA if not addressed					
Check "Yes" if item is present, "N/A" if it is not needed and "No" if it is not included but needed.					
	• Any "No" answer will result in a "Refuse to Accept" decision. • Each element on the checklist should be addressed within the submission. The submitter may provide a rationale for omission for any criteria that are deemed not applicable. If a rationale is provided, the criterion is considered present (Yes). An assessment of the rationale will be considered during the review of the submission.		**Yes**	**N/A**	**No**
	are not direct or indirect (e.g., through fluid infusion) patient-contacting components. This information will determine whether and what type of additional information may be necessary for a substantial equivalence determination. *If "are not" is selected, the biocompatibility-related criteria below are omitted from the checklist. If information regarding whether the device is patient-contacting is not provided, select "No."*				
	Comments: Section 15				
	29.	Submission includes list of patient-contacting device components and associated materials of construction, including identification of color additives, if present	X		
		Comments: Section 15			
	30.	Submission identifies contact classification (e.g., surface-contacting, less than 24 hour duration)	X		
		Comments: Section 15			
	31.	Biocompatibility assessment of patient-contacting components Submission includes: Test protocol (including identification and description of test article), methods, pass/fail criteria, and results provided for each completed test, OR a statement that biocompatibility testing is not needed with a rationale (e.g., materials and manufacturing/processing are identical to the predicate).	X		
		Comments: Section 15			
H.	**Software**				

Elements of a Complete Submission (RTA Items) **(21 CFR 807.87 unless otherwise indicated)** Submission should be designated RTA if not addressed					
Check "Yes" if item is present, "N/A" if it is not needed and "No" if it is not included but needed.					
	• Any "No" answer will result in a "Refuse to Accept" decision. • Each element on the checklist should be addressed within the submission. The submitter may provide a rationale for omission for any criteria that are deemed not applicable. If a rationale is provided, the criterion is considered present (Yes). An assessment of the rationale will be considered during the review of the submission.		**Yes**	**N/A**	**No**
	Submission states that the device: (*one of the below must be checked*) does x does not contain software/firmware. This information will determine whether and what type of additional information may be necessary for a substantial equivalence determination. *If "does not" is selected, the software-related criterion is omitted from the checklist. If information regarding whether the device contains software is not provided, select "No."*				x
	Comments: N/A				
	32.	Submission includes a statement of software level of concern and rationale for the software level of concern			
		Comments:			
	33.	All applicable software documentation provided based on level of concern identified by the submitter, as described in Guidance for the Content of Premarket Submissions for Software Contained in Medical Devices, or the submission includes information to establish that the submitter has otherwise met the applicable statutory or regulatory criteria through an alternative approach (i.e., the submitter has identified an alternate approach with a rationale).			
		Comments: Section 16 (N/A)			
I.	**EMC and Electrical Safety**			N/A	
	Submission states that the device: (*one of the below must be checked*) does does not require EMC and Electrical Safety evaluation.				

Elements of a Complete Submission (RTA Items) (21 CFR 807.87 unless otherwise indicated) Submission should be designated RTA if not addressed					
Check "Yes" if item is present, "N/A" if it is not needed and "No" if it is not included but needed.					
	• Any "No" answer will result in a "Refuse to Accept" decision. • Each element on the checklist should be addressed within the submission. The submitter may provide a rationale for omission for any criteria that are deemed not applicable. If a rationale is provided, the criterion is considered present (Yes). An assessment of the rationale will be considered during the review of the submission.		**Yes**	**N/A**	**No**
	This information will determine whether and what type of additional information may be necessary for a substantial equivalence determination. *If "does not" is selected, the EMC-related and Electrical Safety-related criteria below are omitted from the checklist. If information regarding whether the device requires EMC and Electrical Safety evaluation is not provided, select "No."*				
	Comments: N/A; also see section 17				
	34.	Submission includes evaluation of electrical safety (e.g., per IEC 60601-1, or equivalent FDA-recognized standard, and if applicable, the device-specific standard), OR submission includes electrical safety evaluation using methods or standards that are not FDA-recognized and submission includes information to establish that the submitter has otherwise met the applicable statutory or regulatory criteria through this alternative approach (i.e., the submitter has identified alternate methods or standards with a rationale).	☐	X	☐
		Comments: N/A; also see section 17			
	35.	Submission includes evaluation of electromagnetic compatibility (e.g., per IEC 60601-1-2 or equivalent FDA-recognized standard and if applicable, the device-specific standard) OR submission includes electromagnetic compatibility evaluation using methods or standards that are not FDA-recognized and submission includes information to establish that the submitter has otherwise met the applicable statutory or regulatory criteria through this alternative approach (i.e., the submitter has identified alternate methods or standards with a rationale).	☐	X	☐
		Comments: N/A; also see section 17			

Elements of a Complete Submission (RTA Items) **(21 CFR 807.87 unless otherwise indicated)** Submission should be designated RTA if not addressed						
Check "Yes" if item is present, "N/A" if it is not needed and "No" if it is not included but needed.						
	• Any "No" answer will result in a "Refuse to Accept" decision. • Each element on the checklist should be addressed within the submission. The submitter may provide a rationale for omission for any criteria that are deemed not applicable. If a rationale is provided, the criterion is considered present (Yes). An assessment of the rationale will be considered during the review of the submission.			**Yes**	**N/A**	**No**
J.	**Performance Data – General** *If in vitro diagnostic (IVD) device, select "N/A." The criteria in this section will be omitted from the checklist if "N/A" is selected. Performance data criteria relating to IVD devices will be addressed in Section K.*			X	☐	
	Comments: Section 18					
	36.	Full test report is provided for each completed test. A full test report includes: objective of the test, description of the test methods and procedures, study endpoint(s), pre- defined pass/fail criteria, results summary, conclusions, and an explanation of how the data generated from the test supports a finding of substantial equivalence. *Full test reports provided for all completed tests/evaluations (e.g., bench evaluations, comparative performance tests, etc.). Select "N/A" if the submission does not include performance data.*		X	☐	☐
		Comments: Section 18				
	37.	a.	If there are requirements regarding performance data, such as special controls, in a device-specific regulation that are applicable to the device, the submission includes performance data to establish that the submitter has followed the device-specific requirement. *Select "N/A" if there are no applicable requirements in a device-specific regulation. Select "No" if the submission does not include a rationale for any omitted information. Note that the adequacy of how such requirements have been addressed should be assessed during the substantive review.*	☐	X	☐
		b.	If there is a device-specific guidance, other than a special controls guidance document, applicable to the device, the submission includes performance data to establish that the submitter has addressed the recommendations or otherwise has met the applicable statutory or regulatory criteria through an alternative	☐	X	☐

Elements of a Complete Submission (RTA Items) (21 CFR 807.87 unless otherwise indicated) Submission should be designated RTA if not addressed						
Check "Yes" if item is present, "N/A" if it is not needed and "No" if it is not included but needed.						
	• Any "No" answer will result in a "Refuse to Accept" decision. • Each element on the checklist should be addressed within the submission. The submitter may provide a rationale for omission for any criteria that are deemed not applicable. If a rationale is provided, the criterion is considered present (Yes). An assessment of the rationale will be considered during the review of the submission.			**Yes**	**N/A**	**No**
			approach. *Select "N/A" if there is no applicable device-specific guidance. Select "No" if the submission does not include a rationale for any omitted information or any alternative approach as outlined above. Note that the adequacy of how recommendations in a device-specific guidance have been addressed should be assessed during the substantive review.*			
		c.	If there is a special controls document applicable to the device, the submission includes performance data to establish that the submitter has complied with the particular mitigation measures set forth in the special controls document or uses alternative mitigation measures but provides a rationale to demonstrate that those alternative measures identified by the firm will provide at least an equivalent assurance of safety and effectiveness. *Select "N/A" if there is no applicable special controls document. Select "No" if the submission does not include a rationale for any omitted information or any alternative approach as outlined above. Note that the adequacy of how mitigation measures in a special controls document have been addressed should be assessed during the substantive review.*	☐	X	☐
		Comments: N/A				
	38.	If literature is referenced in the submission, submission includes: *Select "N/A" if the submission does not reference literature. Note that the applicability of the referenced article to support a substantial equivalence finding should be assessed during the substantive review; only the presence of a discussion is required to support acceptance.*		X		
		a.	Legible reprints or a summary of each article	☐	X	☐
		b.	Discussion of how each article is applicable to support the	☐	X	☐

Elements of a Complete Submission (RTA Items) (21 CFR 807.87 unless otherwise indicated) Submission should be designated RTA if not addressed						
Check "Yes" if item is present, "N/A" if it is not needed and "No" if it is not included but needed.						
	• Any "No" answer will result in a "Refuse to Accept" decision. • Each element on the checklist should be addressed within the submission. The submitter may provide a rationale for omission for any criteria that are deemed not applicable. If a rationale is provided, the criterion is considered present (Yes). An assessment of the rationale will be considered during the review of the submission.			**Yes**	**N/A**	**No**
			substantial equivalence of the subject device to the predicate.		X	
		Comments: Appendix 20-1				
	39.	For each completed nonclinical (i.e., animal) study conducted, *Select "N/A" if no animal study was conducted. Note that this section does not address biocompatibility evaluations, which are assessed in Section G of the checklist,*			X	
		a.	Submission includes a study protocol which includes all elements as outlined in 21 CFR 58.120	☐		☐
		b.	Submission includes final study report which includes all elements outlined in 21 CFR 58.185	☐		☐
		c.	Submission contains a statement that the study was conducted in compliance with applicable requirements in the GLP regulation (21 CFR Part 58), or, if the study was not conducted in compliance with the GLP regulation, the submission explains why the noncompliance would not impact the validity of the study data provided to support a substantial equivalence determination.	☐		☐
		Comments: N/A The product has not changed from predicate				
K.	**Performance Characteristics – In Vitro Diagnostic Devices Only (see also 21 CFR 809.10(b)(12))**				X	
	Submission indicates that device: (*one of the below must be checked*) ☐is ☐Xis not (Is not) an in vitro diagnostic device (IVD). *If "is not" is selected, the performance data-related criteria below are omitted from the checklist.*					
	Comments:					

Elements of a Complete Submission (RTA Items) (21 CFR 807.87 unless otherwise indicated) Submission should be designated RTA if not addressed						
Check "Yes" if item is present, "N/A" if it is not needed and "No" if it is not included but needed.						
	• Any "No" answer will result in a "Refuse to Accept" decision. • Each element on the checklist should be addressed within the submission. The submitter may provide a rationale for omission for any criteria that are deemed not applicable. If a rationale is provided, the criterion is considered present (Yes). An assessment of the rationale will be considered during the review of the submission.			**Yes**	**N/A**	**No**
	40.	Submission includes the following studies, as appropriate for the device type, including associated protocol descriptions, study results and line data:				
		a.	Precision/reproducibility	☐	☐	☐
		b.	Accuracy (includes as appropriate linearity; calibrator or assay traceability; calibrator and/or assay stability protocol and acceptance criteria; assay cut-off; method comparison or comparison to clinical outcome; matrix comparison; and clinical reference range or cutoff.	☐	☐	☐
		c.	Sensitivity (detection limits, LoB, LoD, LoQ where relevant for the device type).	☐	☐	☐
		d.	Analytical specificity	☐	☐	☐
		Comments: N/A				
	41.	a.	If there are requirements regarding performance data, such as special controls, in a device-specific regulation that are applicable to the device, the submission includes performance data to establish that the submitter has followed the device-specific requirement. *Select "N/A" if there are no applicable requirements in a device-specific regulation. Select "No" if the submission does not include a rationale for any omitted information. Note that the adequacy of how such requirements have been addressed should be assessed during the substantive review.*	☐	☐ x	☐
		b.	If there is a device-specific guidance, other than a special controls guidance document, applicable to the device, the submission includes performance data to establish that the submitter has addressed the recommendations or otherwise has met the	☐	☐ x	☐

Elements of a Complete Submission (RTA Items) **(21 CFR 807.87 unless otherwise indicated)** Submission should be designated RTA if not addressed						
Check "Yes" if item is present, "N/A" if it is not needed and "No" if it is not included but needed.						
		• Any "No" answer will result in a "Refuse to Accept" decision. • Each element on the checklist should be addressed within the submission. The submitter may provide a rationale for omission for any criteria that are deemed not applicable. If a rationale is provided, the criterion is considered present (Yes). An assessment of the rationale will be considered during the review of the submission.	**Yes**	**N/A**	**No**
		applicable statutory or regulatory criteria through an alternative approach. *Select "N/A" if there is no applicable device-specific guidance. Select "No" if the submission does not include a rationale for any omitted information or any alternative approach as outlined above. Note that the adequacy of how recommendations in a device-specific guidance have been addressed should be assessed during the substantive review.*		X	
	c.	If there is a special controls document applicable to the device, the submission includes performance data to establish that the submitter has complied with the particular mitigation measures set forth in the special controls document or uses alternative mitigation measures but provides a rationale to demonstrate that those alternative measures identified by the firm will provide at least an equivalent assurance of safety and effectiveness. *Select "N/A" if there is no applicable special controls document. Select "No" if the submission does not include a rationale for any omitted information or any alternative approach as outlined above. Note that the adequacy of how mitigation measures in a special controls document have been addressed should be assessed during the substantive review.*		X	
	Comments:				

Decision: Accept ____ Refuse to Accept ____

If Accept, notify applicant; if Refuse to Accept, notify applicant in writing and include a copy of this checklist.

Reviewer Signature: _____ Date:

Form Approved: OMB No. 0910-0511 Expiration Date: April 30, 2016. See Instructions for OMB Statement.

DEPARTMENT OF HEALTH AND HUMAN SERVICES FOOD AND DRUG ADMINISTRATION **MEDICAL DEVICE USER FEE COVER SHEET**	PAYMENT IDENTIFICATION NUMBER: (b)(4) Trade Secret Process Write the Payment Identification number on your check.

A completed cover sheet must accompany each original application or supplement subject to fees. If payment is sent by U.S. mail or courier, please include a copy of this completed form with payment. Payment and mailing instructions can be found at: http://www.fda.gov/oc/mdufma/coversheet.html

1. COMPANY NAME AND ADDRESS (include name, street address, city state, country, and post office code)	2. CONTACT NAME Dov Gal 2.1 E-MAIL ADDRESS dov@clearcatheter.com 2.2 TELEPHONE NUMBER (include Area code) 714-9165010 2.3 FACSIMILE (FAX) NUMBER (Include Area code)
CLEAR CATHETER SYSTEMS 1630 South Sunkist St Suite E Anaheim CA 92608 US 1.1 EMPLOYER IDENTIFICATION NUMBER (EIN) (b)(4) Trade Secret	

3. TYPE OF PREMARKET APPLICATION (Select one of the following in each column; if you are unsure, please refer to the application descriptions at the following web site: http://www.fda.gov/MedicalDevices/DeviceRegulationandGuidance/GuidanceDocuments/ucm345263.htm

Select an application type:	3.1 Select a center
[X] Premarket notification(510(k)); except for third party	[X] CDRH
[ ] 513(g) Request for Information	[ ] CBER
[ ] Biologics License Application (BLA)	3.2 Select one of the types below
[ ] Premarket Approval Application (PMA)	[X] Original Application
[ ] Modular PMA	Supplement Types:
[ ] Product Development Protocol (PDP)	[ ] Efficacy (BLA)
[ ] Premarket Report (PMR)	[ ] Panel Track (PMA, PMR, PDP)
[ ] 30-Day Notice	[ ] Real-Time (PMA, PMR, PDP)
	[ ] 180-day (PMA, PMR, PDP)

4. ARE YOU A SMALL BUSINESS? (See the instructions for more information on determining this status)

[ ] YES, I meet the small business criteria and have submitted the required qualifying documents to FDA

[X] NO, I am not a small business

4.1 If Yes, please enter your Small Business Decision Number:

5. FDA WILL NOT ACCEPT YOUR SUBMISSION IF YOUR COMPANY HAS NOT PAID AN ESTABLISHMENT REGISTRATION FEE THAT IS DUE TO FDA. HAS YOUR COMPANY PAID ALL ESTABLISHMENT REGISTRATION FEES THAT ARE DUE TO FDA?

[X] YES (All of our establishments have registered and paid the fee, or this is our first device, and we will register and pay the fee within 30 days of FDA's approval/clearance of this device.)

[ ] NO (If "NO," FDA will not accept your submission until you have paid all fees due to FDA. This submission will not be processed; see http://www.fda.gov/cdrh/mdufma for additional information)

6. IS THIS PREMARKET APPLICATION COVERED BY ANY OF THE FOLLOWING USER FEE

6. IS THIS PREMARKET APPLICATION COVERED BY ANY OF THE FOLLOWING USER FEE EXCEPTIONS? IF SO, CHECK THE APPLICABLE EXCEPTION.

[ ] This application is the first PMA submitted by a qualified small business, including any affiliates

[ ] The sole purpose of the application is to support conditions of use for a pediatric population

[ ] This biologics application is submitted under section 351 of the Public Health Service Act for a product licensed for further manufacturing use only

[ ] The application is submitted by a state or federal government entity for a device that is not to be distributed commercially

7. IS THIS A SUPPLEMENT TO A PREMARKET APPLICATION FOR WHICH FEES WERE WAIVED DUE TO SOLE USE IN A PEDIATRIC POPULATION THAT NOW PROPOSES CONDITION OF USE FOR ANY ADULT POPULATION? (If so, the application is subject to the fee that applies for an original premarket approval application (PMA).

[ ] YES [X] NO

PAPERWORK REDUCTION ACT STATEMENT

Public reporting burden for this collection of information is estimated to average 18 minutes per response, including the time for reviewing instructions, searching existing data sources, gathering and maintaining the data needed, and completing and reviewing the collection of information. Send comments regarding this burden estimate or any other aspect of this collection of information, including suggestions for reducing this burden, to the address below.

Department of Health and Human Services, Food and Drug Administration, Office of Chief Information Officer, 8455 Colesville Road, COLE-14-14253 Silver Spring, MD 20993-0002
[Please do NOT return this form to the above address, except as it pertains to comments on the burden estimate.]

8. USER FEE PAYMENT AMOUNT SUBMITTED FOR THIS PREMARKET APPLICATION

(b)(4) Trade Secret Process [redacted] 17-Dec-2014

Form FDA 3601 (01/2007)

"Close Window" Print Cover sheet

Please wait...

If this message is not eventually replaced by the proper contents of the document, your PDF viewer may not be able to display this type of document.

You can upgrade to the latest version of Adobe Reader for Windows®, Mac, or Linux® by visiting http://www.adobe.com/go/reader_download.

For more assistance with Adobe Reader visit http://www.adobe.com/go/acrreader.

Windows is either a registered trademark or a trademark of Microsoft Corporation in the United States and/or other countries. Mac is a trademark of Apple Inc., registered in the United States and other countries. Linux is the registered trademark of Linus Torvalds in the U.S. and other countries.

January 7, 2015

U.S. Food and Drug Administration
Center for Devices and Radiological Heath
Document Mail Center – WO66-G609
10903 New Hampshire Avenue
Silver Spring, MD 20993-0002

Re: Traditional 510(k) Premarket Notification PleuraFlow® System similar to predicate, K093565 by ClearFlow Inc. (AKA Clear Catheter Systems Inc.)

In accordance with Section 510(k) of the Federal Food, Drug and Cosmetic Act, as amended, and in conformance with Title 21 of the Code of Federal Regulations Part 807 (21 CFR §807), Subpart B, this 510(k) Premarket Notification is being submitted prior to the date when ClearFlow proposes to introduce into interstate commerce, for commercial distribution, the ClearFlow PleuraFlow® System. No applicable mandatory performance standards or special controls exist for this device.

Per the instructions accessed at http://www.fda.gov/cdrh/elecsub.html, an electronic copy is being provided with this submission and it is an exact duplicate of the original paper submission.

This submission contains methods, data, and analysis of these data, which the Sponsor considers "Trade Secret", commercially privileged and confidential. In accordance with 21 CFR §20.61, this information may not be disclosed to the public in accordance with Freedom of Information (FOI) Act. This submission follows the format suggested in FDA's *Guidance for Industry and FDA Staff: Format for Traditional and Abbreviated 510(k)s*, dated August 12, 2005 and updated on November 17, 2005. In accordance with the referenced guidance, the following details are being provided in this cover letter:

- Submission Type: Traditional 510(k)
- Trade Name: PleuraFlow® System
- Recommended classification regulation: 21 CFR 878.4780; Powered suction pump.
- Common name: Introduction/drainage; wound drain catheter system

- Class: II
- Panel: General & Plastic Surgery
- Product Codes: Primary—OTK; Subsequent—GBX
- Basis for submission: PleuraFlow®System is the same as previously cleared under 510(k) #(K093565). The basis for submission is to amend the Indication for Use based on data obtained from current product's users during post market evaluation.

Design and Use of the Device

Question	Yes	No
Is the device intended for prescription use (21 CFR 801 Subpart D)? A	X	
Is the device intended for over-the-counter use (21 CFR 807 Subpart C)?		X
Does the device contain components derived from a tissue or other biologic source?		X
Is the device provided sterile?	X	
Is the device intended for single use?	X	
Is the device a reprocessed single use device?		X
If yes, does this device type require reprocessed validation data?		N/A
Does the device contain a drug?		X
Does the device contain a biologic?		X
Does the device use software?		X
Does the submission include clinical information? **It includes Post market study**		N/A

The official contact person for this submission is the undersigned.

Sincerely,

Dov Gal

Dov Gal, DVM, MBA
ClearFlow, Inc.
1630 S. Sunkist t. Suite E
Anaheim CA 92806
Ph: 714.916.5014
Fax: 714.916.5019
Email: dgal@clearflow.com

Official Correspondent for ClearFlow, Inc.

Indications for Use Statement

510(k) Number:

Device Name: PleuraFlow® System

Indications for Use: The PleuraFlow® system is indicated for use during open surgical procedures and trauma in order to prevent or minimize chest tube occlusion and subsequent retained blood and fluid accumulation within the operative site after closure of the surgical wound. The device is indicated for use in cardiothoracic surgical procedures. The product is indicated for adult and pediatric patients under clinical settings.

Prescription Use ___X____ AND/OR Over-The-Counter Use _____

(Part 21 CFR 801 Subpart D) (21 CFR 807 Subpart C)

(PLEASE DO NOT WRITE BELOW THIS LINE-CONTINUE ON ANOTHER PAGE IF NEEDED)

Concurrence of CDRH, Office of Device Evaluation (ODE)

510(k) Summary

The following information is provided as required by 21 CFR § 807.87 for **PleuraFlow® System** 510(k) premarket notification. In response to the Safe Medical Devices Act of 1990, the following is a summary of the safety and effectiveness information upon which the substantial equivalence determination is based.

Date of Submission: January 7, 2015

Applicant:
Clear Flow, Inc.
1630 S. Sunkist St., Suite E
Anaheim CA
92806

Primary Contact Person:
Dov Gal, DVM
ClearFlow, Inc.
1630 S. Sunkist St., Suite E
Anaheim
CA 92806
Phone: 714-916-5014
Fax: 714-916-5019
Email: dgal@clearlflow.com

CEO/ President:
Paul Molloy
ClearFlow, Inc.
1630 S. Sunkist St., Suite E
Anaheim
CA 92806
Phone: 714-905-5271
Fax: 714-916-5019
Email: pmolloy@clearlflow.com

Device Proprietary Name: PleuraFlow® System

Device Common Name: Introduction/drainage; wound drain catheter system.

Regulatory Class and Name: Class II, Powered Suction Pump

Product Codes: OTK and GBX

Indication For Use: The PleuraFlow System is indicated for use during open surgical procedures and trauma in order to prevent or minimize chest tube occlusion and subsequent retained blood and fluid accumulation within the operative site after closure of the surgical wound. The device is indicated for use in cardiothoracic surgical procedures. The product is indicated for adult and pediatric patients under clinical settings.

Predicate Device: Predicate device is the PleuraFlow Catheter System (K093565) by ClearFlow, Inc., AKA Clear Systems, Inc.

Device Description: The PleuraFlow System is comprised of a silicone Chest Tube and a Clearance Apparatus. The PleuraFlow Chest Tube is available in four (4) standard sizes (20FR, 24FR, 28FR and 32FR). Each Chest Tube has a Cut Length of 19 inches (48.3 cm) with graduated measurements in centimeters from the distal eyelet. Each Chest Tube has a barium stripe to facilitate visualization. The Chest Tube is connected to a Clearance Apparatus, which is connected to the tubing from the drainage canister. The Clearance Apparatus consists of a Guide Tube and a PTFE-coated Clearance Wire with a Loop set on its distal end, bent at a 105-degree angle. The Clearance Apparatus is advanced into the PleuraFlow Chest Tube using a magnetic Shuttle. When indicated, the Clearance Wire and Loop is advanced and retracted within the PleuraFlow Chest Tube to proactively prevent or break up and clear any tube obstructions or clogging to keep the tube patent.

Indications for Use: The PleuraFlow System is indicated for use during open surgical procedures and trauma in order to prevent or minimize chest tube occlusion and subsequent retained blood and fluid accumulation within the operative site after closure of the surgical wound. The device is indicated for use in cardiothoracic surgical procedures. The product is indicated for adult and pediatric patients under clinical settings.

Performance Data: The safety and effectiveness of the PleuraFlow System has been previously demonstrated through design validation and verification that were cleared under 510(k) (K093565). Performance has been further demonstrated through post-market data.

Use of the device over the last four (4) years has shown that the product has significantly reduced the complications for patients who have received treatment with PleuraFlow versus other products during and after surgery.

Studies have linked both chest tube clogging and retained pericardial blood with POAF.[2, 10] There is a substantial body of literature illustrating that shunting blood through pericardial windows to divert the blood to the pleural spaces can reduce POAF.[10,] demonstrates by adhering to a protocol developed to maximize chest tube patency, POAF can be reduced. Consistent with prior studies, this link appears to be related to reducing RBS. A manuscript titled "Reduction in Interventions for Post Operative Effusions and Atrial Fibrillation with Active Clearance of Chest Drainage Catheters" was submitted to the Journal of Thoracic and Cardiovascular Surgery. Authors are Sirch J.1, Ledwon M.1, Püski T.1, Grossmann I.1, Boyle EM.2, Pfeiffer S.1,Fischlein T.1 From the following institutions:

1. Cardiac Surgery, Heart Center, Paracelsus Medical University, Nurenberg, Germany,
2. St. Charles Medical Center, Bend, Oregon, United States.

Conclusion: The evaluation of the PleuraFlow System does not raise any additional concerns regarding safety and effectiveness and may therefore be considered substantially equivalent to the predicate device.

Section 6: Truthful and Accurate Statement

Premarket Notification

Truthful and Accurate Statement

[as required by 21 CFR § 807.87k)]

I certify, in my capacity as Chief Executive Officer of ClearFlow, Inc., I believe to the best of my knowledge, that all data and information submitted in the premarket notification are truthful and accurate and that no material fact has been omitted.

1/7/2015

Paul Molloy

Jan. 7th 2015
(Date)

*(Premarket Notification [510(k)] number)

Declaration of Conformity

As required by the Design Control Process, designated individuals performed all verification and validation activities and the results demonstrated that the pre-determined acceptance criteria were met.

The manufacturing facility is in conformance with the Design Control procedure requirements as specified in the 21 CFR 820.30 as well as Quality system regulation and the records are available for review.

Name: AL DIAZ

Title: V.P. OF OPERATIONS

Date: 1/7/2014

Signature:

Name: KEN CHESNIN

Title: DIRECTOR OF R&D

Date: 1/7/2015

Signature:

510(k) Premarket Notification

PleuraFlow® System

Applicant: ClearFlow, Inc
1630 S. Sunkist St. Suite E Anaheim California 92806

Contact: Dov Gal
ClearFlow Inc. 1630 S. Sunkist St. Suite E Anaheim California 92806
Phone: 714-916-5014

Submission Date: January 7, 2015

This submission contains CONFIDENTIAL material and information and should be restricted in its distribution. Do not copy without the permission of the Applicant.

Table of Content

Acceptance Checklist

Section 1: Medical Device User Fee Cover Sheet (FDA 3601)

Section 2: CDRH Cover Sheet (FDA 3514)

Section 3: 510(k) Cover Letter 1

Section 4: Indications for Use Statement 4

Section 5: 510(k) Summary 5

Section 6: Truthful and Accurate Statement 8

Section 7: Class III Summary and Certification (N/A) 9

Section 8: Financial Certification or Disclosure Statement (N/A) 10

Section 9: Declarations of Conformity and Summary Reports 11

Section 10: Executive Summary 14

Section 11: Device Description 18

Section 12: Substantial Equivalence Discussion 22

Section 13: Proposed Labeling 25

Section 14: Sterilization, Shelf Life, Packaging 26

Section 15: Biocompatibility 30

Section 16: Software (N/A) 32

Section 17: Electromagnetic Compatibility and Electrical Safety (N/A) 33

Section 18: Performance Testing – Bench 34

Section 19: Performance Testing – Animal (N/A) 35

Section 20: Performance testing – Post Market Clinical Follow up (PMCF) study 36

Section 21: Performance testing – Post Market Human Factors and Usability Study for The PleuraFlow® ACT™ System 42

Section 22: Conclusion 45

Appendices

Appendix 11-1: Device Drawings

Appendix 13-1: Instructions for Use

Appendix 13-2: Product Labels

Appendix 14-1: Real Time Shelf Life Testing

Appendix 20-1: List of References

Appendix 21-1: Risk Management Report

Section 1: Medical Device User Fee Cover Sheet

Section 2: CDRH Cover Sheet

Section 3: 510(k) Cover Letter

January 7, 2015

U.S. Food and Drug Administration Center for
Devices and Radiological Heath Document Mail
Center – WO66-G609 10903 New Hampshire
Avenue
Silver Spring, MD 20993-0002

Re: Traditional 510(k) Premarket Notification PleuraFlow® System similar to predicate, K093565 by ClearFlow Inc. (AKA Clear Catheter Systems Inc.)

In accordance with Section 510(k) of the Federal Food, Drug and Cosmetic Act, as amended, and in conformance with Title 21 of the Code of Federal Regulations Part 807 (21 CFR §807), Subpart B, this 510(k) Premarket Notification is being submitted prior to the date when ClearFlow proposes to introduce into interstate commerce, for commercial distribution, the ClearFlow PleuraFlow® System. No applicable mandatory performance standards or special controls exist for this device.

Per the instructions accessed at http://www.fda.gov/cdrh/elecsub.html, an electronic copy is being provided with this submission and it is an exact duplicate of the original paper submission.

This submission contains methods, data, and analysis of these data, which the Sponsor considers "Trade Secret", commercially privileged and confidential. In accordance with 21 CFR §20.61, this information may not be disclosed to the public in accordance with Freedom of Information (FOI) Act. This submission follows the format suggested in FDA's *Guidance for Industry and FDA Staff: Format for Traditional and Abbreviated 510(k)s*, dated August 12, 2005 and updated on November 17, 2005. In accordance with the referenced guidance, the following details are being provided in this cover letter:

- Submission Type: Traditional 510(k)
- Trade Name: PleuraFlow® System
- Recommended classification regulation: 21 CFR 878.4780; Powered suction pump.
- Common name: Introduction/drainage; wound drain catheter system
- Class: II

- Panel: General & Plastic Surgery
- Product Codes: Primary—OTK; Subsequent—GBX
- Basis for submission: PleuraFlow®System is the same as previously cleared under 510(k) #(K093565). The basis for submission is to amend the Indication for Use based on data obtained from current product's users during post market evaluation.

Design and Use of the Device

Question	Yes	No
Is the device intended for prescription use (21 CFR 801 Subpart D)? A	X	
Is the device intended for over-the-counter use (21 CFR 807 Subpart C)?		X
Does the device contain components derived from a tissue or other biologic source?		X
Is the device provided sterile?	X	
Is the device intended for single use?	X	
Is the device a reprocessed single use device?		X
If yes, does this device type require reprocessed validation data?		N/A
Does the device contain a drug?		X
Does the device contain a biologic?		X
Does the device use software?		X
Does the submission include clinical information? **It includes Post market study**		N/A

The official contact person for this submission is the undersigned.

Sincerely,

Dov Gal

Dov Gal, DVM, MBA
ClearFlow, Inc.
1630 S. Sunkist t. Suite E
Anaheim CA 92806
Ph: 714.916.5014
Fax: 714.916.5019
Email: dgal@clearflow.com

Official Correspondent for ClearFlow, Inc.

Section 4: Indications for Use Statement

510(k) Number:

Device Name: PleuraFlow® System

Indications for Use: The PleuraFlow® system is indicated for use during open surgical procedures and trauma in order to prevent or minimize chest tube occlusion and subsequent retained blood and fluid accumulation within the operative site after closure of the surgical wound. The device is indicated for use in cardiothoracic surgical procedures. The product is indicated for adult and pediatric patients under clinical settings.

Prescription Use ___X____ AND/OR Over-The-Counter Use _____

(Part 21 CFR 801 Subpart D) (21 CFR 807 Subpart C)

(PLEASE DO NOT WRITE BELOW THIS LINE-CONTINUE ON ANOTHER PAGE IF NEEDED)

Concurrence of CDRH, Office of Device Evaluation (ODE)

Page 1 of __1

Section 5: 510(k) Summary

The following information is provided as required by 21 CFR § 807.87 for **PleuraFlow® System** 510(k) premarket notification. In response to the Safe Medical Devices Act of 1990, the following is a summary of the safety and effectiveness information upon which the substantial equivalence determination is based.

Date of Submission: January 7, 2015

Applicant: Clear Flow, Inc.
1630 S. Sunkist St., Suite E
Anaheim CA 92806

Primary Contact Person: Dov Gal, DVM
ClearFlow, Inc.
1630 S. Sunkist St., Suite E
Anaheim CA 92806
Phone: 714-916-5014
Fax: 714-916-5019
Email: dgal@clearlflow.com

CEO/ President: Paul Molloy
ClearFlow, Inc.
1630 S. Sunkist St., Suite E
Anaheim CA 92806
Phone: 714-905-5271
Fax: 714-916-5019
Email: pmolloy@clearlflow.com

Device Proprietary Name: PleuraFlow® System

Device Common Name: Introduction/drainage; wound drain catheter system.

Regulatory Class and Name: Class II, Powered Suction Pump

Product Codes: OTK and GBX

Indication For Use: The PleuraFlow System is indicated for use during open surgical procedures and trauma in order to prevent or minimize chest tube occlusion and subsequent retained blood and fluid accumulation within the operative site after closure of the surgical wound. The device is indicated for use in cardiothoracic surgical procedures. The product is indicated for adult and pediatric patients under clinical settings.

Predicate Device: Predicate device is the PleuraFlow Catheter System (K093565) by ClearFlow, Inc., AKA Clear Systems, Inc.

Device Description: The PleuraFlow System is comprised of a silicone Chest Tube and a Clearance Apparatus. The PleuraFlow Chest Tube is available in four (4) standard sizes (20FR, 24FR, 28FR and 32FR). Each Chest Tube has a Cut Length of 19 inches (48.3 cm) with graduated measurements in centimeters from the distal eyelet. Each Chest Tube has a barium stripe to facilitate visualization. The Chest Tube is connected to a Clearance Apparatus, which is connected to the tubing from the drainage canister. The Clearance Apparatus consists of a Guide Tube and a PTFE-coated Clearance Wire with a Loop set on its distal end, bent at a 105-degree angle. The Clearance Apparatus is advanced into the PleuraFlow Chest Tube using a magnetic Shuttle. When indicated, the Clearance Wire and Loop is advanced and retracted within the PleuraFlow Chest Tube to proactively prevent or break up and clear any tube obstructions or clogging to keep the tube patent.

Indications for Use: The PleuraFlow System is indicated for use during open surgical procedures and trauma in order to prevent or minimize chest tube occlusion and subsequent retained blood and fluid accumulation within the operative site after closure of the surgical wound. The device is indicated for use in cardiothoracic surgical procedures. The product is indicated for adult and pediatric patients under clinical settings.

Performance Data: The safety and effectiveness of the PleuraFlow System has been previously demonstrated through design validation and verification that were cleared under 510(k) (K093565). Performance has been further demonstrated through post-market data.

Use of the device over the last four (4) years has shown that the product has significantly reduced the complications for patients who have received treatment with PleuraFlow versus other products during and after surgery.

Studies have linked both chest tube clogging and retained pericardial blood with POAF.[2, 10] There is a substantial body of literature illustrating that shunting blood through pericardial windows to divert the blood to the pleural spaces can reduce POAF.[10,] demonstrates by adhering to a protocol developed to maximize chest tube patency, POAF can be reduced. Consistent with prior studies, this link appears to be related to reducing RBS. A manuscript titled "Reduction in Interventions for Post Operative Effusions and Atrial Fibrillation with Active Clearance of Chest Drainage Catheters" was submitted to the Journal of Thoracic and Cardiovascular Surgery. Authors are Sirch J.1, Ledwon M.1, Püski T.1, Grossmann I.1, Boyle EM.2, Pfeiffer S.1,Fischlein T.1 From the following institutions:

1. Cardiac Surgery, Heart Center, Paracelsus Medical University, Nurenberg, Germany,
2. St. Charles Medical Center, Bend, Oregon, United States.

Conclusion: The evaluation of the PleuraFlow System does not raise any additional concerns regarding safety and effectiveness and may therefore be considered substantially equivalent to the predicate device.

Section 6: Truthful and Accurate Statement

Premarket Notification

Truthful and Accurate Statement

[as required by 21 CFR § 807.87k)]

I certify, in my capacity as Chief Executive Officer of ClearFlow, Inc., I believe to the best of my knowledge, that all data and information submitted in the premarket notification are truthful and accurate and that no material fact has been omitted.

_____
Paul Molloy

_____
(Date)

*(Premarket Notification [510(k)] number)

Section 7: Class III Summary and Certification

This section is **not applicable**. The device is Class II and hence, not regulated as a Class III device.

Section 8: Financial Certification or Disclosure Statement

N/A: There were no clinical studies conducted in accordance with 21 CFR 807.87(i).

Section 9: Declarations of Conformity and Summary Reports

PlueraFlow System is manufactured under QSR and ISO 13485 including EN ISO 14971:2012: Medical Devices -- Application of risk management to medical devices. The Risk Management has been updated to 2012 version. The device has not been changed compared to the predicate, and all the performance testing had been originally performed and submitted during the predicate clearance. As such, there were no deviations from standards used for the predicate or adaptations to other standards. No applicable mandatory performance standards or special controls exist for this device. ***The product type does not have any related guidance or referenced standards for 21 CFR 878.4780—"Powered suction pump".***

The following standards were adapted during the product design phase and gap analysis performed as the standards were updated to assure safety and efficacy:

- EN 1617:1997 Sterile drainage Catheters and accessory devices for single use.
- EN ISO15223-1: 2012: Medical devices – Symbols to be used with medical device labels, labeling and information to be supplied – Part 1: General requirements.
- EN ISO 10993-1:2009 Biological Evaluation of Medical Devices -- Part 1: Evaluation and testing. (Biocompatibility)
- EN ISO 10993-3:2009 Biological Evaluation of Medical Devices -- Part 3: Tests for genotoxicity, carcinogenicity and reproductive toxicity.
- EN ISO 10993-5:2009 Biological Evaluation of Medical Devices -- Part 5:Tests for in vitro cytotoxicity.
- EN ISO 10993-6:2009 Biological Evaluation of Medical Devices -- Part 6: Tests for local effects after implantation.
- EN ISO 10993-7/AC:2009 Biological Evaluation of medical Devices -- Part 7: Ethylene Oxide sterilization residual.
- EN ISO 10993-10:2009 Biological Evaluation of medical Devices -- Part 10: Tests for irritation and delayed-type hypersensitivity. (Biocompatibility)
- EN ISO 10993-11:2009 Biological Evaluation of medical Devices -- Part 11: Tests for systemic toxicity. (Biocompatibility)
- EN ISO 11607-1:2009: Packaging for terminally sterilized medical devices. Part1:

Requirements for materials, sterile barrier systems and packaging systems.

- ANSI/AAMI/ISO 11135-1:2007 - Sterilization of health care products – Ethylene Oxide – Part 1: Requirements for the development, validation, and routine control of a sterilization process for medical devices.
- ANSI/AAMI/ISO TIR11135-2:2008 – Sterilization of health care products – Ethylene Oxide – Part 2: Guidance on the application of ANSI/AAMI/ISO 11135-1, and AAMI TIR28:2009, Product Adoption and Process Equivalency for Ethylene Oxide Sterilization.

Declaration of Conformity

As required by the Design Control Process, designated individuals performed all verification and validation activities and the results demonstrated that the pre-determined acceptance criteria were met.

The manufacturing facility is in conformance with the Design Control procedure requirements as specified in the 21 CFR 820.30 as well as Quality system regulation and the records are available for review.

Name: _____ Name: _____

Title: _____ Title: _____

Date: _____ Date: _____

Signature: _____ Signature: _____

Section 10: Executive Summary

Device Background

The PleuraFlow System is a wound drainage tube with an integrated tube Clearance Apparatus that allows the user to clear patient's retained blood and fluids, which, if not cleared, could impair surgical wound healing. The size, configuration, and materials of these commercially available four (4) models of the System (20FR, 24FR, 28FR and 32FR) have not changed compared to the predicate. The mechanism of action and indications are the same as the predicate device, PleuraFlow System (K093565). The device uses mechanical "scraping" of the sides of the chest tube to loosen material so that it can be suctioned out of the device.

The Clearance Apparatus uses magnetic coupling between magnets contained within the Shuttle; one set of magnets, which is external to the Guide Tube, and another set of magnets inside the Guide Tube that are permanently attached to the distal end of the Clearance Wire, farthest from patient. The magnets are within the Guide tube, which is external to the patient. This magnetic mechanism is identical to the system, cleared under 510K (K093565).

Functional testing, packaging and sterilization validation, and materials information, are identical to predicate. These are same as in the original predicate submission, which support the substantial equivalence and safety and effectiveness of the device.

Device Proprietary Name:	PleuraFlow® System.
Device Common Name:	Introduction/drainage; wound drain catheter system.
Regulatory Class & Name:	Class II, Powered Suction Pump.
Product Codes:	OTK and GBX.
Indication For Use:	The PleuraFlow System is indicated for use during open surgical procedures and trauma in order to prevent or minimize chest tube occlusion and subsequent retained blood and fluid accumulation within the operative site after closure of the surgical wound. The device is indicated for use in cardiothoracic surgical procedures. The product is indicated for adult and pediatric patients under clinical settings.

Predicate Device: Predicate device is the PleuraFlow Catheter System (K093565) manufactured by ClearFlow, Inc., AKA Clear Catheter Systems, Inc.

Device Description: The PleuraFlow System is comprised of a silicone Chest Tube and a Clearance Apparatus. The PleuraFlow Chest Tube is available in four (4) standard sizes (20FR, 24FR, 28FR and 32FR). Each chest tube Cut Length is 19 inches (48.3 cm) with graduated measurements in centimeters from the distal eyelet. Each chest tube has a barium stripe to facilitate visualization. The Chest Tube is connected to a Clearance Apparatus, which is connected to the tubing from the drainage canister. The PleuraFlow Clearance Apparatus consists of a Guide Tube and a PTFE-coated Clearance Wire and Loop set on its distal end, bent at a 105- degree angle. The Clearance Apparatus is advanced into the PleuraFlow Chest Tube using a magnetic Shuttle. When indicated, the Clearance Wire and Loop is advanced and retracted within the PleuraFlow Chest Tube to proactively prevent or break up and clear any tube obstructions or clogging to keep the tube patent.

Indications for Use: The PleuraFlow System is indicated for use during open surgical procedures and trauma in order to prevent or minimize chest tube occlusion and subsequent retained blood and fluid accumulation within the operative site after closure of the surgical wound. The device is indicated for use in cardiothoracic surgical procedures. The product is indicated for adult and pediatric patients under clinical settings.

Performance Data: The safety and effectiveness of the PleuraFlow System have been previously demonstrated through design validation and verification that were cleared under 510(k) (K093565). The information has been further demonstrated through post market data.

The use of device over the last 4 years has shown that the product has significantly reduced the complications for patients who have received treatment with PleuraFlow System versus other products during and after surgery. A manuscript titled “Reduction in Interventions for Post Operative Effusions and Atrial Fibrillation with Active Clearance of

Chest Drainage Catheters" was submitted to the Journal of Thoracic and Cardiovascular Surgery. Authors are Sirch J.1, Ledwon M.1, Püski T.1, Grossmann I.1, Boyle EM.2, Pfeiffer S.1,Fischlein T.1 From the following institutions:

1. Cardiac Surgery, Heart Center, Paracelsus Medical University, Nurenberg, Germany,
2. St. Charles Medical Center, Bend, Oregon, United States.

Performance Data: Based on the information drawn from the Post-market studies, Verification and Validation, as well as the risk assessment and change assessments, it is demonstrated that the device is as safe and effective as the predicate device. The post-market study revealed newer benefits of using the device as identified in the Indication for Use and supported by the post-market studies.

(Table 12-1)

Feature	New Device	Predicate (K093565)
Product code	OTK, GBX	Same
21 CFR	878.4780	Same
Classification	II	Same
Indication for Use	The PleuraFlow System is indicated for use during open surgical procedures and trauma in order to prevent or minimize chest tube occlusion and subsequent retained blood and fluid accumulation within the operative site after closure of the surgical wound. The device is indicated for use in cardiothoracic surgical procedures.	The PleuraFlow Catheter System is indicated for use as an adjunctive device during open surgical procedures and trauma in order to prevent fluid accumulation within the operative site after closure of the surgical wound. The device is indicated for use in thoracic surgical procedures.
User	Surgeons and nurses	Same
Patient population	All ages including pediatric and adult	Same
Environment	Clinical settings	Same
Biocompatibility	In compliance with ISO 10993, as applicable	Same
Sterility	Sterile and single patient use	Same
Sizes/Configuration	20FR-32FR	Same
Materials	Silicone, plastic, ink and stainless steel; Biocompatible	Same
Evacuation mechanism	Magnetic force	Same
Radiopaque	Yes	Same
Magnetic shielding	Shielding around the magnet system is provided to greatly reduce the magnetic field experienced by the patient or user and to prevent interference with other devices.	Same
Magnetic flux density	Less than 1mT within 6 inches of the device	Same
Magnetic material	Plated Rare Earth magnet	Same

Section 11: Device Description

The PleuraFlow® System incorporates a Clearance Apparatus referred to as Active Clearance Technology® (ACT™), which is intended to prevent clogging and occlusion of PleuraFlow Chest Tubes. The product is used for pleural and mediastinal drainage after cardiothoracic surgery and trauma.

The primary components of the System are the PleuraFlow Chest Tube and the PleuraFlow Clearance Apparatus. The PleuraFlow Chest Tube is a silicone chest tube. It is connected to a Clearance Apparatus, which is connected to the tubing from the drainage canister. The PleuraFlow Clearance Apparatus consists of a Guide Tube with a Clearance Wire and Loop that is advanced into the PleuraFlow Chest Tube using a magnetic Shuttle. When indicated, the Clearance Wire and Loop is advanced and retracted within the PleuraFlow Chest Tube to proactively prevent or break up and clear any tube obstructions or clogging to keep the tube patent. Figure 1 below is a pictorial representation of the PleuraFlow System.

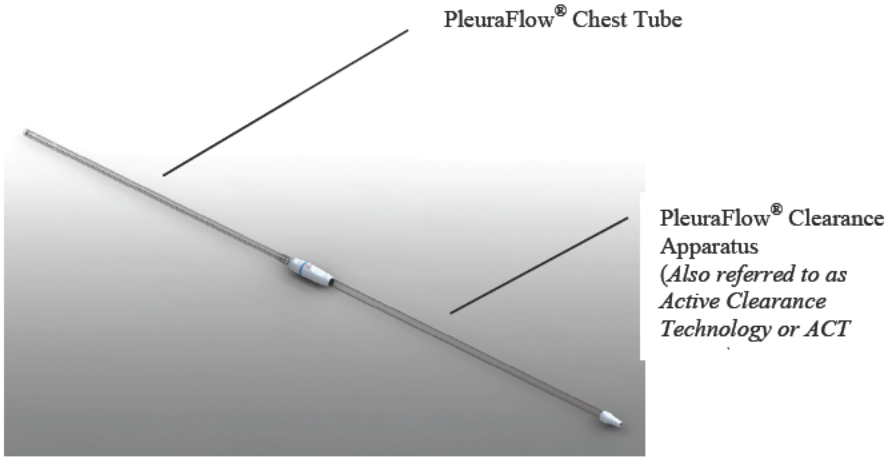

Figure 1 - PleuraFlow® System

The PleuraFlow System consists of one PleuraFlow Chest Tube and one Clearance Apparatus contained in a single sterile package similar to the predicate. The Chest Tube is included in the package to ensure it is of the appropriate length and inner diameter to accommodate the Clearance Wire and Loop in the Clearance Apparatus when fully advanced into the Chest Tube. The PleuraFlow Systems are available in four (4) sizes- 20FR, 24FR, 28FR and 32FR. Each of the Chest Tubes has graduated measurements in centimeters from the distal eyelet. There is a barium stripe in the Chest Tube to facilitate visualization in the chest cavity under x-ray. The Chest Tube is connected to the Clearance Apparatus. A connector at the distal end of the Clearance Apparatus connects to commercially available drainage vacuum systems.

Technological Characteristics

The Clearance Apparatus is composed of a PVC Guide Tube that is used to drain blood, fluid, and air. Inside the Guide Tube there is a PTFE-coated guidewire that has a loop bent at a 105-degree angle as illustrated in Figure 2. This is called the Clearance Wire and Loop.

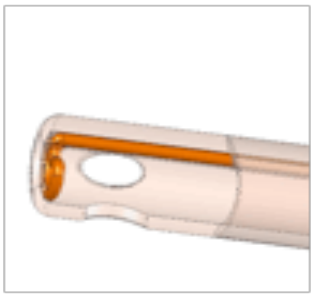

Figure 2– Clearance Wire and Loop

The Clearance Wire and Loop is sized to minimize the likelihood of exiting the Chest Tube. The Clearance Wire and loop is magnetically driven by two sets of magnets; one set encased in the plastic handle of the Shuttle and one at the base (distal end) of the Clearance Wire farthest from patient, as seen in Figure 3.

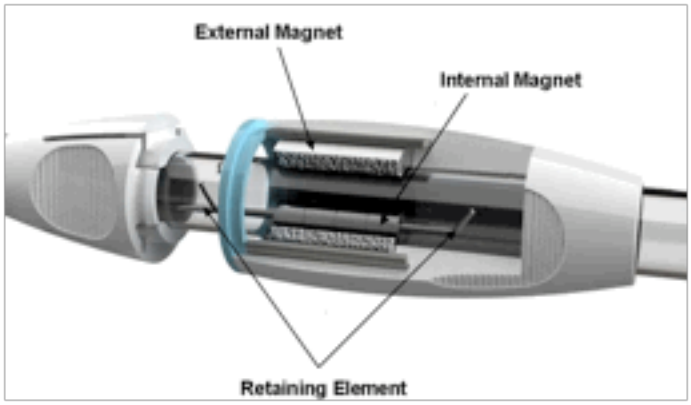

Figure 3 – Shuttle

Because the external magnet remains outside the Guide Tube, it allows the internal environment of the tube to remain sterile, while facilitating the clearing mechanism of the Clearance Wire and Loop to remain within the Chest Tube. It is important to note that the magnets are intended to facilitate coupling and are not intended to provide energy to the patient. A magnetic shield is provided in the external housing to reduce the magnetic field that extends beyond the Shuttle Guide. A retention member is set on the Clearance Wire and Loop in proximity to the internal magnets to prevent the Clearance Wire and Loop from ever completely exiting the Guide Tube or the Clearance Wire and Loop from exiting the proximal tip of the Chest Tube.

When the Shuttle is advanced and retracted along the Guide Tube, the Clearance Wire and Loop moves back and forth inside the Chest Tube, which proactively prevents or breaks up and clears any obstructions from within the Chest Tube and pulls them towards the drainage canister. The suction mechanism from the drainage canister then pulls any clot and debris from the Clearance Apparatus to the drainage canister.

Intended Use

The device is intended for use for prolonged duration (>24 hours to ≤14 days). The device is provided sterile, and is considered surgically invasive. Figure 4 below is a pictorial representation of the device set-up as it is intended to be used in the clinical settings.

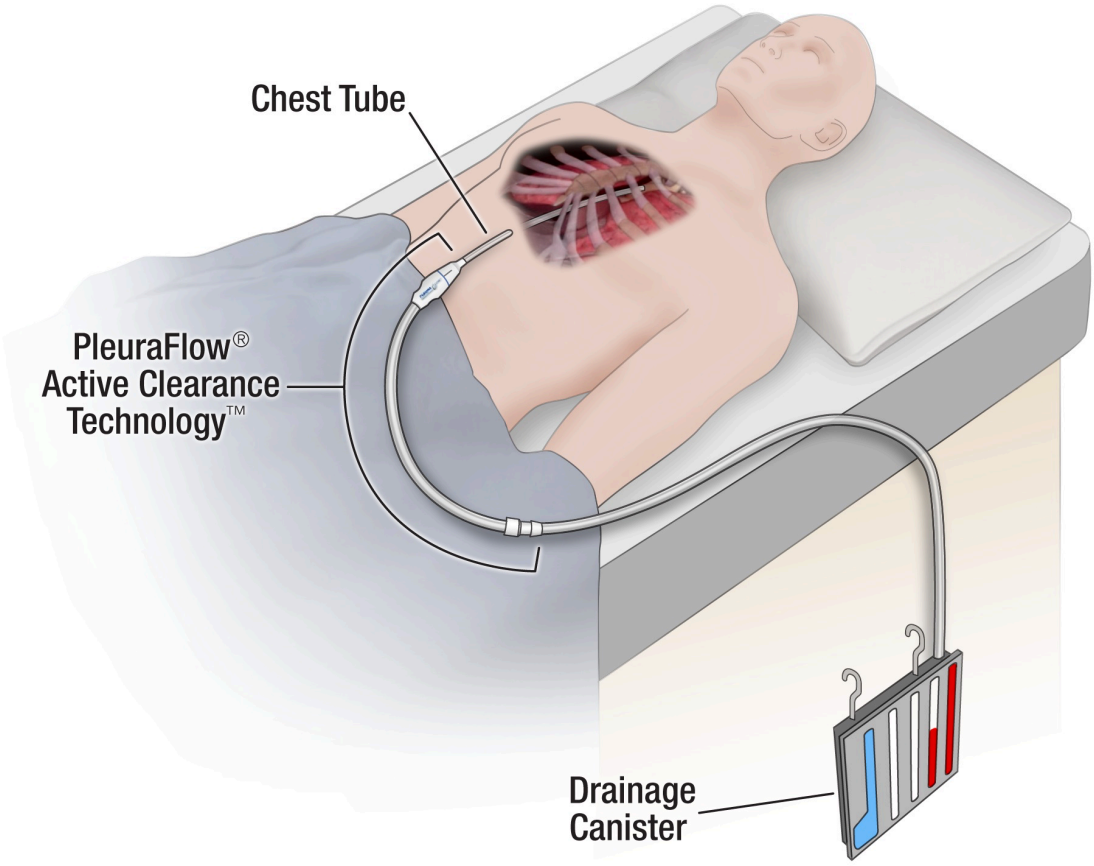

Figure 4- PleuraFlow set up

Design Control

The PleuraFlow System was developed under Design Control. After generation of a device concept, the design control process was initiated by creation of a design and development plan. Next, design input

requirements were generated and risk management initiated. Design outputs including drawings and productions documents were then realized. Based on the requirements, a design verification and validation plan was developed and a device master record initiated. Design verification tests were completed to verify that the design outputs met the design inputs. A master validation plan was created and process validations completed. Design validation was conducted to validate that the device met the user requirements. Design reviews and risk management were conducted throughout. Regulatory submissions were completed prior to commercialization.

Design control including design input considered user interface and design verification activities were conducted throughout the development process including task/function analyses, user studies, prototype tests and mock-up reviews. Formative and validation testing fulfill the requirements to test the device under realistic conditions. Validation testing demonstrated that the potential for use error has been minimized.

Performance data

Performance data were collected to verify and validate the device. Testing included tensile strength of bonded joints, flow rate, kink resistance and leak testing. Dimensional testing and radiographic testing were also conducted. Strength of the magnetic coupling, Clearance wire passage, as well as magnetic field-testing were completed. Package integrity, transit testing, and environmental testing were completed. Shelf life up to 32 months was completed, initially using accelerated aging followed by real-time aging. The real-time aging study is included in this submission, as it was not part of the predicate submission, (Appendix 14-1). Testing on animals was conducted and a limited clinical study was completed; those were not repeated since the predicate clearance.

Device drawings are presented in Appendix 11-1. Detailed materials information is contained in Section 15, Biocompatibility.

Section 12: Substantial Equivalence Discussion

Equivalent Device Information

ClearFlow's, AKA Clear Catheter Systems PleuraFlow System, is substantially equivalent in indications and performance characteristics to the ClearFlow, AKA Clear Catheter System, PleuraFlow Catheter System, shown in Table 12-1.

A comparison of the materials of construction, physical dimensions, performance characteristics and Indications for Use of ClearFlow, Inc. PleuraFlow System to the predicate device as shown in Table 12-1. There are no differences in material, dimensions and physical characteristics with the predicate. The PleuraFlow System has the same or similar intended use, similar Indications for Use, same principle of operation, and same performance characteristics as its predicate device and is, therefore, substantially equivalent to the predicate device.

Table 12-1. Device Comparison to Predicate Devices

Feature	**New Device**	**Predicate** (K093565)
Product code	OTK, GBX	Same
21 CFR	878.4780	Same
Classification	II	Same
Indication for Use	The PleuraFlow System is indicated for use during open surgical procedures and trauma in order to prevent or minimize chest tube occlusion and subsequent retained blood and fluid accumulation within the operative site after closure of the surgical wound. The device is indicated for use in cardiothoracic surgical procedures	The PleuraFlow Catheter System is indicated for use as an adjunctive device during open surgical procedures and trauma in order to prevent fluid accumulation within the operative site after closure of the surgical wound. The device is indicated for use in thoracic surgical procedures.
User	Surgeons and surgical nurses	Same
Patient population	All ages including pediatric and adult	Same
Environment	Clinical settings	Same
Biocompatibility	In compliance with ISO 10993 as applicable	Same
Sterility	Sterile and single patient use	Same
Sizes/Configuration	20FR-32FR	Same
Materials	Silicone and stainless steel; Biocompatible	Same
Evacuation mechanism	Magnetic force	Same
Radiopaque	Yes	Same
Magnetic shielding	Shielding around the magnet system is provided to greatly reduce the magnetic field experienced by the patient or user and to prevent interference with other devices.	Same
Magnetic flux density	Less than 1mT within 6 inches of the device	Same
Magnetic material	Plated Rare Earth magnet	Same

Significant Differences from Predicate Device

The PleuraFlow system has not been modified and is the same as the predicate device (K093565) in design, materials, technological characteristics and its intended use. Verification testing demonstrates that the device continues to meet its design requirements and no additional risks have been identified. *The use of device over the last 4 years has shown that the product has significantly reduced the post cardiac surgery complications for patients who have received treatment with PleuraFlow System versus other products during and after cardiothoracic surgery. This information, as contained in the submission, is presented to amend the Indication for Use as follows.*

Predicate device: "The PleuraFlow Catheter system is indicated for use as an adjunctive device during open surgical procedures and trauma in order to prevent fluid accumulation within the operative site after closure of the surgical wound. The device is indicated for use in thoracic surgical procedures."

New Device: "The PleuraFlow System is indicated for use during open surgical procedures and trauma in order to prevent or minimize chest tube occlusion and subsequent retained blood and fluid accumulation within the operative site after closure of the surgical wound. The device is indicated for use in cardiothoracic surgical procedures. The product is indicated for adult and pediatric patients under clinical settings."

Section 13: Proposed Labeling

The labeling is similar to the predicate.

There are no current marketing materials for the amended Indications for Use (New device).

See Appendix 13-1 for the Instructions for Use.

See Appendix 13-2 for the Pouch Label, Case Box Label and Shipping Box Label.

Section 14: Sterilization, Shelf Life, Packaging

There are no changes to sterilization method, shelf life and/or packaging. The PleuraFlow System is supplied sterile and will remain so, as long as the unit individual package is unopened and undamaged during the indicated shelf life. The device is sterilized with ethylene oxide and is indicated for single patient use only. The device is not intended for reuse or re-sterilization, therefore, directions for reuse and reprocessing have not been provided.

Sterilization Method

Products are sterilized with ethylene oxide (EO) by the same contract sterilizer as previously presented during predicate submission, (b)(4) Trade Secret Process- FDA Establishment registration No. (b)(4)). The sterilization validation activities were performed and documented in (b)(4) . The sterilization process is conducted under a contractual agreement with Xeridiem Medical, a 3rd Party Contract Manufacturer. The procedure for the validation is consistent with ANSI/AAMI/ISO 11135-1:2007 - Sterilization of health care products – Ethylene Oxide – Part 1: Requirements for the development, validation, and routine control of a sterilization process for medical devices, ANSI/AAMI/ISO TIR11135-2: 2008 – Sterilization of health care products – Ethylene Oxide – Part 2: Guidance on the application of ANSI/AAMI/ISO 11135-1, and AAMI TIR28: 2009 - Product Adoption and Process Equivalency for Ethylene Oxide Sterilization.

All acceptance criteria outlined by (b)(4) for (b)(4) Trade Secret Process- , EC residuals and B/F testing, as well as bioburden enumeration of the Master Challenge Device (MCD), were met. All Biological Indicators (BIs) included in the External Process Challenge Device (ePCDs) and Internal Process Challenge Device (iPCDs) demonstrated zero growth after being subjected to the (b)(4) sterilization process as required by section (b)(4) Trade

This result successfully established the Sterility Assurance Level (SAL) of 10^{-6}.

EO Residuals Results

All acceptance criteria related to the EO residuals testing were met. All samples tested for EO residuals underwent two consecutive full sterilization cycles prior to EO residual testing as required by section (b)(4) Trade

B/F Testing Results

Met the acceptance criteria of all products being demonstrated to be non-bacteriostatic and non-fungistatic when tested for bacteriostasis and fungistasis, as required by (b)(4) Trade Secret [redacted] The testing confirmed the validity of the product sterility test results.

Product Bioburden

All MCD samples contained bioburden levels below the alert levels defined in (b)(4) [redacted] therefore all samples met the acceptance criteria for product bioburden levels as defined in section (b)(4) [redacted]

Biological Indicator (BI) Population Verification

The population of the biological indicator met the acceptance criterion.

Table 14-1 below lists the sterilization parameters used to sterilize the packaged PleuraFlow System.

Table 14-1 - Cycle Parameters

(b)(4) Trade Secret Process- Product Specs

[redacted]

Shelf life

Shelf Life testing is the same one developed and used for the predicate PleuraFlow System.

Real time testing to support 32-month shelf life for the predicate PleuraFlow System was conducted, to extend the original 2-year shelf life previously presented during predicate submission. The real time aging report is presented in Appendix 14-1.

Description of the packaging to maintain the device's sterility

There are no changes to the packaging from the predicate. The device is mounted on HDPE restraint cards and packaged in a Tyvek/Poly chevron pouch. Ten pouches are packaged in a corrugate carton along with Instructions for Use.

Section 15: Biocompatibility

Per ISO 10993-1, the PleuraFlow System is categorized as an external communicating, tissue/bone/dentin, prolonged contact device. The following tables list the materials and patient contact classifications.

Table 15-1 - Patient/fluid contacting

(b)(4) Trade Secret Process-Product Specs	[redacted]	[redacted]
	[redacted]	[redacted]
	[redacted]	[redacted]
	[redacted]	[redacted]
[redacted]	[redacted]	[redacted]
[redacted]	[redacted]	[redacted]
	[redacted]	[redacted]
[redacted]	[redacted]	[redacted]
[redacted]	[redacted]	[redacted]

Table 15-2 - Non-patient contacting components /Materials

(b)(4) Trade Secret Process-Product Specs	[redacted]	[redacted]
	[redacted]	[redacted]
	[redacted]	[redacted]
	[redacted]	[redacted]
	[redacted]	[redacted]
	[redacted]	[redacted]
	[redacted]	[redacted]
	[redacted]	[redacted]
[redacted]	[redacted]	[redacted]
[redacted]	[redacted]	[redacted]
	[redacted]	[redacted]
[redacted]	[redacted]	[redacted]
[redacted]	[redacted]	[redacted]

(b)(4) Trade Secret Process- Product Specs	[redacted]	[redacted]
[redacted]	[redacted]	[redacted]
[redacted]	[redacted]	[redacted]
[redacted]	[redacted]	[redacted]

Identical to the predicate, the materials of the PleuraFlow System in contact with the patient have a long history of use in cardiothoracic surgery. Biocompatibility testing of the PleuraFlow System, required by ISO 10993-1 and FDA G-95-1, were performed by an FDA registered facility, (b)(4) Trade Secret P P d t. The testing is listed in the following table.

Table 15-3: Biocompatibility tests and requirements

ISO 10993-1 Test	Materials
Cytotoxicity	All materials
Sensitization	All materials
Irritation	All materials
System toxcicity system injection	Patient/fluid contact materials only
System toxcicity material mediated pyrogen	Patient/fluid contact materials only
Subacute toxicity*	Patient/fluid contact materials only
Genotoxicity (Ames)	Patient/fluid contact materials only
Genotoxicity (Chromosomal Aberration)	Patient/fluid contact materials only
Genotoxicity (Mouse Lymphoma)	Patient/fluid contact materials only
Implantation	Patient/fluid contact materials only

*Subacute testing was performed in place of subchronic testing since it more closely matches the final use of this device (short term, single implantation versus continuous implantation that is simulated by subchronic testing). This device is not intended as a permanent implant nor is it intended for repeated use.

Section 16: Software

Not applicable. The device has no software.

Section 17: Electromagnetic Compatibility and Electrical Safety

This section does not apply, as the product is not an electronic product. Enclosed magnet within the shuttle assembly was tested for possible interferences. Shielding has been incorporated into the device to reduce the magnetic field experienced by the user or patient. Verification testing has been performed to ensure that the magnetic field generated by the device does not adversely affect pacemakers and similar devices incorporating a reed switch.

Appropriate warnings have been provided in the labeling to alert the user to possible hazards (e.g., disconnection of the shuttle assembly prior to MRI). No changes have been made to the product design and associated risk compared to the predicate.

Section 18: Performance Testing – Bench

Bench testing was performed as part of the verification process. The design verification report was provided during the predicate submission (K093565).

Design control including design input considered user interface and design verification activities conducted throughout the development process including task/function analyses, user studies, prototype tests and mock-up reviews. Formative and validation testing fulfill the requirements to test the device under realistic conditions. Validation testing demonstrated that the potential for use error has been minimized.

Section 19: Performance Testing – Animal

N/A; no additional animal studies were conducted since there were no changes to the product. Animal studies were performed as part of the device validation and provided in the original submission (K093565).

Section 20: Performance testing – Post Market Clinical Follow up (PMCF) study

Background and Rational

A voluntary study, independent of ClearFlow was conducted by Paracelsus Medical University, Nürnberg, Germany. The study objective was to evaluate the benefits of the PleuraFlow System against the current standard of care. This single center, single-arm investigator study was conducted with two controls-- a historical control cohort preceding the test cohort and a prospective control cohort, which followed the test arm. The study principal investigator was Professor Doctor Theodor Fischlein, Chief of Cardiac Surgery, Heart Center, Paracelsus Medical University, Nürnberg, Germany.

Chest tubes are used on every cardiac surgery case, with a known failure rate due to clogging that is much higher than previously expected.[1, 2] Findings from the clinical study, that nearly 20% of patients require interventions for RBS, suggest this problem is a clinically significant and potentially a modifiable problem. Current approaches to preventing chest tube clogging, such as milking and stripping, have been proven ineffective and may be potentially harmful.[3, 4]

Make shift approaches such as opening tubes (after clogging occurs) and suctioning them or using a balloon catheter to remove clot raise safety concerns.[5, 6] Given the lack of suitable methods to routinely prevent chest tube clogging in the ICU, this study provides the first clinical evidence of the prophylactic role of the PleuraFlow system in significantly reducing the incidence of post-operative complications and post-operative deleterious outcomes.

Patients with post-operative atrial fibrillation (POAF) have worse outcomes, higher mortality, and significantly higher incremental costs.[7] Most protocols that aim to prevent POAF rely on pharmacologic prophylaxis, which are often limited by potential side effects and broad efficacy.[8]

Although there may be many factors that contribute to the development of POAF, RBS in the pericardium has been linked with playing a significant role, perhaps by inducing surface cardiac irritation and inflammation.[9]

Studies have linked both chest tube clogging and retained pericardial blood with POAF.[2, 10] There is a substantial body of literature illustrating that shunting blood through pericardial windows to divert the blood to the pleural spaces can reduce POAF.[10, 11]

This is the first study that we are aware of that demonstrates by adhering to a protocol developed to maximize chest tube patency, POAF can be reduced. Consistent with prior studies, this link appears to be related to reducing RBS.

In summary, the investigators observed a signification reduction in the composite endpoint of RBS as well as bloody effusions, POAF, ICU/IMCU times and 24 hour blood loss after implementing a formalized ACT protocol universally in consecutive patients undergoing heart surgery. These findings underscore the importance of chest tube patency in the early recovery after heart surgery and the value of the PleuraFlow system as a prophylactic alternative.

Methods

From January 1, 2011 to June 11, 2014, 3,241 adult cardiac surgical procedures were performed at the Nürnberg Clinic Heart Center. Patients were divided into 4 phases for analysis. Data was collected prospectively in a clinical database was interrogated retrospectively for data analysis.

Phase 0: Pre ACT Protocol: From January 3, 2011 to December 31, 2012, 1,849 cardiac surgery procedures were performed. A complete set of data was available from 1,849 patients. No patients in this group were treated with ACT. These patients were divided into those with and those without any one of the RBS interventions to establish a baseline for measurement of clinical outcomes.

Phase 1: Limited Implementation for ACT Protocol Development, Training and Compliance Verification. A multidisciplinary team developed a simple protocol to institute active clearance technology (ACT) to clear chest tubes in the first 24 hours after heart surgery. The PleuraFlow Active Clearance Technology System (See Section 11 Device Description)

Multidisciplinary team meetings were held for protocol development with senior cardiac surgical staff, cardiac surgery residents and fellows, anesthesiologists and critical care physicians and the nurses that work in the dedicated cardiac surgery ICU. The objective was to develop a simple, easy- to-perform protocol to implement ACT that could be integrated into the operative workflow. In prior studies, the most common sites for bleeding identified at reoperation were the mediastinum, sternum, internal thoracic artery bed, and coronary anastomosis sites[1, 2]. For sake of simplicity, it was decided to use a single ACT unit (28 Fr) in an anterior mediastinal position for the first 24 hours.

After 24 hours, the chest tube with ACT was removed, or the chest tube was left in place and the ACT pulled back and its use was discontinued. Most were removed the next day (2nd postoperative day). The surgeons were allowed to place additional conventional chest tubes in the posterior mediastinum and/or pleural spaces at their discretion, however in a majority only a single mediastinal ACT was utilized. Besides the single ACT in the anterior mediastinum *and* possibly other conventional chest tubes, no

additional ACT systems were inserted. This protocol allows for more frequent use early on, when chest tube outputs tend to be higher, and less so in subsequent hours as well as on an as needed basis[3]. The nurses were free to strip and milk the conventional chest tubes as they felt were needed. An extensive educational in-service was performed before universal implementation for training of all nurses and physician in the ICU and compliance verification (phase 1).

The protocol was rolled out in phase 1 starting on January 1, 2013 through November 30, 2013 during which time there were 914 heart surgery cases. During phase 1, feedback was obtained from the cardiothoracic surgery team on ease of use and suggestions for protocol refinement. Once it was determined this protocol was being used universally and there was general adherence to the protocol, phase 2 was begun. No clinical data was collected during phase 1 as the implementation and use was not uniform and universal until the end of this period.

Phase 2: Universal Implementation of ACT Protocol. After 11 months in phase 1 (January 1, 2013 to December 1, 2013), for protocol development and training, the investigators implemented the program universally in all consecutive patients to measure outcomes (December 1, 2013 to March 16, 2014).

Phase 3: Post Protocol Re-Measurement. To assess for other factors that may have changed with time, investigators stopped the universal implementation of ACT, returned to using all conventional chest tubes (without ACT) and repeated measurement of primary and secondary outcomes (March 18, 2014 to June 11, 2014).

The Bavarian Ethics Committee approved the study.

Measurement and Analysis

Preoperative data was collected from the institutional clinical database. Pre-operative data included age, sex, the administration of pre-operative antiplatelet or anticoagulants and the urgency of surgery (i.e., elective vs. non elective). Operative variables included the type of surgery (CABG, Valve, CABG+Valve, Other) and re-operative status. Procedures in the "Other" category included isolated ascending and aortic arch procedures.

The primary outcomes measured were interventions for RBS. RBS is a composite outcome consisting of any of the following interventions: take back for reopening of the surgical incision (re-exploration for hemorrhage); pericardial interventions (pericardial window or pericardiocentesis); and pleural interventions for hemothorax, pneumothorax or effusions. Patients that had the diagnosis of pleural or pericardial effusion or hemothorax or hemopneumothorax but did not undergo a specific invasive intervention or had conservative medical treatment (i.e. medications) were excluded.

Secondary outcomes included post-operative atrial fibrillation (POAF), cardiac arrest, permanent stroke, ICU/IMC days, hours on the ventilator, post-operative hospital length of stay (LOS), and the total chest tube drainage volume (mLs). This included pre discharge information only.

Investigators compared results from 1,849 patients before (phase 0) with 256 patients after universal implementation (phase 2), and then the results of stopping the protocol in 222 patients (phase 3), to determine the impact of ACT on outcomes.

The statistical analysis consisted of comparisons of RBS rates and complications using binary logistic regression, $\chi 2$ tests for non-continuous variables and Welch's T-test or Fisher's Exact Test, for continuous variables.

Results

There were no differences between patients in the historical control (phase 0) and the prospective test arm (phase 2), except an increased number of patients with CABG/Valve in phase 0 (Table 1). One fifth of the patients (361/1,849; 20%) had at least one intervention for RBS in phase 0 (Table 2). Patients that had interventions for more than one component of RBS were only counted once such that the total number that had one or more RBS diagnosis was 20%. Of these patients, 3.6% (66/1849) had a re-exploration for bleeding, 1.9% (35/1849) had an intervention for pericardial effusion, 12.7% (234/1,849) had an intervention for pleural effusion (thoracentesis or chest tube drainage), and 3.2% (60/1,849) had an intervention for pneumothorax (Table 3).

RBS was noted in 182/1,011 (18%) of CABG patients, 83/436 (19%) of valve patients, 55/260 (21%) and 41/142 (29%) in other patients. RBS was noted in 231 of 1231 elective surgeries (19%) and in 125 of 603 non-elective surgeries (21%). The difference in RBS among elective and no-elective surgeries was minor and not statistically significant (P = 0.35). Patients with RBS were more likely to suffer mortality (11% vs. 5%, P < .0001). Patients with RBS were also more likely to have higher mean 24-hour blood loss (756.6 +/-759.9 mL vs. 480.7 +/- 357.89, P < .00001). Patients with RBS were also more likely to have longer lengths of hospital stay (15.59 +/-13.53 days vs. 13.41 +/-11.23 days, P < .005).

After the universal implementation of ACT in phase 2, the percent of patients with interventions for ACT was reduced to 11%, representing a 42% reduction in RBS in comparison with phase 0 (P = 0.0021), (Table 2). In phase 2, 3.5% (9/256 patients) had a re-exploration for bleeding, 0.4% (1/256 patients) had an intervention for pericardial effusion, 6.6% (17/256 patients) required interventions for pleural effusion and 2.7% (7/256 patients) had interventions for pneumothorax. The rate of interventions to treat pleural effusion was significantly lower in comparison with Phase 0 (P = .008). The incidences of re-exploration for bleeding, intervention for pericardial effusion interventions for pneumothorax were equal or

marginally lower in Phase 2 than in Phase 0, however the differences did not reach significance (Table 3).

The cohort of Phase 2 patients had significantly shorter ICU/IMCU stays (p=.00075) and a significantly reduced incidence of post-

operative A Fib. (P=.0033). There was not a statistically significant reduction in hospital mortality (P=.41), cardiac arrest (P=1), permanent stroke (P = .81) or time on the ventilator (P= .26) between Phase 0 and Phase 2. Patients treated with the ACT protocol in Phase 2 had a statistically significant reduction in total chest tube drainage (469.04 vs 534.12 mL, P = .0067).

Once the ACT protocol was stopped and use of only conventional chest tubes was resumed (phase 3), the RBS rate returned to baseline (18% in phase 3 vs. 20% in phase 0, P = .54) and there was no longer a statistically significant decrease in POAF (24% in phase 3 vs. 29% in phase 0, P = 0.1). (Figures 1 and 2).

Table - 1 Pre Op Status and Operative Type

Pre Op Status	**Phase 0** **All patients** **(n=1,849)**	**Phase 2** **All patients** **(n=256)**	***P***
Age/years (±SD)	68.7±10.8	68.1±11.0	0.4
Male Gender	1,327 (72%)	199 (78%)	0.05
Operative Status- Elective	1,246 (67%)	177 (69%)	0.62
Pre Op Anticoagulant- Yes	1,423 (77%)	194 (76%)	0.74
Operative Type			
CABG	1,011; (54.6%)	148 (57.8%)	0.38
Valve	436 (23.6%)	63 (24.6%)	0.78
CABG + Valve	260 (14.1%)	20 (7.8%)	0.0078
Other	142 (7.7%)	25 (9.8%)	0.30
Reop Status-Yes	142 (8%)	22 (9%)	0.70

Table 2 - Outcomes

	Phase 0 All patients (n=1,849)	**Phase 2 All patients (n=256)**	**Percent Reduction**	***P***
RBS	361 (20%)	29 (11%)	42%	0.0021
Mortality	115 (6%)	12 (5%)	25%	0.41
Cardiac Arrest	46 (2%)	6 (2%)	0%	1
A Fib	543 (29%)	52 (20%)	1%	0.0033
Stroke-Perm	39 (2%)	4 (2%)	0%	0.81
ICU- Days in	4.92	3.60	27%	0.00075
LOS- Hospital	13.84	13.21	5%	0.37
Vent- Hours	49.26	39.50	20%	0.26
Drainage- (mL)	534.1	469.04	12%	0.0067

Table 3 - Composite RBS and RBS components

	Phase 0 All patients (n=1,849)	Phase 2 All patients (n=256)	*Percent Reduction*	*P*
RBS Composite	361 (20%)	29 (11%)	42%	0.0021
Re-Exploration	66 (3.6%)	9 (3.5%)	2%	1
Pericardial Interventions	35 (1.9%)	1 (0.4%)	79%	0.12
Pleural Interventions	234 (12.7%)	17 (6.6%)	48%	0.0074
Pneumothorax	60 (3.2%)	7 (2.7%)	16%	0.81

List of References

See Appendix 20-1.

Section 21: Performance Testing - Post Market Human Factors and Usability Study for The PleuraFlow® ACT™ System

The Human Factor study objective is intended to reduce use error, injuries from subject devices, and product recalls. This, in conjunction with risk analysis controls current risks and reduces future risks associated with device use and considering use environments and user interfaces. This would improve the quality of the device user interface such that errors that may occur during use of the device are either eliminated or reduced.

The manufacturer, ClearFlow, Inc., considers physical, perceptual, or cognitive abilities that do not exceed the abilities of the user; The use environment is recognized or understood by the user and does not impair the user's physical, perceptual, or cognitive capabilities when using the device; PleuraFlow System use is consistent with user's expectations or intuition about device operation and is used in ways that are anticipated and appropriate with adequate controls.

Hazards that mostly result from the device or component failure, which are not dependent on how the user interacts with the device (PleuraFlow System) were considered during risk analysis. The risk management (Appendix 21-1), additionally considered hazards for medical devices that are associated with device use. The post-market study objectives extend beyond safety and consider any possibilities to improve device design/labeling to improve usability.

Design control including design input considered user interface and design verification activities conducted throughout the development process including task/function analyses, user studies, prototype tests and mock-up reviews. Formative and validation testing fulfill the requirements to test the device under realistic conditions. Validation testing demonstrated that the potential for use error has been minimized.

- The following device factors were considered for potential users:
    - Identification of the end-users of the device
    - The level of training users will have and/or receive
    - User characteristics, such as functional capabilities, that could impact the safe and effective use of the device
    - Ways in which users might use the device that could cause harm

- The following device factors were considered for use environment:
  - Hospital, surgical suite, clinical setting.
- The following device factors were considered for user interface:
  - functions, capabilities, features
  - Indicated uses

The Human Factor study is in addition to other sources of information on known use-related hazards including journal articles, proceedings of professional meetings, newsletters, and relevant Internet sites.

Review of users feedback further validates the design and demonstrates that the Pleuraflow System is reasonably safe and effective for the intended users, uses and use environments. Any residual risk that remains after the validation testing would not be further reduced by modifications of design of the user interface (including any accessories and the IFU), is not needed, and is outweighed by the benefits that may be derived from the device's use.

The users are typically selected based on their expertise including: Anesthesiologist, cardiologist, Intensivist, PA, Nurse; their level of training; their ease of following IFU; and their experience with the device.

The most recent post-market study results regarding Human Factors study supported the positive benefits of the product as summarized below:

The responders represent a balanced cohort of clinicians and product users. They are affiliated with hospitals representing broad range of domestic hospitals. All responders are clinicians and 11.4% are physicians/surgeons. This distribution is representative of the standard of care as it relates to the use of chest tubes. For each implanting surgeon and OR personnel, who are responsible for placing the PleuraFlow System, there are a number of ICU nurses who actuate the ACT over the first 24-48 hours after surgery.

The responders provided input about training, the Instructions for Use and other training and educational material such as "Quick Reference Guide". ClearFlow, Inc. personnel trained the majority of responders (93.2%) with 15.9% of those also receiving additional internal training. 4.5% received training by internal personnel. All responders found training to be adequate for them to understand how to use the PleuraFlow System. The majority of responders (77.3%) stated that they have been using the "Quick Reference Guide" and find it easy to read. The remaining cohort of responders did not see the "Quick Reference Guide".

The responders were questioned about the product usability. Specifically, they were asked about their ability to remove the system from the sterile package without compromising sterility and without damaging the device. These activities are mostly performed in the operating room, though the Instructions for Use explain the circumstances when the ACT may be replaced in the ICU. Responders who found these questions applicable (38-43%) stated that they were able to remove the system from the sterile package without compromising sterility and without damaging the device. The remaining responders found the questions not applicable based on their interaction with the product.

All responders found the device markings legible. The majority of responders (95.4%) stated that they were able to assess drainage in the portion of the device external to the patient during use.

The majority of responders (78.6%) were satisfied with the pliability of the chest tube.

A number of questions addressed the perceived performance of the PleuraFlow System. Responders found that the device clears clots from the inside of the chest tube very easily (50%), easily (36.4%), and moderately (11.3%); Only one user found the device clearing clots from the inside to be difficult.

A part of routine maintenance of chest tubes is ensuring that these remain connected to the drainage tubes connecting the chest tube to the drainage canister and that the drainage system remains under vacuum. The great majority of users (97.7%) did not experience the Clearance Apparatus inadvertently detaching from either the chest tube or the drainage tube during use. Detachment may cause insufficient drainage with fluids retention in the chest. In the event that this happens, it will be noticed within a maximum of 15 minutes, which is the interval between actuation of the Clearance wire and loop.

Re-coupling the shuttle tube with the wire after triggering of the Magnetic Safety Release was found to be, very easy for 38.6% easy for 31.8% and moderate for 9.1%. Only one user had a difficult, but successful experience. No one reported a very difficult experience of re-coupling the shuttle tube with the wire after triggering of the Magnetic Safety Release.

Lastly the users were asked for their input about removing the device after it is no longer needed. Fifty percent (50%) of the responders had an excellent experience of removing the device, while the remaining of users had good experience. No one reported fair, poor or very poor experience.

Objective evidence from users of the PleuraFlow System demonstrates that the benefits to patients and users outweigh the residual risks. This real life, standard of care experience is a confirmation of what was originally expected and identified in the Indication For Use.

Section 22: Conclusion

HFE/UE considerations and approaches were incorporated into device design, development and risk management processes, per ISO 14971, *Medical devices – Application of risk management to medical devices,* during the original design. Hence, anticipated use-related hazards and unanticipated use-related hazards were originally identified and appropriately mitigated and adequately address the needs of the intended users and optimized the design of subject device as safe and effective for the users. The device was demonstrated to be safe and effective through validation and verification along with the feasibility study. The study protocols and results were presented as part of the original 510(k) submission.

Based on the information drawn from four years of commercial use, the original and current post-market studies, Verification and Validation, as well as the periodic risk assessments and and human factor study, it is demonstrated that the device is as safe and effective as the predicate device. The post-market study revealed newer benefits of using the device as identified in the Indication for Use.

(b)(4) Trade Secret Process- Engineering Drawing

(b)(4) Trade Secret Process- Engineering Drawing

(b)(4) Trade Secret Process- Engineering Drawing

(b)(4) Trade Secret Process- Engineering Drawing

(b)(4) Trade Secret Process- Engineering Drawing

(b)(4) Trade Secret Process- Engineering Drawing

(b)(4) Trade Secret Process- Engineering Drawing

(b)(4) Trade Secret Process- Engineering Drawing

(b)(4) Trade Secret Process- Engineering Drawing

(b)(4) Trade Secret Process- Engineering Drawing

(b)(4) Trade Secret Process- Engineering Drawing

(b)(4) Trade Secret Process- Engineering Drawing

(b)(4) Trade Secret Process- Engineering Drawing

(b)(4) Trade Secret Process- Engineering Drawing

(b)(4) Trade Secret Process- Engineering Drawing

(b)(4) Trade Secret Process- Engineering Drawing

(b)(4) Trade Secret Process- Engineering Drawing

(b)(4) Trade Secret Process- Engineering Drawing

(b)(4) Trade Secret Process- Engineering Drawing

(b)(4) Trade Secret Process- Engineering Drawing

(b)(4) Trade Secret Process- Engineering Drawing

(b)(4) Trade Secret Process- Engineering Drawing

(b)(4) Trade Secret Process- Engineering Drawing

(b)(4) Trade Secret Process- Engineering Drawing

(b)(4) Trade Secret Process- Engineering Drawing

(b)(4) Trade Secret Process- Engineering Drawing

(b)(4) Trade Secret Process- Engineering Drawing

Instructions for Use

DESCRIPTION:

The PleuraFlow® Active Clearance Technology® (ACT™) System incorporates a Clearance Apparatus intended to prevent clogging and occlusion of PleuraFlow Chest Tubes used for pleural and mediastinal drainage after cardiothoracic surgery and trauma.

The primary components of the System are the PleuraFlow Chest Tube and the PleuraFlow Clearance Apparatus. (FIG. 1) The PleuraFlow Chest Tube is a silicone chest tube. It is connected to a Clearance Apparatus, which is connected to the tubing from the drainage canister. (FIG. 3) The PleuraFlow Clearance Apparatus consists of a Guide Tube with a Clearance Wire and Loop that is advanced into the PleuraFlow Chest Tube using a magnetic Shuttle Guide. When indicated, the Clearance Wire and Loop is advanced and retracted within the PleuraFlow Chest Tube to proactively prevent or break up and clear any tube obstructions or clogging to keep the tube patent. Components of the PleuraFlow System are not made with natural rubber latex.

INDICATIONS:

The PleuraFlow System is indicated for use during open cardiothoracic surgical procedures and trauma in order to prevent/minimize chest tube occlusion and subsequent retained blood fluid and air accumulation within the operative site after closure of the surgical wound. The device is indicated for use in cardiothoracic surgical procedures. The product is indicated for adult and pediatric patients under clinical settings. The device is inserted through the skin adjacent to open surgical incision. The proximal end of the drain is positioned within the operative site prior to repair of the incision. The device's distal end is attached to an appropriate suction source in order to allow efflux of bloody, serosanguinous, chylous, purulent fluid, and/or other fluids from the operative site that could impair surgical wound healing. The device is indicated for use in cardiothoracic surgical procedures.

CONTRAINDICATIONS:

The PleuraFlow System is contraindicated for patients with a history of intolerance to implantable silicone materials.

This device should not be used in proximity to a MRI.

SET UP INSTRUCTIONS

Prior to Placement:

• Check the package for damage before opening.

To open the package:

• Open the Pouch and deliver the contents to the sterile field using aseptic technique.
• Inspect thoroughly, assuring that it is not kinked or otherwise damaged. If there is any damage, replace with a new device.

Inserting the PleuraFlow System

• Insert the PleuraFlow Chest Tube into the pleural or mediastinal space according to standard methods.

It is recommended that at least one PleuraFlow System is used in the anterior mediastinum as the majority of postoperative bleeding occurs in this location.

WARNING: The Chest Tube is not intended for direct contact with the central circulatory system.

Care should be taken to ensure the path of the PleuraFlow Chest Tube is as straight as possible to minimize the resistance of the Clearance Wire and Loop inside the Chest Tube. In some instances, excessive curvature and tortuosity may result in activating the Magnetic Safety Release.

• Secure the PleuraFlow Chest Tube according to standard methods.

• Take care not to constrict the PleuraFlow Chest Tube when securing in place, which may restrict the movement of the Clearance Wire and Loop.

• After insertion, when trimming the PleuraFlow Chest Tube, cut the Chest Tube precisely where indicated by the labeling that indicates "CUT". (FIG. 2)

• WARNING: Do not attempt to cut the PleuraFlow Chest Tube shorter than indicated by the "CUT" indicator. This could result in the Clearance Wire and Loop extending beyond the tip of the Chest Tube, which could potentially damage internal structures.

Connect the Clearance Apparatus between the PleuraFlow Chest Tube and the drainage tubing (FIG. 3)

• Once the PleuraFlow Clearance Apparatus is connected to the PleuraFlow Chest Tube, advance the external Shuttle Guide toward the proximal barb and Chest Tube. This will advance the Clearance Wire and Loop into the proximal end of the Chest Tube. (FIG. 4)

• Click the Shuttle Guide into the proximal barb housing to park the Clearance Wire and Loop in the proximal end of the Chest Tube.

• Connect the distal barb adapter of the Clearance Apparatus to the drainage tubing that goes to the drainage canister.

• Connect the drainage canister to the suction source.

- Maximum vacuum: -40 cmH_2O

• If a Y-connection is indicated, ensure the Y-junction is placed distal to the Clearance Apparatus. Additional drainage tubing may be used to compensate for length discrepancies.

POST INSERTION INSTRUCTIONS

• Confirm tip position of the PleuraFlow Chest Tube according to institution protocol. Although the PleuraFlow Chest Tube material contains a radiopaque stripe to aid in the radiographic visualization of the PleuraFlow Chest Tube, the tube clearance memberClearance Wire and Loop may be left in place to improve radiographic visualization.

USE OF THE CLEARANCE APPARATUS

• Only a qualified healthcare practitioner should operate the device.
• When it is indicated to clear the PleuraFlow Chest Tube, the Shuttle Guide is disengaged from the

proximal connector, and moved down the Clearance Apparatus, away from the patient and toward the drainage canister tubing. (FIG. 5)

• The Clearance Apparatus should be actuated often in the setting of thick output, such as clotting blood, to ensure the chest tube is patent.

- It is recommend that the device is actuated to clear the PleuraFlow Chest Tube every 15 minutes during the first 8 hours after placement when bleeding is typically more common, then every 30 minutes for the next 16 hours, then every hour thereafter.
- The device should be actuated as needed in addition to these baseline requirements.
- This should be repeated as often as necessary to keep the tube patent and free of any occlusions.

• Each time the Clearance Apparatus is actuated to clear the PleuraFlow Chest Tube; the Clearance Apparatus should be inspected for any clot or occluding material accumulating on the Clearance Wire and Loop.

- If obstructive clot is forming on the Clearance Wire and Loop, steps should be taken to dislodge the clot or fibrinous material stuck to the wire.
- If this cannot be cleared from the wire and is obstructing drainage, the Clearance Wire and Loop should be parked outside the PleuraFlow Chest Tube, in the Clearance Apparatus, by moving the Shuttle Guide to the distal portion of the Clearance Apparatus and leaving it outside of the Chest Tube.

• Traditional methods of chest tube clearance can be carried out at any time, as long as the Clearance Wire and Loop is fully retracted outside of the PleuraFlow Chest Tube.

• When not in use, the Shuttle Guide should be parked by clicking it to the proximal barb, thereby parking the Clearance Wire and Loop in the proximal end of the PleuraFlow Chest Tube. (FIG. 6)

• The Clearance Apparatus should be removed within 5 days or once the bleeding and clotting have ceased, whichever is sooner. This can be done by removing the PleuraFlow Chest Tube and the Clearance Apparatus together, if clinically indicated, or the Chest Tube can be left in place, the Clearance Apparatus removed, and the Chest Tube connected directly to the drainage tubing. The chest tube can then be left in place until removal is clinically indicated up to two weeks from insertion.

TROUBLE SHOOTING

• If obstructive clot appears on the Clearance Wire and Loop, steps should be taken to dislodge the clot into the larger diameter Guide Tube.

- Gently squeeze the wire through the PleuraFlow Chest Tube or Guide Tube while advancing the Clearance Wire and Loop to clear off clots.
- Rapidly run the wire back and forth to dislodge any clot while taking care not to squeeze the Clearance Loop.
- Flick or tap the PleuraFlow Chest Tube and Guide Tube.
- Gently tap the Shuttle Guide against the distal connector.
- If clot remains adherent to the Clearance Wire and Loop, withdraw it from the PleuraFlow Chest Tube and leave in the Guide Tube.

- If further tube clearance is needed, you may attach a new Clearance Apparatus into the existing PleuraFlow Chest Tube using standard techniques.
- If necessary, the Clearance Apparatus can be removed and the PleuraFlow Chest Tube can be connected to the drainage tubing in the standard fashion.
- Never move Clearance Wire and Loop against resistance without careful assessment of cause.
- If cause cannot be determined, move the Clearance Wire and Loop out of the PleuraFlow Chest Tube and leave it in the Guide Tube.
- Movement against resistance may result in damage to the PleuraFlow Chest Tube, which could allow the Clearance Wire and Loop to extend outside the Chest Tube.
- If the internal and external magnets become uncoupled, advance or retract the Shuttle Guide over the internal magnet to recouple. Retaining elements set on the internal magnets will keep the internal magnets and wire from exiting the Guide Tube, thus encouraging recoupling of the magnets. If after several attempts the magnets remain uncoupled, the PleuraFlow Clearance Apparatus may be disconnected from the PleuraFlow Chest Tube. The Chest Tube may then be connected to the drainage tubing and canister in the standard fashion.

PLEURAFLOW SYSTEM (CHEST TUBE AND CLEARANCE APPARATUS) REMOVAL

• Remove old dressing, sutures and/or tape.

• Grasp the PleuraFlow Chest Tube near the insertion site; using a slow, steady motion, remove the Chest Tube from the incision.

• Apply occlusive dressing after removal.

• Caution: Care should be taken during chest tube removal from the patient to avoid damaging the chest tube. Withdrawal against excessive resistance may result in chest tube damage and patient injury.

SUGGESTED PLEURAFLOW CHEST TUBE MAINTENANCE

• The PleuraFlow Chest Tube should be maintained in accordance with standard institutional protocols. Suggested PleuraFlow Chest Tube maintenance is as follows:

- Dressing Changes: Assess the dressing in the first 24 hours for accumulation of blood, fluid, or moisture beneath the dressing.
- Cleaning Exit Site: Maintain according to institution protocol.

COMPATIBILITY

• The PleuraFlow System is only compatible with PleuraFlow Chest Tubes. Compatibility with other drainage tubes has not been established.

• The PleuraFlow System is compatible with any drainage canister system.

• Refer to product label for device dimensions.

DURATION OF USE

- Maximum for PleuraFlow Chest Tube Use is 2 weeks.
- Maximum for Clearance Apparatus is 5 days.

- If the PleuraFlow Chest Tube is still needed, but the Clearance Apparatus is not, the Clearance Apparatus can be removed and discarded, and the Chest Tube left in place. The Chest Tube may then be connected to the drainage tubing and canister in the standard fashion.

WARNINGS

• Do not reuse. Discard after one use. **Caution:** The characteristics of this device have been verified for single-use ONLY. Any attempt to re-process this device for subsequent re-use may adversely affect the integrity of the device or lead to deterioration in performance.

• PleuraFlow Chest Tubes should not be clamped except when changing the drainage canister or removing the Clearance Apparatus. Withdraw the Clearance Wire and Loop prior to clamping.

• The PleuraFlow Chest Tube should not be clamped when the Clearance Wire and Loop is advanced in the Chest Tube, as this could result in damage.

• Use only the supplied PleuraFlow Chest Tube.

• Cut the PleuraFlow Chest Tube only as indicated by the "CUT" mark on the distal end. Cutting it shorter can result in the Clearance Wire and Loop extending beyond the tip of the Chest Tube. (FIG. 2)

• Never advance the Clearance Wire and Loop against resistance without careful assessment of cause. If cause cannot be determined, withdraw the Clearance Wire and Loop into the Guide Tube or replace the PleuraFlow Chest Tube. Movement against resistance may result in damage to the PleuraFlow Chest Tube, which could allow the Clearance Wire and Loop to extend outside the PleuraFlow Chest Tube.

• Dispose of the used product in accordance with accepted medical practice and applicable local, state and federal regulations. Used product presents a potential biohazard.

• Do not place the Shuttle Guide within 6 inches of an implanted pulse generator, such as pacemakers or implantable defibrillators.

• The PleuraFlow Clearance Apparatus should be removed if in proximity to an MRI.

PRECAUTIONS

• Carefully read and follow instructions prior to using this device.
• Insertion or removal of this device is only to be done by qualified health professionals.
• Follow aseptic techniques when inserting the PleuraFlow System.
• The device must be used prior to the expiration date.

COMPLICATIONS

Inserting the PleuraFlow Chest Tube and utilizing the Clearance Apparatus may result in any of the following complications:

- Pneumothorax
- Pericardial tamponade
- Infection
- Exposure to body fluids
- Empyema
- Leakage
- Hypotension subsequent to drainage
- Skin irritation or infection
- Splenic or hepatic laceration
- Re-expansion pulmonary edema
- Occlusion
- Pain
- Hemothorax
- Chest tube malposition
- Accidental chest tube dislodgement or removal
- Tumor seeding
- Chest tube erosion through skin

HOW SUPPLIED

The PleuraFlow System is provided sterile and will remain so as long as the package is unopened and undamaged. Do not resterilize.

STORAGE

Handle with care. The System should be stored in an area with good ventilation under good conditions that protect it from extremes of temperature and humidity.

CAUTION

Federal (U.S.A.) law restricts this device to sale by or on the order of a physician

FIGURES

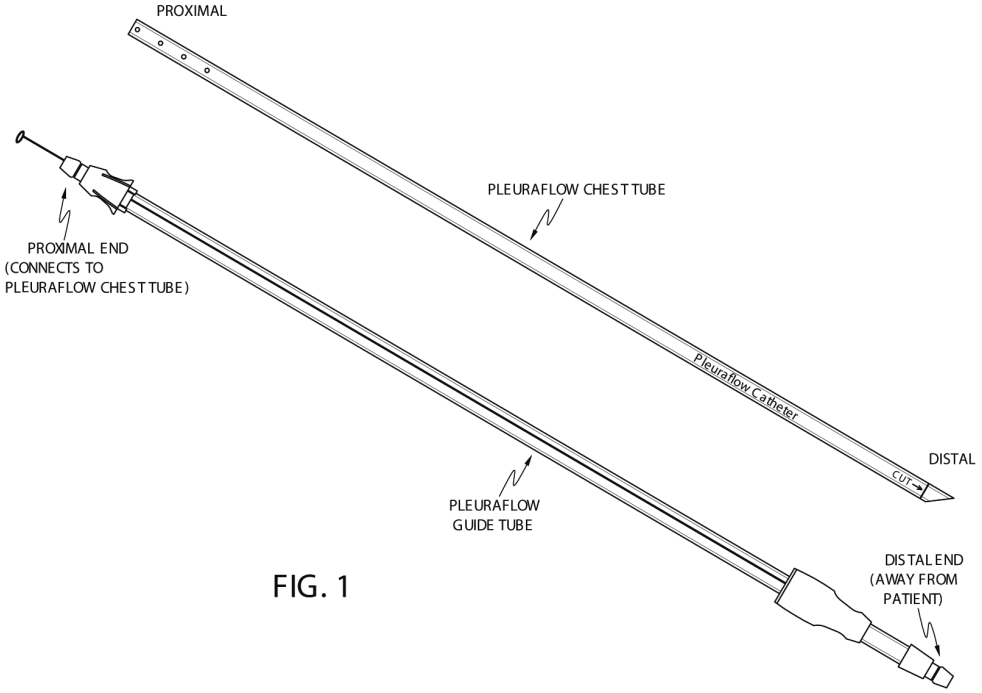

FIG. 1

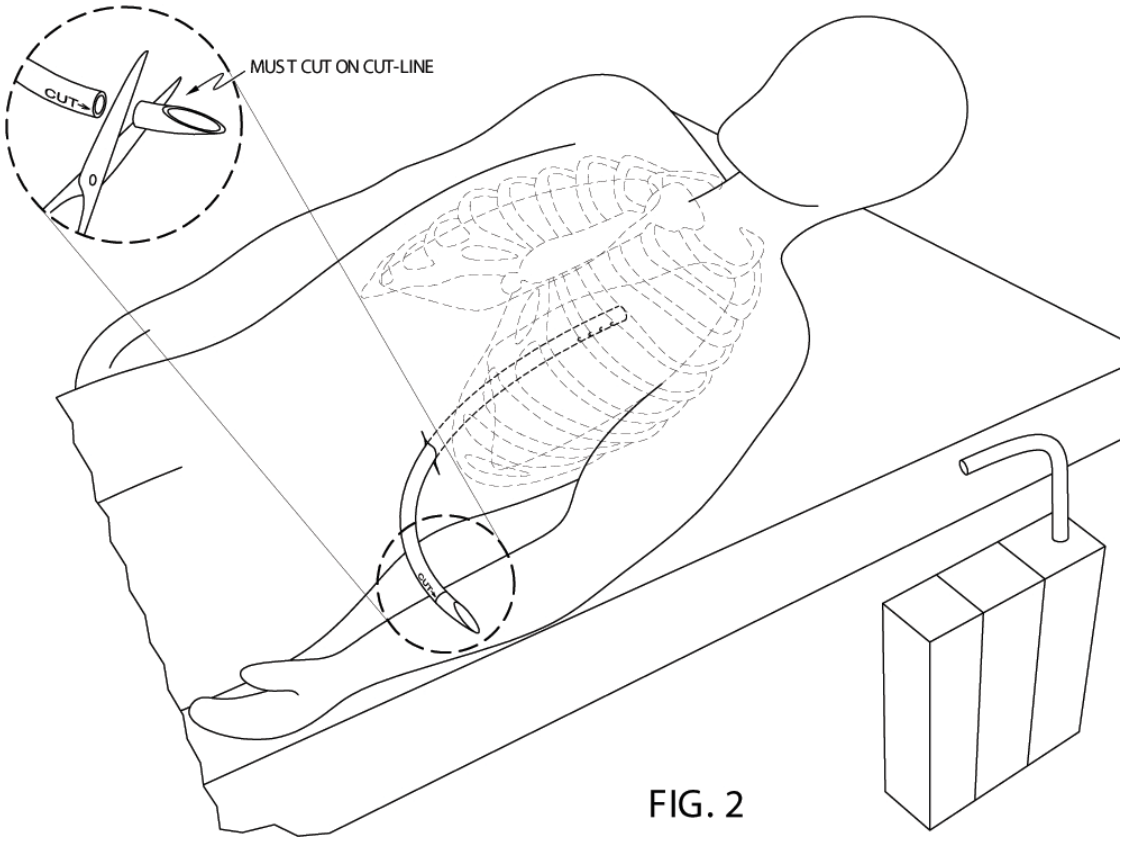

FIG. 2

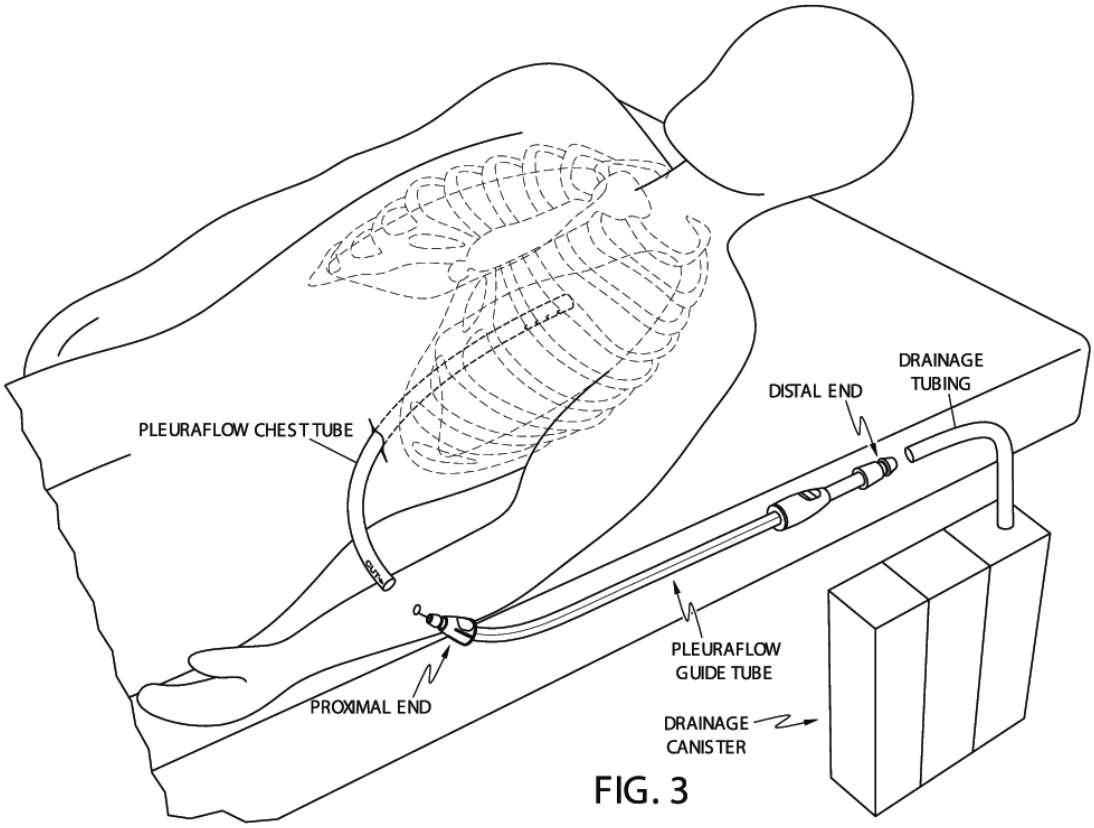
PLEURAFLOW CHEST TUBE
DISTAL END
DRAINAGE TUBING
PLEURAFLOW GUIDE TUBE
PROXIMAL END
DRAINAGE CANISTER

FIG. 3

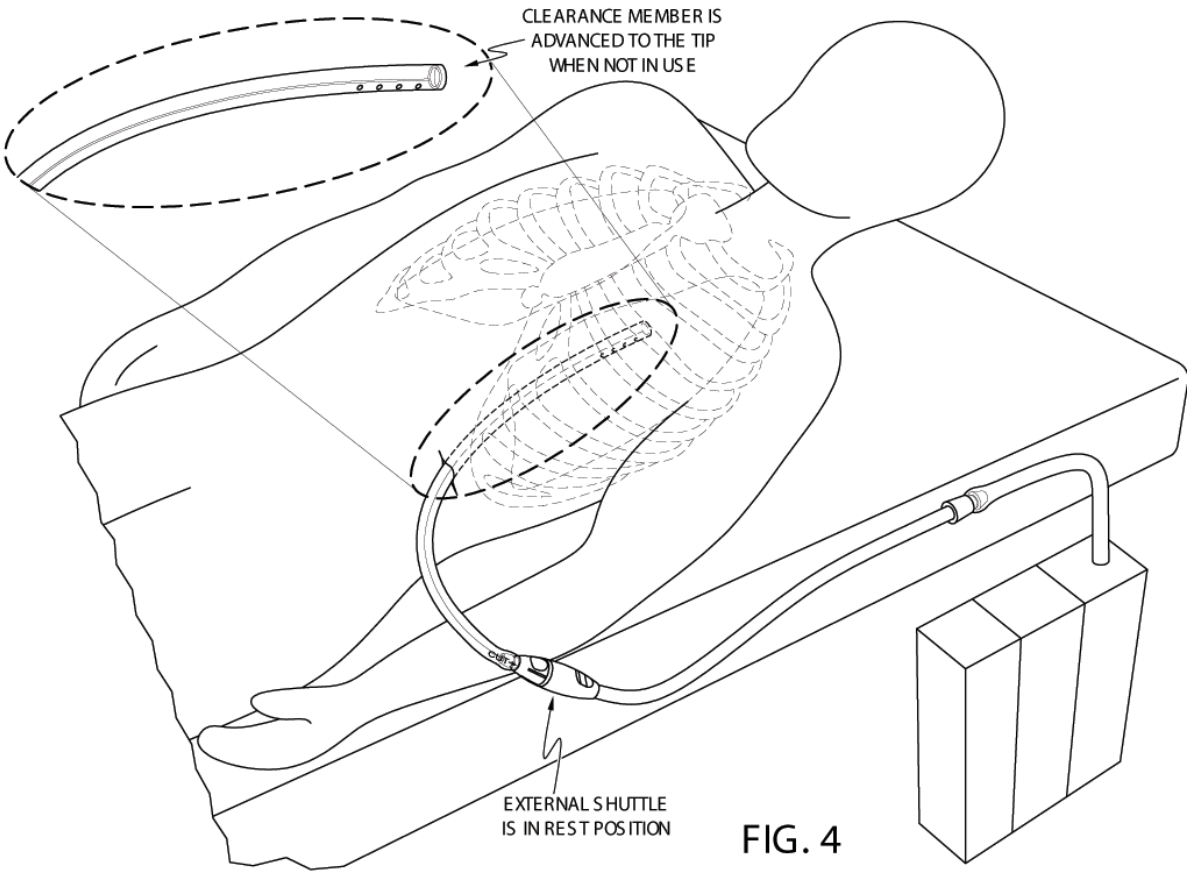
CLEARANCE MEMBER IS
ADVANCED TO THE TIP
WHEN NOT IN USE
EXTERNAL SHUTTLE
IS IN REST POSITION

FIG. 4

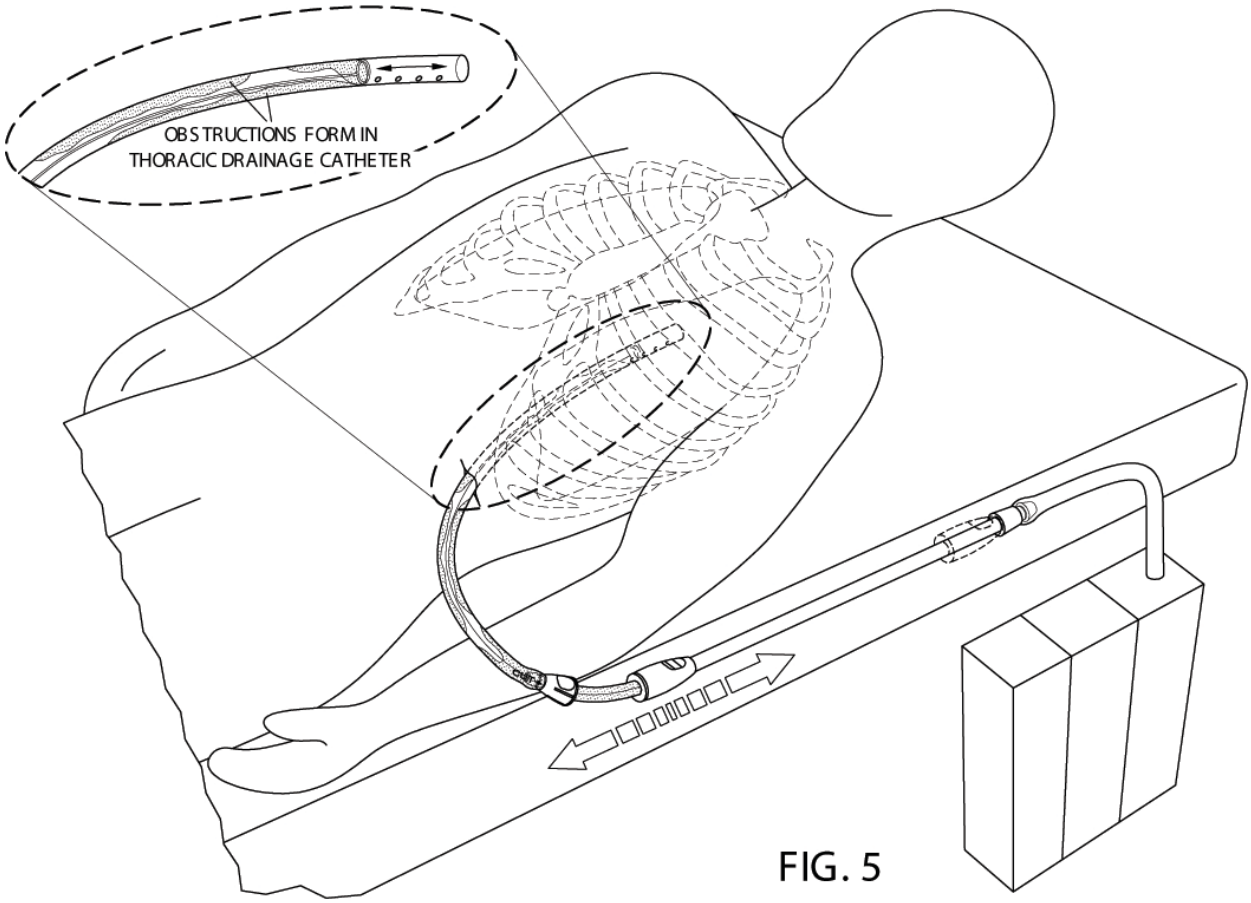

FIG. 5

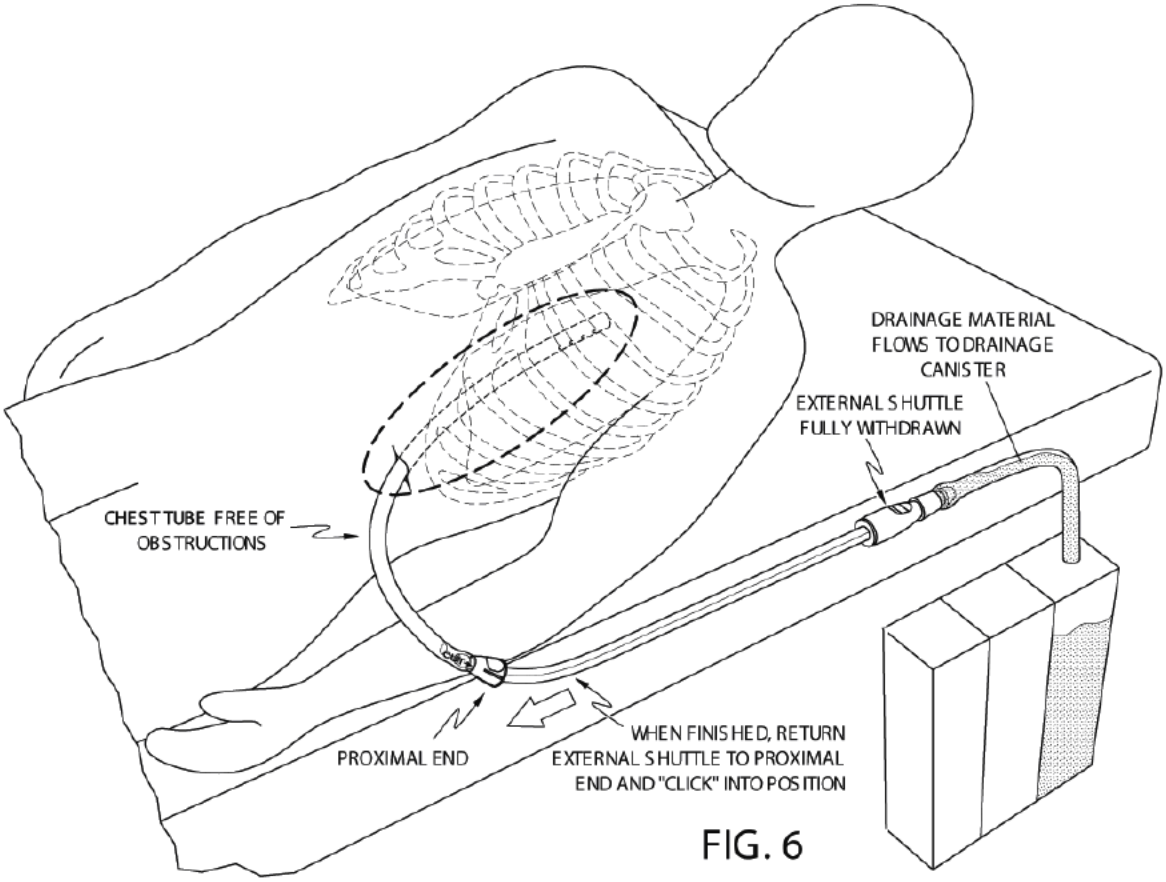
DRAINAGE MATERIAL
FLOWS TO DRAINAGE
CANISTER
EXTERNAL SHUTTLE
FULLY WITHDRAWN
CHEST TUBE FREE OF
OBSTRUCTIONS
PROXIMAL END
WHEN FINISHED, RETURN
EXTERNAL SHUTTLE TO PROXIMAL
END AND "CLICK" INTO POSITION

FIG. 6

POUCH LABEL

CLEARFLOW
ACTIVE CLEARANCE TECHNOLOGY

EN PLEURAFLOW® ACT™ SYSTEM
XXFR (Y)

LOT XXXX-XX

YYYY-MM

DE DAS PLEURAFLOW® ACT™ SYSTEM
FR LE SYSTÈME PLEURAFLOW® ACT™
IT IL SISTEMA PLEURAFLOW® ACT™
ES SISTEMA PLEURAFLOW® ACT™
PT SISTEMA PLEURAFLOW® ACT™
NL HET PLEURAFLOW® ACT™-SYSTEEM

REF PF-XX

Manufactured for:
ClearFlow, Inc.
1630 S. Sunkist St., Suite E
Anaheim, CA 92806 USA
US Toll Free (844) CLR-FLOW (257-3569)
Outside USA: +1 (714) 916-5010
support@clearflow.com
www.clearflow.com

Contents
(1) XXFR (Y) Chest Tube
(1) Clearance Apparatus (Guide Tube)

Maximum Vacuum: -40cmH2O (-3922.6Pa)
Chest Tube Cut Length: 19" (48.3cm)

STERILE EO

EC REP
European Representative:
Emergo Europe
Molenstraat 15
2513 BH, The Hague
The Netherlands

CE 0050

PL003-XX Rev E

US Patents 7,854,728, 7,951,242, 8,048,233, 8,246,752, 8,288,759, 8,702,662.
International Patents AU2004235782, CA2,427,628 CA2,565,202.
Other US and foreign patents pending.
© 2014 ClearFlow, Inc. All Rights Reserved ™Trademarks and ®Registered Trademarks of ClearFlow, Inc.
Made in USA

CASE BOX LABEL

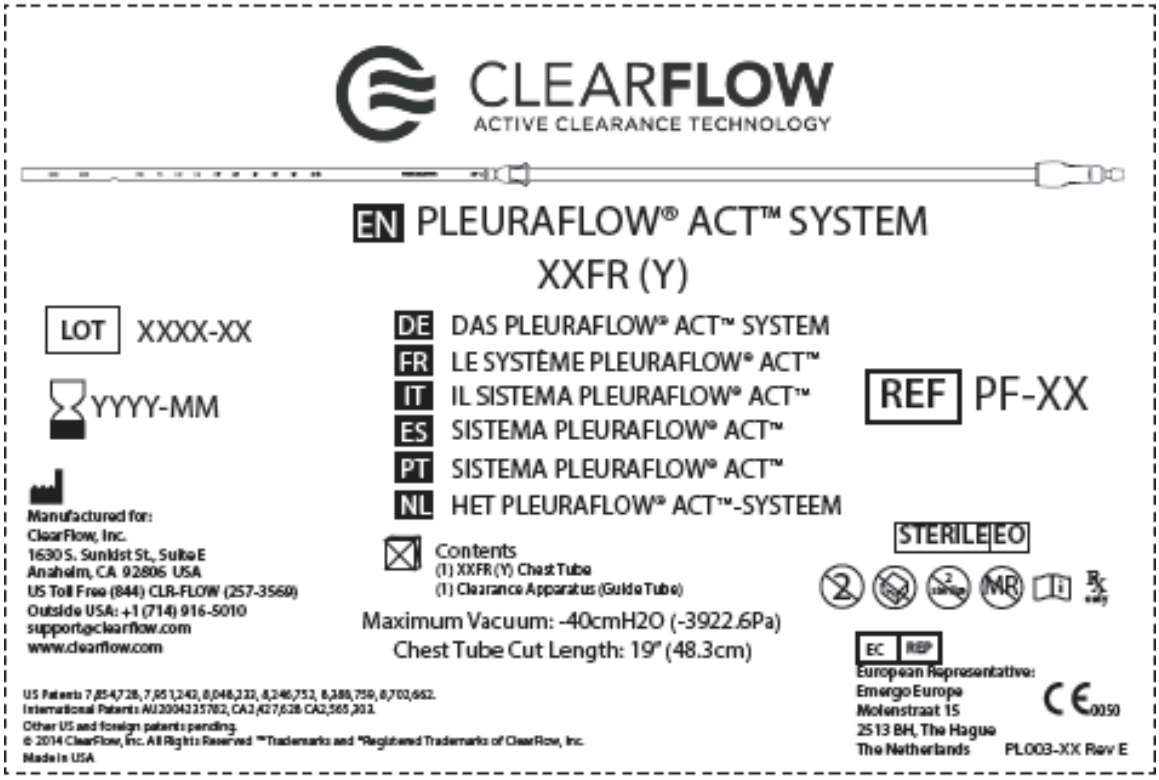

SHIPPER BOX LABEL

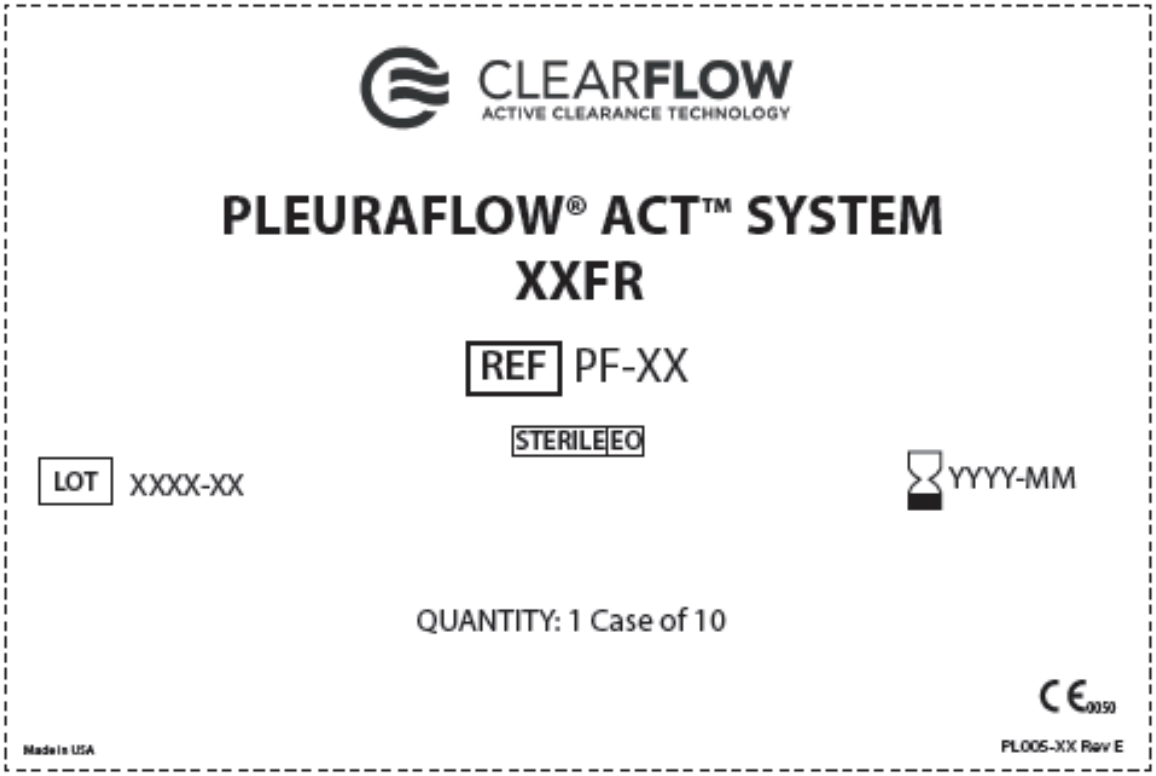

CLEARFLOW ACTIVE CLEARANCE TECHNOLOGY	Document number (b)(4) Trade Secret Process-	Rev A	Page 1 of 8
STANDARD OPERATING PROCEDURE	Title		
Confidential & Proprietary	**Test Report: 32 Month Shelf Life PleuraFlow System**		

REVISION HISTORY

Rev	DCN	Change Description	Release Date
A	N/A	Initial release.	8.13.14 DG

APPROVALS

(b)(4) Trade Secret Process- Product Specs

[redacted]

Official Documentation
Control Release

1. PURPOSE

The purpose of this report is to document testing completed to support extension of the shelf life for the PleuraFlow System product family (b)(4) Trade Secret from 24 to 32 months.

2. BACKGROUND

A product stability study, (b)(4) Trade Secret was completed at the contract manufacturer, Xeridiem, and is documented in the Technical File, (b)(4) Trade Secret and Design History File (b)(4) Trade Secret and (b)(4) Trade Secret. Testing consisted of a series of accelerated aging studies (6 months to 2 years), with concurrent real-time aging. These data were used to validate the shelf life of the product, which, at the time was targeted for two years. However, the samples that were real-time aged were stored for 32-41 months prior to testing (b)(4) Trade Secret Process- These data provide a basis for expanding the PleuraFlow System shelf life from 24 months to 32 months.

3. REFERENCE DOCUMENTS

3.1. BS EN ISO 11607-1:2009
3.2. ASTM F1886-98
3.3. ASTM F1980-07
3.4. ASTM F1929-98
3.5. ASTM F88-7a
3.6. EN 1617 (97)
3.7. (b)(4) Trade Secret Process- Product Specs
3.8. [redacted]
3.9. [redacted]

4. EQUIPMENT AND MATERIALS

4.1. TEST SAMPLES

4.1.1 (b)(4) Trade Secret Process- Product Specs
4.1.2
4.1.3

Lot #	Release date	Test Date	Aging (months)
(b)(4) Trade Secret Process- Product Specs			

4.2. Sample Size

4.2.1. (b) samples were tested representing a 95% confidence and 90 % reliability for attribute data. For packaging integrity the samples were split between dye penetration and seal strength testing. (b)(4) Trade Secret Process- Product

4.3. Equipment

4.3.1. Reference Xeridiem protocols and work instructions.

5. PROCEDURE

5.1. A review of the existing test results from (b)(4) Trade Secret was performed to determine whether the data support extension of the shelf life.

5.2. A review of packaging materials was performed to determine whether the data support extension of the shelf life.

5.3. A review of device usage and customer complaints related to shelf life was performed to determine whether the data support extension of the shelf life.

6. PROTOCOL DEVIATIONS

6.1. This report is a retrospective analysis of data from the reports indicated in section 3. As a result there is no associated protocol.

7. RESULTS

7.1. Stability and performance testing were performed according to (b)(4) Trade Secret Process- Product Specs and reported in (b)(4) Trade Secret The product attributes, test method, data analysis, and acceptance criteria are presented in Tables 1 and 2. Figure 1 shows tensile strength testing locations.

Table 1. Test methods and acceptance criteria for packaging integrity after real-time aging, reference (b)(4) Trade Secret Process-

Attribute	Test Method	Data Analysis	Acceptance Criteria
(b)(4) Trade Secret Process- Product Specs			

Table 2. Test methods and acceptance criteria for product performance after real-time aging, reference (b)(4) Trade Secret Process- Product

Attribute	Test Method	Data Analysis	Acceptance Criteria
(b)(4) Trade Secret Process- Product Specs [redacted]			

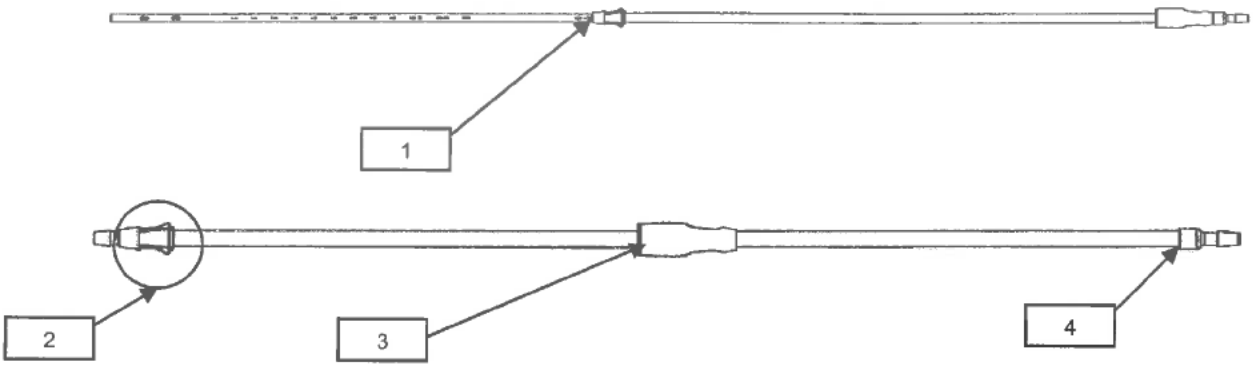

Figure 1. Locations for testing tensile strength; 1.) chest tube to barb joint, 2.) chest drain barb to shuttle guide tubing joint, 3.) shuttle assembly, 4.) drain barb to shuttle guide tube assembly.

7.2. All samples passed the tests outlined in Tables 1 and 2, except for the leak test. (b)(4) Trade Secret Process- of (b)(4) Trade passed the leak test, see section 8 of this document for an explanation of the leak test results. The results are tabulated in Tables 3 and 4. Raw data are included in Appendix A.

Table 3. Test methods and acceptance criteria for packaging integrity after real-time aging, reference (b)(4) Trade Secret Process-

Attribute	Test Method	Results
(b)(4) Trade Secret Process- Product Specs		

Table 4. Test methods and acceptance criteria for product performance after real-time aging, reference (b)(4) Trade Secret Process- Product

Attribute	Test Method	Results
(b)(4) Trade Secret Process- Product Specs		

7.3. The PleuraFlow System uses a preformed sterile barrier system, which is composed of an uncoated (b)(4) Trade Secret Process- Product Specs Dupont (b)(4) Trade Secret has been validated for a 5-year shelf life using real-time aging. The data showed that after EtO sterilization and 5 years aging the Tyvek maintains a microbial barrier, seal strength and physical integrity. An excerpt from the Dupont report[1] is attached in Appendix B.

[1] *Dupont Technical Reference Guide for Medical and Pharmaceutical Packaging*, Dupont, 2013, www.medicalpackaging.dupont.com.

7.4. The PleuraFlow sales and complaint history were reviewed. No complaints were received that can be attributed to product aging under the existing shelf life of two years.

8. DISCUSSION

All samples met the test criteria after 32 -41 months real-time aging except for the leak testing. The leak testing failures were discovered previously during time point zero and 6 and 24 month accelerated aging testing under protocol (b)(4) Trade Secret Investigation at that time revealed that the failures were not the result of aging, but due to the adhesive assembly method of the guide tube and chest barb. A modification to the assembly method was qualified under operational qualification (b)(4) Trade Secret As part of that study (b)(4) samples were assembled and tested. Fifteen of the samples underwent 3-year accelerated aging and were re-tested. All samples tested for leakage under (b)(4) Trade Secret Process Product passed. In addition the barb to shuttle guide tube joint where the leak occurred was later redesigned to improve the assembly. That change was released under (b)(4) Trade Secret Process and qualified under Xeridiem development project (b)(4) Trade Secret

The data summarized in this report were gleaned from testing of part numbers (b)(4) Trade Secret Process and (b)(4) Trade Secret these were the initial configurations of the PleuraFlow System that were released. The PleuraFlow System product family was modified and expanded under project (b)(4) Trade which added the 24 and 28F versions as well as design modifications to the barbs to improve shuttle guide tube assembly. There were no changes to the sterile barrier packaging and sterilization method. The modification and additions were qualified under (b)(4) and it was determined the resulting product family, (b)(4) Trade is covered by the original shelf life testing under (b)(4) Trade Secret and subsequent reports. The data presented under this report is also applicable to those part numbers.

The data summarized under this report demonstrate stability of the packaging and device performance for 32 – 41 months shelf life.

9. CONCLUSION

Based on the data outlined in this report, the shelf life of the PleuraFlow System product family, (b)(4) Trade Secret can be increased from 24 months to 32 months.

APPENDIX A

(b)(4) Trade Secret Process- Product Specs [redacted]

(b)(4) Trade Secret Process- Testing

[redacted]

(b)(4) Trade Secret Process- Testing

[redacted]

(b)(4) Trade Secret Process- Testing

[redacted]

(b)(4) Trade Secret Process- Testing

[redacted]

(b)(4) Trade Secret Process- Testing

[redacted]

(b)(4) Trade Secret Process- Testing

[redacted]

(b)(4) Trade Secret Process- Testing

[redacted]

(b)(4) Trade Secret Process- Testing

[redacted]

(b)(4) Trade Secret Process- Testing

[redacted]

(b)(4) Trade Secret Process- Testing

[redacted]

APPENDIX B

(b)(4) Trade Secret Process- Testing

[redacted]

PERFORMANCE OF DUPONT™ TYVEK® AFTER AGING

4. Tyvek® is inspected for possible bacteria growth

The final part of the test procedure determined that the packages were indeed challenged with the bacterial spores on the outside of the lid of DuPont™ Tyvek®. A small swatch of Tyvek® from the package lid was cut out and placed on an agar medium. After evidence of bacteria growth, the swatches were examined under a microscope and colonies of *B. circulans* were counted. This acted as a check for the number of viable spores that were actually on the surface of Tyvek®. It also ensured that the density of spores was consistently maintained over the many years of the test.

Physical properties after aging

Tyvek® retains its physical properties over time, allowing a package to maintain integrity. The data shown in Tables XI through XVI are for uncoated samples of Tyvek®. It is important to note that any downstream operations, such as coatings applied by sterile packaging manufacturers (SPMs), may affect the properties.

Table XI shows the physical properties before and after five-year real-time aging of Tyvek® 1073B and Tyvek® 1059B sterilized by ethylene oxide (EO). Tyvek® 1073B is the reference product providing the highest level of protection for all demanding applications and Tyvek® 1059B is the product providing robust protection for medium-risk applications.

Table XI. Physical properties of DuPont™ Tyvek® sterilized by ethylene oxide (EO) before and after five-year real-time aging

			DuPont™ Tyvek® 1073B		DuPont™ Tyvek® 1059B	
Property	Test Method	Units	Initial	After 5 Years	Initial	After 5 Years
Delamination	ASTM D2724	lbf/in. (N/2.54 cm)	0.47 (2)	0.44 (2)	0.45 (2)	0.49 (2)
Gurley Hill Porosity	TAPPI T460 ISO 5636-5	sec/100 cc	37	37	30	28
Microbial Barrier	Internal DuPont	Log Reduction Value (LRV)	5.2[1]	unchanged	4.7[1]	unchanged
Hydrostatic Head	AATCC TM 127 EN 20811[2]	in. H_2O (cm H_2O)	59+ (150+)	59+ (150+)	59+ (150+)	59+ (150+)
Tensile Strength, MD	ASTM D5035[3] EN ISO 1924-2[3]	lbf/in. (N/2.54 cm)	44.0 (196)	45.1 (201)	36.7 (163)	35.9 (160)
Seal Strength	4	lbf/in. (N/2.54 cm)	1.53 (7)	1.57 (7)	1.33 (6)	1.44 (6)

1. Typical values. ASTM F1608 Standard did not exist so barrier was tested by internal DuPont method similar to the current Standard. Property remained unchanged after five years.
2. Rate of use: 60 cm H_2O/min.
3. Modified for speed and gauge length.
4. Sealing conditions: temperature—290°F (143°C); dwell time—1 second; pressure (seal through the film)—90 psi (621 kPa).

List of References

1. Shalli S., Boyle E.M., Saeed D., Fukamachi K., Chen W.E., Gillnov A.M. The Active Tube Clearance System: A novel Bed Side Chest Tube Clearance Device. *Innovations* 2010, Vol. 5:42-47.
2. Karimov, J.H., Gillinov, A. M., Schenck, L., Cook, M., Kosty Sweeney, D., Boyle, E.M., Fukamachi, K. . 2013. Incidence of chest tube clogging after cardiac surgery: A single-center prospective observational study. *Eur J Cardiothorac Surg* 2013 Dec;44(6):1029-36.
3. Day, T.G., Perring, R.R., and Gofton, K. Is manipulation of mediastinal chest drains useful or harmful after cardiac surgery? *Interact Cardiovasc Thorac Surg.* 2008; 7:888-890.
4. Halm, M.A. To strip or not to strip? Physiological effects of chest tube manipulation. *Am J Crit Care.* 2007; 16:609-612.
5. Boyacioglu, K., Kalender, M., Ozkaynak, B., Mert, B., Kayalar, N., and Erentug, V. A new use of fogarty catheter: chest tube clearance. *Heart Lung Circ.* 2014; 23:e229-230.
6. Halejian, B.A., Badach, M.J., and Trilles, F. Maintaining chest tube patency. *Surg Gynecol Obstet*. 1988; 167:521.
7. LaPar D.J., Speir A.M., Crosby I.K., Fonner E. Jr, Brown M., Rich J.B., Quader M., Kern J.A., Kron I.L., Ailawadi G.; Investigators for the Virginia Cardiac Surgery Quality Initiative. Postoperative atrial fibrillation significantly increases mortality, hospital readmission, and hospital costs. Ann *Thorac Surg*. 2014 Aug;98(2):527-33.
8. Mitchell, L.B., and Committee, C.C.S.A.F.G. Canadian Cardiovascular Society atrial fibrillation guidelines 2010: prevention and treatment of atrial fibrillation following cardiac surgery. *Can J Cardiol.* 2011; 27:91-97.
9. Tokmaji, G., McClure, R.S., Kaneko, T., and Aranki, S.F. Management strategies in cardiac surgery for postoperative atrial fibrillation: contemporary prophylaxis and futuristic anticoagulant possibilities. *Cardiol Res Pract.* 2013; 637482.
10. Biancari, F., and Mahar, M.A. Meta-analysis of randomized trials on the efficacy of posterior pericardiotomy in preventing atrial fibrillation after coronary artery bypass surgery. *J Thorac Cardiovasc Surg.* 2010; 139:1158-1161.
11. Farsak, B., Gunaydin, S., Tokmakoglu, H., Kandemir, O., Yorgancioglu, C., and Zorlutuna, Y. Posterior pericardiotomy reduces the incidence of supra-ventricular arrhythmias and pericardial effusion after coronary artery bypass grafting. *Eur J Cardiothorac Surg.* 2002; 22:278-281.

REVISION HISTORY

Rev	Change Description	Release Date
A	Initial Release	1/6/14

Risk Management Report
PleuraFlow System (20FR – 32FR) & Chest Tubes (20FR – 32FR)

Approval:

(b)(4) Trade Secret Process- Testing

[redacted]

1. Background:

This report is a summary of the risk management activities completed in accordance with (b)(4) Trade and the Risk Management Plan, (b)(4) Trade Secret The plan was executed to review and update the existing Risk Management File (b)(4) Trade which was (b)(4) Trade Secret Process- Testing [redacted]

2. Risk Control:

(b)(4) Trade Secret Process- Testing [redacted]

Control Measures were applied to reduce each risk and the overall risk as far as possible. All control measures and risk mitigation actions that were implemented previously, either during design or post-production, have been incorporated into the baseline risk evaluation documented in (b)(4) Trade Secret Process- Testing [redacted]

The risks were prioritized in accordance with (b)(4) Trade Secret Process- Testing [redacted] (b)(4) Trade Each risk was reviewed by the team and recommended actions recorded under (b)(4) Trade. No new risk control measures were implemented during this review.

3. Residual Risk:

A Summary of residual risks for the 214 identified failure modes are presented in Table 1, a detail summary is reported in the FMEA Summary document, RK002-06. Indications, contraindications, warnings, cautions, and instructions are contained in the Instructions for Use (IFU) and training material, to communicate the residual risk to the user. The information to the user was not used to reduce the residual risk, it was used to inform the user of residual risk. An action item to update

training material based on (b)(4) Trade Secret Process- Testing [redacted]

(b)(4) Trade Secret Process- Testing

Table 1. (b)(4) Trade Secret Process- Testing [redacted]

(b)(4) Trade Secret Process- Product Specs
[redacted]

4. Risk/Benefit Analysis:

A Risk-Benefit Analysis, (b)(4) Trade Secret was conducted to balance each residual risk and the overall residual risk with the benefit of the PleuraFlow System and PleuraFlow Chest Tubes to the patient. The residual risks and overall residual risk were found to be acceptable when balanced with the medical benefits to the patient.

5. Risks Arising from Risk Control Measures:

No new risks were identified as a result of implementation if risk control measures.

6. Completeness of Risk Evaluation:

Each identified hazard was included in the analysis and the identified control measures were included in the design and process.

7. Verification of Effectiveness:

(b)(4) Trade Secret Process- Product Specs
(b)(4) Trade Secret Process- Product Specs The risk control measures were found to be effective.

8. Conclusion:

The risk management plan (b)(4) Trade Secret was executed in accordance with (b)(4) Trade and (b)(4) Trade There were no deviations. The Risk Management File is a living document and will be reviewed on an ongoing basis, per the plan, until the product is decommissioned. Systematic review of production and post-production data will be conducted on an ongoing basis per (b)(4) Trade and (b)(4) Trade and reviewed at least (b)(4) Trade Secret

K150042/S1

U.S. Food and Drug Administration

Center for Devices and Radiological Health

Document Control Center - WO66-G609

10903 New Hampshire Avenue

Silver Spring, MD 20993-0002

FDA CDRH DMC
APR 20 2015
Received

April 14, 2015

Re: K150042- ClearFlow, Inc. PleuraFlow® System Response to Deficiencies listed in letter dated February 25, 2015.

Attention: Dr. Thomas E. Claiborne, Ph.D.

Dear Dr. Claiborne,

ClearFlow, Inc. is providing the enclosed information addressing FDA's request for additional information regarding K150042 in an email dated February 25, 2015.

Per the instructions accessed at http://www.fda.gov/cdrh/elecsub.html, an electronic copy is being provided with this submission and it is an exact duplicate of the original paper submission.

This submission contains methods, data, and analysis of these data, which the Sponsor considers "Trade Secret", commercially privileged and confidential. In accordance with 21 CFR §20.61, this information may not be disclosed to the public in accordance with Freedom of Information (FOI) Act.

On behalf of ClearFlow, Inc. I would like to thank the FDA staff and you for the time and assistance you have provided through the initial review of this application. I am the official contact person for this submission. Please contact me if with questions. My contact information is below my signature.

Sincerely,

Dov Gal

Dov Gal, DVM, MBA

ClearFlow, Inc.

1630 S. Sunkist t. Suite E

97

Anaheim CA 92806

Ph: 714.916.5014

Fax: 714.916.5019

Email: dgal@clearflow.com

Official Correspondent for ClearFlow, Inc.

FDA CDRH DMC
APR 17 2015
Received

CLEARFLOW
ACTIVE CLEARANCE TECHNOLOGY

K150042/S1

U.S. Food and Drug Administration

Center for Devices and Radiological Health

Document Control Center - WO66-G609

10903 New Hampshire Avenue

Silver Spring, MD 20993-0002

April 14, 2015

Re: K150042- ClearFlow, Inc. PleuraFlow® System Response to Deficiencies listed in letter dated February 25, 2015.

Attention: Dr. Thomas E. Claiborne, Ph.D.

Dear Dr. Claiborne,

ClearFlow, Inc. is providing the enclosed information addressing FDA's request for additional information regarding K150042 in an email dated February 25, 2015.

Per the instructions accessed at http://www.fda.gov/cdrh/elecsub.html, an electronic copy is being provided with this submission and it is an exact duplicate of the original paper submission.

This submission contains methods, data, and analysis of these data, which the Sponsor considers "Trade Secret", commercially privileged and confidential. In accordance with 21 CFR §20.61, this information may not be disclosed to the public in accordance with Freedom of Information (FOI) Act.

On behalf of ClearFlow, Inc. I would like to thank the FDA staff and you for the time and assistance you have provided through the initial review of this application. I am the official contact person for this submission. Please contact me if with questions. My contact information is below my signature.

Sincerely,

Dov Gal

Dov Gal, DVM, MBA

ClearFlow, Inc.

1630 S. Sunkist t. Suite E

Anaheim CA 92806

Ph: 714.916.5014

Fax: 714.916.5019

Email: dgal@clearflow.com

Official Correspondent for ClearFlow, Inc.

U.S. Food and Drug Administration

Center for Devices and Radiological Health

Document Control Center - WO66-G609

10903 New Hampshire Avenue

Silver Spring, MD 20993-0002

April 14, 2015

Re: K150042- ClearFlow, Inc. PleuraFlow® System Response to Deficiencies listed in letter dated February 25, 2015.

Attention: Dr. Thomas E. Claiborne, Ph.D.

Dear Dr. Claiborne,

ClearFlow, Inc. is providing the enclosed information addressing FDA's request for additional information regarding K150042 in an email dated February 25, 2015.

Per the instructions accessed at http://www.fda.gov/cdrh/elecsub.html, an electronic copy is being provided with this submission and it is an exact duplicate of the original paper submission.

This submission contains methods, data, and analysis of these data, which the Sponsor considers "Trade Secret", commercially privileged and confidential. In accordance with 21 CFR §20.61, this information may not be disclosed to the public in accordance with Freedom of Information (FOI) Act.

On behalf of ClearFlow, Inc. I would like to thank the FDA staff and you for the time and assistance you have provided through the initial review of this application. I am the official contact person for this submission. Please contact me if with questions. My contact information is below my signature.

Sincerely,

Dov Gal

Dov Gal, DVM, MBA

ClearFlow, Inc.

1630 S. Sunkist t. Suite E

Anaheim CA 92806

Ph: 714.916.5014

Fax: 714.916.5019

Email: dgal@clearflow.com

Official Correspondent for ClearFlow, Inc.

Device Description

(b)(4) Trade Secret Process- Product Specs

[redacted]

ANGLE:

(b)(4) Trade Secret Process- Product Specs

MATERIAL:

(b)(4) Trade Secret Process- Product Specs

(b)(4) Trade Secret Process- Product Spec			

(b)(4) Trade Secret Process- Product Specs

(b)(4) Trade Secret Process- Product Specs [redacted]

(b)	[redacted]	[redacted]	To improve assembly process and making the assembly process more efficient and increase the yield

(b)(4) Trade Secret Process- Product Specs [redacted]

(b)(4) Trade Secret Process- Product Specs

[redacted]

(b)(4) Trade Secret Process- Product Specs

[redacted]

(b)(4) Trade Secret Process- Product Specs

[redacted]

(b)(4) Trade Secret Process- Product Specs

Performance Testing

(b)(4) Trade Secret Process- Product Specs

(b)(4) Trade Secret Process- Product Specs

[redacted]

(b)(4) Trade Secret Process- Product Specs

[redacted]

(b)(4) Trade Secret Process- Product Specs

(b)(4) Trade Secret Process- Product Specs

[redacted]

(b)(4) Trade Secret Process- Product Specs

[redacted]

(b)(4) Trade Secret Process- Product Specs

[redacted]

(b)(4) Trade Secret Process- Product Specs

(b)(4) Trade Secret Process- Product Specs

[redacted]

(b)(4) Trade Secret Process- Product Specs

(b)(4) Trade Secret Process- Product Specs

[redacted]

(b)(4) Trade Secret Process- Product Specs

(b)(4) Trade Secret Process- Product Specs

ATTACHMENTS

1. Drawing (b)(4) Trade Secret Process- Product Specs and Drawing (b)(4) Trade Secret Process- Product Specs released (b)(4) Trade (Attachments 1a and 1b).

2. Figure 2 with an actual photograph of the Wire Loop

3. Original submission attachment (Appendix 15-1) for the information regarding the wire loop angle

4. Residual testing dated Sep (b)(4) Trade

5. Study protocol (English translated)(5a) and Statistical methodology(5b); Study protocol(original language, German)(5c) and Statistical methodology (original language, German) (5d)

6. Post Market Human Factors and Usability protocol (6a) and Report (6b)

7. (b)(4) Trade Secret Process- Product Specs

8. Marketing brochure; Atrium for pediatric application

9. Revised 510(k) application to reflect the correct identification of clearance loop angle and patient population as advised by the reviewer.

(b)(4) Trade Secret Process- Engineering Drawing

[redacted]

(b)(4) Trade Secret Process- Engineering Drawing

[redacted]

Figure 2– Photograph of the PleuraFlow System Clearance Wire and Loop

(b)(4) Trade Secret Process- Product Specs

[redacted]

(b)(4) Trade Secret Process- Testing

[redacted]

Ethylene Oxide Residuals Report

(b)(4) Trade Secret Process- Testing

[redacted]

Comments: None

(b)(4) Trade Secret Process- Testing

[redacted]

This report may not be reproduced except in full without written approval from Centurion Sterilization Services. Results apply only to samples tested.

(b)(4) Trade Secret Process- Testing

[redacted]

Ethics Committee application

Applicant	Prof. Dr. med. Theodor Fischlein, Chief Physician Klinikum Nurnberg Clinic for Heart Surgery (Clinic aid) Breslauer Strasse 201 90471 Nuremberg Telephone: +49 (0)911 398-5440 and 5441 Fax: +49 (0)911 398-5443 theodor.fischlein@klinikum-nuernberg.de
Title of the research project	**ACT Nurnberg Study** Prevention of Retained-Blood Outcomes with Active Clearance Technology
Education and trial experience	Please see Prof. T. Fischlein's CV
With multicenter studies	Non-relevant (Single Center)
With study-related radiation exposure	Non-relevant (since no radiation exposure)

Ethics Committee application:
(b)(4) Trade [redacted]

Study protocol

Scientific information about the research project

(b)(4) Trade Secret Process-[redacted]
Testing

[redacted]

[redacted]

[redacted]

[redacted]

[redacted]

[redacted]

[redacted]

[redacted]

[redacted]

[redacted]

[redacted]

[redacted]

Type of study

(b)(4) Trade Secret Process- Testing

Ethics Committee application:

(b)(4) Trade Secret Process-Testing [redacted]

[redacted]

[redacted]	[redacted]	[redacted]	[redacted]	[redacted]
[redacted]	[redacted]	[redacted]	[redacted]	[redacted]
[redacted]	[redacted]	[redacted]	[redacted]	[redacted]

[redacted]

[redacted]

[redacted]

Result parameters

Primary result

The incidence of RBC that is defined as summarized end point of specific postoperative interventions and diagnoses. This end point will be measured in the base group and compared with the value in the intervention group during which PleuraFlow ACT is used. Every patient that has an entry in the QIMS databank of one of the following postoperative interventions or diagnoses has RBC.

Interventions

- Re-surgery after bleeding, tamponade or washing out of retained blood
- Pericardial window
- Insertion/replacement of a thoracic drainage catheter
- Pericardial puncture (Pericardiocentesis)
- Insertion of a pericardial drainage catheter
- Thoracotomy
- Thoracoscopy
- Pleural puncture (Thoracentesis)

Diagnoses
- Pleural effusion
- Pericardial effusion
- Hemothorax
- Pneumothorax
- Pericardial tamponade

Secondary result

- Relevant pre- and postoperative result parameters

Execution and methodology

The device will be used according to the operating instructions (see the attachment). The clinical execution will be performed in the Center according to the clinical protocol developed together with the manufacturer (see the attachment).

Financing

(b)(4) Trade Secret Process- Testing [redacted]

Remuneration

(b)(4) Trade Secret Process- Testing [redacted]

Discussion of relevant ethical-legal problems

Non-relevant, since no randomization, blinding or placebo use / controlled non-administration has been planned.

Capacity for consent

Emergency patients and underage patients are excluded from the study.

Research on underage persons

Not relevant, since the use of underage persons has been excluded.

Data protection

The data are downloaded completely pseudonymized from the QIMS databank for plausibility reasons and are subsequently anonymously analyzed statistically. The data will be handled confidentially.

Insurance

Non-relevant, since this is an approved medicinal product that poses no additional stress on the patient.

Declaration that the basic principles of the Declaration of Helsinki have been observed

We have complied with the current version of the Declaration of Helsinki.

Bibliography

1. Wynne, R., Botti, M., Copley, D., and Bailey, M. 2007. The normative distribution of chest tube drainage volume after coronary artery bypass grafting. *Heart Lung* 36:35-42.

2. Christensen, M.C., Dziewior, F., Kempel, A., and von Heymann, C. 2012. Increased chest tube drainage is independently associated with adverse outcome after cardiac surgery. *J Cardiothorac Vasc Anesth* 26:4651.

3. Dixon, B., Santamaria, J.D., Reid, D., Collins, M., Rechnitzer, T., Newcomb, A.E., Nixon, I., Yii, M., Rosalion, A., and Campbell, D.J. 2012. The association of blood transfusion with mortality after cardiac surgery: cause or confounding? *Transfusion* 2013 Jan;53(1):19-27

4 Boyle, E., AM., G., Cohn, W., Sakwa, M., Reddy, V., and Perrault, L. 2013. The Post Operative Retained Blood Complex: Implications for Patient Recovery After Heart Surgery. *Manuscript in Preparation*

5. Light, R.W. 2001. Pleural effusions following cardiac injury and coronary artery bypass graft surgery. *Semin Respir Crit Care Med* 22:657-664.

6. Light, R.W. 2002. Pleural effusions after coronary artery bypass graft surgery. *Curr Opin Pulm Med* 8:308311.

7. Light, R.W., Rogers, J.T., Cheng, D., and Rodriguez, R.M. 1999. Large pleural effusions occurring after coronary artery bypass grafting. Cardiovascular Surgery Associates, PC. *Ann Intern Med* 130:891-896.

8. Light, R.W., Rogers, J.T., Moyers, J.P., Lee, Y.C., Rodriguez, R.M., Alford, W.C., Jr., Ball, S.K., Burrus, G.R., Coltharp, W.H., Glassford, D.M., Jr., et al. 2002. Prevalence and clinical course of pleural effusions at 30 days after coronary artery and cardiac surgery. *Am J Respir Crit Care Med* 166:1567-1571.

9. Ikaheimo, M.J., Huikuri, Airaksinen, K.E., Korhonen, U.R., Linnaluoto, M.K., Tarkka, M.R., and Takkunen, J.T. 1988. Pericardial effusion after cardiac surgery: incidence, relation to the type of surgery, antithrombotic therapy, and early coronary bypass graft patency. *Am Heart* J 116:97-102

10. Clark, G., Licker, M., Bertin, D., and Spiliopoulos, A. 2007. Small size new silastic drains: life-threatening hypovolemic shock after thoracic surgery associated with a non-functioning chest tube. *Eur J Cardiothorac Surg* 31:566-568.

11. Karimov, J.H., Gillinov, A. M., Schenck, L, Cook, M., Kosty Sweeney, D., Boyle, E.M., Fukamachi, K.. 2013. Incidence of chest tube clogging after cardiac surgery: A single-center prospective observational study. *Eur J Cardiothorac Surg* In Press.

12. Shalli 5, Boyle EM, Saeed D, Fukamachi K, Chhn WE, Gillnov AM The Active Tube Clearance System: A novel Bed Side Chest Tube Clearance Device. 2010, *Innovations* Vol. 5:42-47

13. Shiose A, Takaseya T, Fumoto H, Aralawa Y, Horai T, Boyle E, Gillinov A, Fukamachi K. Improved Drainage with Active Tube Clearance. 2010, *CardioVasc Thorac Surg* Vol. 10:685-688

14. Arakawa Y, Shiose A, Takaseya T, Fumoto H, Kim H, Boyle E, Gillinov A, Fukamachi K Superior Chest Drainage with an Active Tube Clearance System: Evaluation of a Downsized Chest Tube. 2011, *Annals of Thoracic Surgery* Vol. 91:580-583.

15. World Medical Association's (WMA's) Declaration of Helsinki Ethical Principles for Medical Research Involving Human Subjects http://jama.jamanetwork.com/ on 10/21/2013.

(b)(4) Trade [redacted]

(b)(4) [redacted]
Trade
Secret [redacted]
Proces
s- [redacted]
Testing [redacted]

[redacted]

[redacted]

[redacted]

Ethics Committee application:

(b)(4) Trade Secret Process- Testing

[redacted]

- ICU Times
  - (Calculate total ICU hours)

(b)(4) Trade Secret Process- Testing

[redacted]

Ethics Committee application:

(b)(4) Trade Secret Process-Testing

[redacted]

Statistical methodology

(b)(4) Trade Secret Process- Testing

[redacted]

(b)(4) Trade Secret Process- Testing

[redacted]

Ethik-Kommissionsantrag

Antragsteller	Prof. Dr. med. Theodor Fischlein Chefarzt Klinikum Nürnberg Klinik für Herzchirurgie (Klinikum Süd) Breslauer Straße 201 90471 Nürnberg Telefon: +49 (0)911 398-5440 und 5441 Fax: +49 (0)911 398-5443 theodor.fischlein@klinikum-nuernberg.de
Titel des Forschungsvorhabens	**ACT Nürnberg Studie** Prävention von „Blut-Rückstau“-Komplikationen durch ACT-Technologie (Englisch: Prevention of Retained-Blood Outcomes with Active Clearance Technology)
Ausbildungsdaten und Prüferfahrung	Siehe Lebenslauf Prof. T. Fischlein
Bei Multicenterstudien	Nicht relevant (Single-Center)
Bei studienbedingten Strahlenbelastungen	Nicht relevant (da keine Strahlenbelastungen)

Studienplan

(b)(4) Trade Secret Process- Testing

[redacted]

(b)(4) Trade Secret Process- Testing [redacted]

[redacted]

[redacted]	[redacted]	[redacted]	[redacted]	[redacted]
[redacted]	[redacted]	[redacted]	[redacted]	[redacted]
[redacted]	[redacted]	[redacted]	[redacted]	[redacted]

[redacted]

(b)(4) Trade Secret
Process- Testing

[redacted]

[redacted]

[redacted]

- [redacted]
- [redacted]
- [redacted]
- [redacted]
- [redacted]
- [redacted]
- [redacted]
- [redacted]

[redacted]

- [redacted]
- [redacted]
- [redacted]
- [redacted]
- [redacted]

[redacted]

- [redacted]

[redacted]

[redacted]

Finanzierung

(b)(4) Trade Secret Process- Testing

[redacted]

Literatur

1. Wynne, R., Botti, M., Copley, D., and Bailey, M. 2007. The normative distribution of chest tube drainage volume after coronary artery bypass grafting. *Heart Lung* 36:35-42.

2. Christensen, M.C., Dziewior, F., Kempel, A., and von Heymann, C. 2012. Increased chest tube drainage is independently associated with adverse outcome after cardiac surgery. *J Cardiothorac Vasc Anesth* 26:46-51.

3. Dixon, B., Santamaria, J.D., Reid, D., Collins, M., Rechnitzer, T., Newcomb, A.E., Nixon, I., Yii, M., Rosalion, A., and Campbell, D.J. 2012. The association of blood transfusion with mortality after cardiac surgery: cause or confounding? *Transfusion*. 2013 Jan;53(1):19-27

4. Boyle, E., AM., G., Cohn, W., Sakwa, M., Reddy, V., and Perrault, L. 2013. The Post Operative Retained Blood Complex: Implications for Patient Recovery After Heart Surgery. *Manuscript in Preparation.*

5. Light, R.W. 2001. Pleural effusions following cardiac injury and coronary artery bypass graft surgery. *Semin Respir Crit Care Med* 22:657-664.

6. Light, R.W. 2002. Pleural effusions after coronary artery bypass graft surgery. *Curr Opin Pulm Med* 8:308-311.

7. Light, R.W., Rogers, J.T., Cheng, D., and Rodriguez, R.M. 1999. Large pleural effusions occurring after coronary artery bypass grafting. Cardiovascular Surgery Associates, PC. *Ann Intern Med* 130:891-896.

8. Light, R.W., Rogers, J.T., Moyers, J.P., Lee, Y.C., Rodriguez, R.M., Alford, W.C., Jr., Ball, S.K., Burrus, G.R., Coltharp, W.H., Glassford, D.M., Jr., et al. 2002. Prevalence and clinical course of pleural effusions at 30 days after coronary artery and cardiac surgery. *Am J Respir Crit Care Med* 166:1567-1571.

9. Ikaheimo, M.J., Huikuri, H.V., Airaksinen, K.E., Korhonen, U.R., Linnaluoto, M.K., Tarkka, M.R., and Takkunen, J.T. 1988. Pericardial effusion after cardiac surgery: incidence, relation to the type of surgery, antithrombotic therapy, and early coronary bypass graft patency. *Am Heart J* 116:97-102

10. Clark, G., Licker, M., Bertin, D., and Spiliopoulos, A. 2007. Small size new silastic drains: life-threatening hypovolemic shock after thoracic surgery associated with a non-functioning chest tube. *Eur J Cardiothorac Surg* 31:566-568.

11. Karimov, J.H., Gillinov, A. M., Schenck, L., Cook, M., Kosty Sweeney, D., Boyle, E.M., Fukamachi, K. . 2013. Incidence of chest tube clogging after cardiac surgery: A single-center prospective observational study. *Eur J Cardiothorac Surg* In Press.

12. Shalli S, Boyle EM, Saeed D, Fukamachi K, Chhn WE, Gillnov AM The Active Tube Clearance System: A novel Bed Side Chest Tube Clearance Device. 2010, *Innovations* Vol. 5:42-47

13. Shiose A, Takaseya T, Fumoto H, Aralawa Y, Horai T, Boyle E, Gillinov A, Fukamachi K. Improved Drainage with Active Tube Clearance. 2010, *CardioVasc Thorac Surg* Vol. 10:685-688

14. Arakawa Y, Shiose A, Takaseya T, Fumoto H, Kim H, Boyle E, Gillinov A, Fukamachi K Superior Chest Drainage with an Active Tube Clearance System: Evaluation of a Downsized Chest Tube. 2011, *Annals of Thoracic Surgery* Vol. 91:580-583.

15. World Medical Association's (WMA's) Declaration of Helsinki Ethical Principles for Medical Research Involving Human Subjects http://jama.jamanetwork.com/ on 10/21/2013.

(b)(4) Trade Secret Process- Testing

[redacted]

(b)(4) Trade Secret Process- Testing

[redacted]

(b)(4) Trade Secret Process- Testing

[redacted]

(b)(4) Trade Secret Process- Testing

[redacted]

Statistische Methode

(b)(4) Trade Secret Process- Testing

[redacted]

(b)(4) Trade Secret Process- Testing

[redacted]

REVISION HISTORY

Rev	DCN	Change Description	Release Date
A	N/A	Initial release.	(b)(4) Trade Secret Process

APPROVALS

(b)(4) Trade Secret Process- Testing

[redacted]

INTRODUCTION

"Applying Human Factors and Usability Engineering to Optimize Medical Device Design" draft guidance issued on: June 22, 2011, discusses the value of a human factors and validation test in demonstrating that the intended users of a medical device can safely and effectively perform critical tasks for the intended uses in the expected use environments. The guidance document points out particularly important elements of the validation study such as using a production version of the device, representative device users, actual use and to address all aspects of intended use.

A test protocol assessing the level of optimization of a device with respect to safety and effectiveness of use, should be designed such that it is sufficiently sensitive to capture use-related problems that exist whether the users are aware of use errors or not. Further, the test results should show no patterns of use failure or difficulties that could be eliminated or reduced through further modification of the design of the user interface.

PURPOSE

The purpose of this study is to validate that the intended users of the PleuraFlow System can safely and effectively perform critical tasks for the intended uses of the device in the use environment. The experimental method that will be used is a survey designed to capture the quality and effectiveness of training, clarity and adequacy of training materials including the Instructions for Use and performance of the device within the standard practice of patient care.

OBJECTIVES

Hazards that mostly result from instances of device or component failure, which are not dependent on how the user interacts with the PleuraFlow System, were considered during risk analysis.

The first clinical validation testing of the PleuraFlow System was conducted in (b)(4) Trade to fulfill the requirements to test the device under realistic conditions. It was a user preference pilot study conducted at the Montreal Heart Institute. The test results were provided to the agency as part of the original submission of the PleuraFlow System 510(k) (k093565). Survey results demonstrated that the potential for use error was minimized.

This protocol will assess post market *use-related hazards*, including use errors, such as failure to perceive, read, interpret, or recognize and act on information from the device. The study objectives extend beyond safety and consider any possibilities to improve device design, labeling, and product training to improve usability.

PROCEDURE

The intent of this survey is to seek users input to determine whether it is necessary to improve the design of the device, and the quality of the device user interface and product training such that errors that may occur during use of the device are either eliminated or reduced.

The following device factors will be considered for potential users:

- Identification of the end-users of the device
- The level of training users will have and/or receive
- User characteristics, such as functional capabilities, that could impact the safe and effective use of the device
- Ways in which users might use the device that could cause harm
- The following device factors will be considered for use environment:
  - Hospital, surgical suite, clinical setting.
- The following device factors will considered for user interface:
  - functions, capabilities, features
  - Indicated uses.

The Human Factor study is in addition to other sources of information on known use-related hazards including journal articles, proceedings of professional meetings, newsletters, and relevant internet sites.

Review of users feedback further validates the design and demonstrates that the Pleuraflow Catheter System is reasonably safe and effective for the intended users, uses and use environments. Any residual risk that remains after the validation testing would not be further reduced by modifications of design of the user interface (including any accessories and the IFU), is not needed, and is outweighed by the benefits that may be derived from the device's use.

The surveys will be distributed to clinicians who have received product training. These may include anesthesiologists, cardiologists, cardiothoracic surgeons, intensivists, physician assistants (PAs), Operating Room (O.R.) nurses, Intensive Care Unit (ICU) nurses and nurse practitioners. Participants' experience with product training, the "Quick Reference Guide", and end user experience with the device will be evaluated. Feedback about device performance will be collected and assessed.

(b)(4) Trade Secret Process- Testing

This study will provide user feedback in addition to other sources of information about known use-related hazards including journal articles, proceedings of professional meetings, newsletters, and relevant Internet sites such as:

- ***FDA's Medical Device Reporting (MDR) Program Search;***
- ***FDA's Adverse Event Reporting Data Files;***

- ***CDRH Medical Device Recalls;***
- ***CDRH Alerts and Notices (Medical Devices);***
- ***CDRH Public Health Notifications;***

(b)(4) Trade Secret Process- Testing

[redacted]

(b)(4) Trade Secret Process- Testing

[redacted]

(b)(4) Trade Secret Process- Testing

[redacted]

REVISION HISTORY

Rev	DCN	Change Description	Release Date
A	N/A	Initial release.	(b)(4) Trade Secret

APPROVALS

(b)(4) Trade Secret Process- Testing

[redacted]

PURPOSE

The purpose of this report is to document the findings of a post market human factors and usability survey for the PleuraFlow® Active Clearance Technology® (ACT™) System. This survey was conducted to meet Quality System requirements and be in compliance with 21 CFR Part 820.30 and European council directive.

BACKGROUND

Human Factors Engineering (HFE) and Usability Engineering (UE) considerations and approaches were incorporated into device design, development and risk management processes per ISO 14971, *Medical devices – Application of risk management to medical devices* during the original design. Hence, anticipated use-related hazards and unanticipated use-related hazards were originally identified and appropriately mitigated. Those adequately addressed the needs of the intended users and optimized the design of the PleuraFlow System as safe and effective for the users. The device has been demonstrated to be safe and effective and has been further shown through human factors study to validate the original data as presented during the original 510(k) submission.

REFERENCE DOCUMENTS

- 21 CFR Part 820.30
- MDD 93/42/EEC Council Directive as modified by MDD 2007/47/CE
- EN ISO 13485:2012 "Medical Devices Quality management systems – Requirements for regulatory purposes" in compliance with MDD 93/42/CEE
- ISO 13485: 2003 "Medical Devices Quality Management Systems- Requirements for Regulatory Purposes" in compliance with CMDCAS
- ISO 14971:2012 "Medical Devices Application of Risk Management to Medical Devices".
- (b)(4) Trade Secret Process- Testing [redacted]

[redacted]

(b)(4) Trade Secret Process- Testing

[redacted]

(b)(4) Trade Secret Process- Testing

[redacted]

(b)(4) Trade Secret Process- Testing

[redacted]

(b)(4) Trade Secret Process- Testing

[redacted]

(b)(4) Trade Secret Process- Testing

[redacted]

(b)(4) Trade Secret
Process- Testing

[redacted]

(b)(4) Trade Secret Process- Testing

[redacted]

(b)(4) Trade Secret Process- Testing

[redacted]

(b)(4) Trade Secret Process- Testing

[redacted]

(b)(4) Trade Secret Process- Testing

(b)(4) Trade Secret Process- Testing

[redacted]

(b)(4) Trade Secret Process- Testing

[redacted]

(b)(4) Trade Secret Process- Testing

[redacted]

(b)(4) Trade Secret Process- Testing

[redacted]

(b)(4) Trade Secret Process- Testing

(b)(4) Trade Secret Process- Testing

U.S. Food and Drug Administration Center for
Devices and Radiological Heath Document Mail
Center – WO66-G609 10903 New Hampshire
Avenue
Silver Spring, MD 20993-0002

Re: Traditional 510(k) Premarket Notification PleuraFlow® System K150042 by ClearFlow, Inc.

To Whom It May Concern,

(b)(4) Trade Secret Process- Testing

(b)(4) Trade Secret Process- Testing of ClearFlow, Inc. I understand you are reviewing a 510(k) Premarket Notification that was submitted by ClearFlow, Inc. for a change in the Indications for Use of the PleuraFlow System. ClearFlow has contacted me seeking feedback about my clinical experience using the PleuraFlow System on pediatric patients. It is my understanding that my input regarding pediatric indications might be helpful.

I practice pediatric heart and lung surgery at (b)(4) Trade Secret Process- Testing which is a 420 bed teaching private teaching hospital that treats about 450 infants, children and adults annually with congenital heart and lung disorders. Each case requires chest tube drainage in early recovery to remove blood from around the heart and lungs. I have been using the PleuraFlow System to preserve the patency of these chest drains in my practice since (b)(4) Trade and have used the device on more than (b)(4) Trade patients to date. I regard the maintenance of chest drain patency as absolutely vital after cardiac surgery since the onset of problems related to retained blood can be rapid and disastrous for the patient – even more so for pediatric pa(b)(4) Trade Secret Process- atively less mediastinal volume/capacity. Although I have used PleuraFlow System size French, I now only utilize the (b)(4) Trade Secret PleuraFlow System on the majority of my cases. The only present limitation to the use of the PleuraFlow system in my practice is that the device in its current configuration is not compatible for use in neonates and in some smaller infants due to the small size of the patients. The limiting feature relates to the length of the draining portion of the chest tube that has the side holes inside the body (referred to as the "Effective Drainage Length", or EDL). The effective drainage length is 4 inches. Thus, a pediatric patient must have the dimensions of the mediastinum that is longer than this EDL for all the side holes to be contained within the patient's chest. In my practice, this is about 2/3 of my patients. In the subgroup of neonates, nearly all patients are excluded. In the subgroup of infants, it is an easy judgment call I make in the operating room as to whether the size of the PleuraFlow System is appropriate for the patient based solely on the EDL.

I understand the company now has efficacy data showing a reduction in complications related to retained blood syndrome (RBS). I am reasonably inclined to expect that these benefits will translate to the infant, child and adolescent pediatric subgroups I treat. The one exception is the incidence of postoperative atrial fibrillation (POAF), which is minimal in the pediatric population compared to the adult cardiac surgery population. I regard the clinical data from Germany as credible and, though subject to further user

(b)(4) Trade Secret Process- Testing

validation, supportive of my own experience of the device in practice these last three years. I have never found it necessary to deployed more than one PleuraFlow System in the mediastinum and this includes adult patients in my surgical practice as old as (b)(4) Trade Secret just on (b)(4) Trade Pleuraflow catheter is all that I use, unless the patient is too small. The PleuraFlow System has performed its primary function consistently and reliably. It keeps the chest tube clear and prevents clogging, something I was not historically capable of safeguarding until I adopted the use of this device. It eliminates or at least, greatly reduces the risk, of re-intervention for morbidities such as cardiac tamponade, pericardial and pleural effusions and the need to re-intervene to replace a clogged chest tube. In addition, when symptoms indicating a clinical problem do emerge, the knowledge that the chest drain is "open" and not occluded can be life saving in determining the differential diagnosis of the underlying cause. The 'peace of mind' that this system has provided my team has been significant. Conventional chest drains occlude regularly in small children, because the chest tubes are small. Visible clotting above the skin line can be easily recognized, but most clotting occurs inside the body and out of sight, thus providing a false-sense of security. This fact can lead to a missed retention of blood and fluid that is poorly tolerated in these small patients. I would regard the addition of a "shorter EDL" for use in my small patients to be most advantageous compared to the current unsatisfactory alternatives.

Thank you for considering my input. Please feel free to contact me if I can help as you consider these issues. My email (b)(4) Trade Secret Process- Testing

Sincerely,

(b)(4) Trade Secret Process- Testing

Your Littlest Patients Are Our Biggest Priority

Pediatric Chest Drain & Thoracic Catheter Solutions

ATRIUM
MAQUET GETINGE GROUP

The Pediatric Advantage...

because little patients are not the same as big patients.

Atrium, the leading manufacturer of chest drainage products worldwide, offers a complete family of the finest quality, most innovative thoracic drainage products available, including specialty pediatric drainage systems, DEHP-free thoracic catheters and problem solving accessories.

Our Water Seal Chest Drains *set the standard* for ease of use, speed of setup and controlled vacuum performance. Dedicated pediatric models are available in traditional wet suction and state-of-the-art dry suction regulator designs. Their lower profile body-style has been carefully designed to fit through today's pediatric bed rails. Atrium's pediatric chest drains feature patient friendly graphics, a reduced capacity collection chamber design, smaller diameter patient tubing and a choice of pediatric connectors to provide convenient, secure connection to smaller sized thoracic catheters.

All of Atrium's thoracic catheters are latex-free and DEHP-free. Latex allergies and DEHP - di(2-ethylhexyl) phthalate, a plasticizer found in many PVC products - have been found to cause adverse health effects.* Atrium was the first chest drain manufacturer to make the transition to DEHP-free thoracic catheters.

As the industry leader, Atrium offers clinicians...

The Pediatric Advantage.

Pediatric **Drains**

2012-320

Ocean™ Series Infant/Pediatric Wet Suction Water Seal Chest Drain

Traditional Design You Trust…
Innovations You'll Appreciate.

The Ocean™ 2012 chest drain features a **calibrated water seal** that provides convenient patient pressure diagnostics. Atrium optimizes the use of a familiar **wet suction operating system**.

Atrium's complete family of chest drains are MRI compatible, latex-free, and feature multi-position hangers, a needleless access port for patient drainage sampling and automatic high negative pressure relief.

Accessories

Step Down Connector
for 8, 10 & 12 Fr catheters
(3/16" x 3/8")
19918

Adult Pediatric Connector
for 16 & 20 Fr catheters
(1/4" x 3/8")
19913

3612-100

Oasis™ Series Infant/Pediatric Dry Suction Water Seal Chest Drain

The **Easiest-to-Use** Water Seal Chest Drain **Available.**

The Oasis™ dry suction water seal chest drain offers quick set-up, ease-of-use, and **patient-friendly graphics.**

The Oasis™ 3612 combines **pre-packaged sterile water**** to fill the water seal with state-of-the-art dry suction regulation, and improved **knock-over protection.** When it comes to monitoring small changes in patient drainage, fast, accurate fluid assessment has never been easier with Atrium's improved drainage graduations and highly visible collection chamber design.

Sims Connector
for 8, 10 & 12 Fr catheters
(3/16" x 1/4")
19916

Pediatric Connector
for 16 Fr or larger catheters
(1/4" x 1/4")
19914

Drain Caddy
to ambulate and
eliminate knock-overs
19911

Pediatric **Catheters**

PVC, Silicone, HydraGlide™ Coated and Non-Coated Thoracic Catheters

All of Atrium's Thoracic Catheters are **Latex-free** and **DEHP-free**

We offer a full line assortment of PVC and Silicone, HydraGlide™ Coated and non-coated Thoracic Catheters† in a variety of diameters, lengths and eyelet configurations. Our indication by design platform including straight, right angle or trocar catheters and accessories are specialized products for specific applications.

100% LATEX FREE

100% DEHP FREE

ATRIUM UNIVERSITY

Atrium Medical offers comprehensive educational support resources available on line at **atriumuniversity.com** (free of charge). Visit AU online for our Managing Chest Drainage Continuing Education Program, and to learn more about the safe and effective use of chest drain systems.

ORDERING INFORMATION

Chest Drains

Ocean Wet Suction Water Seal Chest Drains

Model	Description	Capacity	Case Qty.
2012-320	Infant/Pediatric with In-Line Connector	200ml	6
2002-000	Adult Single Collection	2100ml	6

Oasis Dry Suction Water Seal Chest Drains

Model	Description	Capacity	Case Qty.
3612-100	Infant/Pediatric with In-Line Connector	200ml	6
3612-400	Infant/Pediatric without In-Line Connector	200ml	6
3600-100	Adult Single Collection	2100ml	6

Thoracic Drainage Accessories

Model	Description	Dimensions	Qty.
19911	Drain Caddy used to ambulate & eliminate knock-overs	N/A	1
19913	Adult /Pediatric Connector used with adult drain & 16 – 20 French catheters	1/4" x 3/8"	25
19915	Pediatric Connector used with adult drain & 16 French catheters or larger	1/4" x 1/4"	25
19916	Sims Connector used with 1/4" patient tube & 8, 10, 12 French catheters or larger	3/16" x 1/4"	25
19918	Step Down Connector used with adult drain & 8, 10, 12 French catheters	3/16" x 3/8"	25

PVC Catheters

Model	Description	Length	FR Size	# Eyelets
8008	Straight	8"	8FR	2
8010	Straight	8"	10FR	2
8012	Straight	16"	12FR	4
8016	Straight	16"	16FR	4
8020	Straight	22"	20FR	4
8112	Right Angle	16"	12FR	4
8116	Right Angle	16"	16FR	4
8120	Right Angle	22"	20FR	4
8408	Trocar	8"	8FR	2
8410	Trocar	8"	10FR	2
8412	Trocar	9"	12FR	2
8416	Trocar	10"	16FR	2
8420	Trocar	16"	20FR	2

HydraGlide™ Silicone Chest Tube Catheters

Model	Description	Length	FR Size	# Eyelets
14116	Straight	20"	16FR	4
14120	Straight	20"	20FR	5

Silicone Chest Tube Catheters

Model	Description	Length	FR Size	# Eyelets
14016	Straight	20"	16FR	4
14020	Straight	20"	20FR	5
14216	Right Angle	20"	16FR	4
14220	Right Angle	21"	20FR	5

HydraGlide™ PVC Catheters

Model	Description	Length	FR Size	# Eyelets
9008	Straight	8"	8FR	2
9010	Straight	8"	10FR	2
9012	Straight	16"	12FR	4
9016	Straight	16"	16FR	4
9020	Straight	22"	20FR	4
9112	Right Angle	16"	12FR	4
9116	Right Angle	16"	16FR	4
9120	Right Angle	22"	20FR	4
9408	Trocar	8"	8FR	2
9410	Trocar	8"	10FR	2
9412	Trocar	9"	12FR	2
9416	Trocar	10"	16FR	2
9420	Trocar	16"	20FR	2

Atrium Catheters are packaged 10 per case.

* Research has shown that exposure to DEHP is a reproductive and developmental toxicant that can disrupt hormones and cause other health problems. Especially vulnerable are infants and toddlers, pregnant and lactating women, and patients undergoing certain medical procedures. The FDA has recommended that medical device manufacturers reformulate products to remove DEHP and that hospitals use alternatives to DEHP-containing products, whenever possible, for high risk populations.

Reference: CDRH web site at www.fda.gov/cdrh/ost/dehp-pvc.pdf.

** Patented

† HydraGlide available in USA only.

Federal (USA) law restricts this device to sale by or on the order of a physician. Please refer to our website, www.atriummed.com, or our product catalogs for a complete listing of models and pricing.

To place an order or to request product information call Atrium at 800-528-7486 or 603-880-1433.

CE 0086 MR MADE IN USA 100% LATEX FREE 100% DEHP FREE 24/7

Visit us online at: www.atriummed.com

You care for your patients 24 hours a day. **So do we.**

24-Hour Technical Support
800-528-7486

ATRIUM
MAQUET GETINGE GROUP

ATRIUM MEDICAL CORPORATION
5 Wentworth Drive
Hudson, New Hampshire 03051 U.S.A.
603-880-1433 603-880-6718

ATRIUM EUROPE B.V.
Rendementsweg 20 B
3641 SL Mijdrecht, The Netherlands
+31 297 230 420 +31 297 282 653

ATRIUM AUSTRALIA-PACIFIC RIM PTY. LTD.
Level 6, 579 Harris Street
Ultimo NSW 2007 Australia
+61 2 8272 3100 +61 2 8272 3199

© Atrium Medical Corporation 2012 All rights reserved Printed in U S A 02/12 Part #0193 Atrium, Ocean, Oasis, Express and Pneumostat are trademarks of Atrium Medical Corporation, a business unit of MAQUET Cardiovascular

Section 4: Indications for Use Statement

510(k) Number:

Device Name: PleuraFlow® System

Indications for Use: The PleuraFlow® system is indicated for use during open surgical procedures and trauma in order to prevent or minimize chest tube occlusion and subsequent retained blood and fluid accumulation within the operative site after closure of the surgical wound. The device is indicated for use in cardiothoracic surgical procedures. The product is indicated for adult infant, child and adolescent pediatric patients under clinical settings.

Prescription Use ___X____ AND/OR Over-The-Counter Use _____

(Part 21 CFR 801 Subpart D) (21 CFR 807 Subpart C)

(PLEASE DO NOT WRITE BELOW THIS LINE-CONTINUE ON ANOTHER PAGE IF NEEDED)

Concurrence of CDRH, Office of Device Evaluation (ODE)

Page 1 of __1

Section 5: 510(k) Summary

The following information is provided as required by 21 CFR § 807.87 for **PleuraFlow® System** 510(k) premarket notification. In response to the Safe Medical Devices Act of 1990, the following is a summary of the safety and effectiveness information upon which the substantial equivalence determination is based.

Date of Submission: April 14, 2015

Applicant:
Clear Flow, Inc.
1630 S. Sunkist St., Suite E
Anaheim CA
92806

Primary Contact Person:
Dov Gal, DVM
ClearFlow, Inc.
1630 S. Sunkist St., Suite E
Anaheim CA
92806
Phone: 714-916-5014
Fax: 714-916-5019
Email: dgal@clearlflow.com

CEO/ President:
Paul Molloy
ClearFlow, Inc.
1630 S. Sunkist St., Suite E
Anaheim CA
92806
Phone: 714-905-5271
Fax: 714-916-5019
Email: pmolloy@clearlflow.com

Device Proprietary Name: PleuraFlow® System

Device Common Name: Introduction/drainage; wound drain catheter system.

Regulatory Class and Name: Class II, Powered Suction Pump

Product Codes: OTK and GBX

Indication For Use: The PleuraFlow System is indicated for use during open surgical procedures and trauma in order to prevent or minimize chest tube occlusion and subsequent retained blood and fluid accumulation within the operative site after closure of the surgical wound. The device is indicated for use in cardiothoracic surgical procedures. The product is indicated for adult, infant, child and adolescent pediatric patients under clinical settings.

Predicate Device: Predicate device is the PleuraFlow Catheter System (K093565) by ClearFlow, Inc., AKA Clear Systems, Inc.

Device Description: The PleuraFlow System is comprised of a silicone Chest Tube and a Clearance Apparatus. The PleuraFlow Chest Tube is available in four (4) standard sizes (20FR, 24FR, 28FR and 32FR). Each Chest Tube has a Cut Length of 19 inches (48.3 cm) with graduated measurements in centimeters from the distal eyelet. Each Chest Tube has a barium stripe to facilitate visualization. The Chest Tube is connected to a Clearance Apparatus, which is connected to the tubing from the drainage canister. The Clearance Apparatus consists of a Guide Tube and a PTFE-coated Clearance Wire with a Loop set on its distal end, bent at a 105-degree angle. The Clearance Apparatus is advanced into the PleuraFlow Chest Tube using a magnetic Shuttle. When indicated, the Clearance Wire and Loop is advanced and retracted within the PleuraFlow Chest Tube to proactively prevent or break up and clear any tube obstructions or clogging to keep the tube patent.

Indications for Use: The PleuraFlow System is indicated for use during open surgical procedures and trauma in order to prevent or minimize chest tube occlusion and subsequent retained blood and fluid accumulation within the operative site after closure of the surgical wound. The device is indicated for use in cardiothoracic surgical procedures. The product is indicated for adult infant, child and adolescent pediatric patients under clinical settings.

Performance Data: The safety and effectiveness of the PleuraFlow System has been previously demonstrated through design validation and verification that were cleared under 510(k) (K093565). Performance has been further demonstrated through post-market data.

Use of the device over the last four (4) years has shown that the product has significantly reduced the complications for patients who have received treatment with PleuraFlow versus other products during and after surgery.

Studies have linked both chest tube clogging and retained pericardial blood with POAF.[2, 10] There is a substantial body of literature illustrating that shunting blood through pericardial windows to divert the blood to the pleural spaces can reduce POAF.[10,] demonstrates by adhering to a protocol developed to maximize chest tube patency, POAF can be reduced. Consistent with prior studies, this link appears to be related to reducing RBS. A manuscript titled “Reduction in Interventions for Post Operative Effusions and Atrial Fibrillation with Active Clearance of Chest Drainage Catheters” was submitted to the Journal of Thoracic and Cardiovascular Surgery. Authors are Sirch J.1, Ledwon M.1, Püski T.1, Grossmann I.1, Boyle EM.2, Pfeiffer S.1,Fischlein T.1 From the following institutions:

1. Cardiac Surgery, Heart Center, Paracelsus Medical

University, Nurenberg, Germany,

2. St. Charles Medical Center, Bend, Oregon, United States.

Conclusion: The evaluation of the PleuraFlow System does not raise any additional concerns regarding safety and effectiveness and may therefore be considered substantially equivalent to the predicate device.

Section 10: Executive Summary

Device Background

The PleuraFlow System is a wound drainage tube with an integrated tube Clearance Apparatus that allows the user to clear patient's retained blood and fluids, which, if not cleared, could impair surgical wound healing. The size, configuration, and materials of these commercially available four (4) models of the System (20FR, 24FR, 28FR and 32FR) have not changed compared to the predicate. The mechanism of action and indications are the same as the predicate device, PleuraFlow System (K093565). The device uses mechanical "scraping" of the sides of the chest tube to loosen material so that it can be suctioned out of the device.

The Clearance Apparatus uses magnetic coupling between magnets contained within the Shuttle; one set of magnets, which is external to the Guide Tube, and another set of magnets inside the Guide Tube that are permanently attached to the distal end of the Clearance Wire, farthest from patient. The magnets are within the Guide tube, which is external to the patient. This magnetic mechanism is identical to the system, cleared under 510K (K093565).

Functional testing, packaging and sterilization validation, and materials information, are identical to predicate. These are same as in the original predicate submission, which support the substantial equivalence and safety and effectiveness of the device.

Device Proprietary Name: PleuraFlow® System.

Device Common Name: Introduction/drainage; wound drain catheter system.

Regulatory Class & Name: Class II, Powered Suction Pump.

Product Codes: OTK and GBX.

Indication For Use: The PleuraFlow System is indicated for use during open surgical procedures and trauma in order to prevent or minimize chest tube occlusion and subsequent retained blood and fluid accumulation within the operative site after closure of the surgical wound. The device is indicated for use in cardiothoracic surgical procedures. The product is indicated for

adult infant, child and adolescent pediatric patients under clinical settings.

Predicate Device: Predicate device is the PleuraFlow Catheter System (K093565) manufactured by ClearFlow, Inc., AKA Clear Catheter Systems, Inc.

Device Description: The PleuraFlow System is comprised of a silicone Chest Tube and a Clearance Apparatus. The PleuraFlow Chest Tube is available in four (4) standard sizes (20FR, 24FR, 28FR and 32FR). Each chest tube Cut Length is 19 inches (48.3 cm) with graduated measurements in centimeters from the distal eyelet. Each chest tube has a barium stripe to facilitate visualization. The Chest Tube is connected to a Clearance Apparatus, which is connected to the tubing from the drainage canister. The PleuraFlow Clearance Apparatus consists of a Guide Tube and a PTFE-coated Clearance Wire and Loop set on its distal end, bent at a 105- degree angle. The Clearance Apparatus is advanced into the PleuraFlow Chest Tube using a magnetic Shuttle. When indicated, the Clearance Wire and Loop is advanced and retracted within the PleuraFlow Chest Tube to proactively prevent or break up and clear any tube obstructions or clogging to keep the tube patent.

Indications for Use: The PleuraFlow System is indicated for use during open surgical procedures and trauma in order to prevent or minimize chest tube occlusion and subsequent retained blood and fluid accumulation within the operative site after closure of the surgical wound. The device is indicated for use in cardiothoracic surgical procedures. The product is indicated for adult infant, child and adolescent pediatric patients under clinical settings.

Performance Data: The safety and effectiveness of the PleuraFlow System have been previously demonstrated through design validation and verification that were cleared under 510(k) (K093565). The information has been further demonstrated through post market data.

The use of device over the last 4 years has shown that the product has significantly reduced the complications for patients who have received treatment with PleuraFlow System versus other products during and after surgery. A manuscript titled "Reduction in Interventions for Post Operative Effusions and Atrial Fibrillation with Active Clearance of Chest Drainage Catheters" was submitted to the Journal of Thoracic and Cardiovascular Surgery. Authors are Sirch J.1, Ledwon M.1, Püski T.1, Grossmann I.1, Boyle EM.2, Pfeiffer S.1,Fischlein T.1 From the following institutions:

1. Cardiac Surgery, Heart Center, Paracelsus Medical University, Nurenberg, Germany,
2. St. Charles Medical Center, Bend, Oregon, United States.

Performance Data: Based on the information drawn from the Post-market studies, Verification and Validation, as well as the risk assessment and change assessments, it is demonstrated that the device is as safe and effective as the predicate device. The post-market study revealed newer benefits of using the device as identified in the Indication for Use and supported by the post-market studies.

Section 11: Device Description

The PleuraFlow® System incorporates a Clearance Apparatus referred to as Active Clearance Technology® (ACT™), which is intended to prevent clogging and occlusion of PleuraFlow Chest Tubes. The product is used for pleural and mediastinal drainage after cardiothoracic surgery and trauma.

The primary components of the System are the PleuraFlow Chest Tube and the PleuraFlow Clearance Apparatus. The PleuraFlow Chest Tube is a silicone chest tube. It is connected to a Clearance Apparatus, which is connected to the tubing from the drainage canister. The PleuraFlow Clearance Apparatus consists of a Guide Tube with a Clearance Wire and Loop that is advanced into the PleuraFlow Chest Tube using a magnetic Shuttle. When indicated, the Clearance Wire and Loop is advanced and retracted within the PleuraFlow Chest Tube to proactively prevent or break up and clear any tube obstructions or clogging to keep the tube patent. Figure 1 below is a pictorial representation of the PleuraFlow System.

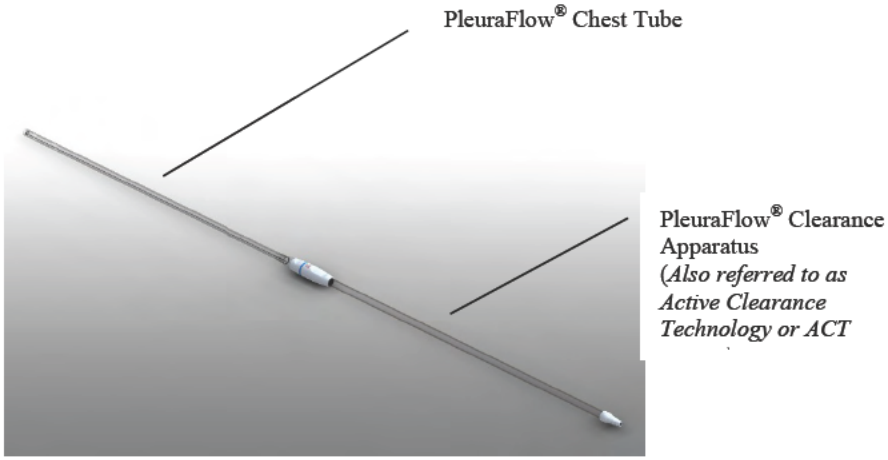

Figure 1 - PleuraFlow® System

The PleuraFlow System consists of one PleuraFlow Chest Tube and one Clearance Apparatus contained in a single sterile package similar to the predicate. The Chest Tube is included in the package to ensure it is of the appropriate length and inner diameter to accommodate the Clearance Wire and Loop in the Clearance Apparatus when fully advanced into the Chest Tube. The PleuraFlow Systems are available in four (4) sizes- 20FR, 24FR, 28FR and 32FR. Each of the

Chest Tubes has graduated measurements in centimeters from the distal eyelet. There is a barium stripe in the Chest Tube to facilitate visualization in the chest cavity under x-ray. The Chest Tube is connected to the Clearance Apparatus. A connector at the distal end of the Clearance Apparatus connects to commercially available drainage vacuum systems.

Technological Characteristics

The Clearance Apparatus is composed of a PVC Guide Tube that is used to drain blood, fluid, and air. Inside the Guide Tube there is a PTFE-coated guidewire that has a loop bent at a 105-degree angle as illustrated in Figure 2. This is called the Clearance Wire and Loop.

Figure 2– Clearance Wire and Loop

The Clearance Wire and Loop is sized to minimize the likelihood of exiting the Chest Tube. The Clearance Wire and loop is magnetically driven by two sets of magnets; one set encased in the plastic handle of the Shuttle and one at the base (distal end) of the Clearance Wire farthest from patient, as seen in Figure 3.

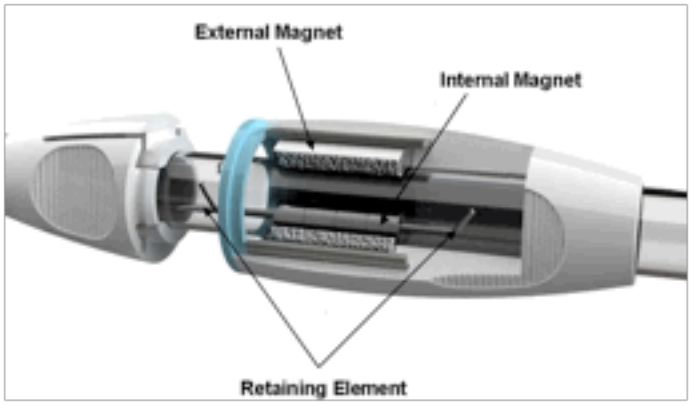

Figure 3 – Shuttle

Because the external magnet remains outside the Guide Tube, it allows the internal environment of the tube to remain sterile, while facilitating the clearing mechanism of the Clearance Wire and Loop to remain within the Chest Tube. It is important to note that the magnets are intended to facilitate coupling and are not intended to provide energy to the patient. A magnetic shield is provided in the external housing to reduce the magnetic field that extends beyond the Shuttle Guide. A retention member is set on the Clearance Wire and Loop in proximity to the internal magnets to prevent the Clearance Wire and Loop from ever completely exiting the Guide Tube or the Clearance Wire and Loop from exiting the proximal tip of the Chest Tube.

When the Shuttle is advanced and retracted along the Guide Tube, the Clearance Wire and Loop moves back and forth inside the Chest Tube, which proactively prevents or breaks up and clears any obstructions from within the Chest Tube and pulls them towards the drainage canister. The suction mechanism from the drainage canister then pulls any clot and debris from the Clearance Apparatus to the drainage canister.

Intended Use

The device is intended for use for prolonged duration (>24 hours to ≤14 days). The device is provided sterile, and is considered surgically invasive. Figure 4 below is a pictorial representation of the device set-up as it is intended to be used in the clinical settings.

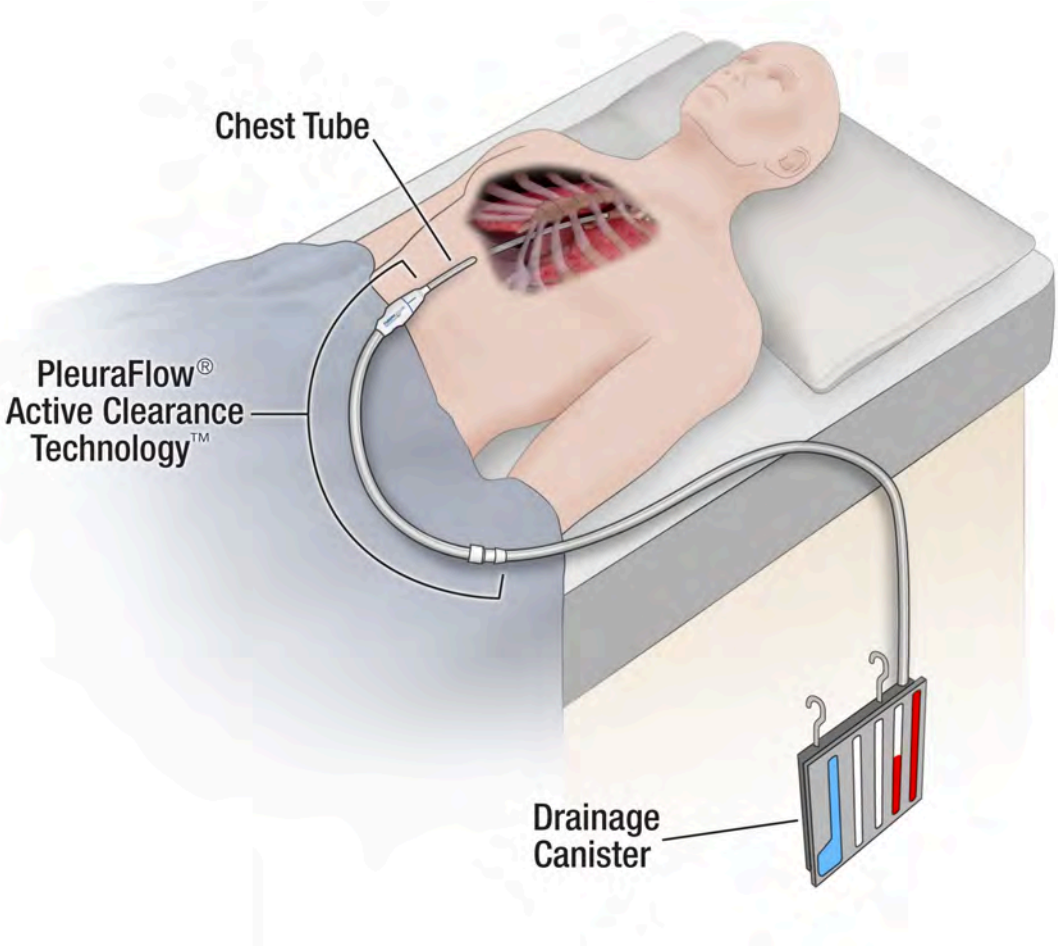

Figure 4- PleuraFlow set up

Design Control

The PleuraFlow System was developed under Design Control. After generation of a device concept, the design control process was initiated by creation of a design and development plan. Next, design input requirements were generated and risk management initiated. Design outputs including drawings and productions documents were then realized. Based on the requirements, a design verification and validation plan was developed and a device master record initiated. Design verification tests were completed to verify that the design outputs met the design inputs. A master validation plan was created and process validations completed. Design validation was conducted to validate that the device met the user requirements. Design reviews and risk management were conducted throughout. Regulatory submissions were completed prior to commercialization.

Design control including design input considered user interface and design verification activities were conducted throughout the development process including task/function analyses, user studies, prototype tests and mock-up reviews. Formative and validation testing fulfill the requirements to test the device under realistic conditions. Validation testing demonstrated that the potential for use error has been minimized.

Performance data

Performance data were collected to verify and validate the device. Testing included tensile strength of bonded joints, flow rate, kink resistance and leak testing. Dimensional testing and radiographic testing were also conducted. Strength of the magnetic coupling, Clearance wire passage, as well as magnetic field-testing were completed. Package integrity, transit testing, and environmental testing were completed. Shelf life up to 32 months was completed, initially using accelerated aging followed by real-time aging. The real-time aging study is included in this submission, as it was not part of the predicate submission, (Appendix 14-1). Testing on animals was conducted and a limited clinical study was completed; those were not repeated since the predicate clearance.

Device drawings are presented in Appendix 11-1. Detailed materials information is contained in Section 15, Biocompatibility.

Instructions for Use

DESCRIPTION:

The PleuraFlow® Active Clearance Technology® (ACT™) System incorporates a Clearance Apparatus intended to prevent clogging and occlusion of PleuraFlow Chest Tubes used for pleural and mediastinal drainage after cardiothoracic surgery and trauma.

The primary components of the System are the PleuraFlow Chest Tube and the PleuraFlow Clearance Apparatus. (FIG. 1) The PleuraFlow Chest Tube is a silicone chest tube. It is connected to a Clearance Apparatus, which is connected to the tubing from the drainage canister. (FIG. 3) The PleuraFlow Clearance Apparatus consists of a Guide Tube with a Clearance Wire and Loop that is advanced into the PleuraFlow Chest Tube using a magnetic Shuttle Guide. When indicated, the Clearance Wire and Loop is advanced and retracted within the PleuraFlow Chest Tube to proactively prevent or break up and clear any tube obstructions or clogging to keep the tube patent. Components of the PleuraFlow System are not made with natural rubber latex.

INDICATIONS:

The PleuraFlow System is indicated for use during open cardiothoracic surgical procedures and trauma in order to prevent/minimize chest tube occlusion and subsequent retained blood fluid and air accumulation within the operative site after closure of the surgical wound. The device is indicated for use in cardiothoracic surgical procedures. The product is indicated for adult, infant, child and adolescent pediatric patients under clinical settings. The device is inserted through the skin adjacent to open surgical incision. The proximal end of the drain is positioned within the operative site prior to repair of the incision. The device's distal end is attached to an appropriate suction source in order to allow efflux of bloody, serosanguinous, chylous, purulent fluid, and/or other fluids from the operative site that could impair surgical wound healing. The device is indicated for use in cardiothoracic surgical procedures.

CONTRAINDICATIONS:

The PleuraFlow System is contraindicated for patients with a history of intolerance to implantable silicone materials.

This device should not be used in proximity to a MRI.

SET UP INSTRUCTIONS

Prior to Placement:

• Check the package for damage before opening.

To open the package:

• Open the Pouch and deliver the contents to the sterile field using aseptic technique.
• Inspect thoroughly, assuring that it is not kinked or otherwise damaged. If there is any damage, replace with a new device.

Inserting the PleuraFlow System

• Insert the PleuraFlow Chest Tube into the pleural or mediastinal space according to standard methods.

It is recommended that at least one PleuraFlow System is used in the anterior mediastinum as the majority of postoperative bleeding occurs in this location.

WARNING: The Chest Tube is not intended for direct contact with the central circulatory system.

Care should be taken to ensure the path of the PleuraFlow Chest Tube is as straight as possible to minimize the resistance of the Clearance Wire and Loop inside the Chest Tube. In some instances, excessive curvature and tortuosity may result in activating the Magnetic Safety Release.

• Secure the PleuraFlow Chest Tube according to standard methods.

• Take care not to constrict the PleuraFlow Chest Tube when securing in place, which may restrict the movement of the Clearance Wire and Loop.

• After insertion, when trimming the PleuraFlow Chest Tube, cut the Chest Tube precisely where indicated by the labeling that indicates "CUT". (FIG. 2)

• WARNING: Do not attempt to cut the PleuraFlow Chest Tube shorter than indicated by the "CUT" indicator. This could result in the Clearance Wire and Loop extending beyond the tip of the Chest Tube, which could potentially damage internal structures.

Connect the Clearance Apparatus between the PleuraFlow Chest Tube and the drainage tubing (FIG. 3)

• Once the PleuraFlow Clearance Apparatus is connected to the PleuraFlow Chest Tube, advance the external Shuttle Guide toward the proximal barb and Chest Tube. This will advance the Clearance Wire and Loop into the proximal end of the Chest Tube. (FIG. 4)

• Click the Shuttle Guide into the proximal barb housing to park the Clearance Wire and Loop in the proximal end of the Chest Tube.

• Connect the distal barb adapter of the Clearance Apparatus to the drainage tubing that goes to the drainage canister.

• Connect the drainage canister to the suction source.

- Maximum vacuum: -40 cmH_2O

• If a Y-connection is indicated, ensure the Y-junction is placed distal to the Clearance Apparatus. Additional drainage tubing may be used to compensate for length discrepancies.

POST INSERTION INSTRUCTIONS

• Confirm tip position of the PleuraFlow Chest Tube according to institution protocol. Although the PleuraFlow Chest Tube material contains a radiopaque stripe to aid in the radiographic visualization of the PleuraFlow Chest Tube, the tube clearance memberClearance Wire and Loop may be left in place to improve radiographic visualization.

USE OF THE CLEARANCE APPARATUS

• Only a qualified healthcare practitioner should operate the device.
• When it is indicated to clear the PleuraFlow Chest Tube, the Shuttle Guide is disengaged from the

proximal connector, and moved down the Clearance Apparatus, away from the patient and toward the drainage canister tubing. (FIG. 5)

• The Clearance Apparatus should be actuated often in the setting of thick output, such as clotting blood, to ensure the chest tube is patent.

- It is recommend that the device is actuated to clear the PleuraFlow Chest Tube every 15 minutes during the first 8 hours after placement when bleeding is typically more common, then every 30 minutes for the next 16 hours, then every hour thereafter.
- The device should be actuated as needed in addition to these baseline requirements.
- This should be repeated as often as necessary to keep the tube patent and free of any occlusions.

• Each time the Clearance Apparatus is actuated to clear the PleuraFlow Chest Tube; the Clearance Apparatus should be inspected for any clot or occluding material accumulating on the Clearance Wire and Loop.

- If obstructive clot is forming on the Clearance Wire and Loop, steps should be taken to dislodge the clot or fibrinous material stuck to the wire.
- If this cannot be cleared from the wire and is obstructing drainage, the Clearance Wire and Loop should be parked outside the PleuraFlow Chest Tube, in the Clearance Apparatus, by moving the Shuttle Guide to the distal portion of the Clearance Apparatus and leaving it outside of the Chest Tube.

• Traditional methods of chest tube clearance can be carried out at any time, as long as the Clearance Wire and Loop is fully retracted outside of the PleuraFlow Chest Tube.

• When not in use, the Shuttle Guide should be parked by clicking it to the proximal barb, thereby parking the Clearance Wire and Loop in the proximal end of the PleuraFlow Chest Tube. (FIG. 6)

• The Clearance Apparatus should be removed within 5 days or once the bleeding and clotting have ceased, whichever is sooner. This can be done by removing the PleuraFlow Chest Tube and the Clearance Apparatus together, if clinically indicated, or the Chest Tube can be left in place, the Clearance Apparatus removed, and the Chest Tube connected directly to the drainage tubing. The chest tube can then be left in place until removal is clinically indicated up to two weeks from insertion.

TROUBLE SHOOTING

• If obstructive clot appears on the Clearance Wire and Loop, steps should be taken to dislodge the clot into the larger diameter Guide Tube.

- Gently squeeze the wire through the PleuraFlow Chest Tube or Guide Tube while advancing the Clearance Wire and Loop to clear off clots.
- Rapidly run the wire back and forth to dislodge any clot while taking care not to squeeze the Clearance Loop.
- Flick or tap the PleuraFlow Chest Tube and Guide Tube.
- Gently tap the Shuttle Guide against the distal connector.
- If clot remains adherent to the Clearance Wire and Loop, withdraw it from the PleuraFlow Chest Tube and leave in the Guide Tube.

- If further tube clearance is needed, you may attach a new Clearance Apparatus into the existing PleuraFlow Chest Tube using standard techniques.
- If necessary, the Clearance Apparatus can be removed and the PleuraFlow Chest Tube can be connected to the drainage tubing in the standard fashion.
- Never move Clearance Wire and Loop against resistance without careful assessment of cause.
- If cause cannot be determined, move the Clearance Wire and Loop out of the PleuraFlow Chest Tube and leave it in the Guide Tube.
- Movement against resistance may result in damage to the PleuraFlow Chest Tube, which could allow the Clearance Wire and Loop to extend outside the Chest Tube.
- If the internal and external magnets become uncoupled, advance or retract the Shuttle Guide over the internal magnet to recouple. Retaining elements set on the internal magnets will keep the internal magnets and wire from exiting the Guide Tube, thus encouraging recoupling of the magnets. If after several attempts the magnets remain uncoupled, the PleuraFlow Clearance Apparatus may be disconnected from the PleuraFlow Chest Tube. The Chest Tube may then be connected to the drainage tubing and canister in the standard fashion.

PLEURAFLOW SYSTEM (CHEST TUBE AND CLEARANCE APPARATUS) REMOVAL

• Remove old dressing, sutures and/or tape.

• Grasp the PleuraFlow Chest Tube near the insertion site; using a slow, steady motion, remove the Chest Tube from the incision.

• Apply occlusive dressing after removal.

• Caution: Care should be taken during chest tube removal from the patient to avoid damaging the chest tube. Withdrawal against excessive resistance may result in chest tube damage and patient injury.

SUGGESTED PLEURAFLOW CHEST TUBE MAINTENANCE

• The PleuraFlow Chest Tube should be maintained in accordance with standard institutional protocols. Suggested PleuraFlow Chest Tube maintenance is as follows:

- Dressing Changes: Assess the dressing in the first 24 hours for accumulation of blood, fluid, or moisture beneath the dressing.
- Cleaning Exit Site: Maintain according to institution protocol.

COMPATIBILITY

• The PleuraFlow System is only compatible with PleuraFlow Chest Tubes. Compatibility with other drainage tubes has not been established.

• The PleuraFlow System is compatible with any drainage canister system.

• Refer to product label for device dimensions.

DURATION OF USE

- Maximum for PleuraFlow Chest Tube Use is 2 weeks.
- Maximum for Clearance Apparatus is 5 days.

- If the PleuraFlow Chest Tube is still needed, but the Clearance Apparatus is not, the Clearance Apparatus can be removed and discarded, and the Chest Tube left in place. The Chest Tube may then be connected to the drainage tubing and canister in the standard fashion.

WARNINGS

• Do not reuse. Discard after one use. **Caution:** The characteristics of this device have been verified for single-use ONLY. Any attempt to re-process this device for subsequent re-use may adversely affect the integrity of the device or lead to deterioration in performance.

• PleuraFlow Chest Tubes should not be clamped except when changing the drainage canister or removing the Clearance Apparatus. Withdraw the Clearance Wire and Loop prior to clamping.

• The PleuraFlow Chest Tube should not be clamped when the Clearance Wire and Loop is advanced in the Chest Tube, as this could result in damage.

• Use only the supplied PleuraFlow Chest Tube.

• Cut the PleuraFlow Chest Tube only as indicated by the "CUT" mark on the distal end. Cutting it shorter can result in the Clearance Wire and Loop extending beyond the tip of the Chest Tube. (FIG. 2)

• Never advance the Clearance Wire and Loop against resistance without careful assessment of cause. If cause cannot be determined, withdraw the Clearance Wire and Loop into the Guide Tube or replace the PleuraFlow Chest Tube. Movement against resistance may result in damage to the PleuraFlow Chest Tube, which could allow the Clearance Wire and Loop to extend outside the PleuraFlow Chest Tube.

• Dispose of the used product in accordance with accepted medical practice and applicable local, state and federal regulations. Used product presents a potential biohazard.

• Do not place the Shuttle Guide within 6 inches of an implanted pulse generator, such as pacemakers or implantable defibrillators.

• The PleuraFlow Clearance Apparatus should be removed if in proximity to an MRI.

PRECAUTIONS

• Carefully read and follow instructions prior to using this device.
• Insertion or removal of this device is only to be done by qualified health professionals.
• Follow aseptic techniques when inserting the PleuraFlow System.
• The device must be used prior to the expiration date.

COMPLICATIONS

Inserting the PleuraFlow Chest Tube and utilizing the Clearance Apparatus may result in any of the following complications:

- Pneumothorax
- Pericardial tamponade
- Infection
- Exposure to body fluids
- Empyema
- Leakage
- Hypotension subsequent to drainage
- Skin irritation or infection
- Splenic or hepatic laceration
- Re-expansion pulmonary edema
- Occlusion
- Pain
- Hemothorax
- Chest tube malposition
- Accidental chest tube dislodgement or removal
- Tumor seeding
- Chest tube erosion through skin

HOW SUPPLIED

The PleuraFlow System is provided sterile and will remain so as long as the package is unopened and undamaged. Do not resterilize.

STORAGE

Handle with care. The System should be stored in an area with good ventilation under good conditions that protect it from extremes of temperature and humidity.

CAUTION

Federal (U.S.A.) law restricts this device to sale by or on the order of a physician

FIGURES

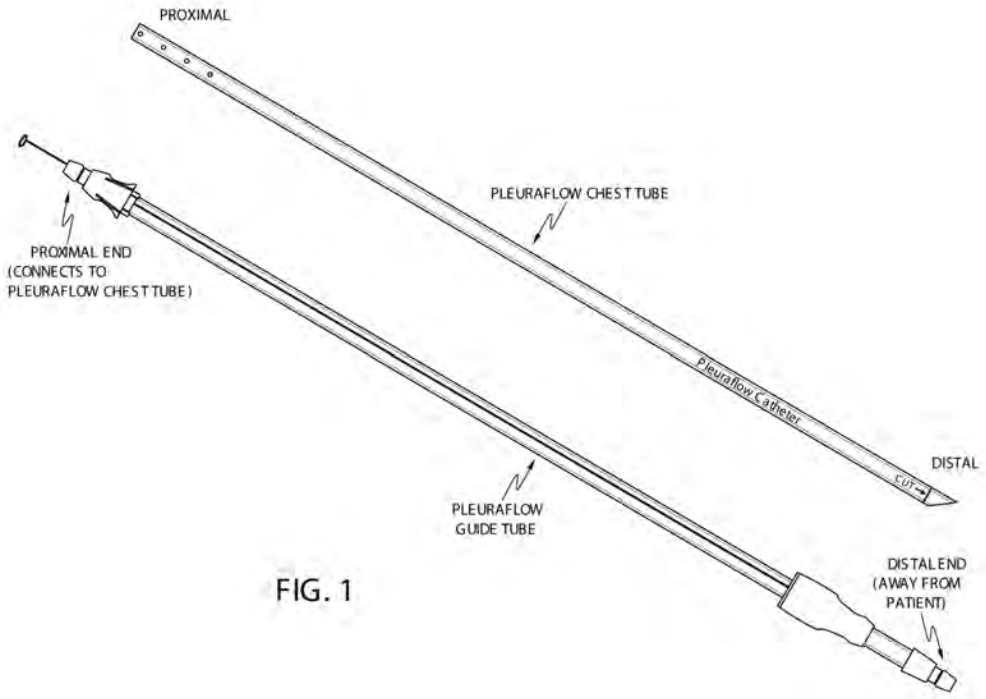

FIG. 1

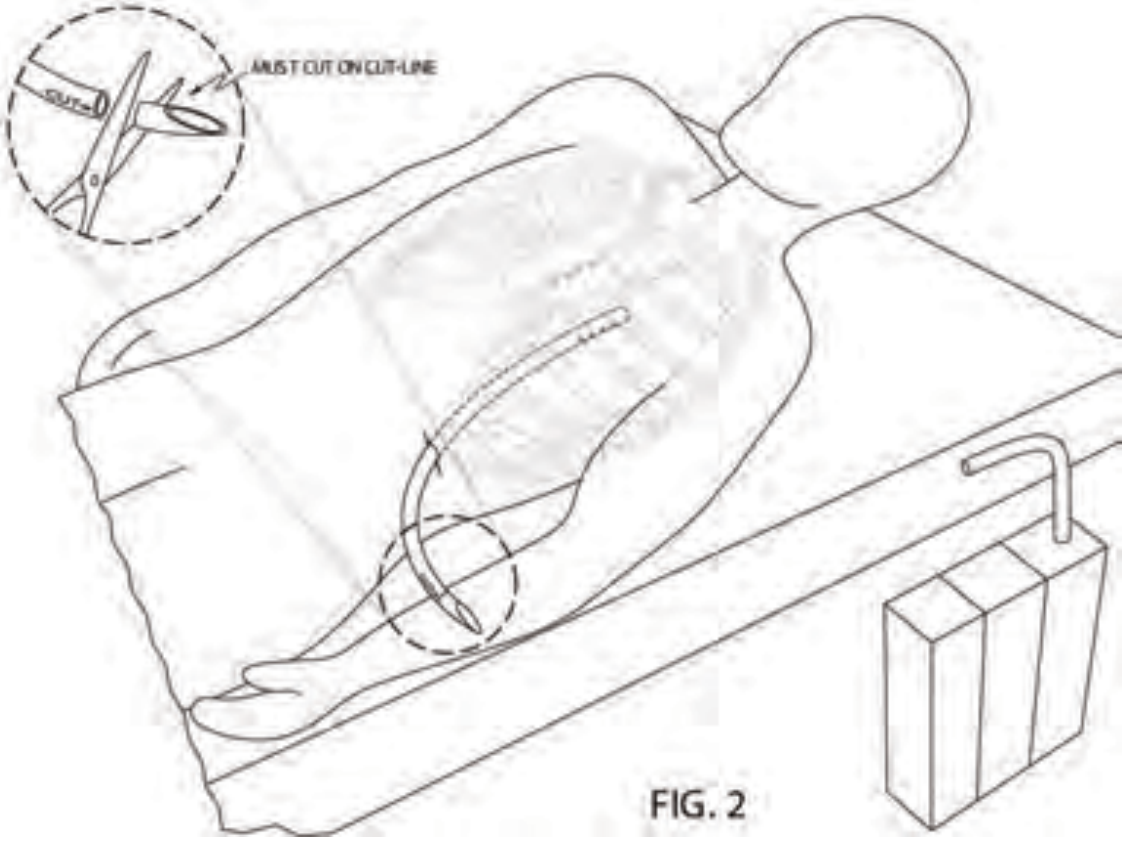

FIG. 2

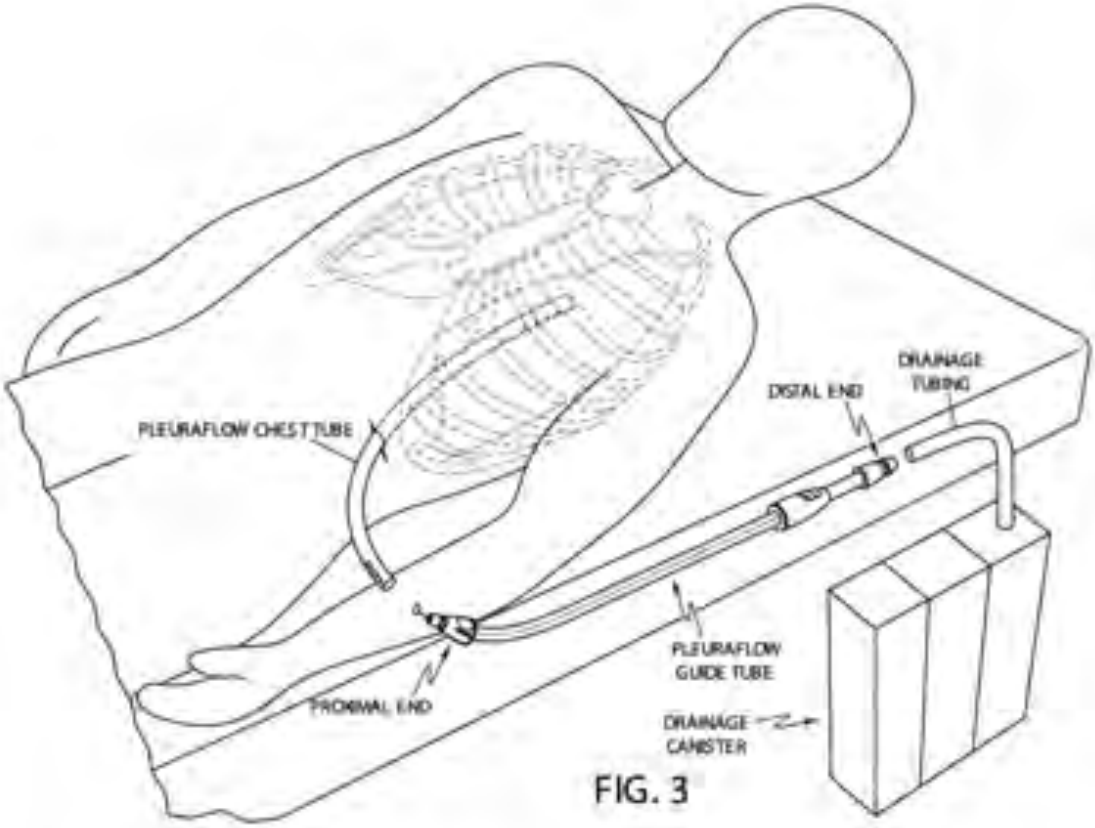
PLEURAFLOW CHEST TUBE
DISTAL END
DRAINAGE TUBING
PLEURAFLOW GUIDE TUBE
PROXIMAL END
DRAINAGE CANISTER

FIG. 3

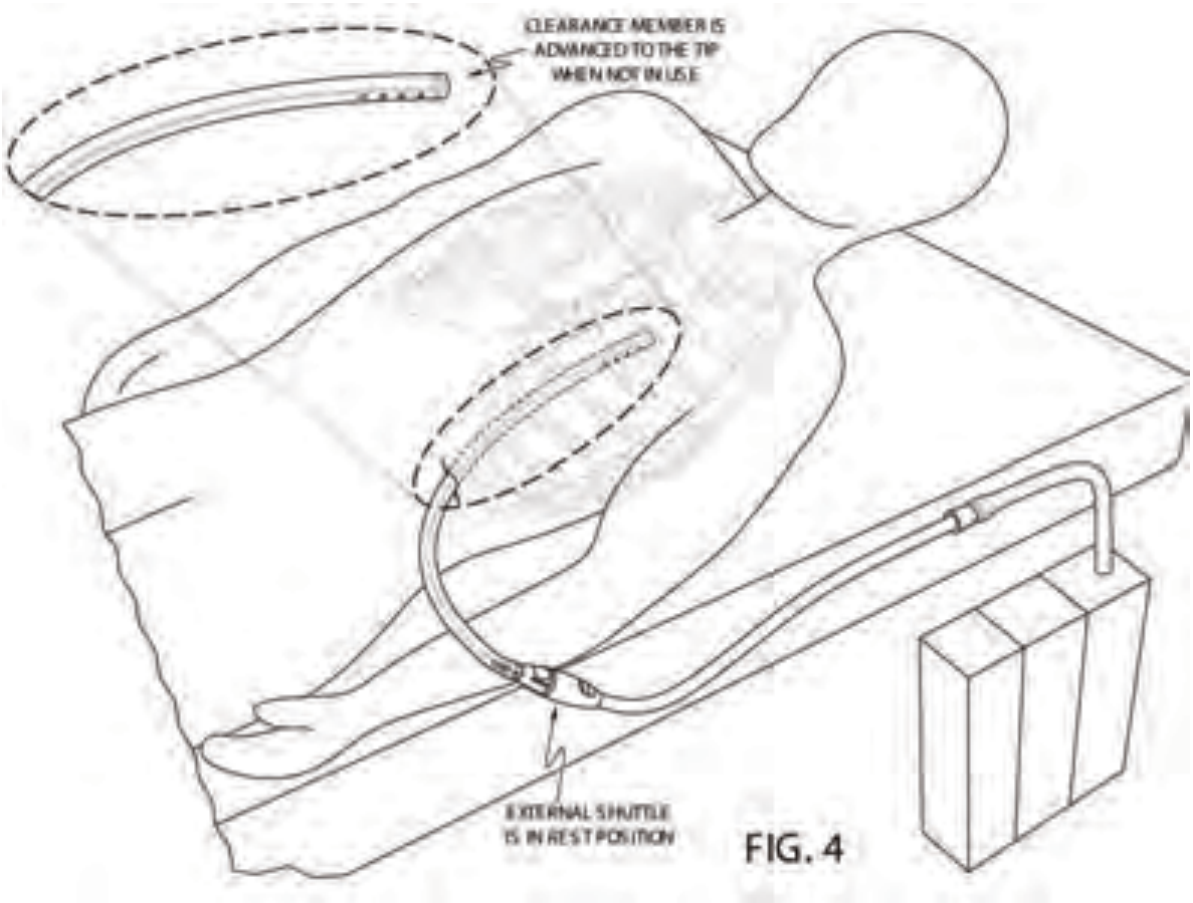
CLEARANCE MEMBER IS
ADVANCED TO THE TIP
WHEN NOT IN USE
EXTERNAL SHUTTLE
IS IN REST POSITION

FIG. 4

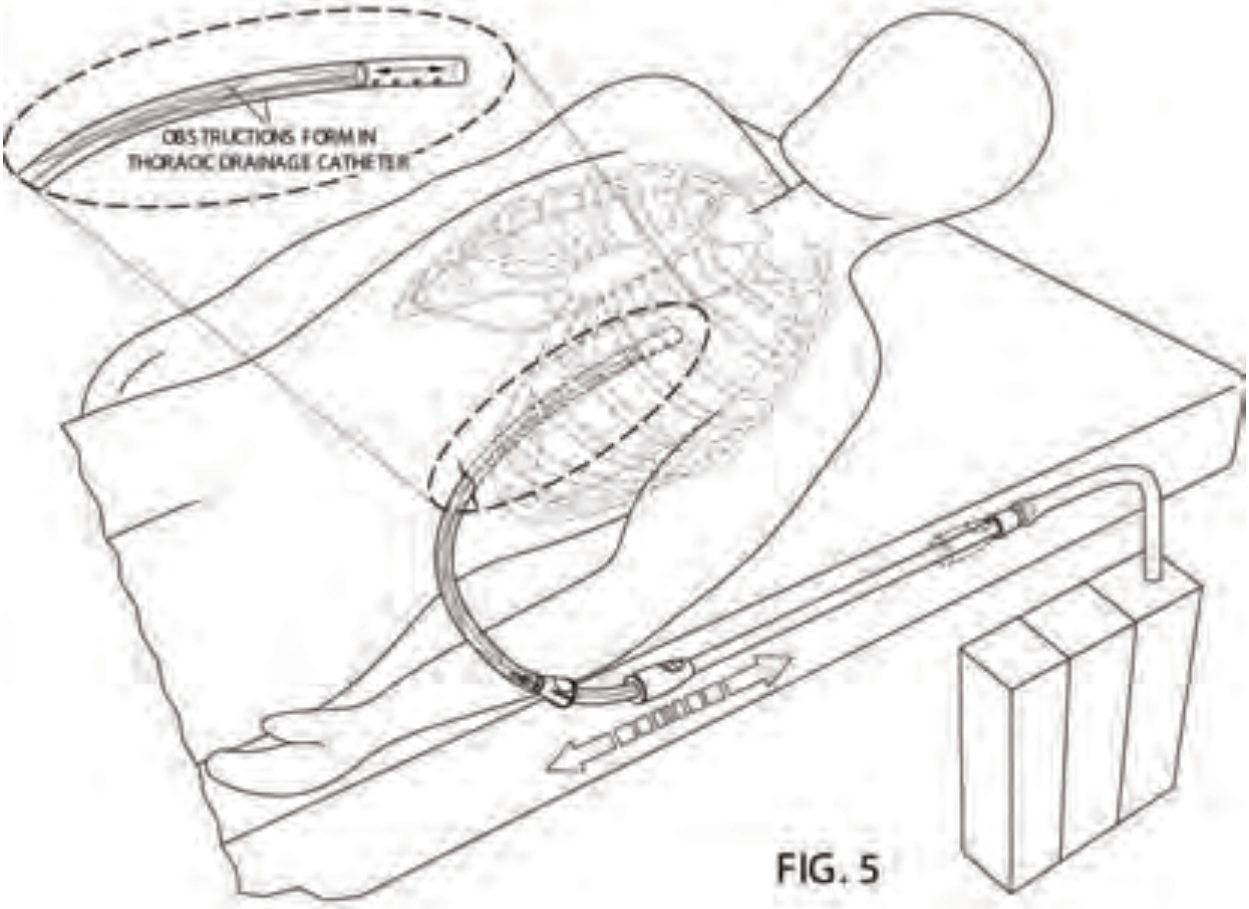

FIG. 5

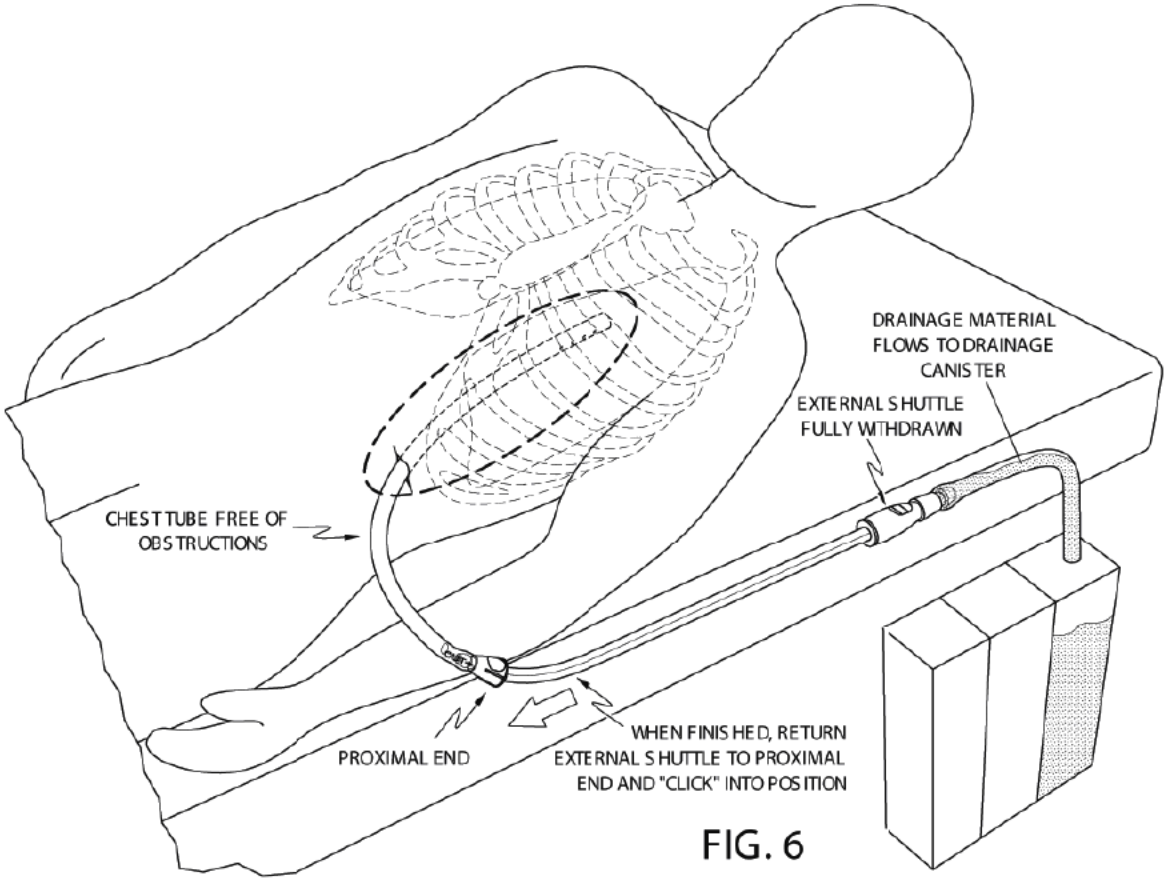
DRAINAGE MATERIAL
FLOWS TO DRAINAGE
CANISTER
EXTERNAL SHUTTLE
FULLY WITHDRAWN
CHEST TUBE FREE OF
OBSTRUCTIONS
PROXIMAL END
WHEN FINISHED, RETURN
EXTERNAL SHUTTLE TO PROXIMAL
END AND "CLICK" INTO POSITION

FIG. 6