510(k) Summary
EndoChoice Hot Biopsy Forceps

1. Company Identification

EndoChoice, Inc.
11800 Wills Road, Suite 100
Alpharetta, GA 30009
Telephone
Fax (678) 567 8218
Establishment Registration: 300759133

OCT 15 2013

2. Contact Person

Daniel Hoefer
Regulatory Affairs Manager

3. Device Name

Commercial name: *EndoChoice Hot Biopsy Forceps*
Classification name: Forceps, Biopsy, Electric

4. Device Classification

Product Code: KGE
Regulation Number: 876.4300
Class: II

5. Intended Use

EndoChoice Hot Biopsy Forceps are intended for use by trained medical professionals. The device is to be used endoscopically in conjunction with monopolar electrosurgical current to obtain gastrointestinal mucosal tissue biopsies and for removal of sessile polyps.

6. Device Description

EndoChoice Hot Biopsy Forceps is a sterile single use device designed for use in the gastrointestinal tract. A plug is located on the handle for connection to an electrosurgical unit, giving the capability to apply high frequency monopolar electrocautery during resection.

The device is compatible with endoscopic access channels of at least 2.8 mm and is provided with a working length of 230.0 cm.

Using the EndoChoice Hot Biopsy Forceps, the user can cauterize and remove tissue from the mucosal wall by using the handle to open the jaws, pressing the jaws against the site, closing, applying electrical current via a compatible electrosurgical unit (not included), and gently pulling the away from the site.

7. Substantial Equivalence

The EndoChoice Hot Biopsy Forceps is substantially equivalent to the Radial Jaw 4™ Hot Biopsy Forceps (K101657) manufactured by Boston Scientific Corporation.

The devices are equivalent in terms of intended use, operating principle, technology, energy used, packaging, and materials.

8. Non-Clinical testing

Testing includes:

- Bench testing of the functional performance,
- biocompatibility testing,
- sterility assurance validation,
- shelf life testing,
- electrical safety testing for high frequency surgical accessories.

Results demonstrate that the device is safe and effective in meeting user requirements in accordance with its intended use.

9. Conclusion

The EndoChoice Hot Biopsy Forceps is substantially equivalent to the predicate device listed above.

DEPARTMENT OF HEALTH & HUMAN SERVICES

Public Health Service

Food and Drug Administration
10903 New Hampshire Avenue
Document Control Center – WO66-G609
Silver Spring, MD 20993-0002

October 15, 2013

EndoChoice, Inc.
% Daniel Hoefer
Regulatory Affairs Manager
11810 Wills Road
Alpharetta, GA 30009

Re: K131991
Trade/Device Name: EndoChoice Hot Biopsy Forceps
Regulation Number: 21 CFR§ 876.4300
Regulation Name: Endoscopic electrosurgical unit and accessories
Regulatory Class: II
Product Code: KGE
Dated: August 19, 2013
Received: August 20, 2013

Dear Daniel Hoefer,

We have reviewed your Section 510(k) premarket notification of intent to market the device referenced above and have determined the device is substantially equivalent (for the indications for use stated in the enclosure) to legally marketed predicate devices marketed in interstate commerce prior to May 28, 1976, the enactment date of the Medical Device Amendments, or to devices that have been reclassified in accordance with the provisions of the Federal Food, Drug, and Cosmetic Act (Act) that do not require approval of a premarket approval application (PMA). You may, therefore, market the device, subject to the general controls provisions of the Act. The general controls provisions of the Act include requirements for annual registration, listing of devices, good manufacturing practice, labeling, and prohibitions against misbranding and adulteration. Please note: CDRH does not evaluate information related to contract liability warranties. We remind you, however, that device labeling must be truthful and not misleading.

If your device is classified (see above) into either class II (Special Controls) or class III (PMA), it may be subject to additional controls. Existing major regulations affecting your device can be found in the Code of Federal Regulations, Title 21, Parts 800 to 898. In addition, FDA may publish further announcements concerning your device in the Federal Register.

Please be advised that FDA's issuance of a substantial equivalence determination does not mean that FDA has made a determination that your device complies with other requirements of the Act or any Federal statutes and regulations administered by other Federal agencies.
You must comply with all the Act's requirements, including, but not limited to: registration and listing (21 CFR Part 807); labeling (21 CFR Part 801); medical device reporting (reporting of

medical device-related adverse events) (21 CFR 803); good manufacturing practice requirements as set forth in the quality systems (QS) regulation (21 CFR Part 820); and if applicable, the electronic product radiation control provisions (Sections 531-542 of the Act); 21 CFR 1000-1050.

If you desire specific advice for your device on our labeling regulation (21 CFR Part 801), please go to http://www.fda.gov/AboutFDA/CentersOffices/CDRH/CDRHOffices/ucm115809.htm for the Center for Devices and Radiological Health's (CDRH's) Office of Compliance. Also, please note the regulation entitled, "Misbranding by reference to premarket notification" (21CFR Part 807.97). For questions regarding the reporting of adverse events under the MDR regulation (21 CFR Part 803), please go to http://www.fda.gov/MedicalDevices/Safety/ReportaProblem/default.htm for the CDRH's Office of Surveillance and Biometrics/Division of Postmarket Surveillance.

You may obtain other general information on your responsibilities under the Act from the Division of Small Manufacturers, International and Consumer Assistance at its toll-free number (800) 638-2041 or (301) 796-7100 or at its Internet address http://www.fda.gov/MedicalDevices/ResourcesforYou/Industry/default.htm.

Sincerely yours,

Benjamin R. Fisher -S

Benjamin R. Fisher, Ph.D.
Director
Division of Reproductive, Gastro-Renal,
and Urological Devices
Office of Device Evaluation
Center for Devices and Radiological Health

Enclosure

Indications for Use

510(k) Number (if known): K131991

Device Name: EndoChoice Hot Biopsy Forceps

Indications for Use:

EndoChoice Hot Biopsy forceps are indicated for endoscopic use in in conjunction with monopolar electrosurgical current to obtain gastrointestinal mucosal tissue biopsies and for removal of sessile polyps.

Prescription Use ✓ (Part 21 CFR 801 Subpart D) AND/OR Over-The-Counter Use _____ (21 CFR 807 Subpart C)

(PLEASE DO NOT WRITE BELOW THIS LINE-CONTINUE ON ANOTHER PAGE IF NEEDED)

Concurrence of CDRH, Office of In Vitro Diagnostic Devices (OIVD)

Benjamin R. Fisher -S
2013.10.15 10:41:30 -04'00'

DEPARTMENT OF HEALTH & HUMAN SERVICES

Public Health Service

Food and Drug Administration
10903 New Hampshire Avenue
Document Control Center – WO66-G609
Silver Spring, MD 20993-0002

October 15, 2013

EndoChoice, Inc.
% Daniel Hoefer
Regulatory Affairs Manager
11810 Wills Road
Alpharetta, GA 30009

Re: K131991
Trade/Device Name: EndoChoice Hot Biopsy Forceps
Regulation Number: 21 CFR§ 876.4300
Regulation Name: Endoscopic electrosurgical unit and accessories
Regulatory Class: II
Product Code: KGE
Dated: August 19, 2013
Received: August 20, 2013

Dear Daniel Hoefer,

We have reviewed your Section 510(k) premarket notification of intent to market the device referenced above and have determined the device is substantially equivalent (for the indications for use stated in the enclosure) to legally marketed predicate devices marketed in interstate commerce prior to May 28, 1976, the enactment date of the Medical Device Amendments, or to devices that have been reclassified in accordance with the provisions of the Federal Food, Drug, and Cosmetic Act (Act) that do not require approval of a premarket approval application (PMA). You may, therefore, market the device, subject to the general controls provisions of the Act. The general controls provisions of the Act include requirements for annual registration, listing of devices, good manufacturing practice, labeling, and prohibitions against misbranding and adulteration. Please note: CDRH does not evaluate information related to contract liability warranties. We remind you, however, that device labeling must be truthful and not misleading.

If your device is classified (see above) into either class II (Special Controls) or class III (PMA), it may be subject to additional controls. Existing major regulations affecting your device can be found in the Code of Federal Regulations, Title 21, Parts 800 to 898. In addition, FDA may publish further announcements concerning your device in the Federal Register.

Please be advised that FDA's issuance of a substantial equivalence determination does not mean that FDA has made a determination that your device complies with other requirements of the Act or any Federal statutes and regulations administered by other Federal agencies.
You must comply with all the Act's requirements, including, but not limited to: registration and listing (21 CFR Part 807); labeling (21 CFR Part 801); medical device reporting (reporting of

medical device-related adverse events) (21 CFR 803); good manufacturing practice requirements as set forth in the quality systems (QS) regulation (21 CFR Part 820); and if applicable, the electronic product radiation control provisions (Sections 531-542 of the Act); 21 CFR 1000-1050.

If you desire specific advice for your device on our labeling regulation (21 CFR Part 801), please go to http://www.fda.gov/AboutFDA/CentersOffices/CDRH/CDRHOffices/ucm115809.htm for the Center for Devices and Radiological Health's (CDRH's) Office of Compliance. Also, please note the regulation entitled, "Misbranding by reference to premarket notification" (21CFR Part 807.97). For questions regarding the reporting of adverse events under the MDR regulation (21 CFR Part 803), please go to http://www.fda.gov/MedicalDevices/Safety/ReportaProblem/default.htm for the CDRH's Office of Surveillance and Biometrics/Division of Postmarket Surveillance.

You may obtain other general information on your responsibilities under the Act from the Division of Small Manufacturers, International and Consumer Assistance at its toll-free number (800) 638-2041 or (301) 796-7100 or at its Internet address http://www.fda.gov/MedicalDevices/ResourcesforYou/Industry/default.htm.

Sincerely yours,

Benjamin R. Fisher -S

Benjamin R. Fisher, Ph.D.
Director
Division of Reproductive, Gastro-Renal,
and Urological Devices
Office of Device Evaluation
Center for Devices and Radiological Health

Enclosure

Concurrence & Template History Page
[THIS PAGE IS INCLUDED IN IMAGE COPY ONLY]

Full Submission Number: **K131991/S001 – EndoChoice, Inc**

For Office of Compliance Contact Information:

http://insideportlets.fda.gov:9010/portal/page?_pageid=197,415881&_dad=portal&_schema=PORTAL&org=318

For Office of Surveillance and Biometrics Contact Information:

http://insideportlets.fda.gov:9010/portal/page?_pageid=197,415881&_dad=portal&_schema=PORTAL&org=423

Digital Signature Concurrence Table	
Reviewer Sign-Off	Mary E O'Brien 2013.10.15 09:54:04 -04'00'
Branch Chief Sign-Off	Glenn B. Bell -S 2013.10.15 10:33:52 -04'00'
Division Sign-Off	Benjamin R. Fisher -S 2013.10.15 10:42:50 -04'00'

Template Name: K1(A) – SE after 1996

Template History:

Date of Update	By	Description of Update
7/27/09	Brandi Stuart	Added Updates to Boiler Table
8/7/09	Brandi Stuart	Updated HFZ Table
1/11/10	Diane Garcia	Liability/Warranty sentence added at bottom of 1st page
10/4/11	M. McCabe Janicki	Removed IFU sheet and placed in Forms
9/25/12	Edwena Jones	Added digital signature format

cc: DCC – sign-off & original
ODE/DRGUD/ULDB – (Mary Beth O'Brien)

Final: KAS:kas:clr:10/11/2013

Indications for Use

510(k) Number (if known): K131991

Device Name: EndoChoice Hot Biopsy Forceps

Indications for Use:

EndoChoice Hot Biopsy forceps are indicated for endoscopic use in in conjunction with monopolar electrosurgical current to obtain gastrointestinal mucosal tissue biopsies and for removal of sessile polyps.

Prescription Use ✓ (Part 21 CFR 801 Subpart D) AND/OR Over-The-Counter Use _____ (21 CFR 807 Subpart C)

(PLEASE DO NOT WRITE BELOW THIS LINE-CONTINUE ON ANOTHER PAGE IF NEEDED)

Concurrence of CDRH, Office of In Vitro Diagnostic Devices (OIVD)

Benjamin R. Fisher -S
2013.10.15 10:41:30 -04'00'

4

ENDOCHOICE

K131991

FDA CDRH DMC
JUL 03 2013
Received

July 2, 2013

U.S. Food and Drug Administration
Center for Devices and Radiological Health
Document Mail Center – WO66-G609
10903 New Hampshire Avenue
Silver Spring, MD 20993-00002

RE: K131991, Replacement E-copy

Dear Sir/Madam:

In accordance with section 510(k) of the Federal Food, Drug, and Cosmetic Act, EndoChoice, Inc. is submitting the enclosed replacement e-copy of the Traditional 510(k) Notification for a new device (21 CFR 807.90(e)),the EndoChoice Hot Biopsy Forceps.

The attached includes one **replacement electronic copy**, which was produced in accordance with FDA e-copy guidance and is an exact duplicate of the paper copy

Please direct correspondence concerning this submission to me at the contact information provided below.

Sincerely,

Daniel Hoefer
Regulatory Affairs Manager
EndoChoice, Inc.
Telephone (678) 708 4743
Fax (678) 567 8218
e-mail daniel.hoefer@endochoice.com

Enclosure (1)

ENDOCHOICE

K131991

FDA CDRH DMC
JUN 28 2013
Received

June 26, 2013

U.S. Food and Drug Administration
Center for Devices and Radiological Health
Document Mail Center – WO66-G609
10903 New Hampshire Avenue
Silver Spring, MD 20993-00002

RE: Premarket Notification 510(k) for ENDOCHOICE HOT BIOPSY FORCEPS

Dear Sir/Madam:

In accordance with section 510(k) of the Federal Food, Drug, and Cosmetic Act, EndoChoice, Inc. is submitting the enclosed Traditional 510(k) Notification for a new device (21 CFR 807.90(e)),the EndoChoice Hot Biopsy Forceps.

This submission includes two full copies, one original paper copy and one electronic copy, which was produced in accordance with FDA e-copy guidance and is an exact duplicate of the paper copy. As required by MDUFMA of 2002, a copy of the Medical Device User Fee Cover Sheet is attached to this application.

Presented below is a summary of applicable information related to this submission. Detailed information is provided in Volumes 4 to 20 of this submission.

Applicant:	EndoChoice, Inc. 11800 Wills Road, Suite 100 Alpharetta, GA 30009 Fax (678) 567 8218
Establishment Registration:	300759133
Trade Name:	EndoChoice Hot Biopsy Forceps
Classification:	**Name:** Forceps, Biopsy, Electric **Product Code:** KGE **Regulation No.:** 876.4300 **Class:** 2 **Review Panel:** Gastroenterology/Urology

Portions of the pre-market notification, such as labeling, technical specifications and intent to market, which are not already in the public domain, are considered confidential and proprietary to EndoChoice,

Inc. As such this information should not be made available to the public under the Freedom of Information Act or regulations promulgated thereunder.

Please direct correspondence concerning this submission to me at the contact information provided below.

Sincerely,

Daniel Hoefer
Regulatory Affairs Manager
EndoChoice, Inc.
Telephone (678) 708 4743
Fax (678) 567 8218
e-mail daniel.hoefer@endochoice.com

EndoChoice Hot Biopsy Forceps

EndoChoice, Inc.

Traditional 510(k) Premarket Notification

TABLE OF CONTENTS

Section 1 – Medical Device User Fee Cover Sheet (Form FDA 3601) 1-1

Section 2 – CDRH Premarket Review Submission Cover Sheet 2-1

Section 3 – 510(k) Cover Letter 3-1

Section 4 – Indications for Use statement 4-1

Section 5 – 510(k) Summary 5-1

Section 6 -- Truthful and Accuracy Statement 6-1

Section 7 – Class III Summary and Certification 7-1

Section 8 – Financial Certification or Disclosure Statement 8-1

Section 9 – Declarations of Conformity and Summary Reports 9-1

Section 10 -- Executive Summary 10-1

Section 11 – Device Description 11-1

Attachment 11-1 Materials Specification

Section 12 – Substantial Equivalence Discussion 12-1

Section 13 – Proposed Labeling 13-1

Attachment 13-1 Information for Use

Attachment 13-2 Label

Section 14 – Sterilization and Shelf Life 14-1

Attachment 14-1 Shelf Life Testing

Section 15 – Biocompatibility 15-1

Section 16 – Software 16-1

Section 17 – Electrical Safety and Electromagnetic Compatibility 17-1

Attachment 17-1 Medical Electrical Equipment Test Report

Section 18 – Performance Testing Bench 18-1

Attachment 18-1 Performance Validation Plan

Attachment 18-2 Performance Validation Report

Attachment 18-3 Pouch Seal Process Verification

Section 19 – Performance Testing Animal 19-1

Section 20 – Performance Testing Clinical 20-1

Screening Checklist for Traditional/Abbreviated Premarket Notification [510(k)] Submissions

based on
Guidance for Industry and FDA Staff
Format for Traditional and Abbreviated 510(k)s[2]

Title	Related Information	Present	Inadequate	N/A
MDUFMA Cover Sheet	Medical Device User Fee Cover Sheet[3]	See section 1		
CDRH Premarket Review Submission Cover Sheet	CDRH Premarket Review Submission Cover Sheet[4]	See section 2		
510(k) Cover Letter	Appendix A of "Guidance for Industry and FDA Staff Format for Traditional and Abbreviated 510(k)s" updated November 17, 2005	See Section 3		
Indications for Use Statement	Device Advice "Content of a 510(k)" Section D[5]	See Section 4		
510(k) Summary or 510(k) Statement	Device Advice "Content of a 510(k)" Section E[6]	See Section 5		
Truthful and Accuracy Statement	Device Advice "Content of a 510(k)" Section G[7]	See Section 6		
Class III Summary and Certification	Class III Summary and Certification Form[8]	See Section 7		
Financial Certification or Disclosure Statement	FORM FDA 3454, Certification: Financial Interests and Arrangements of Clinical Investigators[9] FORM FDA 3455, Disclosure: Financial Interests and Arrangements of Clinical Investigators[10] Financial Disclosure by Clinical Investigators[11]	See Section 8		
Declarations of Conformity and Summary Reports (Abbreviated 510(k)s)	Use of Standards in Substantial Equivalence Determinations[12] FDA Standards program[13] Declaration of conformity[14] Required Elements for Declaration of Conformity to Recognized Standard[15]	See Section 9		
Executive Summary	See section 10 in Chapter II of "Guidance for Industry and FDA Staff Format for Traditional and Abbreviated 510(k)s" updated November 17, 2005	See Section 10		
Device Description	See section 11 in Chapter II of "Guidance for Industry and FDA Staff Format for Traditional and Abbreviated 510(k)s" updated November 17, 2005	See Section 11		

Substantial Equivalence Discussion	Guidance on the CDRH Premarket Notification Review Program 6/30/86 (K86-3)[16]	See Section 12		
Proposed Labeling	Device Advice " Content of a 510(k)" Section H[17]	See Section 13		
Sterilization/Shelf Life	Updated 510(k) Sterility Review Guidance (K90-1)[18] For reuse of single use devices, see Guidance for Industry and FDA Staff – Medical Device User Fee and Modernization Act of 2002 Validation Data in Premarket Notification Submissions (510(k)s) for Reprocessed Single-Use Medical Devices[19]	See Section 14		
Biocompatibility	FDA Blue Book Memo, G95-1, Use of International Standard ISO-10993, "Biological Evaluation of Medical Devices Part 1: Evaluation and Testing"[20]	See Section 15		
Software	Guidance for the Content of Premarket Submissions for Software Contained in Medical Devices[21]	See Section 16		
Electromagnetic Compatibility/Electrical Safety	CDRH Medical Device Electromagnetic Compatibility Program[22] See also IEC 60601-1- 2 Medical Electrical Equipment -- Part 1: General Requirements for Safety; Electromagnetic Compatibility -- Requirements and Tests (Second Edition, 2001)	See Section 17		
Performance Testing – Bench	See section 18 in Chapter II of "Guidance for Industry and FDA Staff Format for Traditional and Abbreviated 510(k)s" updated November 17, 2005	See Section 18		
Performance Testing – Animal	See section 19 in Chapter II of "Guidance for Industry and FDA Staff Format for Traditional and Abbreviated 510(k)s" updated November 17, 2005	See Section 19		
Performance Testing – Clinical	See section 20 in Chapter II of "Guidance for Industry and FDA Staff Format for Traditional and Abbreviated 510(k)s" updated November 17, 2005 FORM FDA 3454, Certification:	See Section 20		

	Financial Interests and Arrangements of Clinical Investigators[23] FORM FDA 3455, Disclosure: Financial Interests and Arrangements of Clinical Investigators[24]			
FORM FDA 3654, Standards Data Report for 510(k)s[25]	**Standards Data Report Form – Form 3654** 1. No standard used - **No Standards Form Required** 2. Declaration of Conformity – **Yes Standards Form Required** 3. Standard but no declaration – **Yes Standards Form Required**	See Section 9		
Kit Certification	Device Advice[26]	NA		

Form Approved: OMB No. 0910-0511 Expiration Date: April 30, 2016. See Instructions for OMB Statement.

DEPARTMENT OF HEALTH AND HUMAN SERVICES FOOD AND DRUG ADMINISTRATION **MEDICAL DEVICE USER FEE COVER SHEET**	PAYMENT IDENTIFICATION NUMBER: (b)(4) Trade Secret Write the Payment Identification number on your check.

A completed cover sheet must accompany each original application or supplement subject to fees. If payment is sent by U.S. mail or courier, please include a copy of this completed form with payment. Payment and mailing instructions can be found at: http://www.fda.gov/oc/mdufma/coversheet.html

1. COMPANY NAME AND ADDRESS (include name, street address, city state, country, and post office code)	2. CONTACT NAME
ENDOCHOICE INC 18110 Wills Rd. Suite 100 Alpharetta GA 30009 US	Theron Gober 2.1 E-MAIL ADDRESS theron.gober@endochoice.com 2.2 TELEPHONE NUMBER (include Area code) 678-534-6021 2.3 FACSIMILE (FAX) NUMBER (Include Area code) 770-410-9008
1.1 EMPLOYER IDENTIFICATION NUMBER (EIN) (b)(4) Trade Secret	

3. TYPE OF PREMARKET APPLICATION (Select one of the following in each column; if you are unsure, please refer to the application descriptions at the following web site: http://www.fda.gov/oc/mdufma

Select an application type:	3.1 Select a center
[X] Premarket notification(510(k)); except for third party	[X] CDRH
[ ] 513(g) Request for Information	[ ] CBER
[ ] Biologics License Application (BLA)	3.2 Select one of the types below
[ ] Premarket Approval Application (PMA)	[X] Original Application
[ ] Modular PMA	Supplement Types:
[ ] Product Development Protocol (PDP)	[ ] Efficacy (BLA)
[ ] Premarket Report (PMR)	[ ] Panel Track (PMA, PMR, PDP)
[ ] 30-Day Notice	[ ] Real-Time (PMA, PMR, PDP)
	[ ] 180-day (PMA, PMR, PDP)

4. ARE YOU A SMALL BUSINESS? (See the instructions for more information on determining this status)

[X] YES, I meet the small business criteria and have submitted the required qualifying documents to FDA

NO, I am not a small business

4.1 If Yes, please enter your Small Business Decision Number: (b)(4) Trade Secret

5. FDA WILL NOT ACCEPT YOUR SUBMISSION IF YOUR COMPANY HAS NOT PAID AN

ESTABLISHMENT REGISTRATION FEE THAT IS DUE TO FDA. HAS YOUR COMPANY PAID ALL ESTABLISHMENT REGISTRATION FEES THAT ARE DUE TO FDA?

[X] YES (All of our establishments have registered and paid the fee, or this is our first device, and we will register and pay the fee within 30 days of FDA's approval/clearance of this device.)

[ ] NO (If "NO," FDA will not accept your submission until you have paid all fees due to FDA. This submission will not be processed; see http://www.fda.gov/cdrh/mdufma for additional information)

6. IS THIS PREMARKET APPLICATION COVERED BY ANY OF THE FOLLOWING USER FEE EXCEPTIONS? IF SO, CHECK THE APPLICABLE EXCEPTION.

[ ] This application is the first PMA submitted by a qualified small business, including any affiliates

[ ] The sole purpose of the application is to support conditions of use for a pediatric population

[ ] This biologics application is submitted under section 351 of the Public Health Service Act for a product licensed for further manufacturing use only

[ ] The application is submitted by a state or federal government entity for a device that is not to be distributed commercially

7. IS THIS A SUPPLEMENT TO A PREMARKET APPLICATION FOR WHICH FEES WERE WAIVED DUE TO SOLE USE IN A PEDIATRIC POPULATION THAT NOW PROPOSES CONDITION OF USE FOR ANY ADULT POPULATION? (If so, the application is subject to the fee that applies for an original premarket approval application (PMA).

[ ] YES [X] NO

PAPERWORK REDUCTION ACT STATEMENT

Public reporting burden for this collection of information is estimated to average 18 minutes per response, including the time for reviewing instructions, searching existing data sources, gathering and maintaining the data needed, and completing and reviewing the collection of information. Send comments regarding this burden estimate or any other aspect of this collection of information, including suggestions for reducing this burden, to the address below.

Department of Health and Human Services, Food and Drug Administration, Office of Chief Information Officer, 1350 Piccard Drive, 4th Floor Rockville, MD 20850
[Please do NOT return this form to the above address, except as it pertains to comments on the burden estimate.]

8. USER FEE PAYMENT AMOUNT SUBMITTED FOR THIS PREMARKET APPLICATION

(b)(4) Trade Secret Process

25-Jun-2013

Form FDA 3601 (01/2007)

"Close Window" Print Cover sheet

Please wait...

If this message is not eventually replaced by the proper contents of the document, your PDF viewer may not be able to display this type of document.

You can upgrade to the latest version of Adobe Reader for Windows®, Mac, or Linux® by visiting http://www.adobe.com/go/reader_download.

For more assistance with Adobe Reader visit http://www.adobe.com/go/acrreader.

Windows is either a registered trademark or a trademark of Microsoft Corporation in the United States and/or other countries. Mac is a trademark of Apple Inc., registered in the United States and other countries. Linux is the registered trademark of Linus Torvalds in the U.S. and other countries.

ENDOCHOICE

June 26, 2013

U.S. Food and Drug Administration
Center for Devices and Radiological Health
Document Mail Center – WO66-G609
10903 New Hampshire Avenue
Silver Spring, MD 20993-00002

RE: Premarket Notification 510(k) for ENDOCHOICE HOT BIOPSY FORCEPS

Dear Sir/Madam:

In accordance with section 510(k) of the Federal Food, Drug, and Cosmetic Act, EndoChoice, Inc. is submitting the enclosed Traditional 510(k) Notification for a new device (21 CFR 807.90(e)),the EndoChoice Hot Biopsy Forceps.

This submission includes two full copies, one original paper copy and one electronic copy, which was produced in accordance with FDA e-copy guidance and is an exact duplicate of the paper copy. As required by MDUFMA of 2002, a copy of the Medical Device User Fee Cover Sheet is attached to this application.

Presented below is a summary of applicable information related to this submission. Detailed information is provided in Volumes 4 to 20 of this submission.

Applicant:	EndoChoice, Inc. 11800 Wills Road, Suite 100 Alpharetta, GA 30009 Fax (678) 567 8218
Establishment Registration:	300759133
Trade Name:	EndoChoice Hot Biopsy Forceps
Classification:	**Name:** Forceps, Biopsy, Electric **Product Code:** KGE **Regulation No.:** 876.4300 **Class:** 2 **Review Panel:** Gastroenterology/Urology

Portions of the pre-market notification, such as labeling, technical specifications and intent to market, which are not already in the public domain, are considered confidential and proprietary to EndoChoice,

Inc. As such this information should not be made available to the public under the Freedom of Information Act or regulations promulgated thereunder.

Please direct correspondence concerning this submission to me at the contact information provided below.

Sincerely,

Daniel Hoefer
Regulatory Affairs Manager
EndoChoice, Inc.
Telephone (678) 708 4743
Fax (678) 567 8218
e-mail daniel.hoefer@endochoice.com

Section 4

Indications for Use

Indications for Use

510(k) Number (if known):

Device Name: EndoChoice Hot Biopsy Forceps

Indications for Use:

EndoChoice Hot Biopsy forceps are indicated for endoscopic use in in conjunction with monopolar electrosurgical current to obtain gastrointestinal mucosal tissue biopsies and for removal of sessile polyps.

Prescription Use _____ AND/OR Over-The-Counter Use _____
(Part 21 CFR 801 Subpart D) (21 CFR 807 Subpart C)

(PLEASE DO NOT WRITE BELOW THIS LINE-CONTINUE ON ANOTHER PAGE IF NEEDED)

Concurrence of CDRH, Office of In Vitro Diagnostic Devices (OIVD)

Section 5

510(k) Summary

510(k) Summary
EndoChoice Hot Biopsy Forceps

1. Company Identification

EndoChoice, Inc.
11800 Wills Road, Suite 100
Alpharetta, GA 30009
Telephone
Fax (678) 567 8218
Establishment Registration: 300759133

2. Contact Person

Daniel Hoefer
Regulatory Affairs Manager

3. Device Name

Commercial name: *EndoChoice Hot Biopsy Forceps*
Classification name: Forceps, Biopsy, Electric

4. Device Classification

Product Code: KGE
Regulation Number: 876.4300
Class: II

5. Intended Use

EndoChoice Hot Biopsy Forceps are intended for use by trained medical professionals. The device is to be used endoscopically in conjunction with monopolar electrosurgical current to obtain gastrointestinal mucosal tissue biopsies and for removal of sessile polyps.

6. Device Description

EndoChoice Hot Biopsy Forceps is a sterile single use device designed for use in the gastrointestinal tract. A plug is located on the handle for connection to an electrosurgical unit, giving the capability to apply high frequency monopolar electrocautery during resection.

The device is compatible with endoscopic access channels of at least 2.8 mm and is provided with a working length of 230.0 cm.

Using the EndoChoice Hot Biopsy Forceps, the user can cauterize and remove tissue from the mucosal wall by using the handle to open the jaws, pressing the jaws against the site, closing, applying electrical current via a compatible electrosurgical unit (not included), and gently pulling the away from the site.

7. Substantial Equivalence

The EndoChoice Hot Biopsy Forceps is substantially equivalent to the Radial Jaw 4™ Hot Biopsy Forceps (K101657) manufactured by Boston Scientific Corporation.

The devices are equivalent in terms of intended use, operating principle, technology, energy used, packaging, and materials.

8. Non-Clinical testing

Testing includes:

- Bench testing of the functional performance,
- biocompatibility testing,
- sterility assurance validation,
- shelf life testing,
- electrical safety testing for high frequency surgical accessories.

Results demonstrate that the device is safe and effective in meeting user requirements in accordance with its intended use.

9. Conclusion

The EndoChoice Hot Biopsy Forceps is substantially equivalent to the predicate device listed above.

.

Section 6

Truthful and Accurate Statement

Premarket Notification Truthful and Accuracy Statement

Pursuant to 21 CFR 807.87(k), I certify that to the best of my knowledge and belief and based upon the data and information submitted to me in the course of my responsibilities as Director of Quality and Regulatory Affairs of EndoChoice, Inc. and in reliance thereupon, the data and information submitted in this premarket notification are truthful and accurate and that no facts material for a review of the substantial equivalence of the device have been knowingly omitted.

Theron Gober
Director of Quality and Regulatory Affairs
EndoChoice, Inc.

6/26/13
Date

Premarket Notification 510(k) number

Section 7

Class III Summary and Certification

N/A – The device is not class III

Section 8

Class III Financial Disclosure

N/A – This submission does not contain any clinical data

Section 9

Declarations of Conformity and Summary Reports

1. Conformity to Accepted Standards

The EndoChoice Hot Biopsy Forceps was tested by (b)(4) Trade Secret Process [redacted]

The device was found to be in compliance with all applicable requirements of IEC 60601-1 2005 + CORR. 1 (2006) + CORR. 2 (2007). Testing was also completed for compliance with IEC 60601-2-2: 2009 Medical Electrical Equipment, Part 2-2: Particular requirements for the Safety of High Frequency Surgical Equipment; and for compliance with IEC 60601-2-18: 2009 Medical electrical equipment part 2: Particular Requirements for the Safety of Endoscopic Equipment, and the device was found to be in compliance.

The complete test report has been provided in attachment 17-1.

Form Approved: OMB No. 0910-0120; Expiration Date: 12/31/13

Department of Health and Human Services
Food and Drug Administration

STANDARDS DATA REPORT FOR 510(k)s

(To be filled in by applicant)

This report and the Summary Report Table are to be completed by the applicant when submitting a 510(k) that references a national or international standard. A separate report is required for each standard referenced in the 510(k).

TYPE OF 510(K) SUBMISSION

☒ Traditional ☐ Special ☐ Abbreviated

STANDARD TITLE [1]

IEC 60601-1 Medical Electrical Equipment - Part 1: General Requirements for Safety

Please answer the following questions	Yes	No
Is this standard recognized by FDA [2]?	☒	☐
FDA Recognition number [3]	#5-4	
Was a third party laboratory responsible for testing conformity of the device to this standard identified in the 510(k)?	☒	☐
Is a summary report [4] describing the extent of conformance of the standard used included in the 510(k)? If no, complete a summary report table.	☒	☐
Does the test data for this device demonstrate conformity to the requirements of this standard as it pertains to this device?	☒	☐
Does this standard include acceptance criteria? If no, include the results of testing in the 510(k).	☒	☐
Does this standard include more than one option or selection of tests? If yes, report options selected in the summary report table.	☐	☒
Were there any deviations or adaptations made in the use of the standard?	☐	☒
If yes, were deviations in accordance with the FDA supplemental information sheet (SIS) [5]?	☐	☐
Were deviations or adaptations made beyond what is specified in the FDA SIS? If yes, report these deviations or adaptations in the summary report table.	☐	☒
Were there any exclusions from the standard? If yes, report these exclusions in the summary report table.	☒	☐
Is there an FDA guidance [6] that is associated with this standard?	☐	☒
If yes, was the guidance document followed in preparation of this 510k?	☐	☐

Title of guidance: _____

[1] The formatting convention for the title is: [SDO] [numeric identifier] [title of standard] [date of publication]

[2] Authority [21 U.S.C. 360d], www.fda.gov/cdrh/stdsprog.html

[3] http://www.accessdata.fda.gov/scripts/cdrh/cfdocs/cfStandards/search.cfm

[4] The summary report should include: any adaptations used to adapt to the device under review (for example, alternative test methods); choices made when options or a selection of methods are descr bed; deviations from the standard; requirements not applicable to the device; and the name and address of the test laboratory or certification body involved in conformance assessment to this standard. The summary report includes information on all standards utilized during the development of the device.

[5] The supplemental information sheet (SIS) is additional information which is necessary before FDA recognizes the standard. Found at http://www.accessdata.fda.gov/scripts/cdrh/cfdocs/cfStandards/search.cfm

[6] The online search for CDRH Guidance Documents can be found at www.fda.gov/cdrh/guidance.html

PSC Graphics (301) 443-6740 EF

EXTENT OF STANDARD CONFORMANCE
SUMMARY REPORT TABLE

STANDARD TITLE
IEC 60601-1 Medical Electrical Equipment - Part 1: General Requirements for Safety

CONFORMANCE WITH STANDARD SECTIONS*

SECTION NUMBER	SECTION TITLE	CONFORMANCE?
IEC 60601-1-6	Usability	☐ Yes ☐ No ☒ N/A

TYPE OF DEVIATION OR OPTION SELECTED ❖
Exclusion

DESCRIPTION
Usability in accordance with IEC 60601-1-6 was not evaluated by the laboratory during IEC 60601-1 testing

JUSTIFICATION
The submitted samples were found to comply with all applicable requirements of the standard (page 3 of 131 of report).

SECTION NUMBER	SECTION TITLE	CONFORMANCE?
IEC 6060101-2	Electromagnetic Compatibility -- Requirements and tests	☐ Yes ☐ No ☐ N/A

TYPE OF DEVIATION OR OPTION SELECTED ❖
Exclusion

DESCRIPTION
Electromagnetic compatibility was not assessed by the laboratory during IEC 60601-1 testing

JUSTIFICATION
The submitted samples were found to comply with all applicable requirements of the standards (page 3 of 131 of report).

SECTION NUMBER	SECTION TITLE	CONFORMANCE?
		☐ Yes ☐ No ☐ N/A

TYPE OF DEVIATION OR OPTION SELECTED ❖

DESCRIPTION

JUSTIFICATION

* For completeness list all sections of the standard and indicate whether conformance is met. If a section is not applicable (N/A) an explanation is needed under "justification." Some standards include options, so similar to deviations, the option chosen needs to be described and adequately justified as appropriate for the subject device. Explanation of all deviations or description of options selected when following a standard is required under "type of deviation or option selected," "description" and "justification" on the report. More than one page may be necessary.

❖ Types of deviations can include an exclusion of a section in the standard, a deviation brought out by the FDA supplemental information sheet (SIS), a deviation to adapt the standard to the device, or any adaptation of a section.

Paperwork Reduction Act Statement

Public reporting burden for this collection of information is estimated to average 1 hour per response, including the time for reviewing instructions, searching existing data sources, gathering and maintaining the data needed, and completing and reviewing the collection of information. Send comments regarding this burden estimate or any other aspect of this collection of information, including suggestions for reducing this burden to:

Department of Health and Human Services
Food and Drug Administration
Office of Chief Information Officer
1350 Piccard Drive, Room 400
Rockville, MD 20850

An agency may not conduct or sponsor, and a person is not required to respond to, a collection of information unless it displays a currently valid OMB control number.

Form Approved: OMB No. 0910-0120; Expiration Date: 12/31/13

Department of Health and Human Services
Food and Drug Administration

STANDARDS DATA REPORT FOR 510(k)s

(To be filled in by applicant)

This report and the Summary Report Table are to be completed by the applicant when submitting a 510(k) that references a national or international standard. A separate report is required for each standard referenced in the 510(k).

TYPE OF 510(K) SUBMISSION

☒ Traditional ☐ Special ☐ Abbreviated

STANDARD TITLE [1]

Please answer the following questions	Yes	No
Is this standard recognized by FDA [2]?	☒	☐
FDA Recognition number [3]	#6-229	
Was a third party laboratory responsible for testing conformity of the device to this standard identified in the 510(k)?	☒	☐
Is a summary report [4] describing the extent of conformance of the standard used included in the 510(k)? If no, complete a summary report table.	☒	☐
Does the test data for this device demonstrate conformity to the requirements of this standard as it pertains to this device?	☒	☐
Does this standard include acceptance criteria? If no, include the results of testing in the 510(k).	☒	☐
Does this standard include more than one option or selection of tests? If yes, report options selected in the summary report table.	☐	☒
Were there any deviations or adaptations made in the use of the standard?	☐	☒
If yes, were deviations in accordance with the FDA supplemental information sheet (SIS) [5]?	☐	☐
Were deviations or adaptations made beyond what is specified in the FDA SIS? If yes, report these deviations or adaptations in the summary report table.	☐	☒
Were there any exclusions from the standard? If yes, report these exclusions in the summary report table.	☐	☒
Is there an FDA guidance [6] that is associated with this standard?	☐	☒
If yes, was the guidance document followed in preparation of this 510k?	☐	☐

Title of guidance: _____

[1] The formatting convention for the title is: [SDO] [numeric identifier] [title of standard] [date of publication]

[2] Authority [21 U.S.C. 360d], www.fda.gov/cdrh/stdsprog.html

[3] http://www.accessdata.fda.gov/scripts/cdrh/cfdocs/cfStandards/search.cfm

[4] The summary report should include: any adaptations used to adapt to the device under review (for example, alternative test methods); choices made when options or a selection of methods are descr bed; deviations from the standard; requirements not applicable to the device; and the name and address of the test laboratory or certification body involved in conformance assessment to this standard. The summary report includes information on all standards utilized during the development of the device.

[5] The supplemental information sheet (SIS) is additional information which is necessary before FDA recognizes the standard. Found at http://www.accessdata.fda.gov/scripts/cdrh/cfdocs/cfStandards/search.cfm

[6] The online search for CDRH Guidance Documents can be found at www.fda.gov/cdrh/guidance.html

EXTENT OF STANDARD CONFORMANCE
SUMMARY REPORT TABLE

STANDARD TITLE

CONFORMANCE WITH STANDARD SECTIONS*

SECTION NUMBER	SECTION TITLE	CONFORMANCE? ☐ Yes ☐ No ☐ N/A
TYPE OF DEVIATION OR OPTION SELECTED ❖		
DESCRIPTION		
JUSTIFICATION		

SECTION NUMBER	SECTION TITLE	CONFORMANCE? ☐ Yes ☐ No ☐ N/A
TYPE OF DEVIATION OR OPTION SELECTED ❖		
DESCRIPTION		
JUSTIFICATION		

SECTION NUMBER	SECTION TITLE	CONFORMANCE? ☐ Yes ☐ No ☐ N/A
TYPE OF DEVIATION OR OPTION SELECTED ❖		
DESCRIPTION		
JUSTIFICATION		

* For completeness list all sections of the standard and indicate whether conformance is met. If a section is not applicable (N/A) an explanation is needed under "justification." Some standards include options, so similar to deviations, the option chosen needs to be described and adequately justified as appropriate for the subject device. Explanation of all deviations or description of options selected when following a standard is required under "type of deviation or option selected," "description" and "justification" on the report. More than one page may be necessary.

❖ Types of deviations can include an exclusion of a section in the standard, a deviation brought out by the FDA supplemental information sheet (SIS), a deviation to adapt the standard to the device, or any adaptation of a section.

Paperwork Reduction Act Statement

Public reporting burden for this collection of information is estimated to average 1 hour per response, including the time for reviewing instructions, searching existing data sources, gathering and maintaining the data needed, and completing and reviewing the collection of information. Send comments regarding this burden estimate or any other aspect of this collection of information, including suggestions for reducing this burden to:

Department of Health and Human Services
Food and Drug Administration
Office of Chief Information Officer
1350 Piccard Drive, Room 400
Rockville, MD 20850

An agency may not conduct or sponsor, and a person is not required to respond to, a collection of information unless it displays a currently valid OMB control number.

Form Approved: OMB No. 0910-0120; Expiration Date: 12/31/13

Department of Health and Human Services
Food and Drug Administration

STANDARDS DATA REPORT FOR 510(k)s

(To be filled in by applicant)

This report and the Summary Report Table are to be completed by the applicant when submitting a 510(k) that references a national or international standard. A separate report is required for each standard referenced in the 510(k).

TYPE OF 510(K) SUBMISSION

☒ Traditional ☐ Special ☐ Abbreviated

STANDARD TITLE [1]

Please answer the following questions	Yes	No
Is this standard recognized by FDA [2]?	☒	☐
FDA Recognition number [3]	#4-187	
Was a third party laboratory responsible for testing conformity of the device to this standard identified in the 510(k)?	☒	☐
Is a summary report [4] describing the extent of conformance of the standard used included in the 510(k)? If no, complete a summary report table.	☒	☐
Does the test data for this device demonstrate conformity to the requirements of this standard as it pertains to this device?	☒	☐
Does this standard include acceptance criteria? If no, include the results of testing in the 510(k).	☒	☐
Does this standard include more than one option or selection of tests? If yes, report options selected in the summary report table.	☐	☒
Were there any deviations or adaptations made in the use of the standard?	☐	☒
If yes, were deviations in accordance with the FDA supplemental information sheet (SIS) [5]?	☐	☐
Were deviations or adaptations made beyond what is specified in the FDA SIS? If yes, report these deviations or adaptations in the summary report table.	☐	☒
Were there any exclusions from the standard? If yes, report these exclusions in the summary report table.	☐	☒
Is there an FDA guidance [6] that is associated with this standard?	☐	☒
If yes, was the guidance document followed in preparation of this 510k?	☐	☐

Title of guidance: _____

[1] The formatting convention for the title is: [SDO] [numeric identifier] [title of standard] [date of publication]

[2] Authority [21 U.S.C. 360d], www.fda.gov/cdrh/stdsprog.html

[3] http://www.accessdata.fda.gov/scripts/cdrh/cfdocs/cfStandards/search.cfm

[4] The summary report should include: any adaptations used to adapt to the device under review (for example, alternative test methods); choices made when options or a selection of methods are descr bed; deviations from the standard; requirements not applicable to the device; and the name and address of the test laboratory or certification body involved in conformance assessment to this standard. The summary report includes information on all standards utilized during the development of the device.

[5] The supplemental information sheet (SIS) is additional information which is necessary before FDA recognizes the standard. Found at http://www.accessdata.fda.gov/scripts/cdrh/cfdocs/cfStandards/search.cfm

[6] The online search for CDRH Guidance Documents can be found at www.fda.gov/cdrh/guidance.html

PSC Graphics (301) 443-6740 EF

EXTENT OF STANDARD CONFORMANCE
SUMMARY REPORT TABLE

STANDARD TITLE

CONFORMANCE WITH STANDARD SECTIONS*

SECTION NUMBER	SECTION TITLE	CONFORMANCE? ☐ Yes ☐ No ☐ N/A
TYPE OF DEVIATION OR OPTION SELECTED ❖		
DESCRIPTION		
JUSTIFICATION		

SECTION NUMBER	SECTION TITLE	CONFORMANCE? ☐ Yes ☐ No ☐ N/A
TYPE OF DEVIATION OR OPTION SELECTED ❖		
DESCRIPTION		
JUSTIFICATION		

SECTION NUMBER	SECTION TITLE	CONFORMANCE? ☐ Yes ☐ No ☐ N/A
TYPE OF DEVIATION OR OPTION SELECTED ❖		
DESCRIPTION		
JUSTIFICATION		

* For completeness list all sections of the standard and indicate whether conformance is met. If a section is not applicable (N/A) an explanation is needed under "justification." Some standards include options, so similar to deviations, the option chosen needs to be described and adequately justified as appropriate for the subject device. Explanation of all deviations or description of options selected when following a standard is required under "type of deviation or option selected," "description" and "justification" on the report. More than one page may be necessary.

❖ Types of deviations can include an exclusion of a section in the standard, a deviation brought out by the FDA supplemental information sheet (SIS), a deviation to adapt the standard to the device, or any adaptation of a section.

Paperwork Reduction Act Statement

Public reporting burden for this collection of information is estimated to average 1 hour per response, including the time for reviewing instructions, searching existing data sources, gathering and maintaining the data needed, and completing and reviewing the collection of information. Send comments regarding this burden estimate or any other aspect of this collection of information, including suggestions for reducing this burden to:

Department of Health and Human Services
Food and Drug Administration
Office of Chief Information Officer
1350 Piccard Drive, Room 400
Rockville, MD 20850

An agency may not conduct or sponsor, and a person is not required to respond to, a collection of information unless it displays a currently valid OMB control number.

Section 10

Executive Summary

1. Concise Description of Device

The EndoChoice Hot Biopsy Forceps is a single-use gastroenterology device for obtaining tissue samples or removing polyps endoscopically. The forceps cup consists of (b)(4) Trade Secret Process [redacted] The device includes a plug for connection to an electrosurgical unit.

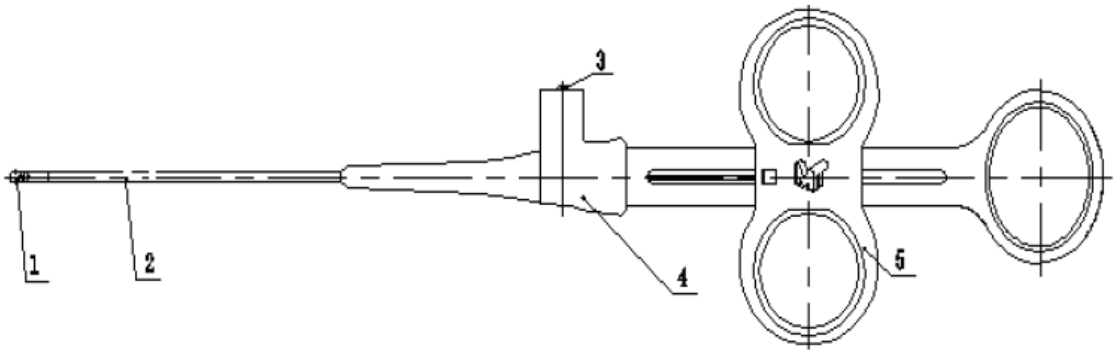

1. Cup jaws 2. Insulated Sheath 3. Plug 4. locking cap 5、slide block

Figure 1 – Device Drawing

Indications for use: EndoChoice Hot Biopsy forceps are indicated for endoscopic use in in conjunction with monopolar electrosurgical current to obtain gastrointestinal mucosal tissue biopsies and for removal of sessile polyps.

2. Comparison Table

The predicate device is Radial Jaw 4™ Hot Biopsy Forceps (K101657). A comparison of the two devices is found below.

Comparison to Predicate Device		
	EndoChoice Hot Biopsy Forceps	Radial Jaw 4™ Hot Biopsy Forceps
510(k) Number	pending	K101657 (Boston Scientific Corporation)
Product Code and Regulation number	KGE 876.4300	KGE 876.4300
Intended Use	A single-use device intended to be used endoscopically in conjunction with monopolar electrosurgical current to obtain gastrointestinal mucosal tissue biopsies and for removal of sessile polyps.	These single-use biopsy forceps are intended to be used to cauterize polyps and/or tissue specimens throughout the alimentary tract. The alimentary tract includes the esophagus, stomach, duodenum, jejunum, ileum, and colon.

Energy Used/Delivered	Electrical current from an electrosurgical unit passes through the device to the jaws, allowing the user to cauterize and remove tissue.	Electrical current from an electrosurgical unit passes through the device to the jaws, allowing the user to cauterize and remove tissue.
Materials contacting the patient	(b)(4) Trade Secret Process [redacted]	Jaws: stainless steel Insulating sheath: polymer
Anatomical Site(s)	Gastrointestinal tract	alimentary tract (includes the esophagus, stomach, duodenum, jejunum, ileum, and colon)
Sizes	Working Length: 230 cm	Working Length: 240 cm
	(b)(4) [redacted]	Jaw OD: 2.2mm
	Min. Channel Diameter 2.8 mm	Min. Channel Diameter 2.8 mm
	(b)(4) [redacted]	Jaw span: 7 mm

T d

3. Summary of Tests

The enclosed test summaries and descriptions demonstrate that device meets requirements for its intended function, materials safety, sterilization, packaging, and electrical safety.

4. Conclusion

The EndoChoice Hot Biopsy Forceps is safe and effective based on device testing, and is substantially equivalent to the predicate device described in the submission based on its design, intended use, materials, and packaging.

Section 11

Device Description

1. Overview and Diagram

The EndoChoice Hot Biopsy Forceps is a single-use gastroenterology device for obtaining tissue samples or removing polyps endoscopically. The forceps cup consists of (b)(4) Trade Secret Process [redacted] The device includes a plug for connection to an electrosurgical unit.

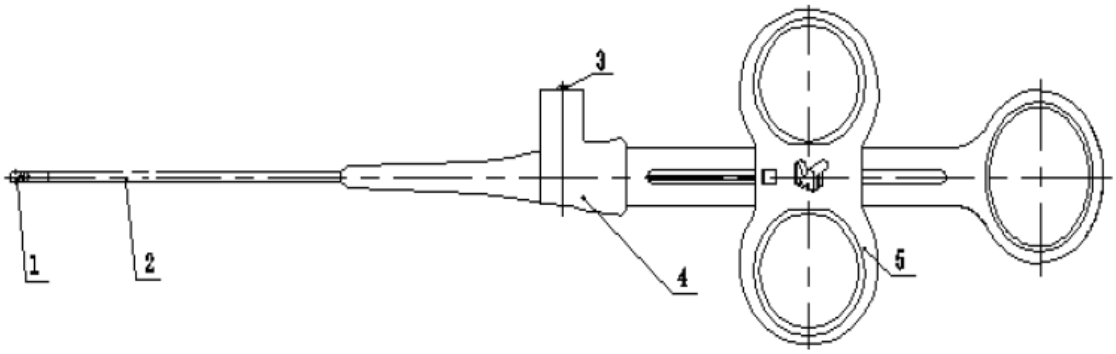

1. Cup jaws 2. Insulated Sheath 3. Plug 4. locking cap 5、slide block

Figure 1 – Device Drawing

2. Device Use

Once the area of the tissue intended for removal has been visually identified, the forceps are introduced into the accessory channel of the endoscope. After careful advancement through the channel (with the cup closed), the extended forceps are brought to the tissue site and the cup is opened using the handle (figure 2, below). The electrosurgical unit must be connected and settings prepared in accordance with manufacturer's instructions at this time.

The user applies slight pressure on the handle to close the forceps on the tissue intended for removal, the electrosurgical unit is activated, and the tissue is gently withdrawn from the mucosal wall. Once the tissue is resected, electrocautery is de-activated and the user, maintaining gentle handle pressure to keep the cups closed around the removed tissue, withdraws the forceps from the channel.

Figure 2 – Operation of the sliding handle

3. Materials

A list of all materials used in the construction of the EndoChoice Hot Biopsy Forceps is found in attachment 11-1. Patient contacting areas of the device include the forceps cups and the exterior sheath of the insulated catheter. Other exterior components include the handle and the plug. A summary of the exterior materials is tabulated below.

Component	Material Description	Type of Contact
Cup jaws	(b)(4) Trade Secret Process [redacted]	
Catheter exterior		
Handle, slide block, plug housing		
Conductive plug		

4. Other Specifications

Forceps cup

- Diameter: [redacted]
- Jaw Span: [redacted]
- Construction: [redacted]

Catheter tube

- Length: [redacted]
- Diameter [redacted]
- Minimum biopsy channel diameter: 2.8 mm

Electrical – High Frequency Voltage Ratings

- Cut: [redacted]
- Coag: [redacted]

Attachment 11-1

Materials Specification

(b)(4) Trade Secret Process - Product Specs

Section 12

Substantial Equivalence Discussion

1. Predicate Devices

The EndoChoice Hot Biopsy Forceps is compared below to the Radial Jaw 4^{tm} Hot Biopsy Forceps manufactured by Boston Scientific Corporation (K101657). The EndoChoice Hot Biopsy Forceps is substantially equivalent in intended use, indications for use, principles of operation, and technological characteristics to the predicate identified above. Any differences between the EndoChoice Hot Biopsy Forceps and the predicate device do not raise new types of safety or effectiveness issues.

2. Comparison Table

A comparison of the two devices is tabulated below.

Comparison to Predicate Device		
	EndoChoice Hot Biopsy Forceps	Radial Jaw 4^{TM} Hot Biopsy Forceps
510(k) Number	pending	K101657 (Boston Scientific Corporation)
Product Code and Regulation number	KGE 876.4300	KGE 876.4300
Intended Use	A single-use device intended to be used endoscopically in conjunction with monopolar electrosurgical current to obtain gastrointestinal mucosal tissue biopsies and for removal of sessile polyps.	These single-use biopsy forceps are intended to be used to cauterize polyps and/or tissue specimens throughout the alimentary tract. The alimentary tract includes the esophagus, stomach, duodenum, jejunum, ileum, and colon.
Energy Used/Delivered	Electrical current from an electrosurgical unit passes through the device to the jaws, allowing the user to cauterize and remove tissue.	Electrical current from an electrosurgical unit passes through the device to the jaws, allowing the user to cauterize and remove tissue.
Materials contacting the patient	Jaws: (b)(4) Trade Secret [redacted] Insulating catheter sheath: (b)(4) [redacted]	Jaws: stainless steel Insulating sheath: polymer
Anatomical Site(s)	Gastrointestinal tract	alimentary tract (includes the esophagus, stomach, duodenum, jejunum, ileum, and colon)
Sizes	Working Length: 230 cm	Working Length: 240 cm
	(b)(4) [redacted]	Jaw OD: 2.2mm
	Min. Channel Diameter 2.8 mm	Min. Channel Diameter 2.8 mm
	(b)(4) [redacted]	Jaw span: 7 mm

T d

3. Comparison Discussion

3.1. Intended Use

The indications for use of the, as shown in the table above, are equivalent. Each device is intended for removal of tissue for biopsy or polyp removal from the gastrointestinal or alimentary tract. Each device is connected to an electrosurgical unit for the purpose of providing electrocautery during tissue removal. Each device is single use, labeled as sterile, and individually packaged in a peel pouch.

3.2. Technological Characteristics

The technological characteristics of the two devices are equivalent.

Each device is designed of the same basic components, including the jaws, the catheter tube, and a "syringe type" handle, which allows the user to control the operation of the device by inserting two fingers in the handle and the thumb into a sliding component that opens and closes the jaws.

Both the EndoChoice Hot Biopsy Forceps and the predicate Radial Jaw 4^{tm} Hot Biopsy Forceps include a plug assembly for connection to an electrosurgical unit, providing conduction of current to the jaws for electrocautery.

3.3 Performance Characteristics

The steps for use of the device are equivalent. Each device is introduced endoscopically to the site of tissue removal, electrocautery is readied, the jaws are advance to the tissue and closed, electrocautery is activated, and the tissue is pulled away from the mucosal wall.

Relevant dimensions of the devices are equivalent. Both require a minimum endoscopic access channel of diameter 2.8 mm.

3.4 Conclusion

The EndoChoice Hot Biopsy Forceps and the Radial Jaw 4^{tm} Hot Biopsy Forceps manufactured by Boston Scientific Corporation are equivalent in terms of intended use, technological characteristics and performance characteristics. The devices are substantially equivalent.

Section 13

Proposed Labeling

1. Indications for Use

EndoChoice Hot Biopsy forceps are indicated for endoscopic use in in conjunction with monopolar electrosurgical current to obtain gastrointestinal mucosal tissue biopsies and for removal of sessile polyps.

See also section 4, Indications for Use Statement.

2. Instructions for Use

Instructions for Use in draft form are included as attachment 13-1. The prescription device statement and the indications for use are included in this material, which is provided in paper form with the device.

3. Device Labels

A draft device label, provided as a decal on the package, is provided in attachment 13-2.

Attachment 13-1

Instructions for Use

Instructions for Use EndoChoice Hot Biopsy Forceps

Manufactured by:
Micro-Tech (Nanjing) Co., Ltd.
USA Contact:
EndoChoice, Inc., Alpharetta, GA 30009
Tel: 888-682-ENDO (3636)/Fax: 866-567-8218

Caution: *US Federal Law restricts this device to sale by or on the order of a physician*

WARNING:

1. According to law, this instrument is intended for use by physicians who have received appropriate training.

2. For single use only. Do not reuse, reprocess or resterilize. Reuse, reprocessing or resterilization may compromise the structural integrity of the device and/or lead to device failure which in turn may result in patient injury, illness or death. Reuse, reprocessing or resterilization may also create a risk of contamination of the device and/or cause patient infection or cross-infection, including, but not limited to, the transmission of infectious disease(s) from one patient to another. Contamination of the device may lead to injury, illness or death of the patient.

3. The instrument, when applied to a patient with a pacemaker implanted, may cause malfunction or failure of the pacemaker, seriously affecting the patient. Always confirm that it is safe to proceed with a cardiologist or the manufacturer of the pacemaker before proceeding.

4. When using the instrument in the vicinity of the heart, be sure to use it with the minimum necessary output. Spark discharge during operation may affect the heart.

5. When using an electrocardiograph or other physiological monitoring equipment simultaneously with the instrument, any monitoring electrodes should be placed as far away as possible from the electrodes used with the electrodes unit. Needle monitoring electrodes should not be used. Physiological monitoring equipment incorporating high-frequency current limiting devices is recommended.

6. When the endoscopes are used with the device, the patient leakage currents may be additive.

7. Prepare monitoring equipment and rescue equipment to control unpredictable risks.

8. Failure to isolate tissue to be biopsied or polyp to be removed by pulling it away from mucosal wall may result in fulguration of normal mucosa and/or perforation.

CAUTION:

1. Before using this instrument, the operator must have received sufficient training in endoscopic manipulation and been aware of the related risks of the operation.

2. This instrument has been designed to be used with endoscopes to sampling and/or removal of polyps using high-frequency current within the digestive tract. Do not use this instrument for any purpose other than its intended use.

3. Please read this instruction manual entirely before use.

4. Refer to package label for minimum channel size required for this device.

5. Endoscope must remain as straight as possible when inserting or withdrawing forceps.

6. Forceps cups must remain closed during introduction into, advancement through, and removal from endoscope. If cups are open, damage to forceps and endoscope may occur.

7. Exercising handle while forceps is coiled may result in damage to forceps.

8. Mucosal biopsy and polypectomy should be performed under direct endoscopic visualization.

DRAFT

9. Before using this device, follow recommendations provided by electrosurgical unit manufacturer to ensure patient safety through proper placement and utilization of patient return electrode. Ensure a proper path from patient return electrode to electrosurgical unit is maintained throughout the procedure.

10. When applying current, ensure metal tip of forceps does not come in contact with endoscope. Contact of forceps tip with endoscope may result in grounding, injury to patient or operator, and damage to endoscope and/or forceps.

INDICATION FOR USE:

This device is used endoscopically in conjunction with monopolar electrosurgical current to obtain gastrointestinal mucosal tissue biopsies and for removal of sessile polyps.

CONTRAINDICATIONS

Contraindications include those specific to the primary endoscopic procedure to be performed in gaining access to the desired biopsy or polypectomy site. Contraindications to gastrointestinal mucosal biopsy and polypectomy include, but are not limited to: coagulopathy and insufficiently prepped bowel.

POTENTIAL COMPLICATIONS

Potential complications with endoscopic mucosal biopsy or polypectomy include, but are not limited to: transmural burns, thermal injury to the patient, explosion.

PRODUCT INSPECTION

1. Uncoil forceps, open and close cups, verifying smooth handle operation and cup action.

2. With electrosurgical unit off, prepare equipment. Securely connect active cord to handle and electrosurgical unit.

INSTRUCTIONS FOR USE

1. Endoscopically visualize area to be biopsied or polyp to be removed.
2. With cups closed, insert forceps into accessory channel of endoscope.
3. Advance forceps in 1-2 cm increments until it is visualized exiting endoscope.
Note: Keep end of forceps that is extending from accessory channel straight at all times. Allowing forceps to hang from accessory channel may cause damage to device.
4. Advance forceps to desired biopsy site or polyp, then open cups and advance into tissue to be biopsied or polyp to be removed.
5. Following electrosurgical unit manufacturer's instructions for settings, verify desired settings and activate electrosurgical unit.
6. Using slight pressure on handle, close forceps around tissue or polyp. Isolate tissue by gently pulling away from mucosal wall.
Caution: When applying current, ensure metal tip of forceps does not come in contact with endoscope. Contact of forceps tip with endoscope may result in grounding, injury to patient or operator, and damage to endoscope and/or forceps.
7. Maintain gentle handle pressure to keep cups closed and gently withdraw forceps from site.
8. Continue to apply slight pressure on handle and withdraw forceps from channel. While withdrawing forceps from endoscope, wipe excess secretions from cable.
9. Prepare specimen for examination per institutional guidelines.

DRAFT

10. Upon completion of procedure, turn electrosurgical unit off, disconnect active cord from handle, then dispose of device per institutional guidelines for biohazardous medical waste.

SPECIFICATIONS

Rated High-frequency Voltage:
CUT: 1600Vp(3200Vp-p)
COAG: 2300Vp(4600Vp-p)
DO NOT use higher repeated peak voltage
Compatible Electrosurgical Unit:
ERBOTOM ICC 200 high frequency electrosurgical apparatus
If used with other Electrosurgical Units, must be used within product parameters.
Compatible Working Channel:
Those endoscopes whose working channel diameter is ≥2.8mm.
Classification:
IIb in accordance with council directive 93/42/EEC
Shockproof:
Rely on the high frequency apparatus being applied. Refer to related manual.

【Name】Endochoice Hot Biopsy Forceps – single use
【Components】 Stainless steel, ABS, FEP
【Package】1pcs/unit, 10pcs/case box
【Production Date】 See packing
【Sterilization】 Sterilized by EO (ethylene oxide) gas
【Validity of the sterilization】Two years

DRAFT

SYMBOLS

	Diameter		Working length
	Compatible working channel	LOT	Lot number
REF	Catalogue Number	EC REP	EC representative
	Date Of Manufacture		Do not reuse
	Manufacturer		Caution, consult accompanying documents
STERILE EO	Sterilization by ethylene oxide		Keep away from sunlight
	Use by		Keep dry
STERILIZE	Do not resterilize	CE 1023	CE sign with the number of the notified body
	Do not use if package is damaged		

EC REP Shanghai International Holding Corp. GmbH (Europe)
Eiffestrasse 80, 20537 Hamburg Germany

Attachment 13-2

Label

[Logo and Branding Here]

EndoChoice Hot Biopsy Forceps

REF xxx-nn-nnn

2.3 mm	230 cm
2.8 mm	QTY: 1 PC

CE 0123 Rx Only STERILE EO Single-Use Only 1 LOT XXXXXXXXX YYYY-MM

EC REP Shanghai International Trading Corp. GmbH (Hamburg)
Eiffestrasse 80, 20537 Hamburg, Germany

Consult IFU YYYY-MM

Barcode Here

REF xxx-nn-nnn LOT XXXXXXXXX YYYY-MM	REF xxx-nn-nnn LOT XXXXXXXXX YYYY-MM
REF xxx-nn-nnn LOT XXXXXXXXX YYYY-MM	REF xxx-nn-nn LOT XXXXXXXXX YYYY-MM

ENDOCHOICE®
Alpharetta, GA 30009 | 888.682.3636

Manufactured for EndoChoice, Inc. in China.

QSF-383-C

Section 14

Sterilization and Shelf Life

1. Overview

The EndoChoice Hot Biopsy Forceps is a single use device labeled as sterile. The method used is Ethylene Oxide (EtO) sterilization of devices in a fixed chamber.

2. Sterilization Method

Ethylene Oxide sterilization, with sterilization cycles validated in accordance with the following standards:

(b)(4) Trade Secret Process [redacted]

3. Residual sterilant levels

(b)(4) Trade Secret Process [redacted]

4. Sterility Assurance Level

(b)(4) Trade Secret Process [redacted]

5. Packaging used to maintain sterility

(b)(4) Trade Secret Process [redacted]

6. Shelf Life

Based on accelerated aging and real-life aging testing, the shelf life of the device (b)(4) Trade Secret Process [redacted] Shelf life test report is found in attachment 14-1.

Attachment 14-1

Shelf Life Testing

(b)(4) Trade Secret Process - Testing Report

(b)(4) Trade Secret Process - Testing Report

(b)(4) Trade Secret Process - Testing Report

(b)(4) Trade Secret Process - Testing Report

(b)(4) Trade Secret Process - Testing Report

Section 15

Biocompatibility

1. Introduction

The EndoChoice Hot Biopsy Forceps is an external communicating device in contact with tissue/bone for less than 24 hours duration. (b)(4) Trade Secret Process - Testing Report [redacted]

Note: The test item in each case is the final sterilized device. (b)(4) Trade Secret Process - Testing Report [redacted]

2. Testing Summary

2.1 (b)(4) Trade Secret Process - Testing Report [redacted]

2.2 (b)(4) Trade Secret Process - Testing Report [redacted]

2.3 (b)(4) Trade Secret Process - Testing Report [redacted]

Attachment 15-1

Biocompatibility:

(b)(4) Trade Secret
Process - Testing Report

(b)(4) Trade Secret Process - Testing Report

(b)(4) Trade Secret Process - Testing Report

(b)(4) Trade Secret Process - Testing Report

(b)(4) Trade Secret Process - Testing Report

(b)(4) Trade Secret Process - Testing Report

(b)(4) Trade Secret Process - Testing Report

(b)(4) Trade Secret Process - Testing Report

(b)(4) Trade Secret Process - Testing Report

(b)(4) Trade Secret Process - Testing Report

(b)(4) Trade Secret Process - Testing Report

(b)(4) Trade Secret Process - Testing Report

Attachment 15-2

Biocompatibility:

(b)(4) Trade Secret Process - Testing Report

(b)(4) Trade Secret Process - Testing Report

(b)(4) Trade Secret Process - Testing Report

(b)(4) Trade Secret Process - Testing Report

(b)(4) Trade Secret Process - Testing Report

(b)(4) Trade Secret Process - Testing Report

(b)(4) Trade Secret Process - Testing Report

(b)(4) Trade Secret Process - Testing Report

(b)(4) Trade Secret Process - Testing Report

(b)(4) Trade Secret Process - Testing Report

(b)(4) Trade Secret Process - Testing Report

(b)(4) Trade Secret Process - Testing Report

(b)(4) Trade Secret Process - Testing Report

Attachment 15-3

Biocompatibility:

(b)(4) Trade Secret Process - Testing Report

(b)(4) Trade Secret Process - Testing Report

(b)(4) Trade Secret Process - Testing Report

(b)(4) Trade Secret Process - Testing Report

(b)(4) Trade Secret Process - Testing Report

(b)(4) Trade Secret Process - Testing Report

(b)(4) Trade Secret Process - Testing Report

(b)(4) Trade Secret Process - Testing Report

(b)(4) Trade Secret Process - Testing Report

(b)(4) Trade Secret Process - Testing Report

Section 16

Software

N/A – The device does not include software

Section 17

Electrical Safety and Electromagnetic Compatibility

1. Safety of Endoscopic Equipment High Frequency Surgical Equipment

The EndoChoice Hot Biopsy Forceps was tested by (b)(4) Trade Secret Process - Testing Report [redacted] for compliance with IEC 60601-2-2: 2009 Medical Electrical Equipment, Part 2-2: Particular requirements for the Safety of High Frequency Surgical Equipment; and for compliance with IEC 60601-2-18: 2009 Medical electrical equipment part 2: Particular Requirements for the Safety of Endoscopic Equipment was completed.

(b)(4) Trade Secret Process - Testing Report [redacted] The complete test report has been provided in attachment 17-1.

(b)(4) Trade Secret Process - Testing Report

b)(4) Trade Secret Process - Testing Report

(b)(4) Trade Secret Process - Testing Report

(b)(4) Trade Secret Process - Testing Report

(b)(4) Trade Secret Process - Testing Report

(b)(4) Trade Secret Process - Testing Report

(b)(4) Trade Secret Process - Testing Report

(b)(4) Trade Secret Process - Testing Report

(b)(4) Trade Secret Process - Testing Report

(b)(4) Trade Secret Process - Testing Report

(b)(4) Trade Secret Process - Testing Report

(b)(4) Trade Secret Process - Testing Report

(b)(4) Trade Secret Process - Testing Report

(b)(4) Trade Secret Process - Testing Report

(b)(4) Trade Secret Process - Testing Report

(b)(4) Trade Secret Process - Testing Report

(b)(4) Trade Secret Process - Testing Report

(b)(4) Trade Secret Process - Testing Report

(b)(4) Trade Secret Process - Testing Report

(b)(4) Trade Secret Process - Testing Report

(b)(4) Trade Secret Process - Testing Report

(b)(4) Trade Secret Process - Testing Report

(b)(4) Trade Secret Process - Testing Report

(b)(4) Trade Secret Process - Testing Report

(b)(4) Trade Secret Process - Testing Report

(b)(4) Trade Secret Process - Testing Report

b)(4) Trade Secret Process - Testing Report

(b)(4) Trade Secret Process - Testing Report

(b)(4) Trade Secret Process - Testing Report

(b)(4) Trade Secret Process - Testing Report

(b)(4) Trade Secret Process - Testing Report

(b)(4) Trade Secret Process - Testing Report

(b)(4) Trade Secret Process - Testing Report

(b)(4) Trade Secret Process - Testing Report

(b)(4) Trade Secret Process - Testing Report

(b)(4) Trade Secret Process - Testing Report

(b)(4) Trade Secret Process - Testing Report

(b)(4) Trade Secret Process - Testing Report

b)(4) Trade Secret Process - Testing Report

(b)(4) Trade Secret Process - Testing Report

(b)(4) Trade Secret Process - Testing Report

(b)(4) Trade Secret Process - Testing Report

(b)(4) Trade Secret Process - Testing Report

(b)(4) Trade Secret Process - Testing Report

b)(4) Trade Secret Process - Testing Report

(b)(4) Trade Secret Process - Testing Report

b)(4) Trade Secret Process - Testing Report

(b)(4) Trade Secret Process - Testing Report

b)(4) Trade Secret Process - Testing Report

(b)(4) Trade Secret Process - Testing Report

b)(4) Trade Secret Process - Testing Report

(b)(4) Trade Secret Process - Testing Report

(b)(4) Trade Secret Process - Testing Report

(b)(4) Trade Secret Process - Testing Report

(b)(4) Trade Secret Process - Testing Report

(b)(4) Trade Secret Process - Testing Report

(b)(4) Trade Secret Process - Testing Report

(b)(4) Trade Secret Process - Testing Report

(b)(4) Trade Secret Process - Testing Report

(b)(4) Trade Secret Process - Testing Report

(b)(4) Trade Secret Process - Testing Report

(b)(4) Trade Secret Process - Testing Report

(b)(4) Trade Secret Process - Testing Report

(b)(4) Trade Secret Process - Testing Report

(b)(4) Trade Secret Process - Testing Report

(b)(4) Trade Secret Process - Testing Report

(b)(4) Trade Secret Process - Testing Report

(b)(4) Trade Secret Process - Testing Report

(b)(4) Trade Secret Process - Testing Report

(b)(4) Trade Secret Process - Testing Report

b)(4) Trade Secret Process - Testing Report

(b)(4) Trade Secret Process - Testing Report

b)(4) Trade Secret Process - Testing Report

(b)(4) Trade Secret Process - Testing Report

b)(4) Trade Secret Process - Testing Report

(b)(4) Trade Secret Process - Testing Report

(b)(4) Trade Secret Process - Testing Report

(b)(4) Trade Secret Process - Testing Report

(b)(4) Trade Secret Process - Testing Report

(b)(4) Trade Secret Process - Testing Report

(b)(4) Trade Secret Process - Testing Report

(b)(4) Trade Secret Process - Testing Report

(b)(4) Trade Secret Process - Testing Report

(b)(4) Trade Secret Process - Testing Report

(b)(4) Trade Secret Process - Testing Report

(b)(4) Trade Secret Process - Testing Report

(b)(4) Trade Secret Process - Testing Report

(b)(4) Trade Secret Process - Testing Report

(b)(4) Trade Secret Process - Testing Report

(b)(4) Trade Secret Process - Testing Report

(b)(4) Trade Secret Process - Testing Report

(b)(4) Trade Secret Process - Testing Report

(b)(4) Trade Secret Process - Testing Report

(b)(4) Trade Secret Process - Testing Report

b)(4) Trade Secret Process - Testing Report

(b)(4) Trade Secret Process - Testing Report

b)(4) Trade Secret Process - Testing Report

(b)(4) Trade Secret Process - Testing Report

b)(4) Trade Secret Process - Testing Report

(b)(4) Trade Secret Process - Testing Report

b)(4) Trade Secret Process - Testing Report

(b)(4) Trade Secret Process - Testing Report

(b)(4) Trade Secret Process - Testing Report

(b)(4) Trade Secret Process - Testing Report

(b)(4) Trade Secret Process - Testing Report

(b)(4) Trade Secret Process - Testing Report

(b)(4) Trade Secret Process - Testing Report

(b)(4) Trade Secret Process - Testing Report

IEC 60601-1			
Clause	Requirement + Test	Result - Remark	Verdict

9.8.4.1	RM RESULTS TABLE: Systems with mechanical protective devices - General		N/A
Clause of ISO 14971	Document Ref. in RMF (Document No. & paragraph)	Result - Remarks	Verdict
6.3			
6.4			
6.5			

9.8.4.3	RM RESULTS TABLE: Mechanical protective device for single activation		N/A
Clause of ISO 14971	Document Ref. in RMF (Document No. & paragraph)	Result - Remarks	Verdict
4.3		Electrode only, relevant risks need to be evaluated with final system.	
4.4			
5			
6.2			
6.3			
6.4			
6.5			

9.8.5	RM RESULTS TABLE: Systems without mechanical protective devices		N/A
Clause of ISO 14971	Document Ref. in RMF (Document No. & paragraph)	Result - Remarks	Verdict
4.3		Electrode only, relevant risks need to be evaluated with final system.	
4.4			
5			
6.2			
6.3			
6.4			
6.5			

10.1.1	TABLE: Measurement of X - radiation		N/A
Maximum allowable radiation pA/kg (μSv/h) (mR/h)		36 (5 μSv/h) (0.5 mR/h)	
Surface area under test Surface no./ Description[1]		Measured Radiation, pA/kg (μSv/h) (mR/h)	Remarks
1/ /			
2/ /			
3/ /			
4/ /			
5/ /			
6/ /			
7/ /			

(b)(4) Trade Secret Process - Testing Report

(b)(4) Trade Secret Process - Testing Report

(b)(4) Trade Secret Process - Testing Report

(b)(4) Trade Secret Process - Testing Report

(b)(4) Trade Secret Process - Testing Report

b)(4) Trade Secret Process - Testing Report

(b)(4) Trade Secret Process - Testing Report

(b)(4) Trade Secret Process - Testing Report

(b)(4) Trade Secret Process - Testing Report

b)(4) Trade Secret Process - Testing Report

(b)(4) Trade Secret Process - Testing Report

(b)(4) Trade Secret Process - Testing Report

(b)(4) Trade Secret Process - Testing Report

b)(4) Trade Secret Process - Testing Report

(b)(4) Trade Secret Process - Testing Report

b)(4) Trade Secret Process - Testing Report

(b)(4) Trade Secret Process - Testing Report

b)(4) Trade Secret Process - Testing Report

(b)(4) Trade Secret Process - Testing Report

(b)(4) Trade Secret Process - Testing Report

(b)(4) Trade Secret Process - Testing Report

b)(4) Trade Secret Process - Testing Report

(b)(4) Trade Secret Process - Testing Report

b)(4) Trade Secret Process - Testing Report

(b)(4) Trade Secret Process - Testing Report

b)(4) Trade Secret Process - Testing Report

(b)(4) Trade Secret Process - Testing Report

b)(4) Trade Secret Process - Testing Report

(b)(4) Trade Secret Process - Testing Report

b)(4) Trade Secret Process - Testing Report

(b)(4) Trade Secret Process - Testing Report

(b)(4) Trade Secret Process - Testing Report

(b)(4) Trade Secret Process - Testing Report

b)(4) Trade Secret Process - Testing Report

(b)(4) Trade Secret Process - Testing Report

b)(4) Trade Secret Process - Testing Report

(b)(4) Trade Secret Process - Testing Report

b)(4) Trade Secret Process - Testing Report

(b)(4) Trade Secret Process - Testing Report

b)(4) Trade Secret Process - Testing Report

(b)(4) Trade Secret Process - Testing Report

b)(4) Trade Secret Process - Testing Report

(b)(4) Trade Secret Process - Testing Report

b)(4) Trade Secret Process - Testing Report

(b)(4) Trade Secret Process - Testing Report

b)(4) Trade Secret Process - Testing Report

(b)(4) Trade Secret Process - Testing Report

b)(4) Trade Secret Process - Testing Report

(b)(4) Trade Secret Process - Testing Report

(b)(4) Trade Secret Process - Testing Report

(b)(4) Trade Secret Process - Testing Report

b)(4) Trade Secret Process - Testing Report

(b)(4) Trade Secret Process - Testing Report

b)(4) Trade Secret Process - Testing Report

(b)(4) Trade Secret Process - Testing Report

b)(4) Trade Secret Process - Testing Report

(b)(4) Trade Secret Process - Testing Report

b)(4) Trade Secret Process - Testing Report

(b)(4) Trade Secret Process - Testing Report

b)(4) Trade Secret Process - Testing Report

(b)(4) Trade Secret Process - Testing Report

Section 18

Performance Testing -- Bench

1 Overview of Performance Testing – Bench

1.1 Verification and Validation Testing

Verification and validation testing was completed at the manufacture site on three batches of thirty forceps units, covering the following areas:

(b)(4) Trade Secret Process - Testing Report

[redacted]

The verification and validation plan and the verification and validation results are included as attachments to this section (Attachment 18-1 and Attachment 18-2 respectively).

Results of the verification and validation testing indicate that the device meets its design specifications and requirements.

1.2 Sterilization validation and Shelf Life Testing

See section 14.

1.3 Packaging verification

(b)(4) Trade Secret Process - Testing Report

[redacted] Test results are found in attachment to this section (Attachment 18-3).

1.4 Biocompatibility

See section 15.

1.5 Electrical Safety and Electromagnetic Compatibility

See Section 17.

Attachment 18-1

Performance Validation Plan

(b)(4) Trade Secret Process - Testing Report

(b)(4) Trade Secret Process - Testing Report

(b)(4) Trade Secret Process - Testing Report

(b)(4) Trade Secret Process - Testing Report

(b)(4) Trade Secret Process - Testing Report

(b)(4) Trade Secret Process - Testing Report

(b)(4) Trade Secret Process - Testing Report

(b)(4) Trade Secret Process - Testing Report

(b)(4) Trade Secret Process - Testing Report

(b)(4) Trade Secret Process - Testing Report

(b)(4) Trade Secret Process - Testing Report

(b)(4) Trade Secret Process - Testing Report

(b)(4) Trade Secret Process - Testing Report

(b)(4) Trade Secret Process - Testing Report

(b)(4) Trade Secret Process - Testing Report

Attachment 18-2

Performance Validation Results

(b)(4) Trade Secret Process - Testing Report

(b)(4) Trade Secret Process - Testing Report

(b)(4) Trade Secret Process - Testing Report

(b)(4) Trade Secret Process - Testing Report

(b)(4) Trade Secret Process - Testing Report

(b)(4) Trade Secret Process - Testing Report

(b)(4) Trade Secret Process - Testing Report

(b)(4) Trade Secret Process - Testing Report

(b)(4) Trade Secret Process - Testing Report

(b)(4) Trade Secret Process - Testing Report

(b)(4) Trade Secret Process - Testing Report

(b)(4) Trade Secret Process - Testing Report

(b)(4) Trade Secret Process - Testing Report

(b)(4) Trade Secret Process - Testing Report

(b)(4) Trade Secret Process - Testing Report

(b)(4) Trade Secret Process - Testing Report

(b)(4) Trade Secret Process - Testing Report

(b)(4) Trade Secret Process - Testing Report

(b)(4) Trade Secret Process - Testing Report

(b)(4) Trade Secret Process - Testing Report

(b)(4) Trade Secret Process - Testing Report

(b)(4) Trade Secret Process - Testing Report

(b)(4) Trade Secret Process - Testing Report

(b)(4) Trade Secret Process - Testing Report

(b)(4) Trade Secret Process - Testing Report

(b)(4) Trade Secret Process - Testing Report

(b)(4) Trade Secret Process - Testing Report

(b)(4) Trade Secret Process - Testing Report

(b)(4) Trade Secret Process - Testing Report

(b)(4) Trade Secret Process - Testing Report

(b)(4) Trade Secret Process - Testing Report

(b)(4) Trade Secret Process - Testing Report

(b)(4) Trade Secret Process - Testing Report

(b)(4) Trade Secret Process - Testing Report

(b)(4) Trade Secret Process - Testing Report

(b)(4) Trade Secret Process - Testing Report

(b)(4) Trade Secret Process - Testing Report

Attachment 18-3

Pouch Seal Verification Report

(b)(4) Trade Secret Process - Testing Report

(b)(4) Trade Secret Process - Testing Report

(b)(4) Trade Secret Process - Testing Report

(b)(4) Trade Secret Process - Testing Report

(b)(4) Trade Secret Process - Testing Report

(b)(4) Trade Secret Process - Testing Report

(b)(4) Trade Secret Process - Testing Report

(b)(4) Trade Secret Process - Testing Report

(b)(4) Trade Secret Process - Testing Report

(b)(4) Trade Secret Process - Testing Report

(b)(4) Trade Secret Process - Testing Report

(b)(4) Trade Secret Process - Testing Report

(b)(4) Trade Secret Process - Testing Report

(b)(4) Trade Secret Process - Testing Report

(b)(4) Trade Secret Process - Testing Report

(b)(4) Trade Secret Process - Testing Report

(b)(4) Trade Secret Process - Testing Report

(b)(4) Trade Secret Process - Testing Report

(b)(4) Trade Secret Process - Testing Report

(b)(4) Trade Secret Process - Testing Report

(b)(4) Trade Secret Process - Testing Report

(b)(4) Trade Secret Process - Testing Report

(b)(4) Trade Secret Process - Testing Report

(b)(4) Trade Secret Process - Testing Report

(b)(4) Trade Secret Process - Testing Report

(b)(4) Trade Secret Process - Testing Report

(b)(4) Trade Secret Process - Testing Report

(b)(4) Trade Secret Process - Testing Report

(b)(4) Trade Secret Process - Testing Report

(b)(4) Trade Secret Process - Testing Report

(b)(4) Trade Secret Process - Testing Report

(b)(4) Trade Secret Process - Testing Report

(b)(4) Trade Secret Process - Testing Report

Section 19

Performance Testing Animal

(b)(4) Trade Secret Process - Testing Report

[redacted]

Section 20

Performance Testing Clinical

(b)(4) Trade Secret Process - Testing Report

[redacted]

Barlow, Lenny *

From:	Barlow, Lenny *
Sent:	Friday, October 18, 2013 4:51 PM
To:	daniel.hoefer@endochoice.com
Cc:	DCCLetters
Subject:	k131991 Correspondence
Attachments:	k131991.pdf

Tracking:

Recipient	Delivery
daniel.hoefer@endochoice.com	
DCCLetters	Delivered: 10/18/2013 4:51 PM

5

COVER SHEET MEMORANDUM

Food and Drug Administration
Office of Device Evaluation &
Office of In Vitro Diagnostics and
Radiological Health

From: Reviewer Name Mary E. O'Brien, RN, MSN

Subject: 510(k) Number K131991

To: The Record

Please list CTS decision code: SE - Substantially Equivalent

☐ Refused to Accept (Note: this is considered the first review cycle. See screening checklist.)

☐ Hold (Additional Information or Telephone Hold)

☒ Final Decision (SE, SE with Limitations, NSE (select code below), Withdrawn, etc.)

Please complete the following for a final clearance decision (i.e, SE, SE with Limitations, etc.)	YES	NO
Indications for Use Page *(Attach IFU)*	X	
510(k) Summary or 510(k) Statement *(Attach Summary or Statement)*	X	
Truthful and Accurate Statement *(Must be present for a Final Decision)*	X	
Is the device Class III?		X
Does firm reference standards? (If yes, please attach Form 3654.)	X	
Is this a combination product?		X
Is this a reprocessed single use device? (See Guidance for Industry and FDA Staff - MDUFMA - Validation Data in 510(k)s for Reprocessed Single-Use Medical Devices.)		X
Is this device intended for pediatric use only?		X
Is this a prescription device? (If both prescription & OTC, check both boxes.)	X	
Is clinical data necessary to support the review of this 510(k)?		X
For United States based clinical studies only, did the application include a completed Form FDA 3674, Certification with Requirements of ClinicalTrials.gov Data Bank? (If study was conducted in the United States and Form FDA 3674 was not included or was incomplete, then applicant must be contacted to obtain completed form.)		X
Does this device include an Animal Tissue Source?		X
All Pediatric Patients age <= 21		X
Neonate/Newborn (Birth to 28 days)		X
Infant (29 days to < 2 years)		X
Child (2 years to <12 years)		X
Adolescent (12 years to <18 years)		X
Transitional Adolescent A (18 years to <21 years); Special considerations are being given to this group, different from adults age >= 21 (different device design or tesating, different protocol procedures, etc.)		X
Transitional Adolescent B (18 years to <21 years); No special considerations compared to adults >= 21 years)		X

Nanotechnology		X
Is this device subject to the Tracking Regulation? (Medical Device Tracking Guidance)		X

Regulation Number:	876.4300
Class:	II
Product Code:	KGE
Additional Product Codes:	

Digital Signature Concurrence Table
(Not all signatures may be required)

Branch Chief Sign-Off	Glenn B. Bell -S 2013.10.15 10:32:21 -04'00'
Division Sign-Off	Benjamin R. Fisher -S 2013.10.15 10:44:01 -04'00'

K131991/S001

ENDOCHOICE

Aug. 19, 2013

U.S. Food and Drug Administration
Center for Devices and Radiological Health
Document Mail Center – WO66-G609
10903 New Hampshire Avenue
Silver Spring, MD 20993-00002

FDA CDRH DMC
AUG 20 2013
Received

RE: K131991, ENDOCHOICE HOT BIOPSY FORCEPS

Dear Sir/Madam:

(b)(4) Trade Secret Process

[redacted]

Sincerely,

Daniel Hoefer
Regulatory Affairs Manager
EndoChoice, Inc.
Telephone (678) 708 4743
Fax (678) 567 8218
e-mail daniel.hoefer@endochoice.com

Enclosures

18

ENDOCHOICE

Aug. 19, 2013

U.S. Food and Drug Administration
Center for Devices and Radiological Health
Document Mail Center – WO66-G609
10903 New Hampshire Avenue
Silver Spring, MD 20993-00002

RE: K131991, ENDOCHOICE HOT BIOPSY FORCEPS

Dear Sir/Madam:

(b)(4) Trade Secret Process

[redacted]

Sincerely,

Daniel Hoefer
Regulatory Affairs Manager
EndoChoice, Inc.
Telephone (678) 708 4743
Fax (678) 567 8218
e-mail daniel.hoefer@endochoice.com

Enclosures

Section 11

Description of Device

1. Overview and Diagram

The EndoChoice Hot Biopsy Forceps is a single-use gastroenterology device for obtaining tissue samples or removing polyps endoscopically. The forceps cup consists of (b)(4) Trade Secret Process [redacted] The device includes a plug for connection to an electrosurgical unit. See also Attachment 11-2 for engineering diagram.

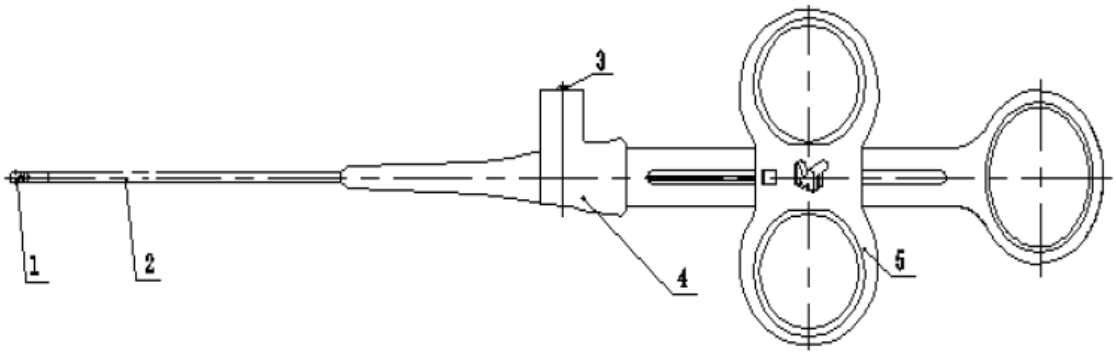

1. Cup jaws 2. Insulated Sheath 3. Plug 4. locking cap 5、slide block

Figure 1 – Device Drawing

2. Device Use

Once the area of the tissue intended for removal has been visually identified, the forceps are introduced into the accessory channel of the endoscope. After careful advancement through the channel (with the cup closed), the extended forceps are brought to the tissue site and the cup is opened using the handle (figure 2, below). The electrosurgical unit must be connected and settings prepared in accordance with manufacturer's instructions at this time.

The user applies slight pressure on the handle to close the forceps on the tissue intended for removal, the electrosurgical unit is activated, and the tissue is gently withdrawn from the mucosal wall. Once the tissue is resected, electrocautery is de-activated and the user, maintaining gentle handle pressure to keep the cups closed around the removed tissue, withdraws the forceps from the channel.

Figure 2 – Operation of the sliding handle

3. Materials

A list of all materials used in the construction of the EndoChoice Hot Biopsy Forceps is found in attachment 11-1. Patient contacting areas of the device include the forceps cups and the exterior sheath of the insulated catheter. Other exterior components include the handle and the plug. A summary of the exterior materials is tabulated below.

Component	Material Description	Type of Contact
Cup jaws	(b)(4) Trade Secret Process [redacted]	
Catheter exterior		
Handle, slide block, plug housing		
Conductive plug		

4. Other Specifications

Forceps cup

- Diameter (b)(4) [redacted]
- Jaw Span: (b)(4) [redacted]
- (b)(4) Trade Secret Process [redacted]

Catheter tube

- Length: 2300 mm
- Diameter (b)(4) [redacted]
- Minimum biopsy channel diameter: 2.8 mm

Electrical – High Frequency Voltage Ratings

- (b)(4) Trade Secret Process [redacted]

Attachment 11-1

Materials Specification

(b)(4) Trade Secret Process - Product Specs

(b)(4) Trade Secret Process - Engineering Drawing

Section 15

Biocompatibility

1. Introduction

The EndoChoice Hot Biopsy Forceps is an external communicating device in contact with tissue/bone for less than 24 hours duration. Based on ODE General Program Memorandum #G95-1 (1995), entitled Use of International Standard ISO 10993, "Biological Evaluation of Medical Devices Part 1: Evaluation and Testing," the following tests apply:

(b)(4) Trade Secret Process - Testing [redacted]

Note: The test item in each case is the final sterilized device. T(b)(4) Trade Secret Process - Testing [redacted]

2. Testing Summary

(b)(4) Trade Secret Process - Testing [redacted]

(b)(4) Trade Secret Process - Testing

[redacted]

Attachment 15-1

Biocompatibility:

(b)(4) Trade Secret Process - Testing

[redacted]

(b)(4) Trade Secret Process - Testing

(b)(4) Trade Secret Process - Testing

(b)(4) Trade Secret Process - Testing

(b)(4) Trade Secret Process - Testing

(b)(4) Trade Secret Process - Testing

(b)(4) Trade Secret Process - Testing

(b)(4) Trade Secret Process - Testing

(b)(4) Trade Secret Process - Testing

(b)(4) Trade Secret Process - Testing

(b)(4) Trade Secret Process - Testing

(b)(4) Trade Secret Process - Testing

Attachment 15-2

Biocompatibility:

(b)(4) Trade Secret Process - Testing

(b)(4) Trade Secret Process - Testing

(b)(4) Trade Secret Process - Testing

(b)(4) Trade Secret Process - Testing

(b)(4) Trade Secret Process - Testing

(b)(4) Trade Secret Process - Testing

(b)(4) Trade Secret Process - Testing

(b)(4) Trade Secret Process - Testing

(b)(4) Trade Secret Process - Testing

(b)(4) Trade Secret Process - Testing

(b)(4) Trade Secret Process - Testing

(b)(4) Trade Secret Process - Testing

(b)(4) Trade Secret Process - Testing

Attachment 15-3

Biocompatibility:

(b)(4) Trade Secret Process - Testing

(b)(4) Trade Secret Process - Testing

(b)(4) Trade Secret Process - Testing

(b)(4) Trade Secret Process - Testing

(b)(4) Trade Secret Process - Testing

(b)(4) Trade Secret Process - Testing

(b)(4) Trade Secret Process - Testing

(b)(4) Trade Secret Process - Testing

(b)(4) Trade Secret Process - Testing

(b)(4) Trade Secret Process - Testing

(b)(4) Trade Secret Process - Testing

(b)(4) Trade Secret Process - Testing

(b)(4) Trade Secret Process - Testing

(b)(4) Trade Secret Process - Testing

(b)(4) Trade Secret Process - Testing

(b)(4) Trade Secret Process - Testing

(b)(4) Trade Secret Process - Testing

(b)(4) Trade Secret Process - Testing

(b)(4) Trade Secret Process - Testing

(b)(4) Trade Secret Process - Testing

(b)(4) Trade Secret Process - Testing

(b)(4) Trade Secret Process - Testing

(b)(4) Trade Secret Process - Testing

(b)(4) Trade Secret Process - Testing

(b)(4) Trade Secret Process - Testing

(b)(4) Trade Secret Process - Testing

(b)(4) Trade Secret Process - Testing

(b)(4) Trade Secret Process - Testing

(b)(4) Trade Secret Process - Testing

(b)(4) Trade Secret Process - Testing

(b)(4) Trade Secret Process - Testing

(b)(4) Trade Secret Process - Testing

(b)(4) Trade Secret Process - Testing

(b)(4) Trade Secret Process - Testing

(b)(4) Trade Secret Process - Testing

(b)(4) Trade Secret Process - Testing

(b)(4) Trade Secret Process - Testing

(b)(4) Trade Secret Process - Testing

(b)(4) Trade Secret Process - Testing

(b)(4) Trade Secret Process - Testing

(b)(4) Trade Secret Process - Testing

(b)(4) Trade Secret Process - Testing

(b)(4) Trade Secret Process - Testing

(b)(4) Trade Secret Process - Testing

(b)(4) Trade Secret Process - Testing

(b)(4) Trade Secret Process - Testing

11.3 The original final report and a copy of any protocol amendments or deviations will be forwarded to the Sponsor.

11.4 All used and unused test article shall be disposed of by Toxikon, per Sponsor's request.

12.0 CONFIDENTIALITY AGREEMENT

Per corporate policy, confidentiality shall be maintained in general, and in specific accordance with any relevant agreement specifically executed between Toxikon and the Sponsor.

13.0 ANIMAL WELFARE STATEMENT

The Sponsor assured that, to the best of their knowledge, this study did not unnecessarily duplicate previous testing and that there were no non–animal alternatives acceptable for the evaluation of this test article as defined by the protocol.

No evidence of pain and distress was reported to the Veterinarian and/or Study Director.

Toxikon strictly adhered to the following standards in maintaining the animal care and use program:

United States Department of Agriculture (USDA), Animal and Plant Health Inspection Service, 9 CFR Ch. 1 (1/1/95 edition), Subchapter A–Animal Welfare.

"Guide for the Care and Use of Laboratory Animals," National Research Council, 2011. (NIH).

Office for Laboratory Animal Welfare (OLAW), "Public Health Service Policy on Humane Care and Use of Laboratory Animals," Health Research Extension Act of 1985 (Public Law 99–158 November 20, 1985), Reprinted 1996.

ISO 10993–2, 2006, Biological Evaluation of Medical Devices – Part 2: Animal Welfare Requirements.

Association for the Assessment and Accreditation of Laboratory Animal Care (AAALAC) International.

14.0 UNFORESEEN CIRCUMSTANCES

Any unforeseen circumstances were documented in the raw data. However, no unforeseen circumstances that affected the integrity of the study were noted.

15.0 PROTOCOL AMENDMENTS/DEVIATIONS

There were no protocol amendments or deviations. No changes to the protocol were required.

(b)(4) Trade Secret Process - Testing

(b)(4) Trade Secret Process - Testing

(b)(4) Trade Secret Process - Testing

(b)(4) Trade Secret Process - Testing

(b)(4) Trade Secret Process - Testing

(b)(4) Trade Secret Process - Testing

(b)(4) Trade Secret Process - Testing

(b)(4) Trade Secret Process - Testing

(b)(4) Trade Secret Process - Testing

(b)(4) Trade Secret Process - Testing

(b)(4) Trade Secret Process - Testing

(b)(4) Trade Secret Process - Testing

(b)(4) Trade Secret Process - Testing

(b)(4) Trade Secret Process - Testing

(b)(4) Trade Secret Process - Testing

(b)(4) Trade Secret Process - Testing

(b)(4) Trade Secret Process - Testing

(b)(4) Trade Secret Process - Testing

(b)(4) Trade Secret Process - Testing

(b)(4) Trade Secret Process - Testing

(b)(4) Trade Secret Process - Testing

(b)(4) Trade Secret Process - Testing

(b)(4) Trade Secret Process - Testing

(b)(4) Trade Secret Process - Testing

(b)(4) Trade Secret Process - Testing

(b)(4) Trade Secret Process - Testing

(b)(4) Trade Secret Process - Testing

(b)(4) Trade Secret Process - Testing

(b)(4) Trade Secret Process - Testing

(b)(4) Trade Secret Process - Testing

(b)(4) Trade Secret Process - Testing

(b)(4) Trade Secret Process - Testing

(b)(4) Trade Secret Process - Testing

(b)(4) Trade Secret Process - Testing