Records processed under FOIA Request 2011-7654; Released 1/22/13

U.S. Department of Health & Human Services

Food and Drug Administration

SAVE REQUEST

USER: (kml)

FOLDER: K110097 - 522 pages

COMPANY: ACCLARENT, INC. (ACCLARENT)

PRODUCT: NASOPHARYNGOSCOPE (FLEXIBLE OR RIGID) (EOB)

SUMMARY: Product: ACCLARENT CYCLOPS MULTI-ANGLE ENDOSCOPE

DATE REQUESTED: Jan 10, 2013

DATE PRINTED: Jan 10, 2013

Note: Printed

Questions? Contact FDA/CDRH/OCE/DID at CDRH-FOISTATUS@fda.hhs.gov or 301-796-8118

Records processed under FOIA Request 2011-7654; Released 1/22/13

K110097

Acclarent

MAY 2 7 2011

510(k) SUMMARY

Sponsor/Submitter:	Acclarent, Inc. 1525-B O'Brien Drive Menlo Park, California 94025
Contact Person:	Keri Yen Regulatory Affairs Manager Phone: (650) 687-5874 Fax: (650) 687-4449
Date of Preparation:	May 20, 2011
Device Trade Name/ Model Number:	Acclarent Cyclops Multi-Angle Endoscope CYE002
Common Name:	Endoscope
Device Classification:	Class II
Regulation Number:	21 CFR 874.4760
Classification Name:	Nasopharyngoscope (Flexible or Rigid)
Product Code:	EOB
Predicate Devices:	Acclarent Cyclops Multi-Angle Endoscope (K100577)
Device Description:	The Acclarent Cyclops Multi-Angle Endoscope is a 4mm rigid unchanneled endoscope that has the capability of varying direction of view from 10° to 90°, which is altered by the direction of view dial. The direction of view is indicated by visible markings on the scope body. Cyclops provides a 55° field of view and a depth of focus from 5 mm to 40mm. The device shaft can also rotate 320° to allow for visualization of structures without rotating the device; this is controlled by the shaft rotation dial. Small rare-earth permanent magnets are incorporated into the proximal scope control body (≤10 gauss at 2cm) and drive the change in the direction of view. A standard eyepiece located on the proximal end of the device is compatible with a standard camera coupler. The light post on the subject device is compatible with an ACMI light source. There are two stainless steel adapters that accompany the Acclarent Cyclops Multi-Angle Endoscope to facilitate connection with Wolf or Storz/Olympus medical light sources.

Questions? Contact FDA/CDRH/OCE/DID at CDRH-FOISTATUS@fda.hhs.gov or 301-796-8118

Records processed under FOIA Request 2011-7654; Released 1/22/13

The adapters connect to the light post. The Acclarent Cyclops Multi-Angle Endoscope is a reusable device and must be cleaned and sterilized according to the user manual prior to every use.

Indications for Use: The Acclarent Cyclops Multi-Angle Endoscope is intended to provide an endoscopic means to view the nasal cavity and nasopharynx in an operating room environment.

Technological Characteristics:

Attribute	Predicate Device (Acclarent Cyclops Multi-Angle Endoscope)	Subject Device (Acclarent Cyclops Multi-Angle Endoscope)
510(k) number	K100577	K110097
Model Number	CYE001	CYE002
Rigidity	Rigid	Same
Viewing Optics	Lens (Sapphire cover)	Same
Depth of View	5-45 mm	Same
Field of View	60°	55°
Direction of View	10° to 100°	10° to 90°
Shaft Body Diameter	4mm	Same
Working Length	6.89 inches (175mm)	Same
Magnetic Strength	≤10 gauss at 2cm	Same
Illumination Fibers	Glass Fibers	Same

Performance Data: Performance testing of the Acclarent Cyclops Multi-Angle Endoscope consisted of bench testing and a cadaver study. Bench testing met all acceptance criteria for attributes such as distal shaft diameter, working length, field of view, fixed focus, direction of view, rotation of view, illumination, scope resolution, dial actuation forces, temperature testing, field strength testing of magnets, electrical safety, EMC testing, durability testing, environmental conditioning, compression testing, random vibration testing, and shock (free fall drop) testing. Temperature testing consisted of attaching thermocouples at nine locations using adhesive and measuring the temperature at steady state. Test samples were connected to a 300W Xenon light source at 100% light output with both 3.5mm and 5.0mm light cables. The time to heat and time to cool was also evaluated. Clinical data was not necessary for the subject device. The performance data demonstrates that the Acclarent Cyclops Multi-Angle Endoscope performs as

Questions? Contact FDA/CDRH/OCE/DID at CDRH-FOISTATUS@fda.hhs.gov or 301-796-8118

Records processed under FOIA Request 2011-7654; Released 1/22/13

intended according to IEC 60601-2-18, IEC 60601-1-2, ISO10993-1, ISO 8600-3, ISO 8600-5.

Validated Reprocessing Methods:

- Full manual cleaning with extended enzymatic soak plus general instrument automated washer
- Pre-vacuum steam sterilization (wrapped)

In validating the above, the following standards were referenced: AAMI/ANSI ST35, AAMI TIR 12, AAMI TIR 30, and ANSI/AAMI ST79 A1/A2, ANSI/AAMI ST8, ANSI/AAMI ST81, ASTM E1766.

Summary of Substantial Equivalence:

The Acclarent Cyclops Multi-Angle Endoscope is substantially equivalent to the predicate devices as confirmed through relevant performance tests and attributes.

Questions? Contact FDA/CDRH/OCE/DID at CDRH-FOISTATUS@fda.hhs.gov or 301-796-8118

Records processed under FOIA Request 2011-7654; Released 1/22/13

DEPARTMENT OF HEALTH & HUMAN SERVICES

Public Health Service

Food and Drug Administration
10903 New Hampshire Avenue
Document Control Room –WO66-G609
Silver Spring, MD 20993-0002

MAY 27 2011

Acclarent, Inc.
c/o Ms. Keri Yen,
Regulatory Affairs Manager
1525-B O'Brien Drive
Menlo Park, CA 94025

Re: K110097
Trade/Device Name: Acclarent Cyclops Multi-Angle Endoscope (Model CYE002)
Regulation Number: 21 CFR 874.4760
Regulation Name: Nasopharyngoscope (Flexible or Rigid)
Regulatory Class: Class II
Product Code: EOB
Dated: April 26, 2011
Received: April 27, 2011

Dear Ms. Yen:

We have reviewed your Section 510(k) premarket notification of intent to market the device referenced above and have determined the device is substantially equivalent (for the indications for use stated in the enclosure) to legally marketed predicate devices marketed in interstate commerce prior to May 28, 1976, the enactment date of the Medical Device Amendments, or to devices that have been reclassified in accordance with the provisions of the Federal Food, Drug, and Cosmetic Act (Act) that do not require approval of a premarket approval application (PMA). You may, therefore, market the device, subject to the general controls provisions of the Act. The general controls provisions of the Act include requirements for annual registration, listing of devices, good manufacturing practice, labeling, and prohibitions against misbranding and adulteration. Please note: CDRH does not evaluate information related to contract liability warranties. We remind you, however, that device labeling must be truthful and not misleading.

If your device is classified (see above) into either class II (Special Controls) or class III (PMA), it may be subject to additional controls. Existing major regulations affecting your device can be found in the Code of Federal Regulations, Title 21, Parts 800 to 898. In addition, FDA may publish further announcements concerning your device in the Federal Register.

Please be advised that FDA's issuance of a substantial equivalence determination does not mean that FDA has made a determination that your device complies with other requirements of the Act or any Federal statutes and regulations administered by other Federal agencies. You must comply with all the Act's requirements, including, but not limited to: registration and listing (21 CFR Part 807); labeling (21 CFR Part 801); medical device reporting (reporting of medical

Questions? Contact FDA/CDRH/OCE/DID at CDRH-FOISTATUS@fda.hhs.gov or 301-796-8118

Records processed under FOIA Request 2011-7654; Released 1/22/13

device-related adverse events) (21 CFR 803); good manufacturing practice requirements as set forth in the quality systems (QS) regulation (21 CFR Part 820); and if applicable, the electronic product radiation control provisions (Sections 531-542 of the Act); 21 CFR 1000-1050.

If you desire specific advice for your device on our labeling regulation (21 CFR Part 801), please go to http://www.fda.gov/AboutFDA/CentersOffices/CDRH/CDRHOffices/ucm115809.htm for the Center for Devices and Radiological Health's (CDRH's) Office of Compliance. Also, please note the regulation entitled, "Misbranding by reference to premarket notification" (21CFR Part 807.97). For questions regarding the reporting of adverse events under the MDR regulation (21 CFR Part 803), please go to http://www.fda.gov/MedicalDevices/Safety/ReportaProblem/default.htm for the CDRH's Office of Surveillance and Biometrics/Division of Postmarket Surveillance.

You may obtain other general information on your responsibilities under the Act from the Division of Small Manufacturers, International and Consumer Assistance at its toll-free number (800) 638-2041 or (301) 796-7100 or at its Internet address http://www.fda.gov/MedicalDevices/ResourcesforYou/Industry/default.htm.

Sincerely yours,

Malvina B. Eydelman, M.D.
Director
Division of Ophthalmic, Neurological,
and Ear, Nose and Throat Devices
Office of Device Evaluation
Center for Devices and
Radiological Health

Enclosure

Questions? Contact FDA/CDRH/OCE/DID at CDRH-FOISTATUS@fda.hhs.gov or 301-796-8118

Records processed under FOIA Request 2011-7654; Released 1/22/13

Indications for Use

510(k) Number (if known): K110097

Device Name: Acclarent Cyclops Multi-Angle Endoscope (Model CYE002)

Indications For Use: The Acclarent Cyclops Multi-Angle Endoscope is intended to provide an endoscopic means to view the nasal cavity and nasopharynx in an operating room setting.

Prescription Use ___X____ AND/OR Over-The-Counter Use _____
(Part 21 CFR 801 Subpart D) (21 CFR 807 Subpart C)

(PLEASE DO NOT WRITE BELOW LINE-CONTINUE ON ANOTHER PAGE IF NEEDED)

Concurrence of CDRH, Office of Device Evaluation (ODE)

Susan Rudy CRNP
(Division Sign-Off)
Division of Ophthalmic, Neurological and Ear,
Nose and Throat Devices

510(k) Number K110097

Questions? Contact FDA/CDRH/OCE/DID at CDRH-FOISTATUS@fda.hhs.gov or 301-796-8118

(b) (4)

(b) (4)

(b) (4)

(b) (4)

(b) (4)

(b) (4)

Records processed under FOIA Request 2011-7654; Released 1/22/13

DEPARTMENT OF HEALTH & HUMAN SERVICES

Public Health Service

Food and Drug Administration
10903 New Hampshire Avenue
Document Control Room –WO66-G609
Silver Spring, MD 20993-0002

MAY 27 2011

Acclarent, Inc.
c/o Ms. Keri Yen,
Regulatory Affairs Manager
1525-B O'Brien Drive
Menlo Park, CA 94025

Re: K110097
Trade/Device Name: Acclarent Cyclops Multi-Angle Endoscope (Model CYE002)
Regulation Number: 21 CFR 874.4760
Regulation Name: Nasopharyngoscope (Flexible or Rigid)
Regulatory Class: Class II
Product Code: EOB
Dated: April 26, 2011
Received: April 27, 2011

Dear Ms. Yen:

We have reviewed your Section 510(k) premarket notification of intent to market the device referenced above and have determined the device is substantially equivalent (for the indications for use stated in the enclosure) to legally marketed predicate devices marketed in interstate commerce prior to May 28, 1976, the enactment date of the Medical Device Amendments, or to devices that have been reclassified in accordance with the provisions of the Federal Food, Drug, and Cosmetic Act (Act) that do not require approval of a premarket approval application (PMA). You may, therefore, market the device, subject to the general controls provisions of the Act. The general controls provisions of the Act include requirements for annual registration, listing of devices, good manufacturing practice, labeling, and prohibitions against misbranding and adulteration. Please note: CDRH does not evaluate information related to contract liability warranties. We remind you, however, that device labeling must be truthful and not misleading.

If your device is classified (see above) into either class II (Special Controls) or class III (PMA), it may be subject to additional controls. Existing major regulations affecting your device can be found in the Code of Federal Regulations, Title 21, Parts 800 to 898. In addition, FDA may publish further announcements concerning your device in the Federal Register.

Please be advised that FDA's issuance of a substantial equivalence determination does not mean that FDA has made a determination that your device complies with other requirements of the Act or any Federal statutes and regulations administered by other Federal agencies. You must comply with all the Act's requirements, including, but not limited to: registration and listing (21 CFR Part 807); labeling (21 CFR Part 801); medical device reporting (reporting of medical

Questions? Contact FDA/CDRH/OCE/DID at CDRH-FOISTATUS@fda.hhs.gov or 301-796-8118

Records processed under FOIA Request 2011-7654; Released 1/22/13

device-related adverse events) (21 CFR 803); good manufacturing practice requirements as set forth in the quality systems (QS) regulation (21 CFR Part 820); and if applicable, the electronic product radiation control provisions (Sections 531-542 of the Act); 21 CFR 1000-1050.

If you desire specific advice for your device on our labeling regulation (21 CFR Part 801), please go to http://www.fda.gov/AboutFDA/CentersOffices/CDRH/CDRHOffices/ucm115809.htm for the Center for Devices and Radiological Health's (CDRH's) Office of Compliance. Also, please note the regulation entitled, "Misbranding by reference to premarket notification" (21CFR Part 807.97). For questions regarding the reporting of adverse events under the MDR regulation (21 CFR Part 803), please go to http://www.fda.gov/MedicalDevices/Safety/ReportaProblem/default.htm for the CDRH's Office of Surveillance and Biometrics/Division of Postmarket Surveillance.

You may obtain other general information on your responsibilities under the Act from the Division of Small Manufacturers, International and Consumer Assistance at its toll-free number (800) 638-2041 or (301) 796-7100 or at its Internet address http://www.fda.gov/MedicalDevices/ResourcesforYou/Industry/default.htm.

Sincerely yours,

Malvina B. Eydelman, M.D.
Director
Division of Ophthalmic, Neurological,
and Ear, Nose and Throat Devices
Office of Device Evaluation
Center for Devices and
Radiological Health

Enclosure

Questions? Contact FDA/CDRH/OCE/DID at CDRH-FOISTATUS@fda.hhs.gov or 301-796-8118

Records processed under FOIA Request 2011-7654; Released 1/22/13

Indications for Use

510(k) Number (if known): K110097

Device Name: Acclarent Cyclops Multi-Angle Endoscope (Model CYE002)

Indications For Use: The Acclarent Cyclops Multi-Angle Endoscope is intended to provide an endoscopic means to view the nasal cavity and nasopharynx in an operating room setting.

Prescription Use ___X____ AND/OR Over-The-Counter Use _____
(Part 21 CFR 801 Subpart D) (21 CFR 807 Subpart C)

(PLEASE DO NOT WRITE BELOW LINE-CONTINUE ON ANOTHER PAGE IF NEEDED)

Concurrence of CDRH, Office of Device Evaluation (ODE)

Susan Rudy CRNP
(Division Sign-Off)
Division of Ophthalmic, Neurological and Ear,
Nose and Throat Devices

Page 1 of _____

510(k) Number K110097

Questions? Contact FDA/CDRH/OCE/DID at CDRH-FOISTATUS@fda.hhs.gov or 301-796-8118

Records processed under FOIA Request 2011-7654; Released 1/22/13

DEPARTMENT OF HEALTH & HUMAN SERVICES

Public Health Service

U.S. Food and Drug Administration
Center for Devices and Radiological Health
Document Control Center WO66-G609
10903 New Hampshire Avenue
Silver Spring, MD 20993-0002

April 12, 2011

ACCLARENT, INC.
1525-B O'BRIEN DR.
MENLO PARK, CALIFORNIA 94025
ATTN: KERI YEN

510k Number: K110097
Product: ACCLARENT CYCLOPS MULTI-ANGLE

We are holding your above-referenced Premarket Notification (510(k)) for 30 days pending receipt of the additional information that was requested by the Office of Device Evaluation. Please remember that all correspondence concerning your submission MUST cite your 510(k) number and be sent in duplicate to the Document Mail Center at the above letterhead address. Correspondence sent to any address other than the one above will not be considered as part of your official premarket notification submission. Also, please note the new Blue Book Memorandum regarding Fax and E-mail Policy entitled, "Fax and E-Mail Communication with Industry about Premarket Files Under Review. Please refer to this guidance for information on current fax and e-mail practices at http://www.fda.gov/MedicalDevices/DeviceRegulationandGuidance/GuidanceDocuments/ucm089402.htm.

The deficiencies identified represent the issues that we believe need to be resolved before our review of your 510(k) submission can be successfully completed. In developing the deficiencies, we carefully considered the statutory criteria as defined in Section 513(i) of the Federal Food, Drug, and Cosmetic Act for determining substantial equivalence of your device. We also considered the burden that may be incurred in your attempt to respond to the deficiencies. We believe that we have considered the least burdensome approach to resolving these issues. If, however, you believe that information is being requested that is not relevant to the regulatory decision or that there is a less burdensome way to resolve the issues, you should follow the procedures outlined in the "A Suggested Approach to Resolving Least Burdensome Issues" document. It is available on our Center web page at: http://www.fda.gov/MedicalDevices/DeviceRegulationandGuidance/Overview/MedicalDeviceProvisionsofFDAModernizationAct/ucm136685.htm.

If after 30 days the additional information (AI), or a request for an extension of time, is not received, we will discontinue review of your submission and proceed to delete your file from our review system (21 CFR 807.87(l)). Please note our guidance document entitled, "Guidance for Industry and FDA Staff, FDA and Industry Actions on Premarket Notification (510(k)) Submissions: Effect on FDA Review Clock and Performance Assessment". If the submitter does submit a written request for an extension, FDA will permit the 510(k) to remain on hold for up to a maximum of 180 days from the date of the AI request. The purpose of this document is to assist agency staff and the device industry in understanding how various FDA and industry actions that may be taken on 510(k)s should affect the review clock for purposes of meeting the Medical Device User Fee and Modernization Act. You may review this document at http://www.fda.gov/MedicalDevices/DeviceRegulationandGuidance/GuidanceDocuments/ucm089735.htm. Pursuant to 21 CFR 20.29, a copy of your 510(k) submission will remain in the Office of Device Evaluation. If you then wish to resubmit this 510(k) notification, a new number will be assigned and your submission will be considered a new premarket notification submission.

Questions? Contact FDA/CDRH/OCE/DID at CDRH-FOISTATUS@fda.hhs.gov or 301-796-8118

Records processed under FOIA Request 2011-7654; Released 1/22/13

Please remember that the Safe Medical Devices Act of 1990 states that you may not place this device into commercial distribution until you receive a decision letter from FDA allowing you to do so.

If you have procedural questions, please contact the Division of Small Manufacturers International and Consumer Assistance (DSMICA) at (301)796-7100 or at their toll-free number (800)638-2041, or contact the 510k staff at (301)796-5640.

Sincerely yours,

Marjorie Shulman
Consumer Safety Officer
Premarket Notification Section
Office of Device Evaluation
Center for Devices and Radiological Health

Questions? Contact FDA/CDRH/OCE/DID at CDRH-FOISTATUS@fda.hhs.gov or 301-796-8118

Records processed under FOIA Request 2011-7654; Released 1/22/13

DEPARTMENT OF HEALTH & HUMAN SERVICES **Public Health Service**

U.S. Food and Drug Administration
Center for Devices and Radiological Health
Document Control Center WO66-G609
10903 New Hampshire Avenue
Silver Spring, MD 20993-0002

March 04, 2011

ACCLARENT, INC.
1525-B O'BRIEN DR.
MENLO PARK, CALIFORNIA 94025
ATTN: KERI YEN

510k Number: K110097

Product: ACCLARENT CYCLOPS MULTI-ANGLE

Extended Until: 06/13/2011

Based on your recent request, an extension of time has been granted for you to submit the additional information we requested.

If the additional information (AI) is not received by the "Extended Until" date shown above, your premarket notification will be considered withdrawn (21 CFR 807.87(l)). If the submitter does submit a written request for an extension, FDA will permit the 510(k) to remain on hold for up to a maximum of 180 days from the date of the AI request.

If you have procedural questions, please contact the Division of Small Manufacturers International and Consumer Assistance (DSMICA) at (301)796-7100 or at their toll-free number (800)638-2041, or contact the 510k staff at (301)796-5640.

Sincerely yours,

Marjorie Shulman
Consumer Safety Officer
Premarket Notification Section
Office of Device Evaluation
Center for Devices and Radiological Health

Questions? Contact FDA/CDRH/OCE/DID at CDRH-FOISTATUS@fda.hhs.gov or 301-796-8118

Records processed under FOIA Request 2011-7654; Released 1/22/13

Acclarent

Acclarent, Inc.
1525-B O'Brien Drive
Menlo Park, CA 94025

Main 650.687.5888
Fax 650.687.5889
www.acclarent.com

March 3, 2011

FDA CDRH DMC
MAR - 4 2011
Received

Ms. Susan Rudy
Food and Drug Administration
Center for Devices and Radiological Health
Document Mail Center—WO66-G609
10903 New Hampshire Avenue
Silver Spring, MD 20993-0002

RE: 90-day Extension Request for K110097

Dear Ms. Rudy:

Acclarent has received the Additional Information Request Letter dated February 11, 2011 for K110097 (Cyclops Gen 2). Acclarent hereby requests a 90-day extension from the date of the letter to provide the additional information.

The new due date for the response is: **May 12, 2011**

If you have any questions regarding this extension request, please do not hesitate to contact me by phone (650) 687-5874, fax (650) 687-4449 or email at kyen1@its.jnj.com. Alternatively, you may also contact Mark Bishop at (650) 687-5843 or by email at mbishop1@its.jnj.com.

Sincerely,

Keri Yen
Regulatory Affairs Manager

K7

Questions? Contact FDA/CDRH/OCE/DID at CDRH-FOISTATUS@fda.hhs.gov or 301-796-8118

Records processed under FOIA Request 2011-7654; Released 1/22/13

DEPARTMENT OF HEALTH & HUMAN SERVICES

Public Health Service

U.S. Food and Drug Administration
Center for Devices and Radiological Health
Document Control Center WO66-G609
10903 New Hampshire Avenue
Silver Spring, MD 20993-0002

February 14, 2011

ACCLARENT, INC.
1525-B O'BRIEN DR.
MENLO PARK, CALIFORNIA 94025
ATTN: KERI YEN

510k Number: K110097
Product: ACCLARENT CYCLOPS MULTI-ANGLE

We are holding your above-referenced Premarket Notification (510(k)) for 30 days pending receipt of the additional information that was requested by the Office of Device Evaluation. Please remember that all correspondence concerning your submission MUST cite your 510(k) number and be sent in duplicate to the Document Mail Center at the above letterhead address. Correspondence sent to any address other than the one above will not be considered as part of your official premarket notification submission. Also, please note the new Blue Book Memorandum regarding Fax and E-mail Policy entitled, "Fax and E-Mail Communication with Industry about Premarket Files Under Review. Please refer to this guidance for information on current fax and e-mail practices at http://www.fda.gov/MedicalDevices/DeviceRegulationandGuidance/GuidanceDocuments/ucm089402.htm.

The deficiencies identified represent the issues that we believe need to be resolved before our review of your 510(k) submission can be successfully completed. In developing the deficiencies, we carefully considered the statutory criteria as defined in Section 513(i) of the Federal Food, Drug, and Cosmetic Act for determining substantial equivalence of your device. We also considered the burden that may be incurred in your attempt to respond to the deficiencies. We believe that we have considered the least burdensome approach to resolving these issues. If, however, you believe that information is being requested that is not relevant to the regulatory decision or that there is a less burdensome way to resolve the issues, you should follow the procedures outlined in the "A Suggested Approach to Resolving Least Burdensome Issues" document. It is available on our Center web page at: http://www.fda.gov/MedicalDevices/DeviceRegulationandGuidance/Overview/MedicalDeviceProvisionsofFDAModernizationAct/ucm136685.htm.

If after 30 days the additional information (AI), or a request for an extension of time, is not received, we will discontinue review of your submission and proceed to delete your file from our review system (21 CFR 807.87(l)). Please note our guidance document entitled, "Guidance for Industry and FDA Staff, FDA and Industry Actions on Premarket Notification (510(k)) Submissions: Effect on FDA Review Clock and Performance Assessment". If the submitter does submit a written request for an extension, FDA will permit the 510(k) to remain on hold for up to a maximum of 180 days from the date of the AI request. The purpose of this document is to assist agency staff and the device industry in understanding how various FDA and industry actions that may be taken on 510(k)s should affect the review clock for purposes of meeting the Medical Device User Fee and Modernization Act. You may review this document at http://www.fda.gov/MedicalDevices/DeviceRegulationandGuidance/GuidanceDocuments/ucm089735.htm. Pursuant to 21 CFR 20.29, a copy of your 510(k) submission will remain in the Office of Device Evaluation. If you then wish to resubmit this 510(k) notification, a new number will be assigned and your submission will be considered a new premarket notification submission.

Questions? Contact FDA/CDRH/OCE/DID at CDRH-FOISTATUS@fda.hhs.gov or 301-796-8118

Records processed under FOIA Request 2011-7654; Released 1/22/13

Please remember that the Safe Medical Devices Act of 1990 states that you may not place this device into commercial distribution until you receive a decision letter from FDA allowing you to do so.

If you have procedural questions, please contact the Division of Small Manufacturers International and Consumer Assistance (DSMICA) at (301)796-7100 or at their toll-free number (800)638-2041, or contact the 510k staff at (301)796-5640.

Sincerely yours,

Marjorie Shulman
Consumer Safety Officer
Premarket Notification Section
Office of Device Evaluation
Center for Devices and Radiological Health

Questions? Contact FDA/CDRH/OCE/DID at CDRH-FOISTATUS@fda.hhs.gov or 301-796-8118

Records processed under FOIA Request 2011-7654; Released 1/22/13

DEPARTMENT OF HEALTH & HUMAN SERVICES

Public Health Service

U.S. Food and Drug Administration
Center for Devices and Radiological Health
Document Mail Center ¿ WO66-G609
10903 New Hampshire Avenue
Silver Spring, MD 20993-0002

January 13, 2011

ACCLARENT, INC.
1525-B O'BRIEN DR.
MENLO PARK, CALIFORNIA 94025
UNITED STATES
ATTN: KERI YEN

510k Number: K110097
Received: 1/13/2011
Product: ACCLARENT CYCLOPS MULTI-ANGLE

The Food and Drug Administration (FDA), Center for Devices and Radiological Health (CDRH), has received the Premarket Notification, (510(k)), you submitted in accordance with Section 510(k) of the Federal Food, Drug, and Cosmetic Act(Act) for the above referenced product and for the above referenced 510(k) submitter. Please note, if the 510(k) submitter is incorrect, please notify the 510(k) Staff immediately. We have assigned your submission a unique 510(k) number that is cited above. Please refer prominently to this 510(k) number in all future correspondence that relates to this submission. We will notify you when the processing of your 510(k) has been completed or if any additional information is required. YOU MAY NOT PLACE THIS DEVICE INTO COMMERCIAL DISTRIBUTION UNTIL YOU RECEIVE A LETTER FROM FDA ALLOWING YOU TO DO SO.

Please remember that all correspondence concerning your submission MUST be sent to the Document Mail Center (DMC) at the above letterhead address. Correspondence sent to any address other than the one above will not be considered as part of your official 510(k) submission.

On September 27, 2007, the President signed an act reauthorizing medical device user fees for fiscal years 2008 - 2012. The legislation - the Medical Device User Fee Amendments of 2007 is part of a larger bill, the Food and Drug Amendments Act of 2007. Please visit our website at http://www.fda.gov/MedicalDevices/DeviceRegulationandGuidance/Overview/MedicalDeviceUserFeeandModernizationActMDUFMA/default.htm for more information regarding fees and FDA review goals. In addition, effective January 2, 2008, any firm that chooses to use a standard in the review of ANY new 510(k) needs to fill out the new standards form (Form 3654) and submit it with their 510(k). The form may be found at http://www.fda.gov/AboutFDA/ReportsManualsForms/Forms/default.htm.

We remind you that Title VIII of the Food and Drug Administration Amendments Act of 2007 (FDAAA) amended the PHS Act by adding new section 402(j) (42 U.S.C. § 282(j)), which expanded the current database known as ClinicalTrials.gov to include mandatory registration and reporting of results for applicable clinical trials of human drugs (including biological products) and devices. Section 402(j) requires that a certification form http://www.fda.gov/AboutFDA/ReportsManualsForms/Forms/default.htm accompany 510(k)/HDE/PMA submissions. The agency has issued a draft guidance titled: "Certifications To Accompany Drug, Biological

Product, and Device Applications/Submissions: Compliance with Section 402(j) of The Public Health Service Act, Added By Title VIII of The Food and Drug Administration Amendments Act of 2007" http://www.fda.gov/MedicalDevices/DeviceRegulationandGuidance/HowtoMarketYourDevice/PremarketSubmissions/PremarketNotification510k/ucm134034.htm. According to the draft guidance, 510(k) submissions that do not contain clinical data do not need the certification form.

Please note the following documents as they relate to 510(k) review: 1) Guidance for Industry and FDA Staff entitled, "Interactive Review for Medical Device Submissions: 510(k)s, Original PMAs, PMA Supplements, Original BLAs and BLA Supplements". This guidance can be found at http://www.fda.gov/MedicalDevices/DeviceRegulationandGuidance/GuidanceDocuments/ucm089402.htm. Please refer to this guidance for information on a formalized interactive review process. 2) Guidance for Industry and FDA Staff entitled, "Format for Traditional and Abbreviated 510(k)s". This guidance can be found at http://www.fda.gov/MedicalDevices/DeviceRegulationandGuidance/GuidanceDocuments/ucm084365.htm. Please refer to this guidance for assistance on how to format an original submission for a Traditional or Abbreviated 510(k).

In all future premarket submissions, we encourage you to provide an electronic copy of your submission. By doing so, you will save FDA resources and may help reviewers navigate through longer documents more easily. Under CDRH's e-Copy Program, you may replace one paper copy of any premarket submission (e.g., 510(k), IDE, PMA, HDE) with an electronic copy. For more information about the program, including the formatting requirements, please visit our web site at http://www.fda.gov/MedicalDevices/DeviceRegulationandGuidance/HowtoMarketYourDevice/PremarketSubmissions/ucm134508.html. In addition, the 510(k) Program Video is now available for viewing on line at http://www.fda.gov/MedicalDevices/DeviceRegulationandGuidance/HowtoMarketYourDevice/PremarketSubmissions/PremarketNotification510k/ucm070201.htm .

Please ensure that whether you submit a 510(k) Summary as per 21 CFR 807.92, or a 510(k) Statement as per 21 CFR 807.93, it meets the content and format regulatory requirements.

Lastly, you should be familiar with the regulatory requirements for medical devices available at Device Advice http://www.fda.gov/MedicalDevices/DeviceRegulationandGuidance/default.htm. If you have questions on the status of your submission, please contact DSMICA at (301)796-7100 or the toll-free number (800)638-2041 , or at their internet address http://www.fda.gov/MedicalDevices/DeviceRegulationandGuidance/default.htm. If you have procedural questions, please contact the 510(k) Staff at (301)796-5640.

Sincerely,

510(k) Staff

Records processed under FOIA Request 2011-7654; Released 1/22/13

K110099

FDA CDRH DMC
JAN 13 2011
Received K24

Acclarent

January 12, 2011

U.S. Food and Drug Administration
Center for Devices and Radiological Health
Document Mail Center (WO66-G609)
10903 New Hampshire Avenue
Silver Spring, MD 20993-0002

RE: Special 510(k): Device Modification to the Acclarent Cyclops Multi-Angle Endoscope (K100577)

Dear Sir/Madam,

Acclarent, Inc. hereby submits two copies of a Special 510(k) application for a device modification to the Acclarent Cyclops Multi-Angle Endoscope (K100577), which was cleared by FDA as a Class II device on January 6, 2011. The device modification to the Acclarent Cyclops Multi-Angle Endoscope will be referred herein as "Cyclops Gen 2".

(b) (4)

[redacted]

Questions? Contact FDA/CDRH/OCE/DID at CDRH-FOISTATUS@fda.hhs.gov or 301-796-8118

Records processed under FOIA Request 2011-7654; Released 1/22/13

(b) (4)

[redacted]

Sincerely,

Keri Yen
Manager, Regulatory Affairs

Enclosures (2 copies)

Questions? Contact FDA/CDRH/OCE/DID at CDRH-FOISTATUS@fda.hhs.gov or 301-796-8118

Records processed under FOIA Request 2011-7654; Released 1/22/13

DEPARTMENT OF HEALTH AND HUMAN SERVICES
FOOD AND DRUG ADMINISTRATION

CDRH PREMARKET REVIEW SUBMISSION COVER SHEET

Form Approval
OMB No. 9010-0120
Expiration Date: August 31, 2010.
See OMB Statement on page 5.

Date of Submission	User Fee Payment ID Number	FDA Submission Document Number *(if known)*
01/12/2011	MD6053650-956733	

SECTION A — TYPE OF SUBMISSION

PMA	PMA & HDE Supplement	PDP	510(k)	Meeting
☐ Original Submission	☐ Regular (180 day)	☐ Original PDP	☑ Original Submission:	☐ Pre-510(K) Meeting
☐ Premarket Report	☐ Special	☐ Notice of Completion	☐ Traditional	☐ Pre-IDE Meeting
☐ Modular Submission	☐ Panel Track (PMA Only)	☐ Amendment to PDP	☑ Special	☐ Pre-PMA Meeting
☐ Amendment	☐ 30-day Supplement		☐ Abbreviated (Complete section I, Page 5)	☐ Pre-PDP Meeting
☐ Report	☐ 30-day Notice		☐ Additional Information	☐ Day 100 Meeting
☐ Report Amendment	☐ 135-day Supplement		☐ Third Party	☐ Agreement Meeting
☐ Licensing Agreement	☐ Real-time Review			☐ Determination Meeting
	☐ Amendment to PMA & HDE Supplement			☐ Other *(specify):*
	☐ Other			

IDE	Humanitarian Device Exemption (HDE)	Class II Exemption Petition	Evaluation of Automatic Class III Designation (De Novo)	Other Submission
☐ Original Submission	☐ Original Submission	☐ Original Submission	☐ Original Submission	☐ 513(g)
☐ Amendment	☐ Amendment	☐ Additional Information	☐ Additional Information	☐ Other *(describe submission):*
☐ Supplement	☐ Supplement			
	☐ Report			
	☐ Report Amendment			

Have you used or cited Standards in your submission? ☑ Yes ☐ No *(If Yes, please complete Section I, Page 5)*

SECTION B — SUBMITTER, APPLICANT OR SPONSOR

Company / Institution Name: Acclarent, Inc.	Establishment Registration Number *(if known)*: 3005172759		
Division Name *(if applicable)*:	Phone Number *(including area code)*: (650) 687-5874		
Street Address: 1525-B O'Brien Drive	FAX Number *(including area code)*: (650) 687-4449		
City: Menlo Park	State / Province: CA	ZIP/Postal Code: 94025	Country: USA
Contact Name: Keri Yen			
Contact Title: Regulatory Affairs Manager	Contact E-mail Address: kyen1@its.jnj.com		

SECTION C — APPLICATION CORRESPONDENT (e.g., consultant, if different from above)

Company / Institution Name: Same as Section B			
Division Name *(if applicable)*:	Phone Number *(including area code)*: ( )		
Street Address:	FAX Number *(including area code)*: ( )		
City:	State / Province:	ZIP/Postal Code:	Country:
Contact Name:			
Contact Title:	Contact E-mail Address:		

PSC Graphics: (301) 443-1090 EF

Questions? Contact FDA/CDRH/OCE/DID at CDRH-FOISTATUS@fda.hhs.gov or 301-796-8118

Records processed under FOIA Request 2011-7654; Released 1/22/13

SECTION D1 — REASON FOR APPLICATION - PMA, PDP, OR HDE

- [ ] Withdrawal
- [ ] Additional or Expanded Indications
- [ ] Request for Extension
- [ ] Post-approval Study Protocol
- [ ] Request for Applicant Hold
- [ ] Request for Removal of Applicant Hold
- [ ] Request to Remove or Add Manufacturing Site
- [ ] Process change:
  - [ ] Manufacturing
  - [ ] Sterilization
  - [ ] Packaging
  - [ ] Other *(specify below)*
- [ ] Response to FDA correspondence:
- [ ] Change in design, component, or specification:
  - [ ] Software / Hardware
  - [ ] Color Additive
  - [ ] Material
  - [ ] Specifications
  - [ ] Other *(specify below)*
- [ ] Labeling change:
  - [ ] Indications
  - [ ] Instructions
  - [ ] Performance
  - [ ] Shelf Life
  - [ ] Trade Name
  - [ ] Other *(specify below)*
- [ ] Location change:
  - [ ] Manufacturer
  - [ ] Sterilizer
  - [ ] Packager
- [ ] Report Submission:
  - [ ] Annual or Periodic
  - [ ] Post-approval Study
  - [ ] Adverse Reaction
  - [ ] Device Defect
  - [ ] Amendment
- [ ] Change in Ownership
- [ ] Change in Correspondent
- [ ] Change of Applicant Address
- [ ] Other Reason *(specify)*:

SECTION D2 — REASON FOR APPLICATION - IDE

- [ ] New Device
- [ ] New Indication
- [ ] Addition of Institution
- [ ] Expansion / Extension of Study
- [ ] IRB Certification
- [ ] Termination of Study
- [ ] Withdrawal of Application
- [ ] Unanticipated Adverse Effect
- [ ] Notification of Emergency Use
- [ ] Compassionate Use Request
- [ ] Treatment IDE
- [ ] Continued Access
- [ ] Change in:
  - [ ] Correspondent / Applicant
  - [ ] Design / Device
  - [ ] Informed Consent
  - [ ] Manufacturer
  - [ ] Manufacturing Process
  - [ ] Protocol - Feasibility
  - [ ] Protocol - Other
  - [ ] Sponsor
- [ ] Report submission:
  - [ ] Current Investigator
  - [ ] Annual Progress Report
  - [ ] Site Waiver Report
  - [ ] Final
- [ ] Repose to FDA Letter Concerning:
  - [ ] Conditional Approval
  - [ ] Deemed Approved
  - [ ] Deficient Final Report
  - [ ] Deficient Progress Report
  - [ ] Deficient Investigator Report
  - [ ] Disapproval
  - [ ] Request Extension of Time to Respond to FDA
  - [ ] Request Meeting
  - [ ] Request Hearing
- [ ] Other Reason *(specify)*:

SECTION D3 — REASON FOR SUBMISSION - 510(k)

- [ ] New Device
- [ ] Additional or Expanded Indications
- [ ] Change in Technology
- [x] Other Reason *(specify)*:

Device modification to predicate device. Fundamental scientific technology and indications for use are identical to predicate device.

Questions? Contact FDA/CDRH/OCE/DID at CDRH-FOISTATUS@fda.hhs.gov or 301-796-8118

Records processed under FOIA Request 2011-7654; Released 1/22/13

SECTION E — ADDITIONAL INFORMATION ON 510(K) SUBMISSIONS

Product codes of devices to which substantial equivalence is claimed

1	EOB	2		3		4	
5		6		7		8	

Summary of, or statement concerning, safety and effectiveness information

- [x] 510 (k) summary attached
- [ ] 510 (k) statement

Information on devices to which substantial equivalence is claimed *(if known)*

	510(k) Number		*Trade or Proprietary or Model Name*		*Manufacturer*
1	K100577	1	Acclarent Cyclops Multi-Angle Endoscope	1	Acclarent
2		2		2	
3		3		3	
4		4		4	
5		5		5	
6		6		6	

SECTION F — PRODUCT INFORMATION - APPLICATION TO ALL APPLICATIONS

Common or usual name or classification

Endoscope

	Trade or Proprietary or Model Name for This Device		Model Number
1	Acclarent Cyclops Multi-Angle Endoscope	1	CYE002
2		2	
3		3	
4		4	
5		5	

FDA document numbers of all prior related submissions *(regardless of outcome)*

1 K100577	2	3	4	5	6
7	8	9	10	11	12

Data Included in Submission

- [x] Laboratory Testing
- [ ] Animal Trials
- [ ] Human Trials

SECTION G — PRODUCT CLASSIFICATION - APPLICATION TO ALL APPLICATIONS

Product Code	C.F.R. Section *(if applicable)*	Device Class
EOB	21 CFR 874.4760	[ ] Class I [x] Class II [ ] Class III [ ] Unclassified

Classification Panel

Nasopharyngoscope (Flexible or Rigid), Ear Nose & Throat

Indications *(from labeling)*

The Acclarent Cyclops Multi-Angle Endoscope is intended to provide an endoscopic means to view the nasal cavity and nasopharynx in an operating room environment.

Questions? Contact FDA/CDRH/OCE/DID at CDRH-FOISTATUS@fda.hhs.gov or 301-796-8118

Records processed under FOIA Request 2011-7654; Released 1/22/13

Note: Submission of this information does not affect the need to submit a 2891 or 2891a Device Establishment Registration form.	FDA Document Number *(if known)*

SECTION H — MANUFACTURING / PACKAGING / STERILIZATION SITES RELATING TO A SUBMISSION

☑ Original ☐ Add ☐ Delete	Facility Establishment Identifer (FEI) Number: 3005172759	☑ Manufacturer ☐ Contract Manufacturer	☐ Contract Sterilizer ☐ Repackager / Relabeler
Company / Institution Name: Acclarent, Inc.		Establishment Registration Number: 3005172759	
Division Name *(if applicable)*		Phone Number *(including area code)*: (650) 687-5874	
Street Address: 1525-B O'Brien Drive		FAX Number *(including area code)*: (650) 687-4449	
City: Menlo Park		State / Province: CA	ZIP/Postal Code: 94025 / Country: USA
Contact Name: Keri Yen	Contact Title: Regulatory Affairs Manager	Contact E-mail Address: kyen1@its.jnj.com	

(b) (4)

[redacted]

☐ Original ☐ Add ☐ Delete	Facility Establishment Identifer (FEI) Number	☐ Manufacturer ☐ Contract Manufacturer	☐ Contract Sterilizer ☐ Repackager / Relabeler
Company / Institution Name		Establishment Registration Number	
Division Name *(if applicable)*		Phone Number *(including area code)*: ( )	
Street Address		FAX Number *(including area code)*: ( )	
City		State / Province	ZIP/Postal Code / Country
Contact Name	Contact Title	Contact E-mail Address	

Questions? Contact FDA/CDRH/OCE/DID at CDRH-FOISTATUS@fda.hhs.gov or 301-796-8118

Records processed under FOIA Request 2011-7654; Released 1/22/13

SECTION I UTILIZATION OF STANDARDS

Note: Complete this section if your application or submission cites standards or includes a *"Declaration of Conformity to a Recognized Standard"* statement.

	Standards No.	Standards Organization	Standards Title	Version	Date
1	60601-1-2	IEC	Medical electrical equipment--part 2: Particular requirements for the safety of endoscopic equipment	2	07/13/2000
2	12	AAMI TIR	Designing, testing, and labeling resuable medical devices for reprocessing in health care facilities: A guide for medical device manufacturers	2	12/23/2004
3	10993-1	ISO	Biological Evaluation of Medical Devices --Part 1: Evaluation and Testing	3	09/03/2009
4	30	AAMI TIR	A compendium of processes, materials, test methods, acceptance criteria for cleaning reusable devices	1	10/08/2003
5	ST 79	AAMI ANSI	Comprehensive guide to steam sterilization and sterility assurance in health care facilities	3	09/04/2010
6	17664	ISO	Sterilization of medical devices--information to be provided by manufacturer for processing resterilizable	1	03/01/2004
7	17665-1	ISO	Sterilization of health care products--moist heat-part 1: requirements for the development, validation, and routine control of a sterilization process for medical devices	1	08/01/2006

Please include any additional standards to be cited on a separate page.

Public reporting burden for this collection of information is estimated to average 0.5 hour per response, including the time for reviewing instructions, searching existing data sources, gathering and maintaining the data needed, and completing reviewing the collection of information. Send comments regarding this burden estimate or any other aspect of this collection of information, including suggestions for reducing this burden to:

Food and Drug Administration
CDRH (HFZ-342)
9200 Corporate Blvd.
Rockville, MD 20850

An agency may not conduct or sponsor, and a person is not required to respond to, a collection of information unless it displays a currently valid OMB control

Questions? Contact FDA/CDRH/OCE/DID at CDRH-FOISTATUS@fda.hhs.gov or 301-796-8118

Records processed under FOIA Request 2011-7654; Released 1/22/13

Addendum to Section I: Utilization of Standards (Form FDA 3514)

Device modification to Acclarent Cyclops Multi-Angle Endoscope (Cyclops Gen 2)

No.	Standards No	Standards Organization	Standards Title	Version	Date
(b) (4) [redacted]					

Questions? Contact FDA/CDRH/OCE/DID at CDRH-FOISTATUS@fda.hhs.gov or 301-796-8118

Records processed under FOIA Request 2011-7654; Released 1/22/13

Acclarent

January 12, 2011

U.S. Food and Drug Administration
Center for Devices and Radiological Health
Document Mail Center (WO66-G609)
10903 New Hampshire Avenue
Silver Spring, MD 20993-0002

RE: Special 510(k): Device Modification to the Acclarent Cyclops Multi-Angle Endoscope (K100577)

Dear Sir/Madam,

Acclarent, Inc. hereby submits two copies of a Special 510(k) application for a device modification to the Acclarent Cyclops Multi-Angle Endoscope (K100577), which was cleared by FDA as a Class II device on January 6, 2011. The device modification to the Acclarent Cyclops Multi-Angle Endoscope will be referred herein as "Cyclops Gen 2".

(b) (4)

[redacted]

Questions? Contact FDA/CDRH/OCE/DID at CDRH-FOISTATUS@fda.hhs.gov or 301-796-8118

Records processed under FOIA Request 2011-7654; Released 1/22/13

(b) (4)

[redacted]

Sincerely,

Keri Yen
Manager, Regulatory Affairs

Enclosures (2 copies)

Questions? Contact FDA/CDRH/OCE/DID at CDRH-FOISTATUS@fda.hhs.gov or 301-796-8118

Records processed under FOIA Request 2011-7654; Released 1/22/13

Special 510(k): Device Modification to Acclarent Cyclops Multi-Angle Endoscope

Class II (Product Code : EOB)

Submitted:
January 12, 2011

Questions? Contact FDA/CDRH/OCE/DID at CDRH-FOISTATUS@fda.hhs.gov or 301-796-8118

Records processed under FOIA Request 2011-7654; Released 1/22/13

SUBMISSION SUMMARY

Acclarent, Inc. hereby submits two copies of a Special 510(k) application for a device modification to the Acclarent Cyclops Multi-Angle Endoscope (K100577), which was cleared by FDA as a Class II device on January 6, 2011. The device modification to the Acclarent Cyclops Multi-Angle Endoscope will be referred herein as "Cyclops Gen 2"

(b) (4)

[redacted]

Questions? Contact FDA/CDRH/OCE/DID at CDRH-FOISTATUS@fda.hhs.gov or 301-796-8118

Records processed under FOIA Request 2011-7654; Released 1/22/13

TABLE OF CONTENTS

SUBMISSION SUMMARY 2

TABLE OF CONTENTS 3

TABLES 4

FIGURES 4

APPENDICES 4

SECTION 1: PREMARKET NOTIFICATION TRUTHFUL AND ACCURATE STATEMENT 5

SECTION 2: DESCRIPTION OF THE MODIFIED DEVICE 6

A. Device History 6
B. Modified Device Description 6
C. Principles of Operation 8
D. Device Specifications 9
E. Materials Identification 10

SECTION 3: SUBSTANTIAL EQUIVALENCY 12

A. Introduction 12
B. Predicate Device 12
C. Comparison with Predicate Device 12
D. Indications for Use 14
E. Physical Characteristics 14
F. Performance 14
G. Materials Identification 14
H. Summary 15

SECTION 4: PROPOSED LABELING 16

A. Packaging Label 16
B. Instructions for Use 16

SECTION 5: SUMMARY OF DESIGN CONTROL ACTIVITIES 17

A. Risk Analysis Methods and Results 17
B. Design Validation Activities 17

SECTION 6: PERFORMANCE TESTING 19

A. Results 19

SECTION 7: BIOCOMPATIBILITY 25

SECTION 8: CLEANING & STERILIZATION INFORMATION 26

A. Documentation of Validation of Reprocessing Instructions 26
B. Automated Cleaning 26
C. Steam Sterilization 30
D. Reuse 32
E. Packaging Description 32

SECTION 9: LETTERS TO FILE 35

Questions? Contact FDA/CDRH/OCE/DID at CDRH-FOISTATUS@fda.hhs.gov or 301-796-8118

Records processed under FOIA Request 2011-7654; Released 1/22/13

TABLES

Table 1. Comparison of Cyclops Gen 2 Specification with Predicate Device 9
Table 2. Cyclops Gen 2 Material Identification 10
Table 3. Comparison of the Subject Device to the Predicate Devices 12
Table 4. Comparison of Cyclops Gen 2 Materials against Predicate Device 15
Table 5. Summary of Design Validation Results 18
Table 6: Cyclops Gen 2 Test Specifications and Results 19
Table 7. Summary of Illumination Results at Various Angles 20
Table 8. Summary of Scope Resolution Results 21
Table 9. Summary of Dial Actuation Forces 21
Table 10. Summary of Temperature Testing 22
Table 11. Summary of Cyclops Maximum Field Strength 23
Table 12. Summary of Electromagnetic Compatibility Testing 24
Table 13. Summary of Materials and Patient Contact 25
Table 14. Summary of Automated Cleaning Validation 26
Table 15. Residual Hemoglobin Content for Cyclops Gen 2 29
Table 16. Residual Protein Content for Cyclops Gen 2 29
Table 17. Summary of Steam Sterilization Validation Parameters 30
Table 18. Summary of ISTA 2a Testing 33
Table 19. Summary of Functional Test Results after ISTA 2a Testing 34

FIGURES

Figure 1. Graphic Depiction of Cyclops Gen 2 7
Figure 2. Orientation and Dimensions of Inner and Outer Magnets 8
Figure 3. Direction of View Marking (Top View) 9
Figure 4. Graphical Depicture of Thermal Testing Measurement Locations 22
Figure 5. Automated Cleaning Validation Plan 28
Figure 6. Contamination diagram 29
Figure 7. Steam Sterilization Validation Plan 32
Figure 8. Graphic Representations of Packaging Configuration 33

APPENDICES

APPENDIX A: 510(k) SUMMARY 36
APPENDIX B: INDICATIONS FOR USE STATEMENT 38
APPENDIX C: DECLARATION OF CONFORMITY 39
APPENDIX D: INSTRUCTIONS FOR USE 40
APPENDIX E: DEVICE LABELING 41
APPENDIX F: RISK MANAGEMENT DOCUMENT 42

Questions? Contact FDA/CDRH/OCE/DID at CDRH-FOISTATUS@fda.hhs.gov or 301-796-8118

Records processed under FOIA Request 2011-7654; Released 1/22/13

SECTION 1: PREMARKET NOTIFICATION TRUTHFUL AND ACCURATE STATEMENT

[As required by 21 CFR §807.87(j)]

I certify that, in my capacity as Regulatory Affairs Manager at Acclarent, Inc., to the best of my knowledge, all data and information submitted in the premarket notification are truthful and accurate and that no material fact has been omitted.

Keri Yen
Regulatory Affairs Manager

January 12, 2011
Date

[510(k) Number]

Questions? Contact FDA/CDRH/OCE/DID at CDRH-FOISTATUS@fda.hhs.gov or 301-796-8118

Records processed under FOIA Request 2011-7654; Released 1/22/13

SECTION 2: DESCRIPTION OF THE MODIFIED DEVICE

A. Device History

The Acclarent Cyclops Multi-Angle Endoscope first received FDA clearance through K100577 on January 6, 2011 (Product Code: EOB, Regulation Number 874.4760) as a Class II device. The Acclarent Cyclops Multi-Angle Endoscope provides an endoscopic view of the nasal cavity and nasopharynx in an operating room setting. It is a 4mm rigid endoscope that has the capability of varying the direction of view from 10° to 100°. (b) (4) [redacted] proximal end of the device is compatible with [redacted]ers. There are two accessories that accompany the Acclarent Cyclops Multi-Angle Endoscope. Two stainless steel adapters are provided to facilitate connection with various medical light sources. The adapters connect to the light post. The Acclarent Cyclops Multi-Angle Endoscope is a reusable device that is packaged and sold to physicians as a non-sterile device. The device must be cleaned and sterilized prior to use; the device is validated for full manual cleaning with extended enzymatic soak plus a general instrument automated washer and pre-vacuum steam sterilization only.

(b) (4) [redacted]

The modified device, Cyclops Gen 2, maintains the same fundamental scientific technology and indications for use as the predicate device, Acclarent Cyclops Multi-Angle Endoscope.

B. Modified Device Description

The (b) (4) [redacted] is intended to provide a physician with an endoscopic means to view the nasal cavity or nasopharynx in an operating room setting. The following product description and principles of operation of (b) (4) [redacted] call out features illustrated in **Figure 1**, identified by the letters A-I.

Questions? Contact FDA/CDRH/OCE/DID at CDRH-FOISTATUS@fda.hhs.gov or 301-796-8118

Records processed under FOIA Request 2011-7654; Released 1/22/13

(b) (4)

[redacted]

The subject device is a rigid 4 mm endoscope (F) that has the capability of varying direction of view from 10° to 90°, which reduces the need for multiple angled endoscopes. The direction of view is altered by the direction of view dial (C); the direction of view is indicated by markings and a dot indicator on the scope body (B) that is visible to the user. (b) (4) [redacted] (b) (4) [redacted] The device shaft can also rotate 320° to allow for visualization of structures without rotating the device; this is controlled by the shaft rotation dial (D). A standard B-cup eyepiece (A) located on the proximal end of the device is compatible with cameras or universal C-mount camera couplers. The light post (G) on the subject device is compatible with an ACMI light source.

There are two accessories that a (b) (4) [redacted] Two stainless steel adapters (H,I) are provided to facilitate connection with Wolf, Storz, or Olympus medical light sources. The adapters connect to the light post.

(b) (4)

[redacted]

Questions? Contact FDA/CDRH/OCE/DID at CDRH-FOISTATUS@fda.hhs.gov or 301-796-8118

Records processed under FOIA Request 2011-7654; Released 1/22/13

(b) (4) continues to meet the same acceptance criteria set forth for the predicate device as presented (b) (4)

(b) (4)

Bench testing has been conducted on (b) (4) on non-sterile and sterile samples to illustrate conformance with the device specifications of the Acclarent Cyclops Multi-Angle Endoscope, including field of view, direction of view, dial actuation forces, and maximum magnetic field strength (refer to **Section 6**). Additionally, the cadaver study presented in (b) (4) (b) demonstrates tha (b) (4) continues to meet the intended use with the modifications to the materials, specifications, design, and packaging.

C. Principles of Operation

The modified device, (b) (4) has the same principles of operation as that of the predicate device, Acclarent Cyclops Multi-Angle Endoscope (K100577). Both the modified and predicate devices are rigid endoscopes that allow for visualization of the nasal cavity and nasopharynx in an operating room setting. Further, both have the capability to vary the direction of view and to rotate the shaft. Similar to the predicate device, (b) (4) is designed with a direction of view dial that controls a prism located on the distal end of the shaft; the prism pivots so that the direction of view exposed to the lens changes. Additionally, (b) (4) is designed with a shaft rotation dial. As the shaft rotation dial turns, the optical components and illumination fibers rotate with the shaft, maintaining image resolution and illumination. The shaft rotation dial does not impact the optical image of the subject device (b) (4) (b) (4) This mechanism is identical to the Acclarent Cyclops Multi-Angle Endoscope.

The (b) (4) marking scheme has been slightly modified from the predicate device. The predicate device has visible markings are both sides of the direction of view dial; whereas, the

Questions? Contact FDA/CDRH/OCE/DID at CDRH-FOISTATUS@fda.hhs.gov or 301-796-8118

Records processed under FOIA Request 2011-7654; Released 1/22/13

modified device has visible markings on one side of the direction of view dial. (b) (4) (b) (4) which includes a dot indicator. As the dial turns, the position of the dot indicator informs the user of the direction of view, which is identical to the predicate device. There is also a dot indicator on the shaft rotation dial as demonstrated in (b) (4) to indicate shaft rotation. At the zero position, the dot indicator aligns with a dot on the scope body. The scope body consists of the area between the eyepiece and direction of view dial and the area between the direction of view dial and shaft rotation dial.

(b) (4)

(b) (4) is a reusable device that will be packaged and sold to physicians as a non-sterile device. The modified device must be cleaned and sterilized prior to use. Similar to the Acclarent Cyclops Multi-Angle Endoscope, (b) (4) is validated for automated cleaning and steam sterilization only. Instructions for cleaning and sterilization are detailed in the Instructions for Use. (b) (4) for additional information regarding cleaning and sterilization.

D. Device Specifications

(b) (4)

(b) (4) The differences in field of view, direction of view, and dial actuation forces between the predicate and subject device do not impact the intended use, indications for use, or fundamental scientific technology. (b) (4) provides a comparison of the predicate device and the subject device.

(b) (4)

Questions? Contact FDA/CDRH/OCE/DID at CDRH-FOISTATUS@fda.hhs.gov or 301-796-8118

Records processed under FOIA Request 2011-7654; Released 1/22/13

(b) (4)

[redacted]

E. Materials Identification

(b) (4)

[redacted]

Table 2. Cyclops Gen 2 Material Identification

(b) (4)

[redacted]

Questions? Contact FDA/CDRH/OCE/DID at CDRH-FOISTATUS@fda.hhs.gov or 301-796-8118

Records processed under FOIA Request 2011-7654; Released 1/22/13

(b) (4)

[redacted]

Questions? Contact FDA/CDRH/OCE/DID at CDRH-FOISTATUS@fda.hhs.gov or 301-796-8118

Records processed under FOIA Request 2011-7654; Released 1/22/13

SECTION 3: SUBSTANTIAL EQUIVALENCY

A. Introduction

The modified subject device (b) (4) [redacted] has the identical indications for use statement as its predicate device, Acclarent Cyclops Multi-Angle Endoscope (K100577). The subject device is indicated for use to provide an endoscopic means to view the nasal cavity and nasopharynx in an operating room setting.

The performance characteristics and the fundamental scientific technology of the modified device do not raise any significant issues of safety or effectiveness when compared to the predicate device, as demonstrated by the bench testing data in (b) (4) [redacted] and the cadaver data in (b) (4) [redacted]

B. Predicate Device

The subject device is substantially equivalent to the primary predicate device, Acclarent Cyclops Multi-Angle Endoscope (K100577), a Class II device as determined by FDA on January 6, 2011. The information for the predicate device, including the indications for use, product labeling, fundamental scientific technology, and IFU, may be referenced in the 510(k) submission for the Acclarent Cyclops Multi-Angle Endoscope, K100577.

The indications for use statement of the (b) (4) [redacted] is identical to the predicate device; both devices are intended to provide an endoscopic image of the same anatomical regions: nasal cavity and nasopharynx. Additionally, the technological characteristics of the subject device are similar to the predicate device; (b) (4) [redacted] s a rigid endoscope and the modifications do not change the operating principle or mechanism of action of the predicate device.

C. Comparison with Predicate Device

Table 3 demonstrates that the modified device, (b) (4) [redacted] is substantially equivalent to the predicate device for its indication for use, performance, materials, and technological characteristics.

(b) (4) [redacted]

Questions? Contact FDA/CDRH/OCE/DID at CDRH-FOISTATUS@fda.hhs.gov or 301-796-8118

Records processed under FOIA Request 2011-7654; Released 1/22/13

Attribute	Predicate Device (Acclarent Cyclops Multi-Angle Endoscope)	Subject Device (Cyclops Gen 2)
Indications for Use	The Acclarent Cyclops Multi-Angle Endoscope is intended to provide an endoscopic means to view the nasal cavity or nasopharynx in an operating room setting.	Same, The Acclarent Cyclops Multi-Angle Endoscope is intended to provide an endoscopic means to view the nasal cavity or nasopharynx in an operating room setting.
Intended Region	Nasal cavity and nasopharynx	Same, Nasal cavity and nasopharynx
(b) (4)	[redacted]	[redacted]
Provided Non-Sterile	Yes	Same, Yes
Cleaning Methods	Automated Cleaning	Same, Automated Cleaning
Sterilization Methods	Steam Sterilization	Same, Steam Sterilization
Re-usable	Yes	Same, Yes
Direct Patient Contact	Yes	Same, Yes
Primary Materials	(b) (4) [redacted]	[redacted]
Technological Characteristics	Visualization of procedures performed in the nasal cavity or nasopharynx.	Same, Visualization of procedures performed in the nasal cavity or nasopharynx.
Removable Adapters	Yes, Wolf, Storz/Olympus	Same, Wolf, Storz/Olympus
(b) (4)	[redacted]	[redacted]
(b) (4)	[redacted]	[redacted]
(b) (4)	[redacted]	[redacted]
Rigidity	Rigid	Same, Rigid
(b) (4)	[redacted]	[redacted]
Depth of View	5-40 mm	Same, 5-40 mm
Field of View	60°	55°
Direction of View	10° to 100°	10° to 90°
Dial Actuation Force	(b) (4) [redacted]	[redacted]
Eyepiece Compatibility	[redacted]	[redacted]
Fixed Focus	[redacted]	[redacted]
Shaft Diameter	4mm	Same, 4mm
Working Length	6.89 inches (175mm)	Same, 6.89 inches (175mm)
(b) (4)	(b) (4) [redacted]	[redacted]
Light Source	Medical light source	Same, Medical light source
EMC Testing	(b) (4) [redacted]	[redacted]

Questions? Contact FDA/CDRH/OCE/DID at CDRH-FOISTATUS@fda.hhs.gov or 301-796-8118

Records processed under FOIA Request 2011-7654; Released 1/22/13

D. Indications for Use

The indications for use of (b) (4) [redacted] is identical to the predicate device. The subject device is intended to provide an endoscopic means to view the nasal cavity or nasopharynx in an operating room setting. The indications for use statement can be found in **Appendix B**.

E. Physical Characteristics

The physical characteristics of (b) (4) [redacted] are very similar to the predicate device. The differences between the subject device and the predicate device are identified below.

(b) (4) [redacted]

The differences between the subject device and the predicate device are supported by the appropriate bench testing and design validation testing.

All other aspects of the (b) (4) [redacted] device remain identical to the predicate device, Acclarent Cyclops Multi-Angle Endoscope. The intended region, technological characteristics, viewing optics, depth of view, shaft diameter, working length, and illumination fibers are the same in both devices.

F. Performance

Performance testing on (b) (4) [redacted] was conducted under non-sterile and sterile conditions. Similar test methods and acceptance criteria that were used for the predicate device, Acclarent Cyclops Multi-Angle Endoscope, were used for all the bench tests in this submission. The subject device was found to perform similarly to the predicate device and met all performance testing acceptance criteria. The performance specifications for Cyclops Gen 2 can be found in **Section 6**.

G. Materials Identification

(b) (4) [redacted] utilizes materials that are common in the medical device industry. There are slight differences in materials in comparison to the predicate device. (b) (4) [redacted] All other materials remain identical to the predicate device. **Table 4** provides a comparison between the predicate and subject devices.

Questions? Contact FDA/CDRH/OCE/DID at CDRH-FOISTATUS@fda.hhs.gov or 301-796-8118

Records processed under FOIA Request 2011-7654; Released 1/22/13

(b) (4)

[redacted]

H. Summary

(b) (4) [redacted] is substantially equivalent to the predicate device in indication for use, performance, and fundamental scientific technology.

Questions? Contact FDA/CDRH/OCE/DID at CDRH-FOISTATUS@fda.hhs.gov or 301-796-8118

Records processed under FOIA Request 2011-7654; Released 1/22/13

SECTION 4: PROPOSED LABELING

A. Packaging Label

A representative copy of the draft labeling is provided in **Appendix E** for (b) (4) [redacted] At this time, no advertising and promotional materials for the (b) (4) [redacted] have been developed.

B. Instructions for Use

A copy of the draft Instructions for Use for (b) (4) [redacted] is provided in **Appendix D.** The Instructions for Use will be provided electronically to the users; therefore, users will have access to the most current version.

The intended use, indications for use, and contraindication of (b) (4) [redacted] has not changed as a result of the modifications to the Acclarent Cyclops Multi-Angle Endoscope. Minor modifications to the instructions for use have been made to reflect the change in direction of view and packaging; the manual/automated cleaning and steam sterilization instructions are identical to the predicate device, Acclarent Cyclops Multi-Angle Endoscope. For the Agency's convenience, a red-lined copy that compares the predicate device's and subject device's Instructions for Use is also included in **Appendix D**.

Questions? Contact FDA/CDRH/OCE/DID at CDRH-FOISTATUS@fda.hhs.gov or 301-796-8118

Records processed under FOIA Request 2011-7654; Released 1/22/13

SECTION 5: SUMMARY OF DESIGN CONTROL ACTIVITIES

A. Risk Analysis Methods and Results

In accordance with Acclarent Standard Operating Procedures, design control activities include the assessment of potential hazards during use. A "top-down analysis" is performed to document all potential user hazards associated with (b) (4) [redacted]. Additionally, the probability and severity of each failure mode is documented in the Risk Management document. A Risk Level is determined as "Low", "Medium", or "High" based on the probability and severity of each potential failure mode. The Risk Management document is assessed and approved prior to clinical use of a product and is finalized prior to commercial release; the Risk Level must be below an acceptance threshold prior to product release for distribution. The Risk Management document for each product is reviewed annually to verify whether the risk has changed. Complaint history must also be reviewed in order to make this evaluation.

Per design control procedures, the Risk Management document fo (b) (4) [redacted] has been reviewed to assess the impact of the design and material modifications outlined in this Special 510(k) submission. All results were addressed and all Risk Levels are below the acceptance threshold. It can be concluded that the modified design of the Acclarent Cyclops Multi-Angle Endoscope does not raise any new issues of safety or efficacy.

The Risk Management document is filed within the Design History File in our Quality System. A copy of the applicable failure modes related to the Hazard Analysis for (b) (4) [redacted] nd the legend can be found in **Appendix F**.

B. Design Validation Activities

(b) (4)

[redacted]

[1] VRP005126

Questions? Contact FDA/CDRH/OCE/DID at CDRH-FOISTATUS@fda.hhs.gov or 301-796-8118

Records processed under FOIA Request 2011-7654; Released 1/22/13

Table 5. Summary of Design Validation Results

(b) (4) [redacted]

Additionally, the following items were evaluated for (b) (4) [redacted] as part of the design validation:

(b) (4) [redacted]

As exhibited above, (b) (4) [redacted] maintains clinically acceptable illumination and resolution when used in cadaveric specimens as the direction of view and shaft rotation dials are rotated. To supplement the design validation results, bench testing has also been performed to verify device performance of the modified device (see **Section 6**).

Questions? Contact FDA/CDRH/OCE/DID at CDRH-FOISTATUS@fda.hhs.gov or 301-796-8118

Records processed under FOIA Request 2011-7654; Released 1/22/13

SECTION 6: PERFORMANCE TESTING

A. Results

The modified device (b) (4) [redacted] was evaluated to ensure that it functions in accordance with the design specifications and indications for use considering the change to the material and device specifications. The performance testing conducted on (b) (4) [redacted] is similar to the predicate device. **Table 6** summarizes the number of samples and testing performed for each specification. All testing performed on sterile devices were subjected to (b) [redacted] cycles of steam sterilization followed by functional testing. The outcome of all testing was acceptable. Acceptance criteria are based upon predicate device, clinical feedback, internal design control requirements, and the product specification.

Performance testing for the predicate device, Acclarent Cyclops Multi-Angle Endoscope (K100577), can be found in its 510(k) submission.

(b) (4)

[redacted]

Questions? Contact FDA/CDRH/OCE/DID at CDRH-FOISTATUS@fda.hhs.gov or 301-796-8118

(b)(4) Performance Testing

(b)(4) Performance Testing

(b)(4) Performance Testing

(b)(4) Performance Testing

(b)(4) Performance Testing

Records processed under FOIA Request 2011-7654; Released 1/22/13

SECTION 7: BIOCOMPATIBILITY

All materials, components, and processes used for Cyclops Gen 2 are similar in nature to those of the predicate device, Acclarent Cyclops Multi-Angle Endoscope (K100577), with the exception to the eyepiece, scope body, solder, direction of view dial, shaft rotation dial, and light post, which are components that do not have direct patient contact. (b) (4) [redacted] (b) (4) [redacted] The materials used in Cyclops Gen 2 are well known and commonly used in the medical device industry. (b) (4) [redacted] (b) (4) [redacted] (b) (4) [redacted] A summary of materials and direct patient contact[7] is listed in **Table 13** along with references to other 510(k)s that have been cleared with the same materials.

Table 13. Summary of Materials and Patient Contact

(b) (4) [redacted]

[7] DHM005074

Questions? Contact FDA/CDRH/OCE/DID at CDRH-FOISTATUS@fda.hhs.gov or 301-796-8118

Records processed under FOIA Request 2011-7654; Released 1/22/13

SECTION 8: CLEANING & STERILIZATION INFORMATION

(b) (4)

[redacted]

Questions? Contact FDA/CDRH/OCE/DID at CDRH-FOISTATUS@fda.hhs.gov or 301-796-8118

(b)(4) Sterilization

(b)(4) Sterilization

(b)(4) Sterilization

(b)(4) Sterilization

(b)(4) Sterilization

(b)(4) Sterilization

(b)(4) Sterilization

(b)(4) Sterilization

Records processed under FOIA Request 2011-7654; Released 1/22/13

SECTION 9: LETTERS TO FILE

At this time, there have been no modifications to K100577. There are no Letters to Files to report to the Agency.

Questions? Contact FDA/CDRH/OCE/DID at CDRH-FOISTATUS@fda.hhs.gov or 301-796-8118

Records processed under FOIA Request 2011-7654; Released 1/22/13

Acclarent

APPENDIX A: 510(k) SUMMARY

Sponsor/Submitter:	Acclarent, Inc. 1525-B O'Brien Drive Menlo Park, California 94025
Contact Person:	Keri Yen Regulatory Affairs Manager Phone: (650) 687-5874 Fax: (650) 687-4449
Date of Preparation:	January 12, 2011
Device Trade Name/ Model Number:	Acclarent Cyclops Multi-Angle Endoscope CYE002
Common Name:	Endoscope
Device Classification:	Class II
Regulation Number:	21 CFR 874.4760
Classification Name:	Nasopharyngoscope (Flexible or Rigid)
Product Code:	EOB
Predicate Devices:	Acclarent Cyclops Multi-Angle Endoscope (K100577)
Device Description:	The Acclarent Cyclops Multi-Angle Endoscope is a 4mm rigid endoscope that has the capability of varying direction of view from 10° to 90°, which is altered by the direction of view dial. The direction of view is indicated by visible markings on the scope body. Cyclops provides a 55° field of view and a depth of focus from 5 mm to 40mm. The device shaft can also rotate 320° to allow for visualization of structures without rotating the device; this is controlled by the shaft rotation dial. Small rare-earth permanent magnets are incorporated into the proximal scope control body (≤10 gauss at 2cm) and drive the change in the direction of view. A standard eyepiece located on the proximal end of the device is compatible with a standard camera coupler. The light post on the subject device is compatible with an ACMI light source. There are two stainless steel adapters that accompany the Acclarent Cyclops Multi-Angle Endoscope to facilitate connection with Wolf or Storz/Olympus medical light sources. The adapters connect to the light post. The Acclarent Cyclops Multi-Angle Endoscope is a reusable device and must be cleaned and sterilized according to the user manual prior to every use.

Questions? Contact FDA/CDRH/OCE/DID at CDRH-FOISTATUS@fda.hhs.gov or 301-796-8118

Records processed under FOIA Request 2011-7654; Released 1/22/13

Acclarent

Indications for Use: The Acclarent Cyclops Multi-Angle Endoscope is intended to provide an endoscopic means to view the nasal cavity and nasopharynx in an operating room environment.

Technological Characteristics:

Attribute	Predicate Device (Acclarent Cyclops Multi-Angle Endoscope)	Subject Device (Acclarent Cyclops Multi-Angle Endoscope)
510(k) number	K100577	TBD
Model Number	CYE001	CYE002
Rigidity	Rigid	Same
Viewing Optics	Lens	Same
Depth of View	5-45 mm	Same
Field of View	60°	55°
Direction of View	10° to 100°	10° to 90°
Shaft Body Diameter	4mm	Same
Working Length	6.89 inches (175mm)	Same
Illumination Fibers	Glass Fibers	Same
Light Source	Medical light source	Same

Performance Data: Performance testing of the Acclarent Cyclops Multi-Angle Endoscope consisted of bench testing and a cadaver study. Bench testing met all acceptance criteria for attributes such as distal shaft diameter, working length, field of view, fixed focus, direction of view, rotation of view, illumination, scope resolution, dial actuation forces, temperature testing, field strength testing of magnets, electrical safety, EMC testing, durability testing, environmental conditioning, compression testing, random vibration testing, and shock (free fall drop) testing. Clinical data was not necessary for the subject device. The performance data demonstrates that the Acclarent Cyclops Multi-Angle Endoscope performs as intended.

Validated Reprocessing Methods:

- Full manual cleaning with extended enzymatic soak plus general instrument automated washer
- Pre-vacuum steam sterilization (wrapped)

Summary of Substantial Equivalence: The Acclarent Cyclops Multi-Angle Endoscope is substantially equivalent to the predicate devices as confirmed through relevant performance tests and attributes.

Questions? Contact FDA/CDRH/OCE/DID at CDRH-FOISTATUS@fda.hhs.gov or 301-796-8118

Records processed under FOIA Request 2011-7654; Released 1/22/13

Acclarent

APPENDIX B: INDICATIONS FOR USE STATEMENT

510(k) Number (if known): _____

Trade Name: Acclarent Cyclops Multi-Angle Endoscope

Common Name: Endoscope

Indications For Use: The Acclarent Cyclops Multi-Angle Endoscope is intended to provide an endoscopic means to view the nasal cavity and nasopharynx in an operating room setting.

Prescription Use ___X____ (Part 21 CFR 801 Subpart D) AND/OR Over-The-Counter Use _____ (21 CFR 801 Subpart C)

(PLEASE DO NOT WRITE BELOW THIS LINE-CONTINUE ON ANOTHER PAGE OF NEEDED)

Concurrence of CDRH, Office of Device Evaluation (ODE)

Page __ of ___

(Posted November 13, 2003)

Questions? Contact FDA/CDRH/OCE/DID at CDRH-FOISTATUS@fda.hhs.gov or 301-796-8118

Records processed under FOIA Request 2011-7654; Released 1/22/13

APPENDIX C: DECLARATION OF CONFORMITY

I hereby attest that, as required by the risk analysis, all verification activities were performed by the designated individuals and the results of those activities demonstrated that the predetermined acceptance criteria were met.

Jeffrey Jones
Vice President, R&D

Date 1/12/11

I hereby attest that Acclarent, Inc. manufacturing facility is in conformance with the design control procedure requirements as specified in 21 CFR 820.30 and the records are available for review.

Mark Bishop
Vice President, Quality

Date 1/12/11

Questions? Contact FDA/CDRH/OCE/DID at CDRH-FOISTATUS@fda.hhs.gov or 301-796-8118

Records processed under FOIA Request 2011-7654; Released 1/22/13

APPENDIX D: INSTRUCTIONS FOR USE

Questions? Contact FDA/CDRH/OCE/DID at CDRH-FOISTATUS@fda.hhs.gov or 301-796-8118

Records processed under FOIA Request 2011-7654; Released 1/22/13

Acclarent

Instructions For Use

Acclarent Cyclops™ Multi-Angle Endoscope

Acclarent Cyclops™ Light Guide Cable Adapters

Acclarent Cyclops™ Models covered by these Instructions for Use:
CYE002

Check www.Acclarent.com at least annually for the current version of the Instructions for Use

Acclarent, Inc., 1525-B O'Brien Drive, Menlo Park, CA 94025 U.S.A.
Customer Service: +877-SPLASTY
+650-687-5888

Questions? Contact FDA/CDRH/OCE/DID at CDRH-FOISTATUS@fda.hhs.gov or 301-796-8118

Records processed under FOIA Request 2011-7654; Released 1/22/13

CAREFULLY READ ALL INSTRUCTIONS PRIOR TO USE.

CAUTION: Federal (U.S.A.) law restricts this device to sale by or on the order of a physician.

PACKAGING

STERILITY:

NON-STERILE: The Acclarent Cyclops endoscope is provided NON-STERILE. The Acclarent Cyclops endoscope must be cleaned and sterilized prior to its first use, before each subsequent use and after returning from repairs. See instructions below for cleaning and sterilization.

DESCRIPTION

The Acclarent Cyclops endoscope is a rigid endoscope. It incorporates two image adjustment controls.

Specifications	
Working Length	175mm
Shaft Diameter	4 mm
Shaft Direction Control	Allows shaft to be rotated between 0° and 160° in either direction from the 12 o'clock rotation position
Angle Control	Angle of view can be adjusted between 10° and 90°.

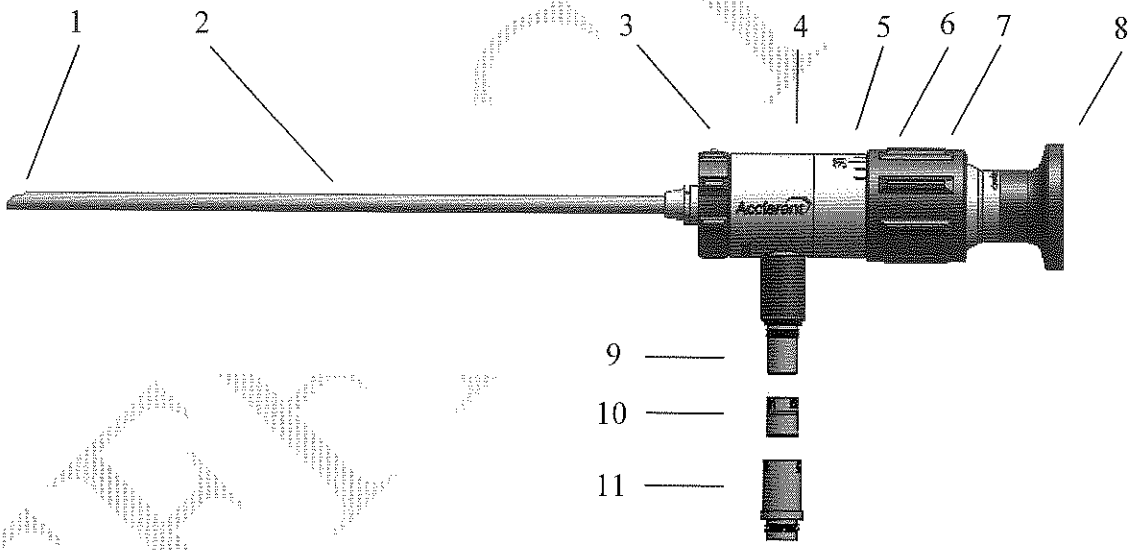

Figure 1. Acclarent Cyclops Multi-Angle Endoscope

Legend:

1) Distal Window
2) Shaft
3) Shaft Direction Control
4) Scope Body
5) Angle of View Scale
6) Angle Indicator (small bump on surface of Angle Control)
7) Angle Control
8) Eyepiece
9) Light Guide Post - ACMI Light Cable Configuration (fixed)
10) Wolf Light Cable Adapter (detachable)
11) Olympus / Storz Light Cable Adapter (detachable)

Questions? Contact FDA/CDRH/OCE/DID at CDRH-FOISTATUS@fda.hhs.gov or 301-796-8018

Records processed under FOIA Request 2011-7654; Released 1/22/13

INDICATIONS FOR USE

The Acclarent Cyclops Multi-Angle Endoscope is intended to provide an endoscopic means to view the nasal cavity and nasopharynx in an operating room environment.

CONTRAINDICATIONS

Do not use Acclarent Cyclops on patients who already have active implanted devices that would be affected by a magnetic field (e.g. pacemaker, implantable cardioverter-defibrillator, cochlear implant and deep brain stimulator) because Acclarent Cyclops contains small rare-earth permanent magnets. Additionally, do not use Acclarent Cyclops on patients with inferior vena cava filters that have been implanted within the previous two weeks.

WARNINGS

- NON-STERILE: The Acclarent Cyclops endoscope is provided NON-STERILE. The Acclarent Cyclops endoscope must be cleaned and sterilized prior to its first use, before each subsequent use and after returning from repairs. See instructions below for cleaning and sterilization.
- Do not use the Acclarent Cyclops endoscope if you are unable to clean and sterilize according to the validated procedures contained in these instructions.
- Do not use a damaged or defective Acclarent Cyclops endoscope. Inspect the Acclarent Cyclops endoscope prior to each examination or procedure and before sterilization based on the instructions below.
- The connection between the Acclarent Cyclops endoscope and the light source can become very hot. Use care when handling and do not rest the scope directly on a patient or flammable material.
- Surface temperature near the distal tip may exceed 41°C if the device is operated at maximum brightness for extended periods of time. To avoid burns caused by an overheated distal tip or distal window, light cables with a diameter of 5.0mm or smaller should be used. Acclarent recommends the use of a 3.5mm fiber optic light cable. Always adjust the light source to the minimum light output necessary to illuminate the endoscopic image. Prior to disconnecting the fiber optic cable, allow the endoscope to cool.
- These Instructions for Use are meant to facilitate use of the Acclarent Cyclops and are not instructions on how to perform endoscopic procedures.

PRECAUTIONS

- Do not bend the Acclarent Cyclops.
- Do not hold the Acclarent Cyclops by its shaft, as this can cause damage.
- The minimum angle of view allowed by the Acclarent Cyclops is 10°. Use caution when advancing the scope.
- To maintain optical quality, do not clean the Acclarent Cyclops or light cable adapters in an ultrasonic bath.
- Do not accelerate the cooling of the Acclarent Cyclops, as this can cause damage.
- Do not flash sterilize the Acclarent Cyclops.
- Cleaning and sterilization can only be guaranteed if the Acclarent Cyclops is cleaned and sterilized according to properly validated methods. The minimum cleaning and sterilization procedures are provided in this IFU. The Automated Cleaning procedure has not been validated as effective in accomplishing disinfection. It is the responsibility of the user to qualify any deviations from the recommended procedures.
- Manual Cleaning PLUS Automated Cleaning must be performed each time the Acclarent Cyclops and light cable adapters are reprocessed.
- If the Acclarent Cyclops was used in a patient with Creutzfeld-Jakob disease (CJD), suspected CJD or possible variants of CJD, Acclarent recommends safely disposing of the Acclarent Cyclops. For disposal instructions, see Section D.

Questions? Contact FDA/CDRH/OCE/DID at CDRH-FOISTATUS@fda.hhs.gov or 301-796-8018

Records processed under FOIA Request 2011-7654; Released 1/22/13

- When the angle control is set to greater than 70°, the illumination provided by the Acclarent Cyclops becomes less intense.

INSTRUCTIONS FOR USE

A. Inspection and Testing	1) Remove and discard the protection caps from the distal tip, eyepiece and light guide post immediately upon receipt. 2) Inspect the endoscope immediately upon receipt, and before and after every procedure. 3) Inspect the distal window and eyepiece for scratches, chips, fingerprints or residual debris by observing reflected light on the surfaces of the distal window and eyepiece. 4) To test image quality, look through the eyepiece. The image should be clear and distinct. If the distal window, eyepiece lens and light guide post surface are cloudy, dirty or scratched, or if the shaft is bent, scratched, dented, corroded, pitted or exhibits other surface irregularities, the image may not be clear. If the image is not clear, the Acclarent Cyclops should not be used, and should be sent in for repair or taken out of service. 5) Check light transmission by pointing the distal window of the Acclarent Cyclops at a light source and inspecting the light transmitting surface of the light guide post connector (see Figure 2). If the glass light fibers are broken, the light transmitting surface of the light guide post will illuminate unevenly. Individual broken fibers do not necessarily result in a noticeable reduction in image quality. However, if approximately 25% of the transmitting surface of the light guide post is illuminating unevenly, the endoscope should not be used, and should be sent in for repair or taken out of service. 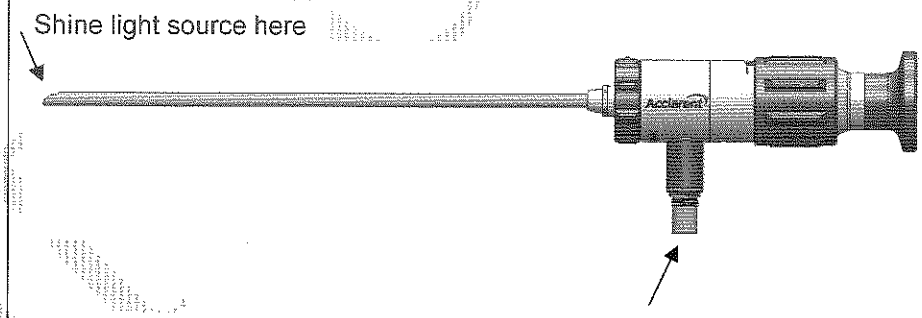 **Figure 2. Method for checking light transmission** 6) Test the controls. Rotate the angle control and shaft control while looking through the eyepiece. Ensure that the image changes appropriately. Acclarent Cyclops requires no lubrication to maintain proper function. If the image does not change appropriately, the endoscope should not be used, and should be sent in for repair or taken out of service.
B. Point of Use:	1) Assembly: a. Connect appropriate light cable adapters as required. i. To connect the Wolf light cable adapter, slide the adapter over the light guide post and tighten in place using the screw threads. ii. To connect the Olympus / Storz light cable adapter, slide the

Questions? Contact FDA/CDRH/OCE/DID at CDRH-FOISTATUS@fda.hhs.gov or 301-796-5018

Records processed under FOIA Request 2011-7654; Released 1/22/13

adapter over the light guide post and tighten in place using the screw threads.

b. If a camera is utilized, connect the camera coupler to the eyepiece.
   i. The standard B-cup eyepiece can be used with cameras or universal C-mount camera couplers .

c. Connect the light guide cable to the light guide post/adapter. Only light cables with a diameter of 5.0mm and smaller should be used to prevent overheating of the distal tip.

2) Usage:

a. Observe the respective manufacturer's instructions when using the Acclarent Cyclops endoscope with other implements, instruments or optical cables.

b. Acclarent recommends use with Xenon (up to 300W) light sources.

c. Make sure that the distal window, eyepiece lens or light guide post surface do not contact abrasive surfaces. Anti-fog solution (e.g. Covidien's FRED™ or DeRoyal DeFogger™) may be used with Acclarent Cyclops.to help prevent fogging of the distal window and eyepiece lens.

d. Handle the Acclarent Cyclops endoscope with care. Hard impacts, particularly to the distal end, may result in damage or cracks.

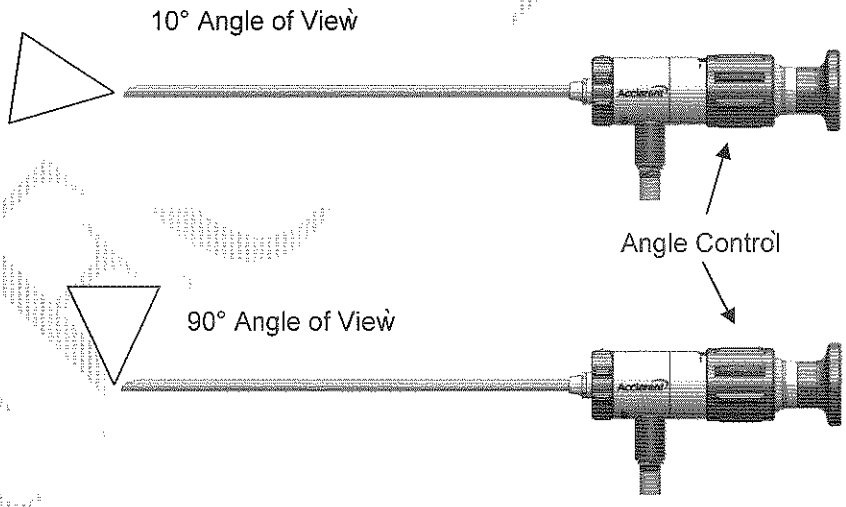

Figure 3. Acclarent Cyclops Angle of View

e. To change the Acclarent Cyclops endoscope's angle of view, rotate the Angle Control. The angle indicator on the Angle Control aligns with the set of reference markings on the body of the endoscope and displays the approximate angle of view selected by the user. The Acclarent Cyclops endoscope displays angles between 10° and 90° as shown in Figure 3.

f. To rotate the Acclarent Cyclops endoscope's shaft, rotate the Shaft Direction Control. The scope allows shaft rotation of 160° in both directions from the 12 o'clock rotational position. A marker that displays the 12 o'clock rotational position is visible in the endoscopic view. An indicator on the Shaft Direction Control dial illustrates the location of the 12 o'clock rotational position.

Questions? Contact FDA/CDRH/OCE/DID at CDRH-FOISTATUS@fda.hhs.gov or 301-796-8118

Records processed under FOIA Request 2011-7654; Released 1/22/13

C. Point of Use Cleaning	The following steps are to be performed at the point of use: 1) During surgery, keep the device moist by periodically wiping with a wet gauze or a lap sponge and sterile water. 2) After surgery has concluded, use a wet gauze or a lap sponge and sterile water to wipe off any visible debris. Keep the device moist by adding a moist towel to the transport container until it can be cleaned according to the reprocessing instructions described below. Cleaning should be completed on the Acclarent Cyclops and the light cable adapters within 30 minutes following their use.
D. General Considerations for Endoscope reprocessing:	**Complete Preparation for Cleaning, Manual Cleaning plus Automated Cleaning and Sterilization each time when reprocessing the Acclarent Cyclops and light cable adapters.** 1) All reprocessing should be completed by personnel trained in the appropriate reprocessing techniques and safety. All reprocessing personnel should don appropriate personal protective attire. 2) Cleaning should be completed on the Acclarent Cyclops and the light cable adapters within 30 minutes following their use. Keep device continuously moist with a moist towel prior to cleaning. 3) If the Acclarent Cyclops endoscope was used in a patient with Creutzfeld-Jakob disease (CJD), suspected CJD or possible variants of CJD, Acclarent recommends safely disposing of the Acclarent Cyclops endoscope. The safest and most unambiguous method for ensuring that there is no risk of residual infectivity on contaminated instruments and other materials is to discard and destroy them by incineration. For more information regarding exposure to Creutzfeld-Jakob disease (CJD) or possible variants of CJD, and for information about disposing contaminated devices, please see the following references: a. Brown, S. A., Merritt, K., Woods, T. O., & Busick, D. N. (2005). Effects on instruments of the World Health Organization – Recommended protocols for decontamination after possible exposure to transmissible spongiform encephalopathy contaminated tissue. Appl Biomater, 72B, 186-190. DOI 10.1002/jbm.b.30125. b. World Health Organization Infection Control Guideline for Transmissible Spongiform Encephalopathies. Geneva, Switzerland, March, 1999 available from: http://www.who.int/csr/resources/publications/bse/WHO_CDS_CSR_APH_2000_3/en/ ⚠ **CAUTION**: Do not place the Acclarent Cyclops directly on or next to an active implantable device that may be affected by magnetic fields as the device contains small rare earth permanent magnets.
E. Preparation for Cleaning	1) Disassembly a. Disconnect the light cable from the light guide post. b. If a camera was utilized, disconnect the camera coupling device from the eyepiece. c. Remove any light cable adapters used. d. Keep Acclarent Cyclops and light cable adapters continuously moist until Manual Cleaning can commence at the point of central reprocessing. The device may be kept moist by adding a moist towel

Questions? Contact FDA/CDRH/OCE/DID at CDRH-FOISTATUS@fda.hhs.gov or 301-796-8118

Records processed under FOIA Request 2011-7654; Released 1/22/13

	to the transport container.
F. Cleaning: Manual	The following steps are to be performed at the point of central reprocessing: 1) Manual Cleaning: a. Prepare a neutral pH enzymatic detergent (e.g. Enzol®) per the manufacturer's instructions (e.g. for Enzol®) mix 1 oz/gal with lukewarm tap water). Prepare a fresh mixture of cleaning solution for each use. b. Immerse the Acclarent Cyclops and light cable adapters entirely in the detergent solution for at least 15 minutes. c. Use a soft bristle brush (e.g. a standard size tooth brush) to remove any debris / soil from the Acclarent Cyclops and a soft bristled pipe cleaner for the light cable adapters while they are submerged. Ensure that the brush and the pipe cleaner can access the hard to reach areas such as cracks, crevices and threads on the light guide post and light guide adapters. Ensure that all visible debris is removed.. d. Rinse the endoscope and light cable adapters under cold running tap water for at least 1 minute. ⚠ **CAUTION:** Manual Cleaning PLUS Automated Cleaning must be performed each time the Acclarent Cyclops and light cable adapters are reprocessed. ⚠ **CAUTION:** The Automated Cleaning reprocessing parameters have not been validated as effective in accomplishing *disinfection* of the Acclarent Cyclops.
G. Cleaning: Automated	The following steps are to be performed at the point of central reprocessing after completion of Manual Cleaning (described above): 1) Automated Cleaning: a. Place the Acclarent Cyclops together with its light cable adapters into a separate mesh basket. Ensure that the Acclarent Cyclops and light cable adapters do not touch each other when placed into the basket. b. Place a mesh screen over the basket to prevent the Acclarent Cyclops and light cable adapters from coming out of the basket during processing. c. Place the mesh basket with Acclarent Cyclops and light cable adapters into a general instrument washer-disinfector (e.g. Amsco Steris 444 Washer / Disinfector) to clean the Acclarent Cyclops and light cable adapters. d. Select a neutral pH enzymatic detergent (e.g. Enzol) and a neutral pH instrument cleaner (e.g. RenuKlenz™). Prepare per the instructions of the detergent manufacturer (for example, Enzol 1oz/gal and RenuKlenz ¼oz/gallon). Prepare a fresh mixture of cleaning solution for each use. e. Run the washing machine cycle per the instructions provided by the manufacturer. The minimum cleaning cycle is described below in table 1: **Table 1: Automatic Cleaning Parameters:**

Questions? Contact FDA/CDRH/OCE/DID at CDRH-FOISTATUS@fda.hhs.gov or 301-796-8118

Records processed under FOIA Request 2011-7654; Released 1/22/13

Phase	Recirculation Time	Water Temperature	Detergent Type
Pre Wash	3 minutes	Cold tap water	N/A
Enzyme Wash	5 minutes	Hot tap water	Neutral pH enzymatic detergent
Wash 1	5 minutes	65°C (Set Point)	Neutral pH instrument cleaner
Rinse 1	2 minutes	Hot tap water	N/A
Dry Phase	7 minutes	115°C	N/A

f. Remove the Acclarent Cyclops and light cable adapters from the washing machine following the cleaning cycle and after allowing sufficient time for the devices to cool so they can be safely handled.
g. Inspect the devices to ensure that all visible soil, stains and debris have been removed.

⚠ **CAUTION**: Manual Cleaning PLUS Automated Cleaning must be performed each time the Acclarent Cyclops and light cable adapters are reprocessed.

CAUTION: The Automated Cleaning reprocessing parameters have not been validated as effective in accomplishing *disinfection* of the Acclarent Cyclops.

H. Post-cleaning Inspection and Testing

1) After cleaning is complete, inspect the Acclarent Cyclops per the instructions in Section A.

I. Sterilization: Steam:

1) Do not "Flash" sterilize the Acclarent Cyclops or light cable adapters.
2) Ensure the Acclarent Cyclops and light cable adapters are disassembled before sterilization.
3) Double wrap the Acclarent Cyclops and light cable adapters with 1-ply polypropylene wrap (e.g. Kimguard KC600).
4) Complete sterilization per AAMI ST79:2006, A1:2008,A2:2009. The validated parameters are listed in Table 2.

Table 2: Parameters for Steam Sterilization

Sterilization Method	Pre-Vacuum
Pulses (minimum)	3
Temperature	132°C / 270° F
Exposure time	4 minutes
Drying Time	20 minutes

5) After sterilization, allow the Acclarent Cyclops, and light cable adapters to cool down to room temperature. Do not accelerate cooling, as this may damage the Acclarent Cyclops endoscope.

J. Storage

1) Store the Acclarent Cyclops endoscope in a dry, clean and safe place at room temperature, in its polypropylene wrap.
2) Acclarent does not recommend storing the Acclarent Cyclops and light cable adapters in their shipping box.

K. Disposal

1) For disposal, observe standard protocols for disposal of surgical devices (see Section D for references).

Questions? Contact FDA/CDRH/OCE/DID at CDRH-FOISTATUS@fda.hhs.gov or 301-796-8118

Records processed under FOIA Request 2011-7654; Released 1/22/13

Technical service, maintenance or repairs:

- Contact Acclarent Customer Service:
- Acclarent, Inc.
  1525-B O'Brien.Drive
  Menlo Park, CA 94025
  U.S.A.
- Toll Free: 1-877-SPLASTY (1-877-775-2789)
- Before returning any product to Acclarent, please contact Acclarent Customer Service to obtain a return goods authorization and product return packaging.
- Please clean and sterilize the endoscope and mark it as "Sterilized" prior to return.

GRAPHIC SYMBOLS CONTAINED IN DEVICE LABELING

Non Sterile	Non-Sterile	⟷	Working Length
i	Consult Instructions For Use	Rx ONLY	On Order of Physician Only
	Scope Outer Diameter	REF	Product Code
SN	Serial Number		Light Cable Adapter
Latex	Contains No Natural Rubber Latex	EC REP	European Authorized Representative
CE	CE Mark		Keep Away from Sunlight
	Manufacturer		Manufacturing Date
	Acclarent Cyclops Multi-Angle Endoscope	⚠	Caution

©2010 Acclarent, Inc. All rights reserved.

Questions? Contact FDA/CDRH/OCE/DID at CDRH-FOISTATUS@fda.hhs.gov or 301-796-8118

Records processed under FOIA Request 2011-7654; Released 1/22/13

Manufactured for:
Acclarent, Inc.
1525-B O'Brien Drive
Menlo Park, CA 94025

USA
Toll Free: 1-877-SPLASTY (1-877-775-2789)

ARCHIVE

Questions? Contact FDA/CDRH/OCE/DID at CDRH-FOISTATUS@fda.hhs.gov or 301-796-8118

Records processed under FOIA Request 2011-7654; Released 1/22/13

Questions? Contact FDA/CDRH/OCE/DID at CDRH-FOISTATUS@fda.hhs.gov or 301-796-8118

(b)(4) Draft Instruction

(b)(4) Draft Instruction

(b)(4) Draft Instruction

(b)(4) Draft Instruction

(b)(4) Draft Instruction

(b)(4) Draft Instruction

(b)(4) Draft Instruction

(b)(4) Draft Instruction

(b)(4) Draft Instruction

(b)(4) Draft Instruction

(b)(4) Draft Instruction

(b)(4) Draft Instruction

(b)(4) Draft Instruction

Records processed under FOIA Request 2011-7654; Released 1/22/13

APPENDIX E: DEVICE LABELING

Questions? Contact FDA/CDRH/OCE/DID at CDRH-FOISTATUS@fda.hhs.gov or 301-796-8118

(b)(4) Label Specifications

(b)(4) Label Specifications

Records processed under FOIA Request 2011-7654; Released 1/22/13

APPENDIX F: RISK MANAGEMENT DOCUMENT

Questions? Contact FDA/CDRH/OCE/DID at CDRH-FOISTATUS@fda.hhs.gov or 301-796-8118

(b)(4) Risk Management

(b)(4) Risk Management

Records processed under FOIA Request 2011-7654; Released 1/22/13

Questions? Contact FDA/CDRH/OCE/DID at CDRH-FOISTATUS@fda.hhs.gov or 301-796-8118

(b)(4) Risk Management

Records processed under FOIA Request 2011-7654; Released 1/22/13

Form Approved: OMB No. 0910-0120; Expiration Date: 8/31/10

Department of Health and Human Services
Food and Drug Administration

STANDARDS DATA REPORT FOR 510(k)s

(To be filled in by applicant)

This report and the Summary Report Table are to be completed by the applicant when submitting a 510(k) that references a national or international standard. A separate report is required for each standard referenced in the 510(k).

TYPE OF 510(K) SUBMISSION

☐ Traditional ☑ Special ☐ Abbreviated

STANDARD TITLE [1]

AAMI/ANSI ST35:2003 Safe handling and biological decontamination of reusable medical devices in healthcare facilities

Please answer the following questions	*Yes*	*No*
Is this standard recognized by FDA [2]?	☐	☑
FDA Recognition number [3]	# N/A	
Was a third party laboratory responsible for testing conformity of the device to this standard identified in the 510(k)?	☑	☐
Is a summary report [4] describing the extent of conformance of the standard used included in the 510(k)? If no, complete a summary report table.	☐	☑
Does the test data for this device demonstrate conformity to the requirements of this standard as it pertains to this device?	☑	☐
Does this standard include acceptance criteria? If no, include the results of testing in the 510(k).	☑	☐
Does this standard include more than one option or selection of tests? If yes, report options selected in the summary report table.	☑	☐
Were there any deviations or adaptations made in the use of the standard?	☐	☑
If yes, were deviations in accordance with the FDA supplemental information sheet (SIS) [5]?	☐	☐
Were deviations or adaptations made beyond what is specified in the FDA SIS? If yes, report these deviations or adaptations in the summary report table.	☐	☑
Were there any exclusions from the standard? If yes, report these exclusions in the summary report table.	☐	☑
Is there an FDA guidance [6] that is associated with this standard?	☐	☑
If yes, was the guidance document followed in preparation of this 510k?	☐	☐

Title of guidance: _____

[1] The formatting convention for the title is: [SDO] [numeric identifier] [title of standard] [date of publication]

[2] Authority [21 U.S.C. 360d], www.fda.gov/cdrh/stdsprog.html

[3] http://www.accessdata.fda.gov/scripts/cdrh/cfdocs/cfStandards/search.cfm

[4] The summary report should include: any adaptations used to adapt to the device under review (for example, alternative test methods); choices made when options or a selection of methods are described; deviations from the standard; requirements not applicable to the device; and the name and address of the test laboratory or certification body involved in conformance assessment to this standard. The summary report includes information on all standards utilized during the development of the device.

[5] The supplemental information sheet (SIS) is additional information which is necessary before FDA recognizes the standard. Found at http://www.accessdata.fda.gov/scripts/cdrh/cfdocs/cfStandards/search.cfm

[6] The online search for CDRH Guidance Documents can be found at www.fda.gov/cdrh/guidance.html

Questions? Contact FDA/CDRH/OCE/DID at CDRH-FOISTATUS@fda.hhs.gov or 301-796-8118

Records processed under FOIA Request 2011-7654; Released 1/22/13

EXTENT OF STANDARD CONFORMANCE SUMMARY REPORT TABLE

STANDARD TITLE

AAMI/ANSI ST35:2003 Safe handling and biological decontamination of reusable medical devices in healthcare facilities

CONFORMANCE WITH STANDARD SECTIONS*

SECTION NUMBER	SECTION TITLE	CONFORMANCE?
7	Decontamination process	☑ Yes ☐ No ☐ N/A

TYPE OF DEVIATION OR OPTION SELECTED *

To be rendered safe...some medical devices must be cleaned and subjected to a microbial process.

DESCRIPTION

Cleaning and Steam Sterilization processes were validated.

JUSTIFICATION

Based on product design and intended use, device is categorized as a semicritical device.

SECTION NUMBER	SECTION TITLE	CONFORMANCE?
		☐ Yes ☐ No ☐ N/A

TYPE OF DEVIATION OR OPTION SELECTED *

DESCRIPTION

JUSTIFICATION

SECTION NUMBER	SECTION TITLE	CONFORMANCE?
		☐ Yes ☐ No ☐ N/A

TYPE OF DEVIATION OR OPTION SELECTED *

DESCRIPTION

JUSTIFICATION

* For completeness list all sections of the standard and indicate whether conformance is met. If a section is not applicable (N/A) an explanation is needed under "justification." Some standards include options, so similar to deviations, the option chosen needs to be described and adequately justified as appropriate for the subject device. Explanation of all deviations or description of options selected when following a standard is required under "type of deviation or option selected," "description" and "justification" on the report. More than one page may be necessary.

* Types of deviations can include an exclusion of a section in the standard, a deviation brought out by the FDA supplemental information sheet (SIS), a deviation to adapt the standard to the device, or any adaptation of a section.

Paperwork Reduction Act Statement

Public reporting burden for this collection of information is estimated to average 1 hour per response, including the time for reviewing instructions, searching existing data sources, gathering and maintaining the data needed, and completing and reviewing the collection of information. Send comments regarding this burden estimate or any other aspect of this collection of information, including suggestions for reducing this burden, to:

Center for Devices and Radiological Health
1350 Piccard Drive
Rockville, MD 20850

An agency may not conduct or sponsor, and a person is not required to respond to, a collection of information unless it displays a currently valid OMB control number.

Questions? Contact FDA/CDRH/OCE/DID at CDRH-FOISTATUS@fda.hhs.gov or 301-796-8118

Records processed under FOIA Request 2011-7654; Released 1/22/13

Form Approved: OMB No. 0910-0120; Expiration Date: 8/31/10

Department of Health and Human Services
Food and Drug Administration

STANDARDS DATA REPORT FOR 510(k)s

(To be filled in by applicant)

This report and the Summary Report Table are to be completed by the applicant when submitting a 510(k) that references a national or international standard. A separate report is required for each standard referenced in the 510(k).

TYPE OF 510(K) SUBMISSION

☐ Traditional ☑ Special ☐ Abbreviated

STANDARD TITLE [1]

(b) (4)

Please answer the following questions	*Yes*	*No*
Is this standard recognized by FDA [2]?	☑	☐
FDA Recognition number [3]	# 9-39	
Was a third party laboratory responsible for testing conformity of the device to this standard identified in the 510(k)?	☑	☐
Is a summary report [4] describing the extent of conformance of the standard used included in the 510(k)? If no, complete a summary report table.	☑	☐
Does the test data for this device demonstrate conformity to the requirements of this standard as it pertains to this device?	☑	☐
Does this standard include acceptance criteria? If no, include the results of testing in the 510(k).	☐	☑
Does this standard include more than one option or selection of tests? If yes, report options selected in the summary report table.	☐	☑
Were there any deviations or adaptations made in the use of the standard?	☐	☑
If yes, were deviations in accordance with the FDA supplemental information sheet (SIS) [5]?	☐	☐
Were deviations or adaptations made beyond what is specified in the FDA SIS? If yes, report these deviations or adaptations in the summary report table.	☐	☑
Were there any exclusions from the standard? If yes, report these exclusions in the summary report table.	☐	☑
Is there an FDA guidance [6] that is associated with this standard?	☐	☑
If yes, was the guidance document followed in preparation of this 510k?	☐	☐

Title of guidance: _____

[1] The formatting convention for the title is: [SDO] [numeric identifier] [title of standard] [date of publication]

[2] Authority [21 U.S.C. 360d], www.fda.gov/cdrh/stdsprog.html

[3] http://www.accessdata.fda.gov/scripts/cdrh/cfdocs/cfStandards/search.cfm

[4] The summary report should include: any adaptations used to adapt to the device under review (for example, alternative test methods); choices made when options or a selection of methods are described; deviations from the standard; requirements not applicable to the device; and the name and address of the test laboratory or certification body involved in conformance assessment to this standard. The summary report includes information on all standards utilized during the development of the device.

[5] The supplemental Information sheet (SIS) is additional information which is necessary before FDA recognizes the standard. Found at http://www.accessdata.fda.gov/scripts/cdrh/cfdocs/cfStandards/search.cfm

[6] The online search for CDRH Guidance Documents can be found at www.fda.gov/cdrh/guidance.html

Questions? Contact FDA/CDRH/OCE/DID at CDRH-FOISTATUS@fda.hhs.gov or 301-796-8118

Records processed under FOIA Request 2011-7654; Released 1/22/13

EXTENT OF STANDARD CONFORMANCE SUMMARY REPORT TABLE

STANDARD TITLE

CONFORMANCE WITH STANDARD SECTIONS*

SECTION NUMBER	SECTION TITLE	CONFORMANCE? ☐ Yes ☐ No ☑ N/A
TYPE OF DEVIATION OR OPTION SELECTED*		
DESCRIPTION		
JUSTIFICATION		

SECTION NUMBER	SECTION TITLE	CONFORMANCE? ☐ Yes ☐ No ☐ N/A
TYPE OF DEVIATION OR OPTION SELECTED*		
DESCRIPTION		
JUSTIFICATION		

SECTION NUMBER	SECTION TITLE	CONFORMANCE? ☐ Yes ☐ No ☐ N/A
TYPE OF DEVIATION OR OPTION SELECTED*		
DESCRIPTION		
JUSTIFICATION		

* For completeness list all sections of the standard and indicate whether conformance is met. If a section is not applicable (N/A) an explanation is needed under "justification." Some standards include options, so similar to deviations, the option chosen needs to be described and adequately justified as appropriate for the subject device. Explanation of all deviations or description of options selected when following a standard is required under "type of deviation or option selected," "description" and "justification" on the report. More than one page may be necessary.

* Types of deviations can include an exclusion of a section in the standard, a deviation brought out by the FDA supplemental information sheet (SIS), a deviation to adapt the standard to the device, or any adaptation of a section.

Paperwork Reduction Act Statement

Public reporting burden for this collection of information is estimated to average 1 hour per response, including the time for reviewing instructions, searching existing data sources, gathering and maintaining the data needed, and completing and reviewing the collection of information. Send comments regarding this burden estimate or any other aspect of this collection of information, including suggestions for reducing this burden, to:

Center for Devices and Radiological Health
1350 Piccard Drive
Rockville, MD 20850

An agency may not conduct or sponsor, and a person is not required to respond to, a collection of information unless it displays a currently valid OMB control number.

Questions? Contact FDA/CDRH/OCE/DID at CDRH-FOISTATUS@fda.hhs.gov or 301-796-8118

Records processed under FOIA Request 2011-7654; Released 1/22/13

Form Approved: OMB No. 0910-0120; Expiration Date: 8/31/10

Department of Health and Human Services
Food and Drug Administration

STANDARDS DATA REPORT FOR 510(k)s

(To be filled in by applicant)

This report and the Summary Report Table are to be completed by the applicant when submitting a 510(k) that references a national or international standard. A separate report is required for each standard referenced in the 510(k).

TYPE OF 510(K) SUBMISSION

☐ Traditional ☑ Special ☐ Abbreviated

STANDARD TITLE [1]

(b) (4)

Please answer the following questions	*Yes*	*No*
Is this standard recognized by FDA [2]?	☑	☐
FDA Recognition number [3] # 9-38		
Was a third party laboratory responsible for testing conformity of the device to this standard identified in the 510(k)?	☑	☐
Is a summary report [4] describing the extent of conformance of the standard used included in the 510(k)? If no, complete a summary report table.	☑	☐
Does the test data for this device demonstrate conformity to the requirements of this standard as it pertains to this device?	☑	☐
Does this standard include acceptance criteria? If no, include the results of testing in the 510(k).	☐	☑
Does this standard include more than one option or selection of tests? If yes, report options selected in the summary report table.	☑	☐
Were there any deviations or adaptations made in the use of the standard?	☐	☑
If yes, were deviations in accordance with the FDA supplemental information sheet (SIS) [5]?	☐	☐
Were deviations or adaptations made beyond what is specified in the FDA SIS? If yes, report these deviations or adaptations in the summary report table.	☐	☑
Were there any exclusions from the standard? If yes, report these exclusions in the summary report table.	☐	☑
Is there an FDA guidance [6] that is associated with this standard?	☐	☑
If yes, was the guidance document followed in preparation of this 510k?	☐	☐

Title of guidance: _____

[1] The formatting convention for the title is: [SDO] [numeric identifier] [title of standard] [date of publication]

[2] Authority [21 U.S.C. 360d], www.fda.gov/cdrh/stdsprog.html

[3] http://www.accessdata.fda.gov/scripts/cdrh/cfdocs/cfStandards/search.cfm

[4] The summary report should include: any adaptations used to adapt to the device under review (for example, alternative test methods); choices made when options or a selection of methods are described; deviations from the standard; requirements not applicable to the device; and the name and address of the test laboratory or certification body involved in conformance assessment to this standard. The summary report includes information on all standards utilized during the development of the device.

[5] The supplemental information sheet (SIS) is additional information which is necessary before FDA recognizes the standard. Found at http://www.accessdata.fda.gov/scripts/cdrh/cfdocs/cfStandards/search.cfm

[6] The online search for CDRH Guidance Documents can be found at www.fda.gov/cdrh/guidance.html

PSC Graphics (301) 443-1090 EF

Questions? Contact FDA/CDRH/OCE/DID at CDRH-FOISTATUS@fda.hhs.gov or 301-796-8118

Records processed under FOIA Request 2011-7654; Released 1/22/13

EXTENT OF STANDARD CONFORMANCE SUMMARY REPORT TABLE

STANDARD TITLE

[redacted]

CONFORMANCE WITH STANDARD SECTIONS*

SECTION NUMBER	SECTION TITLE	CONFORMANCE?
4	[redacted]	☑ Yes ☐ No ☐ N/A

TYPE OF DEVIATION OR OPTION SELECTED*

[redacted]

DESCRIPTION

[redacted]

JUSTIFICATION

[redacted]

SECTION NUMBER	SECTION TITLE	CONFORMANCE?
		☐ Yes ☐ No ☐ N/A

TYPE OF DEVIATION OR OPTION SELECTED*

DESCRIPTION

JUSTIFICATION

SECTION NUMBER	SECTION TITLE	CONFORMANCE?
		☐ Yes ☐ No ☐ N/A

TYPE OF DEVIATION OR OPTION SELECTED*

DESCRIPTION

JUSTIFICATION

* For completeness list all sections of the standard and indicate whether conformance is met. If a section is not applicable (N/A) an explanation is needed under "justification." Some standards include options, so similar to deviations, the option chosen needs to be described and adequately justified as appropriate for the subject device. Explanation of all deviations or description of options selected when following a standard is required under "type of deviation or option selected," "description" and "justification" on the report. More than one page may be necessary.

* Types of deviations can include an exclusion of a section in the standard, a deviation brought out by the FDA supplemental information sheet (SIS), a deviation to adapt the standard to the device, or any adaptation of a section.

Paperwork Reduction Act Statement

Public reporting burden for this collection of information is estimated to average 1 hour per response, including the time for reviewing instructions, searching existing data sources, gathering and maintaining the data needed, and completing and reviewing the collection of information. Send comments regarding this burden estimate or any other aspect of this collection of information, including suggestions for reducing this burden, to:

Center for Devices and Radiological Health
1350 Piccard Drive
Rockville, MD 20850

An agency may not conduct or sponsor, and a person is not required to respond to, a collection of information unless it displays a currently valid OMB control number.

Questions? Contact FDA/CDRH/OCE/DID at CDRH-FOISTATUS@fda.hhs.gov or 301-796-8118

Records processed under FOIA Request 2011-7654; Released 1/22/13

Form Approved: OMB No. 0910-0120; Expiration Date: 8/31/10

Department of Health and Human Services
Food and Drug Administration

STANDARDS DATA REPORT FOR 510(k)s

(To be filled in by applicant)

This report and the Summary Report Table are to be completed by the applicant when submitting a 510(k) that references a national or international standard. A separate report is required for each standard referenced in the 510(k).

TYPE OF 510(K) SUBMISSION

☐ Traditional ☑ Special ☐ Abbreviated

STANDARD TITLE [1]

[redacted]

Please answer the following questions	*Yes*	*No*
Is this standard recognized by FDA [2]?	☑	☐
FDA Recognition number [3] # 14-295		
Was a third party laboratory responsible for testing conformity of the device to this standard identified in the 510(k)?	☑	☐
Is a summary report [4] describing the extent of conformance of the standard used included in the 510(k)? If no, complete a summary report table.	☐	☑
Does the test data for this device demonstrate conformity to the requirements of this standard as it pertains to this device?	☑	☐
Does this standard include acceptance criteria? If no, include the results of testing in the 510(k).	☑	☐
Does this standard include more than one option or selection of tests? If yes, report options selected in the summary report table.	☑	☐
Were there any deviations or adaptations made in the use of the standard?	☐	☑
If yes, were deviations in accordance with the FDA supplemental information sheet (SIS) [5]?	☐	☐
Were deviations or adaptations made beyond what is specified in the FDA SIS? If yes, report these deviations or adaptations in the summary report table.	☐	☑
Were there any exclusions from the standard? If yes, report these exclusions in the summary report table.	☐	☑
Is there an FDA guidance [6] that is associated with this standard?	☑	☐
If yes, was the guidance document followed in preparation of this 510k?	☑	☐

Title of guidance: [redacted]

[1] The formatting convention for the title is: [SDO] [numeric identifier] [title of standard] [date of publication]

[2] Authority [21 U.S.C. 360d], www.fda.gov/cdrh/stdsprog.html

[3] http://www.accessdata.fda.gov/scripts/cdrh/cfdocs/cfStandards/search.cfm

[4] The summary report should include: any adaptations used to adapt to the device under review (for example, alternative test methods); choices made when options or a selection of methods are described; deviations from the standard; requirements not applicable to the device; and the name and address of the test laboratory or certification body involved in conformance assessment to this standard. The summary report includes information on all standards utilized during the development of the device.

[5] The supplemental information sheet (SIS) is additional information which is necessary before FDA recognizes the standard. Found at http://www.accessdata.fda.gov/scripts/cdrh/cfdocs/cfStandards/search.cfm

[6] The online search for CDRH Guidance Documents can be found at www.fda.gov/cdrh/guidance.html

PSC Graphics (301) 443-3090 EF

Questions? Contact FDA/CDRH/OCE/DID at CDRH-FOISTATUS@fda.hhs.gov or 301-796-8118

Records processed under FOIA Request 2011-7654; Released 1/22/13

EXTENT OF STANDARD CONFORMANCE SUMMARY REPORT TABLE

STANDARD TITLE

[redacted]

CONFORMANCE WITH STANDARD SECTIONS*

SECTION NUMBER	SECTION TITLE	CONFORMANCE?
3.1	Reprocessing instructions	☑ Yes ☐ No ☐ N/A

TYPE OF DEVIATION OR OPTION SELECTED *

[redacted]

DESCRIPTION

T[redacted]

JUSTIFICATION

The details of process steps, equipment and process parameters are specified in the validated cleaning and sterilization methods.

SECTION NUMBER	SECTION TITLE	CONFORMANCE?
		☐ Yes ☐ No ☐ N/A

TYPE OF DEVIATION OR OPTION SELECTED *

DESCRIPTION

JUSTIFICATION

SECTION NUMBER	SECTION TITLE	CONFORMANCE?
		☐ Yes ☐ No ☐ N/A

TYPE OF DEVIATION OR OPTION SELECTED *

DESCRIPTION

JUSTIFICATION

* For completeness list all sections of the standard and indicate whether conformance is met. If a section is not applicable (N/A) an explanation is needed under "justification." Some standards include options, so similar to deviations, the option chosen needs to be described and adequately justified as appropriate for the subject device. Explanation of all deviations or description of options selected when following a standard is required under "type of deviation or option selected," "description" and "justification" on the report. More than one page may be necessary.

* Types of deviations can include an exclusion of a section in the standard, a deviation brought out by the FDA supplemental information sheet (SIS), a deviation to adapt the standard to the device, or any adaptation of a section.

Paperwork Reduction Act Statement

Public reporting burden for this collection of information is estimated to average 1 hour per response, including the time for reviewing instructions, searching existing data sources, gathering and maintaining the data needed, and completing and reviewing the collection of information. Send comments regarding this burden estimate or any other aspect of this collection of information, including suggestions for reducing this burden, to:

Center for Devices and Radiological Health
1350 Piccard Drive
Rockville, MD 20850

An agency may not conduct or sponsor, and a person is not required to respond to, a collection of information unless it displays a currently valid OMB control number.

Questions? Contact FDA/CDRH/OCE/DID at CDRH-FOISTATUS@fda.hhs.gov or 301-796-8118

Records processed under FOIA Request 2011-7654; Released 1/22/13

Form Approved: OMB No. 0910-0120; Expiration Date: 8/31/10

Department of Health and Human Services
Food and Drug Administration

STANDARDS DATA REPORT FOR 510(k)s

(To be filled in by applicant)

This report and the Summary Report Table are to be completed by the applicant when submitting a 510(k) that references a national or international standard. A separate report is required for each standard referenced in the 510(k).

TYPE OF 510(K) SUBMISSION

☐ Traditional ☑ Special ☐ Abbreviated

STANDARD TITLE [1]

[redacted]

Please answer the following questions	*Yes*	*No*
Is this standard recognized by FDA [2]?	☐	☑
FDA Recognition number [3]	# N/A	
Was a third party laboratory responsible for testing conformity of the device to this standard identified in the 510(k)?	☑	☐
Is a summary report [4] describing the extent of conformance of the standard used included in the 510(k)? If no, complete a summary report table.	☐	☑
Does the test data for this device demonstrate conformity to the requirements of this standard as it pertains to this device?	☑	☐
Does this standard include acceptance criteria? If no, include the results of testing in the 510(k).	☑	☐
Does this standard include more than one option or selection of tests? If yes, report options selected in the summary report table.	☑	☐
Were there any deviations or adaptations made in the use of the standard?	☐	☑
If yes, were deviations in accordance with the FDA supplemental information sheet (SIS) [5]?	☐	☐
Were deviations or adaptations made beyond what is specified in the FDA SIS? If yes, report these deviations or adaptations in the summary report table.	☐	☑
Were there any exclusions from the standard? If yes, report these exclusions in the summary report table.	☐	☑
Is there an FDA guidance [6] that is associated with this standard?	☐	☑
If yes, was the guidance document followed in preparation of this 510k?	☐	☐

Title of guidance: _____

[1] The formatting convention for the title is: [SDO] [numeric identifier] [title of standard] [date of publication]

[2] Authority [21 U.S.C. 360d], www.fda.gov/cdrh/stdsprog.html

[3] http://www.accessdata.fda.gov/scripts/cdrh/cfdocs/cfStandards/search.cfm

[4] The summary report should include: any adaptations used to adapt to the device under review (for example, alternative test methods); choices made when options or a selection of methods are described; deviations from the standard; requirements not applicable to the device; and the name and address of the test laboratory or certification body involved in conformance assessment to this standard. The summary report includes information on all standards utilized during the development of the device.

[5] The supplemental information sheet (SIS) is additional information which is necessary before FDA recognizes the standard. Found at http://www.accessdata.fda.gov/scripts/cdrh/cfdocs/cfStandards/search.cfm

[6] The online search for CDRH Guidance Documents can be found at www.fda.gov/cdrh/guidance.html

Questions? Contact FDA/CDRH/OCE/DID at CDRH-FOISTATUS@fda.hhs.gov or 301-796-8118

Records processed under FOIA Request 2011-7654; Released 1/22/13

EXTENT OF STANDARD CONFORMANCE SUMMARY REPORT TABLE

STANDARD TITLE

[redacted]

CONFORMANCE WITH STANDARD SECTIONS*

SECTION NUMBER	SECTION TITLE	CONFORMANCE?
8	Procedure	☑ Yes ☐ No ☐ N/A

TYPE OF DEVIATION OR OPTION SELECTED*

Inoculation of device

DESCRIPTION

The sites that are the most difficult to sterilize in the device were identified and inoculated.

JUSTIFICATION

Inoculation sites were documented in the sterilization validation report.

SECTION NUMBER	SECTION TITLE	CONFORMANCE?
		☐ Yes ☐ No ☐ N/A

TYPE OF DEVIATION OR OPTION SELECTED*

DESCRIPTION

JUSTIFICATION

SECTION NUMBER	SECTION TITLE	CONFORMANCE?
		☐ Yes ☐ No ☐ N/A

TYPE OF DEVIATION OR OPTION SELECTED*

DESCRIPTION

JUSTIFICATION

* For completeness list all sections of the standard and indicate whether conformance is met. If a section is not applicable (N/A) an explanation is needed under "justification." Some standards include options, so similar to deviations, the option chosen needs to be described and adequately justified as appropriate for the subject device. Explanation of all deviations or description of options selected when following a standard is required under "type of deviation or option selected," "description" and "justification" on the report. More than one page may be necessary.

* Types of deviations can include an exclusion of a section in the standard, a deviation brought out by the FDA supplemental information sheet (SIS), a deviation to adapt the standard to the device, or any adaptation of a section.

Paperwork Reduction Act Statement

Public reporting burden for this collection of information is estimated to average 1 hour per response, including the time for reviewing instructions, searching existing data sources, gathering and maintaining the data needed, and completing and reviewing the collection of information. Send comments regarding this burden estimate or any other aspect of this collection of information, including suggestions for reducing this burden, to:

Center for Devices and Radiological Health
1350 Piccard Drive
Rockville, MD 20850

An agency may not conduct or sponsor, and a person is not required to respond to, a collection of information unless it displays a currently valid OMB control number.

Questions? Contact FDA/CDRH/OCE/DID at CDRH-FOISTATUS@fda.hhs.gov or 301-796-8118

Records processed under FOIA Request 2011-7654; Released 1/22/13

Form Approved: OMB No. 0910-0120; Expiration Date: 8/31/10

Department of Health and Human Services
Food and Drug Administration

STANDARDS DATA REPORT FOR 510(k)s

(To be filled in by applicant)

This report and the Summary Report Table are to be completed by the applicant when submitting a 510(k) that references a national or international standard. A separate report is required for each standard referenced in the 510(k).

TYPE OF 510(K) SUBMISSION

☐ Traditional ☑ Special ☐ Abbreviated

STANDARD TITLE [1]

[redacted]

Please answer the following questions	*Yes*	*No*
Is this standard recognized by FDA [2] ?	☑	☐
FDA Recognition number [3]	# 14-261	
Was a third party laboratory responsible for testing conformity of the device to this standard identified in the 510(k)?	☑	☐
Is a summary report [4] describing the extent of conformance of the standard used included in the 510(k)? If no, complete a summary report table.	☐	☑
Does the test data for this device demonstrate conformity to the requirements of this standard as it pertains to this device?	☑	☐
Does this standard include acceptance criteria? If no, include the results of testing in the 510(k).	☑	☐
Does this standard include more than one option or selection of tests? If yes, report options selected in the summary report table.	☑	☐
Were there any deviations or adaptations made in the use of the standard?	☐	☑
If yes, were deviations in accordance with the FDA supplemental information sheet (SIS) [5] ?	☐	☐
Were deviations or adaptations made beyond what is specified in the FDA SIS? If yes, report these deviations or adaptations in the summary report table.	☐	☑
Were there any exclusions from the standard? If yes, report these exclusions in the summary report table.	☐	☑
Is there an FDA guidance [6] that is associated with this standard?	☐	☑
If yes, was the guidance document followed in preparation of this 510k?	☐	☐

Title of guidance: _____

[1] The formatting convention for the title is: [SDO] [numeric identifier] [title of standard] [date of publication]

[2] Authority [21 U.S.C. 360d], www.fda.gov/cdrh/stdsprog.html

[3] http://www.accessdata.fda.gov/scripts/cdrh/cfdocs/cfStandards/search.cfm

[4] The summary report should include: any adaptations used to adapt to the device under review (for example, alternative test methods); choices made when options or a selection of methods are described; deviations from the standard; requirements not applicable to the device; and the name and address of the test laboratory or certification body involved in conformance assessment to this standard. The summary report includes information on all standards utilized during the development of the device.

[5] The supplemental information sheet (SIS) is additional information which is necessary before FDA recognizes the standard. Found at http://www.accessdata.fda.gov/scripts/cdrh/cfdocs/cfStandards/search.cfm

[6] The online search for CDRH Guidance Documents can be found at www.fda.gov/cdrh/guidance.html

Questions? Contact FDA/CDRH/OCE/DID at CDRH-FOISTATUS@fda.hhs.gov or 301-796-8118

Records processed under FOIA Request 2011-7654; Released 1/22/13

EXTENT OF STANDARD CONFORMANCE SUMMARY REPORT TABLE

STANDARD TITLE

ISO 17665-1:2006, Sterilization of health care products - Moist heat - Part 1: Requirements for the development, validation

CONFORMANCE WITH STANDARD SECTIONS*

SECTION NUMBER	SECTION TITLE	CONFORMANCE?
9	Validation	☑ Yes ☐ No ☐ N/A

TYPE OF DEVIATION OR OPTION SELECTED *

General

DESCRIPTION

[redacted]

JUSTIFICATION

[redacted]

SECTION NUMBER	SECTION TITLE	CONFORMANCE?
		☐ Yes ☐ No ☐ N/A

TYPE OF DEVIATION OR OPTION SELECTED *

DESCRIPTION

JUSTIFICATION

SECTION NUMBER	SECTION TITLE	CONFORMANCE?
		☐ Yes ☐ No ☐ N/A

TYPE OF DEVIATION OR OPTION SELECTED *

DESCRIPTION

JUSTIFICATION

* For completeness list all sections of the standard and indicate whether conformance is met. If a section is not applicable (N/A) an explanation is needed under "justification." Some standards include options, so similar to deviations, the option chosen needs to be described and adequately justified as appropriate for the subject device. Explanation of all deviations or description of options selected when following a standard is required under "type of deviation or option selected," "description" and "justification" on the report. More than one page may be necessary.

* Types of deviations can include an exclusion of a section in the standard, a deviation brought out by the FDA supplemental information sheet (SIS), a deviation to adapt the standard to the device, or any adaptation of a section.

Paperwork Reduction Act Statement

Public reporting burden for this collection of information is estimated to average 1 hour per response, including the time for reviewing instructions, searching existing data sources, gathering and maintaining the data needed, and completing and reviewing the collection of information. Send comments regarding this burden estimate or any other aspect of this collection of information, including suggestions for reducing this burden, to:

Center for Devices and Radiological Health
1350 Piccard Drive
Rockville, MD 20850

An agency may not conduct or sponsor, and a person is not required to respond to, a collection of information unless it displays a currently valid OMB control number.

Questions? Contact FDA/CDRH/OCE/DID at CDRH-FOISTATUS@fda.hhs.gov or 301-796-8118

Records processed under FOIA Request 2011-7654; Released 1/22/13

Form Approved: OMB No. 0910-0120; Expiration Date: 8/31/10

Department of Health and Human Services
Food and Drug Administration

STANDARDS DATA REPORT FOR 510(k)s

(To be filled in by applicant)

This report and the Summary Report Table are to be completed by the applicant when submitting a 510(k) that references a national or international standard. A separate report is required for each standard referenced in the 510(k).

TYPE OF 510(K) SUBMISSION

☐ Traditional ☑ Special ☐ Abbreviated

STANDARD TITLE [1]

[redacted]

Please answer the following questions	*Yes*	*No*
Is this standard recognized by FDA [2]?	☐	☑
FDA Recognition number [3] # N/A		
Was a third party laboratory responsible for testing conformity of the device to this standard identified in the 510(k)?	☑	☐
Is a summary report [4] describing the extent of conformance of the standard used included in the 510(k)? If no, complete a summary report table.	☐	☑
Does the test data for this device demonstrate conformity to the requirements of this standard as it pertains to this device?	☑	☐
Does this standard include acceptance criteria? If no, include the results of testing in the 510(k).	☑	☐
Does this standard include more than one option or selection of tests? If yes, report options selected in the summary report table.	☑	☐
Were there any deviations or adaptations made in the use of the standard?	☐	☑
If yes, were deviations in accordance with the FDA supplemental information sheet (SIS) [5]?	☐	☐
Were deviations or adaptations made beyond what is specified in the FDA SIS? If yes, report these deviations or adaptations in the summary report table.	☐	☑
Were there any exclusions from the standard? If yes, report these exclusions in the summary report table.	☐	☑
Is there an FDA guidance [6] that is associated with this standard?	☐	☑
If yes, was the guidance document followed in preparation of this 510k?	☐	☐

Title of guidance: _____

[1] The formatting convention for the title is: [SDO] [numeric identifier] [title of standard] [date of publication]

[2] Authority [21 U.S.C. 360d], www.fda.gov/cdrh/stdsprog.html

[3] http://www.accessdata.fda.gov/scripts/cdrh/cfdocs/cfStandards/search.cfm

[4] The summary report should include: any adaptations used to adapt to the device under review (for example, alternative test methods); choices made when options or a selection of methods are described; deviations from the standard; requirements not applicable to the device; and the name and address of the test laboratory or certification body involved in conformance assessment to this standard. The summary report includes information on all standards utilized during the development of the device.

[5] The supplemental information sheet (SIS) is additional information which is necessary before FDA recognizes the standard. Found at http://www.accessdata.fda.gov/scripts/cdrh/cfdocs/cfStandards/search.cfm

[6] The online search for CDRH Guidance Documents can be found at www.fda.gov/cdrh/guidance.html

PSC Graphics (301) 443-1090 EF

Questions? Contact FDA/CDRH/OCE/DID at CDRH-FOISTATUS@fda.hhs.gov or 301-796-8118

Records processed under FOIA Request 2011-7654; Released 1/22/13

EXTENT OF STANDARD CONFORMANCE
SUMMARY REPORT TABLE

STANDARD TITLE

[redacted]

CONFORMANCE WITH STANDARD SECTIONS*

SECTION NUMBER	SECTION TITLE	CONFORMANCE?
3.1	[redacted]	☑ Yes ☐ No ☐ N/A

TYPE OF DEVIATION OR OPTION SELECTED*

[redacted]

DESCRIPTION

[redacted]

JUSTIFICATION

[redacted]

SECTION NUMBER	SECTION TITLE	CONFORMANCE?
		☐ Yes ☐ No ☐ N/A

TYPE OF DEVIATION OR OPTION SELECTED*

DESCRIPTION

JUSTIFICATION

SECTION NUMBER	SECTION TITLE	CONFORMANCE?
		☐ Yes ☐ No ☐ N/A

TYPE OF DEVIATION OR OPTION SELECTED*

DESCRIPTION

JUSTIFICATION

* For completeness list all sections of the standard and indicate whether conformance is met. If a section is not applicable (N/A) an explanation is needed under "justification." Some standards include options, so similar to deviations, the option chosen needs to be described and adequately justified as appropriate for the subject device. Explanation of all deviations or description of options selected when following a standard is required under "type of deviation or option selected," "description" and "justification" on the report. More than one page may be necessary.

* Types of deviations can include an exclusion of a section in the standard, a deviation brought out by the FDA supplemental information sheet (SIS), a deviation to adapt the standard to the device, or any adaptation of a section.

Paperwork Reduction Act Statement

Public reporting burden for this collection of information is estimated to average 1 hour per response, including the time for reviewing instructions, searching existing data sources, gathering and maintaining the data needed, and completing and reviewing the collection of information. Send comments regarding this burden estimate or any other aspect of this collection of information, including suggestions for reducing this burden, to:

Center for Devices and Radiological Health
1350 Piccard Drive
Rockville, MD 20850

An agency may not conduct or sponsor, and a person is not required to respond to, a collection of information unless it displays a currently valid OMB control number.

Questions? Contact FDA/CDRH/OCE/DID at CDRH-FOISTATUS@fda.hhs.gov or 301-796-8118

Records processed under FOIA Request 2011-7654; Released 1/22/13

Form Approved: OMB No. 0910-0120; Expiration Date: 8/31/10

Department of Health and Human Services
Food and Drug Administration

STANDARDS DATA REPORT FOR 510(k)s

(To be filled in by applicant)

This report and the Summary Report Table are to be completed by the applicant when submitting a 510(k) that references a national or international standard. A separate report is required for each standard referenced in the 510(k).

TYPE OF 510(K) SUBMISSION

☐ Traditional ☑ Special ☐ Abbreviated

STANDARD TITLE [1]

[redacted]

Please answer the following questions	*Yes*	*No*
Is this standard recognized by FDA [2]?	☑	☐
FDA Recognition number [3]	# 14-280	
Was a third party laboratory responsible for testing conformity of the device to this standard identified in the 510(k)?	☑	☐
Is a summary report [4] describing the extent of conformance of the standard used included in the 510(k)? If no, complete a summary report table.	☐	☑
Does the test data for this device demonstrate conformity to the requirements of this standard as it pertains to this device?	☑	☐
Does this standard include acceptance criteria? If no, include the results of testing in the 510(k).	☑	☐
Does this standard include more than one option or selection of tests? If yes, report options selected in the summary report table.	☑	☐
Were there any deviations or adaptations made in the use of the standard?	☐	☑
If yes, were deviations in accordance with the FDA supplemental information sheet (SIS) [5]?	☐	☐
Were deviations or adaptations made beyond what is specified in the FDA SIS? If yes, report these deviations or adaptations in the summary report table.	☐	☑
Were there any exclusions from the standard? If yes, report these exclusions in the summary report table.	☐	☑
Is there an FDA guidance [6] that is associated with this standard?	☐	☑
If yes, was the guidance document followed in preparation of this 510k?	☐	☐

Title of guidance: _____

[1] The formatting convention for the title is: [SDO] [numeric identifier] [title of standard] [date of publication]

[2] Authority [21 U.S.C. 360d], www.fda.gov/cdrh/stdsprog.html

[3] http://www.accessdata.fda.gov/scripts/cdrh/cfdocs/cfStandards/search.cfm

[4] The summary report should include: any adaptations used to adapt to the device under review (for example, alternative test methods); choices made when options or a selection of methods are described; deviations from the standard; requirements not applicable to the device; and the name and address of the test laboratory or certification body involved in conformance assessment to this standard. The summary report includes information on all standards utilized during the development of the device.

[5] The supplemental information sheet (SIS) is additional information which is necessary before FDA recognizes the standard. Found at http://www.accessdata.fda.gov/scripts/cdrh/cfdocs/cfStandards/search.cfm

[6] The online search for CDRH Guidance Documents can be found at www.fda.gov/cdrh/guidance.html

PSC Graphics (301) 443-1690 EF

Questions? Contact FDA/CDRH/OCE/DID at CDRH-FOISTATUS@fda.hhs.gov or 301-796-8118

Records processed under FOIA Request 2011-7654; Released 1/22/13

EXTENT OF STANDARD CONFORMANCE
SUMMARY REPORT TABLE

STANDARD TITLE

[redacted]

CONFORMANCE WITH STANDARD SECTIONS*

SECTION NUMBER	SECTION TITLE	CONFORMANCE?
E.2	Categories of items to be disinfected	☑ Yes ☐ No ☐ N/A

TYPE OF DEVIATION OR OPTION SELECTED*

[redacted]

DESCRIPTION

[redacted]

JUSTIFICATION

[redacted]

SECTION NUMBER	SECTION TITLE	CONFORMANCE?
		☐ Yes ☐ No ☐ N/A

TYPE OF DEVIATION OR OPTION SELECTED*

DESCRIPTION

JUSTIFICATION

SECTION NUMBER	SECTION TITLE	CONFORMANCE?
		☐ Yes ☐ No ☐ N/A

TYPE OF DEVIATION OR OPTION SELECTED*

DESCRIPTION

JUSTIFICATION

* For completeness list all sections of the standard and indicate whether conformance is met. If a section is not applicable (N/A) an explanation is needed under "justification." Some standards include options, so similar to deviations, the option chosen needs to be described and adequately justified as appropriate for the subject device. Explanation of all deviations or description of options selected when following a standard is required under "type of deviation or option selected," "description" and "justification" on the report. More than one page may be necessary.

* Types of deviations can include an exclusion of a section in the standard, a deviation brought out by the FDA supplemental information sheet (SIS), a deviation to adapt the standard to the device, or any adaptation of a section.

Paperwork Reduction Act Statement

Public reporting burden for this collection of information is estimated to average 1 hour per response, including the time for reviewing instructions, searching existing data sources, gathering and maintaining the data needed, and completing and reviewing the collection of information. Send comments regarding this burden estimate or any other aspect of this collection of information, including suggestions for reducing this burden, to:

Center for Devices and Radiological Health
1350 Piccard Drive
Rockville, MD 20850

An agency may not conduct or sponsor, and a person is not required to respond to, a collection of information unless it displays a currently valid OMB control number.

Questions? Contact FDA/CDRH/OCE/DID at CDRH-FOISTATUS@fda.hhs.gov or 301-796-8118

Records processed under FOIA Request 2011-7654; Released 1/22/13

Form Approved: OMB No. 0910-0120; Expiration Date: 8/31/10

Department of Health and Human Services
Food and Drug Administration

STANDARDS DATA REPORT FOR 510(k)s

(To be filled in by applicant)

This report and the Summary Report Table are to be completed by the applicant when submitting a 510(k) that references a national or international standard. A separate report is required for each standard referenced in the 510(k).

TYPE OF 510(K) SUBMISSION

☐ Traditional ☑ Special ☐ Abbreviated

STANDARD TITLE [1]

[redacted]

Please answer the following questions	*Yes*	*No*
Is this standard recognized by FDA [2]?	☐	☑
FDA Recognition number [3] # N/A		
Was a third party laboratory responsible for testing conformity of the device to this standard identified in the 510(k)?	☑	☐
Is a summary report [4] describing the extent of conformance of the standard used included in the 510(k)? If no, complete a summary report table.	☑	☐
Does the test data for this device demonstrate conformity to the requirements of this standard as it pertains to this device?	☑	☐
Does this standard include acceptance criteria? If no, include the results of testing in the 510(k).	☑	☐
Does this standard include more than one option or selection of tests? If yes, report options selected in the summary report table.	☑	☐
Were there any deviations or adaptations made in the use of the standard?	☐	☑
If yes, were deviations in accordance with the FDA supplemental information sheet (SIS) [5]?	☐	☐
Were deviations or adaptations made beyond what is specified in the FDA SIS? If yes, report these deviations or adaptations in the summary report table.	☐	☑
Were there any exclusions from the standard? If yes, report these exclusions in the summary report table.	☐	☑
Is there an FDA guidance [6] that is associated with this standard?	☐	☑
If yes, was the guidance document followed in preparation of this 510k?	☐	☐

Title of guidance: _____

[1] The formatting convention for the title is: [SDO] [numeric identifier] [title of standard] [date of publication]

[2] Authority [21 U.S.C. 360d], www.fda.gov/cdrh/stdsprog.html

[3] http://www.accessdata.fda.gov/scripts/cdrh/cfdocs/cfStandards/search.cfm

[4] The summary report should include: any adaptations used to adapt to the device under review (for example, alternative test methods); choices made when options or a selection of methods are described; deviations from the standard; requirements not applicable to the device; and the name and address of the test laboratory or certification body involved in conformance assessment to this standard. The summary report includes information on all standards utilized during the development of the device.

[5] The supplemental information sheet (SIS) is additional information which is necessary before FDA recognizes the standard. Found at http://www.accessdata.fda.gov/scripts/cdrh/cfdocs/cfStandards/search.cfm

[6] The online search for CDRH Guidance Documents can be found at www.fda.gov/cdrh/guidance.html

PSC Graphics (301) 443-1090 DF

Questions? Contact FDA/CDRH/OCE/DID at CDRH-FOISTATUS@fda.hhs.gov or 301-796-8118

Records processed under FOIA Request 2011-7654; Released 1/22/13

EXTENT OF STANDARD CONFORMANCE SUMMARY REPORT TABLE

STANDARD TITLE

[redacted]

CONFORMANCE WITH STANDARD SECTIONS*

SECTION NUMBER	SECTION TITLE	CONFORMANCE?
5.4.2	Markers	☑ Yes ☐ No ☐ N/A

TYPE OF DEVIATION OR OPTION SELECTED*

[redacted]

DESCRIPTION

Acceptance criteria for cleaning validation

JUSTIFICATION

[redacted]

SECTION NUMBER	SECTION TITLE	CONFORMANCE?
		☐ Yes ☐ No ☐ N/A

TYPE OF DEVIATION OR OPTION SELECTED*

DESCRIPTION

JUSTIFICATION

SECTION NUMBER	SECTION TITLE	CONFORMANCE?
		☐ Yes ☐ No ☐ N/A

TYPE OF DEVIATION OR OPTION SELECTED*

DESCRIPTION

JUSTIFICATION

* For completeness list all sections of the standard and indicate whether conformance is met. If a section is not applicable (N/A) an explanation is needed under "justification." Some standards include options, so similar to deviations, the option chosen needs to be described and adequately justified as appropriate for the subject device. Explanation of all deviations or description of options selected when following a standard is required under "type of deviation or option selected," "description" and "justification" on the report. More than one page may be necessary.

* Types of deviations can include an exclusion of a section in the standard, a deviation brought out by the FDA supplemental information sheet (SIS), a deviation to adapt the standard to the device, or any adaptation of a section.

Paperwork Reduction Act Statement

Public reporting burden for this collection of information is estimated to average 1 hour per response, including the time for reviewing instructions, searching existing data sources, gathering and maintaining the data needed, and completing and reviewing the collection of information. Send comments regarding this burden estimate or any other aspect of this collection of information, including suggestions for reducing this burden, to:

Center for Devices and Radiological Health
1350 Piccard Drive
Rockville, MD 20850

An agency may not conduct or sponsor, and a person is not required to respond to, a collection of information unless it displays a currently valid OMB control number.

Questions? Contact FDA/CDRH/OCE/DID at CDRH-FOISTATUS@fda.hhs.gov or 301-796-8118

Records processed under FOIA Request 2011-7654; Released 1/22/13

Form Approved: OMB No. 0910-0120; Expiration Date: 8/31/10

Department of Health and Human Services
Food and Drug Administration

STANDARDS DATA REPORT FOR 510(k)s

(To be filled in by applicant)

This report and the Summary Report Table are to be completed by the applicant when submitting a 510(k) that references a national or international standard. A separate report is required for each standard referenced in the 510(k).

TYPE OF 510(K) SUBMISSION

☐ Traditional ☑ Special ☐ Abbreviated

STANDARD TITLE [1]

[redacted]

Please answer the following questions	*Yes*	*No*
Is this standard recognized by FDA [2]?	☑	☐
FDA Recognition number [3] # 2-156		
Was a third party laboratory responsible for testing conformity of the device to this standard identified in the 510(k)?	☑	☐
Is a summary report [4] describing the extent of conformance of the standard used included in the 510(k)? If no, complete a summary report table.	☑	☐
Does the test data for this device demonstrate conformity to the requirements of this standard as it pertains to this device?	☑	☐
Does this standard include acceptance criteria? If no, include the results of testing in the 510(k).	☐	☑
Does this standard include more than one option or selection of tests? If yes, report options selected in the summary report table.	☑	☐
Were there any deviations or adaptations made in the use of the standard?	☐	☑
If yes, were deviations in accordance with the FDA supplemental information sheet (SIS) [5]?	☐	☐
Were deviations or adaptations made beyond what is specified in the FDA SIS? If yes, report these deviations or adaptations in the summary report table.	☐	☑
Were there any exclusions from the standard? If yes, report these exclusions in the summary report table.	☐	☑
Is there an FDA guidance [6] that is associated with this standard?	☑	☐
If yes, was the guidance document followed in preparation of this 510k?	☐	☐

Title of guidance: [redacted]

[1] The formatting convention for the title is: [SDO] [numeric identifier] [title of standard] [date of publication]

[2] Authority [21 U.S.C. 360d], www.fda.gov/cdrh/stdsprog.html

[3] http://www.accessdata.fda.gov/scripts/cdrh/cfdocs/cfStandards/search.cfm

[4] The summary report should include: any adaptations used to adapt to the device under review (for example, alternative test methods); choices made when options or a selection of methods are described; deviations from the standard; requirements not applicable to the device; and the name and address of the test laboratory or certification body involved in conformance assessment to this standard. The summary report includes information on all standards utilized during the development of the device.

[5] The supplemental information sheet (SIS) is additional information which is necessary before FDA recognizes the standard. Found at http://www.accessdata.fda.gov/scripts/cdrh/cfdocs/cfStandards/search.cfm

[6] The online search for CDRH Guidance Documents can be found at www.fda.gov/cdrh/guidance.html

PSC Graphics (301) 443-1090 EF

Questions? Contact FDA/CDRH/OCE/DID at CDRH-FOISTATUS@fda.hhs.gov or 301-796-8118

Records processed under FOIA Request 2011-7654; Released 1/22/13

EXTENT OF STANDARD CONFORMANCE SUMMARY REPORT TABLE

STANDARD TITLE

[redacted]

CONFORMANCE WITH STANDARD SECTIONS*

SECTION NUMBER	SECTION TITLE	CONFORMANCE?
6.2	[redacted]	☑ Yes ☐ No ☐ N/A

TYPE OF DEVIATION OR OPTION SELECTED*

[redacted]

DESCRIPTION

[redacted]

JUSTIFICATION

[redacted]

SECTION NUMBER	SECTION TITLE	CONFORMANCE?
6.2	Biological evaluation tests	☑ Yes ☐ No ☐ N/A

TYPE OF DEVIATION OR OPTION SELECTED*

[redacted]

DESCRIPTION

[redacted]

JUSTIFICATION

[redacted]

SECTION NUMBER	SECTION TITLE	CONFORMANCE?
		☐ Yes ☐ No ☐ N/A

TYPE OF DEVIATION OR OPTION SELECTED*

DESCRIPTION

JUSTIFICATION

* For completeness list all sections of the standard and indicate whether conformance is met. If a section is not applicable (N/A) an explanation is needed under "justification." Some standards include options, so similar to deviations, the option chosen needs to be described and adequately justified as appropriate for the subject device. Explanation of all deviations or description of options selected when following a standard is required under "type of deviation or option selected," "description" and "justification" on the report. More than one page may be necessary.

* Types of deviations can include an exclusion of a section in the standard, a deviation brought out by the FDA supplemental information sheet (SIS), a deviation to adapt the standard to the device, or any adaptation of a section.

Paperwork Reduction Act Statement

Public reporting burden for this collection of information is estimated to average 1 hour per response, including the time for reviewing instructions, searching existing data sources, gathering and maintaining the data needed, and completing and reviewing the collection of information. Send comments regarding this burden estimate or any other aspect of this collection of information, including suggestions for reducing this burden, to:

Center for Devices and Radiological Health
1350 Piccard Drive
Rockville, MD 20850

An agency may not conduct or sponsor, and a person is not required to respond to, a collection of information unless it displays a currently valid OMB control number.

Questions? Contact FDA/CDRH/OCE/DID at CDRH-FOISTATUS@fda.hhs.gov or 301-796-8118

Records processed under FOIA Request 2011-7654; Released 1/22/13

Form Approved: OMB No. 0910-0120; Expiration Date: 8/31/10

Department of Health and Human Services
Food and Drug Administration

STANDARDS DATA REPORT FOR 510(k)s

(To be filled in by applicant)

This report and the Summary Report Table are to be completed by the applicant when submitting a 510(k) that references a national or international standard. A separate report is required for each standard referenced in the 510(k).

TYPE OF 510(K) SUBMISSION

☐ Traditional ☑ Special ☐ Abbreviated

STANDARD TITLE [1]

[redacted]

Please answer the following questions	*Yes*	*No*
Is this standard recognized by FDA [2] ?	☐	☑
FDA Recognition number [3]	# N/A	
Was a third party laboratory responsible for testing conformity of the device to this standard identified in the 510(k)?	☑	☐
Is a summary report [4] describing the extent of conformance of the standard used included in the 510(k)? If no, complete a summary report table.	☐	☑
Does the test data for this device demonstrate conformity to the requirements of this standard as it pertains to this device?	☑	☐
Does this standard include acceptance criteria? If no, include the results of testing in the 510(k).	☑	☐
Does this standard include more than one option or selection of tests? If yes, report options selected in the summary report table.	☑	☐
Were there any deviations or adaptations made in the use of the standard?	☐	☑
If yes, were deviations in accordance with the FDA supplemental information sheet (SIS) [5] ?	☐	☐
Were deviations or adaptations made beyond what is specified in the FDA SIS? If yes, report these deviations or adaptations in the summary report table.	☐	☑
Were there any exclusions from the standard? If yes, report these exclusions in the summary report table.	☐	☑
Is there an FDA guidance [6] that is associated with this standard?	☑	☐
If yes, was the guidance document followed in preparation of this 510k?	☑	☐

Title of guidance [redacted]

[1] The formatting convention for the title is: [SDO] [numeric identifier] [title of standard] [date of publication]

[2] Authority [21 U.S.C. 360d], www.fda.gov/cdrh/stdsprog.html

[3] http://www.accessdata.fda.gov/scripts/cdrh/cfdocs/cfStandards/search.cfm

[4] The summary report should include: any adaptations used to adapt to the device under review (for example, alternative test methods); choices made when options or a selection of methods are described; deviations from the standard; requirements not applicable to the device; and the name and address of the test laboratory or certification body involved in conformance assessment to this standard. The summary report includes information on all standards utilized during the development of the device.

[5] The supplemental information sheet (SIS) is additional information which is necessary before FDA recognizes the standard. Found at http://www.accessdata.fda.gov/scripts/cdrh/cfdocs/cfStandards/search.cfm

[6] The online search for CDRH Guidance Documents can be found at www.fda.gov/cdrh/guidance.html

PSC Graphics (301) 443-1090 EF

Questions? Contact FDA/CDRH/OCE/DID at CDRH-FOISTATUS@fda.hhs.gov or 301-796-8118

Records processed under FOIA Request 2011-7654; Released 1/22/13

EXTENT OF STANDARD CONFORMANCE SUMMARY REPORT TABLE

STANDARD TITLE

[redacted]

CONFORMANCE WITH STANDARD SECTIONS*

SECTION NUMBER	SECTION TITLE	CONFORMANCE?
3.2	[redacted]	☑ Yes ☐ No ☐ N/A

TYPE OF DEVIATION OR OPTION SELECTED*

[redacted]

DESCRIPTION

[redacted]

JUSTIFICATION

[redacted]

SECTION NUMBER	SECTION TITLE	CONFORMANCE?
3.2	Categories of medical devices	☑ Yes ☐ No ☐ N/A

TYPE OF DEVIATION OR OPTION SELECTED*

[redacted]

DESCRIPTION

[redacted]

JUSTIFICATION

[redacted]

SECTION NUMBER	SECTION TITLE	CONFORMANCE?
		☐ Yes ☐ No ☐ N/A

TYPE OF DEVIATION OR OPTION SELECTED*

DESCRIPTION

JUSTIFICATION

* For completeness list all sections of the standard and indicate whether conformance is met. If a section is not applicable (N/A) an explanation is needed under "justification." Some standards include options, so similar to deviations, the option chosen needs to be described and adequately justified as appropriate for the subject device. Explanation of all deviations or description of options selected when following a standard is required under "type of deviation or option selected," "description" and "justification" on the report. More than one page may be necessary.

* Types of deviations can include an exclusion of a section in the standard, a deviation brought out by the FDA supplemental information sheet (SIS), a deviation to adapt the standard to the device, or any adaptation of a section.

Paperwork Reduction Act Statement

Public reporting burden for this collection of information is estimated to average 1 hour per response, including the time for reviewing instructions, searching existing data sources, gathering and maintaining the data needed, and completing and reviewing the collection of information. Send comments regarding this burden estimate or any other aspect of this collection of information, including suggestions for reducing this burden, to:

Center for Devices and Radiological Health
1350 Piccard Drive
Rockville, MD 20850

An agency may not conduct or sponsor, and a person is not required to respond to, a collection of information unless it displays a currently valid OMB control number.

Questions? Contact FDA/CDRH/OCE/DID at CDRH-FOISTATUS@fda.hhs.gov or 301-796-8118

Records processed under FOIA Request 2011-7654; Released 1/22/13

Form Approved: OMB No. 0910-0120; Expiration Date: 8/31/10

Department of Health and Human Services
Food and Drug Administration

STANDARDS DATA REPORT FOR 510(k)s

(To be filled in by applicant)

This report and the Summary Report Table are to be completed by the applicant when submitting a 510(k) that references a national or international standard. A separate report is required for each standard referenced in the 510(k).

TYPE OF 510(K) SUBMISSION

☐ Traditional ☑ Special ☐ Abbreviated

STANDARD TITLE[1]

[redacted]

Please answer the following questions	*Yes*	*No*
Is this standard recognized by FDA[2]?	☑	☐
FDA Recognition number[3]	# 4-122, 9-42	
Was a third party laboratory responsible for testing conformity of the device to this standard identified in the 510(k)?	☑	☐
Is a summary report[4] describing the extent of conformance of the standard used included in the 510(k)? If no, complete a summary report table.	☐	☑
Does the test data for this device demonstrate conformity to the requirements of this standard as it pertains to this device?	☑	☐
Does this standard include acceptance criteria? If no, include the results of testing in the 510(k).	☑	☐
Does this standard include more than one option or selection of tests? If yes, report options selected in the summary report table.	☑	☐
Were there any deviations or adaptations made in the use of the standard?	☐	☑
If yes, were deviations in accordance with the FDA supplemental information sheet (SIS)[5]?	☐	☐
Were deviations or adaptations made beyond what is specified in the FDA SIS? If yes, report these deviations or adaptations in the summary report table.	☐	☑
Were there any exclusions from the standard? If yes, report these exclusions in the summary report table.	☐	☑
Is there an FDA guidance[6] that is associated with this standard?	☐	☑
If yes, was the guidance document followed in preparation of this 510k?	☐	☐

Title of guidance: _____

[1] The formatting convention for the title is: [SDO] [numeric identifier] [title of standard] [date of publication]

[2] Authority [21 U.S.C. 360d], www.fda.gov/cdrh/stdsprog.html

[3] http://www.accessdata.fda.gov/scripts/cdrh/cfdocs/cfStandards/search.cfm

[4] The summary report should include: any adaptations used to adapt to the device under review (for example, alternative test methods); choices made when options or a selection of methods are described; deviations from the standard; requirements not applicable to the device; and the name and address of the test laboratory or certification body involved in conformance assessment to this standard. The summary report includes information on all standards utilized during the development of the device.

[5] The supplemental information sheet (SIS) is additional information which is necessary before FDA recognizes the standard. Found at http://www.accessdata.fda.gov/scripts/cdrh/cfdocs/cfStandards/search.cfm

[6] The online search for CDRH Guidance Documents can be found at www.fda.gov/cdrh/guidance.html

Questions? Contact FDA/CDRH/OCE/DID at CDRH-FOISTATUS@fda.hhs.gov or 301-796-8118

Records processed under FOIA Request 2011-7654; Released 1/22/13

EXTENT OF STANDARD CONFORMANCE
SUMMARY REPORT TABLE

STANDARD TITLE

[redacted]

CONFORMANCE WITH STANDARD SECTIONS*

SECTION NUMBER	SECTION TITLE	CONFORMANCE?
3	General requirements	☑ Yes ☐ No ☐ N/A

TYPE OF DEVIATION OR OPTION SELECTED*

[redacted]

DESCRIPTION

[redacted]

[redacted]

SECTION NUMBER	SECTION TITLE	CONFORMANCE?
		☐ Yes ☐ No ☐ N/A

TYPE OF DEVIATION OR OPTION SELECTED*

DESCRIPTION

JUSTIFICATION

SECTION NUMBER	SECTION TITLE	CONFORMANCE?
		☐ Yes ☐ No ☐ N/A

TYPE OF DEVIATION OR OPTION SELECTED*

DESCRIPTION

JUSTIFICATION

* For completeness list all sections of the standard and indicate whether conformance is met. If a section is not applicable (N/A) an explanation is needed under "justification." Some standards include options, so similar to deviations, the option chosen needs to be described and adequately justified as appropriate for the subject device. Explanation of all deviations or description of options selected when following a standard is required under "type of deviation or option selected," "description" and "justification" on the report. More than one page may be necessary.

* Types of deviations can include an exclusion of a section in the standard, a deviation brought out by the FDA supplemental information sheet (SIS), a deviation to adapt the standard to the device, or any adaptation of a section.

Paperwork Reduction Act Statement

Public reporting burden for this collection of information is estimated to average 1 hour per response, including the time for reviewing instructions, searching existing data sources, gathering and maintaining the data needed, and completing and reviewing the collection of information. Send comments regarding this burden estimate or any other aspect of this collection of information, including suggestions for reducing this burden, to:

Center for Devices and Radiological Health
1350 Piccard Drive
Rockville, MD 20850

An agency may not conduct or sponsor, and a person is not required to respond to, a collection of information unless it displays a currently valid OMB control number.

Questions? Contact FDA/CDRH/OCE/DID at CDRH-FOISTATUS@fda.hhs.gov or 301-796-8118

Records processed under FOIA Request 2011-7654; Released 1/22/13

Food and Drug Administration
Office of Device Evaluation &
Office of In Vitro Diagnostics

COVER SHEET MEMORANDUM

From: Reviewer Name Susan Rudy MSN CRNP CORLN

Subject: 510(k) Number K110097 / S002

To: The Record

Please list CTS decision code SE

☐ Refused to accept (Note: this is considered the first review cycle, See Screening Checklist http://eroom.fda.gov/eRoomReq/Files/CDRH3/CDRHPremarketNotification510kProgram/0_5631/Screening%20Checklist%207%202%2007.doc)

☐ Hold (Additional Information or Telephone Hold).

☒ Final Decision (SE) SE with Limitations, NSE (select code below), Withdrawn, etc.).

Not Substantially Equivalent (NSE) Codes

☐	NO	NSE for lack of predicate
☐	NI	NSE for new intended use
☐	NQ	NSE for new technology that raises new questions of safety and effectiveness
☐	NP	NSE for lack of performance data
☐	NC	NSE call for PMAs
☐	NS	NSE no response
☐	NH	NSE for another reason

Please complete the following for a final clearance decision (i.e., SE, SE with Limitations, etc.):		YES	NO
Indications for Use Page	*Attach IFU*	✓	
510(k) Summary /510(k) Statement	*Attach Summary*	✓	
Truthful and Accurate Statement.	*Must be present for a Final Decision*	✓	
Is the device Class III? If yes, does firm include Class III Summary?	*Must be present for a Final Decision*		✓
Does firm reference standards? (If yes, please attach form from http://www.fda.gov/opacom/morechoices/fdaforms/FDA-3654.pdf)		✓	
Is this a combination product? (Please specify category _____, see http://eroom.fda.gov/eRoomReq/Files/CDRH3/CDRHPremarketNotification510kProgram/0_413b/COMBINATION%20PRODUCT%20ALGORITHM%20(REVISED%203-12-03).DOC			✓
Is this a reprocessed single use device? (Guidance for Industry and FDA Staff – MDUFMA - Validation Data in 510(k)s for Reprocessed Single-Use Medical Devices, http://www.fda.gov/cdrh/ode/guidance/1216.html)			✓
Is this device intended for pediatric use only?			✓
Is this a prescription device? (If both prescription & OTC, check both boxes.)		✓	
Did the application include a completed FORM FDA 3674, Certification with Requirements of ClinicalTrials.gov Data Bank?			✓
Is clinical data necessary to support the review of this 510(k)? Did the application include a completed FORM FDA 3674, *Certification with Requirements of ClinicalTrials.gov Data Bank*? (If not, then applicant must be contacted to obtain completed form.)			✓
Does this device include an Animal Tissue Source?			✓
All Pediatric Patients age<=21			

Rev. 5/12/11

Neonate/Newborn (Birth to 28 days)			
Infant (29 days -< 2 years old)			
Child (2 years -< 12 years old)			
Adolescent (12 years -< 18 years old)			
Transitional Adolescent A (18 - <21 years old) Special considerations are being given to this group, different from adults age ≥ 21 (different device design or testing, different protocol procedures, etc.)			
Transitional Adolescent B (18 -<= 21; No special considerations compared to adults => 21 years old)			
Nanotechnology			✓
Is this device subject to the Tracking Regulation? (Medical Device Tracking Guidance, http://www.fda.gov/cdrh/comp/guidance/169.html)	*Contact OC.*		✓

Regulation Number	Class*	Product Code
21 CFR 874.4760	II	EOB

(*If unclassified, see 510(k) Staff)

Additional Product Codes:

Review: ENTB 5/26/11
(Branch Chief) (Branch Code) (Date)

Final Review: 5/26/11
(Division Director) (Date)

Records processed under FOIA Request 2011-7654; Released 1/22/13

SPECIAL 510(k): Device Modification
ODE Review Memorandum (Decision Making Document is Attached)

To: THE FILE **RE:** DOCUMENT NUMBER K____110097 / S002_
Acclarent Cyclops Multi-Angle Endoscope Model CYE002

This 510(k) submission contains information/data on modifications made to the SUBMITTER'S own Class II, Class III or Class I devices requiring 510(k). The following items are present and acceptable (delete/add items as necessary):

1. The name and 510(k) number of the SUBMITTER'S previously cleared device. (For a preamendments device, a statement to this effect has been provided.)

2. Submitter's statement that the **INDICATION/INTENDED USE** of the modified device as described in its labeling **HAS NOT CHANGED** along with the proposed labeling which includes instructions for use, package labeling, and, if available, advertisements or promotional materials (labeling changes are permitted as long as they do not affect the intended use).

Indications for use is SE as of S001.

3. A description of the device **MODIFICATION(S),** including clearly labeled diagrams, engineering drawings, photographs, user's and/or service manuals in sufficient detail to demonstrate that the **FUNDAMENTAL SCIENTIFIC TECHNOLOGY** of the modified device **has not changed**.

   This change was for:

[redacted]

4. **Comparison Information** (similarities and differences) to applicant's legally marketed predicate device including, labeling, intended use, physical characteristics, See SE discussion below_____

5. A **Design Control Activities Summary** which includes:

[redacted]

Records processed under FOIA Request 2011-7654; Released 1/22/13

[redacted]

6. A **Truthful and Accurate Statement**, a **510(k) Summary or Statement** and the **Indications for Use Enclosure (and Class III Summary for Class III devices).**

7. The labeling for this modified subject device has been reviewed to verify that the indication/intended use for the device is unaffected by the modification. In addition, the submitter's description of the particular modification(s) and the comparative information between the modified and unmodified devices demonstrate that the fundamental scientific technology has not changed. The submitter has provided the design control information as specified in The New 510(k) Paradigm and on this basis, I recommend the device be determined substantially equivalent to the previously cleared (or their preamendment) device.

Susan Rudy CRNP (Reviewer's Signature) 5/26/2011 (Date)

revised:8/1/03

"SUBSTANTIAL EQUIVALENCE" (SE) DECISION MAKING DOCUMENTATION

	Yes	No	
1. Same Indication Statement?	X		If **YES** = Go To 3
2. Do Differences Alter The Effect Or Raise New Issues of Safety Or Effectiveness?			If **YES** = Stop **NSE**
3. Same Technological Characteristics?	X		If **YES** = Go To 5
4. Could The New Characteristics Affect Safety Or Effectiveness?			If **YES** = Go To 6
5. Descriptive Characteristics Precise Enough?	X		If **NO** = Go To 8 If **YES** = Stop **SE**
6. New Types Of Safety Or Effectiveness Questions?			If **YES** = Stop **NSE**
7. Accepted Scientific Methods Exist?			If **NO** = Stop **NSE**
8. Performance Data Available?			If **NO** = Request Data
9. Data Demonstrate Equivalence?	X		Final Decision: SE

Note: See http://eroom.fda.gov/eRoomReq/Files/CDRH3/CDRHPremarketNotification510kProgram/0_4148/FLOWCHART%20DECISION%20TREE%20.DOC for Flowchart to assist in decision-making process. Please complete the following

Questions? Contact FDA/CDRH/OCE/DID at CDRH-FOISTATUS@fda.hhs.gov or 301-796-8118

Records processed under FOIA Request 2011-7654; Released 1/22/13

table and answer the corresponding questions. "Yes" responses to questions 2, 4, 6, and 9, and every "no" response requires an explanation.

1. Explain how the new indication differs from the predicate device's indication: Same

2. Explain why there is or is not a new effect or safety or effectiveness issue: NA

3. Describe the new technological characteristics:

[redacted]

4. Explain how new characteristics could or could not affect safety or effectiveness:

[redacted]

5. Explain how descriptive characteristics are not precise enough: After interactions, they are.

6. Explain new types of safety or effectiveness question(s) raised or why the question(s) are not new: NA

7. Explain why existing scientific methods can not be used: NA

8. Explain what performance data is needed: All issues have been addressed.

9. Explain how the performance data demonstrates that the device is or is not substantially equivalent:

[redacted]

Records processed under FOIA Request 2011-7654; Released 1/22/13

Questions? Contact FDA/CDRH/OCE/DID at CDRH-FOISTATUS@fda.hhs.gov or 301-796-8118

Records processed under FOIA Request 2011-7654; Released 1/22/13

[redacted]

Questions? Contact FDA/CDRH/OCE/DID at CDRH-FOISTATUS@fda.hhs.gov or 301-796-8118

Records processed under FOIA Request 2011-7654; Released 1/22/13

Reviewer Summary of Acclarent Cyclops Thermal Safety Data [redacted]

The predicate temperature testing [redacted].

[redacted]

Questions? Contact FDA/CDRH/OCE/DID at CDRH-FOISTATUS@fda.hhs.gov or 301-796-8118

Records processed under FOIA Request 2011-7654; Released 1/22/13

K110097 Cyclops Gen 2 testing [redacted]

[redacted]

[redacted]

Questions? Contact FDA/CDRH/OCE/DID at CDRH-FOISTATUS@fda.hhs.gov or 301-796-8118

Records processed under FOIA Request 2011-7654; Released 1/22/13

K110097 / S001 Cyclops Gen 2 testing [redacted]

[redacted]

K110097 / S001 Cyclops Gen 2 testing [redacted]

[redacted]

Questions? Contact FDA/CDRH/OCE/DID at CDRH-FOISTATUS@fda.hhs.gov or 301-796-8118

Records processed under FOIA Request 2011-7654; Released 1/22/13

K110097 / S001 Cyclops Gen 2 testing [redacted]

[redacted]

K110097 / S001 Cyclops Gen 2 Acclarent test data [redacted]

[redacted]

Questions? Contact FDA/CDRH/OCE/DID at CDRH-FOISTATUS@fda.hhs.gov or 301-796-8118

Records processed under FOIA Request 2011-7654; Released 1/22/13

K110097 / S002 Cyclops Gen 2 Acclarent test data a[redacted]

[redacted]

Records processed under FOIA Request 2011-7654; Released 1/22/13

K110097 / S002 Cyclops Gen 2 Acclarent test data [redacted]

[redacted]

Questions? Contact FDA/CDRH/OCE/DID at CDRH-FOISTATUS@fda.hhs.gov or 301-796-8118

Records processed under FOIA Request 2011-7654; Released 1/22/13

K110097 / S002 Acclarent Lab Notebook Study on Time to Heating and Time to cooling – submitted by e-mail on 5/19/2011

[redacted]

Questions? Contact FDA/CDRH/OCE/DID at CDRH-FOISTATUS@fda.hhs.gov or 301-796-8118

Records processed under FOIA Request 2011-7654; Released 1/22/13

FDA Summary of Thermal Safety Issues:

[redacted]

Questions? Contact FDA/CDRH/OCE/DID at CDRH-FOISTATUS@fda.hhs.gov or 301-796-8118

Records processed under FOIA Request 2011-7654; Released 1/22/13

Rudy, Susan

From: Nandkumar, Srinivas
Sent: Friday, May 20, 2011 10:12 AM
To: Rudy, Susan
Subject: FW: Cyclops Update K110097

From: Khan, Anjum
Sent: Friday, May 20, 2011 9:42 AM
To: Nandkumar, Srinivas
Subject: RE: Cyclops Update K110097

[redacted]

From: Nandkumar, Srinivas
Sent: Friday, May 20, 2011 9:36 AM
To: Clupper, Daniel C; Khan, Anjum; Rudy, Susan
Subject: FW: Cyclops Update K110097

From: Yen, Keri [ACCUS] [mailto:KYen1@ITS.JNJ.com]
Sent: Thursday, May 19, 2011 9:15 PM
To: Nandkumar, Srinivas
Cc: Rudy, Susan
Subject: RE: Cyclops Update K110097

Hi Dr. Nandkumar and Ms. Rudy,

[redacted]

Keri

[redacted]

Questions? Contact FDA/CDRH/OCE/DID at CDRH-FOISTATUS@fda.hhs.gov or 301-796-8118

-----Original Message-----
From: Nandkumar, Srinivas [mailto:Srinivas.Nandkumar@fda.hhs.gov]
Sent: Thursday, May 19, 2011 1:41 PM
To: Yen, Keri [ACCUS]
Cc: Rudy, Susan
Subject: RE: Cyclops Update K110097

Keri,
Enclosed are our recommended edits to your final labeling.
Also, as discussed please provide for the record:

[redacted]

Srinivas "Nandu" Nandkumar, Ph.D.
Branch Chief, Ear, Nose, and Throat Devices Branch Division of Ophthalmic, Neurological and ENT Devices Office of Device Evaluation, WO66, Room 2436 Center for Devices and Radiological Health US Food and Drug Administration
10903 New Hampshire Avenue
Silver Spring, MD 20993
Phone: (301) 796 6480
E-mail: srinivas.nandkumar@fda.hhs.gov

THIS MESSAGE IS INTENDED FOR THE USE OF THE PARTY TO WHOM IT IS ADDRESSED AND MAY CONTAIN INFORMATION THAT IS PRIVILEGED, CONFIDENTIAL, AND PROTECTED FROM DISCLOSURE UNDER LAW. If you are not the addressee, or a person authorized to deliver the document to the addressee, you are hereby notified that any review disclosure, dissemination, copying, or other action based on the content of this communication is not authorized. If you have received this document in error, please immediately notify us by email or telephone.

Records processed under FOIA Request 2011-7654; Released 1/22/13

DEPARTMENT OF HEALTH & HUMAN SERVICES

Food and Drug Administration
ODE / DONED / ENTB
WO66 Rm 2574
10903 New Hampshire Avenue
Silver Spring, MD 20993-0002

TO: **The Record**

S. Rudy CRNP 5/26/2011

FROM: Susan Rudy, MSN, CRNP, CORLN
Nurse Consultant and Family Nurse Practitioner, ENTB

DATE: 5/26/2011

RE: **K110097 / S002 Acclarent Cyclops Multi-Angle Endoscope Model CYE002**
Clinical, Labeling & Sterility review for Special 510(k)

RECOMMENDATION: SE

HISTORY

[redacted]

Questions? Contact FDA/CDRH/OCE/DID at CDRH-FOISTATUS@fda.hhs.gov or 301-796-8118 22

Records processed under FOIA Request 2011-7654; Released 1/22/13

[redacted]

Summary of Modifications from Sponsor:

[redacted]

CLINICAL REVIEW

[redacted]

Questions? Contact FDA/CDRH/OCE/DID at CDRH-FOISTATUS@fda.hhs.gov or 301-796-8118 23

Records processed under FOIA Request 2011-7654; Released 1/22/13

712

[redacted]

[redacted]

Questions? Contact FDA/CDRH/OCE/DID at CDRH-FOISTATUS@fda.hhs.gov or 301-796-8118 24

Records processed under FOIA Request 2011-7654; Released 1/22/13

[redacted]

713

[redacted]

Questions? Contact FDA/CDRH/OCE/DID at CDRH-FOISTATUS@fda.hhs.gov or 301-796-8118

Records processed under FOIA Request 2011-7654; Released 1/22/13

[redacted]

Questions? Contact FDA/CDRH/OCE/DID at CDRH-FOISTATUS@fda.hhs.gov or 301-796-8118

Records processed under FOIA Request 2011-7654; Released 1/22/13

[redacted]

Questions? Contact FDA/CDRH/OCE/DID at CDRH-FOISTATUS@fda.hhs.gov or 301-796-8118 27

Records processed under FOIA Request 2011-7654; Released 1/22/13

[redacted] Comparative Testing

[redacted]

Questions? Contact FDA/CDRH/OCE/DID at CDRH-FOISTATUS@fda.hhs.gov or 301-796-8118

28

Records processed under FOIA Request 2011-7654; Released 1/22/13

[redacted]

Questions? Contact FDA/CDRH/OCE/DID at CDRH-FOISTATUS@fda.hhs.gov or 301-796-8118

Records processed under FOIA Request 2011-7654; Released 1/22/13

[redacted]

Questions? Contact FDA/CDRH/OCE/DID at CDRH-FOISTATUS@fda.hhs.gov or 301-796-8118

Records processed under FOIA Request 2011-7654; Released 1/22/13

[redacted]

[redacted]

Questions? Contact FDA/CDRH/OCE/DID at CDRH-FOISTATUS@fda.hhs.gov or 301-796-8118

Records processed under FOIA Request 2011-7654; Released 1/22/13

[redacted]

Questions? Contact FDA/CDRH/OCE/DID at CDRH-FOISTATUS@fda.hhs.gov or 301-796-8118

Records processed under FOIA Request 2011-7654; Released 1/22/13

[redacted]

LABELING REVIEW:

[redacted]

Questions? Contact FDA/CDRH/OCE/DID at CDRH-FOISTATUS@fda.hhs.gov or 301-796-8118

Records processed under FOIA Request 2011-7654; Released 1/22/13

The 5/24/2011 submitted user labeling is SE.

END OF REVIEW

Recommendation: SE

Questions? Contact FDA/CDRH/OCE/DID at CDRH-FOISTATUS@fda.hhs.gov or 301-796-8118

Records processed under FOIA Request 2011-7654; Released 1/22/13

K110097/S002 – Materials Science and Engineering Review

To: Susan Rudy, MSN, CRNP, CORLN
Team Leader, DONED/ENTB

From: Daniel C. Clupper, Ph.D.
Biomedical Engineer, DONED/ENTB

Date: May 9, 2011

Device: Cyclops modification (Acclarent, Inc.)

Background

[redacted]

Questions? Contact FDA/CDRH/OCE/DID at CDRH-FOISTATUS@fda.hhs.gov or 301-796-8118

35

Records processed under FOIA Request 2011-7654; Released 1/22/13

S001 Deficiencies

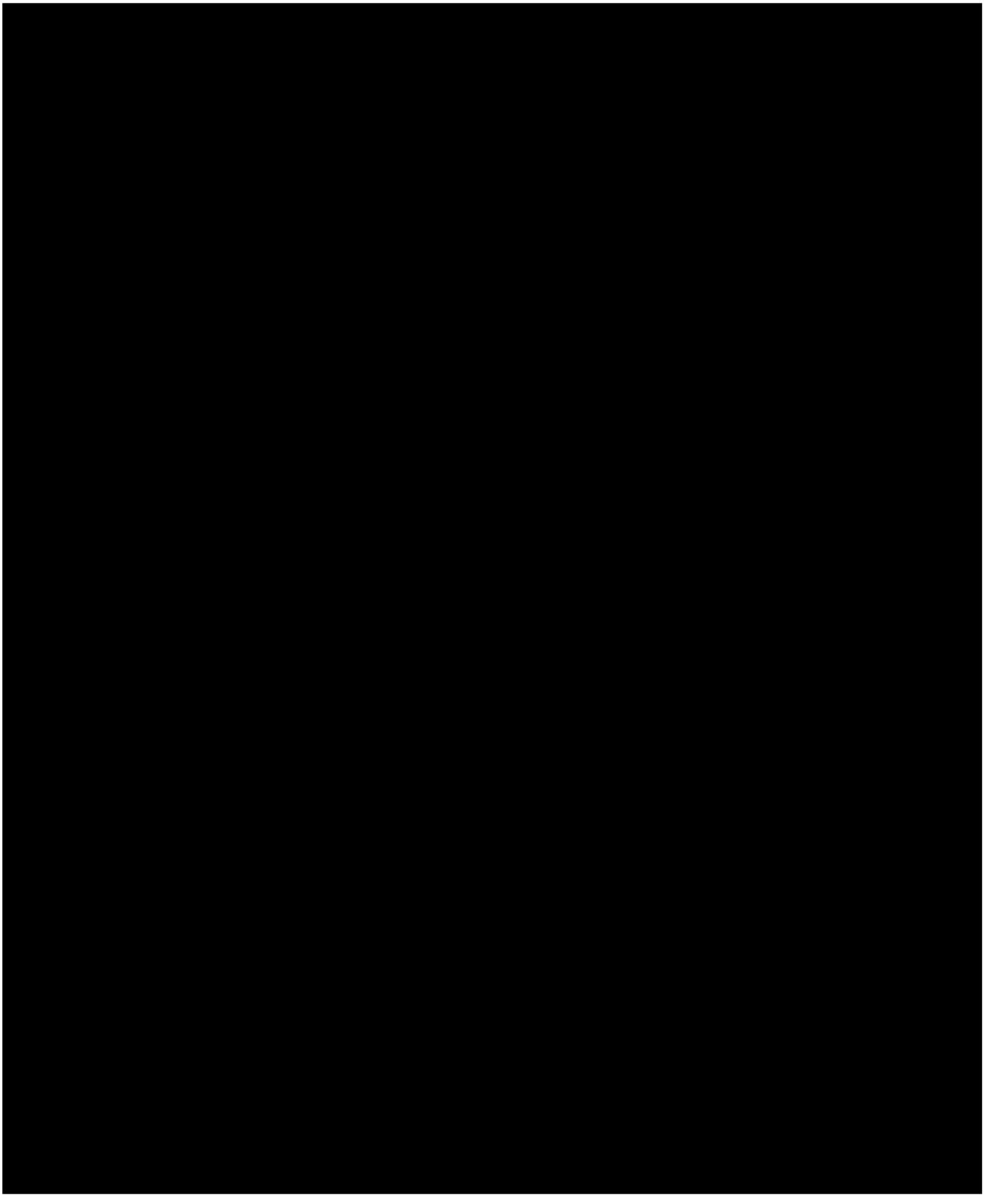

Questions? Contact FDA/CDRH/OCE/DID at CDRH-FOISTATUS@fda.hhs.gov or 301-796-8118

Records processed under FOIA Request 2011-7654; Released 1/22/13

[redacted]

K110097/S001 Warnings	Proposed Warnings
[redacted]	

Questions? Contact FDA/CDRH/OCE/DID at CDRH-FOISTATUS@fda.hhs.gov or 301-796-8118

Records processed under FOIA Request 2011-7654; Released 1/22/13

Acclarent Response – Data Table

Comparison Data Adjusted for Ambient Temperature (25.0°C)
[redacted]

Questions? Contact FDA/CDRH/OCE/DID at CDRH-FOISTATUS@fda.hhs.gov or 301-796-8118

Records processed under FOIA Request 2011-7654; Released 1/22/13

[redacted]

Daniel C Clupper 5/9/11

Daniel C. Clupper, Ph.D.
Biomedical Engineer
DONED/ENTB

Questions? Contact FDA/CDRH/OCE/DID at CDRH-FOISTATUS@fda.hhs.gov or 301-796-8118

Records processed under FOIA Request 2011-7654; Released 1/22/13

Rudy, Susan

From: Clupper, Daniel C
Sent: Tuesday, May 10, 2011 9:20 AM
To: Rudy, Susan
Subject: RE: K110097 S002 Cyclops

Sue,

Yes, the response seems reasonable.

Dan

Daniel C. Clupper, Ph.D.
Biomedical Engineer
ENT Devices Branch
DONED/ODE/CDRH
(301) 796-5620

THIS MESSAGE IS INTENDED ONLY FOR THE USE OF THE PARTY TO WHOM IT IS ADDRESSED AND MAY CONTAIN INFORMATION THAT IS PRIVILEGED, CONFIDENTIAL, AND PROTECTED FROM DISCLOSURE UNDER LAW. If you are not the addressee, or a person authorized to deliver the document to the addressee, you are hereby notified that any review, disclosure, dissemination, copying, or other action based on the content of this communication is not authorized. If you have received this document in error, please immediately notify the sender immediately by e-mail or phone.

From: Rudy, Susan
Sent: Tuesday, May 10, 2011 7:53 AM
To: Clupper, Daniel C
Subject: K110097 S002 Cyclops
Importance: High

Dan-

[redacted]

Susan F. Rudy, MSN, CRNP, CORLN
Nurse Consultant and Family Nurse Practitioner
FDA/CDRH/ODE/DONED
Ear, Nose & Throat Devices Branch
WO66 Rm 2574
10903 New Hampshire Ave.
Silver Spring, MD 20993
T: 301 796 6472
F: 301 827 4601
E: Susan.Rudy@fda.hhs.gov

Questions? Contact FDA/CDRH/OCE/DID at CDRH-FOISTATUS@fda.hhs.gov or 301-796-8118 46

(b)(4) Draft Instructions

(b)(4) Draft Instructions

(b)(4) Draft Instructions

(b)(4) Draft Instructions

(b)(4) Draft Instructions

(b)(4) Draft Instructions

(b)(4) Draft Instructions

(b)(4) Draft Instructions

(b)(4) Draft Instructions

(b)(4) Draft Instructions

(b)(4) Draft Instructions

Records processed under FOIA Request 2011-7654; Released 1/22/13

Rudy, Susan

From: Rudy, Susan
Sent: Tuesday, May 24, 2011 10:05 AM
To: 'Yen, Keri [ACCUS]'
Cc: Nandkumar, Srinivas
Subject: K110097 S002 - spoke too soon

Importance: High

Hi Keri-

(b) (4)

[redacted]

Many thanks!

Susan F. Rudy, MSN, CRNP, CORLN
Nurse Consultant and Family Nurse Practitioner
FDA/CDRH/ODE/DONED
Ear, Nose & Throat Devices Branch
WO66 Rm 2574
10903 New Hampshire Ave.
Silver Spring, MD 20993
T: 301 796 6472
F: 301 827 4601
E: Susan.Rudy@fda.hhs.gov

Questions? Contact FDA/CDRH/OCE/DID at CDRH-FOISTATUS@fda.hhs.gov or 301-796-8118 52

Rudy, Susan

From: Yen, Keri [ACCUS] [KYen1@ITS.JNJ.com]
Sent: Friday, May 20, 2011 8:26 PM
To: Rudy, Susan
Cc: Nandkumar, Srinivas
Subject: RE: K110097 (b) (4) [redacted]
Attachments: 052011 Revised 510k Summary K110097.pdf

Hi Ms. Rudy,

(b) (4) [redacted]

Keri

From: Rudy, Susan [mailto:Susan.Rudy@fda.hhs.gov]
Sent: Friday, May 20, 2011 1:42 PM
To: Yen, Keri [ACCUS]
Cc: Nandkumar, Srinivas
Subject: K110097 (b) (4) [redacted]
Importance: High

Dear Ms. Yen-

(b) (2) [redacted]

3. Performance Data:

(b) (4)

[redacted]

Have a wonderful weekend!

Susan F. Rudy, MSN, CRNP, CORLN
Nurse Consultant and Family Nurse Practitioner
FDA/CDRH/ODE/DONED
Ear, Nose & Throat Devices Branch
WO66 Rm 2574
10903 New Hampshire Ave.
Silver Spring, MD 20993
T: 301 796 6472
F: 301 827 4601
E: Susan.Rudy@fda.hhs.gov

Rudy, Susan

From: Clupper, Daniel C
Sent: Friday, May 20, 2011 4:48 PM
To: Rudy, Susan; Nandkumar, Srinivas
Subject: RE: Cyclops Update K110097 - review

That seems reasonable.

From: Rudy, Susan
Sent: Friday, May 20, 2011 3:30 PM
To: Nandkumar, Srinivas; Clupper, Daniel C
Subject: FW: Cyclops Update K110097 - review

Nandu & Dan-

(b) (4)

[redacted]

Susan ("Sue") Rudy, MSN, CRNP, CORLN
Nurse Consultant & Family Nurse Practitioner
FDA/CDRH/ODE/DONED/ENTB
T: 301 796 6472

From: Yen, Keri [ACCUS] [mailto:KYen1@ITS.JNJ.com]
Sent: Thursday, May 19, 2011 9:15 PM
To: Nandkumar, Srinivas
Cc: Rudy, Susan
Subject: RE: Cyclops Update K110097

Hi Dr. Nandkumar and Ms. Rudy,

(b) (4)

[redacted]

Keri

(b) (4)

[redacted]

(b) (4)

[redacted]

Srinivas "Nandu" Nandkumar, Ph.D.
Branch Chief, Ear, Nose, and Throat Devices Branch Division of Ophthalmic, Neurological and ENT Devices Office of Device Evaluation, WO66, Room 2436 Center for Devices and Radiological Health US Food and Drug Administration
10903 New Hampshire Avenue
Silver Spring, MD 20993
Phone: (301) 796 6480
E-mail: srinivas.nandkumar@fda.hhs.gov

THIS MESSAGE IS INTENDED FOR THE USE OF THE PARTY TO WHOM IT IS ADDRESSED AND MAY CONTAIN INFORMATION THAT IS PRIVILEGED, CONFIDENTIAL, AND PROTECTED FROM DISCLOSURE UNDER LAW. If you are not the addressee, or a person authorized to deliver the document to the addressee, you are hereby notified that any review disclosure, dissemination, copying, or other action based on the content of this communication is not authorized. If you have received this document in error, please immediately notify us by email or telephone.

Records processed under FOIA Request 2011-7654; Released 1/22/13

Rudy, Susan

From: Nandkumar, Srinivas
Sent: Thursday, May 19, 2011 4:41 PM
To: 'Yen, Keri [ACCUS]'
Cc: Rudy, Susan
Subject: RE: Cyclops Update K110097

Attachments: Edits to (b) (4) [redacted] K110097.doc

(b) (4)

[redacted]

Srinivas "Nandu" Nandkumar, Ph.D.
Branch Chief, Ear, Nose, and Throat Devices Branch
Division of Ophthalmic, Neurological and ENT Devices
Office of Device Evaluation, WO66, Room 2436
Center for Devices and Radiological Health
US Food and Drug Administration
10903 New Hampshire Avenue
Silver Spring, MD 20993
Phone: (301) 796 6480
E-mail: srinivas.nandkumar@fda.hhs.gov

THIS MESSAGE IS INTENDED FOR THE USE OF THE PARTY TO WHOM IT IS ADDRESSED AND MAY CONTAIN INFORMATION THAT IS PRIVILEGED, CONFIDENTIAL, AND PROTECTED FROM DISCLOSURE UNDER LAW. If you are not the addressee, or a person authorized to deliver the document to the addressee, you are hereby notified that any review

Questions? Contact FDA/CDRH/OCE/DID at CDRH-FOISTATUS@fda.hhs.gov or 301-796-8118

(b) (4)

[redacted]

(b)(4) Draft Instructions

(b)(4) Draft Instructions

(b)(4) Draft Instructions

(b)(4) Draft Instructions

(b)(4) Draft Instructions

(b)(4) Draft Instructions

(b)(4) Draft Instructions

(b)(4) Draft Instructions

(b)(4) Draft Instructions

(b)(4) Draft Instructions

(b)(4) Draft Instructions

Rudy, Susan

From: Rudy, Susan
Sent: Monday, May 16, 2011 10:52 AM
To: Nandkumar, Srinivas; Khan, Anjum; Clupper, Daniel C
Subject: RE: Cyclops Proposed Warning (K110097)
Importance: High
Attachments: Edits to (b) (4) [redacted] K110097.doc

(b) (4)
[redacted]

Susan ("Sue") Rudy, MSN, CRNP, CORLN
Nurse Consultant & Family Nurse Practitioner
FDA/CDRH/ODE/DONED/ENTB
T: 301 796 6472

From: Nandkumar, Srinivas
Sent: Monday, May 16, 2011 9:54 AM
To: Rudy, Susan; Khan, Anjum; Clupper, Daniel C
Subject: FW: Cyclops Proposed Warning (K110097)

From: Yen, Keri [ACCUS] [mailto:KYen1@ITS.JNJ.com]
Sent: Monday, May 16, 2011 1:01 AM
To: Nandkumar, Srinivas
Subject: RE: Cyclops Proposed Warning (K110097)

Hi Dr. Nandkumar,

(b) (4)

Keri

From: Nandkumar, Srinivas [mailto:Srinivas.Nandkumar@fda.hhs.gov]
Sent: Friday, May 13, 2011 12:16 PM
To: Yen, Keri [ACCUS]
Subject: RE: Cyclops Proposed Warning (K110097)

Keri

(b) (4)

Srinivas "Nandu" Nandkumar, Ph.D.
Branch Chief, Ear, Nose, and Throat Devices Branch
Division of Ophthalmic, Neurological and ENT Devices
Office of Device Evaluation, WO66, Room 2436

Questions? Contact FDA/CDRH/OCE/DID at CDRH-FOISTATUS@fda.hhs.gov or 301-796-8118

Rudy, Susan

From: Nandkumar, Srinivas
Sent: Friday, May 13, 2011 11:09 AM
To: Rudy, Susan
Subject: Re: Cyclops Proposed Warning (K110097)

I'm running a bit late will call soon.

From: Rudy, Susan
Sent: Friday, May 13, 2011 09:11 AM
To: Khan, Anjum; Nandkumar, Srinivas
Cc: Clupper, Daniel C; Mann, Eric A
Subject: RE: Cyclops Proposed Warning (K110097)

(b) (4)

[redacted]

Susan ("Sue") Rudy, MSN, CRNP, CORLN

Questions? Contact FDA/CDRH/OCE/DID at CDRH-FOISTATUS@fda.hhs.gov or 301-796-8118

Nurse Consultant & Family Nurse Practitioner
FDA/CDRH/ODE/DONED/ENTB
T: 301 796 6472

From: Khan, Anjum
Sent: Friday, May 13, 2011 7:26 AM
To: Nandkumar, Srinivas
Cc: Clupper, Daniel C; Rudy, Susan
Subject: RE: Cyclops Proposed Warning (K110097)

(b) (4)

[redacted]

From: Nandkumar, Srinivas
Sent: Thursday, May 12, 2011 5:04 PM
To: Rudy, Susan; Clupper, Daniel C; Khan, Anjum
Subject: FW: Cyclops Proposed Warning (K110097)

(b) (4)

[redacted]

From: Yen, Keri [ACCUS] [mailto:KYen1@ITS.JNJ.com]
Sent: Thursday, May 12, 2011 4:48 PM
To: Nandkumar, Srinivas
Cc: Pellegrini, Niamh [JJCUS]; Bishop, Mark [ACCUS]
Subject: Cyclops Proposed Warning (K110097)

Hi Dr. Nandkumar,

(b) (4)

[redacted]

Rudy, Susan

From: Khan, Anjum
Sent: Friday, May 13, 2011 3:18 PM
To: Rudy, Susan
Cc: Nandkumar, Srinivas
Subject: RE: Cyclops Proposed Warning (K110097)

I second your request. Angie

From: Rudy, Susan
Sent: Friday, May 13, 2011 3:16 PM
To: Nandkumar, Srinivas; Clupper, Daniel C; Khan, Anjum
Subject: RE: Cyclops Proposed Warning (K110097)
Importance: High

(b) (4)

[redacted]

Susan ("Sue") Rudy, MSN, CRNP, CORLN
Nurse Consultant & Family Nurse Practitioner
FDA/CDRH/ODE/DONED/ENTB
T: 301 796 6472

From: Nandkumar, Srinivas
Sent: Friday, May 13, 2011 3:12 PM
To: Rudy, Susan; Clupper, Daniel C; Khan, Anjum
Subject: FW: Cyclops Proposed Warning (K110097)

From: Yen, Keri [ACCUS] [mailto:KYen1@ITS.JNJ.com]
Sent: Friday, May 13, 2011 3:08 PM
To: Nandkumar, Srinivas
Subject: RE: Cyclops Proposed Warning (K110097)

Hi Dr. Nandkumar,

(b) (4)

Keri

From: Nandkumar, Srinivas [mailto:Srinivas.Nandkumar@fda.hhs.gov]
Sent: Friday, May 13, 2011 9:12 AM
To: Yen, Keri [ACCUS]
Subject: RE: Cyclops Proposed Warning (K110097)

Keri
(b) (4)

Srinivas "Nandu" Nandkumar, Ph.D.
Branch Chief, Ear, Nose, and Throat Devices Branch
Division of Ophthalmic, Neurological and ENT Devices
Office of Device Evaluation, WO66, Room 2436
Center for Devices and Radiological Health
US Food and Drug Administration
10903 New Hampshire Avenue
Silver Spring, MD 20993
Phone: (301) 796 6480
E-mail: srinivas.nandkumar@fda.hhs.gov

THIS MESSAGE IS INTENDED FOR THE USE OF THE PARTY TO WHOM IT IS ADDRESSED AND MAY CONTAIN INFORMATION THAT IS PRIVILEGED, CONFIDENTIAL, AND PROTECTED FROM DISCLOSURE UNDER LAW. If you are not the addressee, or a person authorized to deliver the document to the addressee, you are hereby notified that any review disclosure, dissemination, copying, or other action based on the content of this communication is not authorized. If you have received this document in error, please immediately notify us by email or telephone.

From: Yen, Keri [ACCUS] [mailto:KYen1@ITS.JNJ.com]
Sent: Thursday, May 12, 2011 4:48 PM
To: Nandkumar, Srinivas
Cc: Pellegrini, Niamh [JJCUS]; Bishop, Mark [ACCUS]
Subject: Cyclops Proposed Warning (K110097)

Rudy, Susan

From: Nandkumar, Srinivas
Sent: Thursday, May 12, 2011 5:04 PM
To: Rudy, Susan; Clupper, Daniel C; Khan, Anjum
Subject: FW: Cyclops Proposed Warning (K110097)

(b) (4)

[redacted]

From: Yen, Keri [ACCUS] [mailto:KYen1@ITS.JNJ.com]
Sent: Thursday, May 12, 2011 4:48 PM
To: Nandkumar, Srinivas
Cc: Pellegrini, Niamh [JJCUS]; Bishop, Mark [ACCUS]
Subject: Cyclops Proposed Warning (K110097)

(b) (4)

[redacted]

Keri

Records processed under FOIA Request 2011-7654; Released 1/22/13

Rudy, Susan

From: Rudy, Susan
Sent: Wednesday, May 11, 2011 1:17 PM
To: 'Yen, Keri [ACCUS]'
Cc: Nandkumar, Srinivas
Subject: RE: K110097 / S002 Acclarent Cyclops requested Teleconference this week

Importance: High

Dear Ms. Yen-

(b) (4)

[redacted]

Susan ("Sue") Rudy, MSN, CRNP, CORLN
Nurse Consultant & Family Nurse Practitioner
FDA/CDRH/ODE/DONED/ENTB
T: 301 796 6472

-----Original Message-----
From: Yen, Keri [ACCUS] [mailto:KYen1@ITS.JNJ.com]
Sent: Wednesday, May 11, 2011 11:52 AM
To: Rudy, Susan
Subject: K110097 Teleconference

Good morning Ms. Rudy,

(b) (4)

[redacted]

Keri

Questions? Contact FDA/CDRH/OCE/DID at CDRH-FOISTATUS@fda.hhs.gov or 301-796-8118

(b) (4)

(b) (4)

(b) (4)

(b) (4)

(b) (4)

(b) (4)

Records processed under FOIA Request 2011-7654; Released 1/22/13

Rudy, Susan

From: Clupper, Daniel C
Sent: Wednesday, May 11, 2011 11:15 AM
To: Rudy, Susan
Cc: Nandkumar, Srinivas; Khan, Anjum
Subject: RE: K110097 / S002 Acclarent Cyclops - interactive query
Follow Up Flag: Follow up
Flag Status: Red

Sue,

(b) (4)

[redacted]

Thanks,
Dan

(b) (4)

[redacted]

Questions? Contact FDA/CDRH/OCE/DID at CDRH-FOISTATUS@fda.hhs.gov or 301-796-8118

Records processed under FOIA Request 2011-7654; Released 1/22/13

Rudy, Susan

From: Rudy, Susan
Sent: Tuesday, May 10, 2011 9:58 AM
To: 'Yen, Keri [ACCUS]'
Cc: Nandkumar, Srinivas; Clupper, Daniel C
Subject: K110097 / S002 Acclarent Cyclops - interactive query

Importance: High

Dear Ms. Yen-

(b) (4)

[redacted]

Susan F. Rudy, MSN, CRNP, CORLN
Nurse Consultant and Family Nurse Practitioner
FDA/CDRH/ODE/DONED
Ear, Nose & Throat Devices Branch
WO66 Rm 2574

Questions? Contact FDA/CDRH/OCE/DID at CDRH-FOISTATUS@fda.hhs.gov or 301-796-8118

Records processed under FOIA Request 2011-7654; Released 1/22/13

5/3/2011

(b) (4)

[redacted]

Questions? Contact FDA/CDRH/OCE/DID at CDRH-FOISTATUS@fda.hhs.gov or 301-796-8118

Records processed under FOIA Request 2011-7654; Released 1/22/13

5/3/2011

(b) (4)

[redacted]

Questions? Contact FDA/CDRH/OCE/DID at CDRH-FOISTATUS@fda.hhs.gov or 301-796-8118

Rudy, Susan

From: Yen, Keri [ACCUS] [KYen1@ITS.JNJ.com]
Sent: Tuesday, May 03, 2011 9:23 PM
To: Rudy, Susan
Cc: Nandkumar, Srinivas; Clupper, Daniel C
Subject: RE: K110097 / S002 Acclarent Cyclops Gen 2 - interactive query
Attachments: K110097 Query Response 050311.pdf

Hello Ms. Rudy,

Our response to the questions below can be found in the attached document. Please let us know if we can clarify anything for you.

Please confirm receipt of this email.

Thank you.

Keri

From: Rudy, Susan [mailto:Susan.Rudy@fda.hhs.gov]
Sent: Tuesday, May 03, 2011 4:46 AM
To: Yen, Keri [ACCUS]
Cc: Nandkumar, Srinivas; Clupper, Daniel C
Subject: K110097 / S002 Acclarent Cyclops Gen 2 - interactive query
Importance: High

Dear Ms. Yen-

Please confirm receipt of this message and let us know how quickly you can respond.

(b) (4)

[redacted]

Susan F. Rudy, MSN, CRNP, CORLN

Nurse Consultant and Family Nurse Practitioner
FDA/CDRH/ODE/DONED
Ear, Nose & Throat Devices Branch
WO66 Rm 2574
10903 New Hampshire Ave.
Silver Spring, MD 20993
T: 301 796 6472
F: 301 827 4601
E: Susan.Rudy@fda.hhs.gov

Rudy, Susan

From: Rudy, Susan
Sent: Thursday, April 28, 2011 9:19 PM
To: 'Yen, Keri [ACCUS]'
Subject: RE: K110097 S002 Acclarent Cyclops Multiangle Endoscope - interactive query

Sorry for the delay. We appreciate your prompt response. The information was received and is under review.

Susan ("Sue") Rudy, MSN, CRNP, CORLN
Nurse Consultant & Family Nurse Practitioner
FDA/CDRH/ODE/DONED/ENTB
T: 301 796 6472

From: Yen, Keri [ACCUS] [mailto:KYen1@ITS.JNJ.com]
Sent: Thursday, April 28, 2011 9:16 PM
To: Rudy, Susan
Subject: FW: K110097 S002 Acclarent Cyclops Multiangle Endoscope - interactive query

Hi Ms. Rudy,

Can you please confirm receipt of this email below? Thanks.

Keri

From: Yen, Keri [ACCUS]
Sent: Thursday, April 28, 2011 9:33 AM
To: 'Rudy, Susan'
Cc: Nandkumar, Srinivas
Subject: RE: K110097 S002 Acclarent Cyclops Multiangle Endoscope - interactive query

Hi Ms. Rudy,

Thank you for your prompt review.

(b) (4)

[redacted]

(b) (4)

[redacted]

Regards,

Keri

From: Rudy, Susan [mailto:Susan.Rudy@fda.hhs.gov]
Sent: Thursday, April 28, 2011 5:23 AM
To: Yen, Keri [ACCUS]
Cc: Nandkumar, Srinivas
Subject: K110097 S002 Acclarent Cyclops Multiangle Endoscope - interactive query
Importance: High

Dear Ms. Yen-

(b) (4)

[redacted]

Susan F. Rudy, MSN, CRNP, CORLN
Nurse Consultant and Family Nurse Practitioner
FDA/CDRH/ODE/DONED
Ear, Nose & Throat Devices Branch
WO66 Rm 2574
10903 New Hampshire Ave.
Silver Spring, MD 20993
T: 301 796 6472
F: 301 827 4601
E: Susan.Rudy@fda.hhs.gov

Rudy, Susan

From: Rudy, Susan
Sent: Thursday, April 28, 2011 9:18 PM
To: Khan, Anjum
Cc: Clupper, Daniel C; Mann, Eric A
Subject: FW: K110097 S002 Acclarent Cyclops Multiangle Endoscope - thermal safety issue
Importance: High
Attachments: Temp Variations Nasal endo 2011.pdf; Goldstein WHO 2003 .pdf

Dear Angie-

(b) (4)

[redacted]

(b) (4)

[redacted]

Thanks!

Susan ("Sue") Rudy, MSN, CRNP, CORLN
Nurse Consultant & Family Nurse Practitioner
FDA/CDRH/ODE/DONED/ENTB
T: 301 796 6472

From: Yen, Keri [ACCUS] [mailto:KYen1@ITS.JNJ.com]
Sent: Thursday, April 28, 2011 12:33 PM
To: Rudy, Susan
Cc: Nandkumar, Srinivas
Subject: RE: K110097 S002 Acclarent Cyclops Multiangle Endoscope - interactive query

Hi Ms. Rudy,

Thank you for your prompt review.

(b) (4)

[redacted]

(b) (4)

[redacted]

(b) (4)

(b) (4)

Please let me know if you have any questions.

Regards,

Keri

From: Rudy, Susan [mailto:Susan.Rudy@fda.hhs.gov]
Sent: Thursday, April 28, 2011 5:23 AM
To: Yen, Keri [ACCUS]
Cc: Nandkumar, Srinivas
Subject: K110097 S002 Acclarent Cyclops Multiangle Endoscope - interactive query
Importance: High

Dear Ms. Yen-

We note that you are using different nomenclature for the parts of the endoscope that were tested.

(b) (4)

Thank you in advance!

Susan F. Rudy, MSN, CRNP, CORLN
Nurse Consultant and Family Nurse Practitioner
FDA/CDRH/ODE/DONED
Ear, Nose & Throat Devices Branch

WO66 Rm 2574
10903 New Hampshire Ave.
Silver Spring, MD 20993
T: 301 796 6472
F: 301 827 4601
E: Susan.Rudy@fda.hhs.gov

(b) (4)

Rudy, Susan

From: Rudy, Susan
Sent: Thursday, April 21, 2011 1:47 PM
To: 'Yen, Keri [ACCUS]'
Cc: Nandkumar, Srinivas; Clupper, Daniel C
Subject: RE: K110097 S001 Acclarent Cyclops Teleconference material

Hi Ms. Yen-

(b) (4)

[redacted]

Best regards-

Susan ("Sue") Rudy, MSN, CRNP, CORLN
Nurse Consultant & Family Nurse Practitioner
FDA/CDRH/ODE/DONED/ENTB
T: 301 796 6472

From: Yen, Keri [ACCUS] [mailto:KYen1@ITS.JNJ.com]
Sent: Wednesday, April 20, 2011 4:04 PM
To: Rudy, Susan
Cc: Nandkumar, Srinivas; Clupper, Daniel C
Subject: RE: K110097 S001 Acclarent Cyclops Teleconference material

Hi Ms. Rudy,

(b) (4)

[redacted]

(b) (4)

[redacted]

Thank you for your time.

Regards,
Keri

From: Rudy, Susan [mailto:Susan.Rudy@fda.hhs.gov]
Sent: Tuesday, April 19, 2011 2:32 PM
To: Yen, Keri [ACCUS]
Cc: Nandkumar, Srinivas; Clupper, Daniel C
Subject: K110097 S001 Acclarent Cyclops Teleconference material
Importance: High

Dear Ms. Yen-

(b) (4)

[redacted]

(b) (4)

[redacted]

Susan F. Rudy, MSN, CRNP, CORLN
Nurse Consultant and Family Nurse Practitioner
FDA/CDRH/ODE/DONED
Ear, Nose & Throat Devices Branch
WO66 Rm 2574
10903 New Hampshire Ave.

Silver Spring, MD 20993
T: 301 796 6472
F: 301 827 4601
E: Susan.Rudy@fda.hhs.gov

Records processed under FOIA Request 2011-7654; Released 1/22/13

[redacted]

From: [redacted]
Sent: [redacted]
To: [redacted]
Subject: [redacted]

[redacted]

[redacted]

Begin forwarded message:

From: "Campbell, Monika" <mcampbell@ksea.com>
Date: April 19, 2011 4:06:42 PM PDT
To: [redacted]
Subject: Re: 510(k) Clearance Letter - Hopkins II Telescope

Yes, the 510(k) does cover this scope for ENT- nasal surgery procedure.

Regards,
Monika

Sent from my iPhone

On Apr 19, 2011, at 11:46 AM, [redacted] wrote:

Hi Monika,

Thanks for your prompt reply last week. You are in regulatory and you understand the details people want me to provide. I think (hope) this is the last item I will be requested. [redacted].

The 510(k) letter you provided does not call out the Hopkins II rigid endoscope.

Can you please re-confirm that the catalog number I gave you (7230 CWA) is covered by K945788? [redacted]

Your confirmation would be greatly appreciated.

Thanks.

CONFIDENTIAL

[redacted]

Questions? Contact FDA/CDRH/OCE/DID at CDRH-FOISTATUS@fda.hhs.gov or 301-796-8118 102

Records processed under FOIA Request 2011-7654; Released 1/22/13

Yen, Keri [ACCUS]

From: [redacted]
Sent: Wednesday, April 13, 2011 5:42 PM
To: Yen, Keri [ACCUS]
Subject: Fwd: 510(k) Clearance Letter - Hopkins II Telescope
Attachments: image001.png; ATT1248900.htm; K945788.pdf; ATT1248901.htm

Begin forwarded message:

From: "Campbell, Monika" <mcampbell@ksea.com>
Date: April 13, 2011 10:11:42 AM PDT
To: [redacted]
Subject: RE: 510(k) Clearance Letter - Hopkins II Telescope

Dear Dr. [redacted]
The attached 510(k) Clearance Letter covers the Rigid Hopkins scopes indicated for nasal endoscopic surgery per your requested. Additional 510(k) information is provided below.

Questions? Contact FDA/CDRH/OCE/DID at CDRH-FOISTATUS@fda.hhs.gov or 301-796-8118

Records processed under FOIA Request 2011-7654; Released 1/22/13

ENT

DEPARTMENT OF HEALTH & HUMAN SERVICES

Public Health Service

Food and Drug Administration
9200 Corporate Boulevard
Rockville MD 20850

JAN 25 1995

Betty M. Johnson
Manager, Regulatory Affairs
Karl Storz Endoscopy America, Inc.
600 Corporate Pointe
Culver City, California 90230-7600

Re: K945788
Trade Name: KSEA Rigid Telescopes for Endoscopic Procedures (List of models and classifications enclosed)
Regulatory class: I and II
Dated: November 23, 1994
Received: November 25, 1994

Dear Ms. Johnson:

We have reviewed your Section 510(k) notification of intent to market the device referenced above and we have determined the device is substantially equivalent to a legally marketed predicate device. You may, therefore, market the device, subject to the general controls provisions of the Federal Food, Drug, and Cosmetic Act (Act). General controls provisions of the Act include requirements for registration, listing of devices, good manufacturing practices, and labeling, and prohibitions against misbranding and adulteration.

If your device is classified (see above) into either class II (Special Controls) or class III (Premarket Approval) it may be subject to such additional controls. Existing major regulations affecting your device can be found in the Code of Federal Regulations, Title 21, Parts 800 to 895. In addition, the Food and Drug Administration (FDA) may publish further announcements concerning your device in the Federal Register. Please note: this response to your premarket notification does not affect any obligation you might have under the Radiation Control for Health and Safety Act of 1968, or other Federal laws or regulations.

This letter immediately will allow you to begin marketing your device as described. An FDA finding of substantial equivalence of your device to a legally marketed predicate device results in a classification for your device and permits your device to proceed to the market, but it does not mean that FDA approves your device. Therefore, you may not promote or in any way represent your device or its labeling as being approved by FDA.

Questions? Contact FDA/CDRH/OCE/DID at CDRH-FOISTATUS@fda.hhs.gov or 301-796-8118

Records processed under FOIA Request 2011-7654; Released 1/22/13

If you desire specific advice on the labeling for your device, please contact the Office of Compliance, Promotion and Advertising Policy Staff (HFZ-326) at (301) 594-1342. Other general information on your responsibilities under the Act may be obtained from the Division of Small Manufacturers Assistance at its toll-free number (800) 638-2041 or at (301) 443-6597.

Sincerely yours,

for Lillian Yin, Ph.D.
Director, Division of Reproductive,
Abdominal, Ear, Nose and Throat,
and Radiological Devices
Office of Device Evaluation
Center for Devices and
Radiological Health

Questions? Contact FDA/CDRH/OCE/DID at CDRH-FOISTATUS@fda.hhs.gov or 301-796-8118

(b) (4)

(b) (4)

Rudy, Susan

From: Yen, Keri [ACCUS] [KYen1@ITS.JNJ.com]
Sent: Friday, April 08, 2011 4:26 PM
To: Rudy, Susan
Cc: Nandkumar, Srinivas
Subject: RE: K110097 / S001 Acclarent Cyclops Multiangle Endoscope Model CYE002 - Decision for telephone hold
Follow Up Flag: Follow up
Flag Status: Red

Hi Ms. Rudy,

(b) (4)

[redacted]

Keri

From: Rudy, Susan [mailto:Susan.Rudy@fda.hhs.gov]
Sent: Friday, April 08, 2011 12:50 PM
To: Yen, Keri [ACCUS]
Cc: Nandkumar, Srinivas
Subject: K110097 / S001 Acclarent Cyclops Multiangle Endoscope Model CYE002 - Decision for telephone hold
Importance: High

Dear Ms. Yen-

(b) (4)

[redacted]

(b) (4)

Susan F. Rudy, MSN, CRNP, CORLN
Nurse Consultant and Family Nurse Practitioner
FDA/CDRH/ODE/DONED
Ear, Nose & Throat Devices Branch
WO66 Rm 2574
10903 New Hampshire Ave.
Silver Spring, MD 20993
T: 301 796 6472
F: 301 827 4601
E: Susan.Rudy@fda.hhs.gov

THIS MESSAGE IS INTENDED ONLY FOR THE USE OF THE PARTY TO WHOM IT IS ADDRESSED AND MAY CONTAIN INFORMATION THAT IS PRIVILEGED, CONFIDENTIAL, AND PROTECTED FROM DISCLOSURE UNDER LAW. If you are not the addressee, or a person authorized to deliver the document to the addressee, you are hereby notified that any review disclosure, dissemination, copy or other action based on the content of this communication is not authorized. If you have received this document in error please immediately notify us by e-mail or telephone.

Rudy, Susan

From: Rudy, Susan
Sent: Tuesday, April 19, 2011 5:32 PM
To: 'Yen, Keri [ACCUS]'
Cc: Nandkumar, Srinivas; Clupper, Daniel C
Subject: K110097 S001 Acclarent Cyclops Teleconference material

Importance: High

Attachments: FDA Minutes K110097_ 8 MAR 2011.pdf; FDA Minutes K110097 S1_19APR2011.pdf

Dear Ms. Yen-

(b) (4)

[redacted]

Records processed under FOIA Request 2011-7654; Released 1/22/13

(b) (4)

[redacted]

Best regards-

Susan F. Rudy, MSN, CRNP, CORLN
Nurse Consultant and Family Nurse Practitioner
FDA/CDRH/ODE/DONED
Ear, Nose & Throat Devices Branch
WO66 Rm 2574
10903 New Hampshire Ave.
Silver Spring, MD 20993
T: 301 796 6472
F: 301 827 4601
E: Susan.Rudy@fda.hhs.gov

Questions? Contact FDA/CDRH/OCE/DID at CDRH-FOISTATUS@fda.hhs.gov or 301-796-8118

111

(b) (4)

(b) (4)

(b) (4)

(b) (4)

(b) (4)

(b) (4)

(b)(4) Testing & Stats Data

(b)(4) Testing & Stats Data

(b)(4) Testing & Stats Data

(b)(4) Testing & Stats Data

(b)(4) Testing & Stats Data

(b)(4) Testing & Stats Data

(b)(4) Testing & Stats Data

(b)(4) Testing & Stats Data

(b)(4) Testing & Stats Data

(b)(4) Testing & Stats Data

(b)(4) Testing & Stats Data

(b)(4) Testing & Stats Data

(b)(4) Testing & Stats Data

(b)(4) Testing & Stats Data

(b)(4) Testing & Stats Data

(b)(4) Testing & Stats Data

(b)(4) Testing & Stats Data

(b)(4) Testing & Stats Data

(b)(4) Testing & Stats Data

Records processed under FOIA Request 2011-7654; Released 1/22/13

Wolters Kluwer Health | OvidSP

My Account | Problems? Click Here to Ask an NIH Librar... | Support & Training | Help | Logoff

Search Journals Books My Workspace

Journals A-Z > Laryngoscope > 106(2) February 1996 > In Vitro and ...

The Laryngoscope
Issue: Volume 106(2), February 1996, pp 213-216
Copyright: © The American Laryngological, Rhinological & Otalogical Society, Inc.
Publication Type: [Independent Papers]
ISSN: 0023-852X
Accession: 00005537-199602000-00020

[Independent Papers] Previous Article | Table of Contents | Next

In Vitro and *In Vivo* Determination of the Thermal Effect of Middle Ear Endosco

Bottrill, Ian FRCS; Perrault, Donald F. Jr.; Poe, Dennis MD

Author Information

From the Lahey Clinic, Boston.

Presented at the 4th International Meeting on Inner Ear Surgery and Medicine, Aspen, Colo., July 1994.

This study was supported in part by a grant from the Bernard F. Gordon Foundation and the Eleanor Naylor Dana Ch Trust.

Editor's Note: This Manuscript was accepted for publication June 30, 1995.

Send Reprint Requests to Dennis Poe, MD, Otolaryngology Research Center, New England Medical Center #187, 750 Washington St., Boston, MA 02111.

Back to Top

Abstract

During middle ear endoscopy, patients frequently experience vertigo. We theorized that this effect is secondary to heat produced by the scope. We evaluated two Hopkins rods and two fiberoptic scopes to assess the temperature elevation at the lateral semicircular canal (LSCC) of temporal bones and in a live canine model. These results were compared to the results of a standard 44° C water caloric.

We demonstrated in both models that the temperature rise at the LSCC increased relative to the scope diameter and that the Hopkins rods produced the same or greater heating effect than a warm caloric. Direct exposure of the thermocouple to the light produced a greater temperature elevation.

We conclude that endoscopes produce sufficient heat to induce caloric stimulation of the LSCC. Care should be exercised to prevent the possibility of thermal injury.

Back to Top

INTRODUCTION

Middle ear endoscopy is becoming increasingly popular following its initial

137
Questions? Contact FDA/CDRH/OCE/DID at CDRH-FOISTATUS@fda.hhs.gov or 301-796-8118

Records processed under FOIA Request 2011-7654; Released 1/22/13

description by Mer, *et al.*1 Endoscopes yield extraordinary views of the middle ear and eustachian tube, an advantage for diagnostic examinations. Previously published work from this department has shown that Hopkins rods yield superior images compared to flexible scopes 2 and has discussed the role of middle ear endoscopy and its indications.3

During endoscopy, patients commonly experience vertigo approximately 45 seconds after introduction of the scope through the tympanic membrane. We theorized that this effect is most likely due to the heating of the middle ear. The light source we use is a 300-W xenon unit, and it is readily observed that heat is generated at the tip of the scope.

This study was designed to assess the thermal effect of middle ear endoscopy *in vitro* and *in vivo*. We investigated the heat generated at the lateral semicircular canal (LSCC) during endoscopy. In addition, we measured the temperature in the middle ear directly beneath the scope. Finally, as a reference point we assessed the thermal effect of a warm-water caloric, theorizing that, if the heating effect of the scopes produce similar temperature elevations, it can be concluded that the temperature rises are sufficient to induce vertigo.

Back to Top

MATERIALS AND METHODS

The following endoscopes were investigated: 3-mm zero-degree and 1.9-mm thirty-degree Hopkins rods (Karl Storz Endoscopy-America Inc., Culver City, Calif.) and the 0.8-mm and 1.2-mm flexible Alphascopes® (Xomed Treace, Jacksonville, Fla.). A 300-W Karl Storz xenon light source (model 610) was used.

Temperature measurements were recorded with a 0.23-mm type T thermocouple with a response time of 5 msec (IT-18, Physitemp, Clifton, N.J.) linked to an Apple Macintosh microcomputer with LabVIEW 2 data acquisition software (version 2.1.1) and an analog-to-digital board (National Instrument Corporation, Austin, Tex.). The thermocouple was calibrated prior to all recordings and, in addition, an assessment of the stability of its recording was made.

The study was divided into two phases; initial investigations were performed on human temporal bones. These techniques were then applied to a live canine model. We investigated dogs already scheduled for terminal study under a separate protocol. The protocol received full approval from the hospital animal research committee. The Lahey Clinic animal management program meets National Institutes of Health standards as set forth in the *Guide for the Care and Use of Laboratory Animals* (DHHS Publication No. NIH 85-23 Revised 1985).

A limited cortical mastoidectomy was performed in the temporal bone to expose the LSCC. The thermocouple was placed in a 0.4-mm hole drilled in the LSCC, and the defect in the mastoid bone was filled with bone wax. In the canine model, the mastoid was exposed via a postauricular incision, and the cartilaginous external auditory canal was transected to allow direct irrigation of the tympanic membrane.

In all experimental procedures, temperature data were collected for 5 minutes. The first 30 seconds of all graphs represent the baseline used to calculate temperature change. Five runs were performed, and the values were averaged to produce a composite curve. The bones were allowed to cool back to their baseline temperature between each recording. The following procedures were then

Questions? Contact FDA/CDRH/OCE/DID at CDRH-FOISTATUS@fda.hhs.gov or 301-796-8118

Records processed under FOIA Request 2011-7654 Released 1/22/13

performed, the first two *in vitro* and *in vivo*.

1. *Temperature changes generated by water at 44° C.* A warm-water caloric was performed, and the resulting temperature rise at the LSCC was recorded. This provided a reference point for later interpretation of the heating effects of the scopes.

2. *Temperature changes at the lateral semicircular canal.* A myringotomy was made in the posterior superior segment, and the scopes were advanced through the hole and held in place with a clamp. The temperature was recorded with the light source on for 4.5 minutes.

3. *Direct effect of the scopes on the thermocouple.* This study was performed on the temporal bones only. The thermocouple was placed through a separate myringotomy and positioned on the promontory in the center of the beam of light. The scopes were held 2 mm from the thermocouple. Recordings were made and averaged in the same fashion described in *1* and *2*.

Back to Top

RESULTS

Back to Top

Temporal Bone

All measurements in the temporal bones were highly reproducible. Temperature changes of less than 0.2° C were found to be within the noise of the equipment. Temperature rises were noted during all procedures and were greater when the larger-diameter scopes were used. Direct illumination of the thermocouple produced higher rises than those recorded by the thermocouple within the LSCC. All temperature rises followed an exponential curve. The temperature rises produced by the Alphascopes® reached a maximum during a 4.5-minute period of investigation; however, the Hopkins rods were still producing a temperature rise at 4.5 minutes. Temperature changes are summarized in Table I.

Table I

1. *Temperature changes generated by water at 44° C.* When a caloric was performed, the maximum temperature rise recorded in the LSCC was 7° C. All recordings were highly reproducible.

2. *Temperature changes in the LSCC.* All scopes produced a temperature rise (Table I). The two Alphascopes® produced only a small rise; however, the Hopkins rods produced a significant rise almost equal to that produced by the warm water (Fig. 1). The rate of temperature change was very similar to that produced by the warm-water caloric.

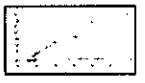
Fig. 1

3. *Direct effect of the scopes on the thermocouple.* All scopes produced a significant temperature rise, which was greatest with the larger scopes (Table I and Fig. 2). After use of the 3-mm Hopkins rod, a 5-mm burn was seen on the medial wall of the middle ear, and charring was evident at the margins of the myringotomy. The rate of temperature change was much greater than with either of the first two protocols.

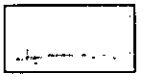
Fig. 2

Back to Top

Canine Model

The averaged data presented in the graphs showed more "noise" than was obtained from the temporal bone. The noise represents true fluctuations in the temperature of the LSCC and is more prominent because the overall temperature changes are much smaller than in the temporal bone model. The maximum change

Questions? Contact FDA/CDRH/OCE/DID at CDRH-FOISTATUS@fda.hhs.gov or 301-796-8118

Records processed under FOIA Request 2011-7654; Released 1/22/13

recorded was in the region of 1° C, and the average noise for each graph is plus or minus 0.3° C. In view of the noise recorded, the data are only interpreted as a trend of change in temperature.

1. *Temperature changes generated by water at 44° C.* The temperature in the LSCC rose by approximately 1° C; thereafter, it fluctuated around this value (Fig. 3).

Fig. 3

2. *Temperature changes in the lateral semicircular canal.* The Alphascope 8® produced an average rise of 0.05° C, which is within the noise of the measurement; therefore, this cannot be interpreted as a true rise. The Alphascope 12® produced an average rise of 0.25° C, which should be interpreted with caution because it is close to the resolution of the thermocouple (Fig. 4). The two Hopkins rods produced consistent rises that continued throughout the period of illumination (Fig. 5). The 1.9-mm and 3-mm scopes produced average maximal rises of 0.8° C and 1.1° C, respectively. The average maximal rises for all scopes are summarized in Table II.

Fig. 4

Fig. 5

Table

Back to Top

DISCUSSION

Vertigo resulting from a caloric stimulus is thought to be due to changes in endolymph density. This creates a convection current within the LSCC, stimulating the vestibular receptors.

All scopes produced a temperature rise that varied in relation to its diameter and was higher with direct illumination of the thermocouple. We theorized that if the temperature rises resulting from the use of the scopes approximated the effect of a warm-water caloric, it is reasonable to conclude that the scope may be producing its vertiginous effect as a result of thermal stimulation of the labyrinth.

The temporal bone study demonstrated that both Hopkins rods produced temperature rises equivalent to a warm caloric; this was confirmed in the animal study. However, the magnitude of the temperature changes was markedly different *in vivo*. The proposed explanation for this is fourfold: first, in the dog's ear the baseline temperature was approximately 37° C and not room temperature (24° C in our study). This reduces the thermal gradient between the tip of the scope and the middle ear. Second, the live dog has an intact blood and perilymph circulation. These two effects act as a heat sink, limiting the rate of rise in temperature by removing the heat produced by the scope. Third, living tissue has a high water content; consequently, it has a high thermal coefficient of heating and therefore, a higher energy input is required for a unit temperature rise. Finally, the temporal bones used were preserved, rendering them a dark brown color that would absorb light and heat to a greater extent than the paler mucosa of the dog's middle ear.

Cawthorne and Cobb 4 studied the temperature changes at the LSCC in humans undergoing membranous labyrinthectomy. They found that irrigation of the external auditory canal with water at 44° C for 40 seconds produced an average temperature rise at the LSCC of 0.8° C. In two patients, they also irrigated for 6 minutes and found a temperature rise of 1.8° C "in the more reliable of the two tests." The temperature rises they recorded, although in a limited series, correlate well with the values we recorded in the dogs; therefore, it is reasonable to conclude that our results are representative of the effect in human subjects.

Direct illumination of the thermocouple in the temporal bone produced dramatic

Questions? Contact FDA/CDRH/OCE/DID at CDRH-FOISTATUS@fda.hhs.gov or 301-796-8118

Records processed under FOIA Request 2011-7654; Released 1/22/13

temperature rises. In the canine model no charring was seen, but tissue desiccation was evident. This difference is a consequence of the four factors listed above. Despite the large temperature rises recorded *in vitro*, any deleterious effects from direct illumination cannot be accurately determined without histological studies.

Ways to limit the thermal effect include setting the light source to the lowest effective level, ensuring that the scope is not held too close to the tissues, and moving the scope continuously during inspection to prevent overheating of one area. Should the patient experience vertigo, the scope should be withdrawn and reintroduced when the effect resolves. In addition, we have recently acquired a fluid-filled light lead (Karl Storz); noticeably less heat is produced at the end of the scopes, but we have not formally investigated this.

Back to Top

CONCLUSIONS

The heat generated in the middle ear space during endoscopy produces a temperature elevation in the LSCC sufficient to induce rotatory vertigo. From the results of this study, changes in scope design and illumination are suggested to limit the heat generated in the middle ear during endoscopy. These changes will prevent the possibility of tissue damage and limit vestibular disturbance, which is unpleasant and can prematurely terminate the office examination.

Back to Top

BIBLIOGRAPHY

1. Mer, S.B., Derbyshire, A.J., Brushenko. A., *et al.*: Fiberoptic Endotoscopes for Examining the Middle Ear. *Arch Otolaryngol*, 85:61-67, 1967. [Context Link]

2. Poe, D.S., Rebeiz, E.E. Pankratov, M.M., *et al.*: Transtympanic Endoscopy of the Middle Ear. Laryngoscope, 102:993-996, 1992. [Context Link]

3. Poe, D.S.: Transtympanic Endoscopy of the Middle Ear. *Operative Tech Otolaryngol Head Neck Surg*, 3:239-244, 1992. [Context Link]

4. Cawthorne, T. and Cobb, W.A.: Temperature Changes in the Perilymph Space in Response to Caloric Stimulation in Man. *Acta Otolaryngol (Stockh)*. 44:580-588, 1954. [Context Link]

IMAGE GALLERY

Select All

Export Selected to PowerPoint

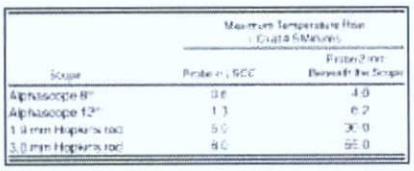

Table I

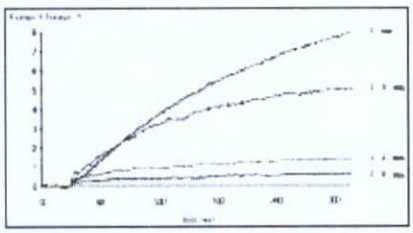

Fig. 1

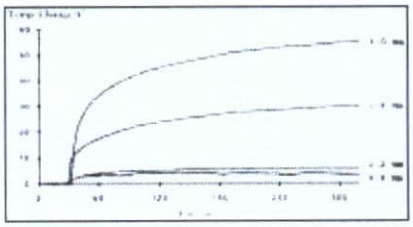

Fig. 2

Questions? Contact FDA/CDRH/OCE/DID at CDRH-FOISTATUS@fda.hhs.gov or 301-796-8118

Records processed under FOIA Request 2011-7654; Released 1/22/13

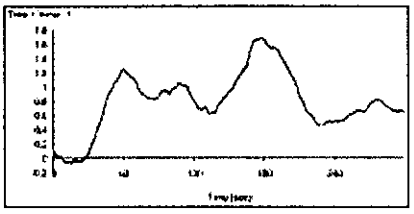

Fig. 3

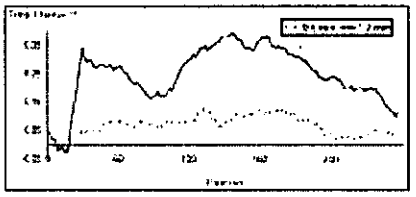

Fig. 4

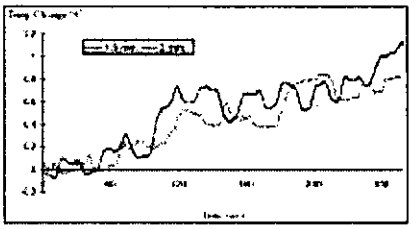

Fig. 5

Solution	Maximal Temperature (0.5°C)
Alpha 0.5*	5.0
Alpha 1.0*	0.25
Hypertonic 1.0	0.80
Hypertonic 3.0	1.10
NB: not recommendable	

Table II

Back to Top

| | Previous Article | Table of Contents | Next

Copyright (c) 2000-2010 Ovid Technologies, Inc.

| Terms of Use | Support & Training | About Us | Contact Us

Version: OvidSP_UI03.03.00.124, SourceID 53719

Questions? Contact FDA/CDRH/OCE/DID at CDRH-FOISTATUS@fda.hhs.gov or 301-796-8118

Records processed under FOIA Request 2011-7654; Released 1/22/13

Food and Drug Administration
Office of Device Evaluation &
Office of In Vitro Diagnostics

COVER SHEET MEMORANDUM

From: Reviewer Name — Susan Rudy CRNP

Subject: 510(k) Number — K110097/S1

To: The Record

Please list CTS decision code TH

☐ Refused to accept (Note: this is considered the first review cycle, See Screening Checklist http://eroom.fda.gov/eRoomReq/Files/CDRH3/CDRHPremarketNotification510kProgram/0_5631/Screening%20Checklist%207%202%2007.doc)

X Hold (Additional Information or Telephone Hold).

☐ Final Decision (SE, SE with Limitations, NSE, Withdrawn, etc.).

Please complete the following for a final clearance decision (i.e., SE, SE with Limitations, etc.):		YES	NO
Indications for Use Page	*Attach IFU*	✓	
510(k) Summary /510(k) Statement	*Attach Summary*		
Truthful and Accurate Statement.	*Must be present for a Final Decision*	✓	
Is the device Class III? If yes, does firm include Class III Summary?	*Must be present for a Final Decision*		✓
Does firm reference standards? (If yes, please attach form from http://www.fda.gov/opacom/morechoices/fdaforms/FDA-3654.pdf)		✓	
Is this a combination product? (Please specify category _____, see http://eroom.fda.gov/eRoomReq/Files/CDRH3/CDRHPremarketNotification510kProgram/0_413b/COMBINATION%20PRODUCT%20ALGORITHM%20(REVISED%203-12-03).DOC			✓
Is this a reprocessed single use device? (Guidance for Industry and FDA Staff – MDUFMA - Validation Data in 510(k)s for Reprocessed Single-Use Medical Devices, http://www.fda.gov/cdrh/ode/guidance/1216.html)			✓
Is this device intended for pediatric use only?			✓
Is this a prescription device? (If both prescription & OTC, check both boxes.)		✓	
Did the application include a completed FORM FDA 3674, Certification with Requirements of ClinicalTrials.gov Data Bank?			✓
Is clinical data necessary to support the review of this 510(k)? Did the application include a completed FORM FDA 3674, *Certification with Requirements of ClinicalTrials.gov Data Bank*? (If not, then applicant must be contacted to obtain completed form.)			✓
Does this device include an Animal Tissue Source?			✓
All Pediatric Patients age<=21			
Neonate/Newborn (Birth to 28 days)			
Infant (29 days -< 2 years old)			
Child (2 years -< 12 years old)			
Adolescent (12 years -< 18 years old)			
Transitional Adolescent A (18 - <21 years old) Special considerations are being given to this group, different from adults age ≥ 21 (different device design or testing, different protocol procedures, etc.)			

Rev. 7/2/07

Records processed under FOIA Request 2011-7654; Released 1/22/13

Transitional Adolescent B (18 -<= 21; No special considerations compared to adults => 21 years old)	
Nanotechnology	
Is this device subject to the Tracking Regulation? (Medical Device Tracking Guidance, http://www.fda.gov/cdrh/comp/guidance/169.html)	*Contact OC.*

Regulation Number	Class*	Product Code
21 CFR 874.4760	II	EOB

(*If unclassified, see 510(k) Staff)

Additional Product Codes: _____

Review: _____ ENTB 4/8/11
(Branch Chief) (Branch Code) (Date)

Final Review: _____
(Division Director) (Date)

Questions? Contact FDA/CDRH/OCE/DID at CDRH-FOISTATUS@fda.hhs.gov or 301-796-8118 202

Records processed under FOIA Request 2011-7654; Released 1/22/13

510(k) "SUBSTANTIAL EQUIVALENCE" DECISION-MAKING PROCESS

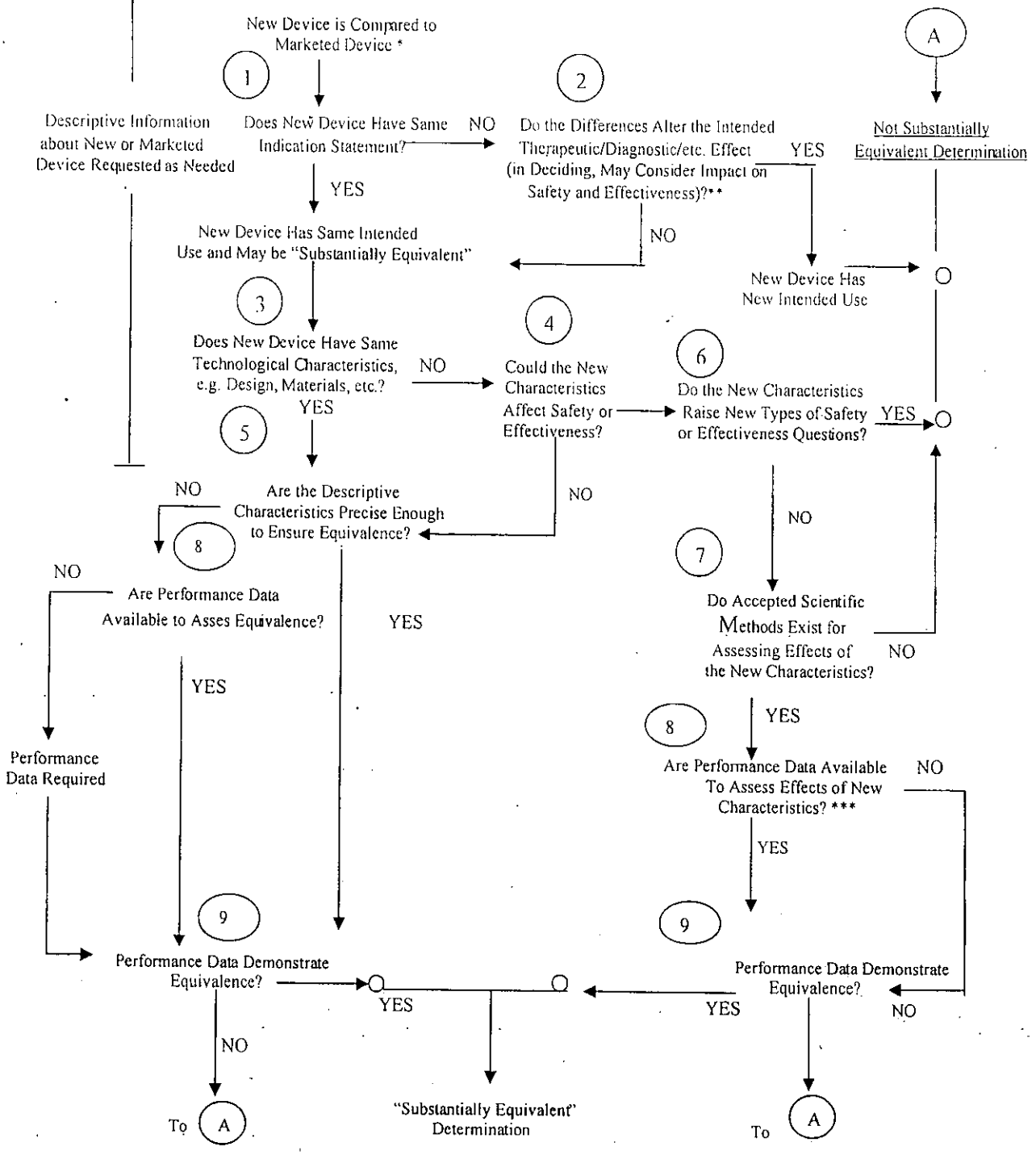

* 510(k) Submissions compare new devices to marketed devices. FDA requests additional information if the relationship between marketed and "predicate" (pre-Amendments or reclassified post-Amendments) devices is unclear.

** This decision is normally based on descriptive information alone, but limited testing information is sometimes required.

*** Data maybe in the 510(k), other 510(k)s, the Center's classification files, or the literature.

Questions? Contact FDA/CDRH/OCE/DID at CDRH-FOISTATUS@fda.hhs.gov or 301-796-8118

Records processed under FOIA Request 2011-7654; Released 1/22/13

Rudy, Susan

From: Rudy, Susan
Sent: Friday, April 08, 2011 3:50 PM
To: 'Yen, Keri [ACCUS]'
Cc: Nandkumar, Srinivas
Subject: K110097 / S001 Acclarent Cyclops Multiangle Endoscope Model CYE002 - Decision for telephone hold

Importance: High

Attachments: K110097 S001 Acclarent Cyclops MultiAngle Endoscope TH.pdf

K110097
Acclarent Cycl

Dear Ms. Yen-

(b) (4)

[redacted]

Susan F. Rudy, MSN, CRNP, CORLN
Nurse Consultant and Family Nurse Practitioner
FDA/CDRH/ODE/DONED
Ear, Nose & Throat Devices Branch
WO66 Rm 2574
10903 New Hampshire Ave.
Silver Spring, MD 20993
T: 301 796 6472
F: 301 827 4601
E: Susan.Rudy@fda.hhs.gov

HIS MESSAGE IS INTENDED ONLY FOR THE USE OF THE PARTY TO WHOM IT IS ADDRESSED AND MAY CONTAIN INFORMATION THAT IS PRIVILEGED, CONFIDENTIAL, AND PROTECTED FROM DISCLOSURE UNDER LAW. If you are not the addressee, or a person authorized to deliver the document to the addressee, you are hereby notified that any review disclosure, dissemination, copy or other action based on the content of this communication is not

Questions? Contact FDA/CDRH/OCE/DID at CDRH-FOISTATUS@fda.hhs.gov or 301-796-8118 204

authorized. If you have received this document in error please immediately notify us by e-mail or telephone.

Records processed under FOIA Request 2011-7654; Released 1/22/13

K110097 / S001 Acclarent Cyclops Multi-Angle Endoscope Model CYE002

Acclarent, Inc.
c/o Ms. Keri Yen, Regulatory Affairs Manager
1525-B O'Brien Dr.
Menlo Park, CA 94025
Kyen1@ITS.JNJ.com

Re: K110097/S1
Trade Name: Acclarent Cyclops Multi-Angle Endoscope Model CYE002
Dated: March 11, 2011
Received: March 14, 2011

Dear Ms. Yen:

(b) (4)

[redacted]

Questions? Contact FDA/CDRH/OCE/DID at CDRH-FOISTATUS@fda.hhs.gov or 301-796-8118

Records processed under FOIA Request 2011-7654; Released 1/22/13

(b) (4)

[redacted]

U.S. Food and Drug Administration
Center for Devices and Radiological Heath
Document Mail Center – WO66-0609
10903 New Hampshire Avenue
Silver Spring, MD 20993-0002

Questions? Contact FDA/CDRH/OCE/DID at CDRH-FOISTATUS@fda.hhs.gov or 301-796-8118

Records processed under FOIA Request 2011-7654; Released 1/22/13

(b) (4)

[redacted]

Questions? Contact FDA/CDRH/OCE/DID at CDRH-FOISTATUS@fda.hhs.gov or 301-796-8118

Records processed under FOIA Request 2011-7654; Released 1/22/13

SPECIAL 510(k): Device Modification
ODE Review Memorandum (Decision Making Document is Attached)

To: THE FILE **RE:** DOCUMENT NUMBER K____110097 / S001_
Acclarent Cyclops Multi-Angle Endoscope Model CYE002

This 510(k) submission contains information/data on modifications made to the SUBMITTER'S own Class II, Class III or Class I devices requiring 510(k). The following items are present and acceptable (delete/add items as necessary):

1. The name and 510(k) number of the SUBMITTER'S previously cleared device. (For a preamendments device, a statement to this effect has been provided.)
2. Submitter's statement that the **INDICATION/INTENDED USE** of the modified device as described in its labeling **HAS NOT CHANGED** along with the proposed labeling which includes instructions for use, package labeling, and, if available, advertisements or promotional materials (labeling changes are permitted as long as they do not affect the intended use).

Indications for use and labeling are SE as of S001.

3. A description of the device **MODIFICATION(S),** including clearly labeled diagrams, engineering drawings, photographs, user's and/or service manuals in sufficient detail to demonstrate that the **FUNDAMENTAL SCIENTIFIC TECHNOLOGY** of the modified device **has not changed.**

(b) (4)

[redacted]

4. **Comparison Information** (similarities and differences) to applicant's legally marketed predicate device including, labeling, intended use, physical characteristics, and _____

5. A **Design Control Activities Summary** which includes:

(b) (4)

[redacted]

Records processed under FOIA Request 2011-7654; Released 1/22/13

(b) (4)

[redacted]

6. A **Truthful and Accurate Statement**, a **510(k) Summary or Statement** and the **Indications for Use Enclosure (and Class III Summary for Class III devices).**

The labeling for this modified subject device has been reviewed to verify that the indication/intended use for the device is unaffected by the modification. In addition, the submitter's description of the particular modification(s) and the comparative information between the modified and unmodified devices demonstrate that the fundamental scientific technology has not changed. The submitter has provided the design control information as specified in The New 510(k) Paradigm and on this basis, I recommend the device be determined substantially equivalent to the previously cleared (or their preamendment) device.

(b) (4)

[redacted]

Susan Ruby CRNP (Reviewer's Signature) 4-7-2011 (Date)

Comments

See thermal safety deficiency

See deficiencies

revised:8/1/03

"SUBSTANTIAL EQUIVALENCE" (SE) DECISION MAKING DOCUMENTATION

S.N. 4/8/11

Questions? Contact FDA/CDRH/OCE/DID at CDRH-FOISTATUS@fda.hhs.gov or 301-796-8118 210

Records processed under FOIA Request 2011-7654; Released 1/22/13

	Yes	No	
1. Same Indication Statement?	X		If **YES** = Go To 3
2. Do Differences Alter The Effect Or Raise New Issues of Safety Or Effectiveness?			If **YES** = Stop **NSE**
3. Same Technological Characteristics?	X		If **YES** = Go To 5
4. Could The New Characteristics Affect Safety Or Effectiveness?			If **YES** = Go To 6
5. Descriptive Characteristics Precise Enough?		X	If **NO** = Go To 8 If **YES** = Stop **SE**
6. New Types Of Safety Or Effectiveness Questions?			If **YES** = Stop **NSE**
7. Accepted Scientific Methods Exist?			If **NO** = Stop **NSE**
8. Performance Data Available?	X		If **NO** = Request Data
9. Data Demonstrate Equivalence?		X	Final Decision:

Note: See http://eroom.fda.gov/eRoomReq/Files/CDRH3/CDRHPremarketNotification510kProgram/0_4148/FLOWCHART%20DECISION%20TREE%20.DOC for Flowchart to assist in decision-making process. Please complete the following table and answer the corresponding questions. "Yes" responses to questions 2, 4, 6, and 9, and every "no" response requires an explanation.

1. Explain how the new indication differs from the predicate device's indication: Same

2. Explain why there is or is not a new effect or safety or effectiveness issue: NA

3. Describe the new technological characteristics: Only minor changes to materials, directions / angles of view, external endoscope markings, and with a lower magnet strength.

4. Explain how new characteristics could or could not affect safety or effectiveness:
Thermal properties are much hotter and of concern for patient and staff safety.

5. Explain how descriptive characteristics are not precise enough:
Modified endoscope is hotter than predicate and there is insufficient justification for the hotter temperatures.

6. Explain new types of safety or effectiveness question(s) raised or why the question(s) are not new: NA

7. Explain why existing scientific methods can not be used: NA

8. Explain what performance data is needed: Thermal safety testing compared to a cleared endoscope with product code EOB or literature based justification for the temperatures achieved as safe.

9. Explain how the performance data demonstrates that the device is or is not substantially equivalent:

Pending response to thermal safety deficiency.

See also TH / AI Deficiency Letter.

Questions? Contact FDA/CDRH/OCE/DID at CDRH-FOISTATUS@fda.hhs.gov or 301-796-8118 211

Records processed under FOIA Request 2011-7654; Released 1/22/13

DEPARTMENT OF HEALTH & HUMAN SERVICES

Food and Drug Administration
ODE / DONED / ENTB
WO66 Rm 2574
10903 New Hampshire Avenue
Silver Spring, MD 20993-0002

TO: **The Record**

FROM: Susan Rudy, MSN, CRNP, CORLN S. Rudy CRNP 4/7/2011
Nurse Consultant and Family Nurse Practitioner, ENTB

DATE: 4/7/2011

RE: **K110097 Acclarent Cyclops Multi-Angle Endoscope Model CYE002**
Clinical, Labeling & Sterility review for Special 510(k)

RECOMMENDATION: TH

HISTORY

(b) (4)

[redacted]

Questions? Contact FDA/CDRH/OCE/DID at CDRH-FOISTATUS@fda.hhs.gov or 301-796-8118 212

Records processed under FOIA Request 2011-7654; Released 1/22/13

(b) (4)

[redacted]

CLINICAL REVIEW

(b) (4)

[redacted]

Questions? Contact FDA/CDRH/OCE/DID at CDRH-FOISTATUS@fda.hhs.gov or 301-796-8118 213

Records processed under FOIA Request 2011-7654; Released 1/22/13

(b) (4)

[redacted]

Questions? Contact FDA/CDRH/OCE/DID at CDRH-FOISTATUS@fda.hhs.gov or 301-796-8118
214

Records processed under FOIA Request 2011-7654; Released 1/22/13

(b) (4)

[redacted]

(b) (4)

[redacted]

Questions? Contact FDA/CDRH/OCE/DID at CDRH-FOISTATUS@fda.hhs.gov or 301-796-8118

Records processed under FOIA Request 2011-7654; Released 1/22/13

(b) (4)

[redacted]

Questions? Contact FDA/CDRH/OCE/DID at CDRH-FOISTATUS@fda.hhs.gov or 301-796-8118 216

Records processed under FOIA Request 2011-7654; Released 1/22/13

(b) (4)

[redacted]

Questions? Contact FDA/CDRH/OCE/DID at CDRH-FOISTATUS@fda.hhs.gov or 301-796-8118

217

Records processed under FOIA Request 2011-7654; Released 1/22/13

Intertek Comparative Testing

(b) (4)

[redacted]

Questions? Contact FDA/CDRH/OCE/DID at CDRH-FOISTATUS@fda.hhs.gov or 301-796-8118 218

Records processed under FOIA Request 2011-7654; Released 1/22/13

(b) (4)

[redacted]

Questions? Contact FDA/CDRH/OCE/DID at CDRH-FOISTATUS@fda.hhs.gov or 301-796-8118

Records processed under FOIA Request 2011-7654; Released 1/22/13

(b) (4)

[redacted]

LABELING REVIEW:

(b) (4)

[redacted]

Questions? Contact FDA/CDRH/OCE/DID at CDRH-FOISTATUS@fda.hhs.gov or 301-796-8118 226

Records processed under FOIA Request 2011-7654; Released 1/22/13

(b) (4)

[redacted]

Standards / Guidances Utilized

Questions? Contact FDA/CDRH/OCE/DID at CDRH-FOISTATUS@fda.hhs.gov or 301-796-8118

Records processed under FOIA Request 2011-7654; Released 1/22/13

Standard / Guidance	Cited in FDA 3514 form	FDA Form 3654 – declaration of conformance to the standard

(b) (4)

[redacted]

STERILITY REVIEW

(b) (4)

[redacted]

Questions? Contact FDA/CDRH/OCE/DID at CDRH-FOISTATUS@fda.hhs.gov or 301-796-8118 222

Records processed under FOIA Request 2011-7654; Released 1/22/13

(b) (4)

[redacted]

(b) (4)

[redacted]

Questions? Contact FDA/CDRH/OCE/DID at CDRH-FOISTATUS@fda.hhs.gov or 301-796-8118

Records processed under FOIA Request 2011-7654; Released 1/22/13

(b) (4)

(b) (4)

Test article for K100577	Mcg / test article	Net mcg / mL

(b) (4)

Results for K110097 are below:

(b) (4)

Questions? Contact FDA/CDRH/OCE/DID at CDRH-FOISTATUS@fda.hhs.gov or 301-796-8118

Records processed under FOIA Request 2011-7654; Released 1/22/13

(b) (4)

[redacted]

(b) (4)

[redacted]

The Subject Device is SE to the predicate on the cleaning validation in S001.

Reviewer summary continued:

(b) (4)

[redacted]

From: Rudy, Susan [mailto:Susan.Rudy@fda.hhs.gov]
Sent: Sunday, January 23, 2011 1:11 PM
To: Yen, Keri [ACCUS]
Subject: K110097 Acclarent Cyclops Multiangle Endoscope

Dear Ms. Yen-

Questions? Contact FDA/CDRH/OCE/DID at CDRH-FOISTATUS@fda.hhs.gov or 301-796-8118

Records processed under FOIA Request 2011-7654; Released 1/22/13

(b) (4)

[redacted]

Thank you in advance!

Susan F. Rudy, MSN, CRNP, CORLN, OCN
Nurse Consultant and Family Nurse Practitioner
FDA/CDRH/ODE/DONED

I received the response below by e-mail on 1/24/2011.

Hi Ms. Rudy,

(b) (4)

[redacted]

Questions? Contact FDA/CDRH/OCE/DID at CDRH-FOISTATUS@fda.hhs.gov or 301-796-8118

226

Records processed under FOIA Request 2011-7654; Released 1/22/13

(b) (4)

[redacted]

Regards,
Keri

(b) (4)

[redacted]

END OF REVIEW

Recommendation: TH

Suggested Deficiency:

(b) (4)

[redacted]

Questions? Contact FDA/CDRH/OCE/DID at CDRH-FOISTATUS@fda.hhs.gov or 301-796-8118

227

Records processed under FOIA Request 2011-7654; Released 1/22/13

K110097/S001 – Materials Science and Engineering Review

To: Susan Rudy, MSN, CRNP, CORLN
Team Leader, DONED/ENTB

From: Daniel C. Clupper, Ph.D.
Biomedical Engineer, DONED/ENTB

Date: April 7, 2011

Device: Cyclops modification (Acclarent, Inc.)

Background

The following modifications have been made to the Acclarent Cyclops Multi-Angle Endoscope to improve manufacturability and device usability:

(b) (4)

[redacted]

Questions? Contact FDA/CDRH/OCE/DID at CDRH-FOISTATUS@fda.hhs.gov or 301-796-8118

228

Records processed under FOIA Request 2011-7654; Released 1/22/13

(b) (4)

[redacted]

Questions? Contact FDA/CDRH/OCE/DID at CDRH-FOISTATUS@fda.hhs.gov or 301-796-8118

229

Records processed under FOIA Request 2011-7654; Released 1/22/13

(b) (4)

[redacted]

Questions? Contact FDA/CDRH/OCE/DID at CDRH-FOISTATUS@fda.hhs.gov or 301-796-8118

Records processed under FOIA Request 2011-7654; Released 1/22/13

(b) (4)

[redacted]

Questions? Contact FDA/CDRH/OCE/DID at CDRH-FOISTATUS@fda.hhs.gov or 301-796-8118

231

(b) (4)

[redacted]

Questions? Contact FDA/CDRH/OCE/DID at CDRH-FOISTATUS@fda.hhs.gov or 301-796-8118

232

Records processed under FOIA Request 2011-7654; Released 1/22/13

(b) (4)

[redacted]

Questions? Contact FDA/CDRH/OCE/DID at CDRH-FOISTATUS@fda.hhs.gov or 301-796-8118

Records processed under FOIA Request 2011-7654; Released 1/22/13

(b) (4)

[redacted]

Questions? Contact FDA/CDRH/OCE/DID at CDRH-FOISTATUS@fda.hhs.gov or 301-796-8118

(b) (4)

[redacted]

Questions? Contact FDA/CDRH/OCE/DID at CDRH-FOISTATUS@fda.hhs.gov or 301-796-8118

(b)(4) Risk Management Report

(b)(4) Risk Management Report

(b)(4) Risk Management Report

(b)(4) Risk Management Report

(b)(4) Risk Management Report

(b)(4) Review

(b)(4) Review

(b)(4) Review

(b)(4) Review

(b)(4) Review

(b)(4) Review

(b)(4) Review

(b)(4) Review

(b)(4) Review

(b)(4) Review

Rudy, Susan

From: Rudy, Susan
Sent: Tuesday, April 05, 2011 8:08 AM
To: 'Yen, Keri [ACCUS]'
Subject: RE: K110097: (b) (4) [redacted]

So noted.

Susan ("Sue") Rudy, MSN, CRNP, CORLN
Nurse Consultant & Family Nurse Practitioner
FDA/CDRH/ODE/DONED/ENTB
T: 301 796 6472

From: Yen, Keri [ACCUS] [mailto:KYen1@ITS.JNJ.com]
Sent: Monday, April 04, 2011 9:41 PM
To: Rudy, Susan
Subject: RE: K110097: (b) (4) [redacted]

(b) (4) [redacted]

Keri

From: Rudy, Susan [mailto:Susan.Rudy@fda.hhs.gov]
Sent: Monday, April 04, 2011 6:31 PM
To: Yen, Keri [ACCUS]
Cc: Nandkumar, Srinivas
Subject: RE: K110097: (b) (4) [redacted]

(b) (4) [redacted]

Susan ("Sue") Rudy, MSN, CRNP, CORLN
Nurse Consultant & Family Nurse Practitioner
FDA/CDRH/ODE/DONED/ENTB

T: 301 796 6472

From: Yen, Keri [ACCUS] [mailto:KYen1@ITS.JNJ.com]
Sent: Monday, April 04, 2011 9:00 PM
To: Rudy, Susan
Cc: Nandkumar, Srinivas
Subject: K110097: (b) (4) [redacted]

Hi Ms. Rudy,

(b) (4) [redacted]

Keri

Keri Yen
Manager, Regulatory Affairs & Clinical
Acclarent, Inc.
1525-B O'Brien Drive
Menlo Park, CA 94025
650.687.5874 office
650.687.5889 fax

www.acclarent.com

*This e-mail transmission including any attachments or previous e-mails is intended for the addressee only and may contain information that is **confidential and/or privileged.** Unless you are the addressee (or are authorized to receive this e-mail for the addressee), you may not use, copy, or disclose this e-mail or any information contained in this e-mail. If you have received this e-mail in error, please advise Acclarent, Inc. by return e-mail or telephone (650)687-5888.*

Rudy, Susan

From: Yen, Keri [ACCUS] [KYen1@ITS.JNJ.com]
Sent: Wednesday, March 30, 2011 1:20 AM
To: Rudy, Susan
Cc: Nandkumar, Srinivas
Subject: RE: K110097 (b) (4) [redacted]
Follow Up Flag: Follow up
Flag Status: Red
Attachments: Response to 3-29-11 query.pdf

Hi Ms. Rudy,

Thank you for your interactive review.

Please find our response to your queries in the attached document.

Let us know if you have any additional questions.

Thank you.

Keri

From: Rudy, Susan [mailto:Susan.Rudy@fda.hhs.gov]
Sent: Tuesday, March 29, 2011 10:39 AM
To: Yen, Keri [ACCUS]
Cc: Nandkumar, Srinivas
Subject: RE: K110097 (b) (4) [redacted]

Keri-

(b) (4) [redacted]

Susan ("Sue") Rudy, MSN, CRNP, CORLN
Nurse Consultant & Family Nurse Practitioner
FDA/CDRH/ODE/DONED/ENTB
T: 301 796 6472

---

ch 29, 2011 1:32 PM
:US]'
inivas
)7 S001 Acclarent Cyclops Gen 2 query
I

Dear Ms. Yen-

(b) (4)

[redacted]

Thank you in advance.

Susan F. Rudy, MSN, CRNP, CORLN
Nurse Consultant and Family Nurse Practitioner
FDA/CDRH/ODE/DONED
Ear, Nose & Throat Devices Branch
WO66 Rm 2574
10903 New Hampshire Ave.
Silver Spring, MD 20993
T: 301 796 6472
F: 301 827 4601
E: Susan.Rudy@fda.hhs.gov

(b)(4) Testing

(b)(4) Testing

Rudy, Susan

From: Rudy, Susan
Sent: Tuesday, March 29, 2011 8:57 AM
To: 'Yen, Keri [ACCUS]'
Subject: RE: K110097 / (b)(4) Testing [redacted]

(b)(4) Testing [redacted]

Susan ("Sue") Rudy, MSN, CRNP, CORLN
Nurse Consultant & Family Nurse Practitioner
FDA/CDRH/ODE/DONED/ENTB
T: 301 796 6472

From: Yen, Keri [ACCUS] [mailto:KYen1@ITS.JNJ.com]
Sent: Monday, March 28, 2011 5:39 PM
To: Rudy, Susan
Subject: RE: K110097 / (b)(4) Testing [redacted]

Good afternoon Ms. Rudy,

(b)(4) Testing [redacted]

Thanks.

Keri

From: Rudy, Susan [mailto:Susan.Rudy@fda.hhs.gov]
Sent: Monday, March 28, 2011 1:23 PM
To: Yen, Keri [ACCUS]
Subject: K110097 / (b)(4) Testing [redacted]
Importance: High

Dear Ms. Yen-

(b)(4) Testing [redacted]

(b)(4) Testing

[redacted]

Susan F. Rudy, MSN, CRNP, CORLN
Nurse Consultant and Family Nurse Practitioner
FDA/CDRH/ODE/DONED
Ear, Nose & Throat Devices Branch
WO66 Rm 2574
10903 New Hampshire Ave.
Silver Spring, MD 20993
T: 301 796 6472
F: 301 827 4601
E: Susan.Rudy@fda.hhs.gov

(b)(4) Validation Report

(b)(4) Validation Report

Rudy, Susan

From: Yen, Keri [ACCUS] [KYen1@ITS.JNJ.com]
Sent: Monday, March 28, 2011 11:34 AM
To: Rudy, Susan
Cc: Bishop, Mark [ACCUS]; Clupper, Daniel C
Subject: FW: K110097 / S001 Acclarent Cyclops thermal safety
Attachments: Storz Instruction Manual_relevant page.pdf; K935279.pdf

Hi Ms. Rudy,

(b) (4)

[redacted]

Thank you.

Keri

From: Bishop, Mark [ACCUS]
Sent: Friday, March 18, 2011 12:14 PM
To: Rudy, Susan
Cc: Yen, Keri [ACCUS]
Subject: RE: K110097 / S001 Acclarent Cyclops thermal safety

Dear Ms Rudy,

(b) (4)

[redacted]

Regards,

Mark

Mark Bishop
VP RA/QA
Acclarent, Inc.

Questions? Contact FDA/CDRH/OCE/DID at CDRH-FOISTATUS@fda.hhs.gov or 301-796-8118

Records processed under FOIA Request 2011-7654; Released 1/22/13

K110097/S1/A1
3/28/2011

DEPARTMENT OF HEALTH & HUMAN SERVICES

Public Health Service

Food and Drug Administration
1390 Piccard Drive
Rockville MD 20850

SEP 12 1994

Ms. Susie S. Chen
Administrator, Legal and Regulatory Affairs
Karl Storz Endoscopy-America, Inc.
Representing Hogan & Hartson
600 Corporate Pointe
Culver City, California 90230-7600

RECEIVED
SEP 19 1994

Re: K935279
Karl Storz Hopkins I and II Rigid Autoclavable Telescopes
Regulatory Class: II
Product Code: GCJ
Dated: June 6, 1994
Received: June 7, 1994

Dear Ms. Chen:

We have reviewed your Section 510(k) notification of intent to market the device referenced above and we have determined the device is substantially equivalent to devices marketed in interstate commerce prior to May 28, 1976, the enactment date of the Medical Device Amendments, or to devices that have been reclassified in accordance with the provisions of the Federal Food, Drug, and Cosmetic Act (Act). You may, therefore, market the device, subject to the general controls provisions of the Act. The general controls provisions of the Act include requirements for annual registration, listing of devices, good manufacturing practice, labeling, and prohibitions against misbranding and adulteration.

If your device is classified (see above) into either class II (Special Controls) or class III (Premarket Approval) it may be subject to such additional controls. Existing major regulations affecting your device can be found in the Code of Federal Regulations, Title 21, Parts 800 to 895. A substantially equivalent determination assumes compliance with the Good Manufacturing Practice for Medical Devices: General (GMP) regulation (21 CFR Part 820) and that, through periodic GMP inspections, the Food and Drug Administration (FDA) will verify such assumptions. Failure to comply with the GMP regulation may result in regulatory action. In addition, FDA may publish further announcements concerning your device in the Federal Register. Please note: this response to your premarket notification submission does not affect any obligation you might have under sections 531 through 542 of the Act for devices under the Electronic Product Radiation Control provisions, or other Federal Laws or Regulations.

Questions? Contact FDA/CDRH/OCE/DID at CDRH-FOISTATUS@fda.hhs.gov or 301-796-8118

Records processed under FOIA Request 2011-7654; Released 1/22/13

K110097/S1/A1
3/28/2011

This letter immediately will allow you to begin marketing your device as described in your 510(k) premarket notification. An FDA finding of substantial equivalence of your device to a legally marketed predicate device results in a classification for your device and permits your device to proceed to the market, but it does not mean that FDA approves your device. Therefore, you may not promote or in any way represent your device or its labeling as being approved by FDA. If you desire specific advice for your device on our labeling regulation (21 CFR Part 801 and additionally 809.10 for in vitro diagnostic devices), promotion, or advertising please contact the Office of Compliance, Promotion and Advertising Policy Staff (HFZ-300) at (301) 594-4639. Other general information on your responsibilities under the Act may be obtained from the Division of Small Manufacturers Assistance at their toll free number (800) 638-2041 or at (301) 443-6597.

Sincerely yours,

Paul R. Beninger, M.D.
Director
Division of General and
Restorative Devices
Office of Device Evaluation
Center for Devices and
Radiological Health

Questions? Contact FDA/CDRH/OCE/DID at CDRH-FOISTATUS@fda.hhs.gov or 301-796-8118

Records processed under FOIA Request 2011-7654; Released 1/22/13

K110097/S1/A1
3/28/2011

STORZ
KARL STORZ ENDOSCOPY

Appendix I

Urology

Indications for Use: The Karl Storz HOPKINS® and HOPKINS® II Telescopes are to be used for visualization of the surgical site during diagnostic and therapeutic urology procedures.

Contraindications: The Karl Storz HOPKINS® and HOPKINS® II Telescopes are contraindicated for use when, in the opinion of a qualified physician, such use would create a condition that would be dangerous for the patient.

General Surgery

Indications for Use: The Karl Storz HOPKINS® and HOPKINS® II Telescopes are for use during general endoscopic and laparoscopic surgical procedures (diagnostic and therapeutic).

Contraindications: The Karl Storz HOPKINS® and HOPKINS® II Telescopes are contraindicated for use when, in the opinion of a qualified physician, such use would create a condition that would be dangerous for the patient.

Thoracoscopy

Indications for Use: The Karl Storz HOPKINS® and HOPKINS® II Telescopes are for use to view the thoracic cavity during diagnostic and operative endoscopic procedures.

Contraindications: The Karl Storz HOPKINS® and HOPKINS® II Telescopes are contraindicated for use when, in the opinion of a qualified physician, such use would create a condition that would be dangerous for the patient.

STORZ
KARL STORZ ENDOSCOPY

Appendix I (Continued)

Ear, Nose and Throat

Indications for Use: The Karl Storz HOPKINS® and HOPKINS® II Telescopes are for use to view the nasal, sinus and/or pharyngeal cavities during diagnostic and operative endoscopic procedures.

The Karl Storz HOPKINS® and HOPKINS® II Telescopes are for use to view the bronchi, trachea and esophagus during diagnostic and operative endoscopic procedures.

The Karl Storz HOPKINS® and HOPKINS® II Telescopes are for use to view the tympanic membrane and middle ear during diagnostic and operative endoscopic procedures.

The Karl Storz HOPKINS® and HOPKINS® II Telescopes are for use to view the larynx during diagnostic and operative endoscopic procedures.

Contraindications: The Karl Storz HOPKINS® and HOPKINS® II Telescopes are contraindicated for use when, in the opinion of a qualified physician, such use would create a condition that would be dangerous for the patient.

Arthroscopy

Indications for Use: The Karl Storz HOPKINS® and HOPKINS® II Telescopes are for use during diagnostic and therapeutic arthroscopic surgical procedures in the knee, shoulder, elbow, wrist, ankle, jaw and hip.

Contraindications: The Karl Storz HOPKINS® and HOPKINS® II Telescopes are contraindicated for use when, in the opinion of a qualified physician, such use would create a condition that would be dangerous for the patient.

Plastic Surgery

Indications for Use: The Karl Storz HOPKINS® and HOPKINS® II Telescopes are for use during endoscopic plastic, reconstructive and aesthetic surgical procedures.

Contraindications: The Karl Storz HOPKINS® and HOPKINS® II Telescopes are contraindicated for use when, in the opinion of a qualified physician, such use would create a condition that would be dangerous for the patient.

264

Questions? Contact FDA/CDRH/OCE/DID at CDRH-FOISTATUS@fda.hhs.gov or 301-796-8118

Rudy, Susan

From: Yen, Keri [ACCUS] [KYen1@ITS.JNJ.com]
Sent: Monday, March 28, 2011 12:29 PM
To: Rudy, Susan
Subject: RE: K110097 / (b) (4) [redacted]
Attachments: Acclarent response to 03-24-11 query.pdf

Hello Ms. Rudy,

(b) (4) [redacted]

Thank you.

Keri

From: Rudy, Susan [mailto:Susan.Rudy@fda.hhs.gov]
Sent: Thursday, March 24, 2011 2:03 PM
To: Yen, Keri [ACCUS]
Subject: K110097 / (b) (4) [redacted]
Importance: High

Dear Ms. Yen-

(b) (4) [redacted]

Thanks very much!

Susan F. Rudy, MSN, CRNP, CORLN
Nurse Consultant and Family Nurse Practitioner
FDA/CDRH/ODE/DONED
Ear, Nose & Throat Devices Branch
WO66 Rm 2574
10903 New Hampshire Ave.
Silver Spring, MD 20993
T: 301 796 6472
F: 301 827 4601
E: Susan.Rudy@fda.hhs.gov

Records processed under FOIA Request 2011-7654; Released 1/22/13

K110097/S1/A1
3/28/2011

(b) (4)

[redacted]

Questions? Contact FDA/CDRH/OCE/DID at CDRH-FOISTATUS@fda.hhs.gov or 301-796-8118

267

Records processed under FOIA Request 2011-7654; Released 1/22/13

K110097/S1/A2
3/28/2011

No.	Soiled?	Pre-Cleaning Method	Test Description	Serial Numbers (CEA-)
(b) (4) [redacted]				(b) (4) [redacted]

Questions? Contact FDA/CDRH/OCE/DID at CDRH-FOISTATUS@fda.hhs.gov or 301-796-8118

Records processed under FOIA Request 2011-7654; Released 1/22/13

(b) (4)

[redacted]

Questions? Contact FDA/CDRH/OCE/DID at CDRH-FOISTATUS@fda.hhs.gov or 301-796-8118

Rudy, Susan

From: Bishop, Mark [ACCUS] [MBishop1@ITS.JNJ.com]
Sent: Thursday, March 17, 2011 6:49 PM
To: Rudy, Susan
Cc: Yen, Keri [ACCUS]
Subject: RE: K110097 / S001 Acclarent Cyclops thermal safety
Follow Up Flag: Follow up
Flag Status: Red

Dear Ms Rudy,

We have received your query and please look forward to our response by this afternoon.

Regards,

Mark Bishop
VP RA/QA
Acclarent, Inc.

From: Rudy, Susan [mailto:Susan.Rudy@fda.hhs.gov]
Sent: Wednesday, March 16, 2011 1:56 PM
To: Bishop, Mark [ACCUS]
Cc: Yen, Keri [ACCUS]
Subject: FW: K110097 / S001 Acclarent Cyclops thermal safety
Importance: High

Dear Mr. Bishop -

Please see our query below...

Susan ("Sue") Rudy, MSN, CRNP, CORLN
Nurse Consultant & Family Nurse Practitioner
FDA/CDRH/ODE/DONED/ENTB
T: 301 796 6472

---

larch 16, 2011 4:54 PM
:US]'
inivas; Clupper, Daniel C
)7 / S001 Acclarent Cyclops thermal safety
I

Dear Ms. Yen-

Records processed under FOIA Request 2011-7654; Released 1/22/13

(b) (4)

[redacted]

Susan F. Rudy, MSN, CRNP, CORLN
Nurse Consultant and Family Nurse Practitioner
FDA/CDRH/ODE/DONED
Ear, Nose & Throat Devices Branch
WO66 Rm 2574
10903 New Hampshire Ave.
Silver Spring, MD 20993
T: 301 796 6472
F: 301 827 4601
E: Susan.Rudy@fda.hhs.gov

Questions? Contact FDA/CDRH/OCE/DID at CDRH-FOISTATUS@fda.hhs.gov or 301-796-8118

(b)(4) Testing Data

(b)(4) Testing Data

(b)(4) Testing Data

(b)(4) Testing Data

(b)(4) Testing Data

(b)(4) Testing Data

(b)(4) Testing Data

Rudy, Susan

From: Rudy, Susan
Sent: Friday, March 04, 2011 6:58 PM
To: 'Yen, Keri [ACCUS]'
Subject: RE: K110097 FDA responses to Acclarent Clarification Questions

Thank you!

(b) (4)

Susan ("Sue") Rudy, MSN, CRNP, CORLN
Nurse Consultant & Family Nurse Practitioner
FDA/CDRH/ODE/DONED/ENTB
T: 301 796 6472

From: Yen, Keri [ACCUS] [mailto:KYen1@ITS.JNJ.com]
Sent: Friday, March 04, 2011 6:19 PM
To: Rudy, Susan
Cc: Su-Mien Chong
Subject: RE: K110097 FDA responses to Acclarent Clarification Questions

Hi Ms. Rudy,

(b) (4)

Keri

From: Rudy, Susan [mailto:Susan.Rudy@fda.hhs.gov]
Sent: Friday, March 04, 2011 8:10 AM
To: Yen, Keri [ACCUS]
Subject: RE: K110097 FDA responses to Acclarent Clarification Questions

Importance: High

Dear Ms. Yen-

(b) (4)

[redacted]

(b) (4)

Susan ("Sue") Rudy, MSN, CRNP, CORLN
Nurse Consultant & Family Nurse Practitioner
FDA/CDRH/ODE/DONED/ENTB
T: 301 796 6472

From: Yen, Keri [ACCUS] [mailto:KYen1@ITS.JNJ.com]
Sent: Wednesday, March 02, 2011 12:34 PM
To: Rudy, Susan; Nandkumar, Srinivas
Subject: RE: K110097 Clarification Questions

Hi Ms. Rudy,

(b) (4)

Keri

From: Rudy, Susan [mailto:Susan.Rudy@fda.hhs.gov]

Sent: Wednesday, March 02, 2011 9:30 AM
To: Yen, Keri [ACCUS]; Nandkumar, Srinivas
Subject: RE: K110097 Clarification Questions

Dear Ms. Yen-

(b) (4)

Susan ("Sue") Rudy, MSN, CRNP, CORLN
Nurse Consultant & Family Nurse Practitioner
FDA/CDRH/ODE/DONED/ENTB
T: 301 796 6472

From: Yen, Keri [ACCUS] [mailto:KYen1@ITS.JNJ.com]
Sent: Wednesday, March 02, 2011 11:38 AM
To: Rudy, Susan; Nandkumar, Srinivas
Subject: RE: K110097 Clarification Questions

(b) (4)

Regards,

Keri

From: Rudy, Susan [mailto:Susan.Rudy@fda.hhs.gov]
Sent: Tuesday, March 01, 2011 2:08 PM
To: Yen, Keri [ACCUS]; Nandkumar, Srinivas
Subject: RE: K110097 Clarification Questions

Received...

Susan ("Sue") Rudy, MSN, CRNP, CORLN
Nurse Consultant & Family Nurse Practitioner
FDA/CDRH/ODE/DONED/ENTB
T: 301 796 6472

From: Yen, Keri [ACCUS] [mailto:KYen1@ITS.JNJ.com]

Sent: Monday, February 28, 2011 10:30 PM
To: Nandkumar, Srinivas
Cc: Rudy, Susan
Subject: K110097 Clarification Questions

Hi Dr. Nandkumar,

(b) (4)

[redacted]

Keri

Keri Yen
Manager, Regulatory Affairs & Clinical
Acclarent, Inc.
1525-B O'Brien Drive
Menlo Park, CA 94025
650.687.5874 office
650.687.5889 fax

www.acclarent.com

*This e-mail transmission including any attachments or previous e-mails is intended for the addressee only and may contain information that is **confidential and/or privileged**. Unless you are the addressee (or are authorized to receive this e-mail for the addressee), you may not use, copy, or disclose this e-mail or any information contained in this e-mail. If you have received this e-mail in error, please advise Acclarent, Inc. by return e-mail or telephone (650)687-5888.*

Rudy, Susan

From: Yen, Keri [ACCUS] [KYen1@ITS.JNJ.com]
Sent: Friday, February 25, 2011 2:53 PM
To: Page, Attallah
Cc: Rudy, Susan
Subject: RE: Telecon

Hi Ms. Page,

Yes, that time will work for us. Please provide me with the dial-in information.

Thank you.

Have a great weekend,
Keri

From: Page, Attallah [mailto:Attallah.Page@fda.hhs.gov]
Sent: Friday, February 25, 2011 7:15 AM
To: Yen, Keri [ACCUS]
Cc: Rudy, Susan
Subject: Telecon

Good Morning,

(b) (4)

[redacted]

Thank you,

Attallah Page

Division of Ophthalmic, Neurological,
and ENT Devices
Office of Device Evaluation
Center for Devices and Radiological Health
Food and Drug Administration
10903 New Hampshire Avenue
WO66 RM 2403
Silver Spring, MD 20993
301.796.5623

Records processed under FOIA Request 2011-7654; Released 1/22/13

Rudy, Susan

From: Yen, Keri [ACCUS] [KYen1@ITS.JNJ.com]
Sent: Friday, February 18, 2011 8:32 PM
To: Rudy, Susan; Nandkumar, Srinivas
Subject: Acclarent Teleconference Request for K110097
Follow Up Flag: Follow up
Flag Status: Red

Hello Ms. Rudy and Dr. Nandkumar,

(b) (4)

[redacted]

Keri

Keri Yen
Manager, Regulatory Affairs
Acclarent, Inc.
1525-B O'Brien Drive
Menlo Park, CA 94025
650.687.5874 office
650.687.5889 fax

www.acclarent.com

*This e-mail transmission including any attachments or previous e-mails is intended for the addressee only and may contain information that is **confidential and/or privileged.** Unless you are the addressee (or are authorized to receive this e-mail for the addressee), you may not use, copy, or disclose this e-mail or any information contained in this e-mail. If you have received this e-mail in error, please advise Acclarent, Inc. by return e-mail or telephone (650)687-5888.*

Questions? Contact FDA/CDRH/OCE/DID at CDRH-FOISTATUS@fda.hhs.gov or 301-796-8118

Rudy, Susan

From: Yen, Keri [ACCUS] [KYen1@ITS.JNJ.com]
Sent: Friday, February 11, 2011 4:13 PM
To: Rudy, Susan
Cc: Nandkumar, Srinivas
Subject: RE: K110097 Acclarent Cyclops Multi-Angle Endoscope - Decision for "telephone hold"

Hi Ms. Rudy,

(b) (4)

[redacted]

Keri

From: Rudy, Susan [mailto:Susan.Rudy@fda.hhs.gov]
Sent: Friday, February 11, 2011 12:24 PM
To: Yen, Keri [ACCUS]
Cc: Nandkumar, Srinivas
Subject: K110097 Acclarent Cyclops Multi-Angle Endoscope - Decision for "telephone hold"
Importance: High

Dear Ms. Yen-

(b) (4)

[redacted]

Susan F. Rudy, MSN, CRNP, CORLN
Nurse Consultant and Family Nurse Practitioner
FDA/CDRH/ODE/DONED
Ear, Nose & Throat Devices Branch
WO66 Rm 2574

10903 New Hampshire Ave.
Silver Spring, MD 20993
T: 301 796 6472
F: 301 827 4601
E: Susan.Rudy@fda.hhs.gov

THIS MESSAGE IS INTENDED ONLY FOR THE USE OF THE PARTY TO WHOM IT IS ADDRESSED AND MAY CONTAIN INFORMATION THAT IS PRIVILEGED, CONFIDENTIAL, AND PROTECTED FROM DISCLOSURE UNDER LAW. If you are not the addressee, or a person authorized to deliver the document to the addressee, you are hereby notified that any review disclosure, dissemination, copy or other action based on the content of this communication is not authorized. If you have received this document in error please immediately notify us by e-mail or telephone.

Records processed under FOIA Request 2011-7654; Released 1/22/13

Food and Drug Administration
Office of Device Evaluation &
Office of In Vitro Diagnostics

COVER SHEET MEMORANDUM

From: Reviewer Name Susan Rudy CRNP

Subject: 510(k) Number K110097

To: The Record

Please list CTS decision code TH

☐ Refused to accept (Note: this is considered the first review cycle, See Screening Checklist http://eroom.fda.gov/eRoomReq/Files/CDRH3/CDRHPremarketNotification510kProgram/0_5631/Screening%20Checklist%202%2007.doc)

☒ Hold (Additional Information or Telephone Hold).

☐ Final Decision (SE, SE with Limitations, NSE, Withdrawn, etc.).

Please complete the following for a final clearance decision (i.e., SE, SE with Limitations, etc.):		YES	NO
Indications for Use Page	*Attach IFU*	✓	
510(k) Summary /510(k) Statement	*Attach Summary*	✓	
Truthful and Accurate Statement.	*Must be present for a Final Decision*	✓	
Is the device Class III?			✓
If yes, does firm include Class III Summary?	*Must be present for a Final Decision*		
Does firm reference standards? (If yes, please attach form from http://www.fda.gov/opacom/morechoices/fdaforms/FDA-3654.pdf)		✓	
Is this a combination product? (Please specify category _____, see http://eroom.fda.gov/eRoomReq/Files/CDRH3/CDRHPremarketNotification510kProgram/0_413b/COMBINATION%20PRODUCT%20ALGORITHM%20(REVISED%203-12-03).DOC			✓
Is this a reprocessed single use device? (Guidance for Industry and FDA Staff – MDUFMA - Validation Data in 510(k)s for Reprocessed Single-Use Medical Devices, http://www.fda.gov/cdrh/ode/guidance/1216.html)			✓
Is this device intended for pediatric use only?			✓
Is this a prescription device? (If both prescription & OTC, check both boxes.)		✓	
Did the application include a completed FORM FDA 3674, Certification with Requirements of ClinicalTrials.gov Data Bank?			✓
Is clinical data necessary to support the review of this 510(k)? Did the application include a completed FORM FDA 3674, *Certification with Requirements of ClinicalTrials.gov Data Bank?* (If not, then applicant must be contacted to obtain completed form.)			✓
Does this device include an Animal Tissue Source?			✓
All Pediatric Patients age<=21			
Neonate/Newborn (Birth to 28 days)			
Infant (29 days -< 2 years old)			
Child (2 years -< 12 years old)			
Adolescent (12 years -< 18 years old)		✓	
Transitional Adolescent A (18 - <21 years old) Special considerations are being given to this group, different from adults age ≥ 21 (different device design or testing, different protocol procedures, etc.)		✓	

Rev. 7/2/07

Questions? Contact FDA/CDRH/OCE/DID at CDRH-FOISTATUS@fda.hhs.gov or 301-796-8118

Records processed under FOIA Request 2011-7654; Released 1/22/13

Transitional Adolescent B (18 -<= 21; No special considerations compared to adults => 21 years old) ✓

Nanotechnology ✓

Is this device subject to the Tracking Regulation? (Medical Device Tracking Guidance, http://www.fda.gov/cdrh/comp/guidance/169.html) *Contact OC.* ✓

Regulation Number	Class*	Product Code
	II	EOB

(*If unclassified, see 510(k) Staff)

Additional Product Codes: _____

Review: [signature] (Branch Chief) ENTB (Branch Code) 2/11/11 (Date)

Final Review: _____ (Division Director) _____ (Date)

Questions? Contact FDA/CDRH/OCE/DID at CDRH-FOISTATUS@fda.hhs.gov or 301-796-8118

Records processed under FOIA Request 2011-7654; Released 1/22/13

Rudy, Susan

From: Rudy, Susan
ent: Friday, February 11, 2011 3:24 PM
To: 'Yen, Keri [ACCUS]'
Cc: Nandkumar, Srinivas
Subject: K110097 Acclarent Cyclops Multi-Angle Endoscope - Decision for "telephone hold"

Importance: High

Attachments: K110097 Acclarent Cyclops MultiAngle Endoscope TH Letter .pdf

K110097
rent Cyclops M

Dear Ms. Yen-

(b) (4)

[redacted]

Susan F. Rudy, MSN, CRNP, CORLN
Nurse Consultant and Family Nurse Practitioner
FDA/CDRH/ODE/DONED
Ear, Nose & Throat Devices Branch
WO66 Rm 2574
10903 New Hampshire Ave.
Silver Spring, MD 20993
T: 301 796 6472
F: 301 827 4601
E: Susan.Rudy@fda.hhs.gov

THIS MESSAGE IS INTENDED ONLY FOR THE USE OF THE PARTY TO WHOM IT IS ADDRESSED AND MAY CONTAIN INFORMATION THAT IS PRIVILEGED, CONFIDENTIAL, AND PROTECTED FROM DISCLOSURE UNDER LAW. If you are not the addressee, or a person authorized to deliver the document to the addressee, you are hereby notified that any review disclosure, dissemination, copy or other action based on the content of this communication is not authorized. If you have received this document in error please immediately notify us by e-mail or telephone.

Questions? Contact FDA/CDRH/OCE/DID at CDRH-FOISTATUS@fda.hhs.gov or 301-796-8118

Records processed under FOIA Request 2011-7654; Released 1/22/13

K110097 Acclarent Cyclops Multi-Angle Endoscope Model CYE002

Acclarent, Inc.
c/o Ms. Keri Yen, Regulatory Affairs Manager
1525-B O'Brien Dr.
Menlo Park, CA 94025
Kyen1@ITS.JNJ.com

Re: K110097
Trade Name: Acclarent Cyclops Multi-Angle Endoscope Model CYE002
Dated: January 13, 2011
Received: January 13, 2011

Dear Ms. Yen:

(b) (4)

[redacted]

Questions? Contact FDA/CDRH/OCE/DID at CDRH-FOISTATUS@fda.hhs.gov or 301-796-8118

Records processed under FOIA Request 2011-7654; Released 1/22/13

(b) (4)

[redacted]

Questions? Contact FDA/CDRH/OCE/DID at CDRH-FOISTATUS@fda.hhs.gov or 301-796-8118

Records processed under FOIA Request 2011-7654; Released 1/22/13

(b) (4)

[redacted]

Questions? Contact FDA/CDRH/OCE/DID at CDRH-FOISTATUS@fda.hhs.gov or 301-796-8118

Records processed under FOIA Request 2011-7654; Released 1/22/13

(b) (4)

[redacted]

Questions? Contact FDA/CDRH/OCE/DID at CDRH-FOISTATUS@fda.hhs.gov or 301-796-8118

Records processed under FOIA Request 2011-7654; Released 1/22/13

(b) (4)

[redacted]

Questions? Contact FDA/CDRH/OCE/DID at CDRH-FOISTATUS@fda.hhs.gov or 301-796-8118

Records processed under FOIA Request 2011-7654; Released 1/22/13

(b) (4)

[redacted]

Questions? Contact FDA/CDRH/OCE/DID at CDRH-FOISTATUS@fda.hhs.gov or 301-796-8118

Records processed under FOIA Request 2011-7654; Released 1/22/13

(b) (4)

[redacted]

Questions? Contact FDA/CDRH/OCE/DID at CDRH-FOISTATUS@fda.hhs.gov or 301-796-8118

Records processed under FOIA Request 2011-7654; Released 1/22/13

(b) (4)

[redacted]

Questions? Contact FDA/CDRH/OCE/DID at CDRH-FOISTATUS@fda.hhs.gov or 301-796-8118 357

Records processed under FOIA Request 2011-7654; Released 1/22/13

(b) (4)

[redacted]

Questions? Contact FDA/CDRH/OCE/DID at CDRH-FOISTATUS@fda.hhs.gov or 301-796-8118

Records processed under FOIA Request 2011-7654; Released 1/22/13

SPECIAL 510(k): Device Modification
ODE Review Memorandum (Decision Making Document is Attached)

To: THE FILE **RE:** DOCUMENT NUMBER K____110097_
Acclarent Cyclops Multi-Angle Endoscope Model CYE002

This 510(k) submission contains information/data on modifications made to the SUBMITTER'S own Class II, Class III or Class I devices requiring 510(k). The following items are present and acceptable (delete/add items as necessary):

1. The name and 510(k) number of the SUBMITTER'S previously cleared device. (For a preamendments device, a statement to this effect has been provided.)
2. Submitter's statement that the **INDICATION/INTENDED USE** of the modified device as described in its labeling **HAS NOT CHANGED** along with the proposed labeling which includes instructions for use, package labeling, and, if available, advertisements or promotional materials (labeling changes are permitted as long as they do not affect the intended use).
3. A description of the device **MODIFICATION(S),** including clearly labeled diagrams, engineering drawings, photographs, user's and/or service manuals in sufficient detail to demonstrate that the **FUNDAMENTAL SCIENTIFIC TECHNOLOGY** of the modified device **has not changed**.

(b) (4)

[redacted]

4. **Comparison Information** (similarities and differences) to applicant's legally marketed predicate device including, labeling, intended use, physical characteristics, and _____

5. A **Design Control Activities Summary** which includes:

(b) (4)

[redacted]

Records processed under FOIA Request 2011-7654; Released 1/22/13

6. A **Truthful and Accurate Statement**, a **510(k) Summary or Statement** and the **Indications for Use Enclosure (and Class III Summary for Class III devices)**

(b) (4)

[redacted]

Susan Rudy CRNP (Reviewer's Signature) S.N. 2-11-2011 (Date)

Comments

See deficiencies

revised:8/1/03

"SUBSTANTIAL EQUIVALENCE" (SE) DECISION MAKING DOCUMENTATION

	Yes	No	
1. Same Indication Statement?	X		If **YES** = Go To 3
2. Do Differences Alter The Effect Or Raise New Issues of Safety Or Effectiveness?			If **YES** = Stop **NSE**
3. Same Technological Characteristics?	X		If **YES** = Go To 5
4. Could The New Characteristics Affect Safety Or Effectiveness?			If **YES** = Go To 6
5. Descriptive Characteristics Precise Enough?		X	If **NO** = Go To 8 If **YES** = Stop **SE**
6. New Types Of Safety Or Effectiveness Questions?			If **YES** = Stop **NSE**
7. Accepted Scientific Methods Exist?			If **NO** = Stop **NSE**
8. Performance Data Available?	X		If **NO** = Request Data
9. Data Demonstrate Equivalence?		X	Final Decision:

Note: See http://eroom.fda.gov/eRoomReq/Files/CDRH3/CDRHPremarketNotification510kProgram/0_4148/FLOWCHART%20DECISION%20TREE%20.DOC for Flowchart to assist in decision-making process. Please complete the following table and answer the corresponding questions. "Yes" responses to questions 2, 4, 6, and 9, and every "no" response requires an explanation.

1. Explain how the new indication differs from the predicate device's indication: Same

2. Explain why there is or is not a new effect or safety or effectiveness issue: NA

3. Describe the new technological characteristics: Only minor changes to directions / angles of view and external endoscope markings.

4. Explain how new characteristics could or could not affect safety or effectiveness:

(b) (4) [redacted]

5. Explain how descriptive characteristics are not precise enough:

(b) (4) [redacted]

6. Explain new types of safety or effectiveness question(s) raised or why the question(s) are not new: NA

7. Explain why existing scientific methods can not be used: NA

8. Explain what performance data is needed: See deficiencies.

9. Explain how the performance data demonstrates that the device is or is not substantially equivalent:

(b) (4) [redacted]

(b) (4) [redacted]

Records processed under FOIA Request 2011-7654; Released 1/22/13

DEPARTMENT OF HEALTH & HUMAN SERVICES

Food and Drug Administration
ODE / DONED / ENTB
WO66 Rm 2574
10903 New Hampshire Avenue
Silver Spring, MD 20993-0002

TO: **The Record**

FROM: Susan Rudy, MSN, CRNP, CORLN S. Rudy CRNP 2/9/2011
Nurse Consultant and Family Nurse Practitioner, ENTB

DATE: 2/9/2011

RE: **K110097 Acclarent Cyclops Multi-Angle Endoscope Model CYE002**
Clinical, Labeling & Sterility review for Special 510(k)

RECOMMENDATION: TH

HISTORY

(b) (4)

[redacted]

Summary of Modifications from Sponsor:

(b) (4)

[redacted]

Questions? Contact FDA/CDRH/OCE/DID at CDRH-FOISTATUS@fda.hhs.gov or 301-796-8118 362

Records processed under FOIA Request 2011-7654; Released 1/22/13

(b) (4)

[redacted]

CLINICAL REVIEW

(b) (4)

[redacted]

Questions? Contact FDA/CDRH/OCE/DID at CDRH-FOISTATUS@fda.hhs.gov or 301-796-8118 363

Records processed under FOIA Request 2011-7654; Released 1/22/13

712

(b) (4)

[redacted]

Questions? Contact FDA/CDRH/OCE/DID at CDRH-FOISTATUS@fda.hhs.gov or 301-796-8118 364

Records processed under FOIA Request 2011-7654; Released 1/22/13

(b) (4)

[redacted]

Questions? Contact FDA/CDRH/OCE/DID at CDRH-FOISTATUS@fda.hhs.gov or 301-796-8118

Records processed under FOIA Request 2011-7654; Released 1/22/13

(b) (4)

[redacted]

Questions? Contact FDA/CDRH/OCE/DID at CDRH-FOISTATUS@fda.hhs.gov or 301-796-8118 366

Records processed under FOIA Request 2011-7654; Released 1/22/13

(b) (4)

[redacted]

Questions? Contact FDA/CDRH/OCE/DID at CDRH-FOISTATUS@fda.hhs.gov or 301-796-8118 367

Records processed under FOIA Request 2011-7654; Released 1/22/13

(b) (4)

[redacted]

Questions? Contact FDA/CDRH/OCE/DID at CDRH-FOISTATUS@fda.hhs.gov or 301-796-8118 368

Records processed under FOIA Request 2011-7654; Released 1/22/13

Standards / Guidances Utilized

(b) (4)

[redacted]

STERILITY REVIEW

(b) (4)

[redacted]

Questions? Contact FDA/CDRH/OCE/DID at CDRH-FOISTATUS@fda.hhs.gov or 301-796-8118

Records processed under FOIA Request 2011-7654; Released 1/22/13

(b) (4)

[redacted]

Questions? Contact FDA/CDRH/OCE/DID at CDRH-FOISTATUS@fda.hhs.gov or 301-796-8118 370

Records processed under FOIA Request 2011-7654; Released 1/22/13

(b) (4)

From: Rudy, Susan [mailto:Susan.Rudy@fda.hhs.gov]
Sent: Sunday, January 23, 2011 1:11 PM
To: Yen, Keri [ACCUS]
Subject: K110097 Acclarent Cyclops Multiangle Endoscope

Dear Ms. Yen-

(b) (4)

Susan F. Rudy, MSN, CRNP, CORLN, OCN
Nurse Consultant and Family Nurse Practitioner
FDA/CDRH/ODE/DONED

(b) (4)

Hi Ms. Rudy,

(b) (4)

Questions? Contact FDA/CDRH/OCE/DID at CDRH-FOISTATUS@fda.hhs.gov or 301-796-8118

371

Records processed under FOIA Request 2011-7654; Released 1/22/13

(b) (4)

[redacted]

(b) (4)

[redacted]

Regards,
Keri

END OF REVIEW

Recommendation: TH

Suggested Deficiencies:

(b) (4)

[redacted]

Questions? Contact FDA/CDRH/OCE/DID at CDRH-FOISTATUS@fda.hhs.gov or 301-796-8118

372

Records processed under FOIA Request 2011-7654; Released 1/22/13

(b) (4)

[redacted]

Questions? Contact FDA/CDRH/OCE/DID at CDRH-FOISTATUS@fda.hhs.gov or 301-796-8118

Records processed under FOIA Request 2011-7654; Released 1/22/13

(b) (4)

[redacted]

Questions? Contact FDA/CDRH/OCE/DID at CDRH-FOISTATUS@fda.hhs.gov or 301-796-8118

374

Records processed under FOIA Request 2011-7654; Released 1/22/13

(b) (4)

[redacted]

Questions? Contact FDA/CDRH/OCE/DID at CDRH-FOISTATUS@fda.hhs.gov or 301-796-8118

375

Records processed under FOIA Request 2011-7654; Released 1/22/13

(b) (4)

[redacted]

376

Questions? Contact FDA/CDRH/OCE/DID at CDRH-FOISTATUS@fda.hhs.gov or 301-796-8118

Records processed under FOIA Request 2011-7654; Released 1/22/13

(b) (4)

[redacted]

Questions? Contact FDA/CDRH/OCE/DID at CDRH-FOISTATUS@fda.hhs.gov or 301-796-8118

Records processed under FOIA Request 2011-7654; Released 1/22/13

To: Susan Rudy, MSN, CRNP, CORLN, OCN
Team Leader

Date: February 8, 2011

From: Vasant K. Dasika, PhD

Subject: Electrical Safety Consult for 510(k) Application K110097:
Acclarent Cyclops Multi-Angle Endoscope

(b) (4)

[redacted]

1. Recommendation

(b) (4)

[redacted]

2. Summary

(b) (4)

[redacted]

Questions? Contact FDA/CDRH/OCE/DID at CDRH-FOISTATUS@fda.hhs.gov or 301-796-8118

Records processed under FOIA Request 2011-7654; Released 1/22/13

(b) (4)

[redacted]

3. Device Indications

(b) (4)

[redacted]

4. Device Description

(b) (4)

[redacted]

Questions? Contact FDA/CDRH/OCE/DID at CDRH-FOISTATUS@fda.hhs.gov or 301-796-8118 379

Records processed under FOIA Request 2011-7654; Released 1/22/13

(b) (4)

[redacted]

Questions? Contact FDA/CDRH/OCE/DID at CDRH-FOISTATUS@fda.hhs.gov or 301-796-8118

Records processed under FOIA Request 2011-7654; Released 1/22/13

(b) (4)

[redacted]

Questions? Contact FDA/CDRH/OCE/DID at CDRH-FOISTATUS@fda.hhs.gov or 301-796-8118 381

Records processed under FOIA Request 2011-7654; Released 1/22/13

(b) (4)

[redacted]

Questions? Contact FDA/CDRH/OCE/DID at CDRH-FOISTATUS@fda.hhs.gov or 301-796-8118

Records processed under FOIA Request 2011-7654; Released 1/22/13

(b) (4)

[redacted]

5. EMC Testing

(b) (4)

[redacted]

Questions? Contact FDA/CDRH/OCE/DID at CDRH-FOISTATUS@fda.hhs.gov or 301-796-8118

Records processed under FOIA Request 2011-7654; Released 1/22/13

Table 12. Summary of Electromagnetic Compatibility Testing

(b) (4)

[redacted]

Questions? Contact FDA/CDRH/OCE/DID at CDRH-FOISTATUS@fda.hhs.gov or 301-796-8118

Records processed under FOIA Request 2011-7654; Released 1/22/13

(b) (4)

[redacted]

Questions? Contact FDA/CDRH/OCE/DID at CDRH-FOISTATUS@fda.hhs.gov or 301-796-8118 935

(b) (4)

[redacted]

Questions? Contact FDA/CDRH/OCE/DID at CDRH-FOISTATUS@fda.hhs.gov or 301-796-8118

(b) (4)

[redacted]

Questions? Contact FDA/CDRH/OCE/DID at CDRH-FOISTATUS@fda.hhs.gov or 301-796-8118

Records processed under FOIA Request 2011-7654; Released 1/22/13

(b) (4)

[redacted]

Materials Identification

(b) (4)

[redacted]

Questions? Contact FDA/CDRH/OCE/DID at CDRH-FOISTATUS@fda.hhs.gov or 301-796-8118

Records processed under FOIA Request 2011-7654; Released 1/22/13

(b) (4)

[redacted]

(b) (4)

[redacted]

Indications for Use

The indications for use statement is identical to that of the predicate device. The subject device is intended to provide an endoscopic means to view the nasal cavity or nasopharynx in an operating room setting.

Design Validation Activities

(b) (4)

[redacted]

Questions? Contact FDA/CDRH/OCE/DID at CDRH-FOISTATUS@fda.hhs.gov or 301-796-8118

389

Records processed under FOIA Request 2011-7654; Released 1/22/13

(b) (4)

[redacted]

Table 5. Summary of Design Validation Results

(b) (4)

[redacted]

Questions? Contact FDA/CDRH/OCE/DID at CDRH-FOISTATUS@fda.hhs.gov or 301-796-8118

Records processed under FOIA Request 2011-7654; Released 1/22/13

(b) (4)

[redacted]

Performance Testing

(b) (4)

[redacted]

Table 6: Cyclops Gen 2 Test Specifications and Results

(b) (4)

[redacted]

Questions? Contact FDA/CDRH/OCE/DID at CDRH-FOISTATUS@fda.hhs.gov or 301-796-8118

Records processed under FOIA Request 2011-7654; Released 1/22/13

(b) (4)

[redacted]

Questions? Contact FDA/CDRH/OCE/DID at CDRH-FOISTATUS@fda.hhs.gov or 301-796-8118

Records processed under FOIA Request 2011-7654; Released 1/22/13

(b) (4)

[redacted]

Questions? Contact FDA/CDRH/OCE/DID at CDRH-FOISTATUS@fda.hhs.gov or 301-796-8118

Records processed under FOIA Request 2011-7654; Released 1/22/13

(b) (4)

[redacted]

Table 10. Summary of Temperature Testing

(b) (4)

[redacted]

Questions? Contact FDA/CDRH/OCE/DID at CDRH-FOISTATUS@fda.hhs.gov or 301-796-8118

(b) (4)

Table 2. Summary of Temperature Testing (b) (4)

(b) (4)

(b) (4)

Questions? Contact FDA/CDRH/OCE/DID at CDRH-FOISTATUS@fda.hhs.gov or 301-796-8118

395

Records processed under FOIA Request 2011-7654; Released 1/22/13

(b) (4)

[redacted]

Daniel C Clupper

Daniel C. Clupper, Ph.D.
Biomedical Engineer
DONED/ENTB

Questions? Contact FDA/CDRH/OCE/DID at CDRH-FOISTATUS@fda.hhs.gov or 301-796-8118

Rudy, Susan

From: Rudy, Susan
Sent: Tuesday, February 08, 2011 12:42 PM
To: 'Yen, Keri [ACCUS]'
Subject: RE: Acclarent Cyclops (K110097) Update

Hi Ms. Yen-

Your application remains under review.

Have a great day!

Susan ("Sue") Rudy, MSN, CRNP, CORLN
Nurse Consultant & Family Nurse Practitioner
FDA/CDRH/ODE/DONED/ENTB
T: 301 796 6472

From: Yen, Keri [ACCUS] [mailto:KYen1@ITS.JNJ.com]
Sent: Monday, February 07, 2011 1:39 AM
To: Rudy, Susan
Subject: Acclarent Cyclops (K110097) Update

Hi Ms. Rudy,

(b) (4)

[redacted]

Regards,
Keri

Keri Yen
Manager, Regulatory Affairs
Acclarent, Inc.
1525-B O'Brien Drive
Menlo Park, CA 94025
650.687.5874 office
650.687.5889 fax

www.acclarent.com

*This e-mail transmission including any attachments or previous e-mails is intended for the addressee only and may contain information that is **confidential and/or privileged**. Unless you are the addressee (or are authorized to receive this e-mail for the addressee), you may not use, copy, or disclose this e-mail or any information contained in this e-mail. If you have received this e-mail in error, please advise Acclarent, Inc. by return e-mail or telephone (650)687-5888.*

Records processed under FOIA Request 2011-7654; Released 1/22/13

SCREENING CHECKLIST FOR SPECIAL PREMARKET NOTIFICATION [510(k)] SUBMISSIONS

510(k) Number: _____K110097_____

Section 1: Required Elements for a SPECIAL 510(k) submission:

	Present or Adequate	Missing or Inadequate
Medical Device User Fee Cover Sheet www.fda.gov/oc/mdufma/coversheet.html	√	
Cover Letter Appendix A of "Guidance for Industry and FDA Staff Format for Traditional and Abbreviated 510(k)s" updated November 17, 2005 http://www.fda.gov/cdrh/ode/guidance/1567.html	√	
Table of Contents	√ pp. 3-4	
Truthful and Accurate Statement Device Advice - www.fda.gov/cdrh/devadvice/314312.html#link_9	√ p.5	
Form FDA 3654 - Standards Data Report for 510(k)s – http://www.fda.gov/opacom/morechoices/fdaforms/FDA-3654.pdf 1: No standard used? = No Standards Form Required 2: Declaration of Conformity? = Yes Standards Form Required 3: Standard but no declaration? = Yes Standards Form Required	√ end of application	
Device's Trade Name, Device's Classification Name and Establishment Registration Number.	√	
Device Classification Regulation Number and Regulatory Status (Class I, Class II, Class III or Unclassified).	√	
Proposed Labeling - Device Advice www.fda.gov/cdrh/devadvice/314312.html#link_10	√ Section 4 & Appendix E	
Indications for Use Statement Device Advice - www.fda.gov/cdrh/devadvice/314312.html#link_6	√ Appendix B	
Substantial Equivalence Comparison, including comparisons of the new device with the predicate in areas that are listed on page 3-4 of the Premarket Notification [510)] Manual.	√ section 3 pp. 12-15	
510(k) Summary or 510(k) Statement Device Advice - www.fda.gov/cdrh/devadvice/314312.html#link_7	√ Appendix A p. 36	
Description of the device (or modification of the device) including diagrams, engineering drawings, photographs or service manuals.	√ section 2, Fig 1	
Identification of legally marketed predicate device. *	√ p. 12	
Compliance with performance standards. * [See Section 514 of the Act and 21 CFR 807.87 (d).]	NA	
**Class III Certification and Summary. ** **	NA	

Class III Summary and Certification Form www.fda.gov/cdrh/manual/stmnciii.html		
Financial Certification or Disclosure Statement for 510(k) notifications with a clinical study. FORM FDA 3454, Certification: Financial Interests and Arrangements of Clinical Investigators www.fda.gov/opacom/morechoices/fdaforms/FDA-3454.pdf FORM FDA 3455, Disclosure: Financial Interests and Arrangements of Clinical Investigators www.fda.gov/opacom/morechoices/fdaforms/FDA-3455.pdf Financial Disclosure by Clinical Investigators www.fda.gov/oc/guidance/financialdis.html.	NA	
Kit Certification: Device Advice http://www.fda.gov/cdrh/ode/odecl874.html	NA	

*- May not be applicable for Special 510(k)s.
**- Required for Class III devices, only.

Records processed under FOIA Request 2011-7654; Released 1/22/13

Section 2: Required Elements for a SPECIAL 510(k) submission:

	Present or Adequate	Inadequate or Missing
Name and 510(k) number of the submitter's own, unmodified predicate device.	√	
A description of the modified device and a comparison to the sponsor's predicate device.	√ Section 3, Table 3, p. 12	
A statement that the intended use(s) and indications of the modified device, as described in its labeling are the same as the intended uses and indications for the submitter's unmodified predicate device.	√ p.12	
Reviewer's confirmation that the modification has not altered the fundamental scientific technology of the submitter's predicate device.		
A Design Control Activities Summary that includes the following elements (a-c):		
a. Identification of Risk Analysis method(s) used to assess the impact of the modification on the device and its components, and the results of the analysis.	√ Section 5 p. 17 & Appendix F p. 42	
b. Based on the Risk Analysis, an identification of the required verification and validation activities, including the methods or tests used and the acceptance criteria to be applied.	√ Section 6 p. 19-24	
c. A Declaration of Conformity with design controls that includes the following statements:		
A statement that, as required by the risk analysis, all verification and validation activities were performed by the designated individual(s) and the results of the activities demonstrated that the predetermined acceptance criteria were met.? This statement is signed by the individual responsible for those particular activities.	√ p. 39	
A statement that the manufacturing facility is in conformance with the design control procedure requirements as specified in 21 CFR 820.30 and the records are available for review. This statement is signed by the individual responsible for those particular activities.	√ p. 39	

Items with checks in the Present or Adequate column do not require additional information from the sponsor.

Items with checks in the Missing or Inadequate column must be submitted before substantive review of the document.

Passed Screening __√___Yes _____No - Reviewer:____Susan Rudy, CRNP_____
Concurrence by Review Branch:____ENTB_____ Date:____1/24/2011_____

Questions? Contact FDA/CDRH/OCE/DID at CDRH-FOISTATUS@fda.hhs.gov or 301-796-8118

Records processed under FOIA Request 2011-7654; Released 1/22/13

510(k) "SUBSTANTIAL EQUIVALENCE" DECISION-MAKING PROCESS

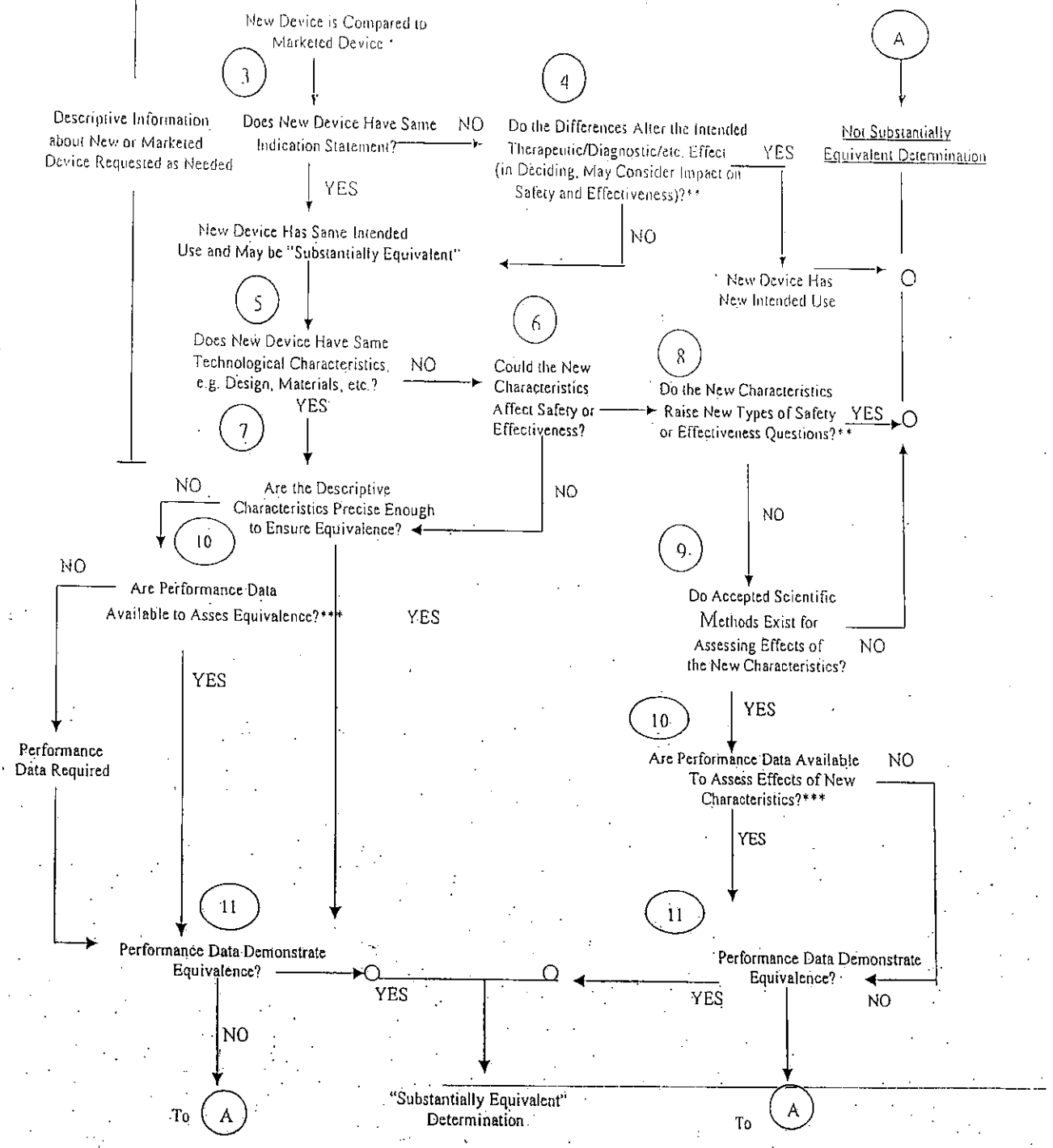

❖ 510(k) Submissions compare new devices to marketed devices. FDA requests additional information if the relationship between marketed and "predicate" (pre-Amendments or reclassified post-Amendments) devices is unclear.

❖❖ This decision is normally based on descriptive information alone, but limited testing information is sometimes required.

❖❖❖ Data maybe in the 510(k), other 510(k)s, the Center's classification files, or the literature.

Questions? Contact FDA/CDRH/OCE/DID at CDRH-FOISTATUS@fda.hhs.gov or 301-796-8118

Records processed under FOIA Request 2011-7654; Released 1/22/13

DEPARTMENT OF HEALTH & HUMAN SERVICES

Public Health Service

U.S. Food and Drug Administration
Center for Devices and Radiological Health
Document Control Center WO66-G609
10903 New Hampshire Avenue
Silver Spring, MD 20993-0002

March 14, 2011

ACCLARENT, INC.
1525-B O'BRIEN DR.
MENLO PARK, CALIFORNIA 94025
ATTN: KERI YEN

510k Number: K110097

Product: ACCLARENT CYCLOPS

The additional information you have submitted has been received.

We will notify you when the processing of this submission has been completed or if any additional information is required. Pleaseremember that all correspondence concerning your submission MUST be sent to the Document Mail Center at the above letterhead address. Correspondence sent to any address other than the one above will not be considered as part of your official premarket notification submission. Also, please note the new Blue Book Memorandum regarding Fax and E-mail Policy entitled, "Fax and E-Mail Communication with Industry about Premarket Files Under Review. Please refer to this guidance for information on current fax and e-mail practices at http://www.fda.gov/MedicalDevices/DeviceRegulationandGuidance/GuidanceDocuments/ucm089402.htm. On August 12, 2005 CDRH issued the Guidance for Industry and FDA Staff: Format for Traditional and Abbreviated 510(k)s. This guidance can be found at http://www.fda.gov/MedicalDevices/DeviceRegulationandGuidance/GuidanceDocuments/ucm084365.htm. Please refer to this guidance for assistance on how to format an original submission for a Traditional or Abbreviated 510(k).

The Safe Medical Devices Act of 1990, signed on November 28, states that you may not place this device into commercial distribution until you receive a letter from FDA allowing you to do so. As in the past, we intend to complete our review as quickly as possible. Generally we do so in 90 days. However, the complexity of a submission or a requirement for additional information may occasionally cause the review to extend beyond 90 days. Thus, if you have not received a written decision or been contacted within 90 days of our receipt date you may want to check with FDA to determine the status of your submission.

Please ensure that whether you submit a 510(k) Summary as per 21 CFR 807.92, or a 510(k) Statement as per 21 CFR 807.93, it meets the content and format regulatory requirements.

If you have procedural questions, please contact the Division of Small Manufacturers International and Consumer Assistance (DSMICA) at (301)796-7100 or at their toll-free number (800)638-2041, or contact the 510k staff at (301)796-5640.

Sincerely,

510(k) Staff

Questions? Contact FDA/CDRH/OCE/DID at CDRH-FOISTATUS@fda.hhs.gov or 301-796-8118

Records processed under FOIA Request 2011-7654; Released 1/22/13

K110097/S1

FDA CDRH DMC
MAR 14 2011
Received

Acclarent

March 11, 2011

Ms. Susan Rudy, MSN, CRNP, CORLN
Food and Drug Administration
Center for Devices and Radiological Health
Document Mail Center—WO66-G609
10903 New Hampshire Avenue
Silver Spring, MD 20993-0002

FDA CDRH DMC
MAR 11 2011
Received

RE: Response to K110097 AI Letter: (b) (4) [redacted]

Dear Ms. Rudy:

Acclarent received FDA's questions dated February 11, 2011 for the above referenced 510(k) submission and hereby submits two copies of our response.

Acclarent thanks the Agency for the interactive conference call of March 8, 2011 with you, Drs. Nandkumar, Clupper and Khan, and the guidance that you provided. The conference call was helpful in understanding the Agency's concerns, specifically surrounding [redacted] (b)

Acclarent, Inc regards the contents of this submission to be proprietary commercial information entitled to the full confidentiality safeguards of 21 CFR Parts 20.45, 20.61 and 807.95(b).

If you have any questions regarding this submission, please do not hesitate to contact me by phone (650) 687-5874, fax (650) 687-4449 or by email at kyen1@its.jnj.com. Alternatively, you may contact Mark Bishop by phone (650) 687-5843 or by email at mbishop1@its.jnj.com. Thank you for your time and consideration.

Sincerely,

Keri Yen
Manager, Regulatory & Clinical

K-14

Questions? Contact FDA/CDRH/OCE/DID at CDRH-FOISTATUS@fda.hhs.gov or 301-796-8118 289

(b)(4) Testing and Materials

(b)(4) Testing and Materials

(b)(4) Testing and Materials

(b)(4) Testing and Materials

(b)(4) Testing and Materials

(b)(4) Testing and Materials

(b)(4) Testing and Materials

(b)(4) Testing and Materials

(b)(4) Testing and Materials

(b)(4) Testing and Materials

(b)(4) Testing and Materials

(b)(4) Testing and Materials

(b)(4) Testing and Materials

(b)(4) Testing and Materials

(b)(4) Testing and Materials

(b)(4) Testing and Materials

(b)(4) Testing and Materials

(b)(4) Testing and Materials

(b)(4) Testing and Materials

(b)(4) Testing and Materials

(b)(4) Testing and Materials

(b)(4) Testing and Materials

(b)(4) Testing and Materials

(b)(4) Testing and Materials

(b)(4) Testing and Materials

(b)(4) Testing and Materials

(b)(4) Risk Management

(b)(4) Risk Management

(b)(4) Risk Management

(b)(4) Risk Management

(b)(4) Risk Management

Records processed under FOIA Request 2011-7654; Released 1/22/13

Yen, Keri [ACCUS]

rom: Rudy, Susan [Susan.Rudy@fda.hhs.gov]
Sent: Thursday, July 22, 2010 6:45 AM
To: Keri Yen
Subject: RE: Question on Cyclops Multiangle Endoscope K100577 / S001

Dear Ms. Yen-

(b) (4)

[redacted]

Many thanks for handling this in writing.
Have a wonderful day!

Susan ("Sue") Rudy, MSN, CRNP, CORLN, OCN
Nurse Consultant & Family Nurse Practitioner
FDA/CDRH/ODE/DONED/ENTB
: 301 796 6472

From: Keri Yen [mailto:kyen@acclarent.com]
Sent: Wednesday, July 21, 2010 6:05 PM
To: Rudy, Susan
Subject: RE: Question on Cyclops Multiangle Endoscope K100577 / S001

Hi Ms. Rudy,

Will we be able to have a teleconference call tomorrow?

Thanks.

Keri

From: Keri Yen
Sent: Tuesday, July 20, 2010 8:56 PM
To: 'Rudy, Susan'
Cc: Mike Handley
Subject: RE: Question on Cyclops Multiangle Endoscope K100577 / S001

.i Ms. Rudy,

(b) (4)

[redacted]

Questions? Contact FDA/CDRH/OCE/DID at CDRH-FOISTATUS@fda.hhs.gov or 301-796-8118

320

(b) (4)

[redacted]

Thank you for your consideration.

Keri

From: Rudy, Susan [mailto:Susan.Rudy@fda.hhs.gov]
Sent: Monday, July 19, 2010 9:18 AM
To: Keri Yen
Subject: Question on Cyclops Multiangle Endoscope K100577 / S001
Importance: High

Hi Ms. Yen-

(b) (4)

[redacted]

324

Records processed under FOIA Request 2011-7654; Released 1/22/13

(b) (4)

[redacted]

Thank you and have a great day!

Susan F. Rudy, MSN, CRNP, CORLN, OCN
Nurse Consultant and Family Nurse Practitioner
FDA/CDRH/ODE/DONED
Ear, Nose & Throat Devices Branch
WO66 Rm 2574
10903 New Hampshire Ave.
Silver Spring, MD 20993
T: 301 796 6472
F: 301 827 4601
: Susan.Rudy@fda.hhs.gov

322

Questions? Contact FDA/CDRH/OCE/DID at CDRH-FOISTATUS@fda.hhs.gov or 301-796-8118

Records processed under FOIA Request 2011-7654; Released 1/22/13

Instructions For Use

Acclarent Cyclops™ Multi-Angle Endoscope

Acclarent Cyclops™ Light Guide Cable Adapters

Acclarent Cyclops™ Models covered
by these Instructions for Use:
CYE002

Check www.Acclarent.com at least annually for the current version of the Instructions for Use

Acclarent, Inc., 1525-B O'Brien Drive, Menlo Park, CA 94025 U.S.A. Customer Service: +877-SPLASTY
+650-687-5888

Questions? Contact FDA/CDRH/OCE/DID at CDRH-FOISTATUS@fda.hhs.gov or 301-796-8118

Records processed under FOIA Request 2011-7654; Released 1/22/13

CAREFULLY READ ALL INSTRUCTIONS PRIOR TO USE.

CAUTION: Federal (U.S.A.) law restricts this device to sale by or on the order of a physician.

PACKAGING

STERILITY:

NON-STERILE: The Acclarent Cyclops endoscope is provided NON-STERILE. The Acclarent Cyclops endoscope must be cleaned and sterilized prior to its first use, before each subsequent use and after returning from repairs. See instructions below for cleaning and sterilization.

DESCRIPTION

The Acclarent Cyclops endoscope is a rigid endoscope. It incorporates two image adjustment controls.

Specifications	
Working Length	175mm
Shaft Diameter	4 mm
Shaft Direction Control	Allows shaft to be rotated between 0° and 160° in either direction from the 12 o'clock rotation position.
Angle Control	Angle of view can be adjusted between 10° and 90°.

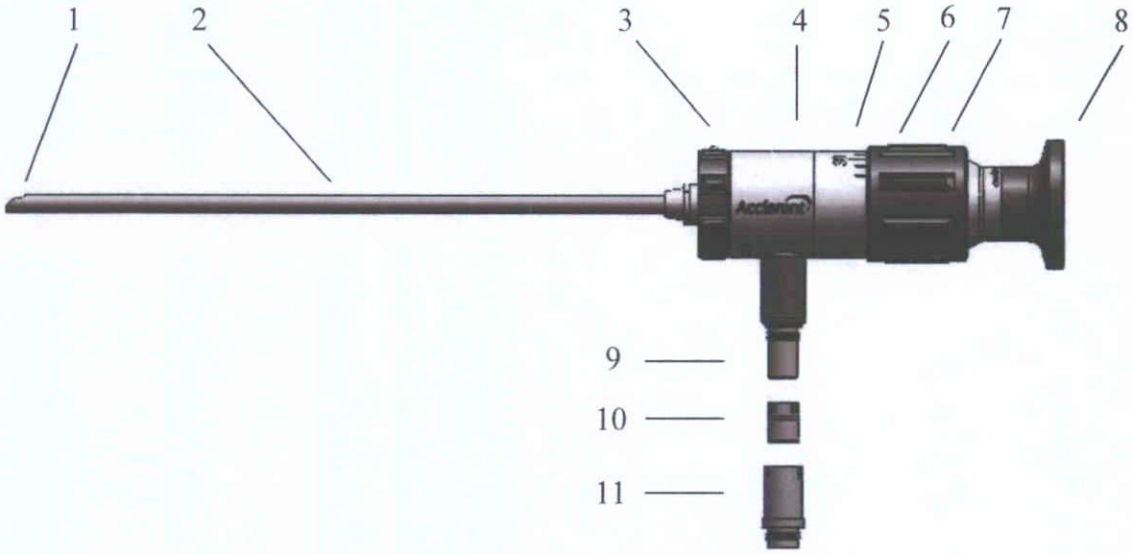

Figure 1. Acclarent Cyclops Multi-Angle Endoscope

Legend:

1) Distal Window
2) Shaft
3) Shaft Direction Control
4) Scope Body
5) Angle of View Scale
6) Angle Indicator (small bump on surface of Angle Control)
7) Angle Control
8) Eyepiece
9) Light Guide Post - ACMI Light Cable Configuration (fixed)
10) Wolf Light Cable Adapter (detachable)
11) Olympus / Storz Light Cable Adapter (detachable)

Questions? Contact FDA/CDRH/OCE/DID at CDRH-FOISTATUS@fda.hhs.gov or 301-796-8118

324

INDICATIONS FOR USE

The Acclarent Cyclops Multi-Angle Endoscope is intended to provide an endoscopic means to view the nasal cavity and nasopharynx in an operating room environment.

CONTRAINDICATIONS

Do not use Acclarent Cyclops on patients who already have active implanted devices that would be affected by a magnetic field (e.g. pacemaker, implantable cardioverter-defibrillator, cochlear implant and deep brain stimulator) because Acclarent Cyclops contains small rare-earth permanent magnets. Additionally, do not use Acclarent Cyclops on patients with inferior vena cava filters that have been implanted within the previous two weeks.

WARNINGS

⚠ NON-STERILE: The Acclarent Cyclops endoscope is provided NON-STERILE. The Acclarent Cyclops endoscope must be cleaned and sterilized prior to its first use, before each subsequent use and after returning from repairs. See instructions below for cleaning and sterilization.

⚠ Do not use the Acclarent Cyclops endoscope if you are unable to clean and sterilize according to the validated procedures contained in these instructions.

⚠ Do not use a damaged or defective Acclarent Cyclops endoscope. Inspect the Acclarent Cyclops endoscope prior to each examination or procedure and before sterilization based on the instructions below.

⚠ The connection between the Acclarent Cyclops endoscope and the light source can become very hot. Use care when handling and do not rest the scope directly on a patient or flammable material.

⚠ Surface temperature near the distal tip may exceed 41°C if the device is operated at maximum brightness for extended periods of time. To avoid burns caused by an overheated distal tip or distal window, light cables with a diameter of 5.0mm or smaller should be used. Acclarent recommends the use of a 3.5mm fiber optic light cable. Always adjust the light source to the minimum light output necessary to illuminate the endoscopic image. Prior to disconnecting the fiber optic cable, allow the endoscope to cool.

⚠ These Instructions for Use are meant to facilitate use of the Acclarent Cyclops and are not instructions on how to perform endoscopic procedures.

PRECAUTIONS

⚠ Do not bend the Acclarent Cyclops.

⚠ Do not hold the Acclarent Cyclops by its shaft, as this can cause damage.

⚠ The minimum angle of view allowed by the Acclarent Cyclops is 10°. Use caution when advancing the scope.

⚠ To maintain optical quality, do not clean the Acclarent Cyclops or light cable adapters in an ultrasonic bath.

⚠ Do not accelerate the cooling of the Acclarent Cyclops, as this can cause damage.

⚠ Do not flash sterilize the Acclarent Cyclops.

⚠ Cleaning and sterilization can only be guaranteed if the Acclarent Cyclops is cleaned and sterilized according to properly validated methods. The minimum cleaning and sterilization

Questions? Contact FDA/CDRH/OCE/DID at CDRH-FOISTATUS@fda.hhs.gov or 301-796-8118

Records processed under FOIA Request 2011-7654; Released 1/22/13

procedures are provided in this IFU. The Automated Cleaning procedure has not been validated as effective in accomplishing disinfection. It is the responsibility of the user to qualify any deviations from the recommended procedures.

⚠ Manual Cleaning PLUS Automated Cleaning must be performed each time the Acclarent Cyclops and light cable adapters are reprocessed.

⚠ If the Acclarent Cyclops was used in a patient with Creutzfeld-Jakob disease (CJD), suspected CJD or possible variants of CJD, Acclarent recommends safely disposing of the Acclarent Cyclops. For disposal instructions, see Section D.

⚠ When the angle control is set to greater than 70°, the illumination provided by the Acclarent Cyclops becomes less intense.

Questions? Contact FDA/CDRH/OCE/DID at CDRH-FOISTATUS@fda.hhs.gov or 301-796-8118

Records processed under FOIA Request 2011-7654; Released 1/22/13

INSTRUCTIONS FOR USE

A. Inspection and Testing	1) Remove and discard the protection caps from the distal tip, eyepiece and light guide post immediately upon receipt. 2) Inspect the endoscope immediately upon receipt, and before and after every procedure. 3) Inspect the distal window and eyepiece for scratches, chips, fingerprints or residual debris by observing reflected light on the surfaces of the distal window and eyepiece. 4) To test image quality, look through the eyepiece. The image should be clear and distinct. If the distal window, eyepiece lens and light guide post surface are cloudy, dirty or scratched, or if the shaft is bent, scratched, dented, corroded, pitted or exhibits other surface irregularities, the image may not be clear. If the image is not clear, the Acclarent Cyclops should not be used, and should be sent in for repair or taken out of service. 5) Check light transmission by pointing the distal window of the Acclarent Cyclops at a light source and inspecting the light transmitting surface of the light guide post connector (see Figure 2). If the glass light fibers are broken, the light transmitting surface of the light guide post will illuminate unevenly. Individual broken fibers do not necessarily result in a noticeable reduction in image quality. However, if approximately 25% of the transmitting surface of the light guide post is illuminating unevenly, the endoscope should not be used, and should be sent in for repair or taken out of service. 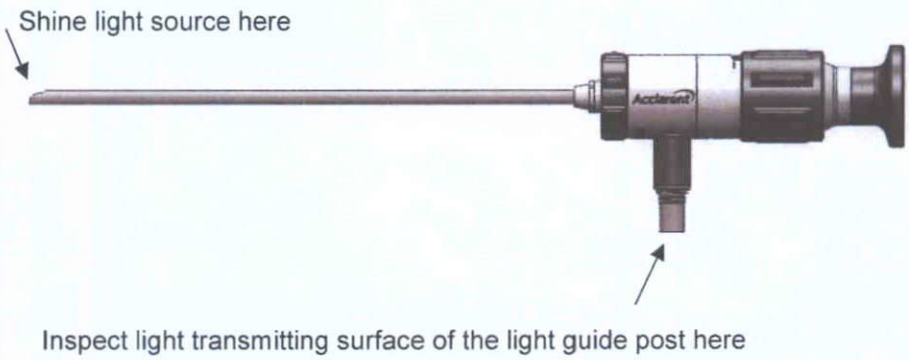 **Figure 2. Method for checking light transmission** 6) Test the controls. Rotate the angle control and shaft control while looking through the eyepiece. Ensure that the image changes appropriately. Acclarent Cyclops requires no lubrication to maintain proper function. If the image does not change appropriately, the endoscope should not be used, and should be sent in for repair or taken out of service.
B. Point of Use:	1) Assembly: a. Connect appropriate light cable adapters as required. i. To connect the Wolf light cable adapter, slide the adapter over the light guide post and tighten in place using the screw threads. ii. To connect the Olympus / Storz light cable adapter, slide the adapter over the light guide post and tighten in place using the screw threads. b. If a camera is utilized, connect the camera coupler to the eyepiece.

Questions? Contact FDA/CDRH/OCE/DID at CDRH-FOISTATUS@fda.hhs.gov or 301-796-8118

Records processed under FOIA Request 2011-7654; Released 1/22/13

i. The standard B-cup eyepiece can be used with cameras or universal C-mount camera couplers .

c. Connect the light guide cable to the light guide post/adapter. Only light cables with a diameter of 5.0mm and smaller should be used to prevent overheating of the distal tip.

2) Usage:

a. Observe the respective manufacturer's instructions when using the Acclarent Cyclops endoscope with other implements, instruments or optical cables.

b. Acclarent recommends use with Xenon (up to 300W) light sources.

c. Make sure that the distal window, eyepiece lens or light guide post surface do not contact abrasive surfaces. Anti-fog solution (e.g. Covidien's FRED™ or DeRoyal DeFogger™) may be used with Acclarent Cyclops.to help prevent fogging of the distal window and eyepiece lens.

d. Handle the Acclarent Cyclops endoscope with care. Hard impacts, particularly to the distal end, may result in damage or cracks.

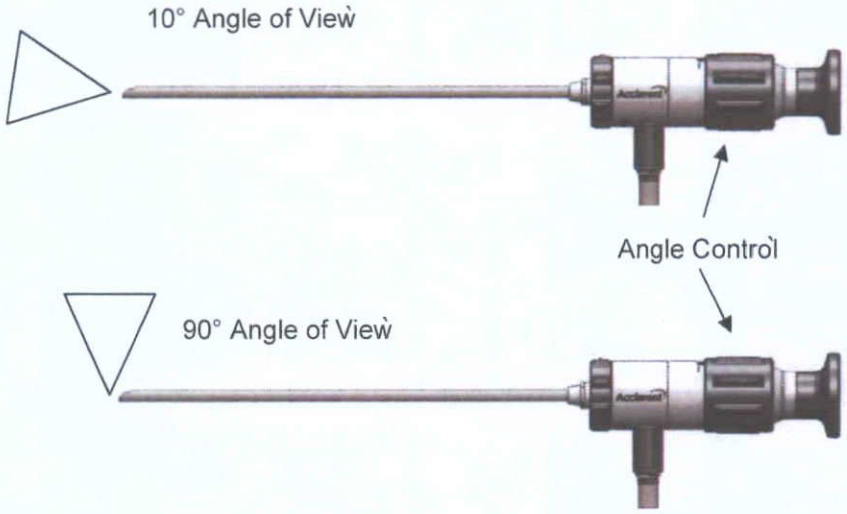

Figure 3. Acclarent Cyclops Angle of View

e. To change the Acclarent Cyclops endoscope's angle of view, rotate the Angle Control. The angle indicator on the Angle Control aligns with the set of reference markings on the body of the endoscope and displays the approximate angle of view selected by the user. The Acclarent Cyclops endoscope displays angles between 10° and 90° as shown in Figure 3.

f. To rotate the Acclarent Cyclops endoscope's shaft, rotate the Shaft Direction Control. The scope allows shaft rotation of 160° in both directions from the 12 o'clock rotational position. A marker that displays the 12 o'clock rotational position is visible in the endoscopic view. An indicator on the Shaft Direction Control dial illustrates the location of the 12 o'clock rotational position.

C. Point of Use Cleaning	The following steps are to be performed at the point of use: 1) During surgery, keep the device moist by periodically wiping with a wet gauze

Questions? Contact FDA/CDRH/OCE/DID at CDRH-FOISTATUS@fda.hhs.gov or 301-796-8118

	or a lap sponge and sterile water. 2) After surgery has concluded, use a wet gauze or a lap sponge and sterile water to wipe off any visible debris. Keep the device moist by adding a moist towel to the transport container until it can be cleaned according to the reprocessing instructions described below. Cleaning should be completed on the Acclarent Cyclops and the light cable adapters within 30 minutes following their use.
D. General Considerations for Endoscope reprocessing:	**Complete Preparation for Cleaning, Manual Cleaning plus Automated Cleaning and Sterilization each time when reprocessing the Acclarent Cyclops and light cable adapters.** 1) All reprocessing should be completed by personnel trained in the appropriate reprocessing techniques and safety. All reprocessing personnel should don appropriate personal protective attire. 2) Cleaning should be completed on the Acclarent Cyclops and the light cable adapters within 30 minutes following their use. Keep device continuously moist with a moist towel prior to cleaning. 3) If the Acclarent Cyclops endoscope was used in a patient with Creutzfeld-Jakob disease (CJD), suspected CJD or possible variants of CJD, Acclarent recommends safely disposing of the Acclarent Cyclops endoscope. The safest and most unambiguous method for ensuring that there is no risk of residual infectivity on contaminated instruments and other materials is to discard and destroy them by incineration. For more information regarding exposure to Creutzfeld-Jakob disease (CJD) or possible variants of CJD, and for information about disposing contaminated devices, please see the following references: a. Brown, S. A., Merritt, K., Woods, T. O., & Busick, D. N. (2005). Effects on instruments of the World Health Organization – Recommended protocols for decontamination after possible exposure to transmissible spongiform encephalopathy contaminated tissue. Appl Biomater, 72B, 186-190. DOI 10.1002/jbm.b.30125. b. World Health Organization Infection Control Guideline for Transmissible Spongiform Encephalopathies. Geneva, Switzerland, March, 1999 available from: http://www.who.int/csr/resources/publications/bse/WHO_CDS_CSR_APH_2000_3/en/ ⚠ **CAUTION:** Do not place the Acclarent Cyclops directly on or next to an active implantable device that may be affected by magnetic fields as the device contains small rare earth permanent magnets.
E. Preparation for Cleaning	1) Disassembly a. Disconnect the light cable from the light guide post. b. If a camera was utilized, disconnect the camera coupling device from the eyepiece. c. Remove any light cable adapters used. d. Keep Acclarent Cyclops and light cable adapters continuously moist until Manual Cleaning can commence at the point of central reprocessing. The device may be kept moist by adding a moist towel to the transport container.
F. Cleaning: Manual	The following steps are to be performed at the point of central reprocessing:

Questions? Contact FDA/CDRH/OCE/DID at CDRH-FOISTATUS@fda.hhs.gov or 301-796-8118

1) Manual Cleaning:
   a. Prepare a neutral pH enzymatic detergent (e.g. Enzol®) per the manufacturer's instructions (e.g. for Enzol®) mix 1 oz/gal with lukewarm tap water). Prepare a fresh mixture of cleaning solution for each use.
   b. Immerse the Acclarent Cyclops and light cable adapters entirely in the detergent solution for at least 15 minutes.
   c. Use a soft bristle brush (e.g. a standard size tooth brush) to remove any debris / soil from the Acclarent Cyclops and a soft bristled pipe cleaner for the light cable adapters while they are submerged. Ensure that the brush and the pipe cleaner can access the hard to reach areas such as cracks, crevices and threads on the light guide post and light guide adapters. Ensure that all visible debris is removed.
   d. Rinse the endoscope and light cable adapters under cold running tap water for at least 1 minute.

⚠ **CAUTION**: Manual Cleaning PLUS Automated Cleaning must be performed each time the Acclarent Cyclops and light cable adapters are reprocessed.

⚠ **CAUTION**: The Automated Cleaning reprocessing parameters have not been validated as effective in accomplishing *disinfection* of the Acclarent Cyclops.

G. Cleaning: Automated

The following steps are to be performed at the point of central reprocessing after completion of Manual Cleaning (described above):

1) Automated Cleaning:
   a. Place the Acclarent Cyclops together with its light cable adapters into a separate mesh basket. Ensure that the Acclarent Cyclops and light cable adapters do not touch each other when placed into the basket.
   b. Place a mesh screen over the basket to prevent the Acclarent Cyclops and light cable adapters from coming out of the basket during processing.
   c. Place the mesh basket with Acclarent Cyclops and light cable adapters into a general instrument washer-disinfector (e.g. Amsco Steris 444 Washer / Disinfector) to clean the Acclarent Cyclops and light cable adapters.
   d. Select a neutral pH enzymatic detergent (e.g. Enzol) and a neutral pH instrument cleaner (e.g. RenuKlenz™). Prepare per the instructions of the detergent manufacturer (for example, Enzol 1oz/gal and RenuKlenz ¼oz/gallon). Prepare a fresh mixture of cleaning solution for each use.
   e. Run the washing machine cycle per the instructions provided by the manufacturer. The minimum cleaning cycle is described below in table 1:

Table 1: Automatic Cleaning Parameters:

Phase	Recirculation Time	Water Temperature	Detergent Type
Pre Wash	3 minutes	Cold tap water	N/A

Questions? Contact FDA/CDRH/OCE/DID at CDRH-FOISTATUS@fda.hhs.gov or 301-796-8118

Enzyme Wash	5 minutes	Hot tap water	Neutral pH enzymatic detergent
Wash 1	5 minutes	65°C (Set Point)	Neutral pH instrument cleaner
Rinse 1	2 minutes	Hot tap water	N/A
Dry Phase	7 minutes	115°C	N/A

f. Remove the Acclarent Cyclops and light cable adapters from the washing machine following the cleaning cycle and after allowing sufficient time for the devices to cool so they can be safely handled.
g. Inspect the devices to ensure that all visible soil, stains and debris have been removed.

⚠ **CAUTION**: Manual Cleaning PLUS Automated Cleaning must be performed each time the Acclarent Cyclops and light cable adapters are reprocessed.

⚠ **CAUTION**: The Automated Cleaning reprocessing parameters have not been validated as effective in accomplishing *disinfection* of the Acclarent Cyclops.

H. Post-cleaning Inspection and Testing

1) After cleaning is complete, inspect the Acclarent Cyclops per the instructions in Section A.

I. Sterilization: Steam:

1) Do not "Flash" sterilize the Acclarent Cyclops or light cable adapters.
2) Ensure the Acclarent Cyclops and light cable adapters are disassembled before sterilization.
3) Double wrap the Acclarent Cyclops and light cable adapters with 1-ply polypropylene wrap (e.g. Kimguard KC600).
4) Complete sterilization per AAMI ST79:2006, A1:2008,A2:2009. The validated parameters are listed in Table 2.

Table 2: Parameters for Steam Sterilization

Sterilization Method	Pre-Vacuum
Pulses (minimum)	3
Temperature	132°C / 270° F
Exposure time	4 minutes
Drying Time	20 minutes

5) After sterilization, allow the Acclarent Cyclops, and light cable adapters to cool down to room temperature. Do not accelerate cooling, as this may damage the Acclarent Cyclops endoscope.

J. Storage

1) Store the Acclarent Cyclops endoscope in a dry, clean and safe place at room temperature, in its wrapped sterilization container.
2) Acclarent does not recommend storing the Acclarent Cyclops and light cable adapters in their shipping box.

K. Disposal

1) For disposal, observe standard protocols for disposal of surgical devices (see Section D for references).

Questions? Contact FDA/CDRH/OCE/DID at CDRH-FOISTATUS@fda.hhs.gov or 301-796-8118

Technical service, maintenance or repairs:

- Contact Acclarent Customer Service:
- Acclarent, Inc.
  1525-B O'Brien Drive
  Menlo Park, CA 94025
  U.S.A.
- Toll Free: 1-877-SPLASTY (1-877-775-2789)
- Before returning any product to Acclarent, please contact Acclarent Customer Service to obtain a return goods authorization and product return packaging.
- Please clean and sterilize the endoscope and mark it as "Sterilized" prior to return.

GRAPHIC SYMBOLS CONTAINED IN DEVICE LABELING

Non Sterile	Non-Sterile	⟷	Working Length
i	Consult Instructions For Use	**Rx ONLY**	On Order of Physician Only
	Scope Outer Diameter	REF	Product Code
SN	Serial Number		Light Cable Adapter
Latex	Contains No Natural Rubber Latex	EC REP	European Authorized Representative
CE	CE Mark		Keep Away from Sunlight
	Manufacturer		Manufacturing Date
	Acclarent Cyclops Multi-Angle Endoscope	⚠	Caution

©2010 Acclarent, Inc. All rights reserved.

Questions? Contact FDA/CDRH/OCE/DID at CDRH-FOISTATUS@fda.hhs.gov or 301-796-8118

Records processed under FOIA Request 2011-7654; Released 1/22/13

Manufactured for:
Acclarent, Inc.
1525-B O'Brien Drive
Menlo Park, CA 94025

USA
Toll Free: 1-877-SPLASTY (1-877-775-2789)

Questions? Contact FDA/CDRH/OCE/DID at CDRH-FOISTATUS@fda.hhs.gov or 301-796-8118

Records processed under FOIA Request 2011-7654; Released 1/22/13

DEPARTMENT OF HEALTH AND HUMAN SERVICES
FOOD AND DRUG ADMINISTRATION

CDRH PREMARKET REVIEW SUBMISSION COVER SHEET

Form Approval
OMB No. 9010-0120
Expiration Date: August 31, 2010.
See OMB Statement on page 5.

Date of Submission	User Fee Payment ID Number	FDA Submission Document Number *(if known)*
01/12/2011	MD6053650-956733	

SECTION A — TYPE OF SUBMISSION

PMA	PMA & HDE Supplement	PDP	510(k)	Meeting
☐ Original Submission	☐ Regular (180 day)	☐ Original PDP	☑ Original Submission:	☐ Pre-510(K) Meeting
☐ Premarket Report	☐ Special	☐ Notice of Completion	☐ Traditional	☐ Pre-IDE Meeting
☐ Modular Submission	☐ Panel Track (PMA Only)	☐ Amendment to PDP	☑ Special	☐ Pre-PMA Meeting
☐ Amendment	☐ 30-day Supplement		☐ Abbreviated (Complete section I, Page 5)	☐ Pre-PDP Meeting
☐ Report	☐ 30-day Notice		☐ Additional Information	☐ Day 100 Meeting
☐ Report Amendment	☐ 135-day Supplement		☐ Third Party	☐ Agreement Meeting
☐ Licensing Agreement	☐ Real-time Review			☐ Determination Meeting
	☐ Amendment to PMA & HDE Supplement			☐ Other *(specify)*:
	☐ Other			

IDE	Humanitarian Device Exemption (HDE)	Class II Exemption Petition	Evaluation of Automatic Class III Designation (De Novo)	Other Submission
☐ Original Submission	☐ Original Submission	☐ Original Submission	☐ Original Submission	☐ 513(g)
☐ Amendment	☐ Amendment	☐ Additional Information	☐ Additional Information	☐ Other *(describe submission)*:
☐ Supplement	☐ Supplement			
	☐ Report			
	☐ Report Amendment			

Have you used or cited Standards in your submission? ☑ Yes ☐ No *(If Yes, please complete Section I, Page 5)*

SECTION B — SUBMITTER, APPLICANT OR SPONSOR

Company / Institution Name: Acclarent, Inc.	Establishment Registration Number *(if known)*: 3005172759		
Division Name *(if applicable)*:	Phone Number *(including area code)*: (650) 687-5874		
Street Address: 1525-B O'Brien Drive	FAX Number *(including area code)*: (650) 687-4449		
City: Menlo Park	State / Province: CA	ZIP/Postal Code: 94025	Country: USA
Contact Name: Keri Yen			
Contact Title: Regulatory Affairs Manager	Contact E-mail Address: kyen1@its.jnj.com		

SECTION C — APPLICATION CORRESPONDENT (e.g., consultant, if different from above)

Company / Institution Name: Same as Section B			
Division Name *(if applicable)*:	Phone Number *(including area code)*: ( )		
Street Address:	FAX Number *(including area code)*: ( )		
City:	State / Province:	ZIP/Postal Code:	Country:
Contact Name:			
Contact Title:	Contact E-mail Address:		

PSC Graphics: (301) 443-1090 EF

Questions? Contact FDA/CDRH/OCE/DID at CDRH-FOISTATUS@fda.hhs.gov or 301-796-8118

Records processed under FOIA Request 2011-7654; Released 1/22/13

SECTION D1 — REASON FOR APPLICATION - PMA, PDP, OR HDE

- ☐ Withdrawal
- ☐ Additional or Expanded Indications
- ☐ Request for Extension
- ☐ Post-approval Study Protocol
- ☐ Request for Applicant Hold
- ☐ Request for Removal of Applicant Hold
- ☐ Request to Remove or Add Manufacturing Site
- ☐ Process change:
  - ☐ Manufacturing
  - ☐ Sterilization
  - ☐ Packaging
  - ☐ Other *(specify below)*
- ☐ Response to FDA correspondence:
- ☐ Change in design, component, or specification:
  - ☐ Software / Hardware
  - ☐ Color Additive
  - ☐ Material
  - ☐ Specifications
  - ☐ Other *(specify below)*
- ☐ Labeling change:
  - ☐ Indications
  - ☐ Instructions
  - ☐ Performance
  - ☐ Shelf Life
  - ☐ Trade Name
  - ☐ Other *(specify below)*
- ☐ Location change:
  - ☐ Manufacturer
  - ☐ Sterilizer
  - ☐ Packager
- ☐ Report Submission:
  - ☐ Annual or Periodic
  - ☐ Post-approval Study
  - ☐ Adverse Reaction
  - ☐ Device Defect
  - ☐ Amendment
- ☐ Change in Ownership
- ☐ Change in Correspondent
- ☐ Change of Applicant Address

☐ Other Reason *(specify)*:

SECTION D2 — REASON FOR APPLICATION - IDE

- ☐ New Device
- ☐ New Indication
- ☐ Addition of Institution
- ☐ Expansion / Extension of Study
- ☐ IRB Certification
- ☐ Termination of Study
- ☐ Withdrawal of Application
- ☐ Unanticipated Adverse Effect
- ☐ Notification of Emergency Use
- ☐ Compassionate Use Request
- ☐ Treatment IDE
- ☐ Continued Access
- ☐ Change in:
  - ☐ Correspondent / Applicant
  - ☐ Design / Device
  - ☐ Informed Consent
  - ☐ Manufacturer
  - ☐ Manufacturing Process
  - ☐ Protocol - Feasibility
  - ☐ Protocol - Other
  - ☐ Sponsor
- ☐ Report submission:
  - ☐ Current Investigator
  - ☐ Annual Progress Report
  - ☐ Site Waiver Report
  - ☐ Final
- ☐ Repose to FDA Letter Concerning:
  - ☐ Conditional Approval
  - ☐ Deemed Approved
  - ☐ Deficient Final Report
  - ☐ Deficient Progress Report
  - ☐ Deficient Investigator Report
  - ☐ Disapproval
  - ☐ Request Extension of Time to Respond to FDA
  - ☐ Request Meeting
  - ☐ Request Hearing

☐ Other Reason *(specify)*:

SECTION D3 — REASON FOR SUBMISSION - 510(k)

- ☐ New Device
- ☐ Additional or Expanded Indications
- ☐ Change in Technology

☑ Other Reason *(specify)*:

Device modification to predicate device. Fundamental scientific technology and indications for use are identical to predicate device.

Questions? Contact FDA/CDRH/OCE/DID at CDRH-FOISTATUS@fda.hhs.gov or 301-796-8118 335

Records processed under FOIA Request 2011-7654; Released 1/22/13

SECTION E ADDITIONAL INFORMATION ON 510(K) SUBMISSIONS

Product codes of devices to which substantial equivalence is claimed

1	EOB	2		3		4	
5		6		7		8	

Summary of, or statement concerning, safety and effectiveness information

- [x] 510 (k) summary attached
- [ ] 510 (k) statement

Information on devices to which substantial equivalence is claimed *(if known)*

	510(k) Number		*Trade or Proprietary or Model Name*		*Manufacturer*
1	K100577	1	Acclarent Cyclops Multi-Angle Endoscope	1	Acclarent
2		2		2	
3		3		3	
4		4		4	
5		5		5	
6		6		6	

SECTION F PRODUCT INFORMATION - APPLICATION TO ALL APPLICATIONS

Common or usual name or classification

Endoscope

	Trade or Proprietary or Model Name for This Device		Model Number
1	Acclarent Cyclops Multi-Angle Endoscope	1	CYE002
2		2	
3		3	
4		4	
5		5	

FDA document numbers of all prior related submissions *(regardless of outcome)*

1 K100577	2	3	4	5	6
7	8	9	10	11	12

Data Included in Submission

- [x] Laboratory Testing
- [ ] Animal Trials
- [ ] Human Trials

SECTION G PRODUCT CLASSIFICATION - APPLICATION TO ALL APPLICATIONS

Product Code	C.F.R. Section *(if applicable)*	Device Class
EOB	21 CFR 874.4760	[ ] Class I [x] Class II [ ] Class III [ ] Unclassified

Classification Panel

Nasopharyngoscope (Flexible or Rigid), Ear Nose & Throat

Indications *(from labeling)*

The Acclarent Cyclops Multi-Angle Endoscope is intended to provide an endoscopic means to view the nasal cavity and nasopharynx in an operating room environment.

Questions? Contact FDA/CDRH/OCE/DID at CDRH-FOISTATUS@fda.hhs.gov or 301-796-8118 336

Records processed under FOIA Request 2011-7654; Released 1/22/13

Note: Submission of this information does not affect the need to submit a 2891 or 2891a Device Establishment Registration form.	FDA Document Number *(if known)*

SECTION H — MANUFACTURING / PACKAGING / STERILIZATION SITES RELATING TO A SUBMISSION

☑ Original ☐ Add ☐ Delete	Facility Establishment Identifer (FEI) Number	☑ Manufacturer ☐ Contract Sterilizer ☐ Contract Manufacturer ☐ Repackager / Relabeler		
Company / Institution Name Acclarent, Inc.		Establishment Registration Number 3005172759		
Division Name *(if applicable)*		Phone Number *(including area code)* (650) 687-5874		
Street Address 1525-B O'Brien Drive		FAX Number *(including area code)* (650) 687-4449		
City Menlo Park		State / Province CA	ZIP/Postal Code 94025	Country USA
Contact Name Keri Yen	Contact Title Regulatory Affairs Manager		Contact E-mail Address kyen1@its.jnj.com	

(b) (4)

[redacted]

☐ Original ☐ Add ☐ Delete	Facility Establishment Identifer (FEI) Number	☐ Manufacturer ☐ Contract Sterilizer ☐ Contract Manufacturer ☐ Repackager / Relabeler		
Company / Institution Name		Establishment Registration Number		
Division Name *(if applicable)*		Phone Number *(including area code)* ( )		
Street Address		FAX Number *(including area code)* ( )		
City		State / Province	ZIP/Postal Code	Country
Contact Name	Contact Title		Contact E-mail Address	

Questions? Contact FDA/CDRH/OCE/DID at CDRH-FOISTATUS@fda.hhs.gov or 301-796-8118 337

Records processed under FOIA Request 2011-7654; Released 1/22/13

SECTION I UTILIZATION OF STANDARDS

Note: Complete this section if your application or submission cites standards or includes a *"Declaration of Conformity to a Recognized Standard"* statement.

	Standards No.	Standards Organization	Standards Title	Version	Date
1	60601-2-18	IEC	Medical electrical equipment-part 2: Particular requirements for the safety of endoscopic equipment	2	07/13/2000
2	12	AAMI TIR	Designing, testing, and labeling reusable medical devices for reprocessing in health care facilities: A guide for medical device manufacturers	2	12/23/2004
3	10993-1	ISO	Biological Evaluation of Medical Devices--Part 1: Evaluation and Testing	3	09/03/2009
4	30	AAMI TIR	A compendium of processes, materials, test methods, acceptance criteria for cleaning reusable devices	1	10/08/2003
5	ST 79	AAMI ANSI	Comprenhensive guide to steam sterilization and sterility assurance in health care facilities	3	09/04/2010
6	17664	ISO	Sterilization of medical devices--information to be provided by manufacturer for processing resterilizable	1	03/01/2004
7	17665-1	ISO	Sterilization of health care products--moist heat-part 1: requirements for the development, validation, and routine control of a sterilization process for medical devices	1	08/01/2006

Please include any additional standards to be cited on a separate page.

Public reporting burden for this collection of information is estimated to average 0.5 hour per response, including the time for reviewing instructions, searching existing data sources, gathering and maintaining the data needed, and completing reviewing the collection of information. Send comments regarding this burden estimate or any other aspect of this collection of information, including suggestions for reducing this burden to:

Food and Drug Administration
CDRH (HFZ-342)
9200 Corporate Blvd.
Rockville, MD 20850

An agency may not conduct or sponsor, and a person is not required to respond to, a collection of information unless it displays a currently valid OMB control

Questions? Contact FDA/CDRH/OCE/DID at CDRH-FOISTATUS@fda.hhs.gov or 301-796-8118 338

(b) (4)

Records processed under FOIA Request 2011-7654; Released 1/22/13

Form Approved: OMB No. 0910-0120; Expiration Date: 8/31/10

Department of Health and Human Services
Food and Drug Administration

STANDARDS DATA REPORT FOR 510(k)s

(To be filled in by applicant)

This report and the Summary Report Table are to be completed by the applicant when submitting a 510(k) that references a national or international standard. A separate report is required for each standard referenced in the 510(k).

TYPE OF 510(K) SUBMISSION

☐ Traditional ☑ Special ☐ Abbreviated

STANDARD TITLE [1]

IEC60601-1-2:2001,(b) (4) , [redacted]

Please answer the following questions	*Yes*	*No*
Is this standard recognized by FDA [2]?	☑	☐
FDA Recognition number [3]	# 5-34, 5-35	
Was a third party laboratory responsible for testing conformity of the device to this standard identified in the 510(k)?	☑	☐
Is a summary report [4] describing the extent of conformance of the standard used included in the 510(k)? If no, complete a summary report table.	☑	☐
Does the test data for this device demonstrate conformity to the requirements of this standard as it pertains to this device?	☑	☐
Does this standard include acceptance criteria? If no, include the results of testing in the 510(k).	☑	☐
Does this standard include more than one option or selection of tests? If yes, report options selected in the summary report table.	☑	☐
Were there any deviations or adaptations made in the use of the standard?	☐	☑
If yes, were deviations in accordance with the FDA supplemental information sheet (SIS) [5]?	☐	☐
Were deviations or adaptations made beyond what is specified in the FDA SIS? If yes, report these deviations or adaptations in the summary report table.	☐	☑
Were there any exclusions from the standard? If yes, report these exclusions in the summary report table.	☐	☑
Is there an FDA guidance [6] that is associated with this standard?	☐	☑
If yes, was the guidance document followed in preparation of this 510k?	☐	☐

Title of guidance: _____

[1] The formatting convention for the title is: [SDO] [numeric identifier] [title of standard] [date of publication]

[2] Authority [21 U.S.C. 360d], www.fda.gov/cdrh/stdsprog.html

[3] http://www.accessdata.fda.gov/scripts/cdrh/cfdocs/cfStandards/search.cfm

[4] The summary report should include: any adaptations used to adapt to the device under review (for example, alternative test methods); choices made when options or a selection of methods are described; deviations from the standard; requirements not applicable to the device; and the name and address of the test laboratory or certification body involved in conformance assessment to this standard. The summary report includes information on all standards utilized during the development of the device.

[5] The supplemental information sheet (SIS) is additional information which is necessary before FDA recognizes the standard. Found at http://www.accessdata.fda.gov/scripts/cdrh/cfdocs/cfStandards/search.cfm

[6] The online search for CDRH Guidance Documents can be found at www.fda.gov/cdrh/guidance.html

Questions? Contact FDA/CDRH/OCE/DID at CDRH-FOISTATUS@fda.hhs.gov or 301-796-8118 340

Records processed under FOIA Request 2011-7654; Released 1/22/13

EXTENT OF STANDARD CONFORMANCE SUMMARY REPORT TABLE

STANDARD TITLE

IEC60601-1-2:2001 (b) (4) [redacted]

CONFORMANCE WITH STANDARD SECTIONS*

SECTION NUMBER	SECTION TITLE	CONFORMANCE?
36.201	(b) (4) [redacted]	☑ Yes ☐ No ☐ N/A

TYPE OF DEVIATION OR OPTION SELECTED*

Radiated emission requirements CISPR 11, CISPR 16-1

DESCRIPTION

(b) (4) [redacted]

JUSTIFICATION

(b) (4) [redacted]

SECTION NUMBER	SECTION TITLE	CONFORMANCE?
36.202	(b) (4) [redacted] y	☑ Yes ☐ No ☐ N/A

TYPE OF DEVIATION OR OPTION SELECTED*

36.202.2 Electrostatic discharge (ESD)

DESCRIPTION

(b) (4) [redacted])

JUSTIFICATION

(b) (4) [redacted]

SECTION NUMBER	SECTION TITLE	CONFORMANCE?
36.202	Immunity	☑ Yes ☐ No ☐ N/A

TYPE OF DEVIATION OR OPTION SELECTED*

(b) (4) [redacted]

DESCRIPTION

(b) (4) [redacted]

JUSTIFICATION

(b) (4) [redacted] 1

* For completeness list all sections of the standard and indicate whether conformance is met. If a section is not applicable (N/A) an explanation is needed under "justification." Some standards include options, so similar to deviations, the option chosen needs to be described and adequately justified as appropriate for the subject device. Explanation of all deviations or description of options selected when following a standard is required under "type of deviation or option selected," "description" and "justification" on the report. More than one page may be necessary.

* Types of deviations can include an exclusion of a section in the standard, a deviation brought out by the FDA supplemental information sheet (SIS), a deviation to adapt the standard to the device, or any adaptation of a section.

Paperwork Reduction Act Statement

Public reporting burden for this collection of information is estimated to average 1 hour per response, including the time for reviewing instructions, searching existing data sources, gathering and maintaining the data needed, and completing and reviewing the collection of information. Send comments regarding this burden estimate or any other aspect of this collection of information, including suggestions for reducing this burden, to:

Center for Devices and Radiological Health
1350 Piccard Drive
Rockville, MD 20850

An agency may not conduct or sponsor, and a person is not required to respond to, a collection of information unless it displays a currently valid OMB control number.

Questions? Contact FDA/CDRH/OCE/DID at CDRH-FOISTATUS@fda.hhs.gov or 301-796-8118

Records processed under FOIA Request 2011-7654; Released 1/22/13

EXTENT OF STANDARD CONFORMANCE SUMMARY REPORT TABLE

STANDARD TITLE

IEC60601-1-2:2001/A1:2004, Medical Electrical Equipment - Part 1-2: General Requirements for Safety - Collateral standard:

CONFORMANCE WITH STANDARD SECTIONS*

SECTION NUMBER	SECTION TITLE	CONFORMANCE?
36.202	Immunity	☑ Yes ☐ No ☐ N/A

TYPE OF DEVIATION OR OPTION SELECTED *

(b) (4) [redacted]

DESCRIPTION

(b) (4) [redacted]

JUSTIFICATION

(b) (4) [redacted]

SECTION NUMBER	SECTION TITLE	CONFORMANCE?
		☐ Yes ☐ No ☑ N/A

TYPE OF DEVIATION OR OPTION SELECTED *

DESCRIPTION

JUSTIFICATION

SECTION NUMBER	SECTION TITLE	CONFORMANCE?
		☐ Yes ☐ No ☑ N/A

TYPE OF DEVIATION OR OPTION SELECTED *

DESCRIPTION

JUSTIFICATION

* For completeness list all sections of the standard and indicate whether conformance is met. If a section is not applicable (N/A) an explanation is needed under "justification." Some standards include options, so similar to deviations, the option chosen needs to be described and adequately justified as appropriate for the subject device. Explanation of all deviations or description of options selected when following a standard is required under "type of deviation or option selected," "description" and "justification" on the report. More than one page may be necessary.

* Types of deviations can include an exclusion of a section in the standard, a deviation brought out by the FDA supplemental information sheet (SIS), a deviation to adapt the standard to the device, or any adaptation of a section.

Paperwork Reduction Act Statement

Public reporting burden for this collection of information is estimated to average 1 hour per response, including the time for reviewing instructions, searching existing data sources, gathering and maintaining the data needed, and completing and reviewing the collection of information. Send comments regarding this burden estimate or any other aspect of this collection of information, including suggestions for reducing this burden, to:

Center for Devices and Radiological Health
1350 Piccard Drive
Rockville, MD 20850

An agency may not conduct or sponsor, and a person is not required to respond to, a collection of information unless it displays a currently valid OMB control number.

Questions? Contact FDA/CDRH/OCE/DID at CDRH-FOISTATUS@fda.hhs.gov or 301-796-8118 342

Records processed under FOIA Request 2011-7654; Released 1/22/13

K110097/S2

Acclarent

FDA CDRH DMC
APR 27 2011
Received

April 26, 2011

Ms. Susan Rudy, MSN, CRNP, CORLN
Food and Drug Administration
Center for Devices and Radiological Health
Document Mail Center—WO66-G609
10903 New Hampshire Avenue
Silver Spring, MD 20993-0002

RE: Response to K110097 AI Letter: (b) (4) [redacted]

Dear Ms. Rudy:

Acclarent received FDA's questions dated April 8, 2011 for the above referenced 510(k) submission and hereby submits two copies of our response.

Acclarent thanks the Agency for the interactive conference call on April 19, 2011 with you, Drs. Nandkumar and Clupper, and the guidance that you provided. The conference call was helpful in understanding the Agency's concerns.

Acclarent, Inc regards the contents of this submission to be proprietary commercial information entitled to the full confidentiality safeguards of 21 CFR Parts 20.45, 20.61 and 807.95(b).

If you have any questions regarding this submission, please do not hesitate to contact me by phone (650) 687-5874, fax (650) 687-4449 or by email at kyen1@its.jnj.com. Alternatively, you may contact Mark Bishop by phone (650) 687-5843 or by email at mbishop1@its.jnj.com. Thank you for your time and consideration.

Sincerely,

Keri Yen
Manager, Regulatory & Clinical

Questions? Contact FDA/CDRH/OCE/DID at CDRH-FOISTATUS@fda.hhs.gov or 301-796-8118 143

(b)(4) Testing Report

(b)(4) Testing Report

(b)(4) Testing Report

(b)(4) Testing Report

(b)(4) Testing Report

(b)(4) Testing Report

(b)(4) Testing Report

(b)(4) Draft

(b)(4) Draft

(b)(4) Draft

(b)(4) Draft

(b)(4) Draft

(b)(4) Draft

(b)(4) Draft

(b)(4) Draft

(b)(4) Draft

(b)(4) Draft

(b)(4) Draft

Records processed under FOIA Request 2011-7654; Released 1/22/13

[redacted]

From: Chen, Susie
Sent: Thursday, April 21, 2011 8:52 PM
To: [redacted]
Subject: RE: 510K Documents

CONFIDENTIAL

Hi [redacted]

7230CWA is a 70', 4mm X 18cm Hopkins II wide angle, autoclavable telescope.

We have 510(k) clearance K945788 addressed a 4mm X 18cm Hopkins II wide angle telescope for ENT use, see attached FDA website link,http://www.accessdata.fda.gov/scripts/cdrh/cfdocs/cfPMN/pmn.cfm?ID=107596

We also have 510(k) clearance K935279 addressed autoclavable Hopkins telescopes, see attached link, http://www.accessdata.fda.gov/scripts/cdrh/cfdocs/cfPMN/pmn.cfm?ID=102436

I hope the above information is helpful.

Susie

Susie S. Chen
Director, Regulatory & Product Legal Affairs
KARL STORZ Endoscopy-America, Inc.
2151 E. Grand Avenue
El Segundo, CA 90245
Phone: 800-421-0837 ext. 8201
Direct Line: 424-218-8201
Fax No. 424-218-8519

Questions? Contact FDA/CDRH/OCE/DID at CDRH-FOISTATUS@fda.hhs.gov or 301-796-8118 162

Records processed under FOIA Request 2011-7654; Released 1/22/13

[redacted]

From: [redacted]
Sent:
To:
Subject:

[redacted]

Begin forwarded message:

From: "Campbell, Monika" <mcampbell@ksea.com>
Date: April 19, 2011 4:06:42 PM PDT
To: [redacted]
Subject: Re: 510(k) Clearance Letter - Hopkins II Telescope

Yes, the 510(k) does cover this scope for ENT- nasal surgery procedure.

Regards,
Monika

Sent from my iPhone

On Apr 19, 2011, at 11:46 AM, [redacted] wrote:

> Hi Monika,
>
> Thanks for your prompt reply last week. You are in regulatory and you understand the details people want me to provide. I think (hope) this is the last item I will be requested. [redacted]
>
> The 510(k) letter you provided does not call out the Hopkins II rigid endoscope.
>
> Can you please re-confirm that the catalog number I gave you (7230 CWA) is covered by K945788? [redacted]
>
> Your confirmation would be greatly appreciated.
>
> Thanks.
>
> [redacted]

CONFIDENTIAL

CONFIDENTIAL

Questions? Contact FDA/CDRH/OCE/DID at CDRH-FOISTATUS@fda.hhs.gov or 301-796-8118 163

Records processed under FOIA Request 2011-7654; Released 1/22/13

ENT

DEPARTMENT OF HEALTH & HUMAN SERVICES

Public Health Service

Food and Drug Administration
9200 Corporate Boulevard
Rockville MD 20856

JAN 25 1995

Betty M. Johnson
Manager, Regulatory Affairs
Karl Storz Endoscopy America, Inc.
600 Corporate Pointe
Culver City, California 90230-7600

Re: K945788
Trade Name: KSEA Rigid Telescopes for Endoscopic Procedures (List of models and classifications enclosed)
Regulatory class: I and II
Dated: November 23, 1994
Received: November 25, 1994

Dear Ms. Johnson:

We have reviewed your Section 510(k) notification of intent to market the device referenced above and we have determined the device is substantially equivalent to a legally marketed predicate device. You may, therefore, market the device, subject to the general controls provisions of the Federal Food, Drug, and Cosmetic Act (Act). General controls provisions of the Act include requirements for registration, listing of devices, good manufacturing practices, and labeling, and prohibitions against misbranding and adulteration.

If your device is classified (see above) into either class II (Special Controls) or class III (Premarket Approval) it may be subject to such additional controls. Existing major regulations affecting your device can be found in the Code of Federal Regulations, Title 21, Parts 800 to 895. In addition, the Food and Drug Administration (FDA) may publish further announcements concerning your device in the Federal Register. Please note: this response to your premarket notification does not affect any obligation you might have under the Radiation Control for Health and Safety Act of 1968, or other Federal laws or regulations.

This letter immediately will allow you to begin marketing your device as described. An FDA finding of substantial equivalence of your device to a legally marketed predicate device results in a classification for your device and permits your device to proceed to the market, but it does not mean that FDA approves your device. Therefore, you may not promote or in any way represent your device or its labeling as being approved by FDA.

Questions? Contact FDA/CDRH/OCE/DID at CDRH-FOISTATUS@fda.hhs.gov or 301-796-8118 104

Records processed under FOIA Request 2011-7654; Released 1/22/13

If you desire specific advice on the labeling for your device, please contact the Office of Compliance, Promotion and Advertising Policy Staff (HFZ-326) at (301) 594-1342. Other general information on your responsibilities under the Act may be obtained from the Division of Small Manufacturers Assistance at its toll-free number (800) 638-2041 or at (301) 443-6597.

Sincerely yours,

for David A. Seymour

Lillian Yin, Ph.D.
Director, Division of Reproductive,
Abdominal, Ear, Nose and Throat,
and Radiological Devices
Office of Device Evaluation
Center for Devices and
Radiological Health

Questions? Contact FDA/CDRH/OCE/DID at CDRH-FOISTATUS@fda.hhs.gov or 301-796-8118

Records processed under FOIA Request 2011-7654; Released 1/22/13

STORZ
KARL STORZ ENDOSCOPY

KARL STORZ GmbH & Co.
Mittelstraße 8, D-78532 Tuttlingen, Germany
Postfach 230, D-78503 Tuttlingen, Germany
Telegramm: Endoskopie
Telefon: (07461) 70 80, Telex: 762 656 storz d
Telefax: (07461) 70 81 05

KARL STORZ
Endoscopy-America, Inc.
600 Corporate Pointe
Culver City, CA 90230-7600
Telephone: (310) 338-8100
Toll Free: (800) 421-0837
Telefax: (310) 410-5525

KARL STORZ
Endoscopy-Canada, Ltd.
2345 Argentia road, Suite 100
Mississagua, Ontario,
Canada L5N 8K4
Telephone: (905) 816-8100
Toll Free: (800) 268-4880
Telefax: (905) 858-0933

KARL STORZ
Endoscoppia Latino America
815 N.W. 57th Ave., Ste. No. 480
Miami, FL 33126-2042, USA
Telefono: (305) 262-8980
Telefax: (305) 262-8986

IM-000003-5.0 12/05

STORZ
KARL STORZ ENDOSCOPY

HOPKINS®

Telescopes

HOPKINS®

II Telescopes

Instruction Manual

Questions? Contact FDA/CDRH/OCE/DID at CDRH-FOISTATUS@fda.hhs.gov or 301-796-8118

Records processed under FOIA Request 2011-7654; Released 1/22/13

STORZ
KARL STORZ ENDOSCOPY

Important information for users of KARL STORZ instruments

Thank you for placing confidence in the name of KARL STORZ. As with all our other products, we have invested years of experience and much care in production of this telescope. You, and your organization, have chosen a modern high-quality KARL STORZ instrument.

These instructions are designed to assist you in cleaning, sterilizing, disinfecting, caring for and storing your KARL STORZ telescopes. Please read them carefully.

CAUTION: Federal (USA) law restricts this device to sale by or on the order of a physician.

Questions? Contact FDA/CDRH/OCE/DID at CDRH-FOISTATUS@fda.hhs.gov or 301-796-8118

Records processed under FOIA Request 2011-7654; Released 1/22/13

STORZ
KARL STORZ ENDOSCOPY

Illustrated Description

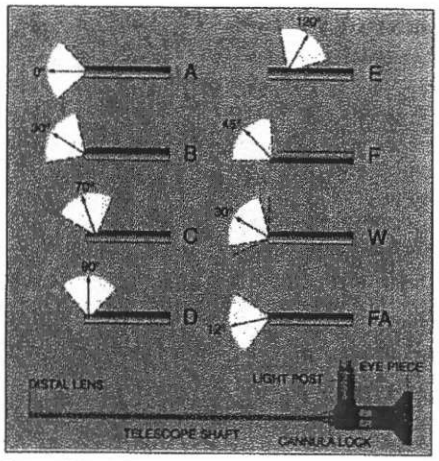

Specifications:

Letter code	Direction of View
A	0°-10° Straight Forward
B	30° Forward-Oblique
C	70° Lateral
D	90° Lateral
E	120° Retrospective
F	45°
W	30° Wide Angle
FA	12° Telescopes

Karl Storz HOPKINS® and HOPKINS® II Telescopes are provided both autoclavable and non-autoclavable. To identify the difference please note "AUTOCLAV" marked on the eyepiece.

STORZ
KARL STORZ ENDOSCOPY

Contents

Illustrative Description 4
Important Information 6
General Information for the Safe Use of Karl Storz Telescopes 7
Inspection 9
Handling 11
Operating Instructions 12
Cleaning, Disinfection and Sterilization ..13
Cleaning Instructions 13
Disinfection Instructions 15
Sterilization Instructions 18
References for Cleaning and Sterilization 24
Warranty Policy 25
Limitation of Liability 27
Appendix I 28
A. Indications and Contraindications for Urology 28
B. Indications for General Surgery ...28
C. Indications for Thoracoscopy 28
D. Indications for Ear, Nose and Throat 29
E. Indications for Arthroscopy 29
F. Indications for Plastic Surgery 29
G. Indications and Contraindications for Gynecology 30
H. Indications and Contraindications Diagnostic Hysterscopy 31
I. Indications and Contraindications Operative Hysterscopy 32
J. Indications & Contraindications for Neurology 34
K. Indications & contraindicatins for Dentistry 35
Appendix II 36
A. Cleaning Accessories 36
Quick Reference 37

Questions? Contact FDA/CDRH/OCE/DID at CDRH-FOISTATUS@fda.hhs.gov or 301-796-8118

Records processed under FOIA Request 2011-7654; Released 1/22/13

STORZ
KARL STORZ ENDOSCOPY

Important Information for users of KARL STORZ instruments

IMPORTANT

Please read this entire manual carefully before using Karl Storz HOPKINS® and HOPKINS® II Telescopes. Failure to follow the instructions, cautions and warnings presented in this manual may result in serious consequences to the patient.

The procedures for proper handling and care of Karl Storz HOPKINS® and HOPKINS® II Telescopes are described in this manual. The Karl Storz HOPKINS® and HOPKINS® II Telescopes are delicate optical instruments and should be handled with care. Improper use during surgical procedures will result in damage or breakage of the telescope. Karl Storz Endoscopy-America, Inc. assumes no liability if the telescopes are misused, mishandled or otherwise abused. Proper handling and care, as described in this manual, will prolong the life of the Karl Storz HOPKINS® and HOPKINS® II Telescopes.

Recommended procedures for inspecting and preparing the telescopes for use are described in this manual. The manual does not describe how the actual procedure is to be performed. Endoscopic procedures should be performed only by physicians who have training in endoscopic techniques. Consult medical literature relative to techniques, complications and hazards of endoscopic procedures.

A thorough understanding of the principles and techniques involved in endoscopic and electrosurgical procedures is essential to avoid shock and burn hazards to both the patient and physician.

The Karl Storz HOPKINS® and HOPKINS® II Telescopes are compatible with any light sources and light cables marketed by Karl Storz Endoscopy America, Inc.

CAUTION: The Karl Storz HOPKINS® and HOPKINS® II Telescopes are provided NON-STERILE, and must be cleaned, disinfected and/or sterilized prior to the initial use and before each subsequent use.

STORZ
KARL STORZ ENDOSCOPY

General Information for the Safe Use of Karl Storz Telescopes

User qualifications

These instruments may only be used by licensed physicians and qualified medical personnel who have been trained in their use.

Warnings and precautions

Please read this manual carefully. It is very important that the user be thoroughly familiar with the operation of the instrument prior to use on a patient. The terms "Warning," "Caution" and "Note" are intended to draw your attention to important parts of the instruction manual. All warnings, precautions and notes should be thoroughly reviewed prior to use of the instrument. Close attention to all warnings, precautions and notes is necessary for safe and effective operation of the device.

Definitions

WARNING: A warning indicates that the personal safety of the patient or physician may be compromised. Disregarding the warning may result in serious injury to the patient or the physician.

Caution: A caution indicates that the device may be damaged if the caution is disregarded.

Note: A note provides additional information regarding the safe operation of the device.

Description of Device

The Karl Storz HOPKINS® and HOPKINS® II telescopes are reusable rod lens endoscopes consisting of an eyepiece lens, a light post connection for fiber optic light cables with screw-on adapters which will

Questions? Contact FDA/CDRH/OCE/DID at CDRH-FOISTATUS@fda.hhs.gov or 301-796-8118

Records processed under FOIA Request 2011-7654; Released 1/22/13

General Information for the Safe Use of Karl Storz Telescopes (Continued)

accommodate light cables from other manufacturers. A shaft made of non-corrosive material encloses the rod-lens system and a built-in fiber optic light carrier. See page 4 for identification of parts.

Indications

Karl Storz HOPKINS® and HOPKINS® II telescopes are to be used for visualization of the surgical site during diagnostic and therapeutic endoscopic procedures. See Appendix I for specific indications for use.

Contraindications

Karl Storz HOPKINS® and HOPKINS® II telescopes are contraindicated for use when, in the opinion of a qualified physician, such use would create a condition that would be dangerous for the patient. See Appendix I for specific contraindications.

WARNING: Karl Storz HOPKINS® and HOPKINS® II telescopes are provided NON-STERILE and must be thoroughly cleaned and sterilized according to validated infection control procedures prior to use and subsequent reuse.

WARNING: High level disinfection is recommended ONLY for telescopes which come into contact with mucous membranes or minor skin breaches. Disinfection is NOT recommended for telescopes to be used for laparoscopic, arthroscopic, hysteroscopic, Ob/Gyn, plastic, reconstructive, aesthetic, or neurology surgery procedures.

WARNING: Always adjust the light source to the minimum illumination intensity necessary to achieve optimum illumination of the endoscopic scene, either by direct vision or coupled to a video camera. The higher the light intensity setting of the light source, the greater the heat energy that will be generated at the distal end of the telescope.

General Information for the Safe Use of Karl Storz Telescopes (Continued)

WARNING: Never place the end of a fiber optic cable or telescope connected to a light cable on or under a surgical drape while the light source is activated. The intensity of the light may cause burns to the patient and/or the surgical drape. Turn the light source to standby or initial mode when the telescope is not in use.

WARNING: Do not use telescopes with visible signs of damage.

Caution: DO NOT steam sterilize Karl Storz HOPKINS® or HOPKINS® II non-autoclavable telescopes! Irreparable damage will occur.

Caution: Do not "FLASH" sterilize Karl Storz HOPKINS® or HOPKINS® II telescopes.

Inspection

Inspection of the HOPKINS® and HOPKINS® II Telescopes: Inspection of the Karl Storz HOPKINS® and HOPKINS® II Telescopes for signs of damage should be performed before and after every surgical procedure.

Working Shaft

Inspect the entire surface of the working shaft of the telescope for any signs of damage such as dents, bends or scratches.

Objective lens and Eyepiece

Inspect the objective lens (distal tip) and eyepiece for scratches, chips, fingerprints or residual debris by observing the reflected light on the surfaces of the eyepiece and objective lens. These surfaces should be smooth and shiny. To check for clarity of view slowly rotate the telescope while looking through the eyepiece. A partially or completely obstructed view may be the result of a damaged lens within the eyepiece or within the telescope shaft. Foggy images may result from moisture entering a damaged seal around the lens.

Questions? Contact FDA/CDRH/OCE/DID at CDRH-FOISTATUS@fda.hhs.gov or 301-796-8118

Records processed under FOIA Request 2011-7654; Released 1/22/13

Inspection (Continued)

CAUTION: Do not use telescopes if signs of damage are present.

CAUTION: The telescope must be replaced if the image is clouded, distorted or there is no image.

CAUTION: The telescopes are provided NON-STERILE and must be cleaned, disinfected and/or sterilized prior to initial use and subsequent reuse.

WARNING: DO NOT STEAM STERILIZE KARL STORZ HOPKINS® and HOPKINS® II NON-AUTOCLAVABLE TELESCOPES! IRREPARABLE DAMAGE WILL OCCUR.

WARNING: Do Not "FLASH" sterilize any Karl Storz HOPKINS® and HOPKINS® II telescopes.

If there is any doubt about whether the telescopes are safe to use, please contact your sales representative or the Technical Support Staff directly at KSEA (1-800-421-0837).

Handling of HOPKINS® and HOPKINS® II Telescopes

Karl Storz HOPKINS® and HOPKINS® II Telescopes are delicate instruments. To ensure the long lasting quality of the telescope, please follow the handling instructions described below.

1. To prevent breakage, telescopes should be supported by firmly grasping the eyepiece end. Never handle the telescope by the distal end alone.
2. Never bend the stainless steel shaft. This could lead to breaks or cracks in the rod-lens system.
3. Handle the telescope with care. Mishandling of the telescope, particularly at the distal end, may result in damage or cracks in the telescope. Damage to the telescope may allow liquid and other materials to penetrate causing unclear images.
4. When cleaning, disinfecting and sterilizing telescopes, Karl Storz recommends that they be handled separately from other instruments.
5. Protective cases, which are suitable for storage, transport and sterilization, are available in various lengths for Karl Storz HOPKINS® and HOPKINS® II Telescopes.

Questions? Contact FDA/CDRH/OCE/DID at CDRH-FOISTATUS@fda.hhs.gov or 301-796-8118

Records processed under FOIA Request 2011-7654; Released 1/22/13

Operating Instructions

1. Be sure that the telescopes have been properly cleaned, disinfected and/or sterilized prior to use. (See Cleaning, Disinfection and Sterilization section for detailed procedures).
2. Inspect the telescope for damage and proper function as described above.
3. Operate all video and light source equipment in accordance with manufacturer's instructions.

WARNING: Always adjust the light source to the minimum illumination intensity necessary to achieve optimum illumination of the endoscopic scene, either by direct vision or coupled to a video camera. The higher the light intensity setting of the light source, the greater the heat energy that will be generated at the distal end of the telescope.

WARNING: Never place the end of a fiber optic light cable or a telescope connected to a light cable on or under a surgical drape while the light source is activated. The intensity of the light may cause burns to the patient and/or the surgical drape. Turn the light source to standby or initial mode when the telescope is not in use.

4. Prepare the surgery entry site in accordance with proper endoscopic surgical techniques. Consult the appropriate medical literature.
5. Attach the light cable to the fiber optic light post on the telescope. Karl Storz recommends that the appropriate size light cable be used to minimize the heat energy generated from the light source. Use of the appropriate size light cable will reduce the risk of patient burns, as well as the risk of igniting flammable material.

Telescope Diameter	Light Cable Diameter
4.0 mm and less	2.5 mm
6.0 mm and less	3.5 mm
Larger then 6.0 mm	4.8 mm

Cleaning , Disinfection and Sterilization Instructions

WARNING: The Karl Storz HOPKINS® and HOPKINS® II Telescopes should be thoroughly cleaned, disinfected and/or sterilized according to validated infection control procedures prior to use and subsequent reuse.

CAUTION: DO NOT soak the telescope in any solution (including water) for longer than 60 minutes.

Preparation for Cleaning and Sterilization

1. Disconnect the light cable from the telescope.
2. Remove the light cable adapters.
3. Place telescope in a plastic container and soak with a neutral pH (pH 6.0 to 8.0) enzymatic cleaning solution (e.g., Enzol, Metrizyme or the equivalent per manufacturer's instructions) immediately after use to prevent blood, protein and other contaminants from drying onto the telescope. Do not soak telescopes with other instruments to prevent damage to the telescope.

Water Quality Requirements

Distilled water is recommended for cleaning and rinsing of telescopes.

Cleaning Instructions for HOPKINS® AND HOPKINS® II Telescopes

CAUTION: WEAR PROTECTIVE GLOVES, CLOTHING AND A FACE MASK FOR CLEANING OF CONTAMINATED TELESCOPES.

CAUTION: DO NOT clean the Karl Storz HOPKINS® and HOPKINS® II Telescopes in an instrument washing machine or ultrasonic bath.

Questions? Contact FDA/CDRH/OCE/DID at CDRH-FOISTATUS@fda.hhs.gov or 301-796-8118

172

Records processed under FOIA Request 2011-7654; Released 1/22/13

Cleaning , Disinfection and Sterilization Instructions (Continued)

CAUTION: The recommended sterilization parameters are only valid with sterilization equipment that is properly maintained and calibrated.

1. Remove light cable adapters before cleaning and sterilization. Do not clean or rinse telescopes with other instruments to prevent damage to the telescope.
2. Remove any residual blood, protein material and contaminants with sponges, soft cloths or a cotton cloth applicator using a neutral pH (pH 6.0 to 8.0) enzymatic cleaning solution (e.g. Enzol, Metrizyme or equivalent per maufacturer's instructions) and distilled water. Karl Storz does not recommend the use of detergents alone, as they contain high concentrations of surfactants which can leave a film on the telescopes. See Appendix II for available Karl Storz cleaning accessories.
3. Clean the lenses and fiber optic inlet post with alcohol wipes or sterile cotton tip applicators with 70% alcohol to remove any residue or film left after cleaning.
4. Triple-rinse all telescopes with distilled water, for a minimum of one minute for each rinse. The rinse water should be discarded at the end of each rinse, as it will be contaminated with the cleaning solution. Thorough rinsing of the telescope is necessary for removing any debris or detergent which could interfere with sterilization.
5. Dry the telescope with a lint-free soft cloth or filtered compressed air.
6. Special Instructions for cleaning autoclaveable telescopes: Telescopes that have been autoclaved many times may develop deposits on the glass surfaces. To remove the deposits, clean the telescope with Karl Storz cleaning paste

Cleaning , Disinfection and Sterilization Instructions (Continued)

(27661). Put a small amount of cleaning paste on a moist cotton swab and lightly spread it on the glass surface. Rub gently to remove any stubborn deposits.

7. After polishing with the cleaning paste, thoroughly rinse the glass surfaces with water. Clean the surfaces with 70% alcohol or alcohol wipes to remove all traces of the cleaning paste. It may be necessary to repeat steps 2 to 5 above to ensure all of the cleaning paste is removed.

Caution: Cleaning with the cleaning paste should only be done if the image is cloudy (after approximately 10 to 20 sterilizations) and not as part of the routine cleaning.

8. After cleaning, inspect the telescope for cleanliness and damage as described above. (See Inspection Section).

Disinfection Instructions for Karl Storz Telescopes

WARNING: High level disinfection is recommended ONLY for telescopes which come into contact with mucous membranes or minor skin breaches. Disinfection is NOT recommended for telescopes to be used in any laparoscopic, arthroscopic, OB/GYN, plastic, reconstructive, aesthetic, or neurology surgical procedures.

CAUTION: Any deviations from the recommended disinfection parameters must be validated by the user.

CAUTION: Before disinfection, the instruments must be thoroughly cleaned, rinsed, and dried.

CAUTION: To avoid damage to the instruments, do not immerse the devices in disinfectant solution for longer than one hour.

Karl Storz HOPKINS® and HOPKINS® II Telescopes may be chemically disinfected

Questions? Contact FDA/CDRH/OCE/DID at CDRH-FOISTATUS@fda.hhs.gov or 301-796-8118

Records processed under FOIA Request 2011-7654; Released 1/22/13

Cleaning , Disinfection and Sterilization Instructions (Continued)

using high-level disinfectant solutions containing a 2% concentration of glutaraldehyde (e.g. CIDEX®, a 14-day glutaraldehyde solution) or 0.55% *ortho*-phthalaldehyde (e.g. CIDES OPA, a 14-day solution).

Karl Storz does not recommend the use of CIDEX® PLUS or other 28-day glutaraldehyde solutions, as they contain high concentrations of surfactants, which may dry and crystallize on the telescopes if they are not thoroughly rinsed. The crystalline form of the surfactant can become conductive to electricity providing a pathway for arcing. Glutaraldehyde solutions with concentrations greater than 2% should be avoided, as a higher percentage of glutaraldehyde may damage the telescopes.

1. Place the telescopes into separate plastic containers. Plastic containers should be used to avoid scratching of the instruments and to eliminate electrolytic corrosion, which may occur when dissimilar metals are soaked in the same solution. Do not soak telescopes with other instruments to prevent potential damage.
2. Prepare the disinfecting solution for use:

   2% Glutaraldehyde Solution (e.g. CIDEX®)

   Activate the glutaraldehyde solution by adding the activator solution. Shake well. Check the pH of the glutaraldehyde solution to be sure that it is between 8.2 and 8.9 for optimal antimicrobial activity. Record the date of activation and the expiration date on the container.

   0.55% *ortho*-Phthalaldehyde (e.g. CIDEX OPA)

   No activation is necessary. Record the date the solution was poured out of the original container.

Cleaning , Disinfection and Sterilization Instructions (Continued)

3. Completely immerse the device; filling the instrument and irrigation channels with disinfectant solution. A large Luer tip syringe is useful for drawing disinfectant solution into the instrument channel.
4. Utilize the following disinfection conditions to achieve high-level disinfection:

   2% Glutaraldehyde Solution (e.g. CIDEX®)

   Completely immerse the telescope in the undiluted 2% glutaraldehyde solution for a minimum of **45 minutes at 25°C (77°F),** not to exceed 1 hour.

   0.55% *ortho*-Phthalaldehyde (e.g. CIDEX OPA)

   Completely immerse the telescope in the undiluted solution for a minimum of **12 minutes at 20°C (68°F)** or higher, not to exceed 1 hour.
5. After disinfection is completed, remove the telescope from the disinfectant solution and completely immerse in a large volume of sterile water. Thoroughly rinse the telescopes three times for a minimum of 1 minute per rinse. Flush a minimum of 500 mL of water through all lumens during each separate rinse. Discard the water after each rinse, as it will be contaminated with the disinfectant. Use fresh sterile water for each rinse. Thorough rinsing of the telescope is essential for preventing the toxic effects of any residual disinfectant solution.
6. Please refer to the disinfectant manufacturer's Instructions-for-Use for more detailed information regarding the use of the disinfectant solution, including proper rinsing techniques.
7. Dry the telescope with a lint-free sterile cloth or filtered compressed air. To thoroughly dry the instrument and irrigation channels, flush the channels with 70% isopropyl alcohol.

Questions? Contact FDA/CDRH/OCE/DID at CDRH-FOISTATUS@fda.hhs.gov or 301-796-8118

Records processed under FOIA Request 2011-7654; Released 1/22/13

Cleaning , Disinfection and Sterilization Instructions (Continued)

CAUTION: Light transmission could be considerably impaired due to incomplete rinsing. Any disinfectant or cleaning solution residues on the light post could burn into the light post when the fiber optic light cable is connected

Sterilization Instructions for Telescopes

Routine ethylene oxide (EtO) sterilization is recommended for initial and subsequent sterilization of all HOPKINS® and HOPKINS® II Telescopes. To achieve the desired sterility assurance level (SAL) of 10^{-6}, Karl Storz recommends the following EtO, steam, STERRAD and Steris sterilization methods.

WARNING: DO NOT STEAM STERILIZE KARL STORZ HOPKINS® and HOPKINS® II NON-AUTOCLAVABLE TELE-

SCOPES! IRREPARABLE DAMAGE WILL OCCUR!

WARNING: Do Not "FLASH" sterilize any Karl Storz HOPKINS® or HOPKINS® II telescopes.

CAUTION: Before sterilization, the HOPKINS® and HOPKINS® II Telescopes must be thoroughly cleaned and all organic material, blood and cleaning solution completely removed.

CAUTION: During sterilization, telescopes should not come into direct contact with metal.

CAUTION: The recommended sterilization parameters are only valid with sterilization equipment that is properly maintained and calibrated.

Cleaning , Disinfection and Sterilization Instructions (Continued)

Ethylene Oxide (EtO) Gas Sterilization

1. Place the HOPKINS® and HOPKINS® II Telescopes in a sterilization tray.
2. All sterilization cycles must include a pre-conditioning cycle:
   Temperature: 130 ± 5°F
   Time: 30 minutes
3. Karl Storz has validated the following parameters for Ethylene Oxide (EtO) sterilization:

Validated Parameters for Ethylene Oxide (EtO) Gas Sterilization

Gas Mixture	EtO: HCFC*
Temperature	130 ± 5°F
Relative Humidity	60 ± 20%
Pressure	8 to 10 psi
Exposure Time	120 minutes
EtO Concentration	600 ± 30 mg/L

* Gas mixture composed of 10% ethylene oxide and 90% chlorotetrafluoroethane (HCFC-124; percent by weight)

4. Aeration of the HOPKINS® and HOPKINS® II Telescopes can be accomplished in any aeration chamber at a temperature of 120 to 130°F for 12 hours.

Maximum acceptable levels (per ANSI/AAMI/ISO 10993-7) of residues following EtO sterilization are as follows:

ethylene oxide: ≤ 20 mg
ethylene chlorohydrin: ≤ 12 mg

Questions? Contact FDA/CDRH/OCE/DID at CDRH-FOISTATUS@fda.hhs.gov or 301-796-8118

Records processed under FOIA Request 2011-7654; Released 1/22/13

Cleaning , Disinfection and Sterilization Instructions (Continued)

STERRAD® System

Karl Storz telescopes are compatible with the STERRAD 50, 100S, 200, and NX sterilization systems. The STERRAD® System utilizes a syngerism between hydrogen peroxide and low temperature gas plasma to produce a rapid (75 minutes), low temperature (50 - 104°F), low moisture inactivation of microorganisms.

WARNING: Consult STERRAD labeling for lumen size restrictions.

CAUTION: STERRAD® sterilization may cause cosmetic changes to the devices that do not necessarily impact the functionality of the device.

CAUTION: All telescopes must be thoroughly DRIED before loading into the STERRAD® System chamber. Loads containing moisture may cause a cycle cancellation.

CAUTION: Use only STERRAD® Instrument trays in the sterilization chamber. These trays are specially designed to allow the plasma to surround the items.

CAUTION: Use only polypropylene sterilization wrap and polyolefin pouches. Do not use paper pouches or sterilization wraps containing wood pulp or cotton.

CAUTION: Any deviations from the recommended STERRAD® System sterilization parameters must be validated by the user.

Note: Instruments that Karl Storz has determined to be compatible with the STERRAD® System sterilization process have been validated.

1. Clean and thoroughly dry all instruments.
2. Place the telescopes in STERRAD® instrument trays, wrap in polypropylene sterilization wrap or enclose in polyolefin pouches. Place STERRAD® indicator strips in all trays and pouches.
3. Fully load the STERRAD® sterilizer, arranging the items such that the hydrogen peroxide plasma can surround them.

Cleaning , Disinfection and Sterilization Instructions (Continued)

Do not allow any items to touch the wall of the sterilizer.

4. Please consult the STERRAD® System Operators Manual for detailed instructions for use.

Sterilization with the STERIS PROCESS™

The STERIS PROCESS™ is a sterile processing method for immersible surgical and diagnostic devices. The STERIS® System utilizes a liquid chemical process (primarily buffered peracetic acid) for the rapid, low temperature, destruction of microorganisms on the surfaces of surgical instruments and devices. Please consult the STERIS® operator's manual for safe handling instructions for the STERIS® sterilant.

WARNING: Failure to thoroughly clean telescopes may result in an ineffective sterile process.

WARNING: Failure to properly position telescopes so that all surfaces will be exposed to the sterilant or overloading the processing container may result in an ineffective sterile process and/or damage to the devices.

WARNING: Do not use the STERIS system to reprocess Karl Storz HOPKINS® and HOPKINS® II Telescopes with instrument channels. Sterility of Karl Storz HOPKINS® and HOPKINS® II Telescopes with instrument channels cannot be assured using the STERIS PROCESS™.

WARNING: Use only STERIS® processing containers to ensure proper sterilization of the telescopes.

WARNING: DO NOT use the STERIS® system for telescopes that cannot be immersed in liquid.

WARNING: Always verify that the sterilant container is empty after the cycle is complete. If the sterilant

Questions? Contact FDA/CDRH/OCE/DID at CDRH-FOISTATUS@fda.hhs.gov or 301-796-8118

Records processed under FOIA Request 2011-7654; Released 1/22/13

Cleaning , Disinfection and Sterilization Instructions (Continued)

container is NOT empty, then the load CANNOT be considered sterile.

WARNING: Telescopes are NOT sterilized and/or adequately rinsed when a sterile processing cycle is CANCELED.

1. Be sure that all telescopes are completely clean using the methods described in the cleaning section of this manual.
2. Visually inspect and test the telescope to ensure that it is working properly before processing in the STERIS processor.
3. Position the telescope in the STERIS® tray to ensure that all surfaces will be exposed to the sterilant. All light cable adapters should be removed from the light post before processing.
4. Please consult the STERIS® operator's manual for more detailed instruction for use of the STERIS® processor.
5. The telescopes are ready to use immediately at the completion of the STERIS® cycle.
6. Contact STERIS® Corporation for the most current STERIS® System processing options for Karl Storz telescopes.

Steam Sterilization

WARNING: ONLY KARL STORZ HOPKINS® and HOPKINS® II TELESCOPES marked "AUTOCLAV" can be steam sterilized.

WARNING: Do Not "FLASH" sterilize KARL STORZ HOPKINS® and HOPKINS® II TELESCOPES.

CAUTION: Sudden changes in temperature may fracture the glass components of telescopes. Do not immediately expose telescopes to air after removal from the autoclave.

Cleaning , Disinfection and Sterilization Instructions (Continued)

CAUTION: Never attempt to cool telescopes by pouring cool, sterile liquid over the telescope. Forced cooling will cause severe damage to the telescope.

CAUTION: Before steam sterilization all telescopes must be thoroughly cleaned and any organic material, blood and cleaning solution completely removed.

1. Place the HOPKINS® or HOPKINS® II Telescopes marked "autoclav" in a sterilization tray.
2. Karl Storz has validated the following steam sterilization parameters:

- **Pre-vacuum:**

Pre-vacuum or high vacuum sterilization consists of four basic phases: a conditioning phase, an exposure phase, an exhaust phase and a drying phase. The conditioning phase removes air from the chamber by pulling a vacuum and then warms the instruments by injecting steam. Sterilization occurs during the exposure phase when the chamber reaches a temperature of 270°F and pressure of 27 psi. The exposure phase in a pre-vacuum type of sterilizer is 4.0 minutes. The exhaust phase removes the steam from the chamber. The drying phase is accomplished by pulling an additional vacuum and allowing the instruments to dry under vacuum for approximately 20 minutes. The following conditions have been used to validate sterilization procedures in a pre-vacuum sterilizer:

Temperature:	270 to 272°F
Pressure:	27 psi
Exposure Time:	4 minutes for all instruments

3. Trays should be positioned in the sterilizer so that there is adequate circulation and penetration of steam, air removal and condensate drainage. A loosely loaded sterilizer allows the best penetration of sterilant.

Questions? Contact FDA/CDRH/OCE/DID at CDRH-FOISTATUS@fda.hhs.gov or 301-796-8118

Records processed under FOIA Request 2011-7654; Released 1/22/13

Cleaning , Disinfection and Sterilization Instructions (Continued)

4. At the completion of the steam sterilization cycle, all telescopes should remain untouched until adequately cooled.

References for Cleaning and Sterilization

1. Gruendemann, B.J. and Meeker, M.H. Alexander's Care of the Patient in Surgery, 7th edition. The C.V. Mosby Company, St. Louis, Mo. 1983.
2. Association for the Advancement of Medical Instrumentation. Designing, Testing and Labeling Reusable Medical Devices for Reprocessing in Health Care Facilities: A Guide for Device Manufacturers. AAMI TIR No. 12-1994.
3. The Difficulty of Reprocessing Reusable Rigid Laparoscopic Forceps and Other Endoscopic Accessories: Are Disposables the Answer? Health Devices, Vol. 23, Nos. 1-2, pp. 57-58, 1994.
4. Descoteaux, J-G, Poulin, E.C., Julein, M. and Guidoin, R. Residual Organic Debris on Processed Surgical Instruments. AORN Journal Vol. 62, No. 1, pp. 23 - 29, 1995.

Warranty Policy

Except as otherwise provided herein and/or by the applicable warranty information for a specific product or type of product, all Karl Storz-branded products are generally warranted to be in good working order at the date of delivery and free from defects in workmanship and materials, for one (1) year from date of delivery. However, since some products carry a shorter or a longer warranty period, Customer should check with Customer Support or all product specific literature, instruction manual and/or labeling for the exact warranty period. Any such product(s) with a defect occurring during the applicable warranty period will be promptly replaced or, at the sole discretion of KSEA, repaired at no charge to Customer.

THIS WARRANTY IS IN LIEU OF ALL OTHER WARRANTIES, EXPRESS, IMPLIED AND/OR STATUTORY, INCLUDING, BUT NOT LIMITED TO WARRANTIES OF MERCHANTABILITY, FITNESS AND/OR OF SUITABILITY FOR A PARTICULAR PURPOSE, WITH RESPECT TO ALL KARL STORZ PRODUCTS OR SERVICES, INCLUDING ANY PATENTS OR TECHNOLOGY RELATIVE THERETO. ANY AND ALL OTHER WARRANTIES, REPRESENTATIONS AND/OR GUARANTEES, OF ANY TYPE, NATURE OR EXTENT, BE IT IMPLIED, EXPRESS AND/OR WHETHER ARISING UNDER OR AS A RESULT OF ANY STATUTE, LAW, COMMERCIAL USAGE, CUSTOM, TRADE OR OTHERWISE, ARE HEREBY EXPRESSLY EXCLUDED AND DISCLAIMED.

Any contrary course of performance by and between the parties will not modify any representations and/or warranties set forth in the within Terms and Conditions. KSEA neither assumes nor authorizes any person to assume for it any other liabilities in conjunction with and/or related to the sale and/or use of its products. To ensure proper use, handling and care of Karl Storz products, Customer should consult the product specific literature,

Questions? Contact FDA/CDRH/OCE/DID at CDRH-FOISTATUS@fda.hhs.gov or 301-796-8118

Records processed under FOIA Request 2011-7654; Released 1/22/13

Warranty Policy (Continued)

instruction manual, and/or labeling included with the product or otherwise available. Repairs, modifications or alterations of Karl Storz products, performed by any person or entity, other than by KSEA or an authorized repair facility of KSEA, nullifies and otherwise voids all applicable Karl Storz warranties. Repair or replacement of a Karl Storz product shall not extend the term of any applicable warranty. The remedies provided in the within Terms and Conditions are Customer's exclusive remedies under this Warranty Policy.

STORZ
KARL STORZ ENDOSCOPY

Limitation of Liability

KSEA is not liable, directly or by way of indemnity, either expressly or impliedly, for: (1) any damages which might arise or be caused, whether by the Customer or by any of the users of the products provided by KSEA, as a result of, in connection with, or otherwise attributable to: (a) misuse, abuse, mishandling and/or improper operation; (b) repairs, servicing, modifications and/or alterations performed by any person or entity, other than KSEA or an authorized repair facility of KSEA; (c) use in combination with adaptors, accessories and/or equipment from other manufacturers unless authorized or recommended by KSEA or, (d) use in any manner other than those for which such products are designed and are otherwise intended to be used; and, (2) any special, incidental, consequential, punitive, exemplary or indirect damages, including but not limited to alleged damages for delayed shipment, non-delivery, product failure, product design or production, inability to use such products or services, loss of future business (lost profits), or from any other cause, whatsoever, in connection with or arising from the purchase, sale, lease, rental, installation or use of such Karl Storz products or with respect to the within Terms and Conditions or with respect to any the terms of any agreement of which these provisions are a part.

SOME JURISDICTIONS DO NOT ALLOW EXCLUSIONS AND DISCLAIMERS OF CERTAIN WARRANTIES OR LIMITATIONS OF LIABILITY, SO THE LIMITATIONS AND/OR EXCLUSIONS, SET FORTH IN THE WITHIN TERMS AND CONDITIONS (MORE SPECIFICALLY IN THE "WARRANTY POLICY" AND "LIMITATION OF LIABILITY" SECTIONS HEREOF), MAY NOT APPLY. IN THAT EVENT, KSEA'S LIABILITY WILL BE LIMITED TO THE GREATEST EXTENT PERMITTED BY LAW IN THE SUBJECT JURISDICTION.

Questions? Contact FDA/CDRH/OCE/DID at CDRH-FOISTATUS@fda.hhs.gov or 301-796-8118

Records processed under FOIA Request 2011-7654; Released 1/22/13

STORZ
KARL STORZ ENDOSCOPY

Appendix I

Urology

Indications for Use: The Karl Storz HOPKINS® and HOPKINS® II Telescopes are to be used for visualization of the surgical site during diagnostic and therapeutic urology procedures.

Contraindications: The Karl Storz HOPKINS® and HOPKINS® II Telescopes are contraindicated for use when, in the opinion of a qualified physician, such use would create a condition that would be dangerous for the patient.

General Surgery

Indications for Use: The Karl Storz HOPKINS® and HOPKINS® II Telescopes are for use during general endoscopic and laparoscopic surgical procedures (diagnostic and therapeutic).

Contraindications: The Karl Storz HOPKINS® and HOPKINS® II Telescopes are contraindicated for use when, in the opinion of a qualified physician, such use would create a condition that would be dangerous for the patient.

Thoracoscopy

Indications for Use: The Karl Storz HOPKINS® and HOPKINS® II Telescopes are for use to view the thoracic cavity during diagnostic and operative endoscopic procedures.

Contraindications: The Karl Storz HOPKINS® and HOPKINS® II Telescopes are contraindicated for use when, in the opinion of a qualified physician, such use would create a condition that would be dangerous for the patient.

STORZ
KARL STORZ ENDOSCOPY

Appendix I (Continued)

Ear, Nose and Throat

Indications for Use: The Karl Storz HOPKINS® and HOPKINS® II Telescopes are for use to view the nasal, sinus and/or pharyngeal cavities during diagnostic and operative endoscopic procedures.

The Karl Storz HOPKINS® and HOPKINS® II Telescopes are for use to view the bronchi, trachea and esophagus during diagnostic and operative endoscopic procedures.

The Karl Storz HOPKINS® and HOPKINS® II Telescopes are for use to view the tympanic membrane and middle ear during diagnostic and operative endoscopic procedures.

The Karl Storz HOPKINS® and HOPKINS® II Telescopes are for use to view the larynx during diagnostic and operative endoscopic procedures.

Contraindications: The Karl Storz HOPKINS® and HOPKINS® II Telescopes are contraindicated for use when, in the opinion of a qualified physician, such use would create a condition that would be dangerous for the patient.

Arthroscopy

Indications for Use: The Karl Storz HOPKINS® and HOPKINS® II Telescopes are for use during diagnostic and therapeutic arthroscopic surgical procedures in the knee, shoulder, elbow, wrist, ankle, jaw and hip.

Contraindications: The Karl Storz HOPKINS® and HOPKINS® II Telescopes are contraindicated for use when, in the opinion of a qualified physician, such use would create a condition that would be dangerous for the patient.

Plastic Surgery

Indications for Use: The Karl Storz HOPKINS® and HOPKINS® II Telescopes are for use during endoscopic plastic, reconstructive and aesthetic surgical procedures.

Contraindications: The Karl Storz HOPKINS® and HOPKINS® II Telescopes are contraindicated for use when, in the opinion of a qualified physician, such use would create a condition that would be dangerous for the patient.

Questions? Contact FDA/CDRH/OCE/DID at CDRH-FOISTATUS@fda.hhs.gov or 301-796-8118

Records processed under FOIA Request 2011-7654; Released 1/22/13

Appendix I (Continued)

Gynecology (Laparoscopy)

Indications for Use:

- unexplained pelvic pain (acute, chronic)
- infertility work-up
- tubal sterilization
- unexplained primary or secondary amenorrhea
- diagnosis and/or treatment of ectopic pregnancy
- evaluation, diagnosis and/or treatment or small pelvic tumors, including myomata
- evaluation of congenital anomalies of the pelvic organs
- retrieval of small foreign bodies
- determination of the presence and extent of pelvic endometriosis
- determination of the presence and extent of pelvic inflammatory disease
- laparoscopic assisted vaginal hysterectomy
- evaluation of ovarian endocrinopathy
- visualization, diagnosis and/or treatment of perforate abdominal organs

Strong Relative Contraindications:

- Class IV cardiac decompensation
- infection with acute peritonitis
- bowl obstruction
- ileus
- intraperitoneal hemorrhage
- diaphragmatic hernia

Other Relative Contraindications:

- cardiac disease
- diaphragmatic hernia
- previous abdominal surgery
- obesity
- thin nulliparious patient
- pregnancy greater than 16 week size or abdominal mass of comparable size
- chronic obstructive lung disease
- liver failure with established collateral vessels
- invasive carcinoma of the cervix
- medical contraindication
- intolerance to anesthesia

WARNINGS:

For use only by clinicians trained in laparoscopy

Appendix I (Continued)

Precautions:

- Ultrasonography prior to laparoscopy may identify clinical conditions that will alter patient management.
- Abdominal puncture sites 10 mm or greater (for the introduction of auxiliary instrumentation) may be a source of herniation.
- Lasers and electrosurgical probes should not be activated simultaneously. Further, when one is activated, the tip of the other should be completely retracted. This avoids deflection of the energy to the other tip.
- Electrosurgical Safety: Inadvertent burns can occur when the appropriate patient return path is obstructed. Inadvertent burns may also occur as a result of capacitive coupling.

WARNING: Although not reported in the current literature with the use of monopolar resectoscopes when used with non-electrolytic distending media, **air/gas emboli have been reported with the use of bipolar resectoscopes and laser when used in saline for uterine surgery.** Proper monitoring of end-tidal CO_2, oxygen saturation and possibly Doppler TE echo should be monitored during the procedures by the operating team. Removal of the weighed speculum and use of a modified Trendelenberg and monitoring of intrauterine pressure are also recommended to reduce intravasation of uterine contents into the vascular system.

Diagnostic Hysteroscopy

Indications for Use:

- abnormal uterine bleeding
- infertility and pregnancy wastage
- evaluation of abnormal hysterosalpingogram
- intrauterine foreign body
- pelvic pain
- evaluation of abnormalities of the endometrium
- monitoring IUD status

Questions? Contact FDA/CDRH/OCE/DID at CDRH-FOISTATUS@fda.hhs.gov or 301-796-8118

Records processed under FOIA Request 2011-7654; Released 1/22/13

Appendix I (Continued)

Absolute Contraindications for use:

- acute Pelvic Inflammatory Disease (PID)

Relative Contraindications for use:

- inability to distend uterus
- cervical/vaginal infection
- uterine bleeding or menses
- known pregnancy
- invasive carcinoma of the cervix
- recent uterine perforation
- medical contraindication
- intolerance to anesthesia

Warnings

Suspicion of pregnancy should suggest a pregnancy test prior to the performance of diagnostic hysteroscopy.

Precautions

Vaginal ultrasonography prior to hysteroscopy may identify clinical conditions that will alter patient management.

Operative Hysteroscopy

Indications for Use:

- directed biopsy
- removal of submucous fibroids and large polyps
- submucous myomectomy
- transection of intrauterine adhesions
- transection of intrauterine septa
- endometrial ablation

Absolute Contraindications for use:

- acute Pelvic Inflammatory Disease (PID)

Relative Contraindications for use:

- inability to distend uterus
- cervical/vaginal infection
- uterine bleeding or menses
- known pregnancy
- invasive carcinoma of the cervix
- recent uterine perforation
- medical contraindication
- intolerance to anesthesia

Appendix I (Continued)

Relative Contraindications to Endometrial Ablation

Hysteroscopic endometrial ablation, whether by laser or electrosurgery, should not be undertaken before adequate training, preceptorship and clinical experience. Additionally, tissue sampling is required prior to destruction of the endometrium. The following are clinical conditions that can significantly complicate hysteroscopic endometrial ablation:

- adenomatous endometrial hyperplasia
- severe adenomyosis
- pelvic pain (subtle PID)
- uterine anomalies

Relative Contraindications to Hysteroscopic Myomectomy

Hysteroscopic myomectomy, whether by laser or electrosurgery, should not be undertaken before adequate training, preceptorship and clinical experience. The following are clinical conditions that can significantly complicate hysteroscopic myomectomy:

- severe anemia
- inability to circumnavigate the myoma

Warnings

If a liquid distention medium is used (continuous flow hysteroscopy), strict fluid intake and output surveillance should be maintained. Intrauterine instillation exceeding 2 liters should be followed with great care to avoid the possibility of fluid overload.

Complications

- hyponatremia
- hypothermia
- uterine perforation, resulting in possible injury to the bowel, bladder, major blood vessels and ureter
- pulmonary edema
- cerebral edema
- air or gas embolization

Questions? Contact FDA/CDRH/OCE/DID at CDRH-FOISTATUS@fda.hhs.gov or 301-796-8118

Records processed under FOIA Request 2011-7654; Released 1/22/13

Appendix I (Continued)

Neurology

Indications for use:

Karl Storz Neuroendoscopes are indicated for use during neuroendoscopic surgical procedures for viewing the ventricles of the brain and performing diagnostic and therapeutic procedures.

Contraindications:

- Use of Karl Storz Neuroendoscopes are contraindicated whenever neuroendoscopy is contraindicated.
- Use of Karl Storz Neuroendoscopes are contraindicated in patients suspected of being infected with Creutzfeldt-Jakob disease.

Warnings:

- Infusion of fluids into the cranial cavity without proper venting can lead to intracranial hypertension. Introduction and evacuation of fluids should be regulated by using the inflow and outflow stopcocks.
- During infusion of fluids when irrigating, make sure that the outflow path does not become obstructed. Increased intracranial pressure may result.
- Use of a camera is recommended with the neuroendoscope to ensure optimal viewing and to maintain sterility of the system. If direct viewing is desired, make sure your eye does not contact the eyepiece of the neuroendoscope. Sterility will be compromised.
- Insufficient cleaning may compromise the sterility of the neuroendoscope.
- The neuroendoscope must be sterilized after each use.
- Disinfection does not sterilize neuroendoscopes.
- The use of the neuroendoscope with cables and accessories may produce tension and torquing forces on the neuroendoscope during use. To prevent pressure on, or injury to, the brain tissue, always be sure that the body of the neuroendoscope is supported adequately.

Appendix I (Continued)

- Do not allow the tip of the neuroendoscope to remain in contact with brain tissue for prolonged periods of time.

Cautions:

- Do not use the neuroendoscopes without the operating sheath.
- Immobilize the neuroendoscope using your hospital's standard stabilization system to ensure proper stabilization of the neuroendoscope during use.
- Irrigation fluids should be warmed to body temperature prior to infusion.
- When handling the neuroendoscope, always hold it by the eyepiece assembly.
- Avoid actions that might flex or bend the neuroendoscope shaft.
- Do not drop the neuroendoscope, or allow it to strike any hard surface.
- Do not place any object on top of the neuroendoscope.
- Do not touch the lenses at either end of the neuroendoscope.
- Do not introduce or withdraw surgical instruments through the neuroendoscope instrument channel while the instrument jaws are open; damage to the neuroendoscope and instruments may occur.

Precautions:

All procedures using Karl Storz Neuroendoscopes should be performed by a qualified neurosurgeon with neuroendoscopic experience.

Dentistry

Indications for Use: The Karl Storz HOPKINS® and HOPKINS® II Telescopes are to be used whenever magnification is desirable and/or access is restricted during dental, endodontic, and periodontic procedures.

Contraindications for use: The Karl Storz HOPKINS® and HOPKINS® II Telescopes are contraindicated for use when, in the opinion of a qualified dentist, endodontist, or periodontist, such use would create a condition that would be dangerous for the patient.

Questions? Contact FDA/CDRH/OCE/DID at CDRH-FOISTATUS@fda.hhs.gov or 301-796-8118

Records processed under FOIA Request 2011-7654; Released 1/22/13

STORZ
KARL STORZ ENDOSCOPY

Appendix II

Cleaning Accessories available from KSEA

Cleaning Brushes:

27648 A	Cleaning brush. Length: 50 cm
27650 A	Same. Length: 35 cm. Large size
27662	Grasping forceps for careful handling of instruments

Metal Sterilizing Cases:

27640 A	Metal case with cover for telescopes with holes for sterilization, 400 x 75 x 50 mm
27640 B	Same, 260 x 75 x 50 mm
27640 C	Same, 615 x 75 x 50 mm
27641 A	Same, 640 x 140 x 50 mm
27641 C	Same, 500 x 200 x 50 mm
27641 E	Same, 400 x 150 x 50 mm

Protective tubes for Hopkins telescopes:

723750 A	Length, 11.9 cm
723750 B	Length, 19.7 cm
723750 E	Length, 31.9 cm
723750 H	Length, 46.8 cm

Cleaning pistol and attachments:

27660

STORZ
KARL STORZ ENDOSCOPY

Quick Reference for Sterilization of Karl Storz Telescopes:

Sterilization Method	Hopkins*	Hopkins*II	Hopkins* Autoclav	Hopkins*II Autoclav
Ethylene oxide (EtO) gas	Yes	Yes	Yes	Yes
Steam				
Pre-vacuum	No	No	Yes	Yes
Flash	No	No	No	No
STERRAD® System	Yes	Yes	Yes	Yes
STERIS	Yes	Yes	Yes	Yes
Disinfection *				
Glutaraldehyde	Yes	Yes	Yes	Yes
Ortho-Phthalaldehyde	Yes	Yes	Yes	Yes

***WARNING:** High level disinfection is NOT recommended for telescopes to be used for laparoscopy, arthroscopy, hysteroscopy, plastic, reconstructive, aesthetic, or neurology surgery procedures.
****WARNING:** Do not use STERIS for telescopes with instrument channels.
*****WARNING:** Refer to STERRAD instructions for lumen size restrictions.

Questions? Contact FDA/CDRH/OCE/DID at CDRH-FOISTATUS@fda.hhs.gov or 301-796-8118

Records processed under FOIA Request 2011-7654; Released 1/22/13

STORZ
KARL STORZ ENDOSCOPY

DISTRIBUTED AND SERVICED BY:

Karl Storz Endoscopy-America, Inc.
600 Corporate Pointe
Culver City, California 90230-7600
310 338 8100
Toll Free 800 421 0837
Telefax 310 410 5530

©2003 Karl Storz Endoscopy-America, Inc

Questions? Contact FDA/CDRH/OCE/DID at CDRH-FOISTATUS@fda.hhs.gov or 301-796-8118

Records processed under FOIA Request 2011-7654, Released 1/22/13

EPC - Windows Internet Explorer

http://epc.karlstorz.com/epc/Starter.jsp?locale=EN&practiceArea=ENT&product=&sid=SID-733C85ED-AB102C06

STORZ KARL STORZ — ENDOSKOPE

ENDOSCOPES AND INSTRUMENTS FOR ENT – ESOPHAGOSCOPY – BRONCHOSCOPY

Company

Change practice area:

Table Of Contents

4. SINOSCOPY, RHINOSCOPY, POSTRHINOSCOPY, FESS, NASAL SINUSES, SKULL BASE

229

Video Rhino-Laryngoscope – for use with IMAGE 1™, TELECAM® SL II, TELECAM® DX II and TELE PACK™ 230–231

TELE PACK™ – The Mobile Compact Solution – Documentation Terminal for Video Rhino-Laryngoscope 232

Rhino-Fiberscopes 233

Rhino-Fiberscopes – Overview 234–235

HOPKINS® II Telescopes – for Autofluorescence/Photodynamic Diagnosis (PDD) of Nose and Nasal Sinuses, diameter 4 mm, length 18 cm 236

HOPKINS® II Telescopes – for Diagnosis, Surgery and...

Search

7230CWA

Find

Tree | Table

Product (Hits: 1)

HOPKINS® II Wide Angle Lateral Telescope 70°

7230 CWA

Settings

Catalog: Page View

104%

236

HOPKINS® II Telescopes

for Autofluorescence/Photodynamic Diagnosis (PDD) of Nose and Nasal Sinuses, diameter 4 mm, length 18 cm

STORZ KARL STORZ — ENDOSKOPE

For Diagnosis and Early Detection of Carcinomas

7230 AP

0°

7230 AP — HOPKINS® Straight Forward Telescope 0°, enlarged view, for autofluorescence/photodynamic diagnosis (PDD), diameter 4 mm, length 18 cm, autoclavable, fiber optic light transmission and filter exchanger incorporated, color code: green

30°

7230 BP — HOPKINS® Forward-Oblique Telescope 30°, enlarged view, for autofluorescence/photodynamic diagnosis (PDD), diameter 4 mm, length 18 cm, autoclavable, fiber optic light transmission and filter exchanger incorporated, color code: red

45°

7230 FP — HOPKINS® Forward-Oblique Telescope 45°, enlarged view, for autofluorescence/photodynamic diagnosis (PDD), diameter 4 mm, length 18 cm, autoclavable, fiber optic light transmission and filter exchanger incorporated, color code: black

Fluid Light Cable

HOPKINS® II Telescopes

for Diagnosis, Surgery and Treatment of Nose and Nasal Sinuses

STORZ KARL STORZ — ENDOSKOPE

Diameter 4 mm, length 18 cm

7230 AWA

0°

7230 AWA — HOPKINS® Wide Angle Straight Forward Telescope 0°, enlarged view, diameter 4 mm, length 18 cm, autoclavable, fiber optic light transmission incorporated, color code: green

30°

7230 BWA — HOPKINS® Wide Angle Forward-Oblique Telescope 30°, enlarged view, diameter 4 mm, length 18 cm, autoclavable, fiber optic light transmission incorporated, color code: red

45°

7230 FWA — HOPKINS® Wide Angle Forward-Oblique Telescope 45°, enlarged view, diameter 4 mm, length 18 cm, autoclavable, fiber optic light transmission incorporated, color code: black

70°

7230 CWA — HOPKINS® Wide Angle Lateral Telescope 70°, enlarged view, diameter 4 mm, length 18 cm, autoclavable, fiber optic light transmission incorporated, color code: yellow

8th EDITION 1/2010

Internet

100%

Questions? Contact FDA/CDRH/OCE/DID at CDRH-FOISTATUS@fda.hhs.gov or 301-796-8808

Records processed under FOIA Request 2011-7654; Released 1/22/13

medical technology
RPUS30EB09 | May 2009

us markets for ent & bronchoscopy 2009

Name: Daniel Harte
Company: Acclarent Inc.
Report Code: MR001256
License Type: Single License

millennium
RESEARCH GROUP
A Decision Resources, Inc. Company
175 Bloor St. E, Suite 701, South Tower | Toronto, ON | M4W 3R8 | Canada | T. (416) 364-7776 | F. (416) 364-8246 | www.mrg.net

Exhibit 98: Leading Competitors in the ENT Rod Lens Rigidscope Market, by Segment, as a % of Total, US, 2008

Company	Rhinoscope Market	Laryngoscope Market	Otological Endoscope Market	Total Market
KARL STORZ	52.2%	47.8%	40.9%	51.3%
Olympus / Gyrus-ACMI	21.7%	27.5%	46.0%	23.1%
Medtronic	17.5%	*	*	14.9%
Other	8.6%	24.7%	13.1%	10.7%
Total	100.0%	100.0%	100.0%	100.0%

(1) *Indicates company is included in Other.

(2) Other includes ATMOS (rhinoscopes, otoscopes), Aztec Medical Products (rhinoscopes, laryngoscopes), BR Surgical (rhinoscopes, otoscopes), Grace Medical (rhinoscopes, otoscopes), Invotec International (rhinoscopes), MedTek (rhinoscopes), PENTAX Medical (laryngoscopes), Richard Wolf (rhinoscopes, laryngoscopes), and Teleflex Medical (all segments).

(3) Revenues for refurbished devices are included in Other.

Source: Millennium Research Group.

Questions? Contact FDA/CDRH/OCE/DID at CDRH-FOISTATUS@fda.hhs.gov or 301-796-8118

(b)(4) Material Info

(b)(4) Material Info

(b)(4) Material Info

(b)(4) Material Info

(b)(4) Material Info

(b)(4) Material Info

(b)(4) Material Info

(b)(4) Material Info

(b)(4) Material Info

(b)(4) Material Info

(b)(4) Material Info