Records processed under FOIA Request 2011-7650; Released 1/25/12

U.S. Department of Health & Human Services

Food and Drug Administration

FOIA RESPONSE

USER: (ixg)

FOLDER: K100577 - 1276 pages (FOI:11007650)

COMPANY: ACCLARENT, INC. (ACCLARENT)

PRODUCT: NASOPHARYNGOSCOPE (FLEXIBLE OR RIGID) (EOB)

SUMMARY: Product: ACCLARENT CYCLOPS MULTI-ANGLE ENDOSCOPE

DATE REQUESTED: Dec 20, 2011

DATE PRINTED: Dec 20, 2011

Note: Releasable Version

Questions? Contact FDA/CDRH/OCE/DID at CDRH-FOISTATUS@fda.hhs.gov or 301-796-8118

Records processed under FOIA Request 2011-7650; Released 1/25/12 JAN 6 2011

Acclarent

K100577

510(k) SUMMARY

Sponsor/Submitter: Acclarent, Inc.
1525-B O'Brien Drive
Menlo Park, California 94025

Contact Person: Keri Yen
Regulatory Affairs Manager
Phone: (650) 687-5874
Fax: (650) 687-4449

Date of Preparation: January 5, 2011

Device Trade Name/ Model Number: Acclarent Cyclops Multi-Angle Endoscope
CYE001

Common Name: Endoscope

Device Classification: Class II

Regulation Number: 21 CFR 874.4760

Classification Name: Nasopharyngoscope (Flexible or Rigid)

Product Code: EOB

Predicate Devices: OPTIM Inc. ENTity Nasoview Nasopharyngoscope (K080622)
Pollux Endoscopy Inc. Sinuscope (K002214)
Optus Sinuscope (K944656)
Karl Storz Hopkins Rigid Autoclavable Telescope (K935279)
Stryker Endoscopy Arthroscope (K093677)

Device Description: The Acclarent Cyclops Multi-Angle Endoscope is a 4mm rigid endoscope that has the capability of varying direction of view from 10° to 100°, which is altered by the direction of view dial. The direction of view is indicated by visible markings on the scope body. Cyclops provides a 60° field of view and a depth of focus from 5 mm to 40mm. The device shaft can also rotate 320° to allow for visualization of structures without rotating the device; this is controlled by the shaft rotation dial. Small rare-earth permanent magnets are incorporated into the proximal scope control body (≤10 gauss at 2cm) and drive the change in the direction of view. A standard eyepiece located on the proximal end of the device is compatible with a standard camera coupler. The light post on the subject device is compatible with an ACMI light source.

There are two stainless steel adapters that accompany the Acclarent Cyclops Multi-Angle Endoscope to facilitate connection with Wolf or Storz/Olympus medical light sources. The adapters connect to the

Questions? Contact FDA/CDRH/OCE/DID at CDRH-FOISTATUS@fda.hhs.gov or 301-796-8118

Records processed under FOIA Request 2011-7650; Released 1/25/12

light post. The Acclarent Cyclops Multi-Angle Endoscope is a reusable device and must be cleaned and sterilized according to the user manual prior to every use.

Indications for Use: The Acclarent Cyclops Multi-Angle Endoscope is intended to provide an endoscopic means to view the nasal cavity and nasopharynx in an operating room environment.

Technological Characteristics:

Attribute	Predicate Device (OPTIM Inc ENTity Nasoview Nasopharyngoscope)	Predicate Device (Pollux Endoscopy, Inc Sinuscope)	Predicate Device (Optus Sinuscope)	Subject Device (Acclarent Cyclops Multi-Angle Endoscope)
510(k) number	K080622	K002214	K944656	K100577
Rigidity	Flexible and Steerable	Rigid	Rigid	Same, Rigid
Viewing Optics	Lens	Lens	Lens	Same, Lens
Depth of View	5-50mm	5mm-45mm	Unknown	Same, 5-45 mm
Field of View	70°	95°	71° to 83°	60°
Direction of View	0° to 135°	0°, 30°, 45°, 70°	0°, 30°, 70°	10° to 100°
Shaft Body Diameter	3.6mm	2.7mm or 4mm	2.7mm or 4mm	Same, 4mm
Working Length	11.8 inches (30cm)	9.06 inches (230mm)	6.89 inches	Same, 6.89 inches (175mm)
Illumination Fibers	Glass Fibers	Glass Fibers	Glass Fibers	Same, Glass Fibers
Light Source	Integrated LED	Medical light source	Medical light source	Same, Medical light source

Performance Data: Performance testing of the Acclarent Cyclops Multi-Angle Endoscope consisted of bench testing and a cadaver study. Bench testing met all acceptance criteria for attributes such as distal shaft diameter, working length, field of view, fixed focus, direction of view, rotation of view, illumination, scope resolution, dial actuation forces, temperature testing, field strength testing of magnets, electrical safety, EMC testing, durability testing, environmental conditioning, compression testing, random vibration testing, and shock (free fall drop) testing. Clinical data was not necessary for the subject device. The performance data demonstrates that the Acclarent Cyclops Multi-Angle Endoscope performs as intended.

Questions? Contact FDA/CDRH/OCE/DID at CDRH-FOISTATUS@fda.hhs.gov or 301-796-8118

Records processed under FOIA Request 2011-7650; Released 1/25/12

Validated Reprocessing Methods:

- Full manual cleaning with extended enzymatic soak plus general instrument automated washer
- Pre-vacuum steam sterilization (wrapped)

Summary of Substantial Equivalence:

The Acclarent Cyclops Multi-Angle Endoscope is substantially equivalent to the predicate devices as confirmed through relevant performance tests and attributes.

Questions? Contact FDA/CDRH/OCE/DID at CDRH-FOISTATUS@fda.hhs.gov or 301-796-8118

Records processed under FOIA Request 2011-7650; Released 1/25/12

DEPARTMENT OF HEALTH & HUMAN SERVICES

Public Health Service

Food and Drug Administration
10903 New Hampshire Avenue
Document Control Room W-O66-0609
Silver Spring, MD 20993-0002

JAN 6 2011

Acclarent, Inc.
c/o Ms. Keri Yen
Regulatory Affairs Manager
1525-B O'Brien Dr.
Menlo Park, CA 94025

Re: K100577
Trade/Device Name: Acclarent Cyclops Multiangle Endoscope
Regulation Number: 21 CFR 874.4680
Regulation Name: Nasopharyngoscope, Flexible or Rigid
Regulatory Class: II
Product Code: EOB
Dated: 12/23/2010
Received: 12/27/2010

Dear Ms. Yen:

We have reviewed your Section 510(k) premarket notification of intent to market the device referenced above and have determined the device is substantially equivalent (for the indications for use stated in the enclosure) to legally marketed predicate devices marketed in interstate commerce prior to May 28, 1976, the enactment date of the Medical Device Amendments, or to devices that have been reclassified in accordance with the provisions of the Federal Food, Drug, and Cosmetic Act (Act) that do not require approval of a premarket approval application (PMA). You may, therefore, market the device, subject to the general controls provisions of the Act. The general controls provisions of the Act include requirements for annual registration, listing of devices, good manufacturing practice, labeling, and prohibitions against misbranding and adulteration. Please note: CDRH does not evaluate information related to contract liability warranties. We remind you, however, that device labeling must be truthful and not misleading.

If your device is classified (see above) into either class II (Special Controls) or class III (PMA), it may be subject to additional controls. Existing major regulations affecting your device can be found in the Code of Federal Regulations, Title 21, Parts 800 to 898. In addition, FDA may publish further announcements concerning your device in the Federal Register.

Records processed under FOIA Request 2011-7650; Released 1/25/12

Please be advised that FDA's issuance of a substantial equivalence determination does not mean that FDA has made a determination that your device complies with other requirements of the Act or any Federal statutes and regulations administered by other Federal agencies. You must comply with all the Act's requirements, including, but not limited to: registration and listing (21 CFR Part 807); labeling (21 CFR Part 801); medical device reporting (reporting of medical device-related adverse events) (21 CFR 803); good manufacturing practice requirements as set forth in the quality systems (QS) regulation (21 CFR Part 820); and if applicable, the electronic product radiation control provisions (Sections 531-542 of the Act); 21 CFR 1000-1050.

If you desire specific advice for your device on our labeling regulation (21 CFR Part 801), please go to http://www.fda.gov/AboutFDA/CentersOffices/CDRH/CDRHOffices/ucm115809.htm for the Center for Devices and Radiological Health's (CDRH's) Office of Compliance. Also, please note the regulation entitled, "Misbranding by reference to premarket notification" (21CFR Part 807.97). For questions regarding the reporting of adverse events under the MDR regulation (21 CFR Part 803), please go to http://www.fda.gov/MedicalDevices/Safety/ReportaProblem/default.htm for the CDRH's Office of Surveillance and Biometrics/Division of Postmarket Surveillance.

You may obtain other general information on your responsibilities under the Act from the Division of Small Manufacturers, International and Consumer Assistance at its toll-free number (800) 638-2041 or (301) 796-7100 or at its Internet address http://www.fda.gov/MedicalDevices/ResourcesforYou/Industry/default.htm.

Sincerely yours,

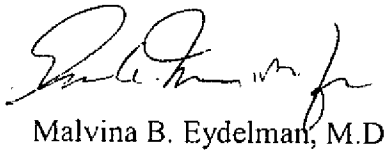

Malvina B. Eydelman, M.D.
Director
Division of Ophthalmic, Neurological,
and Ear, Nose and Throat Devices
Office of Device Evaluation
Center for Devices and
Radiological Health

Enclosure

Questions? Contact FDA/CDRH/OCE/DID at CDRH-FOISTATUS@fda.hhs.gov or 301-796-8118

Records processed under FOIA Request 2011-7650; Released 1/25/12

Acclarent

INDICATIONS FOR USE STATEMENT

510(k) Number (if known): K100577

Trade Name: Acclarent Cyclops Multi-Angle Endoscope

Common Name: Endoscope

Indications For Use: The Acclarent Cyclops Multi-Angle Endoscope is intended to provide an endoscopic means to view the nasal cavity and nasopharynx in an operating room environment.

Prescription Use X (Part 21 CFR 801 Subpart D) AND/OR Over-The-Counter Use _____ (21 CFR 801 Subpart C)

(PLEASE DO NOT WRITE BELOW THIS LINE-CONTINUE ON ANOTHER PAGE OF NEEDED)

Concurrence of CDRH, Office of Device Evaluation (ODE)

(Division Sign-Off)
Division of Ophthalmic, Neurological and Ear, Nose and Throat Devices

510(k) Number K100577

Prescription Use X
(Per 21 CFR 801.109)

Questions? Contact FDA/CDRH/OCE/DID at CDRH-FOISTATUS@fda.hhs.gov or 301-796-8118

Records processed under FOIA Request 2011-7650; Released 1/25/12

DEPARTMENT OF HEALTH & HUMAN SERVICES

Public Health Service

Food and Drug Administration
10903 New Hampshire Avenue
Document Control Room W-O66-0609
Silver Spring, MD 20993-0002

JAN 6 2011

Acclarent, Inc.
c/o Ms. Keri Yen
Regulatory Affairs Manager
1525-B O'Brien Dr.
Menlo Park, CA 94025

Re: K100577
Trade/Device Name: Acclarent Cyclops Multiangle Endoscope
Regulation Number: 21 CFR 874.4680
Regulation Name: Nasopharyngoscope, Flexible or Rigid
Regulatory Class: II
Product Code: EOB
Dated: 12/23/2010
Received: 12/27/2010

Dear Ms. Yen:

We have reviewed your Section 510(k) premarket notification of intent to market the device referenced above and have determined the device is substantially equivalent (for the indications for use stated in the enclosure) to legally marketed predicate devices marketed in interstate commerce prior to May 28, 1976, the enactment date of the Medical Device Amendments, or to devices that have been reclassified in accordance with the provisions of the Federal Food, Drug, and Cosmetic Act (Act) that do not require approval of a premarket approval application (PMA). You may, therefore, market the device, subject to the general controls provisions of the Act. The general controls provisions of the Act include requirements for annual registration, listing of devices, good manufacturing practice, labeling, and prohibitions against misbranding and adulteration. Please note: CDRH does not evaluate information related to contract liability warranties. We remind you, however, that device labeling must be truthful and not misleading.

If your device is classified (see above) into either class II (Special Controls) or class III (PMA), it may be subject to additional controls. Existing major regulations affecting your device can be found in the Code of Federal Regulations, Title 21, Parts 800 to 898. In addition, FDA may publish further announcements concerning your device in the Federal Register.

Records processed under FOIA Request 2011-7650; Released 1/25/12

Please be advised that FDA's issuance of a substantial equivalence determination does not mean that FDA has made a determination that your device complies with other requirements of the Act or any Federal statutes and regulations administered by other Federal agencies. You must comply with all the Act's requirements, including, but not limited to: registration and listing (21 CFR Part 807); labeling (21 CFR Part 801); medical device reporting (reporting of medical device-related adverse events) (21 CFR 803); good manufacturing practice requirements as set forth in the quality systems (QS) regulation (21 CFR Part 820); and if applicable, the electronic product radiation control provisions (Sections 531-542 of the Act); 21 CFR 1000-1050.

If you desire specific advice for your device on our labeling regulation (21 CFR Part 801), please go to http://www.fda.gov/AboutFDA/CentersOffices/CDRH/CDRHOffices/ucm115809.htm for the Center for Devices and Radiological Health's (CDRH's) Office of Compliance. Also, please note the regulation entitled, "Misbranding by reference to premarket notification" (21CFR Part 807.97). For questions regarding the reporting of adverse events under the MDR regulation (21 CFR Part 803), please go to http://www.fda.gov/MedicalDevices/Safety/ReportaProblem/default.htm for the CDRH's Office of Surveillance and Biometrics/Division of Postmarket Surveillance.

You may obtain other general information on your responsibilities under the Act from the Division of Small Manufacturers, International and Consumer Assistance at its toll-free number (800) 638-2041 or (301) 796-7100 or at its Internet address http://www.fda.gov/MedicalDevices/ResourcesforYou/Industry/default.htm.

Sincerely yours,

Malvina B. Eydelman, M.D.
Director
Division of Ophthalmic, Neurological,
and Ear, Nose and Throat Devices
Office of Device Evaluation
Center for Devices and
Radiological Health

Enclosure

Questions? Contact FDA/CDRH/OCE/DID at CDRH-FOISTATUS@fda.hhs.gov or 301-796-8118

Records processed under FOIA Request 2011-7650; Released 1/25/12

Acclarent

INDICATIONS FOR USE STATEMENT

510(k) Number (if known): K100577

Trade Name: Acclarent Cyclops Multi-Angle Endoscope

Common Name: Endoscope

Indications For Use: The Acclarent Cyclops Multi-Angle Endoscope is intended to provide an endoscopic means to view the nasal cavity and nasopharynx in an operating room environment.

Prescription Use X (Part 21 CFR 801 Subpart D) AND/OR Over-The-Counter Use _____ (21 CFR 801 Subpart C)

(PLEASE DO NOT WRITE BELOW THIS LINE-CONTINUE ON ANOTHER PAGE OF NEEDED)

Concurrence of CDRH, Office of Device Evaluation (ODE)

(Division Sign-Off)
Division of Ophthalmic, Neurological and Ear, Nose and Throat Devices

510(k) Number K100577

Prescription Use X
(Per 21 CFR 801.109)

3

Records processed under FOIA Request 2011-7650; Released 1/25/12

DEPARTMENT OF HEALTH & HUMAN SERVICES

Public Health Service

U.S. Food and Drug Administration
Center for Devices and Radiological Health
Document Mail Center ¿ WO66-G609
10903 New Hampshire Avenue
Silver Spring, MD 20993-0002

December 15, 2010

510k Number: K100577
Product: ACCLARENT CYCLOPS MULTI-ANGLE

ACCLARENT, INC.
1525-B O'BRIEN DR.
MENLO PARK, CALIFORNIA 94025
UNITED STATES
ATTN: KERI YEN

We are holding your above-referenced Premarket Notification (510(k)) for 30 days pending receipt of the additional information that was requested by the Office of Device Evaluation. Please remember that all correspondence concerning your submission MUST cite your 510(k) number and be sent in duplicate to the Document Mail Center at the above letterhead address. Correspondence sent to any address other than the one above will not be considered as part of your official premarket notification submission. Also, please note the new Blue Book Memorandum regarding Fax and E-mail Policy entitled, "Fax and E-Mail Communication with Industry about Premarket Files Under Review. Please refer to this guidance for information on current fax and e-mail practices at http://www.fda.gov/MedicalDevices/DeviceRegulationandGuidance/GuidanceDocuments/ucm089402.htm.

The deficiencies identified represent the issues that we believe need to be resolved before our review of your 510(k) submission can be successfully completed. In developing the deficiencies, we carefully considered the statutory criteria as defined in Section 513(i) of the Federal Food, Drug, and Cosmetic Act for determining substantial equivalence of your device. We also considered the burden that may be incurred in your attempt to respond to the deficiencies. We believe that we have considered the least burdensome approach to resolving these issues. If, however, you believe that information is being requested that is not relevant to the regulatory decision or that there is a less burdensome way to resolve the issues, you should follow the procedures outlined in the "A Suggested Approach to Resolving Least Burdensome Issues" document. It is available on our Center web page at: http://www.fda.gov/MedicalDevices/DeviceRegulationandGuidance/Overview/MedicalDeviceProvisionsofFDAModernizationAct/ucm136685.htm.

If after 30 days the additional information (AI), or a request for an extension of time, is not received, we will discontinue review of your submission and proceed to delete your file from our review system (21 CFR 807.87(l)). Please note our guidance document entitled, "Guidance for Industry and FDA Staff, FDA and Industry Actions on Premarket Notification (510(k)) Submissions: Effect on FDA Review Clock and Performance Assessment". If the submitter does submit a written request for an extension, FDA will permit the 510(k) to remain on hold for up to a maximum of 180 days from the date of the AI request. The purpose of this document is to assist agency staff and the device industry in understanding how various FDA and industry actions that may be taken on 510(k)s should affect the review clock for purposes of meeting the Medical Device User Fee and Modernization Act. You may review this document at http://www.fda.gov/MedicalDevices/DeviceRegulationandGuidance/GuidanceDocuments/ucm089735.htm. Pursuant to 21 CFR 20.29, a copy of your 510(k) submission will remain in the Office of Device Evaluation. If you then wish to resubmit this 510(k) notification, a new number will be assigned and your submission will be considered a new premarket notification submission.

375

Questions? Contact FDA/CDRH/OCE/DID at CDRH-FOISTATUS@fda.hhs.gov or 301-796-8118

Records processed under FOIA Request 2011-7650; Released 1/25/12

Please remember that the Safe Medical Devices Act of 1990 states that you may not place this device into commercial distribution until you receive a decision letter from FDA allowing you to do so.

If you have procedural questions, please contact the Division of Small Manufacturers International and Consumer Assistance (DSMICA) at (301)796-7100 or at their toll-free number (800)638-2041, or contact the 510k staff at (301)796-5640.

Sincerely yours,

Marjorie Shulman
Consumer Safety Officer
Premarket Notification Section
Office of Device Evaluation
Center for Devices and Radiological Health

Questions? Contact FDA/CDRH/OCE/DID at CDRH-FOISTATUS@fda.hhs.gov or 301-796-8118

Records processed under FOIA Request 2011-7650; Released 1/25/12

DEPARTMENT OF HEALTH & HUMAN SERVICES

Public Health Service

U.S. Food and Drug Administration
Center for Devices and Radiological Health
Document Mail Center ¿ WO66-G609
10903 New Hampshire Avenue
Silver Spring, MD 20993-0002

December 03, 2010

ACCLARENT, INC.
1525-B O'BRIEN DR.
MENLO PARK, CALIFORNIA 94025
UNITED STATES
ATTN: KERI YEN

510k Number: K100577

Product: ACCLARENT CYCLOPS

The additional information you have submitted has been received.

We will notify you when the processing of this submission has been completed or if any additional information is required. Pleaseremember that all correspondence concerning your submission MUST be sent to the Document Mail Center at the above letterhead address. Correspondence sent to any address other than the one above will not be considered as part of your official premarket notification submission. Also, please note the new Blue Book Memorandum regarding Fax and E-mail Policy entitled, "Fax and E-Mail Communication with Industry about Premarket Files Under Review. Please refer to this guidance for information on current fax and e-mail practices at http://www.fda.gov/MedicalDevices/DeviceRegulationandGuidance/GuidanceDocuments/ucm089402.htm. On August 12, 2005 CDRH issued the Guidance for Industry and FDA Staff: Format for Traditional and Abbreviated 510(k)s. This guidance can be found at http://www.fda.gov/MedicalDevices/DeviceRegulationandGuidance/GuidanceDocuments/ucm084365.htm. Please refer to this guidance for assistance on how to format an original submission for a Traditional or Abbreviated 510(k).

The Safe Medical Devices Act of 1990, signed on November 28, states that you may not place this device into commercial distribution until you receive a letter from FDA allowing you to do so. As in the past, we intend to complete our review as quickly as possible. Generally we do so in 90 days. However, the complexity of a submission or a requirement for additional information may occasionally cause the review to extend beyond 90 days. Thus, if you have not received a written decision or been contacted within 90 days of our receipt date you may want to check with FDA to determine the status of your submission.

Please ensure that whether you submit a 510(k) Summary as per 21 CFR 807.92, or a 510(k) Statement as per 21 CFR 807.93, it meets the content and format regulatory requirements.

If you have procedural questions, please contact the Division of Small Manufacturers International and Consumer Assistance (DSMICA) at (301)796-7100 or at their toll-free number (800)638-2041, or contact the 510k staff at (301)796-5640.

Sincerely,

510(k) Staff

Questions? Contact FDA/CDRH/OCE/DID at CDRH-FOISTATUS@fda.hhs.gov or 301-796-8118

710

Records processed under FOIA Request 2011-7650; Released 1/25/12

DEPARTMENT OF HEALTH & HUMAN SERVICES

Public Health Service

U.S. Food and Drug Administration
Center for Devices and Radiological Health
Document Mail Center ¿ WO66-G609
10903 New Hampshire Avenue
Silver Spring, MD 20993-0002

August 24, 2010

ACCLARENT, INC.
1525-B O'BRIEN DR.
MENLO PARK, CALIFORNIA 94025
UNITED STATES
ATTN: KERI YEN

510k Number: K100577
Product: ACCLARENT CYCLOPS MULTI-ANGLE

Extended Until: 01/24/2011

Based on your recent request, an extension of time has been granted for you to submit the additional information we requested.

If the additional information (AI) is not received by the "Extended Until" date shown above, your premarket notification will be considered withdrawn (21 CFR 807.87(l)). If the submitter does submit a written request for an extension, FDA will permit the 510(k) to remain on hold for up to a maximum of 180 days from the date of the AI request.

If you have procedural questions, please contact the Division of Small Manufacturers International and Consumer Assistance (DSMICA) at (301)796-7100 or at their toll-free number (800)638-2041, or contact the 510k staff at (301)796-5640.

Sincerely yours,

Marjorie Shulman
Consumer Safety Officer
Premarket Notification Section
Office of Device Evaluation
Center for Devices and Radiological Health

711

Questions? Contact FDA/CDRH/OCE/DID at CDRH-FOISTATUS@fda.hhs.gov or 301-796-8118

Records processed under FOIA Request 2011-7650; Released 1/25/12

Acclarent

Acclarent, Inc.
1525-B O'Brien Drive
Menlo Park, CA 94025

Main 650.687.5888
Fax 650.687.5889
www.acclarent.com

August 23, 2010

Ms. Susan Rudy
Food and Drug Administration
Center for Devices and Radiological Health
Document Mail Center—WO66-G609
10903 New Hampshire Avenue
Silver Spring, MD 20993-0002

FDA CDRH
AUG 2
Rec

(b)(4)

Sincerely,

Keri Yen
Regulatory Affairs Manager

K-30

712

Records processed under FOIA Request 2011-7650; Released 1/25/12

DEPARTMENT OF HEALTH & HUMAN SERVICES

Public Health Service

U.S. Food and Drug Administration
Center for Devices and Radiological Health
Document Mail Center ¿ WO66-G609
10903 New Hampshire Avenue
Silver Spring, MD 20993-0002

July 28, 2010

510k Number: K100577
Product: ACCLARENT CYCLOPS MULTI-ANGLE

ACCLARENT, INC.
1525-B O'BRIEN DR.
MENLO PARK, CALIFORNIA 94025
UNITED STATES
ATTN: KERI YEN

We are holding your above-referenced Premarket Notification (510(k)) for 30 days pending receipt of the additional information that was requested by the Office of Device Evaluation. Please remember that all correspondence concerning your submission MUST cite your 510(k) number and be sent in duplicate to the Document Mail Center at the above letterhead address. Correspondence sent to any address other than the one above will not be considered as part of your official premarket notification submission. Also, please note the new Blue Book Memorandum regarding Fax and E-mail Policy entitled, "Fax and E-Mail Communication with Industry about Premarket Files Under Review. Please refer to this guidance for information on current fax and e-mail practices at http://www.fda.gov/MedicalDevices/DeviceRegulationandGuidance/GuidanceDocuments/ucm089402.htm.

The deficiencies identified represent the issues that we believe need to be resolved before our review of your 510(k) submission can be successfully completed. In developing the deficiencies, we carefully considered the statutory criteria as defined in Section 513(i) of the Federal Food, Drug, and Cosmetic Act for determining substantial equivalence of your device. We also considered the burden that may be incurred in your attempt to respond to the deficiencies. We believe that we have considered the least burdensome approach to resolving these issues. If, however, you believe that information is being requested that is not relevant to the regulatory decision or that there is a less burdensome way to resolve the issues, you should follow the procedures outlined in the "A Suggested Approach to Resolving Least Burdensome Issues" document. It is available on our Center web page at: http://www.fda.gov/MedicalDevices/DeviceRegulationandGuidance/Overview/MedicalDeviceProvisionsofFDAModernizationAct/ucm136685.htm.

If after 30 days the additional information (AI), or a request for an extension of time, is not received, we will discontinue review of your submission and proceed to delete your file from our review system (21 CFR 807.87(l)). Please note our guidance document entitled, "Guidance for Industry and FDA Staff, FDA and Industry Actions on Premarket Notification (510(k)) Submissions: Effect on FDA Review Clock and Performance Assessment". If the submitter does submit a written request for an extension, FDA will permit the 510(k) to remain on hold for up to a maximum of 180 days from the date of the AI request. The purpose of this document is to assist agency staff and the device industry in understanding how various FDA and industry actions that may be taken on 510(k)s should affect the review clock for purposes of meeting the Medical Device User Fee and Modernization Act. You may review this document at http://www.fda.gov/MedicalDevices/DeviceRegulationandGuidance/GuidanceDocuments/ucm089735.htm. Pursuant to 21 CFR 20.29, a copy of your 510(k) submission will remain in the Office of Device Evaluation. If you then wish to resubmit this 510(k) notification, a new number will be assigned and your submission will be considered a new premarket notification submission.

713

Records processed under FOIA Request 2011-7650; Released 1/25/12
Please remember that the Safe Medical Devices Act of 1990 states that you may not place this device into commercial distribution until you receive a decision letter from FDA allowing you to do so.

If you have procedural questions, please contact the Division of Small Manufacturers International and Consumer Assistance (DSMICA) at (301)796-7100 or at their toll-free number (800)638-2041, or contact the 510k staff at (301)796-5640.

Sincerely yours,

Marjorie Shulman
Consumer Safety Officer
Premarket Notification Section
Office of Device Evaluation
Center for Devices and Radiological Health

714

Questions? Contact FDA/CDRH/OCE/DID at CDRH-FOISTATUS@fda.hhs.gov or 301-796-8118

Records processed under FOIA Request 2011-7650; Released 1/25/12

DEPARTMENT OF HEALTH & HUMAN SERVICES **Public Health Service**

U.S. Food and Drug Administration
Center for Devices and Radiological Health
Document Mail Center ¿ WO66-G609
10903 New Hampshire Avenue
Silver Spring, MD 20993-0002

July 01, 2010

ACCLARENT, INC.
1525-B O'BRIEN DR.
MENLO PARK, CALIFORNIA 94025
UNITED STATES
ATTN: KERI YEN

510k Number: K100577

Product: ACCLARENT CYCLOPS

The additional information you have submitted has been received.

We will notify you when the processing of this submission has been completed or if any additional information is required. Pleaseremember that all correspondence concerning your submission MUST be sent to the Document Mail Center at the above letterhead address. Correspondence sent to any address other than the one above will not be considered as part of your official premarket notification submission. Also, please note the new Blue Book Memorandum regarding Fax and E-mail Policy entitled, "Fax and E-Mail Communication with Industry about Premarket Files Under Review. Please refer to this guidance for information on current fax and e-mail practices at http://www.fda.gov/MedicalDevices/DeviceRegulationandGuidance/GuidanceDocuments/ucm089402.htm. On August 12, 2005 CDRH issued the Guidance for Industry and FDA Staff: Format for Traditional and Abbreviated 510(k)s. This guidance can be found at http://www.fda.gov/MedicalDevices/DeviceRegulationandGuidance/GuidanceDocuments/ucm084365.htm. Please refer to this guidance for assistance on how to format an original submission for a Traditional or Abbreviated 510(k).

The Safe Medical Devices Act of 1990, signed on November 28, states that you may not place this device into commercial distribution until you receive a letter from FDA allowing you to do so. As in the past, we intend to complete our review as quickly as possible. Generally we do so in 90 days. However, the complexity of a submission or a requirement for additional information may occasionally cause the review to extend beyond 90 days. Thus, if you have not received a written decision or been contacted within 90 days of our receipt date you may want to check with FDA to determine the status of your submission.

Please ensure that whether you submit a 510(k) Summary as per 21 CFR 807.92, or a 510(k) Statement as per 21 CFR 807.93, it meets the content and format regulatory requirements.

If you have procedural questions, please contact the Division of Small Manufacturers International and Consumer Assistance (DSMICA) at (301)796-7100 or at their toll-free number (800)638-2041, or contact the 510k staff at (301)796-5640.

Sincerely,

510(k) Staff

821

Questions? Contact FDA/CDRH/OCE/DID at CDRH-FOISTATUS@fda.hhs.gov or 301-796-8118

Records processed under FOIA Request 2011-7650; Released 1/25/12

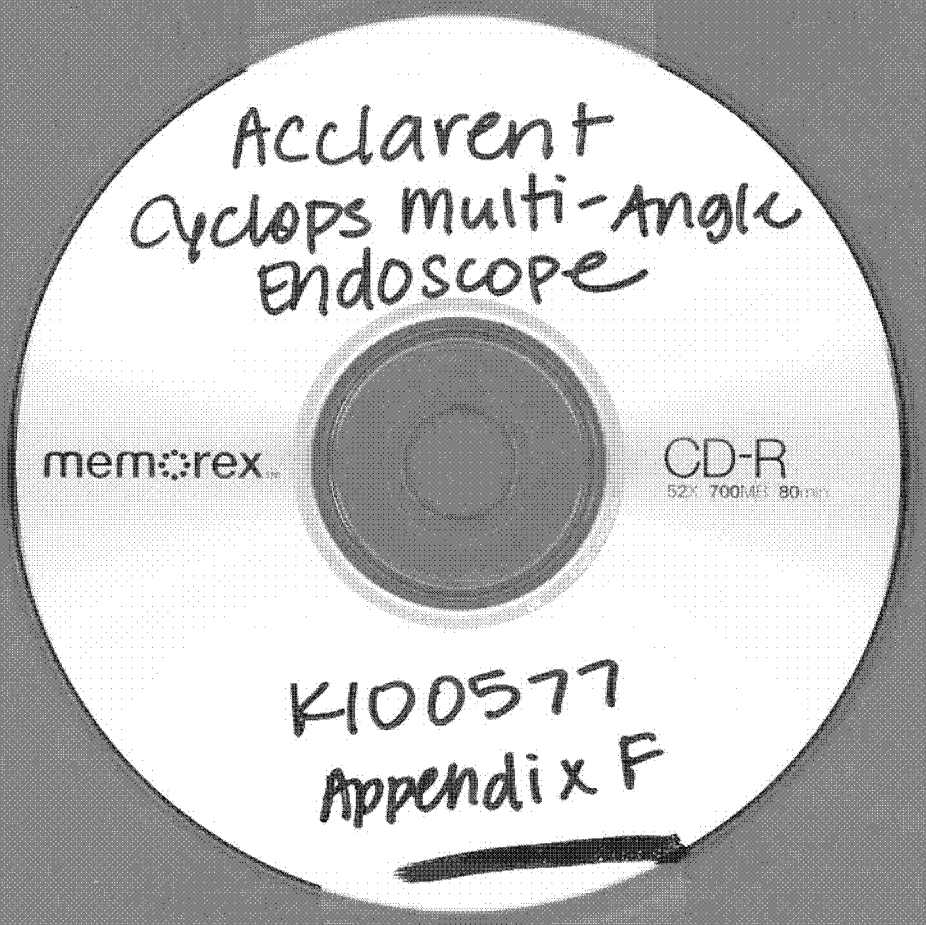

822

Questions? Contact FDA/CDRH/OCE/DID at CDRH-FOISTATUS@fda.hhs.gov or 301-796-8118

Records processed under FOIA Request 2011-7650; Released 1/25/12

DEPARTMENT OF HEALTH & HUMAN SERVICES **Public Health Service**

U.S. Food and Drug Administration
Center for Devices and Radiological Health
Document Mail Center – WO66-G609
10903 New Hampshire Avenue
Silver Spring, MD 20993-0002

May 11, 2010

ACCLARENT, INC.
1525-B O'BRIEN DR.
MENLO PARK, CALIFORNIA 94025
UNITED STATES
ATTN: KERI YEN

510k Number: K100577
Product: ACCLARENT CYCLOPS MULTI-ANGLE

Extended Until: 08/18/2010

Based on your recent request, an extension of time has been granted for you to submit the additional information we requested.

If the additional information (AI) is not received by the "Extended Until" date shown above, your premarket notification will be considered withdrawn (21 CFR 807.87(l)). If the submitter does submit a written request for an extension, FDA will permit the 510(k) to remain on hold for up to a maximum of 180 days from the date of the AI request.

If you have procedural questions, please contact the Division of Small Manufacturers International and Consumer Assistance (DSMICA) at (301)796-7100 or at their toll-free number (800)638-2041, or contact the 510k staff at (301)796-5640.

Sincerely yours,

Marjorie Shulman
Consumer Safety Officer
Premarket Notification Section
Office of Device Evaluation
Center for Devices and Radiological Health

823

Questions? Contact FDA/CDRH/OCE/DID at CDRH-FOISTATUS@fda.hhs.gov or 301-796-8118

Records processed under FOIA Request 2011-7650; Released 1/25/12

Acclarent

Acclarent, Inc.
1525-B O'Brien Drive
Menlo Park, CA 94025

Main 650.687.5888
Fax 650.687.5889
www.acclarent.com

May 10, 2010

Ms. Susan Rudy
Food and Drug Administration
Center for Devices and Radiological Health
Document Mail Center—WO66-G609
10903 New Hampshire Avenue
Silver Spring, MD 20993-0002

FDA CDRH DMC
MAY 11 2010
Received

(b)(4)

Sincerely,

Keri Yen
Regulatory Affairs Manager

K18

824

Records processed under FOIA Request 2011-7650; Released 1/25/12

DEPARTMENT OF HEALTH & HUMAN SERVICES

Public Health Service

U.S. Food and Drug Administration
Center for Devices and Radiological Health
Document Mail Center – WO66-G609
10903 New Hampshire Avenue
Silver Spring, MD 20993-0002

April 21, 2010

510k Number: K100577
Product: ACCLARENT CYCLOPS MULTI-ANGLE

ACCLARENT, INC.
1525-B O'BRIEN DR.
MENLO PARK, CALIFORNIA 94025
UNITED STATES
ATTN: KERI YEN

We are holding your above-referenced Premarket Notification (510(k)) for 30 days pending receipt of the additional information that was requested by the Office of Device Evaluation. Please remember that all correspondence concerning your submission MUST cite your 510(k) number and be sent in duplicate to the Document Mail Center at the above letterhead address. Correspondence sent to any address other than the one above will not be considered as part of your official premarket notification submission. Also, please note the new Blue Book Memorandum regarding Fax and E-mail Policy entitled, "Fax and E-Mail Communication with Industry about Premarket Files Under Review. Please refer to this guidance for information on current fax and e-mail practices at http://www.fda.gov/MedicalDevices/DeviceRegulationandGuidance/GuidanceDocuments/ucm089402.htm.

The deficiencies identified represent the issues that we believe need to be resolved before our review of your 510(k) submission can be successfully completed. In developing the deficiencies, we carefully considered the statutory criteria as defined in Section 513(i) of the Federal Food, Drug, and Cosmetic Act for determining substantial equivalence of your device. We also considered the burden that may be incurred in your attempt to respond to the deficiencies. We believe that we have considered the least burdensome approach to resolving these issues. If, however, you believe that information is being requested that is not relevant to the regulatory decision or that there is a less burdensome way to resolve the issues, you should follow the procedures outlined in the "A Suggested Approach to Resolving Least Burdensome Issues" document. It is available on our Center web page at: http://www.fda.gov/MedicalDevices/DeviceRegulationandGuidance/Overview/MedicalDeviceProvisionsofFDAModernizationAct/ucm136685.htm.

If after 30 days the additional information (AI), or a request for an extension of time, is not received, we will discontinue review of your submission and proceed to delete your file from our review system (21 CFR 807.87(l)). Please note our guidance document entitled, "Guidance for Industry and FDA Staff, FDA and Industry Actions on Premarket Notification (510(k)) Submissions: Effect on FDA Review Clock and Performance Assessment". If the submitter does submit a written request for an extension, FDA will permit the 510(k) to remain on hold for up to a maximum of 180 days from the date of the AI request. The purpose of this document is to assist agency staff and the device industry in understanding how various FDA and industry actions that may be taken on 510(k)s should affect the review clock for purposes of meeting the Medical Device User Fee and Modernization Act. You may review this document at http://www.fda.gov/MedicalDevices/DeviceRegulationandGuidance/GuidanceDocuments/ucm089735.htm. Pursuant to 21 CFR 20.29, a copy of your 510(k) submission will remain in the Office of Device Evaluation. If you then wish to resubmit this 510(k) notification, a new number will be assigned and your submission will be considered a new premarket notification submission.

825

Questions? Contact FDA/CDRH/OCE/DID at CDRH-FOISTATUS@fda.hhs.gov or 301-796-8118

Records processed under FOIA Request 2011-7650; Released 1/25/12

Please remember that the Safe Medical Devices Act of 1990 states that you may not place this device into commercial distribution until you receive a decision letter from FDA allowing you to do so.

If you have procedural questions, please contact the Division of Small Manufacturers International and Consumer Assistance (DSMICA) at (301)796-7100 or at their toll-free number (800)638-2041, or contact the 510k staff at (301)796-5640.

Sincerely yours,

Marjorie Shulman

Marjorie Shulman
Consumer Safety Officer
Premarket Notification Section
Office of Device Evaluation
Center for Devices and Radiological Health

826

Questions? Contact FDA/CDRH/OCE/DID at CDRH-FOISTATUS@fda.hhs.gov or 301-796-8118

Records processed under FOIA Request 2011-7650; Released 1/25/12

DEPARTMENT OF HEALTH & HUMAN SERVICES

Public Health Service

U.S. Food and Drug Administration
Center for Devices and Radiological Health
Document Mail Center – WO66-G609
10903 New Hampshire Avenue
Silver Spring, MD 20993-0002

March 02, 2010

ACCLARENT, INC.
1525-B O'BRIEN DR.
MENLO PARK, CALIFORNIA 94025
UNITED STATES
ATTN: KERI YEN

510k Number: K100577
Received: 3/1/2010
Product: ACCLARENT CYCLOPS MULTI-ANGLE

The Food and Drug Administration (FDA), Center for Devices and Radiological Health (CDRH), has received the Premarket Notification, (510(k)), you submitted in accordance with Section 510(k) of the Federal Food, Drug, and Cosmetic Act(Act) for the above referenced product and for the above referenced 510(k) submitter. Please note, if the 510(k) submitter is incorrect, please notify the 510(k) Staff immediately. We have assigned your submission a unique 510(k) number that is cited above. Please refer prominently to this 510(k) number in all future correspondence that relates to this submission. We will notify you when the processing of your 510(k) has been completed or if any additional information is required. YOU MAY NOT PLACE THIS DEVICE INTO COMMERCIAL DISTRIBUTION UNTIL YOU RECEIVE A LETTER FROM FDA ALLOWING YOU TO DO SO.

Please remember that all correspondence concerning your submission MUST be sent to the Document Mail Center (DMC) at the above letterhead address. Correspondence sent to any address other than the one above will not be considered as part of your official 510(k) submission.

On September 27, 2007, the President signed an act reauthorizing medical device user fees for fiscal years 2008 - 2012. The legislation - the Medical Device User Fee Amendments of 2007 is part of a larger bill, the Food and Drug Amendments Act of 2007. Please visit our website at http://www.fda.gov/MedicalDevices/DeviceRegulationandGuidance/Overview/MedicalDeviceUserFeeandModernizationActMDUFMA/default.htm for more information regarding fees and FDA review goals. In addition, effective January 2, 2008, any firm that chooses to use a standard in the review of ANY new 510(k) needs to fill out the new standards form (Form 3654) and submit it with their 510(k). The form may be found at http://www.fda.gov/AboutFDA/ReportsManualsForms/Forms/default.htm.

We remind you that Title VIII of the Food and Drug Administration Amendments Act of 2007 (FDAAA) amended the PHS Act by adding new section 402(j) (42 U.S.C. § 282(j)), which expanded the current database known as ClinicalTrials.gov to include mandatory registration and reporting of results for applicable clinical trials of human drugs (including biological products) and devices. Section 402(j) requires that a certification form http://www.fda.gov/AboutFDA/ReportsManualsForms/Forms/default.htm accompany 510(k)/HDE/PMA submissions. The agency has issued a draft guidance titled: "Certifications To Accompany Drug, Biological

940

Product, and Device Applications/Submissions: Compliance with Section 402(j) of The Public Health Service Act, Added By Title VIII of The Food and Drug Administration Amendments Act of 2007" http://www.fda.gov/MedicalDevices/DeviceRegulationandGuidance/HowtoMarketYourDevice/PremarketSubmissio 'is/PremarketNotification510k/ucm134034.htm. According to the draft guidance, 510(k) submissions that do not contain clinical data do not need the certification form.

Please note the following documents as they relate to 510(k) review: 1) Guidance for Industry and FDA Staff entitled, "Interactive Review for Medical Device Submissions: 510(k)s, Original PMAs, PMA Supplements, Original BLAs and BLA Supplements". This guidance can be found at http://www.fda.gov/MedicalDevices/DeviceRegulationandGuidance/GuidanceDocuments/ucm089402.htm. Please refer to this guidance for information on a formalized interactive review process. 2) Guidance for Industry and FDA Staff entitled, "Format for Traditional and Abbreviated 510(k)s". This guidance can be found at http://www.fda.gov/MedicalDevices/DeviceRegulationandGuidance/GuidanceDocuments/ucm084365.htm. Please refer to this guidance for assistance on how to format an original submission for a Traditional or Abbreviated 510(k).

In all future premarket submissions, we encourage you to provide an electronic copy of your submission. By doing so, you will save FDA resources and may help reviewers navigate through longer documents more easily. Under CDRH's e-Copy Program, you may replace one paper copy of any premarket submission (e.g., 510(k), IDE, PMA, HDE) with an electronic copy. For more information about the program, including the formatting requirements, please visit our web site at http://www.fda.gov/MedicalDevices/DeviceRegulationandGuidance/HowtoMarketYourDevice/PremarketSubmissions/ucm134508.html. In addition, the 510(k) Program Video is now available for viewing on line at http://www.fda.gov/MedicalDevices/DeviceRegulationandGuidance/HowtoMarketYourDevice/PremarketSubmissions/PremarketNotification510k/ucm070201.htm .

Please ensure that whether you submit a 510(k) Summary as per 21 CFR 807.92, or a 510(k) Statement as per 21 CFR 807.93, it meets the content and format regulatory requirements.

Lastly, you should be familiar with the regulatory requirements for medical devices available at Device Advice http://www.fda.gov/MedicalDevices/DeviceRegulationandGuidance/default.htm. If you have questions on the status of your submission, please contact DSMICA at (301)796-7100 or the toll-free number (800)638-2041 , or at their internet address http://www.fda.gov/MedicalDevices/DeviceRegulationandGuidance/default.htm. If you have procedural questions, please contact the 510(k) Staff at (301)796-5640.

Sincerely,

510(k) Staff

941

Records processed under FOIA Request 2011-7650; Released 1/25/12

K100577

Acclarent

Acclarent, Inc.

Main
Fax
www.acclarent.com

February 26, 2010

FDA CDRH DMC

MAR - 1 2010

Received

U.S. Food and Drug Administration
Center for Devices and Radiological Health
Document Mail Center (WO66-G609)
10903 New Hampshire Avenue
Silver Spring, MD 20993-0002

RE: Traditional 510(k): Acclarent Cyclops Multi-Angle Endoscope

Dear Sir/Madam,

Acclarent, Inc. hereby submits two copies of a Traditional 510(k) application for the Acclarent Cyclops Multi-Angle Endoscope (Cyclops).

Endoscopy is a minimally invasive procedure that allows for visualization of the body cavity interior. For otolaryngologists, an endoscope is commonly used to view the nasal cavity or nasopharynx while performing surgeries such as endoscopic sinus surgery. Endoscopes are generally available with a rigid or flexible shaft and can be connected to a camera head. Different angled endoscopes are available to the surgeons for visualization of different structures within the body cavity; common angles include 0°, 30°, and 70°.

The Acclarent Cyclops Multi-Angle Endoscope is intended to provide the physician with an endoscopic means to view a body cavity for nasal cavity or nasopharynx procedures. Cyclops is a rigid endoscope designed with a standard eyepiece that is compatible with a standard camera coupler. By rotating a dial, Cyclops allows the surgeon to view angles between 10° and 100° without requiring multiple endoscopes. Additionally, the subject device allows the surgeon to rotate the shaft 320° while visualizing the body cavity. Cyclops minimizes the need for multiple endoscopes when performing endoscopic surgery in the nose. A protection tube is also provided to protect the device during steam sterilization.

Acclarent has identified three Class II predicate devices for the subject device:

1. ENTity NasoView LED Nasopharyngoscope (K080622) manufactured by OPTIM Incorporated (Class II device, Product Code: EOB, Regulation Number 874.4760)
2. Sinuscope (K002214) manufactured by Pollux Endoscopy, Inc. (Class II device, Product Code: EOB, Regulation Number 874.4760)
3. Optus SinuScope (K944656) manufactured by Sopro-Comeg (Class II device, Product Code: EOB, Regulation Number 874.4760)

The indications for use, performance, and fundamental scientific technology of the Acclarent Cyclops Multi-Angle Endoscope are substantially equivalent to the predicate devices. Additionally, Cyclops does not raise any new issues of safety or effectiveness. Therefore, the subject device can be similarly classified as Class II, Product Code EOB, and regulation number 874.4760.

As required under the Medical Device User Fee and Modernization Act of 2002 (MDUFMA), Acclarent, Inc has submitted the user fees associated with this Premarket Notification. A copy of the

Questions? Contact FDA/CDRH/OCE/DID at CDRH-FOISTATUS@fda.hhs.gov or 301-796-8118

Records processed under FOIA Request 2011-7650; Released 1/25/12

Medical Device User Fee Coversheet (Payment Identification Number: MD6048120-956733) is included in this submission.

Acclarent, Inc. is also providing an electronic copy of this submission, which is an exact duplicate, per the guidance set forth by FDA.

Acclarent, Inc. regards the contents of this submission to be proprietary commercial information entitled to the full confidentiality safeguards of 21 CFR Parts 20.45, 20.61 and 807.95(b).
If you have any questions regarding this submission, please do not hesitate to contact me by phone- (650) 687-5874, fax (650) 687-4449 or by email at kyen@acclarent.com. Alternatively, you may also contact Mary Bellack at (650) 687-5858 or by email at mary.bellack@acclarent.com.

Sincerely,

Keri Yen
Regulatory Affairs Manager

Enclosures (2 copies)

Questions? Contact FDA/CDRH/OCE/DID at CDRH-FOISTATUS@fda.hhs.gov or 301-796-8118

Form Approved: OMB No. 0910-511 Expiration Date: January 31, 2010. See Instructions for OMB Statement.

DEPARTMENT OF HEALTH AND HUMAN SERVICES
FOOD AND DRUG ADMINISTRATION
MEDICAL DEVICE USER FEE COVER SHEET

PAYMENT IDENTIFICATION NUMBER: (b)(4)
Write the Payment Identification number on your check.

A completed cover sheet must accompany each original application or supplement subject to fees. If payment is sent by U.S. mail or courier, please include a copy of this completed form with payment. Payment and mailing instructions can be found at: http://www.fda.gov/oc/mdufma/coversheet.html

1. COMPANY NAME AND ADDRESS (include name, street address, city state, country, and post office code)

ACCLARENT INC
1525-B O'Brien Drive
Menlo Park CA 94025
US

1.1 EMPLOYER IDENTIFICATION NUMBER (EIN)
(b)(4)

2. CONTACT NAME
Keri Yen

2.1 E-MAIL ADDRESS
kyen@acclarent.com

2.2 TELEPHONE NUMBER (include Area code)
650-687-5874

2.3 FACSIMILE (FAX) NUMBER (Include Area code)

3. TYPE OF PREMARKET APPLICATION (Select one of the following in each column; if you are unsure, please refer to the application descriptions at the following web site: http://www.fda.gov/oc/mdufma

Select an application type:
[X] Premarket notification(510(k)); except for third party
[ ] 513(g) Request for Information
[ ] Biologics License Application (BLA)
[ ] Premarket Approval Application (PMA)
[ ] Modular PMA
[ ] Product Development Protocol (PDP)
[ ] Premarket Report (PMR)
[ ] Annual Fee for Periodic Reporting (APR)
[ ] 30-Day Notice

3.1 Select a center
[X] CDRH
[ ] CBER

3.2 Select one of the types below
[X] Original Application

Supplement Types:
[ ] Efficacy (BLA)
[ ] Panel Track (PMA, PMR, PDP)
[ ] Real-Time (PMA, PMR, PDP)
[ ] 180-day (PMA, PMR, PDP)

4. ARE YOU A SMALL BUSINESS? (See the instructions for more information on determining this status)
[ ] YES, I meet the small business criteria and have submitted the required qualifying documents to FDA
[X] NO, I am not a small business

4.1 If Yes, please enter your Small Business Decision Number:

5. FDA WILL NOT ACCEPT YOUR SUBMISSION IF YOUR COMPANY HAS NOT PAID AN ESTABLISHMENT REGISTRATION FEE THAT IS DUE TO FDA. HAS YOUR COMPANY PAID ALL ESTABLISHMENT REGISTRATION FEES THAT ARE DUE TO FDA?
[X] YES (All of our establishments have registered and paid the fee, or this is our first device, and we will register and pay the fee within 30 days of FDA's approval/clearance of this device.)
[ ] NO (If "NO," FDA will not accept your submission until you have paid all fees due to FDA. This submission will not be processed; see http://www.fda.gov/cdrh/mdufma for additional information)

6. IS THIS PREMARKET APPLICATION COVERED BY ANY OF THE FOLLOWING USER FEE EXCEPTIONS? IF SO, CHECK THE APPLICABLE EXCEPTION.
[ ] This application is the first PMA submitted by a qualified small business, including any affiliates
[ ] This biologics application is submitted under section 351 of the Public Health Service Act for a product licensed for further manufacturing use only
[ ] The sole purpose of the application is to support conditions of use for a pediatric population
[ ] The application is submitted by a state or federal government entity for a device that is not to be distributed commercially

7. IS THIS A SUPPLEMENT TO A PREMARKET APPLICATION FOR WHICH FEES WERE WAIVED DUE TO SOLE USE IN A PEDIATRIC POPULATION THAT NOW PROPOSES CONDITION OF USE FOR ANY ADULT POPULATION? (If so, the application is subject to the fee that applies for an original premarket approval application (PMA).

[ ] YES [X] NO

8. USER FEE PAYMENT AMOUNT SUBMITTED FOR THIS PREMARKET APPLICATION
(b)(4)
25-Feb-2010

Form FDA 3601 (01/2007)

"Close Window" Print Cover sheet

Questions? Contact FDA/CDRH/OCE/DID at CDRH-FOISTATUS@fda.hhs.gov or 301-796-8118

Records processed under FOIA Request 2011-7650; Released 1/25/12

DEPARTMENT OF HEALTH AND HUMAN SERVICES
FOOD AND DRUG ADMINISTRATION

CDRH PREMARKET REVIEW SUBMISSION COVER SHEET

Form Approval
OMB No. 9010-0120
Expiration Date: August 31, 2010.
See OMB Statement on page 5.

Date of Submission	User Fee Payment ID Number	FDA Submission Document Number *(if known)*
02/26/2010	MD6048120-956733	

SECTION A TYPE OF SUBMISSION

PMA	PMA & HDE Supplement	PDP	510(k)	Meeting
☐ Original Submission	☐ Regular (180 day)	☐ Original PDP	☑ Original Submission:	☐ Pre-510(K) Meeting
☐ Premarket Report	☐ Special	☐ Notice of Completion	☑ Traditional	☐ Pre-IDE Meeting
☐ Modular Submission	☐ Panel Track (PMA Only)	☐ Amendment to PDP	☐ Special	☐ Pre-PMA Meeting
☐ Amendment	☐ 30-day Supplement		☐ Abbreviated (Complete section I, Page 5)	☐ Pre-PDP Meeting
☐ Report	☐ 30-day Notice		☐ Additional Information	☐ Day 100 Meeting
☐ Report Amendment	☐ 135-day Supplement		☐ Third Party	☐ Agreement Meeting
☐ Licensing Agreement	☐ Real-time Review			☐ Determination Meeting
	☐ Amendment to PMA & HDE Supplement			☐ Other *(specify):*
	☐ Other			

IDE	Humanitarian Device Exemption (HDE)	Class II Exemption Petition	Evaluation of Automatic Class III Designation (De Novo)	Other Submission
☐ Original Submission	☐ Original Submission	☐ Original Submission	☐ Original Submission	☐ 513(g)
☐ Amendment	☐ Amendment	☐ Additional Information	☐ Additional Information	☐ Other *(describe submission):*
☐ Supplement	☐ Supplement			
	☐ Report			
	☐ Report Amendment			

Have you used or cited Standards in your submission? ☑ Yes ☐ No *(If Yes, please complete Section I, Page 5)*

SECTION B SUBMITTER, APPLICANT OR SPONSOR

Company / Institution Name: Acclarent, Inc.	Establishment Registration Number *(if known)*: 3005172759		
Division Name *(if applicable)*:	Phone Number *(including area code)*: (650) 687-5874		
Street Address: 1525-B O'Brien Drive	FAX Number *(including area code)*: (650) 687-4449		
City: Menlo Park	State / Province: CA	ZIP/Postal Code: 94025	Country: USA
Contact Name: Keri Yen			
Contact Title: Regulatory Affairs Manager	Contact E-mail Address: kyen@acclarent.com		

SECTION C APPLICATION CORRESPONDENT (e.g., consultant, if different from above)

Company / Institution Name: Same as Section B			
Division Name *(if applicable)*:	Phone Number *(including area code)*: ( )		
Street Address:	FAX Number *(including area code)*: ( )		
City:	State / Province:	ZIP/Postal Code:	Country:
Contact Name:			
Contact Title:	Contact E-mail Address:		

PSC Graphics: (301) 443-1090 EF

Questions? Contact FDA/CDRH/OCE/DID at CDRH-FOISTATUS@fda.hhs.gov or 301-796-8118

SECTION D1 — REASON FOR APPLICATION - PMA, PDP, OR HDE

- ☐ Withdrawal
- ☐ Additional or Expanded Indications
- ☐ Request for Extension
- ☐ Post-approval Study Protocol
- ☐ Request for Applicant Hold
- ☐ Request for Removal of Applicant Hold
- ☐ Request to Remove or Add Manufacturing Site
- ☐ Process change:
  - ☐ Manufacturing
  - ☐ Sterilization
  - ☐ Packaging
  - ☐ Other *(specify below)*
- ☐ Response to FDA correspondence:
- ☐ Change in design, component, or specification:
  - ☐ Software / Hardware
  - ☐ Color Additive
  - ☐ Material
  - ☐ Specifications
  - ☐ Other *(specify below)*
- ☐ Labeling change:
  - ☐ Indications
  - ☐ Instructions
  - ☐ Performance
  - ☐ Shelf Life
  - ☐ Trade Name
  - ☐ Other *(specify below)*
- ☐ Location change:
  - ☐ Manufacturer
  - ☐ Sterilizer
  - ☐ Packager
- ☐ Report Submission:
  - ☐ Annual or Periodic
  - ☐ Post-approval Study
  - ☐ Adverse Reaction
  - ☐ Device Defect
  - ☐ Amendment
- ☐ Change in Ownership
- ☐ Change in Correspondent
- ☐ Change of Applicant Address
- ☐ Other Reason *(specify)*:

SECTION D2 — REASON FOR APPLICATION - IDE

- ☐ New Device
- ☐ New Indication
- ☐ Addition of Institution
- ☐ Expansion / Extension of Study
- ☐ IRB Certification
- ☐ Termination of Study
- ☐ Withdrawal of Application
- ☐ Unanticipated Adverse Effect
- ☐ Notification of Emergency Use
- ☐ Compassionate Use Request
- ☐ Treatment IDE
- ☐ Continued Access
- ☐ Change in:
  - ☐ Correspondent / Applicant
  - ☐ Design / Device
  - ☐ Informed Consent
  - ☐ Manufacturer
  - ☐ Manufacturing Process
  - ☐ Protocol - Feasibility
  - ☐ Protocol - Other
  - ☐ Sponsor
- ☐ Report submission:
  - ☐ Current Investigator
  - ☐ Annual Progress Report
  - ☐ Site Waiver Report
  - ☐ Final
- ☐ Repose to FDA Letter Concerning:
  - ☐ Conditional Approval
  - ☐ Deemed Approved
  - ☐ Deficient Final Report
  - ☐ Deficient Progress Report
  - ☐ Deficient Investigator Report
  - ☐ Disapproval
  - ☐ Request Extension of Time to Respond to FDA
  - ☐ Request Meeting
  - ☐ Request Hearing
- ☐ Other Reason *(specify)*:

SECTION D3 — REASON FOR SUBMISSION - 510(k)

- ☑ New Device
- ☐ Additional or Expanded Indications
- ☐ Change in Technology
- ☐ Other Reason *(specify)*:

Questions? Contact FDA/CDRH/OCE/DID at CDRH-FOISTATUS@fda.hhs.gov or 301-796-8118

Records processed under FOIA Request 2011-7650; Released 1/25/12

SECTION E ADDITIONAL INFORMATION ON 510(K) SUBMISSIONS

Product codes of devices to which substantial equivalence is claimed

1	EOB	2		3		4	
5		6		7		8	

Summary of, or statement concerning, safety and effectiveness information

- [x] 510 (k) summary attached
- [ ] 510 (k) statement

Information on devices to which substantial equivalence is claimed *(if known)*

	510(k) Number		*Trade or Proprietary or Model Name*		*Manufacturer*
1	K080622	1	ENTity NasoView LED Nasopharyngoscope	1	OPTIM Incorporated
2	K944656	2	Sinuscope and Accessories	2	Sopro-Comeg
3	K002214	3	Sinuscope	3	Pollux Endoscopy Inc.
4		4		4	
5		5		5	
6		6		6	

SECTION F PRODUCT INFORMATION - APPLICATION TO ALL APPLICATIONS

Common or usual name or classification

Endoscope

	Trade or Proprietary or Model Name for This Device		Model Number
1	Acclarent Cyclops Multi-Angle Endoscope	1	TBD
2		2	
3		3	
4		4	
5		5	

FDA document numbers of all prior related submissions *(regardless of outcome)*

1	2	3	4	5	6
7	8	9	10	11	12

Data Included in Submission

- [x] Laboratory Testing
- [ ] Animal Trials
- [ ] Human Trials

SECTION G PRODUCT CLASSIFICATION - APPLICATION TO ALL APPLICATIONS

Product Code	C.F.R. Section *(if applicable)*	Device Class
EOB	21 CFR 874.4760	[ ] Class I [x] Class II [ ] Class III [ ] Unclassified

Classification Panel

Nasopharyngoscope (Flexible or Rigid), Ear Nose & Throat

Indications *(from labeling)*

The Acclarent Cyclops Multi-Angle Endoscope is intended to provide an endoscopic means to view the nasal cavity and nasopharynx.

FOI - Page 30 of 1276 Questions? Contact FDA/CDRH/OCE/DID at CDRH-FOISTATUS@fda.hhs.gov or 301-796-8118

Note: Submission of this information does not affect the need to submit a 2891 or 2891a Device Establishment Registration form.	FDA Document Number *(if known)*

SECTION H MANUFACTURING / PACKAGING / STERILIZATION SITES RELATING TO A SUBMISSION

☑ Original ☐ Add ☐ Delete	Facility Establishment Identifer (FEI) Number 3005172759	☑ Manufacturer ☐ Contract Manufacturer	☐ Contract Sterilizer ☐ Repackager / Relabeler	
Company / Institution Name Acclarent, Inc.		Establishment Registration Number 3005172759		
Division Name *(if applicable)*		Phone Number *(including area code)* (650) 687-5874		
Street Address 1525-B O'Brien Drive		FAX Number *(including area code)* (650) 687-4449		
City Menlo Park		State / Province CA	ZIP/Postal Code 94025	Country USA
Contact Name Keri Yen	Contact Title Regulatory Affairs Manager		Contact E-mail Address kyen@acclarent.com	

☑ Original ☐ Add ☐ Delete	Facility Establishment Identifer (FEI) Number (b)(4)	☐ Manufacturer ☑ Contract Manufacturer	☐ Contract Sterilizer ☐ Repackager / Relabeler	
Company / Institution Name (b)(4)		Establishment Registration Number (b)(4)		
Division Name *(if applicable)*		Phone Number *(including area code)* (b)(4)		
Street Address (b)(4)		FAX Number *(including area code)* (b)(4)		
City (b)(4)		State / Province	ZIP/Postal Code (b)(4)	Country
Contact Name (b)(4)	Contact Title (b)(4)		Contact E-mail Address (b)(4)	

☐ Original ☐ Add ☐ Delete	Facility Establishment Identifer (FEI) Number	☐ Manufacturer ☐ Contract Manufacturer	☐ Contract Sterilizer ☐ Repackager / Relabeler	
Company / Institution Name		Establishment Registration Number		
Division Name *(if applicable)*		Phone Number *(including area code)* ( )		
Street Address		FAX Number *(including area code)* ( )		
City		State / Province	ZIP/Postal Code	Country
Contact Name	Contact Title		Contact E-mail Address	

Questions? Contact FDA/CDRH/OCE/DID at CDRH-FOISTATUS@fda.hhs.gov or 301-796-8118

Records processed under FOIA Request 2011-7650; Released 1/25/12

SECTION I UTILIZATION OF STANDARDS

Note: Complete this section if your application or submission cites standards or includes a *"Declaration of Conformity to a Recognized Standard"* statement.

1	(b)(4)
2	
3	
4	
5	
6	
7	

Please include any additional standards to be cited on a separate page.

Public reporting burden for this collection of information is estimated to average 0.5 hour per response, including the time for reviewing instructions, searching existing data sources, gathering and maintaining the data needed, and completing reviewing the collection of information. Send comments regarding this burden estimate or any other aspect of this collection of information, including suggestions for reducing this burden to:

Food and Drug Administration
CDRH (HFZ-342)
9200 Corporate Blvd.
Rockville, MD 20850

An agency may not conduct or sponsor, and a person is not required to respond to, a collection of information unless it displays a currently valid OMB control

FOI - Page 32 of 1276 Questions? Contact FDA/CDRH/OCE/DID at CDRH-FOISTATUS@fda.hhs.gov or 301-796-8118

Records processed under FOIA Request 2011-7650; Released 1/25/12

(Continued from page 5 of FDA form 3514)

Standards No.	Standards Org.	Standards Title	Version	Date
(b)(4)				

Questions? Contact FDA/CDRH/OCE/DID at CDRH-FOISTATUS@fda.hhs.gov or 301-796-8118

Records processed under FOIA Request 2011-7650; Released 1/25/12

Acclarent

Acclarent, Inc.
1525-B O'Brien Drive
Menlo Park, CA 94025

Main 650.687.5888
Fax 650.687.5889
www.acclarent.com

February 26, 2010

U.S. Food and Drug Administration
Center for Devices and Radiological Health
Document Mail Center (WO66-G609)
10903 New Hampshire Avenue
Silver Spring, MD 20993-0002

RE: Traditional 510(k): Acclarent Cyclops Multi-Angle Endoscope

Dear Sir/Madam,

Acclarent, Inc. hereby submits two copies of a Traditional 510(k) application for the Acclarent Cyclops Multi-Angle Endoscope (Cyclops).

Endoscopy is a minimally invasive procedure that allows for visualization of the body cavity interior. For otolaryngologists, an endoscope is commonly used to view the nasal cavity or nasopharynx while performing surgeries such as endoscopic sinus surgery. Endoscopes are generally available with a rigid or flexible shaft and can be connected to a camera head. Different angled endoscopes are available to the surgeons for visualization of different structures within the body cavity; common angles include 0°, 30°, and 70°.

The Acclarent Cyclops Multi-Angle Endoscope is intended to provide the physician with an endoscopic means to view a body cavity for nasal cavity or nasopharynx procedures. Cyclops is a rigid endoscope designed with a standard eyepiece that is compatible with a standard camera coupler. By rotating a dial, Cyclops allows the surgeon to view angles between 10° and 100° without requiring multiple endoscopes. Additionally, the subject device allows the surgeon to rotate the shaft 320° while visualizing the body cavity. Cyclops minimizes the need for multiple endoscopes when performing endoscopic surgery in the nose. A protection tube is also provided to protect the device during steam sterilization.

Acclarent has identified three Class II predicate devices for the subject device:

1. ENTity NasoView LED Nasopharyngoscope (K080622) manufactured by OPTIM Incorporated (Class II device, Product Code: EOB, Regulation Number 874.4760)
2. Sinuscope (K002214) manufactured by Pollux Endoscopy, Inc. (Class II device, Product Code: EOB, Regulation Number 874.4760)
3. Optus SinuScope (K944656) manufactured by Sopro-Comeg (Class II device, Product Code: EOB, Regulation Number 874.4760)

The indications for use, performance, and fundamental scientific technology of the Acclarent Cyclops Multi-Angle Endoscope are substantially equivalent to the predicate devices. Additionally, Cyclops does not raise any new issues of safety or effectiveness. Therefore, the subject device can be similarly classified as Class II, Product Code EOB, and regulation number 874.4760.

As required under the Medical Device User Fee and Modernization Act of 2002 (MDUFMA), Acclarent, Inc has submitted the user fees associated with this Premarket Notification. A copy of the

Questions? Contact FDA/CDRH/OCE/DID at CDRH-FOISTATUS@fda.hhs.gov or 301-796-8118

Records processed under FOIA Request 2011-7650; Released 1/25/12

Medical Device User Fee Coversheet (Payment Identification Number: MD6048120-956733) is included in this submission.

Acclarent, Inc. is also providing an electronic copy of this submission, which is an exact duplicate, per the guidance set forth by FDA.

Acclarent, Inc. regards the contents of this submission to be proprietary commercial information entitled to the full confidentiality safeguards of 21 CFR Parts 20.45, 20.61 and 807.95(b).
If you have any questions regarding this submission, please do not hesitate to contact me by phone- (650) 687-5874, fax (650) 687-4449 or by email at kyen@acclarent.com. Alternatively, you may also contact Mary Bellack at (650) 687-5858 or by email at mary.bellack@acclarent.com.

Sincerely,

Keri Yen
Regulatory Affairs Manager

Enclosures (2 copies)

Questions? Contact FDA/CDRH/OCE/DID at CDRH-FOISTATUS@fda.hhs.gov or 301-796-8118

Records processed under FOIA Request 2011-7650; Released 1/25/12

Traditional 510(k)
Acclarent Cyclops Multi-Angle Endoscope

Class II (Product Code : EOB)

Submitted:
February 26, 2010

FOI - Page 36 of 1276
Questions? Contact FDA/CDRH/OCE/DID at CDRH-FOISTATUS@fda.hhs.gov or 301-796-8118

Records processed under FOIA Request 2011-7650; Released 1/25/12

SUBMISSION SUMMARY

Acclarent, Inc. hereby submits two copies of a Traditional 510(k) application for the Acclarent Cyclops Multi-Angle Endoscope (Cyclops).

The Acclarent Cyclops Multi-Angle Endoscope is intended to provide the physician with an endoscopic means to view a body cavity for nasal cavity or nasopharynx procedures. Cyclops is a rigid endoscope designed with a standard eyepiece that is compatible with a standard camera coupler. By rotating a dial, Cyclops allows the surgeon to view angles between 10° and 100° without requiring multiple endoscopes. Additionally, the subject device allows the surgeon to rotate the shaft 320° while visualizing the body cavity. Cyclops minimizes the need for multiple endoscopes when performing endoscopic surgery in the nose. A protection tube is also provided to protect the device during steam sterilization.

Acclarent has identified three Class II predicate devices for the subject device:

1. ENTity NasoView LED Nasopharyngoscope (K080622) manufactured by OPTIM Incorporated (Class II device, Product Code: EOB, Regulation Number 874.4760)
2. Sinuscope (K002214) manufactured by Pollux Endoscopy, Inc. (Class II device, Product Code: EOB, Regulation Number 874.4760)
3. Optus SinuScope (K944656) manufactured by Sopro-Comeg (Class II device, Product Code: EOB, Regulation Number 874.4760)

The indications for use, performance, and fundamental scientific technology of the Acclarent Cyclops Multi-Angle Endoscope are substantially equivalent to the predicate devices. The subject device is intended for use in the same anatomy, nasal cavity and nasopharynx, as the predicate devices. It is a reusable device and its attributes are similar to the predicate devices in shaft body diameter, illumination method, fixed focus, depth of view, and working length

(b)(4)

(b)(4) The Acclarent Cyclops Multi-Angle Endoscope does not raise any new issues of safety or effectiveness. Therefore, the subject device can be similarly classified as Class II, Product Code EOB, and regulation number 874.4760.

Questions? Contact FDA/CDRH/OCE/DID at CDRH-FOISTATUS@fda.hhs.gov or 301-796-8118

Records processed under FOIA Request 2011-7650; Released 1/25/12

TABLE OF CONTENTS

SUBMISSION SUMMARY 2

TABLE OF CONTENTS 3

TABLES 4

FIGURES 4

APPENDICES 4

SECTION 1: PREMARKET NOTIFICATION TRUTHFUL AND ACCURATE STATEMENT 5

SECTION 2: DEVICE DESCRIPTION 6

A. Acclarent Cyclops Multi-Angle Endoscope 6
B. Principles of Operation 7
C. Intended Use 8
D. Device Specifications 8
E. Materials Identification 9

SECTION 3: SUBSTANTIAL EQUIVALENCY 10

A. Introduction 10
B. Predicate Devices 10
C. Comparison with Predicate Device 10
D. Indications for Use 13
E. Physical Characteristics 13
F. Performance 13
G. Materials Identification 14
H. Summary 14

SECTION 4: PROPOSED LABELING 15

A. Packaging Label 15
B. Instructions for Use 15

SECTION 5: BENCH TESTING 16

A. Results 16

SECTION 6: BIOCOMPATIBILITY 19

SECTION 7: CLEANING & STERILIZATION INFORMATION 20

A. Sterilization Method 20
B. Sterilization Validation 20
C. Cleaning Method 21
D. Cleaning Validation 21
E. Reuse 21
F. Packaging Description 22

Questions? Contact FDA/CDRH/OCE/DID at CDRH-FOISTATUS@fda.hhs.gov or 301-796-8118

Records processed under FOIA Request 2011-7650; Released 1/25/12

TABLES

Table 1. Acclarent Cyclops Multi-Angle Endoscope Device Specifications 8
Table 2. Acclarent Cyclops Multi-Angle Endoscope Material Identification 9
Table 3. Comparison of the Subject Device to the Predicate Devices 11
Table 4: Acclarent Cyclops Multi-Angle Endoscope Test Specifications and Results 16
Table 5. Summary of Illumination Results at Various Angles 17
Table 6. Summary of Scope Resolution Results 17
Table 7. Summary of Dial Actuation Forces 18
Table 8. Summary of Temperature 18
Table 9: Summary of Materials and Patient Contact 19
Table 10. Summary of Sterilization Validation Parameters 20
Table 11. Summary of Manual Cleaning Validation Parameters 21
Table 12. Summary of Automated Cleaning Validation Parameters 21

FIGURES

Figure 1. Graphic Depiction of the Acclarent Cyclops Multi-Angle Endoscope 7
Figure 2. Endoscopic Images of Ostiometal Complex at 10° and 100° 8
Figure 3. Graphic Representations of Packaging Configuration 22

APPENDICES

APPENDIX A: 510(k) SUMMARY 23
APPENDIX B: INDICATIONS FOR USE STATEMENT 25
APPENDIX C: DECLARATION OF CONFORMITY 26
APPENDIX D: DEVICE LABELING 27
APPENDIX E: PREDICATE DEVICE LABELING 28
APPENDIX F: STERILIZATION VALIDATION 29
APPENDIX G: CLEANING VALIDATION 30

FOI - Page 39 of 1276
Questions? Contact FDA/CDRH/OCE/DID at CDRH-FOISTATUS@fda.hhs.gov or 301-796-8118

Records processed under FOIA Request 2011-7650; Released 1/25/12

SECTION 1: PREMARKET NOTIFICATION TRUTHFUL AND ACCURATE STATEMENT

[As required by 21 CFR §807.87(j)]

I certify that, in my capacity as Regulatory Affairs Manager at Acclarent, Inc., to the best of my knowledge, all data and information submitted in the premarket notification are truthful and accurate and that no material fact has been omitted.

Keri Yen
Regulatory Affairs Manager

February 26, 2010
Date

[510(k) Number]

FOI - Page 40 of 1276
Questions? Contact FDA/CDRH/OCE/DID at CDRH-FOISTATUS@fda.hhs.gov or 301-796-8118

Records processed under FOIA Request 2011-7650; Released 1/25/12

SECTION 2: DEVICE DESCRIPTION

A. Acclarent Cyclops Multi-Angle Endoscope

The Acclarent Cyclops Multi-Angle Endoscope is intended to provide a physician with an endoscopic means to view the nasal cavity or nasopharynx. The following product description and principles of operation of the Cyclops Mulit-Angle Endoscope call out features illustrated in **Figure 1**, identified by the letters A-I.

(b)(4)

(b)(4)

Cyclops is a reusable device that will be packaged and sold to physicians as a non-sterile device. The device must be sterilized prior to use via steam sterilization.

Bench testing has been conducted on Cyclops on non-sterile and sterile samples to illustrate conformance with the device specifications (refer to **Section 5**).

See **Figure 1** for a graphic representation of the subject device.

Questions? Contact FDA/CDRH/OCE/DID at CDRH-FOISTATUS@fda.hhs.gov or 301-796-8118

Records processed under FOIA Request 2011-7650; Released 1/25/12

(b)(4)

Figure 1. Graphic Depiction of the Acclarent Cyclops Multi-Angle Endoscope

B. Principles of Operation

The Acclarent Cyclops Multi-Angle Endoscope is a rigid endoscope that allows for the visualization of the nasal cavity and nasopharynx. Cyclops is designed with a 4 mm diameter shaft (F) and must be steam sterilized according to the Instructions for Use prior to use. Cyclops has standard connections and adapters (H,I) on the light post (G) that allow for connection to a standard medical light source. The physician has the ability to attach a camera head and/or light cable onto the eyepiece located on the proximal end of the device (A). During use, the physician inserts Cyclops into the nasal cavity or nasopharynx where visualization is desired. (b)(4) (b)(4) (b)(4) The subject device is capable of changing the direction of view from 10° to 100° using the direction of view dial (C), which minimizes the need for multiple exchanges of endoscopes during procedures. (b)(4) (b)(4) (b)(4).

(b)(4)

FOI - Page 42 of 1276
Questions? Contact FDA/CDRH/OCE/DID at CDRH-FOISTATUS@fda.hhs.gov or 301-796-8118

Records processed under FOIA Request 2011-7650; Released 1/25/12

(b)(4)

Additionally, the Acclarent Cyclops Multi-Angle Endoscope has the ability to alter the rotation of view by rotating the shaft of the device. The rotation of view is controlled by the shaft rotation dial (D), which turns the optical assembly (lens, prism, illumination fibers, and shaft) and allows the direction of view to rotate. There is a visual marker on the shaft rotation dial to denote the direction the prism is pointed.

Cyclops is provided to the customer as a non-sterile product. The device is re-useable and may be sterilized repeated times via steam sterilization. A protection tube is provided with the endoscope to protect the shaft of the device during sterilization; the protection tube attaches to the sheath locking system (E). Instructions for cleaning and sterilization are detailed in the Instructions for Use. See **Section 7** for additional information regarding cleaning, disinfection and sterilization.

C. Intended Use

The Acclarent Cyclops Multi-Angle Endoscope is intended to provide an endoscopic means to view the nasal cavity or nasopharynx.

D. Device Specifications

Device specifications for the Acclarent Cyclops Multi-Angle Endoscope were developed based on clinical feedback and internal design control requirements. Cyclops is a reusable rigid endoscope that is capable of providing an endoscopic view of the nasal cavity or nasopharynx at angles ranging from 10° to 100°. The intended use and fundamental scientific technology of the subject device is similar to the predicate devices. The Cyclops device specifications are listed in **Table 1**.

Table 1. (b)(4) s

(b)(4)

FOI - Page 43 of 1276
Questions? Contact FDA/CDRH/OCE/DID at CDRH-FOISTATUS@fda.hhs.gov or 301-796-8118

Records processed under FOIA Request 2011-7650; Released 1/25/12

(b)(4)

E. Materials Identification

Cyclops utilizes materials that are common in the medical device industry. **Table 2** identifies the materials used in the subject device.

Table 2. (b)(4)

Component	Subject Device (Cyclops)

(b)(4)

FOI - Page 44 of 1276
Questions? Contact FDA/CDRH/OCE/DID at CDRH-FOISTATUS@fda.hhs.gov or 301-796-8118

Records processed under FOIA Request 2011-7650; Released 1/25/12

SECTION 3: SUBSTANTIAL EQUIVALENCY

A. Introduction

(b)(4)

B. Predicate Devices

(b)(4)

C. Comparison with Predicate Device

A comparison of the Acclarent Cyclops Multi-Angle Endoscope with the predicate devices is provided in **Table 3**. This table demonstrates that the subject device is substantially equivalent to the predicate devices for its indication for use, performance, and technological characteristics.

Questions? Contact FDA/CDRH/OCE/DID at CDRH-FOISTATUS@fda.hhs.gov or 301-796-8118

Records processed under FOIA Request 2011-7650; Released 1/25/12

Table 3. Comparison of the Subject Device to the Predicate Devices

(b)(4)

FOI - Page 46 of 1276
Questions? Contact FDA/CDRH/OCE/DID at CDRH-FOISTATUS@fda.hhs.gov or 301-796-8118

Records processed under FOIA Request 2011-7650; Released 1/25/12

(b)(4)

FOI - Page 47 of 1276
Questions? Contact FDA/CDRH/OCE/DID at CDRH-FOISTATUS@fda.hhs.gov or 301-796-8118

Records processed under FOIA Request 2011-7650; Released 1/25/12

D. Indications for Use

The Acclarent Cyclops Multi-Angle Endoscope is intended to provide an endoscopic means to view the nasal cavity or nasopharynx. The indications for use statement can be found in **Appendix B**.

E. Physical Characteristics

(b)(4)

F. Performance

Performance testing on Cyclops was conducted under non-sterile and sterile conditions. The results met device specifications as demonstrated in **Section 5**.

FOI - Page 48 of 1276
Questions? Contact FDA/CDRH/OCE/DID at CDRH-FOISTATUS@fda.hhs.gov or 301-796-8118

Records processed under FOIA Request 2011-7650; Released 1/25/12

G. Materials Identification

(b)(4)

(b)(4) as demonstrated in **Table 5**.

H. Summary

The Acclarent Cyclops Multi-Angle Endoscope is substantially equivalent to the predicate devices in indication for use, performance, and fundamental scientific technology.

FOI - Page 49 of 1276
Questions? Contact FDA/CDRH/OCE/DID at CDRH-FOISTATUS@fda.hhs.gov or 301-796-8118

Records processed under FOIA Request 2011-7650; Released 1/25/12

SECTION 4: PROPOSED LABELING

In developing the packaging label and instruction for use, Acclarent consulted with "Labeling Reusable Medical Devices for Reprocessing in Health Care Facilities: FDA Reviewer Guidance", which was issued by FDA in April 1996 (UCM080268).

A. Packaging Label

A representative copy of the draft labeling is provided in **Appendix D**. At this time, no advertising and promotional materials for the Acclarent Cyclops Multi-Angle Endoscope have been developed.

B. Instructions for Use

A copy of the draft Instructions for Use for Cyclops is provided in **Appendix D**. Disassembly, manual cleaning, and mechanical cleaning instructions are incorporated into the Instructions for Use.

(b)(4)

Additional information regarding cleaning and sterilization of the Acclarent Cyclops Multi-Angle Endoscope is described in **Section 7**.

FOI - Page 50 of 1276
Questions? Contact FDA/CDRH/OCE/DID at CDRH-FOISTATUS@fda.hhs.gov or 301-796-8118

Records processed under FOIA Request 2011-7650; Released 1/25/12

SECTION 5: BENCH TESTING

A. Results

The subject device, Acclarent Cyclops Multi-Angle Endoscope, was evaluated to ensure that it functions in accordance with the design specifications and indications for use. (b)(4)

(b)(4)

(b)(4)

Table 4: (b)(4)

(b)(4)

Questions? Contact FDA/CDRH/OCE/DID at CDRH-FOISTATUS@fda.hhs.gov or 301-796-8118

Records processed under FOIA Request 2011-7650; Released 1/25/12

(b)(4)

Table 5 (b)(4)

(b)(4)

(b)(4)

Table 6 (b)(4)

(b)(4)

Questions? Contact FDA/CDRH/OCE/DID at CDRH-FOISTATUS@fda.hhs.gov or 301-796-8118

Records processed under FOIA Request 2011-7650; Released 1/25/12

(b)(4)

Table 7 (b)(4)

(b)(4)

(b)(4)

Table 8 (b)(4)

(b)(4)

Questions? Contact FDA/CDRH/OCE/DID at CDRH-FOISTATUS@fda.hhs.gov or 301-796-8118

Records processed under FOIA Request 2011-7650; Released 1/25/12

SECTION 6: BIOCOMPATIBILITY

(b)(4)

FOI - Page 54 of 1276
Questions? Contact FDA/CDRH/OCE/DID at CDRH-FOISTATUS@fda.hhs.gov or 301-796-8118

Records processed under FOIA Request 2011-7650; Released 1/25/12

SECTION 7: CLEANING & STERILIZATION INFORMATION

Acclarent considers the Acclarent Cyclops Multi-Angle Endoscope to be a semicritical device according to the definitions presented in AAMI TIR12:2004 and "Labeling Reusable Medical Devices for Reprocessing in Health Care Facilities: FDA Reviewer Guidance", which was issued by FDA in April 1996 (UCM080268). Under these standards, semicritical devices should be cleaned and sterilized, or be subjected to high-level disinfection at a minimum, to provide reasonable assurance during reprocessing.

A. Sterilization Method

The Acclarent Cyclops Multi-Angle Endoscope will be provided non-sterile to the customer and must be sterilized prior to use. The Acclarent Cyclops Multi-Angle Endoscope can be sterilized using steam sterilization. A protection tube is provided with the subject device, which protects the device during sterilization.

Information regarding sterilization method and parameters are provided in the Instructions for Use (**Appendix D**), and are in accordance with "Labeling Reusable Medical Devices for Reprocessing in Health Care Facilities: FDA Reviewer Guidance", which was issued by FDA in April 1996 (UCM080268).

B. Sterilization Validation

(b)(4)

Questions? Contact FDA/CDRH/OCE/DID at CDRH-FOISTATUS@fda.hhs.gov or 301-796-8118

(b)(4),Technical Information-CCI
Records processed under FOIA Request 2011-7650; Released 1/25/12

Questions? Contact FDA/CDRH/OCE/DID at CDRH-FOISTATUS@fda.hhs.gov or 301-796-8118

(b)(4),Technical Information-CCI
Records processed under FOIA Request 2011-7650; Released 1/25/12

Questions? Contact FDA/CDRH/OCE/DID at CDRH-FOISTATUS@fda.hhs.gov or 301-796-8118

(b)(4),Design Specifications

Records processed under FOIA Request 2011-7650; Released 1/25/12

Questions? Contact FDA/CDRH/OCE/DID at CDRH-FOISTATUS@fda.hhs.gov or 301-796-8118

(b)(4),Design Specifications

Records processed under FOIA Request 2011-7650; Released 1/25/12

Questions? Contact FDA/CDRH/OCE/DID at CDRH-FOISTATUS@fda.hhs.gov or 301-796-8118

(b)(4),Design Specifications

Records processed under FOIA Request 2011-7650; Released 1/25/12

Questions? Contact FDA/CDRH/OCE/DID at CDRH-FOISTATUS@fda.hhs.gov or 301-796-8118

(b)(4),Design Specifications

Records processed under FOIA Request 2011-7650; Released 1/25/12

Questions? Contact FDA/CDRH/OCE/DID at CDRH-FOISTATUS@fda.hhs.gov or 301-796-8118

(b)(4),Design Specifications

Records processed under FOIA Request 2011-7650; Released 1/25/12

Questions? Contact FDA/CDRH/OCE/DID at CDRH-FOISTATUS@fda.hhs.gov or 301-796-8118

Records processed under FOIA Request 2011-7650; Released 1/25/12

Questions? Contact FDA/CDRH/OCE/DID at CDRH-FOISTATUS@fda.hhs.gov or 301-796-8118

Records processed under FOIA Request 2011-7650; Released 1/25/12

Questions? Contact FDA/CDRH/OCE/DID at CDRH-FOISTATUS@fda.hhs.gov or 301-796-8118

Records processed under FOIA Request 2011-7650; Released 1/25/12

Questions? Contact FDA/CDRH/OCE/DID at CDRH-FOISTATUS@fda.hhs.gov or 301-796-8118

Records processed under FOIA Request 2011-7650; Released 1/25/12

Questions? Contact FDA/CDRH/OCE/DID at CDRH-FOISTATUS@fda.hhs.gov or 301-796-8118

Records processed under FOIA Request 2011-7650; Released 1/25/12

Questions? Contact FDA/CDRH/OCE/DID at CDRH-FOISTATUS@fda.hhs.gov or 301-796-8118

Records processed under FOIA Request 2011-7650; Released 1/25/12

Questions? Contact FDA/CDRH/OCE/DID at CDRH-FOISTATUS@fda.hhs.gov or 301-796-8118

Records processed under FOIA Request 2011-7650; Released 1/25/12

Questions? Contact FDA/CDRH/OCE/DID at CDRH-FOISTATUS@fda.hhs.gov or 301-796-8118

Records processed under FOIA Request 2011-7650; Released 1/25/12

Questions? Contact FDA/CDRH/OCE/DID at CDRH-FOISTATUS@fda.hhs.gov or 301-796-8118

Records processed under FOIA Request 2011-7650; Released 1/25/12

Questions? Contact FDA/CDRH/OCE/DID at CDRH-FOISTATUS@fda.hhs.gov or 301-796-8118

Records processed under FOIA Request 2011-7650; Released 1/25/12

Acclarent	Labeling Specification	Document No.: LBL005098
	Product Label, ***Cyclops Box End***	Revision: 1

1. Specifications:

- (b)(4)
-
-

DRAFT

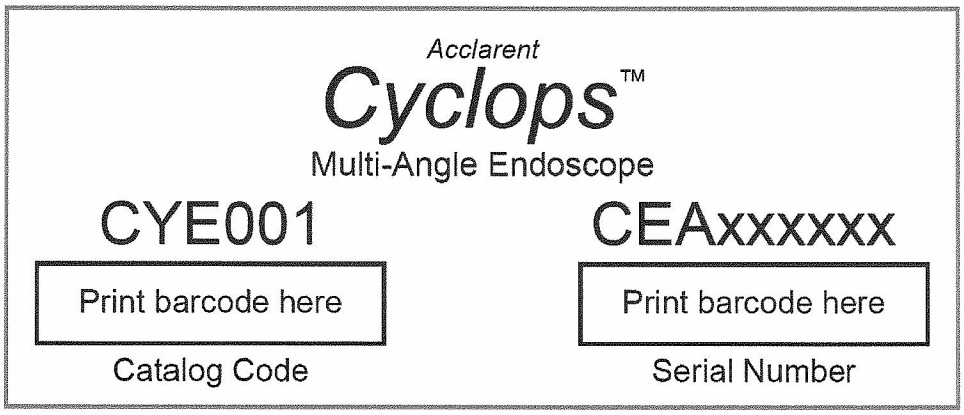

FOI - Page 72 of 1276
Questions? Contact FDA/CDRH/OCE/DID at CDRH-FOISTATUS@fda.hhs.gov or 301-796-8118

Records processed under FOIA Request 2011-7650; Released 1/25/12

Acclarent	Labeling Specification	Document No.: LBL005097
	Product Label, ***Cyclops Box Top***	Revision: 1

(b)(4)

Acclarent, Inc. Confidential

Questions? Contact FDA/CDRH/OCE/DID at CDRH-FOISTATUS@fda.hhs.gov or 301-796-8118

Records processed under FOIA Request 2011-7650; Released 1/25/12

APPENDIX E: PREDICATE DEVICE LABELING

FOI - Page 74 of 1276
Questions? Contact FDA/CDRH/OCE/DID at CDRH-FOISTATUS@fda.hhs.gov or 301-796-8118

Records processed under FOIA Request 2011-7650; Released 1/25/12

510(k) Premarket Notification

Device Classification Name	Nasopharyngoscope (Flexible Or Rigid)
510(K) Number	K944656
Device Name	OPTUS SINUSCOPES AND ACCESSORIES
Applicant	OPTUS, INC. 1200 South Parker Rd. Denver, CO 80231
Contact	Peter Duffy
Regulation Number	874.4760
Classification Product Code	EOB
Date Received	09/21/1994
Decision Date	01/26/1995
Decision	Substantially Equivalent (SE)
Classification Advisory Committee	Ear Nose & Throat
Review Advisory Committee	Ear Nose & Throat
Statement/Summary/Purged Status	Statement Only
Type	Traditional
Reviewed By Third Party	No
Expedited Review	

Questions? Contact FDA/CDRH/OCE/DID at CDRH-FOISTATUS@fda.hhs.gov or 301-796-8118

Records processed under FOIA Request 2011-7650; Released 1/25/12

Sinuscopy
Otoscopy
Laryngoscopy

SOPRO COMEG - 2.7 mm Telescopes

Sinuscope

Features and Benefits:

- Directions of view : 0°, 30° and 70°
- Working length about : 175mm

This arthroscope also exists with Diam. 4.0mm and with directions of view of 0°, 30°, 45° and 70°.

SOPRO COMEG - Handles

Handles round or flat

Features and Benefits:

- For telescopes 2,7 and 4,0 mm

SOPRO COMEG - Suction-irrigation handle

Suction-irrigation handle

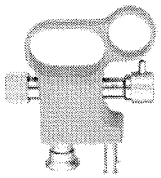

Our full range in Sinuscopyhas been conceived and developed to meet your specific needs and requirements.
All our products, including accessories, are available in our catalogue.
Just feel free to order it by clicking on the button below.

- Telescopes
- Handles
- Suction-irrigation handle

Accessories

- Maintenance/cleaning kit
- Baskets for sterilization

Questions? Contact FDA/CDRH/OCE/DID at CDRH-FOISTATUS@fda.hhs.gov or 301-796-8118

(b)(4),Technical Information-CCI
Records processed under FOIA Request 2011-7650; Released 1/25/12

Questions? Contact FDA/CDRH/OCE/DID at CDRH-FOISTATUS@fda.hhs.gov or 301-796-8118

(b)(4),Technical Information-CCI
Records processed under FOIA Request 2011-7650; Released 1/25/12

Questions? Contact FDA/CDRH/OCE/DID at CDRH-FOISTATUS@fda.hhs.gov or 301-796-8118

(b)(4),Technical Information-CCI
Records processed under FOIA Request 2011-7650; Released 1/25/12

Questions? Contact FDA/CDRH/OCE/DID at CDRH-FOISTATUS@fda.hhs.gov or 301-796-8118

(b)(4),Technical Information-CCI
Records processed under FOIA Request 2011-7650; Released 1/25/12

Questions? Contact FDA/CDRH/OCE/DID at CDRH-FOISTATUS@fda.hhs.gov or 301-796-8118

(b)(4),Technical Information-CCI
Records processed under FOIA Request 2011-7650; Released 1/25/12

Questions? Contact FDA/CDRH/OCE/DID at CDRH-FOISTATUS@fda.hhs.gov or 301-796-8118

(b)(4),Technical Information-CCI
Records processed under FOIA Request 2011-7650; Released 1/25/12

Questions? Contact FDA/CDRH/OCE/DID at CDRH-FOISTATUS@fda.hhs.gov or 301-796-8118

(b)(4),Technical Information-CCI
Records processed under FOIA Request 2011-7650; Released 1/25/12

Questions? Contact FDA/CDRH/OCE/DID at CDRH-FOISTATUS@fda.hhs.gov or 301-796-8118

(b)(4),Technical Information-CCI
Records processed under FOIA Request 2011-7650; Released 1/25/12

Questions? Contact FDA/CDRH/OCE/DID at CDRH-FOISTATUS@fda.hhs.gov or 301-796-8118

(b)(4),Technical Information-CCI
Records processed under FOIA Request 2011-7650; Released 1/25/12

Questions? Contact FDA/CDRH/OCE/DID at CDRH-FOISTATUS@fda.hhs.gov or 301-796-8118

(b)(4),Technical Information-CCI
Records processed under FOIA Request 2011-7650; Released 1/25/12

Questions? Contact FDA/CDRH/OCE/DID at CDRH-FOISTATUS@fda.hhs.gov or 301-796-8118

Records processed under FOIA Request 2011-7650; Released 1/25/12

Questions? Contact FDA/CDRH/OCE/DID at CDRH-FOISTATUS@fda.hhs.gov or 301-796-8118

Records processed under FOIA Request 2011-7650; Released 1/25/12

DEPARTMENT OF HEALTH & HUMAN SERVICES

Public Health Service

Food and Drug Administration
9200 Corporate Boulevard
Rockville MD 20850

APR - 2 2008

OPTIM Incorporated
c/o Robert Krupa
64 Technology Park Road
Sturbridge, MA 01566-1253

Re: K080622
Trade/Device Name: ENTity NasoView LED Nasopharyngoscope
Regulation Number: 21 CFR 874.4760
Regulation Name: Nasopharyngoscope (flexible or rigid) and accessories
Regulatory Class: Class II
Product Code: EOB
Dated: March 5, 2008
Received: March 5, 2008

Dear Dr. Krupa:

We have reviewed your Section 510(k) premarket notification of intent to market the device referenced above and have determined the device is substantially equivalent (for the indications for use stated in the enclosure) to legally marketed predicate devices marketed in interstate commerce prior to May 28, 1976, the enactment date of the Medical Device Amendments, or to devices that have been reclassified in accordance with the provisions of the Federal Food, Drug, and Cosmetic Act (Act) that do not require approval of a premarket approval application (PMA). You may, therefore, market the device, subject to the general controls provisions of the Act. The general controls provisions of the Act include requirements for annual registration, listing of devices, good manufacturing practice, labeling, and prohibitions against misbranding and adulteration.

If your device is classified (see above) into either class II (Special Controls) or class III (PMA), it may be subject to such additional controls. Existing major regulations affecting your device can be found in the Code of Federal Regulations, Title 21, Parts 800 to 898. In addition, FDA may publish further announcements concerning your device in the Federal Register.

Please be advised that FDA's issuance of a substantial equivalence determination does not mean that FDA has made a determination that your device complies with other requirements of the Act or any Federal statutes and regulations administered by other Federal agencies. You must comply with all the Act's requirements, including, but not limited to: registration and listing (21 CFR Part 807); labeling (21 CFR Part 801); good manufacturing practice requirements as set forth in the quality systems (QS) regulation (21 CFR Part 820); and if applicable, the electronic product radiation control provisions (Sections 531-542 of the Act); 21 CFR 1000-1050.

Questions? Contact FDA/CDRH/OCE/DID at CDRH-FOISTATUS@fda.hhs.gov or 301-796-8118

Records processed under FOIA Request 2011-7650; Released 1/25/12

This letter will allow you to begin marketing your device as described in your Section 510(k) premarket notification. The FDA finding of substantial equivalence of your device to a legally marketed predicate device results in a classification for your device and thus, permits your device to proceed to the market.

If you desire specific advice for your device on our labeling regulation (21 CFR Part 801), please contact the Center for Devices and Radiological Health's (CDRH's) Office of Compliance at (240) 276-0115. Also, please note the regulation entitled, "Misbranding by reference to premarket notification" (21CFR Part 807.97). For questions regarding postmarket surveillance, please contact CDRH's Office of Surveillance and Biometric's (OSB's) Division of Postmarket Surveillance at 240-276-3474. For questions regarding the reporting of device adverse events (Medical Device Reporting (MDR)), please contact the Division of Surveillance Systems at 240-276-3464. You may obtain other general information on your responsibilities under the Act from the Division of Small Manufacturers, International and Consumer Assistance at its toll-free number (800) 638-2041 or (240) 276-3150 or at its Internet address http://www.fda.gov/cdrh/industry/support/index.html.

Sincerely yours,

Malvina B. Eydelman, M.D.
Director
Division of Ophthalmic and Ear, Nose
and Throat Devices
Office of Device Evaluation
Center for Devices and
Radiological Health

Enclosure

Questions? Contact FDA/CDRH/OCE/DID at CDRH-FOISTATUS@fda.hhs.gov or 301-796-8118

Records processed under FOIA Request 2011-7650; Released 1/25/12

K080622

Indications for Use Statement

510(k) Number (if known): K080622

Device Name: OPTIM's ENTity NasoView LED Nasopharyngoscope

Indications for Use: For oral or nasal introduction for the examination of the upper airway from the nasal passage to the vocal cords.

Prescription Use X (Per 21 C.F.R. 801.109) AND/OR Over-The-Counter Use ____ (Per 21 C.F.R. 807 Subpart C)

(PLEASE DO NOT WRITE BELOW THIS LINE -- CONTINUE ON ANOTHER PAGE IF NEEDED)

Concurrence of CDRH, Office of Device Evaluation (ODE)

(Division Sign-Off)
Division of Ophthalmic Ear, Nose and Throat Devises

510(k) Number K080622

V. - 1

Questions? Contact FDA/CDRH/OCE/DID at CDRH-FOISTATUS@fda.hhs.gov or 301-796-8118

Records processed under FOIA Request 2011-7650; Released 1/25/12

K080622

510(k) SUMMARY

OPTIM's ENTity NasoView LED Nasopharyngoscope

APR - 2 2008

Submitter's Name, Address, Telephone Number, Contact Person and Date Prepared

OPTIM Incorporated

64 Technology Park Road
Sturbridge, MA 01566-1253

Phone: (508) 347-5100
Facsimile: (508) 347-2380

Contact Person: Robert Krupa

Date Prepared: March 5, 2008

Name of Device and Name/Address of Sponsor

ENTity NasoView LED Nasopharyngoscope

OPTIM, Incorporated
64 Technology Park Road
Sturbridge, MA 01566-1253

Common or Usual Name

Nasopharyngoscope

Classification Name and Product Code

Nasopharyngoscope; EOB

Predicate Devices

OL-1 Airway Fiberscope, K864821
Vision-Sciences EF100 nasopharyngoscope, K942265
Vision-Sciences ENT-3000 nasopharyngoscope, K050972
Vision-Sciences ENT-5000 nasopharyngoscope, K072073

Purpose of the Special 510(k) Notice

The ENTity NasoView is a modification of the OL-1 Airway Fiberscope.

FOI - Page 91 of 1276 Questions? Contact FDA/CDRH/OCE/DID at CDRH-FOISTATUS@fda.hhs.gov or 301-796-8118

Records processed under FOIA Request 2011-7650; Released 1/25/12

K080622

Intended Use / Indications for Use

For oral or nasal introduction for the examination of the upper airway from the nasal passage to the vocal cords.

Technological Characteristics

The ENTity NasoView is a modification of the OL-1 Airway Fiberscope. The device has been modified to include a battery-operated LED light source internal to the device control body. An accessory charger is provided for charging the battery outside the scope.

Performance Data

In support of this Special 510(k), OPTIM has certified compliance with 21 CFR § 820.30, Design Control Requirements, including a risk analysis assessment. Verification and validation activities have been completed for the device modifications.

Substantial Equivalence

ENTity NasoView has the same intended use and indications for use, and similar technological characteristics and principles of operation, as the predicates. The modifications incorporated in the ENTity NasoView do not raise any new questions of safety or effectiveness. Validation and verification testing demonstrates that the ENTity NasoView is as safe and effective as the predicate devices. Thus, the ENTity NasoView is substantially equivalent to legally marketed devices.

FOI - Page 92 of 1276 Questions? Contact FDA/CDRH/OCE/DID at CDRH-FOISTATUS@fda.hhs.gov or 301-796-8118

Records processed under FOIA Request 2011-7650; Released 1/25/12

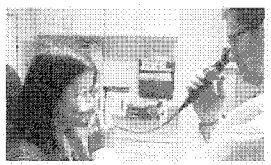

Products
Services
Our News
Resources
About Us
Contact Us
Home

ENTity NasoView

ENTity NasoView Flexible LED Nasopharyngoscope

OPTIM's revolutionary new ENTity NasoView Flexible LED Nasopharyngoscope offers an unmatched high intensity LED light source that delivers superior resolution, complete mobility and maximum flexibility.

The ENTity unit also offers an excellent image of inside the nasal cavity, and unsurpassed patient comfort. The ENTity NasoView is designed for examination and diagnosis of nasal sinuses, nasal cavity, maxillary sinus, nasopharynx, and vocal cords.

By freeing the physician from the "tug" of light guides, external light sources and the need for AC/DC wall power, ENTity provides unparalleled portability and ease of use. ENTity can also be coupled to any standard video camera system or for better video imaging.

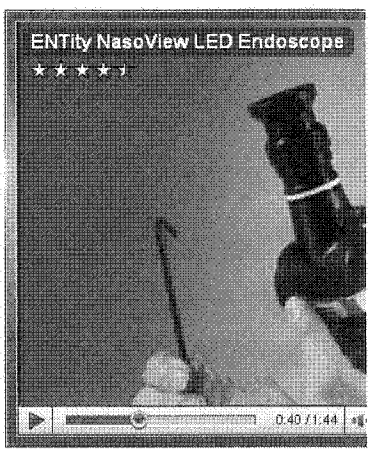

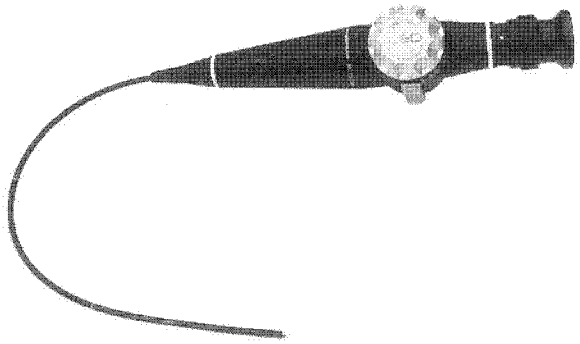

FEATURES & BENEFITS

- Less than 11 oz total weight
- High intensity LED light source (5500 Kelvin/natural sunlight quality) for exceptional visibility
- No bulb replacements and 3-year warranty on lighting
- Eliminates need for separate external light sources and cables
- Sleek, hybrid handle consisting of aluminum and molded plastic. Fully sealed and completely immersible.
- Variable light intensity
- Lithium Ion rechargeable battery
- "B" style eyepiece that can use standard camera coupler
- Polyurethane covered insertion shaft
- May be used left or right handed, thumb or finger actuated

SPECIFICATIONS

Flexible Length	30cm (11.8")
Overall Length	53cm (20.9")
Shaft Diameter	3.6mm
Articulation Range	135 degrees up / 135 degress down
Objective Lens	Fixed Focus
Depth of Field	5-50mm
Focus Range	+4 to -8 Diopters
Magnification Power	30X
Field of View	70 degrees

For ENTity NasoView sales, scope pricing, system specifications and accessories, contact OPTIM at 800-225-7486 or 508-347-5100 or sales@optimnet.com

Contact US At: 800.225.7486 / International: 1.508.347.5100 / Fax: 1.508.347.2380

©Optim Incorporated All Rights Reserved Sitemap Terms & Usage info@optimnet.com

Questions? Contact FDA/CDRH/OCE/DID at CDRH-FOISTATUS@fda.hhs.gov or 301-796-8118

Records processed under FOIA Request 2011-7650; Released 1/25/12

Questions? Contact FDA/CDRH/OCE/DID at CDRH-FOISTATUS@fda.hhs.gov or 301-796-8118

Records processed under FOIA Request 2011-7650; Released 1/25/12

DEPARTMENT OF HEALTH & HUMAN SERVICES

Public Health Service

Food and Drug Administration
9200 Corporate Boulevard
Rockville MD 20850

NOV 21 2000

Mr. Precious J. Resch
Pollux Endoscopy, Inc.
2404 Airport Rd., Suite 2
Plant City, FL 33567

Re: K002214
Trade Name: Sinuscope and Accessories
Regulatory Class: II
Product Code: EOB
Dated: October 11, 2000
Received: October 17, 2000

Dear Mr. Resch:

We have reviewed your Section 510(k) notification of intent to market the device referenced above and we have determined the device is substantially equivalent (for the indications for use stated in the enclosure) to devices marketed in interstate commerce prior to May 28, 1976, the enactment date of the Medical Device Amendments, or to devices that have been reclassified in accordance with the provisions of the Federal Food, Drug, and Cosmetic Act (Act). You may, therefore, market the device, subject to the general controls provisions of the Act. The general controls provisions of the Act include requirements for annual registration, listing of devices, good manufacturing practice, labeling, and prohibitions against misbranding and adulteration.

If your device is classified (see above) into either class II (Special Controls) or class III (Premarket Approval), it may be subject to such additional controls. Existing major regulations affecting your device can be found in the Code of Federal Regulations, Title 21, Parts 800 to 895. A substantially equivalent determination assumes compliance with the Current Good Manufacturing Practice requirements, as set forth in the Quality System Regulation (QS) for Medical Devices: General regulation (21 CFR Part 820) and that, through periodic QS inspections, the Food and Drug Administration (FDA) will verify such assumptions. Failure to comply with the GMP regulation may result in regulatory action. In addition, FDA may publish further announcements concerning your device in the Federal Register. Please note: this response to your premarket notification submission does not affect any obligation you might have under sections 531 through 542 of the Act for devices under the Electronic Product Radiation Control provisions, or other Federal laws or regulations.

Questions? Contact FDA/CDRH/OCE/DID at CDRH-FOISTATUS@fda.hhs.gov or 301-796-8118

Records processed under FOIA Request 2011-7650; Released 1/25/12

This letter will allow you to begin marketing your device as described in your 510(k) premarket notification. The FDA finding of substantial equivalence of your device to a legally marketed predicate device results in a classification for your device and thus, permits your device to proceed to the market.

If you desire specific advice for your device on our labeling regulation (21 CFR Part 801 and additionally 809.10 for in vitro diagnostic devices), please contact the Office of Compliance at (301) 594-6413. Additionally, for questions on the promotion and advertising of your device, please contact the Office of Compliance at (301) 594-4639. Also, please note the regulation entitled, "Misbranding by reference to premarket notification" (21CFR 807.97). Other general information on your responsibilities under the Act may be obtained from the Division of Small Manufacturers Assistance at its toll-free number (800) 638-2041 or (301) 443-6597 or at its internet address "http://www.fda.gov/cdrh/dsma/dsmamain.html".

Sincerely yours,

A. Ralph Rosenthal

A. Ralph Rosenthal, M.D.
Director
Division of Ophthalmic and Ear,
Nose and Throat Devices
Office of Device Evaluation
Center for Devices and
Radiological Health

Questions? Contact FDA/CDRH/OCE/DID at CDRH-FOISTATUS@fda.hhs.gov or 301-796-8118

Records processed under FOIA Request 2011-7650; Released 1/25/12

Statement of Indications for Use

Applicant: Pollux Endoscopy, Inc.

510(k) Number: K002214
Device Name: Sinuscope and Accessories

Indications for Use:

The Blazejewski Medi-Tech of Germany, sinuscope is intended to provide the physician with a means for endoscopic, diagnostic and therapeutic sinus surgical procedures.

The Sinuscope and accessories are indicated for use to examine and treat the nasal cavity and ~~nasal~~ naso pharynx by providing illumination and visualization of these regions.

The Sinuscope accessories will include sheaths to establish portals for visualization and surgical access and the suction/irrigation handle to remove debris and body fluids from the surgical site and to provide irrigation of the site with sterile solution of saline water.

Prescription Use ✓
(Per 21 CFR 801.109)

(Division Sign-Off)
Division of Ophthalmic Devices
510(k) Number K002214

Enclosure 6

Questions? Contact FDA/CDRH/OCE/DID at CDRH-FOISTATUS@fda.hhs.gov or 301-796-8118

Records processed under FOIA Request 2011-7650; Released 1/25/12

NOV 21 2000 K002214/S1

510(k) Summary

Submitter's Information: **Date: 11/15/00**

Name: Pollux Endoscopy, Inc.
Contact: Precious J. Resch
Address: 2404 Airport Road, Suite #2
Plant City, FL 33567
Tel: (813) 719-7397
Fax: (813) 754-4843

Device Name:

Proprietary Name: Sinuscope
Common Name: Sinuscope
Classification Name: Sinuscope
eoB

Predicate Device Identification:

Corporation: Precision Optics Corporation
Predicate device: Sinuscope K983123

Substantial Equivalence

Pollux Endoscopy's Sinuscope is substantially equivalent to cited predicate device. The device is identical in external materials, construction, and fundamental operational procedures.

Intended Use: The sinuscope is intended to provide the physician with a means of endoscopic, diagnostic and therapeutic sinus surgical procedures.

Description: A rigid endoscope that is composed of medical grade stainless steel with an overrall length of 230mm. It has an internal optical system for conveying an image to the user's eye. The technological characteristics of the device is identical to the predicate device K983123.

Questions? Contact FDA/CDRH/OCE/DID at CDRH-FOISTATUS@fda.hhs.gov or 301-796-8118

Records processed under FOIA Request 2011-7650; Released 1/25/12

Substantial Equivalence Comparison

Predicate Device: Sinuscope K983123

Table 2. Comparison of Materials

	Sinuscope (Predicate Device)	Sinuscope (Pollux Endo)
Tubing	Stainless Steel Electro-polished	Stainless Steel Electro-polished
Fiber bundles	Hoya Schott	Hoya Schott
Body	Stainless Steel Electro-polished	Stainless Steel Electro-polished
Eyepiece	Delrin	P.E.E.K.
Light post	Stainless Steel Electro-polished	Stainless Steel Electro-polished

Table 3. Comparison of Optical Performance

	Sinuscope (Predicate Device)	Sinuscope (Pollux Endo)
Field of View	95°	95°
Direction of Center of Field of view	0°	0°/ 30°/ 45°/ 70°
Depth of Field	5mm-40mm	5mm-40mm
Resolution	7.13 line pairs mm	7.13 line pairs mm

Questions? Contact FDA/CDRH/OCE/DID at CDRH-FOISTATUS@fda.hhs.gov or 301-796-8118

Records processed under FOIA Request 2011-7650; Released 1/25/12

Table 4. Comparison of Dimensions

Sinuscope (Predicate Device)	**Sinuscope** (Pollux Endo)
Overall Length	
230mm	230mm
Diameter of Objective Lens	
2.78mm	1.8mm/2.78mm
Diameter of Eyepiece	
31.75mm	31.75mm
Maximum Diameter of Shaft	
4mm	2.7mm / 4mm

Questions? Contact FDA/CDRH/OCE/DID at CDRH-FOISTATUS@fda.hhs.gov or 301-796-8118

Records processed under FOIA Request 2011-7650; Released 1/25/12

APPENDIX F: STERILIZATION VALIDATION

FOI - Page 101 of 1276
Questions? Contact FDA/CDRH/OCE/DID at CDRH-FOISTATUS@fda.hhs.gov or 301-796-8118

(b)(4),Testing Data

Records processed under FOIA Request 2011-7650; Released 1/25/12

Questions? Contact FDA/CDRH/OCE/DID at CDRH-FOISTATUS@fda.hhs.gov or 301-796-8118

(b)(4),Testing Data

Records processed under FOIA Request 2011-7650; Released 1/25/12

Questions? Contact FDA/CDRH/OCE/DID at CDRH-FOISTATUS@fda.hhs.gov or 301-796-8118

(b)(4),Testing Data

Records processed under FOIA Request 2011-7650; Released 1/25/12

Questions? Contact FDA/CDRH/OCE/DID at CDRH-FOISTATUS@fda.hhs.gov or 301-796-8118

(b)(4),Testing Data

Records processed under FOIA Request 2011-7650; Released 1/25/12

Questions? Contact FDA/CDRH/OCE/DID at CDRH-FOISTATUS@fda.hhs.gov or 301-796-8118

(b)(4),Testing Data

Records processed under FOIA Request 2011-7650; Released 1/25/12

Questions? Contact FDA/CDRH/OCE/DID at CDRH-FOISTATUS@fda.hhs.gov or 301-796-8118

(b)(4),Testing Data

Records processed under FOIA Request 2011-7650; Released 1/25/12

Questions? Contact FDA/CDRH/OCE/DID at CDRH-FOISTATUS@fda.hhs.gov or 301-796-8118

(b)(4),Testing Data

Records processed under FOIA Request 2011-7650; Released 1/25/12

Questions? Contact FDA/CDRH/OCE/DID at CDRH-FOISTATUS@fda.hhs.gov or 301-796-8118

(b)(4),Testing Data

Records processed under FOIA Request 2011-7650; Released 1/25/12

Questions? Contact FDA/CDRH/OCE/DID at CDRH-FOISTATUS@fda.hhs.gov or 301-796-8118

(b)(4),Testing Data

Records processed under FOIA Request 2011-7650; Released 1/25/12

Questions? Contact FDA/CDRH/OCE/DID at CDRH-FOISTATUS@fda.hhs.gov or 301-796-8118

Records processed under FOIA Request 2011-7650; Released 1/25/12

APPENDIX G: CLEANING VALIDATION

Questions? Contact FDA/CDRH/OCE/DID at CDRH-FOISTATUS@fda.hhs.gov or 301-796-8118

(b)(4),Testing Data

Records processed under FOIA Request 2011-7650; Released 1/25/12

Questions? Contact FDA/CDRH/OCE/DID at CDRH-FOISTATUS@fda.hhs.gov or 301-796-8118

(b)(4),Testing Data

Records processed under FOIA Request 2011-7650; Released 1/25/12

Questions? Contact FDA/CDRH/OCE/DID at CDRH-FOISTATUS@fda.hhs.gov or 301-796-8118

(b)(4),Testing Data

Records processed under FOIA Request 2011-7650; Released 1/25/12

Questions? Contact FDA/CDRH/OCE/DID at CDRH-FOISTATUS@fda.hhs.gov or 301-796-8118

(b)(4),Testing Data

Records processed under FOIA Request 2011-7650; Released 1/25/12

Questions? Contact FDA/CDRH/OCE/DID at CDRH-FOISTATUS@fda.hhs.gov or 301-796-8118

(b)(4),Testing Data

Records processed under FOIA Request 2011-7650; Released 1/25/12

Questions? Contact FDA/CDRH/OCE/DID at CDRH-FOISTATUS@fda.hhs.gov or 301-796-8118

(b)(4),Testing Data

Records processed under FOIA Request 2011-7650; Released 1/25/12

Questions? Contact FDA/CDRH/OCE/DID at CDRH-FOISTATUS@fda.hhs.gov or 301-796-8118

(b)(4),Testing Data

Records processed under FOIA Request 2011-7650; Released 1/25/12

Questions? Contact FDA/CDRH/OCE/DID at CDRH-FOISTATUS@fda.hhs.gov or 301-796-8118

Records processed under FOIA Request 2011-7650; Released 1/25/12

Questions? Contact FDA/CDRH/OCE/DID at CDRH-FOISTATUS@fda.hhs.gov or 301-796-8118

(b)(4),Testing Data

Records processed under FOIA Request 2011-7650; Released 1/25/12

Questions? Contact FDA/CDRH/OCE/DID at CDRH-FOISTATUS@fda.hhs.gov or 301-796-8118

(b)(4),Testing Data

Records processed under FOIA Request 2011-7650; Released 1/25/12

Questions? Contact FDA/CDRH/OCE/DID at CDRH-FOISTATUS@fda.hhs.gov or 301-796-8118

(b)(4),Testing Data

Records processed under FOIA Request 2011-7650; Released 1/25/12

Questions? Contact FDA/CDRH/OCE/DID at CDRH-FOISTATUS@fda.hhs.gov or 301-796-8118

(b)(4),Testing Data

Records processed under FOIA Request 2011-7650; Released 1/25/12

Questions? Contact FDA/CDRH/OCE/DID at CDRH-FOISTATUS@fda.hhs.gov or 301-796-8118

(b)(4),Testing Data

Records processed under FOIA Request 2011-7650; Released 1/25/12

Questions? Contact FDA/CDRH/OCE/DID at CDRH-FOISTATUS@fda.hhs.gov or 301-796-8118

(b)(4),Testing Data

Records processed under FOIA Request 2011-7650; Released 1/25/12

Questions? Contact FDA/CDRH/OCE/DID at CDRH-FOISTATUS@fda.hhs.gov or 301-796-8118

(b)(4),Testing Data

Records processed under FOIA Request 2011-7650; Released 1/25/12

Questions? Contact FDA/CDRH/OCE/DID at CDRH-FOISTATUS@fda.hhs.gov or 301-796-8118

(b)(4),Testing Data

Records processed under FOIA Request 2011-7650; Released 1/25/12

Questions? Contact FDA/CDRH/OCE/DID at CDRH-FOISTATUS@fda.hhs.gov or 301-796-8118

(b)(4),Testing Data

Records processed under FOIA Request 2011-7650; Released 1/25/12

Questions? Contact FDA/CDRH/OCE/DID at CDRH-FOISTATUS@fda.hhs.gov or 301-796-8118

(b)(4),Testing Data

Records processed under FOIA Request 2011-7650; Released 1/25/12

Questions? Contact FDA/CDRH/OCE/DID at CDRH-FOISTATUS@fda.hhs.gov or 301-796-8118

(b)(4),Testing Data

Records processed under FOIA Request 2011-7650; Released 1/25/12

Questions? Contact FDA/CDRH/OCE/DID at CDRH-FOISTATUS@fda.hhs.gov or 301-796-8118

(b)(4),Testing Data

Records processed under FOIA Request 2011-7650; Released 1/25/12

Questions? Contact FDA/CDRH/OCE/DID at CDRH-FOISTATUS@fda.hhs.gov or 301-796-8118

(b)(4),Testing Data

Records processed under FOIA Request 2011-7650; Released 1/25/12

Questions? Contact FDA/CDRH/OCE/DID at CDRH-FOISTATUS@fda.hhs.gov or 301-796-8118

(b)(4),Testing Data

Records processed under FOIA Request 2011-7650; Released 1/25/12

Questions? Contact FDA/CDRH/OCE/DID at CDRH-FOISTATUS@fda.hhs.gov or 301-796-8118

(b)(4),Testing Data

Records processed under FOIA Request 2011-7650; Released 1/25/12

Questions? Contact FDA/CDRH/OCE/DID at CDRH-FOISTATUS@fda.hhs.gov or 301-796-8118

(b)(4),Testing Data

Records processed under FOIA Request 2011-7650; Released 1/25/12

Questions? Contact FDA/CDRH/OCE/DID at CDRH-FOISTATUS@fda.hhs.gov or 301-796-8118

(b)(4),Testing Data

Records processed under FOIA Request 2011-7650; Released 1/25/12

Questions? Contact FDA/CDRH/OCE/DID at CDRH-FOISTATUS@fda.hhs.gov or 301-796-8118

(b)(4),Testing Data

Records processed under FOIA Request 2011-7650; Released 1/25/12

Questions? Contact FDA/CDRH/OCE/DID at CDRH-FOISTATUS@fda.hhs.gov or 301-796-8118

(b)(4),Testing Data

Records processed under FOIA Request 2011-7650; Released 1/25/12

Questions? Contact FDA/CDRH/OCE/DID at CDRH-FOISTATUS@fda.hhs.gov or 301-796-8118

(b)(4),Testing Data

Records processed under FOIA Request 2011-7650; Released 1/25/12

Questions? Contact FDA/CDRH/OCE/DID at CDRH-FOISTATUS@fda.hhs.gov or 301-796-8118

(b)(4),Testing Data

Records processed under FOIA Request 2011-7650; Released 1/25/12

Questions? Contact FDA/CDRH/OCE/DID at CDRH-FOISTATUS@fda.hhs.gov or 301-796-8118

(b)(4),Testing Data

Records processed under FOIA Request 2011-7650; Released 1/25/12

Questions? Contact FDA/CDRH/OCE/DID at CDRH-FOISTATUS@fda.hhs.gov or 301-796-8118

(b)(4),Testing Data

Records processed under FOIA Request 2011-7650; Released 1/25/12

Questions? Contact FDA/CDRH/OCE/DID at CDRH-FOISTATUS@fda.hhs.gov or 301-796-8118

(b)(4),Testing Data

Records processed under FOIA Request 2011-7650; Released 1/25/12

Questions? Contact FDA/CDRH/OCE/DID at CDRH-FOISTATUS@fda.hhs.gov or 301-796-8118

(b)(4),Testing Data

Records processed under FOIA Request 2011-7650; Released 1/25/12

Questions? Contact FDA/CDRH/OCE/DID at CDRH-FOISTATUS@fda.hhs.gov or 301-796-8118

(b)(4),Testing Data

Records processed under FOIA Request 2011-7650; Released 1/25/12

Questions? Contact FDA/CDRH/OCE/DID at CDRH-FOISTATUS@fda.hhs.gov or 301-796-8118

(b)(4),Testing Data

Records processed under FOIA Request 2011-7650; Released 1/25/12

Questions? Contact FDA/CDRH/OCE/DID at CDRH-FOISTATUS@fda.hhs.gov or 301-796-8118

(b)(4),Testing Data

Records processed under FOIA Request 2011-7650; Released 1/25/12

Questions? Contact FDA/CDRH/OCE/DID at CDRH-FOISTATUS@fda.hhs.gov or 301-796-8118

(b)(4),Testing Data

Records processed under FOIA Request 2011-7650; Released 1/25/12

Questions? Contact FDA/CDRH/OCE/DID at CDRH-FOISTATUS@fda.hhs.gov or 301-796-8118

(b)(4),Testing Data

Records processed under FOIA Request 2011-7650; Released 1/25/12

Questions? Contact FDA/CDRH/OCE/DID at CDRH-FOISTATUS@fda.hhs.gov or 301-796-8118

Records processed under FOIA Request 2011-7650; Released 1/25/12

Food and Drug Administration
Office of Device Evaluation &
Office of In Vitro Diagnostics

COVER SHEET MEMORANDUM

From: Reviewer Name Susan Rudy, MSN, CRNP, CORLN

Subject: 510(k) Number K100577

To: The Record

Please list CTS decision code: SE

☐ Refused to accept (Note: this is considered the first review cycle, See Screening Checklist http://eroom.fda.gov/eRoomReq/Files/CDRH3/CDRHPremarketNotification510kProgram/0_5631/Screening%20Checklist%207%202%2007.doc)

☐ Hold (Additional Information or Telephone Hold).

√ Final Decision (SE, SE with Limitations, NSE, Withdrawn, etc.).

Please complete the following for a final clearance decision (i.e., SE, SE with Limitations, etc.):		YES	NO
Indications for Use Page	*Attach IFU*	√	
510(k) Summary /510(k) Statement	*Attach Summary*	√	
Truthful and Accurate Statement.	*Must be present for a Final Decision*	√	
Is the device Class III? If yes, does firm include Class III Summary?	*Must be present for a Final Decision*		√
Does firm reference standards? (If yes, please attach form from http://www.fda.gov/opacom/morechoices/fdaforms/FDA-3654.pdf)		√	
Is this a combination product? (Please specify category N, see http://eroom.fda.gov/eRoomReq/Files/CDRH3/CDRHPremarketNotification510kProgram/0_413b/COMBINATION%20PRODUCT%20ALGORITHM%20(REVISED%203-12-03).DOC			√
Is this a reprocessed single use device? (Guidance for Industry and FDA Staff – MDUFMA - Validation Data in 510(k)s for Reprocessed Single-Use Medical Devices, http://www.fda.gov/cdrh/ode/guidance/1216.html)			√
Is this device intended for pediatric use only?			√
Is this a prescription device? (If both prescription & OTC, check both boxes.)		√	
Did the application include a completed FORM FDA 3674, Certification with Requirements of ClinicalTrials.gov Data Bank?			√
Is clinical data necessary to support the review of this 510(k)? Did the application include a completed FORM FDA 3674, *Certification with Requirements of ClinicalTrials.gov Data Bank*? (If not, then applicant must be contacted to obtain completed form.)			√
Does this device include an Animal Tissue Source?			√
All Pediatric Patients age<=21			
Neonate/Newborn (Birth to 28 days)			
Infant (29 days -< 2 years old)			
Child (2 years -< 12 years old)		√	
Adolescent (12 years -< 18 years old)		√	
Transitional Adolescent A (18 - <21 years old) Special considerations are being given to this group, different from adults age ≥ 21 (different device design or testing, different protocol procedures, etc.)			√

4

Transitional Adolescent B (18 -<= 21; No special considerations compared to adults => 21 years old)		√	
Nanotechnology			√
Is this device subject to the Tracking Regulation? (Medical Device Tracking Guidance, http://www.fda.gov/cdrh/comp/guidance/169.html)	*Contact OC.*		√

Regulation Number	**Class***	**Product Code**
21 CFR 874.4680	II	EOB

(*If unclassified, see 510(k) Staff)

Additional Product Codes:

Review: ENT13 1/6/11
(Branch Chief) (Branch Code) (Date)

Final Review: 1/6/11
(Division Director) (Date)

5

Records processed under FOIA Request 2011-7650; Released 1/25/12

DEPARTMENT OF HEALTH AND HUMAN SERVICES **MEMORANDUM**

Food and Drug Administration
Office of Device Evaluation
9200 Corporate Boulevard
Rockville, MD 20850

Premarket Notification [510(k)] Review
Traditional/Abbreviated
K100577 / S003

Date: 1/5/2011
To: The Record
From: Susan Rudy, MSN, CRNP, CORLN

Office: ODE
Division: DONED / ENTB

510(k) Holder: Acclarent, Inc.
Device Name: Acclarent Cyclops Multi-angle Endoscope (Model TBD)
Contact: Keri Yen, Regulatory Affairs Manager
Phone: 650 687 5874
Fax: 680 687 4449
Email: KYen1@ITS.JNJ.com

I. Purpose

The 510(k) holder would like to introduce the Acclarent Cyclops Multi-angle Endoscope – Model TBD into interstate commerce.

II. Administrative Requirements

	Yes	No
Indications for Use page	√	
Truthful and Accuracy Statement	√	
510(k) Summary or 510(k) Statement	√	
Standards Form	S001	

III. Device Description

	Yes	No
Is the device life-supporting or life sustaining?		√
Is the device implanted (short-term or long-term)?		√
Does the device design use software?		√
Is the device sterile?		√

6

Records processed under FOIA Request 2011-7650; Released 1/25/12

Is the device reusable (not reprocessed single use)? Are "cleaning" instructions included for the end user?	√√	

Summary of Device Description

This is a 4mm diameter rigid unchanneled endoscope with a standard eyepiece and standard camera coupler. The distal tip is built with a 10 degree angulation. Glass fibers travel through the device shaft to carry light from the light source to the distal end of the device to provide illumination.

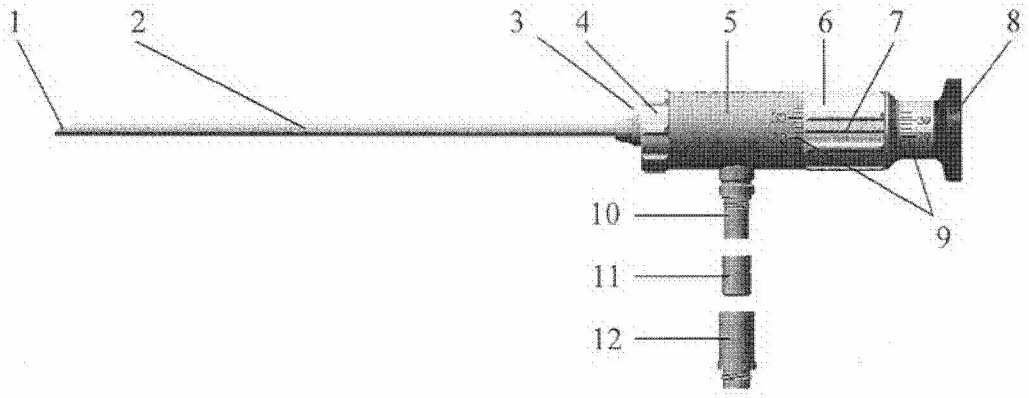

Legend:

1) Object lens
2) Shaft
3) Protection Tube Connector
4) Shaft Control
5) Scope Body
6) Angle Control
7) Angle Indicator Line
8) Eyepiece
9) Angle of View Scale
10) Light Guide Post - ACMI Light Cable Configuration (fixed)
11) Wolf Light Cable Adapter (detachable)
12) Olympus / Storz Light Cable Adapter (detachable)

Figure 1. Acclarent Cyclops Multi-Angle Endoscope

(b)(4)

FOI - Page 153 of 1276 Questions? Contact FDA/CDRH/OCE/DID at CDRH-FOISTATUS@fda.hhs.gov or 301-796-8118

7

(b)(4),(b)(5),Technical Information-CCI,Testing Data
Records processed under FOIA Request 2011-7650; Released 1/25/12

Questions? Contact FDA/CDRH/OCE/DID at CDRH-FOISTATUS@fda.hhs.gov or 301-796-8118

(b)(4),(b)(5),Technical Information-CCI,Testing Data
Records processed under FOIA Request 2011-7650; Released 1/25/12

Questions? Contact FDA/CDRH/OCE/DID at CDRH-FOISTATUS@fda.hhs.gov or 301-796-8118

(b)(4),(b)(5),Technical Information-CCI,Testing Data
Records processed under FOIA Request 2011-7650; Released 1/25/12

Questions? Contact FDA/CDRH/OCE/DID at CDRH-FOISTATUS@fda.hhs.gov or 301-796-8118

(b)(4),(b)(5),Technical Information-CCI,Testing Data
Records processed under FOIA Request 2011-7650; Released 1/25/12

Questions? Contact FDA/CDRH/OCE/DID at CDRH-FOISTATUS@fda.hhs.gov or 301-796-8118

(b)(4),(b)(5),Technical Information-CCI,Testing Data
Records processed under FOIA Request 2011-7650; Released 1/25/12

Questions? Contact FDA/CDRH/OCE/DID at CDRH-FOISTATUS@fda.hhs.gov or 301-796-8118

(b)(4),(b)(5),Technical Information-CCI,Testing Data
Records processed under FOIA Request 2011-7650; Released 1/25/12

Questions? Contact FDA/CDRH/OCE/DID at CDRH-FOISTATUS@fda.hhs.gov or 301-796-8118

(b)(4),(b)(5),Technical Information-CCI,Testing Data
Records processed under FOIA Request 2011-7650; Released 1/25/12

Questions? Contact FDA/CDRH/OCE/DID at CDRH-FOISTATUS@fda.hhs.gov or 301-796-8118

(b)(4),(b)(5),Technical Information-CCI,Testing Data
Records processed under FOIA Request 2011-7650; Released 1/25/12

Questions? Contact FDA/CDRH/OCE/DID at CDRH-FOISTATUS@fda.hhs.gov or 301-796-8118

(b)(4),(b)(5),Technical Information-CCI,Testing Data
Records processed under FOIA Request 2011-7650; Released 1/25/12

Questions? Contact FDA/CDRH/OCE/DID at CDRH-FOISTATUS@fda.hhs.gov or 301-796-8118

(b)(4),(b)(5),Technical Information-CCI,Testing Data
Records processed under FOIA Request 2011-7650; Released 1/25/12

Questions? Contact FDA/CDRH/OCE/DID at CDRH-FOISTATUS@fda.hhs.gov or 301-796-8118

(b)(4),(b)(5),Technical Information-CCI,Testing Data
Records processed under FOIA Request 2011-7650; Released 1/25/12

Questions? Contact FDA/CDRH/OCE/DID at CDRH-FOISTATUS@fda.hhs.gov or 301-796-8118

(b)(4),(b)(5),Technical Information-CCI,Testing Data
Records processed under FOIA Request 2011-7650; Released 1/25/12

Questions? Contact FDA/CDRH/OCE/DID at CDRH-FOISTATUS@fda.hhs.gov or 301-796-8118

(b)(4),(b)(5),Technical Information-CCI,Testing Data
Records processed under FOIA Request 2011-7650; Released 1/25/12

Questions? Contact FDA/CDRH/OCE/DID at CDRH-FOISTATUS@fda.hhs.gov or 301-796-8118

(b)(4),(b)(5),Technical Information-CCI,Testing Data
Records processed under FOIA Request 2011-7650; Released 1/25/12

Questions? Contact FDA/CDRH/OCE/DID at CDRH-FOISTATUS@fda.hhs.gov or 301-796-8118

(b)(4),(b)(5),Technical Information-CCI,Testing Data
Records processed under FOIA Request 2011-7650; Released 1/25/12

Questions? Contact FDA/CDRH/OCE/DID at CDRH-FOISTATUS@fda.hhs.gov or 301-796-8118

(b)(4),(b)(5),Technical Information-CCI,Testing Data
Records processed under FOIA Request 2011-7650; Released 1/25/12

Questions? Contact FDA/CDRH/OCE/DID at CDRH-FOISTATUS@fda.hhs.gov or 301-796-8118

(b)(4),(b)(5),Technical Information-CCI,Testing Data
Records processed under FOIA Request 2011-7650; Released 1/25/12

Questions? Contact FDA/CDRH/OCE/DID at CDRH-FOISTATUS@fda.hhs.gov or 301-796-8118

(b)(4),(b)(5),Technical Information-CCI,Testing Data
Records processed under FOIA Request 2011-7650; Released 1/25/12

Questions? Contact FDA/CDRH/OCE/DID at CDRH-FOISTATUS@fda.hhs.gov or 301-796-8118

(b)(4),(b)(5),Technical Information-CCI,Testing Data
Records processed under FOIA Request 2011-7650; Released 1/25/12

Questions? Contact FDA/CDRH/OCE/DID at CDRH-FOISTATUS@fda.hhs.gov or 301-796-8118

(b)(4),(b)(5),Technical Information-CCI,Testing Data
Records processed under FOIA Request 2011-7650; Released 1/25/12

Questions? Contact FDA/CDRH/OCE/DID at CDRH-FOISTATUS@fda.hhs.gov or 301-796-8118

(b)(4),(b)(5),Technical Information-CCI,Testing Data
Records processed under FOIA Request 2011-7650; Released 1/25/12

Questions? Contact FDA/CDRH/OCE/DID at CDRH-FOISTATUS@fda.hhs.gov or 301-796-8118

(b)(4),(b)(5),Technical Information-CCI,Testing Data
Records processed under FOIA Request 2011-7650; Released 1/25/12

Questions? Contact FDA/CDRH/OCE/DID at CDRH-FOISTATUS@fda.hhs.gov or 301-796-8118

(b)(4),(b)(5),Technical Information-CCI,Testing Data
Records processed under FOIA Request 2011-7650; Released 1/25/12

Questions? Contact FDA/CDRH/OCE/DID at CDRH-FOISTATUS@fda.hhs.gov or 301-796-8118

(b)(4),(b)(5),Technical Information-CCI,Testing Data
Records processed under FOIA Request 2011-7650; Released 1/25/12

Questions? Contact FDA/CDRH/OCE/DID at CDRH-FOISTATUS@fda.hhs.gov or 301-796-8118

(b)(4),(b)(5),Technical Information-CCI,Testing Data
Records processed under FOIA Request 2011-7650; Released 1/25/12

Questions? Contact FDA/CDRH/OCE/DID at CDRH-FOISTATUS@fda.hhs.gov or 301-796-8118

(b)(4),(b)(5),Technical Information-CCI,Testing Data
Records processed under FOIA Request 2011-7650; Released 1/25/12

Questions? Contact FDA/CDRH/OCE/DID at CDRH-FOISTATUS@fda.hhs.gov or 301-796-8118

(b)(4),(b)(5),Technical Information-CCI,Testing Data
Records processed under FOIA Request 2011-7650; Released 1/25/12

Questions? Contact FDA/CDRH/OCE/DID at CDRH-FOISTATUS@fda.hhs.gov or 301-796-8118

(b)(4),(b)(5),Technical Information-CCI,Testing Data
Records processed under FOIA Request 2011-7650; Released 1/25/12

Questions? Contact FDA/CDRH/OCE/DID at CDRH-FOISTATUS@fda.hhs.gov or 301-796-8118

(b)(4),(b)(5),Technical Information-CCI,Testing Data
Records processed under FOIA Request 2011-7650; Released 1/25/12

Questions? Contact FDA/CDRH/OCE/DID at CDRH-FOISTATUS@fda.hhs.gov or 301-796-8118

510(k) SUMMARY REQUIREMENTS CHECKLIST 21 CFR 807.92 for K100577 / S003				
	All 510(k) summaries shall contain the following information:	Y	N	N/A
1	The submitter's name, address, telephone number, a contact person, and the date the summary was prepared	√		
2	The name of the device, including the trade or proprietary name if applicable, the common or usual name, and the classification name	√		
3	An identification of the legally marketed device(s) to which the submitter claims equivalence.	√		
4	A description of the device that is the subject of the 510(k), including an explanation of how the device functions, the scientific concepts that form the basis for the device, and the significant physical and performance characteristics of the device (e.g., device design, material used, and physical properties)	√		
5	A statement of the indications for use of the device that is the subject of the 510(k), including a general description of the diseases or conditions that the device will diagnose, treat, prevent, cure, or mitigate, including a description, where appropriate, of the patient population for which the device is indicated. Or, if the indication statements are different from those of the legally marketed device(s) identified in paragraph (3) of this section, an explanation as to why the differences are not critical to the intended therapeutic, diagnostic, prosthetic, surgical or other use of the device, and why the differences do not affect the safety and effectiveness of the device when used as indicated.	√		
6	If the device has the same technological characteristics (i.e., design, material, chemical composition, energy source, etc.) as the predicate device(s) identified in paragraph(3) of this section, a summary of the technological characteristics of the new device in comparison to those of the predicate device(s). Or, if the device has different technological characteristics from the predicate device(s), a summary of how the technological characteristics of the device compare to a legally marketed device(s) identified in paragraph (3) of this section.	√		
510(k) summaries for those 510(k)s in which a determination of substantial equivalence is also based on an assessment of performance data shall contain the following information				
7	A brief discussion of the nonclinical tests submitted, referenced, or relied on in the 510(k) for a determination of substantial equivalence	√		
8	A summary discussion of the clinical tests submitted, referenced, or relied on in the 510(k) for a determination of substantial equivalence. This discussion shall include, where applicable, a description of the subjects upon whom the device was tested, a discussion of the safety or effectiveness data obtained from the testing, with specific reference to adverse effects and complications, and any other information from the clinical testing relevant to a determination of substantial equivalence. (There can not be any patient identifier information in the summary.)			√
9	The conclusions drawn from the nonclinical and clinical tests that demonstrate that the device is as safe, as effective, and performs at least as safely and effectively as the legally marketed device identified in paragraph(3) of this section.	√		

The following deficiency was communicated to K. Yen, Acclarent from S. Rudy, FDA by e-mail on 1/4/2011

(b)(4),(b)(5)

Records processed under FOIA Request 2011-7650; Released 1/25/12

(b)(4),(b)(5)

Susan ("Sue") Rudy, MSN, CRNP, CORLN, OCN
Nurse Consultant & Family Nurse Practitioner
FDA/CDRH/ODE/DONED/ENTB

Questions? Contact FDA/CDRH/OCE/DID at CDRH-FOISTATUS@fda.hhs.gov or 301-796-8118

(b)(4),(b)(5)

Records processed under FOIA Request 2011-7650; Released 1/25/12

Questions? Contact FDA/CDRH/OCE/DID at CDRH-FOISTATUS@fda.hhs.gov or 301-796-8118

(b)(4),(b)(5)

Records processed under FOIA Request 2011-7650; Released 1/25/12

Questions? Contact FDA/CDRH/OCE/DID at CDRH-FOISTATUS@fda.hhs.gov or 301-796-8118

(b)(4),(b)(5)

Records processed under FOIA Request 2011-7650; Released 1/25/12

Questions? Contact FDA/CDRH/OCE/DID at CDRH-FOISTATUS@fda.hhs.gov or 301-796-8118

(b)(4),(b)(5)

Records processed under FOIA Request 2011-7650; Released 1/25/12

Questions? Contact FDA/CDRH/OCE/DID at CDRH-FOISTATUS@fda.hhs.gov or 301-796-8118

(b)(4),(b)(5)

Records processed under FOIA Request 2011-7650; Released 1/25/12

Questions? Contact FDA/CDRH/OCE/DID at CDRH-FOISTATUS@fda.hhs.gov or 301-796-8118

(b)(4),(b)(5)

Records processed under FOIA Request 2011-7650; Released 1/25/12

Questions? Contact FDA/CDRH/OCE/DID at CDRH-FOISTATUS@fda.hhs.gov or 301-796-8118

(b)(4),(b)(5)

Records processed under FOIA Request 2011-7650; Released 1/25/12

Questions? Contact FDA/CDRH/OCE/DID at CDRH-FOISTATUS@fda.hhs.gov or 301-796-8118

(b)(4),(b)(5)

Records processed under FOIA Request 2011-7650; Released 1/25/12

Questions? Contact FDA/CDRH/OCE/DID at CDRH-FOISTATUS@fda.hhs.gov or 301-796-8118

(b)(4),(b)(5)

Records processed under FOIA Request 2011-7650; Released 1/25/12

Questions? Contact FDA/CDRH/OCE/DID at CDRH-FOISTATUS@fda.hhs.gov or 301-796-8118

(b)(4),(b)(5)

Records processed under FOIA Request 2011-7650; Released 1/25/12

Questions? Contact FDA/CDRH/OCE/DID at CDRH-FOISTATUS@fda.hhs.gov or 301-796-8118

(b)(4),(b)(5)

Records processed under FOIA Request 2011-7650; Released 1/25/12

Questions? Contact FDA/CDRH/OCE/DID at CDRH-FOISTATUS@fda.hhs.gov or 301-796-8118

(b)(4),(b)(5)

Records processed under FOIA Request 2011-7650; Released 1/25/12

Questions? Contact FDA/CDRH/OCE/DID at CDRH-FOISTATUS@fda.hhs.gov or 301-796-8118

(b)(4),(b)(5)

Records processed under FOIA Request 2011-7650; Released 1/25/12

Questions? Contact FDA/CDRH/OCE/DID at CDRH-FOISTATUS@fda.hhs.gov or 301-796-8118

(b)(4),(b)(5)

Records processed under FOIA Request 2011-7650; Released 1/25/12

Questions? Contact FDA/CDRH/OCE/DID at CDRH-FOISTATUS@fda.hhs.gov or 301-796-8118

DEPARTMENT OF HEALTH & HUMAN SERVICES

Food and Drug Administration
ODE / DONED / ENTB
WO66 Rm 2574
10903 New Hampshire Avenue
Silver Spring, MD 20993-0002

TO: **The Record**

FROM: Susan Rudy, MSN, CRNP, CORLN S. Rudy CRNP 1/4/2011
Nurse Consultant and Family Nurse Practitioner, ENTB

DATE: 1/4/2011

RE: **K100577 / S003 Acclarent Cyclops MultiAngle Endoscope**
Clinical Review – Traditional 510(k)

RECOMMENDATION: SE

(b)(4),(b)(5)

Questions? Contact FDA/CDRH/OCE/DID at CDRH-FOISTATUS@fda.hhs.gov or 301-796-8118

(b)(4),(b)(5)

Records processed under FOIA Request 2011-7650; Released 1/25/12

Questions? Contact FDA/CDRH/OCE/DID at CDRH-FOISTATUS@fda.hhs.gov or 301-796-8118

(b)(4),(b)(5)

Records processed under FOIA Request 2011-7650; Released 1/25/12

Questions? Contact FDA/CDRH/OCE/DID at CDRH-FOISTATUS@fda.hhs.gov or 301-796-8118

(b)(4),(b)(5)

Records processed under FOIA Request 2011-7650; Released 1/25/12

Questions? Contact FDA/CDRH/OCE/DID at CDRH-FOISTATUS@fda.hhs.gov or 301-796-8118

(b)(4),(b)(5)

Records processed under FOIA Request 2011-7650; Released 1/25/12

Questions? Contact FDA/CDRH/OCE/DID at CDRH-FOISTATUS@fda.hhs.gov or 301-796-8118

(b)(4),(b)(5)

Records processed under FOIA Request 2011-7650; Released 1/25/12

Questions? Contact FDA/CDRH/OCE/DID at CDRH-FOISTATUS@fda.hhs.gov or 301-796-8118

(b)(4),(b)(5)

Records processed under FOIA Request 2011-7650; Released 1/25/12

Questions? Contact FDA/CDRH/OCE/DID at CDRH-FOISTATUS@fda.hhs.gov or 301-796-8118

Rudy, Susan

From: Heydrick, David S.
Sent: Tuesday, January 04, 2011 10:08 AM
To: Rudy, Susan; Clupper, Daniel C
Cc: Nandkumar, Srinivas
Subject: RE: Brain stimulators?

(b)(4),(b)(5)

Dave

From: Rudy, Susan
Sent: Tuesday, January 04, 2011 9:03 AM
To: Heydrick, David S.; Clupper, Daniel C
Cc: Nandkumar, Srinivas
Subject: Brain stimulators?

Mornin-

(b)(4),(b)(5)

Susan F. Rudy, MSN, CRNP, CORLN, OCN
Nurse Consultant and Family Nurse Practitioner
FDA/CDRH/ODE/DONED
Ear, Nose & Throat Devices Branch
WO66 Rm 2574
10903 New Hampshire Ave.
Silver Spring, MD 20993
T: 301 796 6472
F: 301 827 4601
E: Susan.Rudy@fda.hhs.gov

Questions? Contact FDA/CDRH/OCE/DID at CDRH-FOISTATUS@fda.hhs.gov or 301-796-8118

Records processed under FOIA Request 2011-7650; Released 1/25/12

CENTER FOR DEVICES AND RADIOLOGICAL HEALTH
510(k) ENGINEERING REVIEW MEMO

From: John Doucet, Ph.D.
ENTB/DONED/ODE

To: Susan Rudy, MSN, CRNP, CORLN
ENTB/DONED/ODE

Subject: **K100577/S003 – Cyclops Multi-Angle Endoscope**
Acclarent

Date: January 3, 2011

1/3/2011

Overview:

(b)(4),(b)(5)

Questions? Contact FDA/CDRH/OCE/DID at CDRH-FOISTATUS@fda.hhs.gov or 301-796-8118

02

(b)(4)

Records processed under FOIA Request 2011-7650; Released 1/25/12

Questions? Contact FDA/CDRH/OCE/DID at CDRH-FOISTATUS@fda.hhs.gov or 301-796-8118

Records processed under FOIA Request 2011-7650; Released 1/25/12

DEPARTMENT OF HEALTH & HUMAN SERVICES

Food and Drug Administration
ODE / DONED / ENTB
WO66 Rm 2574
10903 New Hampshire Avenue
Silver Spring, MD 20993-0002

TO: **The Record**

FROM: Susan Rudy, MSN, CRNP, CORLN S. Rudy CRNP 1/3/2011
Nurse Consultant and Family Nurse Practitioner, ENTB

DATE: 1/3/2011

RE: **K100577 / S003 Acclarent Cyclops Multiangle Endoscope**
Sterility review – Traditional 510(k)

RECOMMENDATION: SE

(b)(4),(b)(5)

Questions? Contact FDA/CDRH/OCE/DID at CDRH-FOISTATUS@fda.hhs.gov or 301-796-8118

(b)(4),(b)(5)

Records processed under FOIA Request 2011-7650; Released 1/25/12

Questions? Contact FDA/CDRH/OCE/DID at CDRH-FOISTATUS@fda.hhs.gov or 301-796-8118

(b)(4),(b)(5)

Records processed under FOIA Request 2011-7650; Released 1/25/12

Questions? Contact FDA/CDRH/OCE/DID at CDRH-FOISTATUS@fda.hhs.gov or 301-796-8118

(b)(4),(b)(5)

Records processed under FOIA Request 2011-7650; Released 1/25/12

Questions? Contact FDA/CDRH/OCE/DID at CDRH-FOISTATUS@fda.hhs.gov or 301-796-8118

(b)(4),(b)(5)

Records processed under FOIA Request 2011-7650; Released 1/25/12

Questions? Contact FDA/CDRH/OCE/DID at CDRH-FOISTATUS@fda.hhs.gov or 301-796-8118

(b)(4),(b)(5)

Records processed under FOIA Request 2011-7650; Released 1/25/12

Questions? Contact FDA/CDRH/OCE/DID at CDRH-FOISTATUS@fda.hhs.gov or 301-796-8118

(b)(4),(b)(5)

Records processed under FOIA Request 2011-7650; Released 1/25/12

Questions? Contact FDA/CDRH/OCE/DID at CDRH-FOISTATUS@fda.hhs.gov or 301-796-8118

(b)(4),(b)(5)

Records processed under FOIA Request 2011-7650; Released 1/25/12

Questions? Contact FDA/CDRH/OCE/DID at CDRH-FOISTATUS@fda.hhs.gov or 301-796-8118

(b)(4),(b)(5)

Records processed under FOIA Request 2011-7650; Released 1/25/12

Questions? Contact FDA/CDRH/OCE/DID at CDRH-FOISTATUS@fda.hhs.gov or 301-796-8118

(b)(4),(b)(5)

Records processed under FOIA Request 2011-7650; Released 1/25/12

Questions? Contact FDA/CDRH/OCE/DID at CDRH-FOISTATUS@fda.hhs.gov or 301-796-8118

(b)(4),(b)(5)

Records processed under FOIA Request 2011-7650; Released 1/25/12

Questions? Contact FDA/CDRH/OCE/DID at CDRH-FOISTATUS@fda.hhs.gov or 301-796-8118

(b)(4),(b)(5)

Records processed under FOIA Request 2011-7650; Released 1/25/12

Questions? Contact FDA/CDRH/OCE/DID at CDRH-FOISTATUS@fda.hhs.gov or 301-796-8118

(b)(4),(b)(5)

Records processed under FOIA Request 2011-7650; Released 1/25/12

Questions? Contact FDA/CDRH/OCE/DID at CDRH-FOISTATUS@fda.hhs.gov or 301-796-8118

(b)(4),(b)(5)

Records processed under FOIA Request 2011-7650; Released 1/25/12

Questions? Contact FDA/CDRH/OCE/DID at CDRH-FOISTATUS@fda.hhs.gov or 301-796-8118

(b)(4),(b)(5)

Records processed under FOIA Request 2011-7650; Released 1/25/12

Questions? Contact FDA/CDRH/OCE/DID at CDRH-FOISTATUS@fda.hhs.gov or 301-796-8118

(b)(4),(b)(5)

Records processed under FOIA Request 2011-7650; Released 1/25/12

Questions? Contact FDA/CDRH/OCE/DID at CDRH-FOISTATUS@fda.hhs.gov or 301-796-8118

(b)(4),(b)(5)

Records processed under FOIA Request 2011-7650; Released 1/25/12

Questions? Contact FDA/CDRH/OCE/DID at CDRH-FOISTATUS@fda.hhs.gov or 301-796-8118

(b)(4),(b)(5)

Records processed under FOIA Request 2011-7650; Released 1/25/12

Questions? Contact FDA/CDRH/OCE/DID at CDRH-FOISTATUS@fda.hhs.gov or 301-796-8118

(b)(4),(b)(5)

Records processed under FOIA Request 2011-7650; Released 1/25/12

Questions? Contact FDA/CDRH/OCE/DID at CDRH-FOISTATUS@fda.hhs.gov or 301-796-8118

(b)(4),(b)(5)

Records processed under FOIA Request 2011-7650; Released 1/25/12

Questions? Contact FDA/CDRH/OCE/DID at CDRH-FOISTATUS@fda.hhs.gov or 301-796-8118

Records processed under FOIA Request 2011-7650; Released 1/25/12

K100577/S003 – Materials Science & Engineering Review

(b)(4),(b)(5)

Questions? Contact FDA/CDRH/OCE/DID at CDRH-FOISTATUS@fda.hhs.gov or 301-796-8118

(b)(4),(b)(5)

Records processed under FOIA Request 2011-7650; Released 1/25/12

Questions? Contact FDA/CDRH/OCE/DID at CDRH-FOISTATUS@fda.hhs.gov or 301-796-8118

(b)(4),(b)(5)

Records processed under FOIA Request 2011-7650; Released 1/25/12

Questions? Contact FDA/CDRH/OCE/DID at CDRH-FOISTATUS@fda.hhs.gov or 301-796-8118

(b)(4),(b)(5)

Records processed under FOIA Request 2011-7650; Released 1/25/12

Questions? Contact FDA/CDRH/OCE/DID at CDRH-FOISTATUS@fda.hhs.gov or 301-796-8118

(b)(4),(b)(5)

Records processed under FOIA Request 2011-7650; Released 1/25/12

Questions? Contact FDA/CDRH/OCE/DID at CDRH-FOISTATUS@fda.hhs.gov or 301-796-8118

(b)(4),(b)(5)

Records processed under FOIA Request 2011-7650; Released 1/25/12

Questions? Contact FDA/CDRH/OCE/DID at CDRH-FOISTATUS@fda.hhs.gov or 301-796-8118

(b)(4),(b)(5)

Records processed under FOIA Request 2011-7650; Released 1/25/12

Questions? Contact FDA/CDRH/OCE/DID at CDRH-FOISTATUS@fda.hhs.gov or 301-796-8118

(b)(4),(b)(5)

Records processed under FOIA Request 2011-7650; Released 1/25/12

Questions? Contact FDA/CDRH/OCE/DID at CDRH-FOISTATUS@fda.hhs.gov or 301-796-8118

(b)(4),(b)(5)

Records processed under FOIA Request 2011-7650; Released 1/25/12

Questions? Contact FDA/CDRH/OCE/DID at CDRH-FOISTATUS@fda.hhs.gov or 301-796-8118

(b)(4),(b)(5)

Records processed under FOIA Request 2011-7650; Released 1/25/12

Questions? Contact FDA/CDRH/OCE/DID at CDRH-FOISTATUS@fda.hhs.gov or 301-796-8118

(b)(4),(b)(5)

Records processed under FOIA Request 2011-7650; Released 1/25/12

Questions? Contact FDA/CDRH/OCE/DID at CDRH-FOISTATUS@fda.hhs.gov or 301-796-8118

(b)(4),(b)(5)

Records processed under FOIA Request 2011-7650; Released 1/25/12

Questions? Contact FDA/CDRH/OCE/DID at CDRH-FOISTATUS@fda.hhs.gov or 301-796-8118

(b)(4),(b)(5)

Records processed under FOIA Request 2011-7650; Released 1/25/12

Questions? Contact FDA/CDRH/OCE/DID at CDRH-FOISTATUS@fda.hhs.gov or 301-796-8118

(b)(4),(b)(5)

Records processed under FOIA Request 2011-7650; Released 1/25/12

Questions? Contact FDA/CDRH/OCE/DID at CDRH-FOISTATUS@fda.hhs.gov or 301-796-8118

(b)(4),(b)(5)

Records processed under FOIA Request 2011-7650; Released 1/25/12

Questions? Contact FDA/CDRH/OCE/DID at CDRH-FOISTATUS@fda.hhs.gov or 301-796-8118

(b)(4),(b)(5)

Records processed under FOIA Request 2011-7650; Released 1/25/12

Questions? Contact FDA/CDRH/OCE/DID at CDRH-FOISTATUS@fda.hhs.gov or 301-796-8118

(b)(4),(b)(5)

Records processed under FOIA Request 2011-7650; Released 1/25/12

Questions? Contact FDA/CDRH/OCE/DID at CDRH-FOISTATUS@fda.hhs.gov or 301-796-8118

(b)(4),(b)(5)

Records processed under FOIA Request 2011-7650; Released 1/25/12

Questions? Contact FDA/CDRH/OCE/DID at CDRH-FOISTATUS@fda.hhs.gov or 301-796-8118

(b)(4),(b)(5)

Records processed under FOIA Request 2011-7650; Released 1/25/12

Questions? Contact FDA/CDRH/OCE/DID at CDRH-FOISTATUS@fda.hhs.gov or 301-796-8118

(b)(4),(b)(5)

Records processed under FOIA Request 2011-7650; Released 1/25/12

Questions? Contact FDA/CDRH/OCE/DID at CDRH-FOISTATUS@fda.hhs.gov or 301-796-8118

(b)(4),(b)(5)

Records processed under FOIA Request 2011-7650; Released 1/25/12

Questions? Contact FDA/CDRH/OCE/DID at CDRH-FOISTATUS@fda.hhs.gov or 301-796-8118

(b)(4),(b)(5)

Records processed under FOIA Request 2011-7650; Released 1/25/12

Questions? Contact FDA/CDRH/OCE/DID at CDRH-FOISTATUS@fda.hhs.gov or 301-796-8118

(b)(4),(b)(5)

Records processed under FOIA Request 2011-7650; Released 1/25/12

Questions? Contact FDA/CDRH/OCE/DID at CDRH-FOISTATUS@fda.hhs.gov or 301-796-8118

(b)(4),(b)(5)

Records processed under FOIA Request 2011-7650; Released 1/25/12

Questions? Contact FDA/CDRH/OCE/DID at CDRH-FOISTATUS@fda.hhs.gov or 301-796-8118

(b)(4),(b)(5)

Records processed under FOIA Request 2011-7650; Released 1/25/12

Questions? Contact FDA/CDRH/OCE/DID at CDRH-FOISTATUS@fda.hhs.gov or 301-796-8118

(b)(4),(b)(5)

Records processed under FOIA Request 2011-7650; Released 1/25/12

Questions? Contact FDA/CDRH/OCE/DID at CDRH-FOISTATUS@fda.hhs.gov or 301-796-8118

(b)(4),(b)(5)

Records processed under FOIA Request 2011-7650; Released 1/25/12

Questions? Contact FDA/CDRH/OCE/DID at CDRH-FOISTATUS@fda.hhs.gov or 301-796-8118

Records processed under FOIA Request 2011-7650; Released 1/25/12

Cleared Final IFU 1/5/2011

Acclarent™

DRAFT 1

Instructions For Use

Acclarent Cyclops™
Multi-Angle Endoscope

Acclarent Cyclops Light Guide Cable Adapters

One year after the effective date contact Acclarent Inc. for the most current version of the Instructions for Use

Deleted: 12/21/2010
Deleted: 7

Acclarent, Inc., 1525-B O'Brien Drive, Menlo Park, CA 94025 U.S.A. Customer Service: +877-SPLASTY
+650-687-5888

111

Questions? Contact FDA/CDRH/OCE/DID at CDRH-FOISTATUS@fda.hhs.gov or 301-796-8118

Records processed under FOIA Request 2011-7650; Released 1/25/12

CAREFULLY READ ALL INSTRUCTIONS PRIOR TO USE.

CAUTION: Federal (U.S.A.) law restricts this device to sale by or on the order of a physician.

PACKAGING

STERILITY:

NON-STERILE: The Acclarent Cyclops endoscope is provided NON-STERILE. The Acclarent Cyclops endoscope must be cleaned and sterilized prior to its first use, before each subsequent use and after returning from repairs. See instructions below for cleaning and sterilization.

DESCRIPTION

The Acclarent Cyclops endoscope is a rigid endoscope. It incorporates two image adjustment controls.

Specification	
Working Length	175mm
Shaft Diameter	4mm
Shaft Control	Allows image to be rotated between 0° and 160° in either direction from the 12 o'clock rotation position
Angle Control	Allows angle of view to be adjusted between 10° and 100°

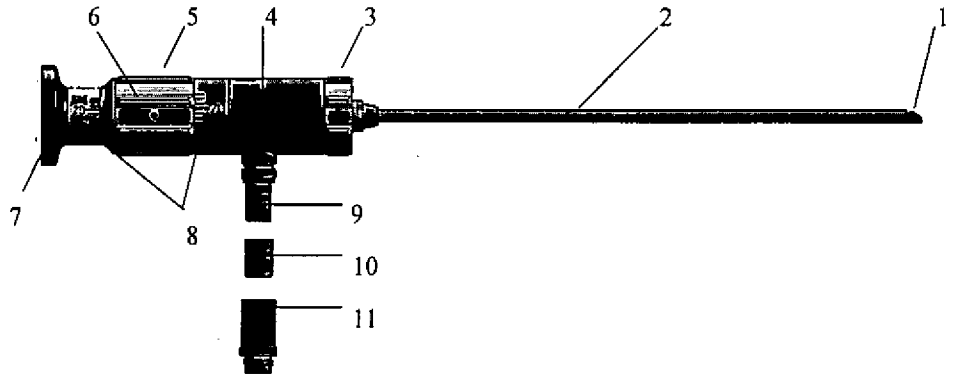

Legend:
1) Distal Window
2) Shaft
3) Shaft Control
4) Scope Body
5) Angle Control
6) Angle Indicator
7) Eyepiece
8) Angle of View Scale
9) Light Guide Post - ACMI Light Cable Configuration (fixed)
10) Wolf Light Cable Adapter (detachable)
11) Olympus / Storz Light Cable Adapter (detachable)

Figure 1. Acclarent Cyclops Multi-Angle Endoscope

Questions? Contact FDA/CDRH/OCE/DID at CDRH-FOISTATUS@fda.hhs.gov or 301-796-8118

Records processed under FOIA Request 2011-7650; Released 1/25/12

INDICATIONS FOR USE

The Acclarent Cyclops Multi-Angle Endoscope is intended to provide an endoscopic means to view the nasal cavity and nasopharynx in an operating room environment.

CONTRAINDICATIONS

Do not use Acclarent Cyclops on patients who already have active implanted devices that would be affected by a magnetic field (e.g. pacemaker, implantable cardioverter-defibrillator, cochlear implant, and deep brain stimulator) because Acclarent Cyclops contains small rare-earth permanent magnets. Additionally, do not use Acclarent Cyclops on patients with inferior vena cava filters that have been implanted within the previous two weeks.

Deleted: and

WARNINGS

- NON-STERILE: The Acclarent Cyclops endoscope is provided NON-STERILE. The Acclarent Cyclops endoscope must be cleaned and sterilized prior to its first use, before each subsequent use and after returning from repairs. See instructions below for cleaning and sterilization.
- Do not use the Acclarent Cyclops endoscope if you are unable to clean and sterilize according to the validated procedures contained in these instructions.
- Do not use a damaged or defective Acclarent Cyclops endoscope. Inspect the Acclarent Cyclops endoscope prior to each examination or procedure and before sterilization based on the instructions below.
- The connection between the Acclarent Cyclops endoscope and the light source can become very hot. Use care when handling and do not rest the scope directly on a patient or flammable material.
- Surface temperature near the distal tip may exceed 41°C if the device is operated at maximum brightness for extended periods of time. To avoid burns caused by an overheated distal tip or distal window, light cables with a diameter of 5.0mm or smaller should be used. Acclarent recommends the use of a 3.5mm fiber optic cable. Always adjust the light source to the minimum light output necessary to illuminate the endoscopic image. Prior to disconnecting the fiber optic cable, allow the endoscope to cool.
- These Instructions For Use are meant to facilitate use of the Acclarent Cyclops and are not instructions on how to perform endoscopic procedures.

PRECAUTIONS

- Do not bend the Acclarent Cyclops.
- Do not hold the Acclarent Cyclops by its shaft, as this can cause damage.
- The minimum angle of view allowed by the Acclarent Cyclops is 10°. Use caution when advancing the scope.
- To maintain optical quality, do not clean the Acclarent Cyclops or light cable adapters in an ultrasonic bath.
- Do not accelerate the cooling of the Acclarent Cyclops, as this can cause damage.
- Do not flash sterilize the Acclarent Cyclops.
- Cleaning and sterilization can only be guaranteed if the Acclarent Cyclops is cleaned and sterilized according to properly validated methods. The minimum cleaning and sterilization procedures are provided in this IFU. The Automated Cleaning procedure has not been validated as effective in accomplishing disinfection. It is the responsibility of the user to qualify any deviations from the recommended procedures.
- Manual Cleaning PLUS Automated Cleaning must be performed each time the Acclarent Cyclops and light cable adapters are reprocessed.
- If the Acclarent Cyclops was used in a patient with Creutzfeld-Jakob disease (CJD), suspected CJD or possible variants of CJD, Acclarent recommends safely disposing of the Acclarent Cyclops. For disposal instructions, see Section D.

Questions? Contact FDA/CDRH/OCE/DID at CDRH-FOISTATUS@fda.hhs.gov or 301-796-8118

Records processed under FOIA Request 2011-7650; Released 1/25/12

- When the angle control is set to greater than 70°, the illumination provided by the Acclarent Cyclops becomes less intense.

INSTRUCTIONS FOR USE

A. Inspection and Testing	1) Remove and discard the protection tube immediately on receipt. 2) Inspect the endoscope immediately upon receipt, and before and after every procedure. 3) Inspect the distal window and eyepiece for scratches, chips, fingerprints or residual debris by observing reflected light on the surfaces of the distal window and eyepiece. 4) To test image quality, look through the eyepiece. The image should be clear and distinct. If the distal window, eyepiece lens and light guide post surface are cloudy, dirty or scratched, or if the shaft is bent, scratched, dented, corroded, pitted or exhibits other surface irregularities, the image may not be clear. If the image is not clear, the Acclarent Cyclops should not be used, and should be sent in for repair or taken out of service. 5) Check light transmission by pointing the distal window of the Acclarent Cyclops at a light source and inspecting the light transmitting surface of the light guide post connector (see Figure 2). If the glass light fibers are broken, the light transmitting surface of the light guide post will illuminate unevenly. Individual broken fibers do not necessarily result in a noticeable reduction in image quality. However, if approximately 25% of the transmitting surface of the light guide post is illuminating unevenly, the endoscope should not be used, and should be sent in for repair or taken out of service. 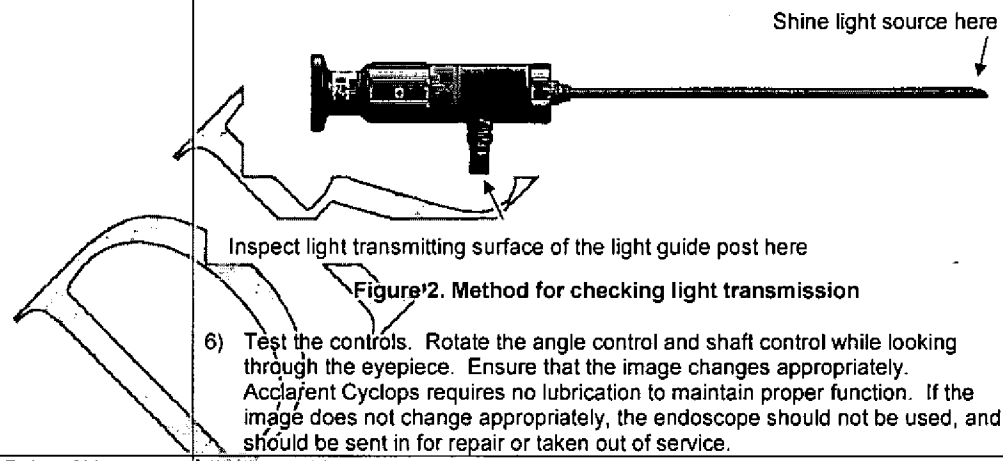 **Figure 2. Method for checking light transmission** 6) Test the controls. Rotate the angle control and shaft control while looking through the eyepiece. Ensure that the image changes appropriately. Acclarent Cyclops requires no lubrication to maintain proper function. If the image does not change appropriately, the endoscope should not be used, and should be sent in for repair or taken out of service.
B. Point of Use:	1) Assembly: a. Connect appropriate light cable adapters as required. i. To connect the Wolf light cable adapter, slide the adapter over the light guide post and tighten in place using the screw threads. ii. To connect the Olympus / Storz light cable adapter, slide the adapter over the light guide post and tighten in place using the screw threads. b. If a camera is utilized, connect the camera coupler to the eyepiece. i. The standard B-cup eyepiece can be used with cameras or universal C-mount camera couplers .

114

Questions? Contact FDA/CDRH/OCE/DID at CDRH-FOISTATUS@fda.hhs.gov or 301-796-8118

Records processed under FOIA Request 2011-7650; Released 1/25/12

c. Connect the light guide cable to the light guide post/adapter. Only light cables with a diameter of 5.0mm and smaller should be used to prevent overheating of the distal tip.

2) Usage:

a. Observe the respective manufacturer's instructions when using the Acclarent Cyclops endoscope with other implements, instruments or optical cables.

b. Acclarent recommends use with Xenon (up to 300W) light sources.

c. Make sure that the distal window, eyepiece lens or light guide post surface do not contact abrasive surfaces. Anti-fog solution (e.g. Covidien's FRED™ or DeRoyal DeFogger™) may be used with Acclarent Cyclops.to help prevent fogging of the distal window and eyepiece lens.

d. Handle the Acclarent Cyclops endoscope with care. Hard impacts, particularly to the distal end, may result in damage or cracks.

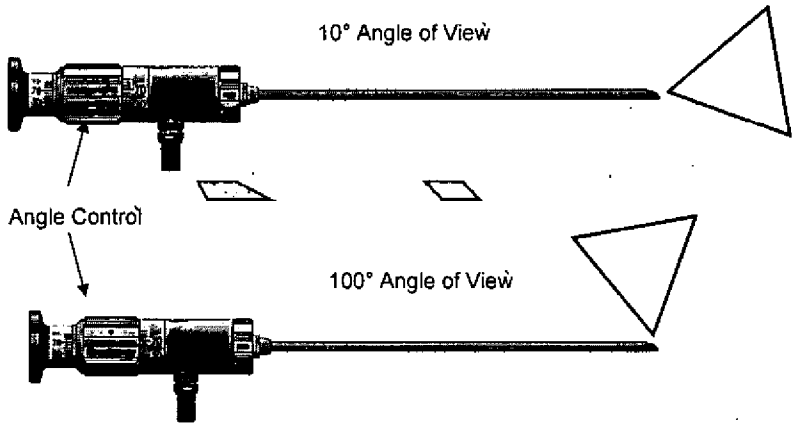

Figure 3: Acclarent Cyclops Angle of View

e. To change the Acclarent Cyclops endoscope's angle of view, rotate the Angle Control. The angle indicator on the angle control aligns with the set of angle markings on the body of the endoscope and displays the approximate angle of view selected by the user. The Acclarent Cyclops endoscope displays angles between 10° and 100° as shown in Figure 3.

f. To rotate the Acclarent Cyclops endoscope's image, rotate the shaft control. The scope allows image rotation of 160° in both directions from the 12 o'clock rotational position. A marker that displays the 12 o'clock rotational position is visible in the view. An indicator on the shaft dial illustrates the location of the 12 o'clock rotational position.

C. Point of Use Cleaning	The following steps are to be performed at the point of use: 1) During surgery, keep the device moist by periodically wiping with a wet gauze or a lap sponge and sterile water. 2) After surgery has concluded, use a wet gauze or a lap sponge and sterile water to wipe off any visible debris. Keep the device moist by adding a moist towel to the transport container until it can be cleaned according to the

115

Questions? Contact FDA/CDRH/OCE/DID at CDRH-FOISTATUS@fda.hhs.gov or 301-796-8118

Records processed under FOIA Request 2011-7650; Released 1/25/12

	reprocessing instructions described below. Cleaning should be completed on the Acclarent Cyclops and the light cable adapters within 30 minutes following their use.
D. General Considerations for Endoscope reprocessing:	Complete Preparation for Cleaning, Manual Cleaning plus Automated Cleaning and Sterilization each time when reprocessing the Acclarent Cyclops and light cable adapters. 1) All reprocessing should be completed by personnel trained in the appropriate reprocessing techniques and safety. All reprocessing personnel should don appropriate personal protective attire. 2) Cleaning should be completed on the Acclarent Cyclops and the light cable adapters within 30 minutes following their use. Keep device continuously moist with a moist towel prior to cleaning. 3) If the Acclarent Cyclops endoscope was used in a patient with Creutzfeld-Jakob disease (CJD), suspected CJD or possible variants of CJD, Acclarent recommends safely disposing of the Acclarent Cyclops endoscope. The safest and most unambiguous method for ensuring that there is no risk of residual infectivity on contaminated instruments and other materials is to discard and destroy them by incineration. For more information regarding exposure to Creutzfeld-Jakob disease (CJD) or possible variants of CJD, and for information about disposing contaminated devices, please see the following references: a. Brown, S. A., Merritt, K., Woods, T. O., & Busick, D. N. (2005). Effects on instruments of the World Health Organization – Recommended protocols for decontamination after possible exposure to transmissible spongiform encephalopathy contaminated tissue. Appl Biomater, 72B, 186-190. DOI 10.1002/jbm.b.30125 b. World Health Organization Infection Control Guideline for Transmissible Spongiform Encephalopathies. Geneva, Switzerland, March, 1999 available from http://www.who.int/csr/resources/publications/bse/WHO_CDS_CSR_APH_2000_3/en/ ⚠ **CAUTION**: Do not place the Acclarent Cyclops directly on or next to an active implantable device that may be affected by magnetic fields as the device contains small rare earth permanent magnets.
E. Preparation for Cleaning	1) Disassembly: a. Disconnect the light cable from the light guide post. b. If a camera was utilized, disconnect the camera coupling device from the eyepiece. c. Remove any light cable adapters used. d. Keep *Acclarent* Cyclops and light cable adapters continuously moist until Manual Cleaning can commence at the point of central reprocessing. The device may be kept moist by adding a moist towel to the transport container.
F. Cleaning: Manual	The following steps are to be performed at the point of central reprocessing: 1) Manual Cleaning: a. Prepare a neutral pH enzymatic detergent (e.g. Enzol®) per the manufacturer's instructions (e.g. for Enzol®) mix 1 oz/gal with

116

Questions? Contact FDA/CDRH/OCE/DID at CDRH-FOISTATUS@fda.hhs.gov or 301-796-8118

Records processed under FOIA Request 2011-7650; Released 1/25/12

lukewarm tap water). Prepare a fresh mixture of cleaning solution for each use.

b. Immerse the Acclarent Cyclops and light cable adapters entirely in the detergent solution for at least 15 minutes.

c. Use a soft bristle brush (e.g. a standard size tooth brush) to remove any debris / soil from the Acclarent Cyclops and a soft bristled pipe cleaner for the light cable adapters while they are submerged. Ensure that the brush and the pipe cleaner can access the hard to reach areas such as cracks, crevices and threads on the light guide post and light guide adapters. Ensure that all visible debris is removed..

d. Rinse the endoscope and light cable adapters under cold running tap water for at least 1 minute.

⚠ **CAUTION**: Manual Cleaning PLUS Automated Cleaning must be performed each time the Acclarent Cyclops and light cable adapters are reprocessed.

⚠ **CAUTION**: The Automated Cleaning reprocessing parameters have not been validated as effective in accomplishing *disinfection* of the Acclarent Cyclops.

G. Cleaning: Automated

The following steps are to be performed at the point of central reprocessing after completion of Manual Cleaning (described above):

1) Automated Cleaning:

a. Place the Acclarent Cyclops together with its light cable adapters into a separate mesh basket. Ensure that the Acclarent Cyclops and light cable adapters do not touch each other when placed into the basket.

b. Place a mesh screen over the basket to prevent the Acclarent Cyclops and light cable adapters from coming out of the basket during processing.

c. Place the mesh basket with Acclarent Cyclops and light cable adapters into a general instrument washer-disinfector (e.g. Amsco Steris 444 Washer / Disinfector) to clean the Acclarent Cyclops and light cable adapters.

d. Select a neutral pH enzymatic detergent (e.g. Enzol) and a neutral pH instrument cleaner (e.g. RenuKlenz™). Prepare per the instructions of the detergent manufacturer (for example, Enzol 1oz/gal and RenuKlenz ¼oz/gallon). Prepare a fresh mixture of cleaning solution for each use.

e. Run the washing machine cycle per the instructions provided by the manufacturer. The minimum cleaning cycle is described below in table 1:

Table 1: Automatic Cleaning Parameters:

Phase	Recirculation Time	Water Temperature	Detergent Type
Pre Wash	3 minutes	Cold tap water	N/A
Enzyme Wash	5 minutes	Hot tap water	Neutral pH enzymatic detergent
Wash 1	5 minutes	65°C (Set Point)	Neutral pH instrument

DRAFT

117

Questions? Contact FDA/CDRH/OCE/DID at CDRH-FOISTATUS@fda.hhs.gov or 301-796-8118

Records processed under FOIA Request 2011-7650; Released 1/25/12

				cleaner
	Rinse 1	2 minutes	Hot tap water	N/A
	Dry Phase	7 minutes	115°C	N/A

f. Remove the Acclarent Cyclops and light cable adapters from the washing machine following the cleaning cycle and after allowing sufficient time for the devices to cool so they can be safely handled.
g. Inspect the devices to ensure that all visible soil, stains and debris have been removed.

⚠ **CAUTION:** Manual Cleaning PLUS Automated Cleaning must be performed each time the Acclarent Cyclops and light cable adapters are reprocessed.

CAUTION: The Automated Cleaning reprocessing parameters have not been validated as effective in accomplishing *disinfection* of the Acclarent Cyclops.

H. Post-cleaning Inspection and Testing

1) After cleaning is complete, inspect the Acclarent Cyclops per the instructions in Section A.

I. Steam Sterilization

1) Do not "Flash" sterilize the *Acclarent* Cyclops or light cable adapters.
2) Ensure the Acclarent Cyclops and light cable adapters are disassembled before sterilization.
3) Double wrap the Acclarent Cyclops and light cable adapters with 1-ply polypropylene wrap (e.g. Kimguard KC600).
4) Complete sterilization per AAMI ST79:2006, A1:2008,A2:2009.

Table 2

Sterilization Method	Pre-Vacuum
Pulses (minimum)	3
Temperature	132°C / 270° F
Exposure time	4 minutes
Drying Time	20 minutes

5) After sterilization, allow the Acclarent Cyclops, and light cable adapters to cool down to room temperature. Do not accelerate cooling, as this may damage the Acclarent Cyclops endoscope.

J. Storage

1) Store the Acclarent Cyclops endoscope in a dry, clean and safe place at room temperature, in its wrapped sterilization container.
2) Acclarent does not recommend storing the Acclarent Cyclops and light cable adapters in their shipping box.

K. Disposal

1) For disposal, observe standard protocols for disposal of surgical devices (see Section D for references).

118.

Questions? Contact FDA/CDRH/OCE/DID at CDRH-FOISTATUS@fda.hhs.gov or 301-796-8118

Records processed under FOIA Request 2011-7650; Released 1/25/12

Technical service, maintenance or repairs:

- Contact Acclarent Customer Service:
- Acclarent, Inc.
  1525-B O'Brien Drive
  Menlo Park, CA 94025
  U.S.A.
- Toll Free: 1-877-SPLASTY (1-877-775-2789)
- Before returning any product to Acclarent, please contact Acclarent Customer Service to obtain a return goods authorization and product return packaging.
- Please clean and sterilize the endoscope and mark it as "Sterilized" prior to return.
- Modifications carried out to medical equipment may result in the loss of guarantee/warranty rights and forfeiture of applicable licenses.

GRAPHIC SYMBOLS CONTAINED IN DEVICE LABELING

Non Sterile	Non-Sterile		Working Length
i	Consult Instructions For Use	Rx ONLY	On Order of Physician Only
	Scope Outer Diameter	REF	Product Code
SN	Serial Number	Latex	Contains no Natural Rubber Latex
CE	CE Mark	EC REP	European Authorized Representative
	Light Cable Adapter		Keep Away from Sunlight
	Manufacturer		Manufacturing Date
	Caution		

©2010 Acclarent, Inc. All rights reserved.

DRAFT

Manufactured for:
Acclarent, Inc.
1525-B O'Brien Drive
Menlo Park, CA 94025

USA
Toll Free: 1-877-SPLASTY (1-877-775-2789)

Questions? Contact FDA/CDRH/OCE/DID at CDRH-FOISTATUS@fda.hhs.gov or 301-796-8118

Records processed under FOIA Request 2011-7650; Released 1/25/12

Food and Drug Administration
Office of Device Evaluation &
Office of In Vitro Diagnostics

COVER SHEET MEMORANDUM

From: Reviewer Name Susan Rudy CRNP

Subject: 510(k) Number K100577/S2

To: The Record

Please list CTS decision code T/H

☐ Refused to accept (Note: this is considered the first review cycle, See Screening Checklist http://eroom.fda.gov/eRoomReq/Files/CDRH3/CDRHPremarketNotification510kProgram/0_5631/Screening%20Checklist%207%202%2007.doc)

☒ Hold (Additional Information or Telephone Hold).

☐ Final Decision (SE, SE with Limitations, NSE, Withdrawn, etc.).

Please complete the following for a final clearance decision (i.e., SE, SE with Limitations, etc.):		YES	NO
Indications for Use Page	*Attach IFU*	✓	
510(k) Summary /510(k) Statement	*Attach Summary*	✓	
Truthful and Accurate Statement.	*Must be present for a Final Decision*	✓	
Is the device Class III? If yes, does firm include Class III Summary?	*Must be present for a Final Decision*		✓
Does firm reference standards? (If yes, please attach form from http://www.fda.gov/opacom/morechoices/fdaforms/FDA-3654.pdf)		✓	
Is this a combination product? (Please specify category N, see http://eroom.fda.gov/eRoomReq/Files/CDRH3/CDRHPremarketNotification510kProgram/0_413b/COMBINATION%20PRODUCT%20ALGORITHM%20(REVISED%203-12-03).DOC			✓
Is this a reprocessed single use device? (Guidance for Industry and FDA Staff – MDUFMA - Validation Data in 510(k)s for Reprocessed Single-Use Medical Devices, http://www.fda.gov/cdrh/ode/guidance/1216.html)			✓
Is this device intended for pediatric use only?			✓
Is this a prescription device? (If both prescription & OTC, check both boxes.)		✓	
Did the application include a completed FORM FDA 3674, Certification with Requirements of ClinicalTrials.gov Data Bank?			✓
Is clinical data necessary to support the review of this 510(k)? Did the application include a completed FORM FDA 3674, *Certification with Requirements of ClinicalTrials.gov Data Bank*? (If not, then applicant must be contacted to obtain completed form.)			✓
Does this device include an Animal Tissue Source?			✓
All Pediatric Patients age<=21			
Neonate/Newborn (Birth to 28 days)			
Infant (29 days -< 2 years old)			
Child (2 years -< 12 years old)			
Adolescent (12 years -< 18 years old)			
Transitional Adolescent A (18 - <21 years old) Special considerations are being given to this group, different from adults age ≥ 21 (different device design or testing, different protocol procedures, etc.)			

Rev. 7/2/07

377

Questions? Contact FDA/CDRH/OCE/DID at CDRH-FOISTATUS@fda.hhs.gov or 301-796-8118

Transitional Adolescent B (18 -<= 21; No special considerations compared to adults => 21 years old)

Nanotechnology

Is this device subject to the Tracking Regulation? (Medical Device Tracking Guidance, http://www.fda.gov/cdrh/comp/guidance/169.html) *Contact OC.* ✓

Regulation Number	Class*	Product Code

(*If unclassified, see 510(k) Staff)

Additional Product Codes: _____

Review: _____ ENTB 12/13/10

(Branch Chief) (Branch Code) (Date)

Final Review: _____

(Division Director) (Date)

Records processed under FOIA Request 2011-7650; Released 1/25/12

DEPARTMENT OF HEALTH AND HUMAN SERVICES **MEMORANDUM**

Food and Drug Administration
Office of Device Evaluation
9200 Corporate Boulevard
Rockville, MD 20850

Premarket Notification [510(k)] Review
Traditional/Abbreviated
K100577 / S002

Date: 12/8/2010
To: The Record
From: Susan Rudy, MSN, CRNP, CORLN

Office: ODE
Division: DONED / ENTB

510(k) Holder: Acclarent, Inc.
Device Name: Acclarent Cyclops Multi-angle Endoscope (Model TBD)
Contact: Keri Yen, Regulatory Affairs Manager
Phone: 650 687 5874
Fax: 680 687 4449
Email: keyn@acclarent.com

I. Purpose

The 510(k) holder would like to introduce the Acclarent Cyclops Multi-angle Endoscope – Model TBD into interstate commerce.

II. Administrative Requirements

	Yes	No
Indications for Use page	√	
Truthful and Accuracy Statement	√	
510(k) Summary or 510(k) Statement	√	
Standards Form	S001	

III. Device Description

	Yes	No
Is the device life-supporting or life sustaining?		√
Is the device implanted (short-term or long-term)?		√
Does the device design use software?		√
Is the device sterile?		√

(b)(4),(b)(5)

Records processed under FOIA Request 2011-7650; Released 1/25/12

Questions? Contact FDA/CDRH/OCE/DID at CDRH-FOISTATUS@fda.hhs.gov or 301-796-8118

(b)(4),(b)(5)

Records processed under FOIA Request 2011-7650; Released 1/25/12

Questions? Contact FDA/CDRH/OCE/DID at CDRH-FOISTATUS@fda.hhs.gov or 301-796-8118

(b)(4),(b)(5)

Records processed under FOIA Request 2011-7650; Released 1/25/12

Questions? Contact FDA/CDRH/OCE/DID at CDRH-FOISTATUS@fda.hhs.gov or 301-796-8118

(b)(4),(b)(5)

Records processed under FOIA Request 2011-7650; Released 1/25/12

Questions? Contact FDA/CDRH/OCE/DID at CDRH-FOISTATUS@fda.hhs.gov or 301-796-8118

(b)(4),(b)(5)

Records processed under FOIA Request 2011-7650; Released 1/25/12

Questions? Contact FDA/CDRH/OCE/DID at CDRH-FOISTATUS@fda.hhs.gov or 301-796-8118

(b)(4),(b)(5)

Records processed under FOIA Request 2011-7650; Released 1/25/12

Questions? Contact FDA/CDRH/OCE/DID at CDRH-FOISTATUS@fda.hhs.gov or 301-796-8118

(b)(4),(b)(5)

Records processed under FOIA Request 2011-7650; Released 1/25/12

Questions? Contact FDA/CDRH/OCE/DID at CDRH-FOISTATUS@fda.hhs.gov or 301-796-8118

(b)(4),(b)(5)

Records processed under FOIA Request 2011-7650; Released 1/25/12

Questions? Contact FDA/CDRH/OCE/DID at CDRH-FOISTATUS@fda.hhs.gov or 301-796-8118

(b)(4),(b)(5)

Records processed under FOIA Request 2011-7650; Released 1/25/12

Questions? Contact FDA/CDRH/OCE/DID at CDRH-FOISTATUS@fda.hhs.gov or 301-796-8118

(b)(4),(b)(5)

Records processed under FOIA Request 2011-7650; Released 1/25/12

Questions? Contact FDA/CDRH/OCE/DID at CDRH-FOISTATUS@fda.hhs.gov or 301-796-8118

(b)(4),(b)(5)

Records processed under FOIA Request 2011-7650; Released 1/25/12

Questions? Contact FDA/CDRH/OCE/DID at CDRH-FOISTATUS@fda.hhs.gov or 301-796-8118

(b)(4),(b)(5)

Records processed under FOIA Request 2011-7650; Released 1/25/12

Questions? Contact FDA/CDRH/OCE/DID at CDRH-FOISTATUS@fda.hhs.gov or 301-796-8118

(b)(4),(b)(5)

Records processed under FOIA Request 2011-7650; Released 1/25/12

Questions? Contact FDA/CDRH/OCE/DID at CDRH-FOISTATUS@fda.hhs.gov or 301-796-8118

(b)(4),(b)(5)

Records processed under FOIA Request 2011-7650; Released 1/25/12

Questions? Contact FDA/CDRH/OCE/DID at CDRH-FOISTATUS@fda.hhs.gov or 301-796-8118

(b)(4),(b)(5)

Records processed under FOIA Request 2011-7650; Released 1/25/12

Questions? Contact FDA/CDRH/OCE/DID at CDRH-FOISTATUS@fda.hhs.gov or 301-796-8118

(b)(4),(b)(5)

Records processed under FOIA Request 2011-7650; Released 1/25/12

Questions? Contact FDA/CDRH/OCE/DID at CDRH-FOISTATUS@fda.hhs.gov or 301-796-8118

(b)(4),(b)(5)

Records processed under FOIA Request 2011-7650; Released 1/25/12

Questions? Contact FDA/CDRH/OCE/DID at CDRH-FOISTATUS@fda.hhs.gov or 301-796-8118

(b)(4),(b)(5)

Records processed under FOIA Request 2011-7650; Released 1/25/12

Questions? Contact FDA/CDRH/OCE/DID at CDRH-FOISTATUS@fda.hhs.gov or 301-796-8118

(b)(4),(b)(5)

Records processed under FOIA Request 2011-7650; Released 1/25/12

Questions? Contact FDA/CDRH/OCE/DID at CDRH-FOISTATUS@fda.hhs.gov or 301-796-8118

(b)(4),(b)(5)

Records processed under FOIA Request 2011-7650; Released 1/25/12

Questions? Contact FDA/CDRH/OCE/DID at CDRH-FOISTATUS@fda.hhs.gov or 301-796-8118

(b)(4),(b)(5)

Records processed under FOIA Request 2011-7650; Released 1/25/12

Questions? Contact FDA/CDRH/OCE/DID at CDRH-FOISTATUS@fda.hhs.gov or 301-796-8118

(b)(4),(b)(5)

Records processed under FOIA Request 2011-7650; Released 1/25/12

Questions? Contact FDA/CDRH/OCE/DID at CDRH-FOISTATUS@fda.hhs.gov or 301-796-8118

(b)(4),(b)(5)

Records processed under FOIA Request 2011-7650; Released 1/25/12

Questions? Contact FDA/CDRH/OCE/DID at CDRH-FOISTATUS@fda.hhs.gov or 301-796-8118

(b)(4),(b)(5)

Records processed under FOIA Request 2011-7650; Released 1/25/12

Questions? Contact FDA/CDRH/OCE/DID at CDRH-FOISTATUS@fda.hhs.gov or 301-796-8118

(b)(4),(b)(5)

Records processed under FOIA Request 2011-7650; Released 1/25/12

Questions? Contact FDA/CDRH/OCE/DID at CDRH-FOISTATUS@fda.hhs.gov or 301-796-8118

(b)(4),(b)(5)

Records processed under FOIA Request 2011-7650; Released 1/25/12

Questions? Contact FDA/CDRH/OCE/DID at CDRH-FOISTATUS@fda.hhs.gov or 301-796-8118

(b)(4),(b)(5)

Records processed under FOIA Request 2011-7650; Released 1/25/12

Questions? Contact FDA/CDRH/OCE/DID at CDRH-FOISTATUS@fda.hhs.gov or 301-796-8118

(b)(4),(b)(5)

Records processed under FOIA Request 2011-7650; Released 1/25/12

Questions? Contact FDA/CDRH/OCE/DID at CDRH-FOISTATUS@fda.hhs.gov or 301-796-8118

Records processed under FOIA Request 2011-7650; Released 1/25/12

(b)(4),(b)(5)

9.

10

11

The deficiencies identified above represent the issues that we believe need to be resolved before our review of your 510(k) submission can be successfully completed. In developing the deficiencies, we carefully considered the statutory criteria as defined in Section 513(i) of the Federal Food, Drug, and Cosmetic Act (Act) for determining substantial equivalence of your device.

You may not market this device until you have provided adequate information described above and required by 21 CFR 807.87(l), and you have received a letter from FDA allowing you to do so. If you market the device without conforming to these requirements, you will be in violation of the Act. You may, however, distribute this device for investigational purposes to obtain clinical data if needed to establish substantial equivalence. Clinical investigations of this device must be conducted in accordance with the investigational device exemption (IDE) regulations (21 CFR 812). If the information, or a request for an extension of time, is not received within 30 days, we will consider your premarket notification to be withdrawn and your submission will be deleted from our system. If you submit the requested information after 30 days it will be considered and processed as a new 510(k)(21 CFR 807.87(l)); therefore, all

Records processed under FOIA Request 2011-7650; Released 1/25/12

information previously submitted must be resubmitted so that your new 510(k) is complete. For guidance on 510(k) actions, please see our guidance document entitled, "FDA and Industry Actions on Premarket Notification (510(k)) Submissions: Effect on FDA Review Clock and Performance Assessment" at http://www.fda.gov/downloads/MedicalDevices/DeviceRegulationandGuidance/GuidanceDocuments/UCM089738.pdf

If the submitter does submit a written request for an extension, FDA will permit the 510(k) to remain on hold for up to a maximum of 180 days from the date of the additional information request.

The purpose of this document is to assist agency staff and the device industry in understanding how various FDA and industry actions that may be taken on 510(k)s should affect the review clock for purposes of meeting the Medical Device User Fee and Modernization Act. .

The requested information, or a request for an extension of time, should reference your above 510(k) number and should be submitted in duplicate to:

U.S. Food and Drug Administration
Center for Devices and Radiological Heath
Document Mail Center – WO66-0609
10903 New Hampshire Avenue
Silver Spring, MD 20993-0002

If you have any questions concerning the contents of the letter, please contact Susan Rudy, MSN, CRNP, CORLN, OCN® at (301) 796-5620. If you need information or assistance concerning the IDE regulations, please contact the Division of Small Manufacturers, International and Consumer Assistance at its toll-free number (800) 638-2041 or at (301) 796-7100, or at its Internet address http://www.fda.gov/MedicalDevices/ResourcesforYou/Industry/default.htm.

Records processed under FOIA Request 2011-7650; Released 1/25/12

DEPARTMENT OF HEALTH & HUMAN SERVICES

Food and Drug Administration
ODE / DONED / ENTB
WO66 Rm 2574
10903 New Hampshire Avenue
Silver Spring, MD 20993-0002

TO: **The Record**

FROM: Susan Rudy, MSN, CRNP, CORLN, ~~OCN®~~ S. Rudy CRNP 12/10/10
Nurse Consultant and Family Nurse Practitioner, ENTB

DATE: 12/10/2010

RE: **K100577 / S1 A1 and S002 Acclarent Cyclops Multiangle Endoscope**
Sterility review – Traditional 510(k)

RECOMMENDATION: TH

(b)(4),(b)(5)

Questions? Contact FDA/CDRH/OCE/DID at CDRH-FOISTATUS@fda.hhs.gov or 301-796-8118

4/10

(b)(4),(b)(5),Technical Information-CCI
Records processed under FOIA Request 2011-7650; Released 1/25/12

Questions? Contact FDA/CDRH/OCE/DID at CDRH-FOISTATUS@fda.hhs.gov or 301-796-8118

(b)(4),(b)(5),Technical Information-CCI
Records processed under FOIA Request 2011-7650; Released 1/25/12

Questions? Contact FDA/CDRH/OCE/DID at CDRH-FOISTATUS@fda.hhs.gov or 301-796-8118

(b)(4),(b)(5),Technical Information-CCI
Records processed under FOIA Request 2011-7650; Released 1/25/12

Questions? Contact FDA/CDRH/OCE/DID at CDRH-FOISTATUS@fda.hhs.gov or 301-796-8118

(b)(4),(b)(5),Technical Information-CCI
Records processed under FOIA Request 2011-7650; Released 1/25/12

Questions? Contact FDA/CDRH/OCE/DID at CDRH-FOISTATUS@fda.hhs.gov or 301-796-8118

(b)(4),(b)(5),Technical Information-CCI
Records processed under FOIA Request 2011-7650; Released 1/25/12

Questions? Contact FDA/CDRH/OCE/DID at CDRH-FOISTATUS@fda.hhs.gov or 301-796-8118

(b)(4),(b)(5),Technical Information-CCI
Records processed under FOIA Request 2011-7650; Released 1/25/12

Questions? Contact FDA/CDRH/OCE/DID at CDRH-FOISTATUS@fda.hhs.gov or 301-796-8118

(b)(4),(b)(5),Technical Information-CCI
Records processed under FOIA Request 2011-7650; Released 1/25/12

Questions? Contact FDA/CDRH/OCE/DID at CDRH-FOISTATUS@fda.hhs.gov or 301-796-8118

(b)(4),(b)(5),Technical Information-CCI
Records processed under FOIA Request 2011-7650; Released 1/25/12

Questions? Contact FDA/CDRH/OCE/DID at CDRH-FOISTATUS@fda.hhs.gov or 301-796-8118

(b)(4),(b)(5),Technical Information-CCI
Records processed under FOIA Request 2011-7650; Released 1/25/12

Questions? Contact FDA/CDRH/OCE/DID at CDRH-FOISTATUS@fda.hhs.gov or 301-796-8118

(b)(4),(b)(5),Technical Information-CCI
Records processed under FOIA Request 2011-7650; Released 1/25/12

Questions? Contact FDA/CDRH/OCE/DID at CDRH-FOISTATUS@fda.hhs.gov or 301-796-8118

(b)(4),(b)(5),Technical Information-CCI
Records processed under FOIA Request 2011-7650; Released 1/25/12

Questions? Contact FDA/CDRH/OCE/DID at CDRH-FOISTATUS@fda.hhs.gov or 301-796-8118

(b)(4),(b)(5),Technical Information-CCI
Records processed under FOIA Request 2011-7650; Released 1/25/12

Questions? Contact FDA/CDRH/OCE/DID at CDRH-FOISTATUS@fda.hhs.gov or 301-796-8118

(b)(4),(b)(5),Technical Information-CCI
Records processed under FOIA Request 2011-7650; Released 1/25/12

Questions? Contact FDA/CDRH/OCE/DID at CDRH-FOISTATUS@fda.hhs.gov or 301-796-8118

(b)(4),(b)(5),Technical Information-CCI
Records processed under FOIA Request 2011-7650; Released 1/25/12

Questions? Contact FDA/CDRH/OCE/DID at CDRH-FOISTATUS@fda.hhs.gov or 301-796-8118

(b)(4),(b)(5),Technical Information-CCI
Records processed under FOIA Request 2011-7650; Released 1/25/12

Questions? Contact FDA/CDRH/OCE/DID at CDRH-FOISTATUS@fda.hhs.gov or 301-796-8118

(b)(4),(b)(5),Technical Information-CCI
Records processed under FOIA Request 2011-7650; Released 1/25/12

Questions? Contact FDA/CDRH/OCE/DID at CDRH-FOISTATUS@fda.hhs.gov or 301-796-8118

(b)(4),(b)(5),Technical Information-CCI
Records processed under FOIA Request 2011-7650; Released 1/25/12

Questions? Contact FDA/CDRH/OCE/DID at CDRH-FOISTATUS@fda.hhs.gov or 301-796-8118

(b)(4),(b)(5),Technical Information-CCI
Records processed under FOIA Request 2011-7650; Released 1/25/12

Questions? Contact FDA/CDRH/OCE/DID at CDRH-FOISTATUS@fda.hhs.gov or 301-796-8118

(b)(4),(b)(5),Technical Information-CCI
Records processed under FOIA Request 2011-7650; Released 1/25/12

Questions? Contact FDA/CDRH/OCE/DID at CDRH-FOISTATUS@fda.hhs.gov or 301-796-8118

(b)(4),(b)(5),Technical Information-CCI
Records processed under FOIA Request 2011-7650; Released 1/25/12

Questions? Contact FDA/CDRH/OCE/DID at CDRH-FOISTATUS@fda.hhs.gov or 301-796-8118

(b)(4),(b)(5),Technical Information-CCI
Records processed under FOIA Request 2011-7650; Released 1/25/12

Questions? Contact FDA/CDRH/OCE/DID at CDRH-FOISTATUS@fda.hhs.gov or 301-796-8118

(b)(4),(b)(5),Technical Information-CCI
Records processed under FOIA Request 2011-7650; Released 1/25/12

Questions? Contact FDA/CDRH/OCE/DID at CDRH-FOISTATUS@fda.hhs.gov or 301-796-8118

(b)(4),(b)(5),Technical Information-CCI
Records processed under FOIA Request 2011-7650; Released 1/25/12

Questions? Contact FDA/CDRH/OCE/DID at CDRH-FOISTATUS@fda.hhs.gov or 301-796-8118

(b)(4),(b)(5),Technical Information-CCI
Records processed under FOIA Request 2011-7650; Released 1/25/12

Questions? Contact FDA/CDRH/OCE/DID at CDRH-FOISTATUS@fda.hhs.gov or 301-796-8118

(b)(4),(b)(5),Technical Information-CCI
Records processed under FOIA Request 2011-7650; Released 1/25/12

Questions? Contact FDA/CDRH/OCE/DID at CDRH-FOISTATUS@fda.hhs.gov or 301-796-8118

(b)(4),(b)(5),Technical Information-CCI
Records processed under FOIA Request 2011-7650; Released 1/25/12

Questions? Contact FDA/CDRH/OCE/DID at CDRH-FOISTATUS@fda.hhs.gov or 301-796-8118

(b)(4),(b)(5),Technical Information-CCI
Records processed under FOIA Request 2011-7650; Released 1/25/12

Questions? Contact FDA/CDRH/OCE/DID at CDRH-FOISTATUS@fda.hhs.gov or 301-796-8118

(b)(4),(b)(5),Technical Information-CCI
Records processed under FOIA Request 2011-7650; Released 1/25/12

Questions? Contact FDA/CDRH/OCE/DID at CDRH-FOISTATUS@fda.hhs.gov or 301-796-8118

(b)(4),(b)(5),Technical Information-CCI
Records processed under FOIA Request 2011-7650; Released 1/25/12

Questions? Contact FDA/CDRH/OCE/DID at CDRH-FOISTATUS@fda.hhs.gov or 301-796-8118

(b)(4),(b)(5),Technical Information-CCI
Records processed under FOIA Request 2011-7650; Released 1/25/12

Questions? Contact FDA/CDRH/OCE/DID at CDRH-FOISTATUS@fda.hhs.gov or 301-796-8118

(b)(4),(b)(5),Technical Information-CCI
Records processed under FOIA Request 2011-7650; Released 1/25/12

Questions? Contact FDA/CDRH/OCE/DID at CDRH-FOISTATUS@fda.hhs.gov or 301-796-8118

(b)(4),(b)(5),Technical Information-CCI
Records processed under FOIA Request 2011-7650; Released 1/25/12

Questions? Contact FDA/CDRH/OCE/DID at CDRH-FOISTATUS@fda.hhs.gov or 301-796-8118

(b)(4),(b)(5),Technical Information-CCI
Records processed under FOIA Request 2011-7650; Released 1/25/12

Questions? Contact FDA/CDRH/OCE/DID at CDRH-FOISTATUS@fda.hhs.gov or 301-796-8118

(b)(4),(b)(5),Technical Information-CCI
Records processed under FOIA Request 2011-7650; Released 1/25/12

Questions? Contact FDA/CDRH/OCE/DID at CDRH-FOISTATUS@fda.hhs.gov or 301-796-8118

(b)(4),(b)(5),Technical Information-CCI
Records processed under FOIA Request 2011-7650; Released 1/25/12

Questions? Contact FDA/CDRH/OCE/DID at CDRH-FOISTATUS@fda.hhs.gov or 301-796-8118

(b)(4),(b)(5),Technical Information-CCI
Records processed under FOIA Request 2011-7650; Released 1/25/12

Questions? Contact FDA/CDRH/OCE/DID at CDRH-FOISTATUS@fda.hhs.gov or 301-796-8118

(b)(4),(b)(5),Technical Information-CCI
Records processed under FOIA Request 2011-7650; Released 1/25/12

Questions? Contact FDA/CDRH/OCE/DID at CDRH-FOISTATUS@fda.hhs.gov or 301-796-8118

(b)(4),(b)(5),Technical Information-CCI
Records processed under FOIA Request 2011-7650; Released 1/25/12

Questions? Contact FDA/CDRH/OCE/DID at CDRH-FOISTATUS@fda.hhs.gov or 301-796-8118

(b)(4),(b)(5),Technical Information-CCI
Records processed under FOIA Request 2011-7650; Released 1/25/12

Questions? Contact FDA/CDRH/OCE/DID at CDRH-FOISTATUS@fda.hhs.gov or 301-796-8118

(b)(4),(b)(5),Technical Information-CCI
Records processed under FOIA Request 2011-7650; Released 1/25/12

Questions? Contact FDA/CDRH/OCE/DID at CDRH-FOISTATUS@fda.hhs.gov or 301-796-8118

(b)(4),(b)(5),Technical Information-CCI
Records processed under FOIA Request 2011-7650; Released 1/25/12

Questions? Contact FDA/CDRH/OCE/DID at CDRH-FOISTATUS@fda.hhs.gov or 301-796-8118

(b)(4),(b)(5),Technical Information-CCI
Records processed under FOIA Request 2011-7650; Released 1/25/12

Questions? Contact FDA/CDRH/OCE/DID at CDRH-FOISTATUS@fda.hhs.gov or 301-796-8118

(b)(4),(b)(5),Technical Information-CCI
Records processed under FOIA Request 2011-7650; Released 1/25/12

Questions? Contact FDA/CDRH/OCE/DID at CDRH-FOISTATUS@fda.hhs.gov or 301-796-8118

(b)(4),(b)(5),Technical Information-CCI
Records processed under FOIA Request 2011-7650; Released 1/25/12

Questions? Contact FDA/CDRH/OCE/DID at CDRH-FOISTATUS@fda.hhs.gov or 301-796-8118

(b)(4),(b)(5),Technical Information-CCI
Records processed under FOIA Request 2011-7650; Released 1/25/12

Questions? Contact FDA/CDRH/OCE/DID at CDRH-FOISTATUS@fda.hhs.gov or 301-796-8118

(b)(4),(b)(5),Technical Information-CCI
Records processed under FOIA Request 2011-7650; Released 1/25/12

Questions? Contact FDA/CDRH/OCE/DID at CDRH-FOISTATUS@fda.hhs.gov or 301-796-8118

(b)(4),(b)(5),Technical Information-CCI
Records processed under FOIA Request 2011-7650; Released 1/25/12

Questions? Contact FDA/CDRH/OCE/DID at CDRH-FOISTATUS@fda.hhs.gov or 301-796-8118

(b)(4),(b)(5),Technical Information-CCI
Records processed under FOIA Request 2011-7650; Released 1/25/12

Questions? Contact FDA/CDRH/OCE/DID at CDRH-FOISTATUS@fda.hhs.gov or 301-796-8118

(b)(4),(b)(5),Technical Information-CCI
Records processed under FOIA Request 2011-7650; Released 1/25/12

Questions? Contact FDA/CDRH/OCE/DID at CDRH-FOISTATUS@fda.hhs.gov or 301-796-8118

(b)(4),(b)(5),Technical Information-CCI
Records processed under FOIA Request 2011-7650; Released 1/25/12

Questions? Contact FDA/CDRH/OCE/DID at CDRH-FOISTATUS@fda.hhs.gov or 301-796-8118

(b)(4),(b)(5),Technical Information-CCI
Records processed under FOIA Request 2011-7650; Released 1/25/12

Questions? Contact FDA/CDRH/OCE/DID at CDRH-FOISTATUS@fda.hhs.gov or 301-796-8118

(b)(4),(b)(5),Technical Information-CCI
Records processed under FOIA Request 2011-7650; Released 1/25/12

Questions? Contact FDA/CDRH/OCE/DID at CDRH-FOISTATUS@fda.hhs.gov or 301-796-8118

(b)(4),(b)(5),Technical Information-CCI
Records processed under FOIA Request 2011-7650; Released 1/25/12

Questions? Contact FDA/CDRH/OCE/DID at CDRH-FOISTATUS@fda.hhs.gov or 301-796-8118

(b)(4),(b)(5),Technical Information-CCI
Records processed under FOIA Request 2011-7650; Released 1/25/12

Questions? Contact FDA/CDRH/OCE/DID at CDRH-FOISTATUS@fda.hhs.gov or 301-796-8118

(b)(4),(b)(5),Technical Information-CCI
Records processed under FOIA Request 2011-7650; Released 1/25/12

Questions? Contact FDA/CDRH/OCE/DID at CDRH-FOISTATUS@fda.hhs.gov or 301-796-8118

(b)(4),(b)(5),Technical Information-CCI
Records processed under FOIA Request 2011-7650; Released 1/25/12

Questions? Contact FDA/CDRH/OCE/DID at CDRH-FOISTATUS@fda.hhs.gov or 301-796-8118

(b)(4),(b)(5),Technical Information-CCI
Records processed under FOIA Request 2011-7650; Released 1/25/12

Questions? Contact FDA/CDRH/OCE/DID at CDRH-FOISTATUS@fda.hhs.gov or 301-796-8118

(b)(4),(b)(5),Technical Information-CCI
Records processed under FOIA Request 2011-7650; Released 1/25/12

Questions? Contact FDA/CDRH/OCE/DID at CDRH-FOISTATUS@fda.hhs.gov or 301-796-8118

(b)(4),(b)(5),Technical Information-CCI
Records processed under FOIA Request 2011-7650; Released 1/25/12

Questions? Contact FDA/CDRH/OCE/DID at CDRH-FOISTATUS@fda.hhs.gov or 301-796-8118

(b)(4),(b)(5),Technical Information-CCI
Records processed under FOIA Request 2011-7650; Released 1/25/12

Questions? Contact FDA/CDRH/OCE/DID at CDRH-FOISTATUS@fda.hhs.gov or 301-796-8118

(b)(4),(b)(5),Technical Information-CCI
Records processed under FOIA Request 2011-7650; Released 1/25/12

Questions? Contact FDA/CDRH/OCE/DID at CDRH-FOISTATUS@fda.hhs.gov or 301-796-8118

(b)(4),(b)(5),Technical Information-CCI
Records processed under FOIA Request 2011-7650; Released 1/25/12

Questions? Contact FDA/CDRH/OCE/DID at CDRH-FOISTATUS@fda.hhs.gov or 301-796-8118

(b)(4),(b)(5),Technical Information-CCI
Records processed under FOIA Request 2011-7650; Released 1/25/12

Questions? Contact FDA/CDRH/OCE/DID at CDRH-FOISTATUS@fda.hhs.gov or 301-796-8118

(b)(4),(b)(5),Technical Information-CCI
Records processed under FOIA Request 2011-7650; Released 1/25/12

Questions? Contact FDA/CDRH/OCE/DID at CDRH-FOISTATUS@fda.hhs.gov or 301-796-8118

(b)(4),(b)(5),Technical Information-CCI
Records processed under FOIA Request 2011-7650; Released 1/25/12

Questions? Contact FDA/CDRH/OCE/DID at CDRH-FOISTATUS@fda.hhs.gov or 301-796-8118

(b)(4),(b)(5),Technical Information-CCI
Records processed under FOIA Request 2011-7650; Released 1/25/12

Questions? Contact FDA/CDRH/OCE/DID at CDRH-FOISTATUS@fda.hhs.gov or 301-796-8118

(b)(4),(b)(5),Technical Information-CCI
Records processed under FOIA Request 2011-7650; Released 1/25/12

Questions? Contact FDA/CDRH/OCE/DID at CDRH-FOISTATUS@fda.hhs.gov or 301-796-8118

(b)(4),(b)(5),Technical Information-CCI
Records processed under FOIA Request 2011-7650; Released 1/25/12

Questions? Contact FDA/CDRH/OCE/DID at CDRH-FOISTATUS@fda.hhs.gov or 301-796-8118

(b)(4),(b)(5),Technical Information-CCI
Records processed under FOIA Request 2011-7650; Released 1/25/12

Questions? Contact FDA/CDRH/OCE/DID at CDRH-FOISTATUS@fda.hhs.gov or 301-796-8118

(b)(4),(b)(5),Technical Information-CCI
Records processed under FOIA Request 2011-7650; Released 1/25/12

Questions? Contact FDA/CDRH/OCE/DID at CDRH-FOISTATUS@fda.hhs.gov or 301-796-8118

(b)(4),(b)(5)

Records processed under FOIA Request 2011-7650; Released 1/25/12

Questions? Contact FDA/CDRH/OCE/DID at CDRH-FOISTATUS@fda.hhs.gov or 301-796-8118

(b)(4),(b)(5)

Records processed under FOIA Request 2011-7650; Released 1/25/12

Questions? Contact FDA/CDRH/OCE/DID at CDRH-FOISTATUS@fda.hhs.gov or 301-796-8118

(b)(4),(b)(5)

Records processed under FOIA Request 2011-7650; Released 1/25/12

Questions? Contact FDA/CDRH/OCE/DID at CDRH-FOISTATUS@fda.hhs.gov or 301-796-8118

(b)(4),(b)(5)

Records processed under FOIA Request 2011-7650; Released 1/25/12

Questions? Contact FDA/CDRH/OCE/DID at CDRH-FOISTATUS@fda.hhs.gov or 301-796-8118

(b)(4),(b)(5)

Records processed under FOIA Request 2011-7650; Released 1/25/12

Questions? Contact FDA/CDRH/OCE/DID at CDRH-FOISTATUS@fda.hhs.gov or 301-796-8118

(b)(4),(b)(5)

Records processed under FOIA Request 2011-7650; Released 1/25/12

Questions? Contact FDA/CDRH/OCE/DID at CDRH-FOISTATUS@fda.hhs.gov or 301-796-8118

(b)(4),(b)(5)

Records processed under FOIA Request 2011-7650; Released 1/25/12

Questions? Contact FDA/CDRH/OCE/DID at CDRH-FOISTATUS@fda.hhs.gov or 301-796-8118

(b)(4),(b)(5)

Records processed under FOIA Request 2011-7650; Released 1/25/12

Questions? Contact FDA/CDRH/OCE/DID at CDRH-FOISTATUS@fda.hhs.gov or 301-796-8118

(b)(4),(b)(5)

Records processed under FOIA Request 2011-7650; Released 1/25/12

Questions? Contact FDA/CDRH/OCE/DID at CDRH-FOISTATUS@fda.hhs.gov or 301-796-8118

(b)(4),(b)(5)

Records processed under FOIA Request 2011-7650; Released 1/25/12

Questions? Contact FDA/CDRH/OCE/DID at CDRH-FOISTATUS@fda.hhs.gov or 301-796-8118

(b)(4),(b)(5)

Records processed under FOIA Request 2011-7650; Released 1/25/12

Questions? Contact FDA/CDRH/OCE/DID at CDRH-FOISTATUS@fda.hhs.gov or 301-796-8118

(b)(4),(b)(5)

Records processed under FOIA Request 2011-7650; Released 1/25/12

Questions? Contact FDA/CDRH/OCE/DID at CDRH-FOISTATUS@fda.hhs.gov or 301-796-8118

(b)(4),(b)(5)

Records processed under FOIA Request 2011-7650; Released 1/25/12

Questions? Contact FDA/CDRH/OCE/DID at CDRH-FOISTATUS@fda.hhs.gov or 301-796-8118

(b)(4),(b)(5)

Records processed under FOIA Request 2011-7650; Released 1/25/12

Questions? Contact FDA/CDRH/OCE/DID at CDRH-FOISTATUS@fda.hhs.gov or 301-796-8118

(b)(4),(b)(5)

Records processed under FOIA Request 2011-7650; Released 1/25/12

Questions? Contact FDA/CDRH/OCE/DID at CDRH-FOISTATUS@fda.hhs.gov or 301-796-8118

(b)(4),(b)(5)

Records processed under FOIA Request 2011-7650; Released 1/25/12

Questions? Contact FDA/CDRH/OCE/DID at CDRH-FOISTATUS@fda.hhs.gov or 301-796-8118

(b)(4),(b)(5)

Records processed under FOIA Request 2011-7650; Released 1/25/12

Questions? Contact FDA/CDRH/OCE/DID at CDRH-FOISTATUS@fda.hhs.gov or 301-796-8118

(b)(4),(b)(5)

Records processed under FOIA Request 2011-7650; Released 1/25/12

Questions? Contact FDA/CDRH/OCE/DID at CDRH-FOISTATUS@fda.hhs.gov or 301-796-8118

(b)(4),(b)(5)

Records processed under FOIA Request 2011-7650; Released 1/25/12

Questions? Contact FDA/CDRH/OCE/DID at CDRH-FOISTATUS@fda.hhs.gov or 301-796-8118

(b)(4),(b)(5)

Records processed under FOIA Request 2011-7650; Released 1/25/12

Questions? Contact FDA/CDRH/OCE/DID at CDRH-FOISTATUS@fda.hhs.gov or 301-796-8118

FOI - Page 391 of 1276

Questions? Contact FDA/CDRH/OCE/DID at CDRH-FOISTATUS@fda.hhs.gov or 301-796-8118

Records processed under FOIA Request 2011-7650; Released 1/25/12

DEPARTMENT OF HEALTH & HUMAN SERVICES

Food and Drug Administration
ODE / DONED / ENTB
WO66 Rm 2574
10903 New Hampshire Avenue
Silver Spring, MD 20993-0002

TO: **The Record**

FROM: Susan Rudy, MSN, CRNP, CORLN, ~~OCN®~~ S. Rudy CRNP 12/3/2010
Nurse Consultant and Family Nurse Practitioner, ENTB

DATE: 12/3/2010

RE: **K100577 "A002" Acclarent Cyclops Multiangle endoscope**

RECOMMENDATION: INCOMPLETE – data converts to S001 / A1

(b)(4)

812

(b)(4),(b)(5),Testing Data
Records processed under FOIA Request 2011-7650; Released 1/25/12

Questions? Contact FDA/CDRH/OCE/DID at CDRH-FOISTATUS@fda.hhs.gov or 301-796-8118

(b)(4),(b)(5),Testing Data
Records processed under FOIA Request 2011-7650; Released 1/25/12

Questions? Contact FDA/CDRH/OCE/DID at CDRH-FOISTATUS@fda.hhs.gov or 301-796-8118

(b)(4),(b)(5),Testing Data
Records processed under FOIA Request 2011-7650; Released 1/25/12

Questions? Contact FDA/CDRH/OCE/DID at CDRH-FOISTATUS@fda.hhs.gov or 301-796-8118

(b)(4),(b)(5),Testing Data
Records processed under FOIA Request 2011-7650; Released 1/25/12

Questions? Contact FDA/CDRH/OCE/DID at CDRH-FOISTATUS@fda.hhs.gov or 301-796-8118

(b)(4),(b)(5),Testing Data
Records processed under FOIA Request 2011-7650; Released 1/25/12

Questions? Contact FDA/CDRH/OCE/DID at CDRH-FOISTATUS@fda.hhs.gov or 301-796-8118

(b)(4),(b)(5),Testing Data
Records processed under FOIA Request 2011-7650; Released 1/25/12

Questions? Contact FDA/CDRH/OCE/DID at CDRH-FOISTATUS@fda.hhs.gov or 301-796-8118

(b)(4),(b)(5),Testing Data
Records processed under FOIA Request 2011-7650; Released 1/25/12

Questions? Contact FDA/CDRH/OCE/DID at CDRH-FOISTATUS@fda.hhs.gov or 301-796-8118

(b)(4),(b)(5),Testing Data
Records processed under FOIA Request 2011-7650; Released 1/25/12

Questions? Contact FDA/CDRH/OCE/DID at CDRH-FOISTATUS@fda.hhs.gov or 301-796-8118

(b)(4),(b)(5),Testing Data
Records processed under FOIA Request 2011-7650; Released 1/25/12

Questions? Contact FDA/CDRH/OCE/DID at CDRH-FOISTATUS@fda.hhs.gov or 301-796-8118

(b)(4),(b)(5),Testing Data
Records processed under FOIA Request 2011-7650; Released 1/25/12

Questions? Contact FDA/CDRH/OCE/DID at CDRH-FOISTATUS@fda.hhs.gov or 301-796-8118

Records processed under FOIA Request 2011-7650; Released 1/25/12

510(k) "SUBSTANTIAL EQUIVALENCE" DECISION-MAKING PROCESS

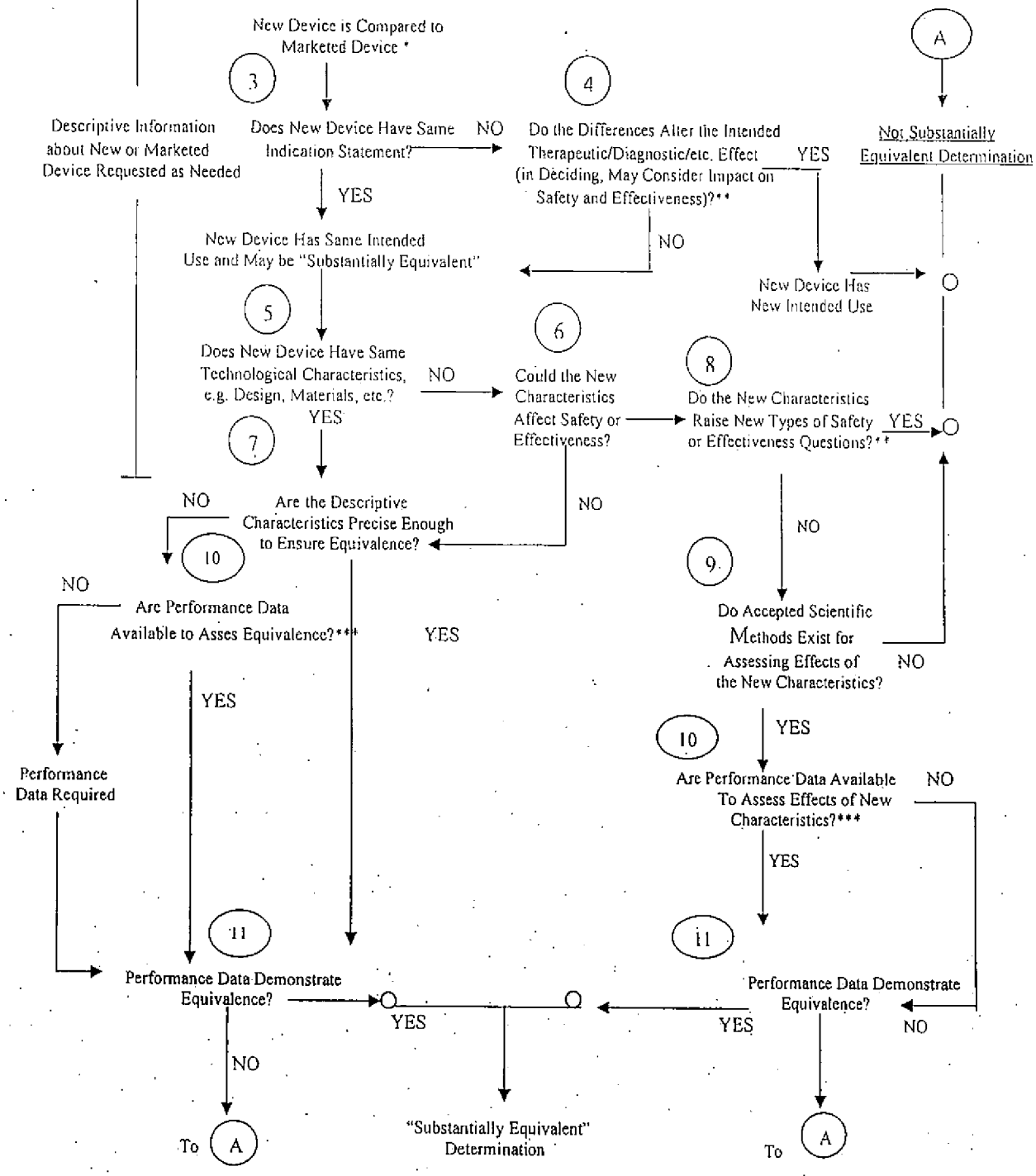

❖ 510(k) Submissions compare new devices to marketed devices. FDA requests additional information if the relationship between marketed and "predicate" (pre-Amendments or reclassified post-Amendments) devices is unclear.

❖❖ This decision is normally based on descriptive information alone, but limited testing information is sometimes required.

❖❖❖ Data maybe in the 510(k), other 510(k)s, the Center's classification files, or the literature.

513

Records processed under FOIA Request 2011-7650; Released 1/25/12

Food and Drug Administration
Office of Device Evaluation
9200 Corporate Boulevard
Rockville, MD 20850

COVER SHEET MEMORANDUM

From: Reviewer(s) Name(s): Susan Rudy, MSN, CRNP – team leader
Vasant Malshet, Phd, Vasant Dasika, PhD, Daniel Clupper, PhD - Reviewers

Subject: 510(k) Number K100577

To: The Record - It is my recommendation that the subject 510(k) Notification:

Please list CTS decision code : **TH**
☐Refused to accept (see Pre-Review Form, note this is considered the first review cycle).
√Hold (Additional Information or Telephone Hold).
☐Final Decision (SE, SE with Limitations, NSE, Withdrawn, etc.).

Indications for Use Page (Please attach)	√YES	☐NO
510(k) Summary (Please attach)/510(k) Statement	√YES	☐NO
Truthful and Accurate Statement (Must be present for a Final Decision.)	√YES	☐NO
If Class III, does firm include Class III Summary? (Must be present for a Final Decision.)	☐YES	√NA
Does firm reference standards? (If yes, please attach form on H Drive 510k/Boilers.)	√YES	☐NO
Is this a combination product? (Please specify category, see H drive 510k/Boilers algorithm _____)	☐YES	√NO
Is this device intended for pediatric use only?	☐YES	√NO
Is this a prescription device? (If both prescription & OTC, check both boxes.)	√YES	☐NO
Is clinical data necessary to support the review of this 510(k)?	☐YES	√NO
Does this device include an Animal Tissue Source?	☐YES	√NO
Is this device subject to Section 522 Postmarket Surveillance? (Postmarket Surveillance Guidance, http://www.fda.gov/cdrh/osb/guidance/316.html) Contact OSB.	☐YES	√NO
Is this device subject to the Tracking Regulation? (Medical Device Tracking Guidance, http://www.fda.gov/cdrh/comp/guidance/169.html) Contact Compliance.	☐YES	√NO

Regulation Number, Class, Product Code (If unclassified, see 510(k) Staff):
21 CFR 874.4760; Class II; Product code EOB

Additional Product Code(s) (if any):

Review: [signature] CNTB 7/27/2010
(Branch Chief) (Branch Code) (Date)

Final Review: _____
(Division Director) (Date)

715

Questions? Contact FDA/CDRH/OCE/DID at CDRH-FOISTATUS@fda.hhs.gov or 301-796-8118

Records processed under FOIA Request 2011-7650; Released 1/25/12

(b)(4),(b)(5)

Questions? Contact FDA/CDRH/OCE/DID at CDRH-FOISTATUS@fda.hhs.gov or 301-796-8118

716

Screening Checklist for Traditional/Abbreviated Premarket Notification [510(k)] Submissions

Title	Related Information	Present	Missing	N/A
MDUFMA Cover Sheet	Medical Device User Fee Cover Sheet www.fda.gov/oc/mdufma/coversheet.html	√		
CDRH Premarket Review Submission Cover Sheet	CDRH Premarket Review Submission Cover Sheet www.fda.gov/opacom/morechoices/fdaforms/FDA-3514.pdf	√		
510(k) Cover Letter	Appendix A of "Guidance for Industry and FDA Staff Format for Traditional and Abbreviated 510(k)s" dated August 12, 2005	√		
Indications for Use Statement	Device Advice " Content of a 510(k)" Section D www.fda.gov/cdrh/devadvice/314312.html#link_6	√		
510(k) Summary or 510(k) Statement	Device Advice " Content of a 510(k)" Section E www.fda.gov/cdrh/devadvice/314312.html#link_7	√		
Truthful and Accuracy Statement	Device Advice " Content of a 510(k)" Section G www.fda.gov/cdrh/devadvice/314312.html#link_9	√		
Class III Summary and Certification	Class III Summary and Certification Form www.fda.gov/cdrh/manual/stmnciii.html			√
Financial Certification or Disclosure Statement	FORM FDA 3454, Certification: Financial Interests and Arrangements of Clinical Investigators www.fda.gov/opacom/morechoices/fdaforms/FDA-3454.pdf FORM FDA 3455, Disclosure: Financial Interests and Arrangements of Clinical Investigators www.fda.gov/opacom/morechoices/fdaforms/FDA-3455.pdf Financial Disclosure by Clinical Investigators www.fda.gov/oc/guidance/financialdis.html.			√

717

Title	Related Information	Present	Missing	N/A
Declarations of Conformity and Summary Reports (Abbreviated 510(k)s)	Use of Standards in Substantial Equivalence Determinations www.fda.gov/cdrh/ode/guidance/1131.html. FDA Standards program www.fda.gov/cdrh/stdsprog.html. Declaration of conformity www.fda.gov/cdrh/devadvice/3145.html#link_9 Required Elements for Declaration of Conformity to Recognized Standard www.fda.gov/cdrh/ode/reqrecstand.html	S001 Appendix D		
Executive Summary	See section 10 in Chapter II of "Guidance for Industry and FDA Staff Format for Traditional and Abbreviated 510(k)s" dated August 12, 2005	√		
Device Description	See section 11 in Chapter II of "Guidance for Industry and FDA Staff Format for Traditional and Abbreviated 510(k)s" dated August 12, 2005	√ Section 2		
Substantial Equivalence Discussion	Guidance on the CDRH Premarket Notification Review Program 6/30/86 (K86-3), www.fda.gov/cdrh/k863.html	√ Section 3 & Appendix E		
Proposed Labeling	Device Advice " Content of a 510(k)" Section H www.fda.gov/cdrh/devadvice/314312.html#link_10	√ App. D S1 App.A		
Sterilization/Shelf Life	Updated 510(k) Sterility Review Guidance (K90-1) www.fda.gov/cdrh/ode/guidance/361.html For reuse of single use devices, see Guidance for Industry and FDA Staff – Medical Device User Fee and Modernization Act of 2002 Validation Data in Premarket Notification Submissions (510(k)s) for Reprocessed Single-Use Medical Devices www.fda.gov/cdrh/ode/guidance/1216.html	√ Section 7 Appendix F & G S1 App. B, C & E		
Biocompatibility	FDA Blue Book Memo, G95-1, Use of International Standard ISO-10993, "Biological Evaluation of Medical Devices Part 1: Evaluation and Testing" www.fda.gov/cdrh/g951.html	√Section 6		

718

Title	Related Information	Present	Missing	N/A
Software	Guidance for the Content of Premarket Submissions for Software Contained in Medical Devices www.fda.gov/cdrh/ode/software.html			√
Electromagnetic Compatibility/Electrical Safety	CDRH Medical Device Electromagnetic Compatibility Program www.fda.gov/cdrh/emc See also IEC 60601-1- 2 Medical Electrical Equipment -- Part 1: General Requirements for Safety; Electromagnetic Compatibility -- Requirements and Tests (Second Edition, 2001)	S001		
Performance Testing – Bench	See section 18 in Chapter II of "Guidance for Industry and FDA Staff Format for Traditional and Abbreviated 510(k)s" dated August 12, 2005	√ Section 5		
Performance Testing – Animal	See section 19 in Chapter II of "Guidance for Industry and FDA Staff Format for Traditional and Abbreviated 510(k)s" dated August 12, 2005			√
Performance Testing – Clinical	See section 20 in Chapter II of "Guidance for Industry and FDA Staff Format for Traditional and Abbreviated 510(k)s" dated August 12, 2005 Certification/Disclosure Forms: Financial Interests and Arrangements of Clinical Investigators www.fda.gov/opacom/morechoices/fdaforms/FDA-3454.pdf www.fda.gov/opacom/morechoices/fdaforms/FDA-3455.pdf			√
Kit Certification	See pages 3-12 and 3-13 in the Premarket Notification [510] Manual and the Convenience Kits Interim Regulatory Guidance http://www.fda.gov/MedicalDevices/Device RegulationandGuidance/GuidanceDocuments/ucm 080216.htm			√

Records processed under FOIA Request 2011-7650; Released 1/25/12

Rudy, Susan

From: Rudy, Susan
Sent: Tuesday, July 27, 2010 8:46 AM
To: 'Keri Yen'
Cc: Nandkumar, Srinivas
Subject: K100577 / S001 Acclarent Cyclops Multiangle Endoscope - Decision for Telephone Hold / Additional Info needed

Importance: High

Attachments: K100577 S001 Acclarent Cyclops AI letter Final.pdf

K100577
Acclarent Cycl

Dear Ms. Yen-

(b)(4),(b)(5)

Thank you for your attention to these matters.

Susan F. Rudy, MSN, CRNP, CORLN, OCN
Nurse Consultant and Family Nurse Practitioner
FDA/CDRH/ODE/DONED
Ear, Nose & Throat Devices Branch
WO66 Rm 2574
10903 New Hampshire Ave.
Silver Spring, MD 20993
T: 301 796 6472
F: 301 827 4601
E: Susan.Rudy@fda.hhs.gov

Questions? Contact FDA/CDRH/OCE/DID at CDRH-FOISTATUS@fda.hhs.gov or 301-796-8118

720

THIS MESSAGE IS INTENDED ONLY FOR THE USE OF THE PARTY TO WHOM IT IS ADDRESSED AND MAY CONTAIN INFORMATION THAT IS PRIVILEGED, CONFIDENTIAL, AND PROTECTED FROM DISCLOSURE UNDER ' AW. If you are not the addressee, or a person authorized to deliver the document to the addressee, you are hereby ɔtified that any review disclosure, dissemination, copy or other action based on the content of this communication is not authorized. If you have received this document in error please immediately notify us by e-mail or telephone.

Records processed under FOIA Request 2011-7650; Released 1/25/12

K100577 /S001 Acclarent Cyclops® Multi-angle Endoscope

Acclarent, Inc.
Ms. Keri Yen, Regulatory Affairs Manager
1525-B O'Brien Drive
Menlo Park, CA 94025
kyen@acclarent.com
Tel: 650 687 5874
FAX: 650 687 4449

Re: K100577
Trade Name: Acclarent Cyclops® Multi-Angle Endoscope
Dated: June 30, 2010
Received: July 1, 2010

Dear Ms. Yen:

We have reviewed your Section 510(k) premarket notification of intent to market the device referenced above. We cannot determine if the device is substantially equivalent to a legally marketed predicate device based solely on the information you provided. To complete the review of your submission, we require additional information.

(b)(4),(b)(5)

(b)(4),(b)(5)

Records processed under FOIA Request 2011-7650; Released 1/25/12

Questions? Contact FDA/CDRH/OCE/DID at CDRH-FOISTATUS@fda.hhs.gov or 301-796-8118

(b)(4),(b)(5)

Records processed under FOIA Request 2011-7650; Released 1/25/12

Questions? Contact FDA/CDRH/OCE/DID at CDRH-FOISTATUS@fda.hhs.gov or 301-796-8118

(b)(4),(b)(5)

Records processed under FOIA Request 2011-7650; Released 1/25/12

Questions? Contact FDA/CDRH/OCE/DID at CDRH-FOISTATUS@fda.hhs.gov or 301-796-8118

(b)(4),(b)(5)

Records processed under FOIA Request 2011-7650; Released 1/25/12

Questions? Contact FDA/CDRH/OCE/DID at CDRH-FOISTATUS@fda.hhs.gov or 301-796-8118

(b)(4),(b)(5)

Records processed under FOIA Request 2011-7650; Released 1/25/12

Questions? Contact FDA/CDRH/OCE/DID at CDRH-FOISTATUS@fda.hhs.gov or 301-796-8118

Records processed under FOIA Request 2011-7650; Released 1/25/12

The deficiencies identified above represent the issues that we believe need to be resolved before our review of your 510(k) submission can be successfully completed. In developing the deficiencies, we carefully considered the statutory criteria as defined in Section 513(i) of the Federal Food, Drug, and Cosmetic Act (Act) for determining substantial equivalence of your device.

You may not market this device until you have provided adequate information described above and required by 21 CFR 807.87(l), and you have received a letter from FDA allowing you to do so. If you market the device without conforming to these requirements, you will be in violation of the Act. You may, however, distribute this device for investigational purposes to obtain clinical data if needed to establish substantial equivalence. Clinical investigations of this device must be conducted in accordance with the investigational device exemption (IDE) regulations (21 CFR 812).**If the information, or a request for an extension of time, is not received within 30 days, we will consider your premarket notification to be withdrawn and your submission will be deleted from our system. If you submit the requested information after 30 days it will be considered and processed as a new 510(k)(21 CFR 807.87(l)); therefore, all information previously submitted must be resubmitted so that your new 510(k) is complete. For guidance on 510(k) actions, please see our guidance document entitled, "FDA and Industry Actions on Premarket Notification (510(k)) Submissions: Effect on FDA Review Clock and Performance Assessment" at** http://www.fda.gov/downloads/MedicalDevices/DeviceRegulationandGuidance/GuidanceDocuments/UCM089738.pdf

If the submitter does submit a written request for an extension, FDA will permit the 510(k) to remain on hold for up to a maximum of 180 days from the date of the additional information request.

The purpose of this document is to assist agency staff and the device industry in understanding how various FDA and industry actions that may be taken on 510(k)s should affect the review clock for purposes of meeting the Medical Device User Fee and Modernization Act. .

The requested information, or a request for an extension of time, should reference your above 510(k) number and should be submitted in duplicate to:

U.S. Food and Drug Administration
Center for Devices and Radiological Heath
Document Mail Center – WO66-0609
10903 New Hampshire Avenue
Silver Spring, MD 20993-0002

If you have any questions concerning the contents of the letter, please contact Susan Rudy, MSN, CRNP, CORLN, OCN® at (301) 796-5620. If you need information or assistance

Questions? Contact FDA/CDRH/OCE/DID at CDRH-FOISTATUS@fda.hhs.gov or 301-796-8118

Records processed under FOIA Request 2011-7650; Released 1/25/12

concerning the IDE regulations, please contact the Division of Small Manufacturers, International and Consumer Assistance at its toll-free number (800) 638-2041 or at (301) 796-7100, or at its Internet address http://www.fda.gov/MedicalDevices/ResourcesforYou/Industry/default.htm.

Questions? Contact FDA/CDRH/OCE/DID at CDRH-FOISTATUS@fda.hhs.gov or 301-796-8118

Records processed under FOIA Request 2011-7650; Released 1/25/12

DEPARTMENT OF HEALTH AND HUMAN SERVICES **MEMORANDUM**

Food and Drug Administration
Office of Device Evaluation
9200 Corporate Boulevard
Rockville, MD 20850

Premarket Notification [510(k)] Review
Traditional/Abbreviated
K100577

Date: 7/22/2010
To: The Record
From: Susan Rudy, MSN, CRNP, CORLN

Office: ODE
Division: DONED / ENTB

510(k) Holder: Acclarent, Inc.
Device Name: Acclarent Cyclops Multi-angle Endoscope (Model TBD)
Contact: Keri Yen, Regulatory Affairs Manager
Phone: 650 687 5874
Fax: 680 687 4449
Email: keyn@acclarent.com

I. Purpose

The 510(k) holder would like to introduce the Acclarent Cyclops Multi-angle Endoscope – Model TBD (K100577) into interstate commerce.

II. Administrative Requirements

	Yes	No
Indications for Use page	√	
Truthful and Accuracy Statement	√	
510(k) Summary or 510(k) Statement	√	
Standards Form	S001	

III. Device Description

	Yes	No
Is the device life-supporting or life sustaining?		√
Is the device implanted (short-term or long-term)?		√
Does the device design use software?		√
Is the device sterile?		√

730

Questions? Contact FDA/CDRH/OCE/DID at CDRH-FOISTATUS@fda.hhs.gov or 301-796-8118

Records processed under FOIA Request 2011-7650; Released 1/25/12

Is the device reusable (not reprocessed single use)? Are "cleaning" instructions included for the end user?	√√	

Summary of Device Description

This is a 4mm diameter rigid unchanneled endoscope with a standard eyepiece and standard camera coupler. The distal tip is built with a 10 degree angulation. Glass fibers travel through the device shaft to carry light from the light source to the distal end of the device to provide illumination.

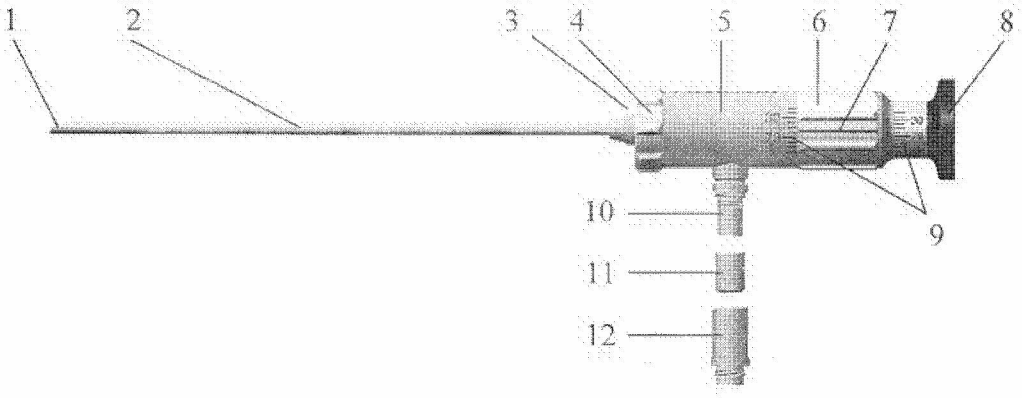

Legend:

1) Object lens
2) Shaft
3) Protection Tube Connector
4) Shaft Control
5) Scope Body
6) Angle Control
7) Angle Indicator Line
8) Eyepiece
9) Angle of View Scale
10) Light Guide Post - ACMI Light Cable Configuration (fixed)
11) Wolf Light Cable Adapter (detachable)
12) Olympus / Storz Light Cable Adapter (detachable)

Figure 1. Acclarent Cyclops Multi-Angle Endoscope

(b)(4)

Questions? Contact FDA/CDRH/OCE/DID at CDRH-FOISTATUS@fda.hhs.gov or 301-796-8118

(b)(4),(b)(5)

Records processed under FOIA Request 2011-7650; Released 1/25/12

Questions? Contact FDA/CDRH/OCE/DID at CDRH-FOISTATUS@fda.hhs.gov or 301-796-8118

(b)(4),(b)(5)

Records processed under FOIA Request 2011-7650; Released 1/25/12

Questions? Contact FDA/CDRH/OCE/DID at CDRH-FOISTATUS@fda.hhs.gov or 301-796-8118

(b)(4),(b)(5)

Records processed under FOIA Request 2011-7650; Released 1/25/12

Questions? Contact FDA/CDRH/OCE/DID at CDRH-FOISTATUS@fda.hhs.gov or 301-796-8118

(b)(4),(b)(5)

Records processed under FOIA Request 2011-7650; Released 1/25/12

Questions? Contact FDA/CDRH/OCE/DID at CDRH-FOISTATUS@fda.hhs.gov or 301-796-8118

(b)(4),(b)(5)

Records processed under FOIA Request 2011-7650; Released 1/25/12

Questions? Contact FDA/CDRH/OCE/DID at CDRH-FOISTATUS@fda.hhs.gov or 301-796-8118

(b)(4),(b)(5)

Records processed under FOIA Request 2011-7650; Released 1/25/12

Questions? Contact FDA/CDRH/OCE/DID at CDRH-FOISTATUS@fda.hhs.gov or 301-796-8118

(b)(4),(b)(5)

Records processed under FOIA Request 2011-7650; Released 1/25/12

Questions? Contact FDA/CDRH/OCE/DID at CDRH-FOISTATUS@fda.hhs.gov or 301-796-8118

(b)(4),(b)(5)

Records processed under FOIA Request 2011-7650; Released 1/25/12

Questions? Contact FDA/CDRH/OCE/DID at CDRH-FOISTATUS@fda.hhs.gov or 301-796-8118

(b)(4),(b)(5)

Records processed under FOIA Request 2011-7650; Released 1/25/12

Questions? Contact FDA/CDRH/OCE/DID at CDRH-FOISTATUS@fda.hhs.gov or 301-796-8118

(b)(4),(b)(5)

Records processed under FOIA Request 2011-7650; Released 1/25/12

Questions? Contact FDA/CDRH/OCE/DID at CDRH-FOISTATUS@fda.hhs.gov or 301-796-8118

(b)(4),(b)(5)

Records processed under FOIA Request 2011-7650; Released 1/25/12

Questions? Contact FDA/CDRH/OCE/DID at CDRH-FOISTATUS@fda.hhs.gov or 301-796-8118

Records processed under FOIA Request 2011-7650; Released 1/25/12

Product Code(s): EOB

S Rudy CRNP
Susan F. Rudy, MSN, CRNP, CORLN - Reviewer

7/22/2010
Date

Branch Chief – Srinivas Nandkumar, Ph.D.

7/27/2010
Date

Questions? Contact FDA/CDRH/OCE/DID at CDRH-FOISTATUS@fda.hhs.gov or 301-796-8118

(b)(4),(b)(5),Technical Information-CCI,Testing Data
Records processed under FOIA Request 2011-7650; Released 1/25/12

Questions? Contact FDA/CDRH/OCE/DID at CDRH-FOISTATUS@fda.hhs.gov or 301-796-8118

(b)(4),(b)(5),Technical Information-CCI,Testing Data
Records processed under FOIA Request 2011-7650; Released 1/25/12

Questions? Contact FDA/CDRH/OCE/DID at CDRH-FOISTATUS@fda.hhs.gov or 301-796-8118

(b)(4),(b)(5),Technical Information-CCI,Testing Data
Records processed under FOIA Request 2011-7650; Released 1/25/12

Questions? Contact FDA/CDRH/OCE/DID at CDRH-FOISTATUS@fda.hhs.gov or 301-796-8118

(b)(4),(b)(5),Technical Information-CCI,Testing Data
Records processed under FOIA Request 2011-7650; Released 1/25/12

Questions? Contact FDA/CDRH/OCE/DID at CDRH-FOISTATUS@fda.hhs.gov or 301-796-8118

(b)(4),(b)(5),Technical Information-CCI,Testing Data
Records processed under FOIA Request 2011-7650; Released 1/25/12

Questions? Contact FDA/CDRH/OCE/DID at CDRH-FOISTATUS@fda.hhs.gov or 301-796-8118

(b)(4),(b)(5),Technical Information-CCI,Testing Data
Records processed under FOIA Request 2011-7650; Released 1/25/12

Questions? Contact FDA/CDRH/OCE/DID at CDRH-FOISTATUS@fda.hhs.gov or 301-796-8118

(b)(4),(b)(5),Technical Information-CCI,Testing Data
Records processed under FOIA Request 2011-7650; Released 1/25/12

Questions? Contact FDA/CDRH/OCE/DID at CDRH-FOISTATUS@fda.hhs.gov or 301-796-8118

(b)(4),(b)(5),Technical Information-CCI,Testing Data
Records processed under FOIA Request 2011-7650; Released 1/25/12

Questions? Contact FDA/CDRH/OCE/DID at CDRH-FOISTATUS@fda.hhs.gov or 301-796-8118

(b)(4),(b)(5),Technical Information-CCI,Testing Data
Records processed under FOIA Request 2011-7650; Released 1/25/12

Questions? Contact FDA/CDRH/OCE/DID at CDRH-FOISTATUS@fda.hhs.gov or 301-796-8118

(b)(4),(b)(5),Technical Information-CCI,Testing Data
Records processed under FOIA Request 2011-7650; Released 1/25/12

Questions? Contact FDA/CDRH/OCE/DID at CDRH-FOISTATUS@fda.hhs.gov or 301-796-8118

(b)(4),(b)(5),Technical Information-CCI,Testing Data
Records processed under FOIA Request 2011-7650; Released 1/25/12

Questions? Contact FDA/CDRH/OCE/DID at CDRH-FOISTATUS@fda.hhs.gov or 301-796-8118

(b)(4),(b)(5),Technical Information-CCI,Testing Data
Records processed under FOIA Request 2011-7650; Released 1/25/12

Questions? Contact FDA/CDRH/OCE/DID at CDRH-FOISTATUS@fda.hhs.gov or 301-796-8118

(b)(4),(b)(5),Technical Information-CCI,Testing Data
Records processed under FOIA Request 2011-7650; Released 1/25/12

Questions? Contact FDA/CDRH/OCE/DID at CDRH-FOISTATUS@fda.hhs.gov or 301-796-8118

(b)(4),(b)(5),Technical Information-CCI,Testing Data
Records processed under FOIA Request 2011-7650; Released 1/25/12

Questions? Contact FDA/CDRH/OCE/DID at CDRH-FOISTATUS@fda.hhs.gov or 301-796-8118

(b)(4),(b)(5),Technical Information-CCI,Testing Data
Records processed under FOIA Request 2011-7650; Released 1/25/12

Questions? Contact FDA/CDRH/OCE/DID at CDRH-FOISTATUS@fda.hhs.gov or 301-796-8118

(b)(4),(b)(5),Technical Information-CCI,Testing Data
Records processed under FOIA Request 2011-7650; Released 1/25/12

Questions? Contact FDA/CDRH/OCE/DID at CDRH-FOISTATUS@fda.hhs.gov or 301-796-8118

(b)(4),(b)(5),Technical Information-CCI,Testing Data
Records processed under FOIA Request 2011-7650; Released 1/25/12

Questions? Contact FDA/CDRH/OCE/DID at CDRH-FOISTATUS@fda.hhs.gov or 301-796-8118

(b)(4),(b)(5),Technical Information-CCI,Testing Data
Records processed under FOIA Request 2011-7650; Released 1/25/12

Questions? Contact FDA/CDRH/OCE/DID at CDRH-FOISTATUS@fda.hhs.gov or 301-796-8118

(b)(4),(b)(5),Technical Information-CCI,Testing Data
Records processed under FOIA Request 2011-7650; Released 1/25/12

Questions? Contact FDA/CDRH/OCE/DID at CDRH-FOISTATUS@fda.hhs.gov or 301-796-8118

(b)(4),(b)(5),Technical Information-CCI,Testing Data
Records processed under FOIA Request 2011-7650; Released 1/25/12

Questions? Contact FDA/CDRH/OCE/DID at CDRH-FOISTATUS@fda.hhs.gov or 301-796-8118

(b)(4),(b)(5),Technical Information-CCI,Testing Data
Records processed under FOIA Request 2011-7650; Released 1/25/12

Questions? Contact FDA/CDRH/OCE/DID at CDRH-FOISTATUS@fda.hhs.gov or 301-796-8118

(b)(4),(b)(5),Technical Information-CCI,Testing Data
Records processed under FOIA Request 2011-7650; Released 1/25/12

Questions? Contact FDA/CDRH/OCE/DID at CDRH-FOISTATUS@fda.hhs.gov or 301-796-8118

(b)(4),(b)(5),Technical Information-CCI,Testing Data
Records processed under FOIA Request 2011-7650; Released 1/25/12

Questions? Contact FDA/CDRH/OCE/DID at CDRH-FOISTATUS@fda.hhs.gov or 301-796-8118

(b)(4),(b)(5),Technical Information-CCI,Testing Data
Records processed under FOIA Request 2011-7650; Released 1/25/12

Questions? Contact FDA/CDRH/OCE/DID at CDRH-FOISTATUS@fda.hhs.gov or 301-796-8118

(b)(4),(b)(5),Technical Information-CCI,Testing Data
Records processed under FOIA Request 2011-7650; Released 1/25/12

Questions? Contact FDA/CDRH/OCE/DID at CDRH-FOISTATUS@fda.hhs.gov or 301-796-8118

(b)(4),(b)(5),Technical Information-CCI,Testing Data
Records processed under FOIA Request 2011-7650; Released 1/25/12

Questions? Contact FDA/CDRH/OCE/DID at CDRH-FOISTATUS@fda.hhs.gov or 301-796-8118

(b)(4),(b)(5),Technical Information-CCI,Testing Data
Records processed under FOIA Request 2011-7650; Released 1/25/12

Questions? Contact FDA/CDRH/OCE/DID at CDRH-FOISTATUS@fda.hhs.gov or 301-796-8118

(b)(4),(b)(5),Technical Information-CCI,Testing Data
Records processed under FOIA Request 2011-7650; Released 1/25/12

Questions? Contact FDA/CDRH/OCE/DID at CDRH-FOISTATUS@fda.hhs.gov or 301-796-8118

Records processed under FOIA Request 2011-7650; Released 1/25/12

DEPARTMENT OF HEALTH & HUMAN SERVICES

Food and Drug Administration
ODE / DONED / ENTB
WO66 Rm 2574
10903 New Hampshire Avenue
Silver Spring, MD 20993-0002

TO: **The Record**

FROM: Susan Rudy, MSN, CRNP, CORLN, OCN® S. Rudy CRNP
Nurse Consultant and Family Nurse Practitioner, ENTB

DATE: 7/22/2010

RE: **K100577 / S001 Acclarent Inc. Cyclops Multi-angle Endoscope (Model TBD)**
Sterility / Reprocessing / Reuse Review – Traditional 510(k)

RECOMMENDATION: Additional Information is needed

(b)(4),(b)(5)

Questions? Contact FDA/CDRH/OCE/DID at CDRH-FOISTATUS@fda.hhs.gov or 301-796-8118

772

(b)(4),(b)(5),Technical Information-CCI
Records processed under FOIA Request 2011-7650; Released 1/25/12

Questions? Contact FDA/CDRH/OCE/DID at CDRH-FOISTATUS@fda.hhs.gov or 301-796-8118

(b)(4),(b)(5),Technical Information-CCI
Records processed under FOIA Request 2011-7650; Released 1/25/12

Questions? Contact FDA/CDRH/OCE/DID at CDRH-FOISTATUS@fda.hhs.gov or 301-796-8118

(b)(4),(b)(5),Technical Information-CCI
Records processed under FOIA Request 2011-7650; Released 1/25/12

Questions? Contact FDA/CDRH/OCE/DID at CDRH-FOISTATUS@fda.hhs.gov or 301-796-8118

(b)(4),(b)(5),Technical Information-CCI
Records processed under FOIA Request 2011-7650; Released 1/25/12

Questions? Contact FDA/CDRH/OCE/DID at CDRH-FOISTATUS@fda.hhs.gov or 301-796-8118

(b)(4),(b)(5),Technical Information-CCI
Records processed under FOIA Request 2011-7650; Released 1/25/12

Questions? Contact FDA/CDRH/OCE/DID at CDRH-FOISTATUS@fda.hhs.gov or 301-796-8118

(b)(4),(b)(5),Technical Information-CCI
Records processed under FOIA Request 2011-7650; Released 1/25/12

Questions? Contact FDA/CDRH/OCE/DID at CDRH-FOISTATUS@fda.hhs.gov or 301-796-8118

(b)(4),(b)(5),Technical Information-CCI
Records processed under FOIA Request 2011-7650; Released 1/25/12

Questions? Contact FDA/CDRH/OCE/DID at CDRH-FOISTATUS@fda.hhs.gov or 301-796-8118

(b)(4),(b)(5),Technical Information-CCI
Records processed under FOIA Request 2011-7650; Released 1/25/12

Questions? Contact FDA/CDRH/OCE/DID at CDRH-FOISTATUS@fda.hhs.gov or 301-796-8118

(b)(4),(b)(5),Technical Information-CCI
Records processed under FOIA Request 2011-7650; Released 1/25/12

Questions? Contact FDA/CDRH/OCE/DID at CDRH-FOISTATUS@fda.hhs.gov or 301-796-8118

(b)(4),(b)(5),Technical Information-CCI
Records processed under FOIA Request 2011-7650; Released 1/25/12

Questions? Contact FDA/CDRH/OCE/DID at CDRH-FOISTATUS@fda.hhs.gov or 301-796-8118

(b)(4),(b)(5),Technical Information-CCI
Records processed under FOIA Request 2011-7650; Released 1/25/12

Questions? Contact FDA/CDRH/OCE/DID at CDRH-FOISTATUS@fda.hhs.gov or 301-796-8118

(b)(4),(b)(5),Technical Information-CCI
Records processed under FOIA Request 2011-7650; Released 1/25/12

Questions? Contact FDA/CDRH/OCE/DID at CDRH-FOISTATUS@fda.hhs.gov or 301-796-8118

(b)(4),(b)(5),Technical Information-CCI
Records processed under FOIA Request 2011-7650; Released 1/25/12

Questions? Contact FDA/CDRH/OCE/DID at CDRH-FOISTATUS@fda.hhs.gov or 301-796-8118

(b)(4),(b)(5),Technical Information-CCI
Records processed under FOIA Request 2011-7650; Released 1/25/12

Questions? Contact FDA/CDRH/OCE/DID at CDRH-FOISTATUS@fda.hhs.gov or 301-796-8118

(b)(4),(b)(5),Technical Information-CCI
Records processed under FOIA Request 2011-7650; Released 1/25/12

Questions? Contact FDA/CDRH/OCE/DID at CDRH-FOISTATUS@fda.hhs.gov or 301-796-8118

(b)(4),(b)(5),Technical Information-CCI
Records processed under FOIA Request 2011-7650; Released 1/25/12

Questions? Contact FDA/CDRH/OCE/DID at CDRH-FOISTATUS@fda.hhs.gov or 301-796-8118

(b)(4),(b)(5),Technical Information-CCI
Records processed under FOIA Request 2011-7650; Released 1/25/12

Questions? Contact FDA/CDRH/OCE/DID at CDRH-FOISTATUS@fda.hhs.gov or 301-796-8118

(b)(4),(b)(5),Technical Information-CCI
Records processed under FOIA Request 2011-7650; Released 1/25/12

Questions? Contact FDA/CDRH/OCE/DID at CDRH-FOISTATUS@fda.hhs.gov or 301-796-8118

(b)(4),(b)(5),Technical Information-CCI
Records processed under FOIA Request 2011-7650; Released 1/25/12

Questions? Contact FDA/CDRH/OCE/DID at CDRH-FOISTATUS@fda.hhs.gov or 301-796-8118

(b)(4),(b)(5),Technical Information-CCI
Records processed under FOIA Request 2011-7650; Released 1/25/12

Questions? Contact FDA/CDRH/OCE/DID at CDRH-FOISTATUS@fda.hhs.gov or 301-796-8118

(b)(4),(b)(5),Technical Information-CCI
Records processed under FOIA Request 2011-7650; Released 1/25/12

Questions? Contact FDA/CDRH/OCE/DID at CDRH-FOISTATUS@fda.hhs.gov or 301-796-8118

Records processed under FOIA Request 2011-7650; Released 1/25/12

Questions? Contact FDA/CDRH/OCE/DID at CDRH-FOISTATUS@fda.hhs.gov or 301-796-8118

Records processed under FOIA Request 2011-7650; Released 1/25/12

Questions? Contact FDA/CDRH/OCE/DID at CDRH-FOISTATUS@fda.hhs.gov or 301-796-8118

Records processed under FOIA Request 2011-7650; Released 1/25/12

Questions? Contact FDA/CDRH/OCE/DID at CDRH-FOISTATUS@fda.hhs.gov or 301-796-8118

Records processed under FOIA Request 2011-7650; Released 1/25/12

Questions? Contact FDA/CDRH/OCE/DID at CDRH-FOISTATUS@fda.hhs.gov or 301-796-8118

Records processed under FOIA Request 2011-7650; Released 1/25/12

Questions? Contact FDA/CDRH/OCE/DID at CDRH-FOISTATUS@fda.hhs.gov or 301-796-8118

Records processed under FOIA Request 2011-7650; Released 1/25/12

Questions? Contact FDA/CDRH/OCE/DID at CDRH-FOISTATUS@fda.hhs.gov or 301-796-8118

Records processed under FOIA Request 2011-7650; Released 1/25/12

Questions? Contact FDA/CDRH/OCE/DID at CDRH-FOISTATUS@fda.hhs.gov or 301-796-8118

Records processed under FOIA Request 2011-7650; Released 1/25/12

K100577/S001 – Materials Science & Engineering Review

To: Susan F. Rudy, MSN, CRNP, CORLN, OCN
Team Leader, DONED/ENTB

From: Daniel C. Clupper, Ph.D.
Biomedical Engineer, DONED/ENTB

Date: July 19, 2010

Device: Cyclops Multi-Angle Endoscope (Acclarent)

(b)(4),(b)(5)

Questions? Contact FDA/CDRH/OCE/DID at CDRH-FOISTATUS@fda.hhs.gov or 301-796-8118

801

(b)(4),(b)(5),Technical Information-CCI
Records processed under FOIA Request 2011-7650; Released 1/25/12

Questions? Contact FDA/CDRH/OCE/DID at CDRH-FOISTATUS@fda.hhs.gov or 301-796-8118

(b)(4),(b)(5),Technical Information-CCI
Records processed under FOIA Request 2011-7650; Released 1/25/12

Questions? Contact FDA/CDRH/OCE/DID at CDRH-FOISTATUS@fda.hhs.gov or 301-796-8118

(b)(4),(b)(5),Technical Information-CCI
Records processed under FOIA Request 2011-7650; Released 1/25/12

Questions? Contact FDA/CDRH/OCE/DID at CDRH-FOISTATUS@fda.hhs.gov or 301-796-8118

(b)(4),(b)(5),Technical Information-CCI
Records processed under FOIA Request 2011-7650; Released 1/25/12

Questions? Contact FDA/CDRH/OCE/DID at CDRH-FOISTATUS@fda.hhs.gov or 301-796-8118

(b)(4),(b)(5),Technical Information-CCI
Records processed under FOIA Request 2011-7650; Released 1/25/12

Questions? Contact FDA/CDRH/OCE/DID at CDRH-FOISTATUS@fda.hhs.gov or 301-796-8118

(b)(4),(b)(5),Technical Information-CCI
Records processed under FOIA Request 2011-7650; Released 1/25/12

Questions? Contact FDA/CDRH/OCE/DID at CDRH-FOISTATUS@fda.hhs.gov or 301-796-8118

(b)(4),(b)(5),Technical Information-CCI
Records processed under FOIA Request 2011-7650; Released 1/25/12

Questions? Contact FDA/CDRH/OCE/DID at CDRH-FOISTATUS@fda.hhs.gov or 301-796-8118

(b)(4),(b)(5),Technical Information-CCI
Records processed under FOIA Request 2011-7650; Released 1/25/12

Questions? Contact FDA/CDRH/OCE/DID at CDRH-FOISTATUS@fda.hhs.gov or 301-796-8118

(b)(4),(b)(5),Technical Information-CCI
Records processed under FOIA Request 2011-7650; Released 1/25/12

Questions? Contact FDA/CDRH/OCE/DID at CDRH-FOISTATUS@fda.hhs.gov or 301-796-8118

(b)(4),(b)(5),Technical Information-CCI
Records processed under FOIA Request 2011-7650; Released 1/25/12

Questions? Contact FDA/CDRH/OCE/DID at CDRH-FOISTATUS@fda.hhs.gov or 301-796-8118

(b)(4),(b)(5),Technical Information-CCI
Records processed under FOIA Request 2011-7650; Released 1/25/12

Questions? Contact FDA/CDRH/OCE/DID at CDRH-FOISTATUS@fda.hhs.gov or 301-796-8118

(b)(4),(b)(5),Technical Information-CCI
Records processed under FOIA Request 2011-7650; Released 1/25/12

Questions? Contact FDA/CDRH/OCE/DID at CDRH-FOISTATUS@fda.hhs.gov or 301-796-8118

(b)(4),(b)(5),Technical Information-CCI
Records processed under FOIA Request 2011-7650; Released 1/25/12

Questions? Contact FDA/CDRH/OCE/DID at CDRH-FOISTATUS@fda.hhs.gov or 301-796-8118

(b)(4),(b)(5),Technical Information-CCI
Records processed under FOIA Request 2011-7650; Released 1/25/12

Questions? Contact FDA/CDRH/OCE/DID at CDRH-FOISTATUS@fda.hhs.gov or 301-796-8118

(b)(4),(b)(5),Technical Information-CCI
Records processed under FOIA Request 2011-7650; Released 1/25/12

Questions? Contact FDA/CDRH/OCE/DID at CDRH-FOISTATUS@fda.hhs.gov or 301-796-8118

(b)(4),(b)(5),Technical Information-CCI
Records processed under FOIA Request 2011-7650; Released 1/25/12

Questions? Contact FDA/CDRH/OCE/DID at CDRH-FOISTATUS@fda.hhs.gov or 301-796-8118

(b)(4),(b)(5),Technical Information-CCI
Records processed under FOIA Request 2011-7650; Released 1/25/12

Questions? Contact FDA/CDRH/OCE/DID at CDRH-FOISTATUS@fda.hhs.gov or 301-796-8118

(b)(4),(b)(5),Technical Information-CCI
Records processed under FOIA Request 2011-7650; Released 1/25/12

Questions? Contact FDA/CDRH/OCE/DID at CDRH-FOISTATUS@fda.hhs.gov or 301-796-8118

(b)(4),(b)(5),Technical Information-CCI
Records processed under FOIA Request 2011-7650; Released 1/25/12

Questions? Contact FDA/CDRH/OCE/DID at CDRH-FOISTATUS@fda.hhs.gov or 301-796-8118

Records processed under FOIA Request 2011-7650; Released 1/25/12

Food and Drug Administration
Office of Device Evaluation
9200 Corporate Boulevard
Rockville, MD 20850

COVER SHEET MEMORANDUM

From: Reviewer(s) Name(s): Susan Rudy, MSN, CRNP – team leader
Vasant Malshet, Phd, Vasant Dasika, PhD, Daniel Clupper, PhD - Reviewers

Subject: 510(k) Number K100577

To: The Record - It is my recommendation that the subject 510(k) Notification:

Please list CTS decision code : **TH**
☐Refused to accept (see Pre-Review Form, note this is considered the first review cycle).
√Hold (Additional Information or Telephone Hold).
☐Final Decision (SE, SE with Limitations, NSE, Withdrawn, etc.).

Indications for Use Page (Please attach)	√YES	☐NO
510(k) Summary (Please attach)/510(k) Statement	√YES	☐NO
Truthful and Accurate Statement (Must be present for a Final Decision.)	√YES	☐NO
If Class III, does firm include Class III Summary? (Must be present for a Final Decision.)	☐YES	√NA
Does firm reference standards? (If yes, please attach form on H Drive 510k/Boilers.)	√YES	☐NO
Is this a combination product? (Please specify category, see H drive 510k/Boilers algorithm _____)	☐YES	√NO
Is this device intended for pediatric use only?	☐YES	√NO
Is this a prescription device? (If both prescription & OTC, check both boxes.)	√YES	☐NO
Is clinical data necessary to support the review of this 510(k)?	☐YES	√NO
Does this device include an Animal Tissue Source?	☐YES	√NO
Is this device subject to Section 522 Postmarket Surveillance? (Postmarket Surveillance Guidance, http://www.fda.gov/cdrh/osb/guidance/316.html) Contact OSB.	☐YES	√NO
Is this device subject to the Tracking Regulation? (Medical Device Tracking Guidance, http://www.fda.gov/cdrh/comp/guidance/169.html) Contact Compliance.	☐YES	√NO

Regulation Number, Class, Product Code (If unclassified, see 510(k) Staff):
21 CFR 874.4760; Class II; Product code EOB

Additional Product Code(s) (if any):

Review: [signature] ENTB 4/20/2010
(Branch Chief) (Branch Code) (Date)

Final Review: _____
(Division Director) (Date)

829

Questions? Contact FDA/CDRH/OCE/DID at CDRH-FOISTATUS@fda.hhs.gov or 301-796-8118

Records processed under FOIA Request 2011-7650; Released 1/25/12

PRE-REVIEW FORM: COMPANY/DEVICE HISTORY

(b)(4),(b)(5)

828

Questions? Contact FDA/CDRH/OCE/DID at CDRH-FOISTATUS@fda.hhs.gov or 301-796-8118

Screening Checklist for Traditional/Abbreviated Premarket Notification [510(k)] Submissions

Title	Related Information	Present	Missing	N/A
MDUFMA Cover Sheet	Medical Device User Fee Cover Sheet www.fda.gov/oc/mdufma/coversheet.html	√		
CDRH Premarket Review Submission Cover Sheet	CDRH Premarket Review Submission Cover Sheet www.fda.gov/opacom/morechoices/fdaforms/FDA-3514.pdf	√		
510(k) Cover Letter	Appendix A of "Guidance for Industry and FDA Staff Format for Traditional and Abbreviated 510(k)s" dated August 12, 2005	√		
Indications for Use Statement	Device Advice " Content of a 510(k)" Section D www.fda.gov/cdrh/devadvice/314312.html#link_6	√		
510(k) Summary or 510(k) Statement	Device Advice " Content of a 510(k)" Section E www.fda.gov/cdrh/devadvice/314312.html#link_7	√		
Truthful and Accuracy Statement	Device Advice " Content of a 510(k)" Section G www.fda.gov/cdrh/devadvice/314312.html#link_9	√		
Class III Summary and Certification	Class III Summary and Certification Form www.fda.gov/cdrh/manual/stmnciii.html			√
Financial Certification or Disclosure Statement	FORM FDA 3454, Certification: Financial Interests and Arrangements of Clinical Investigators www.fda.gov/opacom/morechoices/fdaforms/FDA-3454.pdf FORM FDA 3455, Disclosure: Financial Interests and Arrangements of Clinical Investigators www.fda.gov/opacom/morechoices/fdaforms/FDA-3455.pdf Financial Disclosure by Clinical Investigators www.fda.gov/oc/guidance/financialdis.html.			√

Records processed under FOIA Request 2011-7650; Released 1/25/12

Title	Related Information	Present	Missing	N/A
Declarations of Conformity and Summary Reports (Abbreviated 510(k)s)	Use of Standards in Substantial Equivalence Determinations www.fda.gov/cdrh/ode/guidance/1131.html. FDA Standards program www.fda.gov/cdrh/stdsprog.html. Declaration of conformity www.fda.gov/cdrh/devadvice/3145.html#link_9 Required Elements for Declaration of Conformity to Recognized Standard www.fda.gov/cdrh/ode/reqrecstand.html		√	
Executive Summary	See section 10 in Chapter II of "Guidance for Industry and FDA Staff Format for Traditional and Abbreviated 510(k)s" dated August 12, 2005	√		
Device Description	See section 11 in Chapter II of "Guidance for Industry and FDA Staff Format for Traditional and Abbreviated 510(k)s" dated August 12, 2005	√ Section 2		
Substantial Equivalence Discussion	Guidance on the CDRH Premarket Notification Review Program 6/30/86 (K86-3), www.fda.gov/cdrh/k863.html	√ Section 3 & Appendix E		
Proposed Labeling	Device Advice " Content of a 510(k)" Section H www.fda.gov/cdrh/devadvice/314312.html#link_10	√ Appendix D		
Sterilization/Shelf Life	Updated 510(k) Sterility Review Guidance (K90-1) www.fda.gov/cdrh/ode/guidance/361.html For reuse of single use devices, see Guidance for Industry and FDA Staff – Medical Device User Fee and Modernization Act of 2002 Validation Data in Premarket Notification Submissions (510(k)s) for Reprocessed Single-Use Medical Devices www.fda.gov/cdrh/ode/guidance/1216.html	√ Section 7 Appendix F & G		
Biocompatibility	FDA Blue Book Memo, G95-1, Use of International Standard ISO-10993, "Biological Evaluation of Medical Devices Part 1: Evaluation and Testing" www.fda.gov/cdrh/g95-1.html	√Section 6		

830

Questions? Contact FDA/CDRH/OCE/DID at CDRH-FOISTATUS@fda.hhs.gov or 301-796-8118

Title	Related Information	Present	Missing	N/A
Software	Guidance for the Content of Premarket Submissions for Software Contained in Medical Devices www.fda.gov/cdrh/ode/software.html			√
Electromagnetic Compatibility/Electrical Safety	CDRH Medical Device Electromagnetic Compatibility Program www.fda.gov/cdrh/emc See also IEC 60601-1- 2 Medical Electrical Equipment -- Part 1: General Requirements for Safety; Electromagnetic Compatibility -- Requirements and Tests (Second Edition, 2001)		√	
Performance Testing – Bench	See section 18 in Chapter II of "Guidance for Industry and FDA Staff Format for Traditional and Abbreviated 510(k)s" dated August 12, 2005	√ Section 5		
Performance Testing – Animal	See section 19 in Chapter II of "Guidance for Industry and FDA Staff Format for Traditional and Abbreviated 510(k)s" dated August 12, 2005			√
Performance Testing – Clinical	See section 20 in Chapter II of "Guidance for Industry and FDA Staff Format for Traditional and Abbreviated 510(k)s" dated August 12, 2005 Certification/Disclosure Forms: Financial Interests and Arrangements of Clinical Investigators www.fda.gov/opacom/morechoices/fdaforms/FDA-3454.pdf www.fda.gov/opacom/morechoices/fdaforms/FDA-3455.pdf			√
Kit Certification	See pages 3-12 and 3-13 in the Premarket Notification [510] Manual and the Convenience Kits Interim Regulatory Guidance http://www.fda.gov/MedicalDevices/Device RegulationandGuidance/GuidanceDocuments/ucm 080216.htm			√

Records processed under FOIA Request 2011-7650; Released 1/25/12

DEPARTMENT OF HEALTH AND HUMAN SERVICES **MEMORANDUM**

Food and Drug Administration
Office of Device Evaluation
9200 Corporate Boulevard
Rockville, MD 20850

Premarket Notification [510(k)] Review
Traditional/Abbreviated
K100577

Date: 4/16/2010
To: The Record
From: Susan Rudy, MSN, CRNP, CORLN

Office: ODE
Division: DONED / ENTB

510(k) Holder: Acclarent, Inc.
Device Name: Acclarent Cyclops Multi-angle Endoscope (Model TBD)
Contact: Keri Yen, Regulatory Affairs Manager
Phone: 650 687 5874
Fax: 680 687 4449
Email: keyn@acclarent.com

I. Purpose

The 510(k) holder would like to introduce the Acclarent Cyclops Multi-angle Endoscope – Model TBD (K100577) into interstate commerce.

II. Administrative Requirements

	Yes	No
Indications for Use page	√	
Truthful and Accuracy Statement	√	
510(k) Summary or 510(k) Statement	√	
Standards Form		√

III. Device Description

	Yes	No
Is the device life-supporting or life sustaining?		√
Is the device implanted (short-term or long-term)?		√
Does the device design use software?		√
Is the device sterile?		√

832

Questions? Contact FDA/CDRH/OCE/DID at CDRH-FOISTATUS@fda.hhs.gov or 301-796-8118

Is the device reusable (not reprocessed single use)? Are "cleaning" instructions included for the end user?	√√	

Summary of Device Description

(b)(4)

(b)(4)

(b)(4)

833

(b)(4),(b)(5),Technical Information-CCI
Records processed under FOIA Request 2011-7650; Released 1/25/12

Questions? Contact FDA/CDRH/OCE/DID at CDRH-FOISTATUS@fda.hhs.gov or 301-796-8118

(b)(4),(b)(5),Technical Information-CCI
Records processed under FOIA Request 2011-7650; Released 1/25/12

Questions? Contact FDA/CDRH/OCE/DID at CDRH-FOISTATUS@fda.hhs.gov or 301-796-8118

(b)(4),(b)(5),Technical Information-CCI
Records processed under FOIA Request 2011-7650; Released 1/25/12

Questions? Contact FDA/CDRH/OCE/DID at CDRH-FOISTATUS@fda.hhs.gov or 301-796-8118

(b)(4),(b)(5),Technical Information-CCI
Records processed under FOIA Request 2011-7650; Released 1/25/12

Questions? Contact FDA/CDRH/OCE/DID at CDRH-FOISTATUS@fda.hhs.gov or 301-796-8118

		Yes	No	
1.	Is Product A Device	√		If **NO** = Stop, see 510(k) staff
2.	Is Device Subject To 510(k)?	√		If **NO** = Stop, see 510(k) staff
3.	Same Indication Statement?	√		If **YES** = Go To 5
4.	Do Differences Alter The Effect Or Raise New Issues of Safety Or Effectiveness?		√	If **YES** = Stop **NSE**
5.	Same Technological Characteristics?		√	If **YES** = Go To 7
6.	Could The New Characteristics Affect Safety Or Effectiveness?	√		If **YES** = Go To 8
7.	Descriptive Characteristics Precise Enough?			If **NO** = Go To 10 If **YES** = Stop **SE**
8.	New Types Of Safety Or Effectiveness Questions?		√	If **YES** = Stop **NSE**
9.	Accepted Scientific Methods Exist?	√		If **NO** = Stop **NSE**
10.	Performance Data Available?		√	If **NO** = Request Data
11.	Data Demonstrate Equivalence?			Final Decision:

(b)(4),(b)(5)

Records processed under FOIA Request 2011-7650; Released 1/25/12

(b)(4),(b)(5)

7.

8.

9.

10.

11.

XIII. Deficiencies – see attached.

XIV. Contact History

3/4/2010 E-mail from Ms. Rudy, FDA to Keri Yen, Acclarent requesting e-copy with e-copy received the same day.

XV. Recommendation – Telephone hold

Regulation (If Unclassified, see 510(k) Staff): 21 CFR 874.4680 "Nasopharyngoscope, Flexible or Rigid"
Classification: Class II
Product Code(s): EOB

Susan Rudy CRNP
Susan F. Rudy, MSN, CRNP, CORLN - Reviewer — 4/20/2010 Date

Branch Chief – Srinivas Nandkumar, Ph.D. — 4/20/2010 Date

839

Questions? Contact FDA/CDRH/OCE/DID at CDRH-FOISTATUS@fda.hhs.gov or 301-796-8118

Rudy, Susan

From: Rudy, Susan
Sent: Tuesday, April 20, 2010 1:58 PM
To: 'Keri Yen'
Cc: Nandkumar, Srinivas
Subject: K100577 Acclarent Cyclops Multi-Angle Endoscope - "Telephone Hold" decision

Importance: High

Attachments: K100577 Acclarent Cyclops AI Letter Final.pdf

K100577
rent Cyclops A

Dear Ms. Yen-

(b)(4),(b)(5)

Thank you for your attention to these matters.

Best regards-

Susan F. Rudy, MSN, CRNP, CORLN, OCN
Nurse Consultant and Family Nurse Practitioner
FDA/CDRH/ODE/DONED
Ear, Nose & Throat Devices Branch
WO66 Rm 2574
10903 New Hampshire Ave.
Silver Spring, MD 20993
T: 301 796 6472
F: 301 827 4601
E: Susan.Rudy@fda.hhs.gov

THIS MESSAGE IS INTENDED ONLY FOR THE USE OF THE PARTY TO WHOM IT IS ADDRESSED AND MAY CONTAIN INFORMATION THAT IS PRIVILEGED, CONFIDENTIAL, AND PROTECTED FROM DISCLOSURE UNDER ..W. If you are not the addressee, or a person authorized to deliver the document to the addressee, you are hereby ..otified that any review disclosure, dissemination, copy or other action based on the content of this communication is not authorized. If you have received this document in error please immediately notify us by e-mail or telephone.

Records processed under FOIA Request 2011-7650; Released 1/25/12

K100577 Acclarent Cyclops Multi-angle Endoscope

Acclarent, Inc.
Ms. Keri Yen, Regulatory Affairs Manager
1525-B O'Brien Drive
Menlo Park, CA 94025
kyen@acclarent.com
Tel: 650 687 5874
FAX: 650 687 4449

Re: K100577
Trade Name: Acclarent Cyclops Multi-Angle Endoscope
Dated: February 26, 2010
Received: March 1, 2010
Date of AI Deficiency Letter: April 20, 2010

Dear Ms. Yen:

(b)(4),(b)(5)

841

(b)(4),(b)(5),Technical Information-CCI
Records processed under FOIA Request 2011-7650; Released 1/25/12

Questions? Contact FDA/CDRH/OCE/DID at CDRH-FOISTATUS@fda.hhs.gov or 301-796-8118

(b)(4),(b)(5),Technical Information-CCI
Records processed under FOIA Request 2011-7650; Released 1/25/12

Questions? Contact FDA/CDRH/OCE/DID at CDRH-FOISTATUS@fda.hhs.gov or 301-796-8118

(b)(4),(b)(5),Technical Information-CCI
Records processed under FOIA Request 2011-7650; Released 1/25/12

Questions? Contact FDA/CDRH/OCE/DID at CDRH-FOISTATUS@fda.hhs.gov or 301-796-8118

(b)(4),(b)(5),Technical Information-CCI
Records processed under FOIA Request 2011-7650; Released 1/25/12

Questions? Contact FDA/CDRH/OCE/DID at CDRH-FOISTATUS@fda.hhs.gov or 301-796-8118

(b)(4),(b)(5),Technical Information-CCI
Records processed under FOIA Request 2011-7650; Released 1/25/12

Questions? Contact FDA/CDRH/OCE/DID at CDRH-FOISTATUS@fda.hhs.gov or 301-796-8118

(b)(4),(b)(5),Technical Information-CCI
Records processed under FOIA Request 2011-7650; Released 1/25/12

Questions? Contact FDA/CDRH/OCE/DID at CDRH-FOISTATUS@fda.hhs.gov or 301-796-8118

(b)(4),(b)(5),Technical Information-CCI
Records processed under FOIA Request 2011-7650; Released 1/25/12

Questions? Contact FDA/CDRH/OCE/DID at CDRH-FOISTATUS@fda.hhs.gov or 301-796-8118

(b)(4),(b)(5),Technical Information-CCI
Records processed under FOIA Request 2011-7650; Released 1/25/12

Questions? Contact FDA/CDRH/OCE/DID at CDRH-FOISTATUS@fda.hhs.gov or 301-796-8118

(b)(4),(b)(5),Technical Information-CCI
Records processed under FOIA Request 2011-7650; Released 1/25/12

Questions? Contact FDA/CDRH/OCE/DID at CDRH-FOISTATUS@fda.hhs.gov or 301-796-8118

Records processed under FOIA Request 2011-7650; Released 1/25/12

(b)(4),(b)(5)

The deficiencies identified above represent the issues that we believe need to be resolved before our review of your 510(k) submission can be successfully completed. In developing the deficiencies, we carefully considered the statutory criteria as defined in Section 513(i) of the Federal Food, Drug, and Cosmetic Act (Act) for determining substantial equivalence of your device.

You may not market this device until you have provided adequate information described above and required by 21 CFR 807.87(l), and you have received a letter from FDA allowing you to do so. If you market the device without conforming to these requirements, you will be in violation of the Act. You may, however, distribute this device for investigational purposes to obtain clinical data if needed to establish substantial equivalence. Clinical investigations of this device must be conducted in accordance with the investigational device exemption (IDE) regulations (21 CFR 812).**If the information, or a request for an extension of time, is not received within 30 days, we will consider your premarket notification to be withdrawn and your submission will be deleted from our system. If you submit the requested information after 30 days it will be considered and processed as a new 510(k)(21 CFR 807.87(l)); therefore, all information previously submitted must be resubmitted so that your new 510(k) is complete. For guidance on 510(k) actions, please see our guidance document entitled, "FDA and Industry Actions on Premarket Notification (510(k)) Submissions: Effect on FDA Review Clock and Performance Assessment" at** http://www.fda.gov/downloads/MedicalDevices/DeviceRegulationandGuidance/GuidanceDocuments/UCM089738.pdf

857

Records processed under FOIA Request 2011-7650; Released 1/25/12

If the submitter does submit a written request for an extension, FDA will permit the 510(k) to remain on hold for up to a maximum of 180 days from the date of the additional information request.

The purpose of this document is to assist agency staff and the device industry in understanding how various FDA and industry actions that may be taken on 510(k)s should affect the review clock for purposes of meeting the Medical Device User Fee and Modernization Act. .

The requested information, or a request for an extension of time, should reference your above 510(k) number and should be submitted in duplicate to:

U.S. Food and Drug Administration
Center for Devices and Radiological Heath
Document Mail Center – WO66-0609
10903 New Hampshire Avenue
Silver Spring, MD 20993-0002

If you have any questions concerning the contents of the letter, please contact Susan Rudy, MSN, CRNP, CORLN at (301) 796-5620. If you need information or assistance concerning the IDE regulations, please contact the Division of Small Manufacturers, International and Consumer Assistance at its toll-free number (800) 638-2041 or at (301) 796-7100, or at its Internet address http://www.fda.gov/MedicalDevices/ResourcesforYou/Industry/default.htm.

Questions? Contact FDA/CDRH/OCE/DID at CDRH-FOISTATUS@fda.hhs.gov or 301-796-8118

(b)(4),(b)(5),Technical Information-CCI
Records processed under FOIA Request 2011-7650; Released 1/25/12

Questions? Contact FDA/CDRH/OCE/DID at CDRH-FOISTATUS@fda.hhs.gov or 301-796-8118

(b)(4),(b)(5),Technical Information-CCI
Records processed under FOIA Request 2011-7650; Released 1/25/12

Questions? Contact FDA/CDRH/OCE/DID at CDRH-FOISTATUS@fda.hhs.gov or 301-796-8118

(b)(4),(b)(5),Technical Information-CCI
Records processed under FOIA Request 2011-7650; Released 1/25/12

Questions? Contact FDA/CDRH/OCE/DID at CDRH-FOISTATUS@fda.hhs.gov or 301-796-8118

(b)(4),(b)(5),Technical Information-CCI
Records processed under FOIA Request 2011-7650; Released 1/25/12

Questions? Contact FDA/CDRH/OCE/DID at CDRH-FOISTATUS@fda.hhs.gov or 301-796-8118

T: 301 796 6472
F: 301 827 4601
E: Susan.Rudy@fda.hhs.gov

Records processed under FOIA Request 2011-7650; Released 1/25/12

Questions? Contact FDA/CDRH/OCE/DID at CDRH-FOISTATUS@fda.hhs.gov or 301-796-8118

Records processed under FOIA Request 2011-7650; Released 1/25/12

Questions? Contact FDA/CDRH/OCE/DID at CDRH-FOISTATUS@fda.hhs.gov or 301-796-8118

Records processed under FOIA Request 2011-7650; Released 1/25/12

Questions? Contact FDA/CDRH/OCE/DID at CDRH-FOISTATUS@fda.hhs.gov or 301-796-8118

Records processed under FOIA Request 2011-7650; Released 1/25/12

Questions? Contact FDA/CDRH/OCE/DID at CDRH-FOISTATUS@fda.hhs.gov or 301-796-8118

Records processed under FOIA Request 2011-7650; Released 1/25/12

Questions? Contact FDA/CDRH/OCE/DID at CDRH-FOISTATUS@fda.hhs.gov or 301-796-8118

Records processed under FOIA Request 2011-7650; Released 1/25/12

Questions? Contact FDA/CDRH/OCE/DID at CDRH-FOISTATUS@fda.hhs.gov or 301-796-8118

Records processed under FOIA Request 2011-7650; Released 1/25/12

Questions? Contact FDA/CDRH/OCE/DID at CDRH-FOISTATUS@fda.hhs.gov or 301-796-8118

Records processed under FOIA Request 2011-7650; Released 1/25/12

Questions? Contact FDA/CDRH/OCE/DID at CDRH-FOISTATUS@fda.hhs.gov or 301-796-8118

Records processed under FOIA Request 2011-7650; Released 1/25/12

Questions? Contact FDA/CDRH/OCE/DID at CDRH-FOISTATUS@fda.hhs.gov or 301-796-8118

Records processed under FOIA Request 2011-7650; Released 1/25/12

Questions? Contact FDA/CDRH/OCE/DID at CDRH-FOISTATUS@fda.hhs.gov or 301-796-8118

Records processed under FOIA Request 2011-7650; Released 1/25/12

DEPARTMENT OF HEALTH & HUMAN SERVICES

Food and Drug Administration
ODE / DONED / ENTB
WO66 Rm 2574
10903 New Hampshire Avenue
Silver Spring, MD 20993-0002

TO: **The Record**

FROM: Susan Rudy, MSN, CRNP, CORLN, OCN® S. Rudy CRNP
Nurse Consultant and Family Nurse Practitioner, ENTB

DATE: 4/16/2010

RE: **K100577 Acclarent Inc. Cyclops Multi-angle Endoscope (Model TBD)**
Sterility / Reprocessing / Reuse Review – Traditional 510(k)

RECOMMENDATION: Additional Information is needed.

(b)(4),(b)(5)

FOI - Page 550 of 1276
Questions? Contact FDA/CDRH/OCE/DID at CDRH-FOISTATUS@fda.hhs.gov or 301-796-8118

869

(b)(4),(b)(5),Technical Information-CCI,Testing Data
Records processed under FOIA Request 2011-7650; Released 1/25/12

Questions? Contact FDA/CDRH/OCE/DID at CDRH-FOISTATUS@fda.hhs.gov or 301-796-8118

(b)(4),(b)(5),Technical Information-CCI,Testing Data
Records processed under FOIA Request 2011-7650; Released 1/25/12

Questions? Contact FDA/CDRH/OCE/DID at CDRH-FOISTATUS@fda.hhs.gov or 301-796-8118

(b)(4),(b)(5),Technical Information-CCI,Testing Data
Records processed under FOIA Request 2011-7650; Released 1/25/12

Questions? Contact FDA/CDRH/OCE/DID at CDRH-FOISTATUS@fda.hhs.gov or 301-796-8118

(b)(4),(b)(5),Technical Information-CCI,Testing Data
Records processed under FOIA Request 2011-7650; Released 1/25/12

Questions? Contact FDA/CDRH/OCE/DID at CDRH-FOISTATUS@fda.hhs.gov or 301-796-8118

(b)(4),(b)(5),Technical Information-CCI,Testing Data
Records processed under FOIA Request 2011-7650; Released 1/25/12

Questions? Contact FDA/CDRH/OCE/DID at CDRH-FOISTATUS@fda.hhs.gov or 301-796-8118

(b)(4),(b)(5),Technical Information-CCI,Testing Data
Records processed under FOIA Request 2011-7650; Released 1/25/12

Questions? Contact FDA/CDRH/OCE/DID at CDRH-FOISTATUS@fda.hhs.gov or 301-796-8118

(b)(4),(b)(5),Technical Information-CCI,Testing Data
Records processed under FOIA Request 2011-7650; Released 1/25/12

Questions? Contact FDA/CDRH/OCE/DID at CDRH-FOISTATUS@fda.hhs.gov or 301-796-8118

(b)(4),(b)(5),Technical Information-CCI,Testing Data
Records processed under FOIA Request 2011-7650; Released 1/25/12

Questions? Contact FDA/CDRH/OCE/DID at CDRH-FOISTATUS@fda.hhs.gov or 301-796-8118

(b)(4),(b)(5),Technical Information-CCI,Testing Data
Records processed under FOIA Request 2011-7650; Released 1/25/12

Questions? Contact FDA/CDRH/OCE/DID at CDRH-FOISTATUS@fda.hhs.gov or 301-796-8118

(b)(4),(b)(5),Technical Information-CCI,Testing Data
Records processed under FOIA Request 2011-7650; Released 1/25/12

Questions? Contact FDA/CDRH/OCE/DID at CDRH-FOISTATUS@fda.hhs.gov or 301-796-8118

(b)(4),(b)(5),Technical Information-CCI,Testing Data
Records processed under FOIA Request 2011-7650; Released 1/25/12

Questions? Contact FDA/CDRH/OCE/DID at CDRH-FOISTATUS@fda.hhs.gov or 301-796-8118

(b)(4),(b)(5),Technical Information-CCI,Testing Data
Records processed under FOIA Request 2011-7650; Released 1/25/12

Questions? Contact FDA/CDRH/OCE/DID at CDRH-FOISTATUS@fda.hhs.gov or 301-796-8118

(b)(4),(b)(5),Technical Information-CCI,Testing Data
Records processed under FOIA Request 2011-7650; Released 1/25/12

Questions? Contact FDA/CDRH/OCE/DID at CDRH-FOISTATUS@fda.hhs.gov or 301-796-8118

(b)(4),(b)(5),Technical Information-CCI,Testing Data
Records processed under FOIA Request 2011-7650; Released 1/25/12

Questions? Contact FDA/CDRH/OCE/DID at CDRH-FOISTATUS@fda.hhs.gov or 301-796-8118

(b)(4),(b)(5),Technical Information-CCI,Testing Data
Records processed under FOIA Request 2011-7650; Released 1/25/12

Questions? Contact FDA/CDRH/OCE/DID at CDRH-FOISTATUS@fda.hhs.gov or 301-796-8118

(b)(4),(b)(5),Technical Information-CCI,Testing Data
Records processed under FOIA Request 2011-7650; Released 1/25/12

Questions? Contact FDA/CDRH/OCE/DID at CDRH-FOISTATUS@fda.hhs.gov or 301-796-8118

(b)(4),(b)(5),Technical Information-CCI,Testing Data
Records processed under FOIA Request 2011-7650; Released 1/25/12

Questions? Contact FDA/CDRH/OCE/DID at CDRH-FOISTATUS@fda.hhs.gov or 301-796-8118

(b)(4),(b)(5),Technical Information-CCI,Testing Data
Records processed under FOIA Request 2011-7650; Released 1/25/12

Questions? Contact FDA/CDRH/OCE/DID at CDRH-FOISTATUS@fda.hhs.gov or 301-796-8118

(b)(4),(b)(5),Technical Information-CCI,Testing Data
Records processed under FOIA Request 2011-7650; Released 1/25/12

Questions? Contact FDA/CDRH/OCE/DID at CDRH-FOISTATUS@fda.hhs.gov or 301-796-8118

(b)(4),(b)(5),Technical Information-CCI,Testing Data
Records processed under FOIA Request 2011-7650; Released 1/25/12

Questions? Contact FDA/CDRH/OCE/DID at CDRH-FOISTATUS@fda.hhs.gov or 301-796-8118

(b)(4),(b)(5),Technical Information-CCI,Testing Data
Records processed under FOIA Request 2011-7650; Released 1/25/12

Questions? Contact FDA/CDRH/OCE/DID at CDRH-FOISTATUS@fda.hhs.gov or 301-796-8118

(b)(4),(b)(5),Technical Information-CCI,Testing Data
Records processed under FOIA Request 2011-7650; Released 1/25/12

Questions? Contact FDA/CDRH/OCE/DID at CDRH-FOISTATUS@fda.hhs.gov or 301-796-8118

(b)(4),(b)(5),Technical Information-CCI,Testing Data
Records processed under FOIA Request 2011-7650; Released 1/25/12

Questions? Contact FDA/CDRH/OCE/DID at CDRH-FOISTATUS@fda.hhs.gov or 301-796-8118

(b)(4),(b)(5),Technical Information-CCI,Testing Data
Records processed under FOIA Request 2011-7650; Released 1/25/12

Questions? Contact FDA/CDRH/OCE/DID at CDRH-FOISTATUS@fda.hhs.gov or 301-796-8118

(b)(4),(b)(5),Technical Information-CCI,Testing Data
Records processed under FOIA Request 2011-7650; Released 1/25/12

Questions? Contact FDA/CDRH/OCE/DID at CDRH-FOISTATUS@fda.hhs.gov or 301-796-8118

(b)(4),(b)(5),Technical Information-CCI,Testing Data
Records processed under FOIA Request 2011-7650; Released 1/25/12

Questions? Contact FDA/CDRH/OCE/DID at CDRH-FOISTATUS@fda.hhs.gov or 301-796-8118

(b)(4),(b)(5),Technical Information-CCI,Testing Data
Records processed under FOIA Request 2011-7650; Released 1/25/12

Questions? Contact FDA/CDRH/OCE/DID at CDRH-FOISTATUS@fda.hhs.gov or 301-796-8118

(b)(4),(b)(5),Technical Information-CCI,Testing Data
Records processed under FOIA Request 2011-7650; Released 1/25/12

Questions? Contact FDA/CDRH/OCE/DID at CDRH-FOISTATUS@fda.hhs.gov or 301-796-8118

(b)(4),(b)(5),Technical Information-CCI,Testing Data
Records processed under FOIA Request 2011-7650; Released 1/25/12

Questions? Contact FDA/CDRH/OCE/DID at CDRH-FOISTATUS@fda.hhs.gov or 301-796-8118

(b)(4),(b)(5),Technical Information-CCI,Testing Data
Records processed under FOIA Request 2011-7650; Released 1/25/12

Questions? Contact FDA/CDRH/OCE/DID at CDRH-FOISTATUS@fda.hhs.gov or 301-796-8118

(b)(4),(b)(5),Technical Information-CCI,Testing Data
Records processed under FOIA Request 2011-7650; Released 1/25/12

Questions? Contact FDA/CDRH/OCE/DID at CDRH-FOISTATUS@fda.hhs.gov or 301-796-8118

(b)(4),(b)(5),Technical Information-CCI,Testing Data
Records processed under FOIA Request 2011-7650; Released 1/25/12

Questions? Contact FDA/CDRH/OCE/DID at CDRH-FOISTATUS@fda.hhs.gov or 301-796-8118

(b)(4),(b)(5),Technical Information-CCI,Testing Data
Records processed under FOIA Request 2011-7650; Released 1/25/12

Questions? Contact FDA/CDRH/OCE/DID at CDRH-FOISTATUS@fda.hhs.gov or 301-796-8118

(b)(4),(b)(5),Technical Information-CCI,Testing Data
Records processed under FOIA Request 2011-7650; Released 1/25/12

Questions? Contact FDA/CDRH/OCE/DID at CDRH-FOISTATUS@fda.hhs.gov or 301-796-8118

Records processed under FOIA Request 2011-7650; Released 1/25/12

US 20100022838A1

(19) United States

(12) Patent Application Publication

Hoeg

(10) Pub. No.: US 2010/0022838 A1

(43) Pub. Date: Jan. 28, 2010

(54) SWING PRISM ENDOSCOPE

(76) Inventor: Hans David Hoeg, Arcadia, CA (US)

Correspondence Address:
ST. ONGE STEWARD JOHNSTON & REENS, LLC
986 BEDFORD STREET
STAMFORD, CT 06905-5619 (US)

(21) Appl. No.: 12/180,138

(22) Filed: Jul. 25, 2008

Publication Classification

(51) Int. Cl.
A61B 1/04 (2006.01)
A61B 1/06 (2006.01)

(52) U.S. Cl. 600/131; 600/167

(57) ABSTRACT

A swing prism endoscope with an actuating mechanism that comprises a control element that oscillates in between proximal and distal ends of the endoscope and is coupled to a distally mounted swing prism, a control surface with a variable profile, and an engaging element that contacts the control surface and moves relative to the control surface while contacting the control surface causing the control element to oscillate. The distally mounted swing prism that alters the viewing angle of the endoscope between a forward direction that is substantially parallel to the longitudinal axis of the endoscope and a side direction that is angled relative to the longitudinal axis of the endoscope.

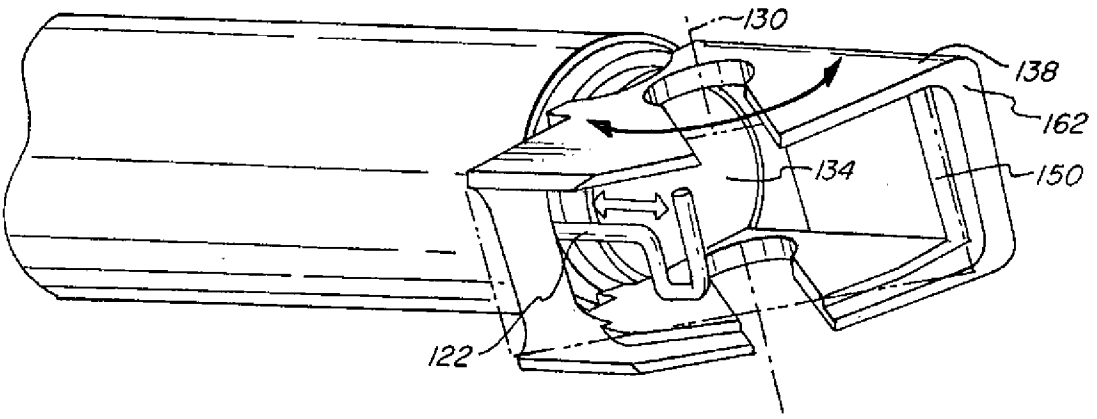

904

Questions? Contact FDA/CDRH/OCE/DID at CDRH-FOISTATUS@fda.hhs.gov or 301-796-8118

Records processed under FOIA Request 2011-7650; Released 1/25/12

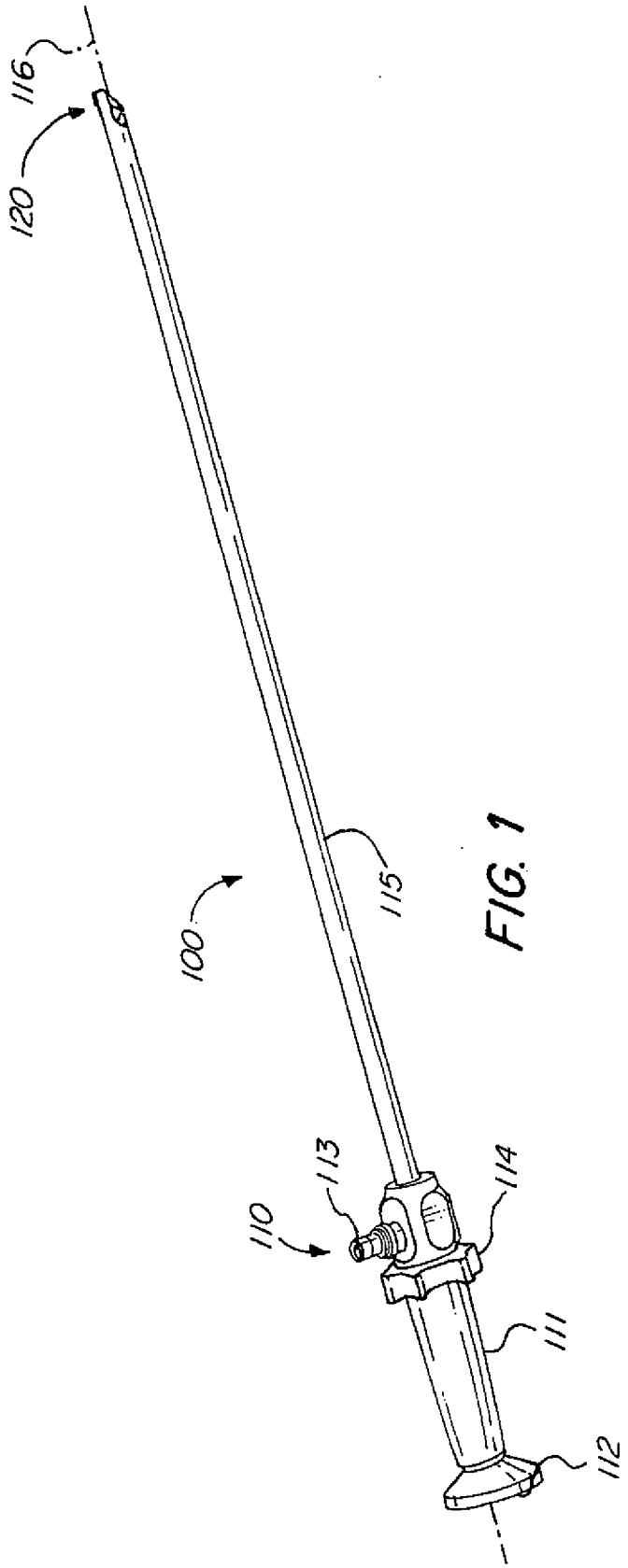

FIG. 1

Records processed under FOIA Request 2011-7650; Released 1/25/12

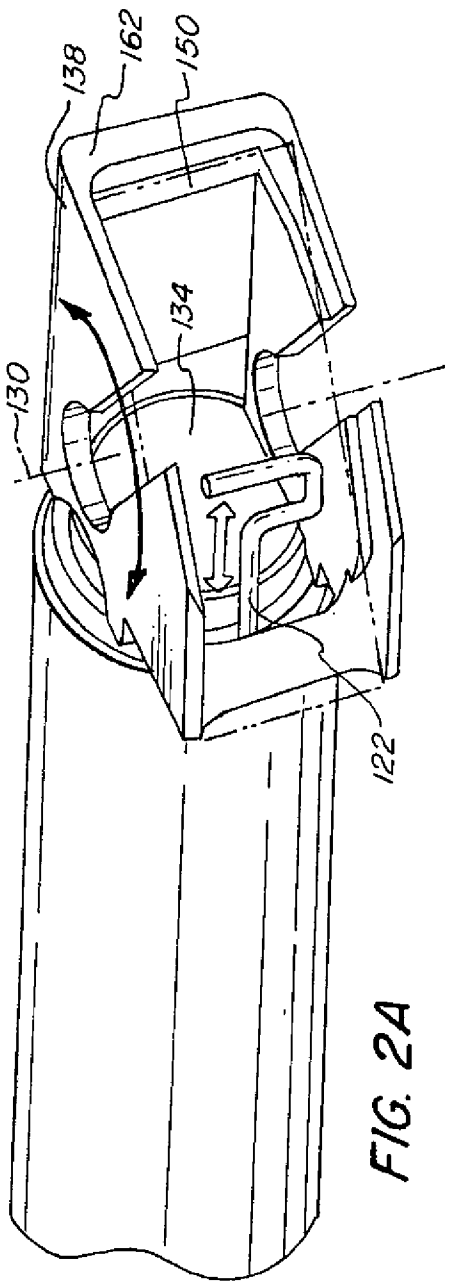

FIG. 2A

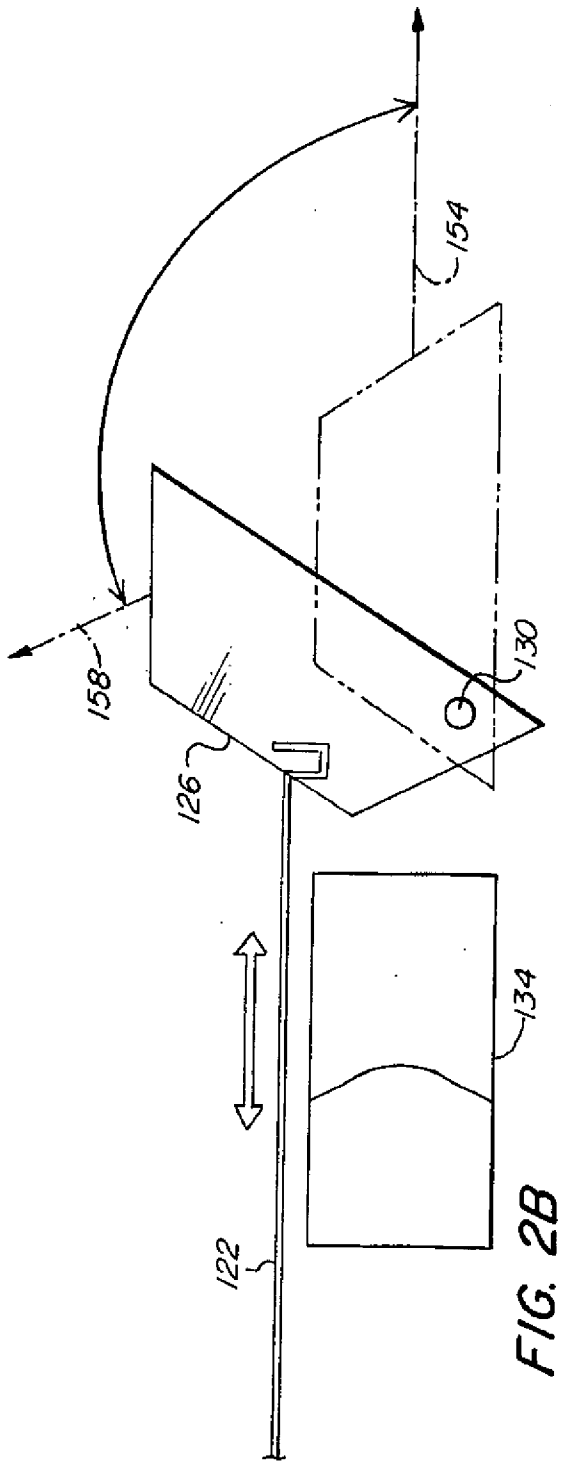

FIG. 2B

Questions? Contact FDA/CDRH/OCE/DID at CDRH-FOISTATUS@fda.hhs.gov or 301-796-8118

906

Records processed under FOIA Request 2011-7650; Released 1/25/12

SWING PRISM ENDOSCOPE

FIELD OF THE INVENTION

[0001] The present invention relates to variable direction of view endoscopes, in particular, rigid shaft endoscopes with swing prisms mounted at the distal end.

BACKGROUND OF THE INVENTION

[0002] Variable direction of view endoscopes allow the user to change the endoscopic viewing direction without having to change the position of the endoscope itself. Variable direction of view endoscopes come in two general classes: rigid and flexible. Such endoscopes are useful when the user wants to see structures which are beside or behind the tip of the endoscope but can not easily move the endoscope shaft because of anatomical constraints or constraints imposed by other surgical instruments in the operative field.

[0003] Variable direction endoscopy is desirable because it affords surgeons greater flexibility in their procedural approach. Increased viewing mobility improves the quality of diagnoses, as in cystoscopy for example, where a typical diagnostic screening involves inspecting the interior surface of the bladder for lesions or tumors. The ability to look laterally and retrograde is important when doing this type of diagnosis because it makes it possible to visually cover the entire bladder surface, including the entrance region near the bladder neck. In ear-nose-throat and neurosurgical procedures, variable viewing is desired because the procedures are delicate, and the entrance ports are small. It is therefore not possible to manipulate the endoscope significantly without injuring the patient. The ability to look sideways and backwards is important however during and after tumor resection when it is necessary to keep track of tumor fragments, which if not caught can nucleate new tumors. Laparoscopy, another surgical discipline, imposes fewer maneuvering constraints but still benefits markedly from variable direction viewing because it allows surgeons to get better observation angles during a procedure and increases diagnostic capabilities. Also, because of the greater viewing versatility, variable direction of view endoscopes can minimize conflicts with other tools and can simplify surgical planning by their ability to achieve standard viewing angles from nonstandard positions, allowing the surgeon to keep the endoscope "off to the side" but still get the desired view.

[0004] A fundamental feature of variable direction endoscopy is that it generally makes it possible for surgeons to eliminate "blind movements." A blind movement is the process of moving an instrument inside a patient without being able to see where the instrument is heading. This can occur when it is necessary to advance a fixed-angle side viewing endoscope in its length direction without being able to see what is ahead of the scope, or when a surgical tool has to be manipulated at the boundary of the endoscopic field of view.

[0005] Generally, rigid scopes are easier for surgeons to control than flexible scopes. This is because there is a rigid connection between the tip of the endoscope and the surgeon's hand. When the surgeon moves her hand, the movement of the proximal end of the scope translates directly to the distal end of the scope, and it is easy for the user to develop a mental picture of how the scope tip moves based on her hand movement. This is not true of flexible endoscopes where the dynamic relationship between the distal and proximal ends of the scope is not always obvious. For this reason, use of flexible endoscopes often requires substantial training, and therefore many surgeons prefer rigid scopes if the situation permits.

[0006] Rigid and flexible scopes are typically designed for different applications, and they are not interchangeable. While flexible scopes have been widely adopted in the medical marketplace, rigid variable direction of view scopes have yet to establish themselves. A number of rigid variable direction of view endoscopes have been presented over the years, all with the goal of providing the surgeon with improved viewing mobility over traditional fixed-angle endoscopes. They have achieved this goal, but unfortunately their drawbacks have outweighed their advantages. For a given diameter the image quality delivered by a rigid variable direction of view endoscope is generally not as good as that delivered by a fixed-angle endoscope because some of the optical channel must be sacrificed in favor of the actuation mechanism, which also limits the field of view. The actuation mechanism adds complexity and cost to the design, manufacturing and assembly processes. The added mechanical complexity in turn reduces robustness and makes sterilization more difficult. Further, making variable direction of view endoscopes ergonomic and user-friendly is challenging. In several surgical disciplines, especially laparoscopy, it is necessary for the surgeon to be able to hold the endoscope flat across the patient's body in order to access certain parts of the anatomy. This practice requires that the endoscope have a minimal handle which is generally symmetric about the main axis of the endoscope. Therefore, gun-grip type handles are not suitable for surgical applications.

[0007] Another significant problem with current variable direction of view endoscopes (flexible or rigid with flex tip) is disorientation. As the endoscopic line of sight is changed, the user faces two difficulties. The first is keeping track of where the endoscope is "looking." With a rigid fixed-angle endoscope it is relatively easy for the user to extrapolate the endoscopic viewing direction from the position of the endoscope shaft. This is not the case when the viewing direction is regularly changed relative to the longitudinal axis of the endoscope; the user quickly loses track of spatial orientation within the anatomy being observed. The second difficulty is keeping track of what is "up" in the endoscopic image. Depending on the view-changing mechanism, the image will rotate relative to the surroundings, and the user frequently loses orientation. This disorientation is often not correctable, especially in variable direction of view scopes which have distal imagers and no facility for changing image orientation.

[0008] Given the difficulties of variable direction endoscopes, it is common for surgeons to utilize rigid endoscopes with fixed viewing angles. Surgeons rely heavily on knowing that a certain endoscope provides a 30 or 45 degree viewing angle. This preference for using multiple fixed angle endoscopes is due in part to the fact that a surgeon knows that for a particular endoscope they can dependably know what the anatomy should look like.

[0009] What is desired, therefore, is a variable direction of view endoscope with an actuation mechanism that reduces the complexity and cost of the device while also providing a device that is robust and provides for ease of sterilization. What is further desired is an actuation mechanism that minimizes the amount of optical channel that is sacrificed for the mechanism. What is also desired is a variable view endoscope that is ergonomic to improve the handling and ease of use of the device. What is still further desired is a variable view

907

Questions? Contact FDA/CDRH/OCE/DID at CDRH-FOISTATUS@fda.hhs.gov or 301-796-8118

Records processed under FOIA Request 2011-7650; Released 1/25/12

endoscope that assists the surgeon in maintaining spatial orientation when altering the viewing angle.

SUMMARY OF THE INVENTION

[0010] Accordingly, it is an object of the present invention to provide a swing prism endoscope with a control element that oscillates in between proximal and distal ends of the endoscope and is coupled to a distally mounted swing prism such that the oscillation of the control element induces the swing prism to rotate about a prism axis, a control surface with a variable profile, and an engaging element that contacts the control surface and moves relative to the control surface while contacting the control surface causing the control element to oscillate. The engaging element can be formed on a drive element that rotates about a longitudinal axis of the endoscope. Alternatively, the control surface can be formed on a drive element that rotates about a longitudinal axis of the endoscope.

[0011] It is another object of the invention for the variable profile of the control surface to comprise a peak that corresponds to a maximum viewing angle of the swing prism and a trough that corresponds to a minimum viewing angle of the swing prism.

[0012] It is a further object of the invention for the engaging element or control surface to be magnetically coupled to a prism adjusting knob, the movement of which induces a corresponding movement of either the engaging element or control surface. The prism adjusting knob can be radially disposed above the engaging element or the control surface and rotate about the longitudinal axis of the endoscope.

[0013] It is yet another object of the invention for the endoscope to comprise a handle that also encompasses the longitudinal axis of the endoscope and is adjacent to the prism adjusting knob such that the endoscope can be grasped and the prism adjusting knob rotated with a single hand.

[0014] It is further object of the invention for the rotation of the prism adjusting knob to have a 1:1 correspondence to the change of the viewing angle of the swing prism.

[0015] It is also beneficial if the endoscope comprises at least one preset viewing angle such that when the prism adjusting knob is rotated to the preset viewing angle, the prism adjusting knob is secured at that location. In one embodiment, the prism adjusting knob comprises an orientation element that extends along the longitudinal axis of the endoscope and engages a portion of the endoscope that encompasses the longitudinal axis of the endoscope and comprises a receiving element at the present viewing angle that receives and secures the orientation element at that location.

[0016] It is still a further object of the invention for the endoscope to comprise a distally mounted swing prism that alters the viewing angle of the endoscope between a forward direction that is substantially parallel to the longitudinal axis of the endoscope and a side direction that is angled relative to the longitudinal axis of the endoscope. When the swing prism is oriented with a viewing angle in the forward direction, the swing prism conveys a light image to transmittal optics or a solid state imager without substantially altering the image direction. When the swing prism is oriented with a viewing angle in the side direction, the swing prism reflects a light image to transmittal optics or a solid state imager by altering the image direction from a first direction to a second direction. In a preferred embodiment, the swing prism is a dove prism.

[0017] It is yet another object of the invention for the swing prism to be disposed within a housing that comprises a viewing window that spans the forward and side view angles. It is preferred that the portion of the viewing window that spans the forward and side view angles comprises a spherical arc.

[0018] Other objects of the invention and its particular features and advantages will become more apparent from consideration of the following drawings and accompanying description.

BRIEF DESCRIPTION OF THE DRAWINGS

[0019] FIG. 1 is a perspective view of the swing prism endoscope of the present invention.

[0020] FIG. 2A is a perspective view of the distal end of the swing prism endoscope of the present invention with the distal portion of the outer housing removed.

[0021] FIG. 2B is a schematic view of the distal end of the swing prism endoscope of the present invention depicting a swing prism, transmittal optics, and an activating wire.

[0022] FIG. 3A is a side view of the proximal end of the swing prism endoscope of the present invention.

[0023] FIG. 3B is a side view of the proximal end of the swing prism endoscope of the present invention with the portion of the endoscope forming the handle removed.

[0024] FIG. 3C is another side view of the proximal end of the swing prism endoscope of the present invention with the portion of the endoscope forming the handle removed.

[0025] FIG. 3D is another side view of the proximal end of the swing prism endoscope of the present invention with the portion of the endoscope forming the handle removed.

DETAILED DESCRIPTION OF THE INVENTION

[0026] The following detailed description illustrates the invention by way of example, not by way of limitation of the principles of the invention. This description will enable one skilled in the art to make and use the invention, and describes several embodiments, adaptations, variations, alternatives and uses of the invention, including what is presently believed to be the best mode of carrying out the invention.

[0027] FIG. 1 illustrates a variable direction of view endoscope **100** with a rigid shaft **115** extending from a proximal end **110** to a distal end **120**. Endoscope **100** comprises a central axis **116** that is encompassed by the components of the endoscope. When the distal end **120** is inserted in to a body cavity, light source adapter **113** conveys light from the proximal end **110** to the distal end **120** of the endoscope enabling light to be projected in to the cavity from the distal end. The distal end **120** comprises a swing prism that rotates about a prism axis and receives an image of the cavity. Optical components in rigid shaft **115** convey the image from the distal end **120** to the proximal end **110**. To view the image received by the swing prism, a surgeon secures endoscope **100** by grasping handle **111**, which encompasses central axis **116**, and views the cavity through eye piece **112**. Alternatively, a camera, known to one skilled in the art, can be attached to eye piece **112** or replace eye piece **112**, such that the cavity can be viewed on a video monitor.

[0028] Since the swing prism rotates about a prism axis, the surgeon is able to change the viewing angle of the endoscope without altering the orientation of the endoscope within the body cavity. While grasping handle **111**, the surgeon is able to use the same hand to rotate prism adjusting knob **114** about central axis **116**, which in turn induces the swing prism to

908

Questions? Contact FDA/CDRH/OCE/DID at CDRH-FOISTATUS@fda.hhs.gov or 301-796-8118

Records processed under FOIA Request 2011-7650; Released 1/25/12

rotate about the prism axis and changes the angle that the swing prism receives a light image relative to the axis **116** of endoscope **110**. Manipulation of the swing prism with one hand is facilitated by the fact that the handle **111** and prism adjusting knob **114** are disposed adjacent to one another and both encompass central axis **116**. By disposing the handle and adjusting knob about the axis of the endoscope and placing these elements adjacent to one another, the endoscope provides an improved ergonomic device that eases the use of the endoscope by a surgeon.

[0029] FIGS. **2**A and B provide a more detailed view of the distal end **120** of endoscope **100**. As shown in these figures, the rotation of dove prism **126** about prism axis **130** is induced by a wire **122** that is coupled to the prism. Wire **122** extends from the proximal end **110** to the distal end **120** and is coupled to prism adjusting knob **114** in a manner discussed in more detail below. The rotation of prism adjusting knob **114** induces wire **122** to move in the proximal or distal directions and consequently cause the dove prism **126** to rotate about the prism axis **130**.

[0030] In the particular embodiment shown in FIGS. **2**A and B, dove prism **126** is able to rotate the viewing angle between zero degrees **154** in the forward direction and 120 degrees **158** in the side direction relative to central axis **116**. Dove prism **126** is characterized by the fact that when oriented at zero degrees **154**, dove prism **126** does not alter the course of the image, such that the image is transmitted straight through the prism **126** to transmittal optics **134**. When dove prism **126** is oriented in the side direction, the prism alters the course of the image towards transmittal optics **134** enabling side views to be transmitted to the eye piece **112**. Alternatively, a solid state imager, such as a CCD or CMOS imager, can replace or be integrated with the transmittal optics. In such an embodiment, the imaging surface of the solid state imager can be placed at the distal end and oriented normal to the central axis of the endoscope. The imaging surface can either receive an image from the transmittal optics or directly from the dove prism. A dove prism is beneficial because it provides a simplified mechanism for directing an image to transmittal optics, i.e. it can illuminate the need to provide multiple mirrors or prisms for redirecting an image. As a result, the simplified mechanism enables the diameter of the distal end of the endoscope to be reduced. The dove prism is also beneficial because a single prism can facilitate viewing in the forward, side and backward directions (>90 degrees).

[0031] To enable dove prism **126** to be secured within endoscope **100**, distal housing **138** is provided at distal end **120** adjacent to transmittal optics **134** and incorporates a cavity that receives dove prism **126**. Distal housing **138** is characterized by a curved surface **162**, which can be in the form of a spherical arc (i.e. the section of a sphere), and a ledge **150** that receives a corresponding curved viewing window, not shown, which can also be in the form of a spherical arc. When the viewing window is spherically shaped, the optical properties of the endoscope are enhanced, enabling the endoscope to maintain high image quality throughout viewing range of swing prism **126**. At least a portion of the curved viewing window is shaped such that the length, width and contour of the window correspond to the dimensions of ledge **150** and the portion of the curved window is encompassed by the portion of the housing **138** forming curved surface **162**. By disposing viewing window on ledge **150**, curved surface **162** can protect the viewing window from impacts that might otherwise damage the window.

[0032] In general, the manner in which adjusting knob **114** induces wire **122** to oscillate is achieved by coupling the wire to a control element that oscillates between the forward and backward direction, i.e. the control element oscillates in the direction of the proximal and distal ends of endoscope **100**. While the control element oscillates, the control element maintains its orientation relative to a longitudinal axis of the endoscope by not rotating while oscillating. Endoscope **100** further incorporates a variable surface and an engaging element. The variable surface has a profile that varies from the lateral perspective of endoscope **100**, i.e. a portion of the variable surface extends in the distal direction. The engaging element contacts the variable surface and slides along the variable surface. In one embodiment, the variable surface can be maintained in a static orientation relative to the longitudinal axis while the engaging element moves relative to the variable surface. In another embodiment, the engaging element is maintained in a static orientation relative to the longitudinal axis while the variable surface moves relative to the engaging element. In either case, during the relative motion of these components to each other, the movement of the control element in the proximal direction is caused by the engaging element moving towards the portion of the variable surface extending towards the distal direction. The movement of the control element in the distal direction is caused by the engaging element moving away from the portion of the variable surface extending towards the distal direction. These elements provide an improved actuating mechanism for changing the viewing angle of an endoscope. This two element construction reduces the complexity of typical actuating mechanisms and enables the actuating mechanisms to provide predictable adjustments such that disorientation by a surgeon can be avoided.

[0033] FIGS. 3A-D depict a preferred embodiment of the mechanism by which the view angle of a swing prism is adjusted. Disposed within handle **111** is a control element **210** that encompasses the longitudinal axis of endoscope **100**. Control element **210** comprises a variable surface **211** that is oriented towards the distal end of endoscope **100**. The profile of variable surface **211** changes from the lateral perspective of endoscope **100** such that variable surface **211** comprises a trough portion **212** and a peak portion **213**, which extends in the distal direction. A sloped transition region **214** extends from trough portion **212** to peak portion **213**. Also disposed within handle **111** and opposite variable surface **211** is drive element **220**, which also encompasses the longitudinal axis of endoscope **100** and rotates about this axis. Drive element **220** comprises an engaging element **221**, which extends from drive element **220** in the proximal direction along the longitudinal axis and contacts variable surface **211**. Encompassing drive element **220** is prism adjusting knob **230**, which also rotates about the longitudinal axis. Prism adjusting knob **230** and drive element **220** are magnetically coupled, i.e. either the prism adjusting knob **230** or the drive element **220** contain a magnetic element such that the rotation of the prism adjusting knob **230** by a surgeon causes the drive element **220** to rotate in the same direction. Because of this magnetic coupling, the endoscope can be sealed and the knob kept completely external, allowing simpler cleaning and sterilization.

[0034] Contacting the proximal surface of control element **210** is spring **240**. Spring **240** resides between control element **210** and spring retaining element **241**. Spring **240** forces variable surface **211** against engaging element **221** ensuring

Questions? Contact FDA/CDRH/OCE/DID at CDRH-FOISTATUS@fda.hhs.gov or 301-796-8118

Records processed under FOIA Request 2011-7650; Released 1/25/12

that engaging element **221** remains in contact with variable surface **211** as the engaging element moves along variable surface **211**.

[0035] In operation, a surgeon rotates prism adjusting knob **230** either clockwise or counter clockwise. The magnetic coupling of the prism adjusting knob **230** to the drive element **220** causes the drive element **220** to rotate in the same manner. The rotation of the drive element **220** causes the engaging element **221** to slide along variable surface **211**. When the engaging element **221** slides towards peak portion **213**, the control element **210** is displaced in the proximal direction. When the engaging element **221** slides towards trough portion **212**, the control element is drawn towards the distal direction. While the drive element **220** rotates, the control element maintains its orientation relative to the longitudinal axis.

[0036] In order to improve the ability of a surgeon to accurately adjust the viewing angle of the swing prism, it is preferable that the rotation of the adjusting knob **230** have a 1:1 correspondence with the change in the viewing angle of the prism, i.e. when the knob is rotated 30 degrees, the viewing angle of the swing prism is changed 30 degrees. This can be achieved by choosing the appropriate combination of prism reflectance angle and the slope of the sloped transition region **214**. The surgeon's manipulation of the swing prism can further be enhanced by the use of indicia on endoscope **100** that will inform the surgeon of the current view angle of the prism. For instance, FIG. **3B** illustrates a mechanism by which the surgeon can determine if the prism is disposed in standard preset position. In this embodiment, a portion of the housing of endoscope **100** comprises pairs of dimples **234** that are adjacent to adjusting knob **230** and are positioned about the longitudinal axis **116** at standard endoscopic viewing angles, such as 0, 30, 45, 70, 90, or 120 degrees. A rod **232** is coupled to adjusting knob **230** and extends in the distal direction over the portion of the housing comprising dimples **234**. As the adjusting knob **230** rotates to change the prism viewing angle, the rod **232** rotates over the housing surface. When the rod **232** is positioned over a standard viewing angle, the rod is received and secured between a pair of dimples. The use of dimples **234** enables a surgeon to visually and through feel determine when the swing prism is positioned at a standard viewing angle. Alternatively, dimples **234** can be replaced by dents that recede into the surface of the housing and receive rod **232**. The advantage of preset positions is that a surgeon can have the viewing angle set to a preset position and feel comfortable that the endoscopic viewing angle is exactly at a desired angle, such as 30 degrees. As noted above, surgeons rely heavily on knowing that a certain endoscope is a "30" or a "45", and they know what the anatomy should look like given a certain scope. The present endoscope provides surgeons with the simplicity of a single endoscope with variable direction of view and at the same time enables the surgeon to be certain of the viewing angle that the endoscope is set to.

[0037] The present invention has been described above in terms of a presently preferred embodiment so that an understanding of the present invention can be conveyed. However, many alternative designs and structural arrangements are possible without departing from the principle of the invention. The scope of the present invention should therefore not be limited by the embodiments illustrated, but rather it should be understood that the present invention has wide applicability with respect to multi-directional viewing instruments. All modifications, variations, or equivalent elements and implementations that are within the scope of the appended claims should therefore be considered within the scope of the invention.

What is claimed is:

1. A swing prism endoscope, comprising:

a control element that oscillates in between proximal and distal ends of the endoscope and is coupled to a distally mounted swing prism such that the oscillation of the control element induces the swing prism to rotate about a prism axis, wherein the control element maintains its orientation relative to a longitudinal axis of the endoscope during oscillation;

a control surface with a variable profile; and

an engaging element that contacts the control surface and moves relative to the control surface while contacting the control surface causing the control element to oscillate.

2. The swing prism endoscope of claim **1**, wherein the engaging element is formed on a drive element that rotates about a longitudinal axis of the endoscope.

3. The swing prism endoscope of claim **1**, wherein the control surface is formed on a drive element that rotates about a longitudinal axis of the endoscope.

4. The swing prism endoscope of claim **1**, wherein the variable profile of the control surface comprises a peak that corresponds to a maximum viewing angle of the swing prism and a trough that corresponds to a minimum viewing angle of the swing prism.

5. The swing prism endoscope of claim **1**, wherein either the engaging element or control surface are magnetically coupled to a prism adjusting knob, the movement of which induces a corresponding movement of either the engaging element or control surface.

6. The swing prism endoscope of claim **5**, wherein the prism adjusting knob is radially disposed above the engaging element or the control surface and rotates about the longitudinal axis of the endoscope.

7. The swing prism endoscope of claim **6**, further comprising a handle that encompasses the longitudinal axis of the endoscope that is adjacent to the prism adjusting knob such that the endoscope can be grasped and the prism adjusting knob rotated with a single hand.

8. The swing prism endoscope of claim **1**, further comprising a spring mechanism that engages the control element and forces the control surface to contact the engaging element.

9. The swing prism endoscope of claim **1**, further comprising a prism adjusting knob, the rotation of which induces a corresponding rotation of either the engaging element or control surface, wherein the rotation of the knob has a 1:1 correspondence to the change of the viewing angle of the swing prism.

10. The swing prism endoscope of claim **9**, wherein the endoscope comprises at least one preset viewing angle such that when the prism adjusting knob is rotated to the preset viewing angle, the prism adjusting knob is secured at that location.

11. The swing prism endoscope of claim **10**, wherein the prism adjusting knob comprises an orientation element that extends along the longitudinal axis of the endoscope and engages a portion of the endoscope that encompasses the longitudinal axis of the endoscope and comprises a receiving element at the present viewing angle that receives and secures the orientation element at that location.

910

Questions? Contact FDA/CDRH/OCE/DID at CDRH-FOISTATUS@fda.hhs.gov or 301-796-8118

Records processed under FOIA Request 2011-7650; Released 1/25/12

12. The swing prism endoscope of claim 1, wherein the rotation of the swing prism alters the viewing angle of endoscope between forward and side directions.

13. The swing prism endoscope of claim 12, wherein when the swing prism is oriented with a viewing angle in the forward direction, the swing prism conveys a light image to transmittal optics or a solid state imager without substantially altering the image direction.

14. The swing prism endoscope of claim 13, wherein when the swing prism is oriented with a viewing angle in the side direction, the swing prism reflects a light image to transmittal optics or a solid state imager by altering the image direction from a first direction to a second direction.

15. The swing prism endoscope of claim 14, wherein the swing prism is a dove prism.

16. The swing prism endoscope of claim 12, wherein the swing prism is disposed within a housing that comprises a viewing window that spans the forward and side view angles.

17. The swing prism endoscope of claim 16, wherein the portion of the viewing window that spans the forward and side view angles comprises a spherical arc.

18. A swing prism endoscope, comprising:

a distally mounted swing prism that alters the viewing angle of the endoscope between a forward direction that is substantially parallel to the longitudinal axis of the endoscope and a side direction that is angled relative to the longitudinal axis of the endoscope; and

an actuating mechanism at a proximal end of the endoscope that is coupled to the swing prism such that the actuating mechanism induces the swing prism to rotate about a prism axis.

19. The swing prism endoscope of claim 18, wherein when the swing prism is oriented with a viewing angle in the forward direction, the swing prism conveys a light image to transmittal optics or a solid state imager without substantially altering the image direction.

20. The swing prism endoscope of claim 19, wherein when the swing prism is oriented with a viewing angle in the side direction, the swing prism reflects a light image to transmittal optics or a solid state imager by altering the image direction from a first direction to a second direction.

21. The swing prism endoscope of claim 20, wherein the swing prism is a dove prism.

22. The swing prism endoscope of claim 20, wherein the swing prism is disposed within a housing that comprises a viewing window that spans the forward and side view angles.

23. The swing prism endoscope of claim 22, wherein the portion of the viewing window that spans the forward and side view angles comprises a spherical arc.

* * * * *

Questions? Contact FDA/CDRH/OCE/DID at CDRH-FOISTATUS@fda.hhs.gov or 301-796-8118

911

Records processed under FOIA Request 2011-7650; Released 1/25/12

SWING PRISM ENDOSCOPE

CROSS-REFERENCES TO RELATED APPLICATIONS

[0001] This application claims the benefit of Provisional Application Ser. No. 61/084,949, filed Jul. 30, 2008, the contents of which are incorporated by reference.

FIELD OF THE INVENTION

[0002] The present invention relates generally to medical apparatus and methods and more particularly to devices and methods to facilitate endoscopic viewing within the ear, nose, throat, paranasal sinuses or cranium.

BACKGROUND

[0003] Functional endoscopic sinus surgery (FESS) is currently the most common type of surgery used to treat chronic sinusitis. In a typical FESS procedure, an endoscope is inserted into the nostril along with one or more surgical instruments. The surgical instruments are then used to cut tissue and/or bone, cauterize, suction, etc. In most FESS procedures, the natural ostium (e.g., opening) of at least one paranasal sinus is surgically enlarged to improve drainage from the sinus cavity. The endoscope provides a direct line-of-sight view whereby the surgeon is typically able to visualize some but not all anatomical structures within the surgical field. Under visualization through the endoscope, the surgeon may remove diseased or hypertrophic tissue or bone and may enlarge the ostia of the sinuses to restore normal drainage of the sinuses. FESS procedures can be effective in the treatment of sinusitis and for the removal of tumors, polyps and other aberrant growths from the nose.

[0004] The surgical instruments used in prior art FESS procedures have included applicators, chisels, curettes, elevators, forceps, gouges, hooks, knives, saws, mallets, morselizers, needle holders, osteotomes, ostium seekers, probes, punches, backbiters, rasps, retractors, rongeurs, scissors, snares, specula, suction cannulae and trocars. The majority of such instruments are of substantially rigid design.

[0005] In order to adequately view the operative field through the endoscope and/or to allow insertion and use of rigid instruments, many FESS procedures of the prior art have included the surgical removal or modification of normal anatomical structures. For example, in many prior art FESS procedures, a total uncinectomy (e.g., removal of the uncinate process) is performed at the beginning of the procedure to allow visualization and access of the maxilary sinus ostium and/or ethmoid bulla and to permit the subsequent insertion of the rigid surgical instruments. Indeed, in most traditional FESS procedures, if the uncinate process is allowed to remain, such can interfere with endoscopic visualization of the maxillary sinus ostium and ethmoid bulla, as well as subsequent dissection of deep structures using the available rigid instrumentation.

[0006] More recently, new devices, systems and methods have been devised to enable the performance of FESS procedures and other ENT surgeries with minimal or no removal or modification of normal anatomical structures. Such new methods include, but are not limited to, uncinate-sparing procedures using Balloon Sinuplasty™ tools and uncinate-sparing ethmoidectomy procedures using catheters, non-rigid instruments and advanced imaging techniques (Acclarent, Inc., Menlo Park, Calif.). Examples of these new devices, systems and methods are described in incorporated U.S. patent application Ser. No. 10/829,917, entitled Devices, Systems and Methods for Diagnosing and Treating Sinusitis and Other Disorders of the Ears, Nose and/or Throat; Ser. No. 10/944,270, entitled Apparatus and Methods for Dilating and Modifying Ostia of Paranasal Sinuses and Other Intranasal or Paranasal Structures; Ser. No. 11/116,118, entitled Methods and Devices for Performing Procedures Within the Ear, Nose, Throat and Paranasal Sinuses; and Ser. No. 11/150,847, entitled Devices, Systems and Methods Useable for Treating Sinusitis, each of which is hereby incorporated herein, in its entirety. Procedures using Balloon Sinuplasty™ tools, such as those described in the above-noted applications, for example, may be performed using various types of guidance, including but not limited to C-arm fluoroscopy, transnasal endoscopy, optical image guidance and/or electromagnetic image guidance.

[0007] In FESS and Balloon Sinuplasty™ procedures, the surgeon typically holds an endoscope with one hand while using the other hand to manipulate surgical instruments. Recognizing the desirability of integrating an endoscope with an operative device so that both could be moved with a single hand, application Ser. No. 11/193,020, entitled Methods and Apparatus for Treating Disorders of the Ear, Nose and Throat (hereby incorporated by reference) describes a number of transnasally insertable sinus guides coupled or integrated with endoscopes.

[0008] Currently available endoscopes used in ear, nose and throat procedures are generally rigid endoscopes that view in only one direction—i.e., either straight ahead or at a fixed angle. At the same time, the nasal/paranasal anatomy is one of many folded and curved structures made of bone covered with soft tissue, thus often making it very challenging to advance and view anatomy with a rigid unidirectional endoscope. For example, it may be quite challenging to advance an endoscope into the nose and around the uncinate process to view the ostium of the maxillary sinus. In fact, this is at least one reason why the uncinate process is removed in traditional FESS procedures. Although angled endocsopes are available, to view the anatomy as desired a surgeon may often need to use multiple different endoscopes during a procedure, switching between endoscopes as different views are desired. This can be quite awkward and cumbersome as well as expensive.

[0009] Therefore, there is a need for new devices and methodology to facilitate endoscopic viewing of anatomy, guidewires, catheters and/or other devices in intracranial procedures, such as ear, nose and throat procedures like paranasal sinus surgery. Ideally, such devices and methods would involve direct viewing of anatomy and surgical tools using an endoscope. Also ideally, such an endoscope would be easy to manipulate and use and would be compatible with a variety of surgical tools and systems. At least some of these objectives will be met by the embodiments of the present invention.

SUMMARY

[0010] Various embodiments are directed to a variable direction of view, swing prism endoscope for use in ear, nose, throat and possibly other intracranial procedures. Such an endoscope is useful when the axis of movement is at an angle with respect to the working or interventional site. The scope allows the user to view anatomy, such as a paranasal sinus ostium, without using/exchanging multiple endoscopes during a procedure or removing tissue as may be required in a

Questions? Contact FDA/CDRH/OCE/DID at CDRH-FOISTATUS@fda.hhs.gov or 301-796-8118

9/12

Records processed under FOIA Request 2011-7650; Released 1/25/12

traditional FESS procedure. Such a scope may also allow a physician to view anatomy and surgical tools without using fluoroscopy or image guidance systems, or at least with limited use of such systems, so that a procedure might be performed in a clinic or procedure room setting rather than in an operating room. Eliminating the use of fluoroscopy during a Balloon Sinuplasty™ or other ear, nose and throat procedure makes such a procedure more convenient for the physician, as a C-arm fluoroscope is not required in the operating room or procedure room. Eliminating or reducing the use of fluoroscopy may also be advantageous for physician and patient because they both receive less (or no) radiation dose.

[0011] One embodiment includes a method for advancing a therapeutic device into or through an opening or passageway into a paranasal sinus. The paranasal sinus opening may include a maxillary sinus ostium, at least one of a frontal sinus ostium or a frontal sinus outflow tract, a sphenoid sinus ostium, or a natural or man made opening of an ethmoid sinus. The method includes introducing a variable direction of view endoscope into a nasal cavity with the endoscope adjusted to a first direction of view between about 0 degrees and about 15 degrees relative to a longitudinal axis of the endoscope. A therapeutic device is introduced into the nasal cavity and the endoscope is adjusted to a second direction of view directed toward the sinus opening or passageway. The method also includes advancing the therapeutic device into or through the sinus opening and viewing at least one of the sinus opening or passageway or the therapeutic device using the endoscope adjusted to the second direction of view.

[0012] In one embodiment, the therapeutic device used in this procedure includes a balloon dilation catheter and a balloon of the catheter is dilated to expand the opening or passageway into the paranasal sinus. The method may also include introducing a guide catheter into the nasal cavity. Introduction of the guide catheter may occur before the direction of view of the endoscope is adjusted. However, the direction of view of the endoscope may be adjusted before the guide catheter is introduced.

[0013] The therapeutic device may include a flexible device. Further, the therapeutic device may be advanced through a lumen of the guide catheter into or through the paranasal sinus opening. A guidewire may also be advanced through the lumen of the guide catheter and into the paranasal sinus before advancing the balloon catheter over the guidewire and through the guide catheter to position a balloon of the catheter in the sinus opening. In one embodiment, the guidewire may be a lighted guidewire having an illuminating distal end, and the lighted guidewire is used for transilluminating the paranasal sinus while the illuminating distal end is located in the sinus.

[0014] In one embodiment of the method for treating a paranasal sinus, the therapeutic device includes an irrigation catheter, and the paranasal sinus is irrigated using the irrigation catheter when at least one aperture of the irrigation catheter is located within the sinus. The therapeutic device may also include a drug delivery reservoir that is implanted in at least one of the sinus or the opening or passageway into the sinus.

[0015] Further, during the procedure, the endoscope may be adjusted to the first direction of view or to a third direction of view to view at least one of the therapeutic device or anatomy of the nasal cavity.

[0016] In another embodiment, the endoscope includes a swing prism endoscope. In this embodiment, adjusting the direction of view includes rotating a prism of the endoscope.

[0017] Another embodiment includes a method for viewing anatomy in a head of a human or animal subject by introducing a variable degree of view endoscope into the subject's head with the endoscope adjusted to a first degree of view. Also, the anatomy in the head is viewed using the endoscope with the first degree of view, and a first portion of a handle of the endoscope is rotated about a longitudinal axis of the endoscope to adjust the endoscope to a second degree of view. The first portion of the handle rotates relative to a shaft of the endoscope. Also, the anatomy in the head is viewed using the endoscope with the second degree of view. The method may include rotating a second portion of the handle about the longitudinal axis to rotate the shaft of the endoscope without rotating the rest of the handle. Also, rotating the first portion of the handle adjusts the endoscope to the first degree of view or to a third degree of view.

[0018] In one embodiment, the step of introducing the endoscope includes passing the endoscope into a nasal cavity. Once the endoscope has been introduced into the nasal cavity, the viewed anatomy may consist of the nasal cavity anatomy, an opening or passageway into a paranasal sinus ostium, a paranasal sinus, a Eustachian tube opening, an oral cavity, a nasopharynx, a throat, a larynx, and a trachea.

[0019] A physician or user may view a direction of view indicator on the endoscope indicating the direction of view in which the endoscope is pointing. The user may also view at least one medical or surgical device introduced into the subject's head with the endoscope.

[0020] One embodiment of a variable direction of view endoscope configured to pass into a head of a human or animal subject is also disclosed. The endoscope includes an elongate shaft having a proximal end, a distal end, and an outer diameter of no more than approximately 5 mm. A viewing window is disposed along the shaft at or near the endoscope's distal end, and a pivotable prism is disposed in the shaft near the distal end to change a direction of view of the endoscope. The viewing window extends from the distal end of the shaft proximally along one side of the shaft. There may also be a handle coupled with the proximal end of the elongate shaft. The handle includes a first rotating dial for adjusting the viewing angle of the endoscope by pivoting the prism, and the first rotating dial rotates about a longitudinal axis of the shaft. The handle may further include a second rotating dial for rotating the shaft of the endoscope without rotating the rest of the handle. In certain embodiments, the first and second dials are sealed to allow the endoscope to be sterilized in an autoclave without damaging the endoscope.

[0021] In one embodiment of the variable direction of view endoscope, the first dial is coupled to the prism via a magnet drive mechanism. Also, the endoscope may include a self-focusing lens disposed in the shaft, configured to automatically focus the view acquired through the viewing window as the prism pivots.

[0022] A field of view of the endoscope is between approximately 60 degrees and approximately 70 degrees or from about 5 degrees to about 100 degrees. Also, a direction of view of the endoscope ranges from between about 0 degrees to about 120 degrees. In use, the endoscope is compatible with 300 Watt Xenon light sources. Also, the endoscope may include a handle attachment attached to the handle for facilitating holding the handle.

913

Questions? Contact FDA/CDRH/OCE/DID at CDRH-FOISTATUS@fda.hhs.gov or 301-796-8118

Records processed under FOIA Request 2011-7650; Released 1/25/12

[0023] Further aspects, elements and advantages of the present invention will be described in further detail below in reference to the attached drawing figures. Although the various embodiments will typically be described in the context of paranasal sinus surgical procedures, in many embodiments the devices, systems and method described herein may be used in other ear, nose and throat procedures and/or in other intracranial procedures.

BRIEF DESCRIPTION OF THE DRAWINGS

[0024] FIG. 1 depicts a perspective view of a swing prism endoscope according to one embodiment of the present invention;

[0025] FIG. 2 depicts a side view, depicting viewing ranges of an endoscope equipped with a swing prism, according to one embodiment of the present invention;

[0026] FIG. 3 depicts a cross-sectional view of a distal end of a swing prism endoscope, according to one embodiment of the present invention;

[0027] FIG. 4 depicts a cross-sectional view of a distal end of a swing prism endoscope, according to one embodiment of the present invention;

[0028] FIG. 5 depicts a cross-sectional view of a distal end of a swing prism endoscope, according to another embodiment of the present invention;

[0029] FIG. 6 is a cross-sectional view of a distal end of a swing prism endoscope, according to yet another embodiment of the present invention;

[0030] FIG. 7 depicts a side view of a proximal body member or handle of a swing prism endoscope equipped with turning dials to control the rotation of the endoscope shaft and rotation of the swing prism;

[0031] FIGS. 8-10 depict three different embodiments of a handle that can be attached to the handle of the swing prism endoscope;

[0032] FIG. 11 depicts a cross-sectional view of the handle of a swing prism endoscope showing a sealed chamber and a driving mechanism using magnets to control the rotation of the swing prism;

[0033] FIG. 12 depicts a cross-sectional view of the handle of a swing prism endoscope showing a sealed chamber and a driving mechanism using bellows to control the rotation of the swing prism;

[0034] FIGS. 13 and 14 depict a washing system disposed over a swing prism endoscope in a resting state;

[0035] FIG. 15 depicts the washing system shown in FIGS. 13 and 14 in a forward position or activated state;

[0036] FIG. 16 depicts viewing angles of a typical endoscope having a flexible or steerable shaft;

[0037] FIG. 17 depicts viewing angles of a swing prism endoscope having a flexible or steerable shaft;

[0038] FIG. 18 depicts a reduced number of optical fibers that lapped at various angles to create a wider illuminating field;

[0039] FIG. 19 depicts a divergent lens positioned at a distal end of optical fibers to create a wider illuminating beam;

[0040] FIG. 20 depicts a partial view of a miniaturized endoscope having first and second prisms and a divergent lens to increase the field of view;

[0041] FIG. 21 depicts a partial view of a miniaturized endoscope having a first prism and a divergent lens to increase the field of view;

[0042] FIG. 22 depicts a partial view of a miniaturized endoscope having first and second prisms and using a divergent lens in combination with a concave lens to increase the field of return image capture;

[0043] FIG. 23 depicts a partial view of a miniaturized endoscope having a first prism and using a divergent lens in combination with two concave lenses to increase the field of return image capture;

[0044] FIG. 24A depicts an embodiment of an endoscope having a handle with an open configuration;

[0045] FIG. 24B depicts a cross-sectional view of the handle of the endoscope shown in FIG. 24A;

[0046] FIG. 24C depicts an embodiment of an endoscope without a light post on a handle;

[0047] FIG. 25 depicts a cross-sectional view of handle of an endoscope that includes ferric fluid seals;

[0048] FIG. 26A depicts a swing prism endoscope introduced into a nostril of a human or animal subject, according to one embodiment of the present invention;

[0049] FIG. 26B depicts the endoscope of FIG. 26A advanced farther into the paranasal anatomy, with the swing prism adjusted to view at an angle relative to the longitudinal axis of the swing prism scope;

[0050] FIGS. 27A-27D depict partial sagittal sectional views through a human head showing various steps of a method of using a swing prism scope to view and facilitate accessing a paranasal sinus using a sinus guide, according to one embodiment of the present invention;

[0051] FIG. 28 depicts a perspective view of one embodiment of a guide system;

[0052] FIG. 29 depicts a perspective view of the guide system in use on a human subject;

[0053] FIG. 30A depicts a side view of the guide catheter of the system of FIG. 28.

[0054] FIG. 30B depicts a cross sectional view through line 30B-30B of FIG. 30A;

[0055] FIG. 30C depicts a cross sectional view through line 30C-30C of FIG. 30A; and

[0056] FIG. 31 depicts a side view of the connector/camera/light cable assembly of the system of FIG. 28.

DETAILED DESCRIPTION

[0057] In the following description, where a range of values is provided, each intervening value, to the tenth of the unit of the lower limit unless the context clearly dictates otherwise, between the upper and lower limits of that range is also specifically disclosed. Each smaller range between any stated value or intervening value in a stated range and any other stated or intervening value in that stated range is encompassed within the invention. The upper and lower limits of these smaller ranges may independently be included or excluded in the range, and each range where either, neither or both limits are included in the smaller ranges is also encompassed within the invention, subject to any specifically excluded limit in the stated range. Where the stated range includes one or both of the limits, ranges excluding either or both of those included limits are also included in the invention.

[0058] Unless defined otherwise, all technical and scientific terms used herein have the same meaning as commonly understood by one of ordinary skill in the art to which this disclosure belongs. Although any methods and materials similar or equivalent to those described herein can be used in the practice or testing of the present disclosure, the preferred

914

Questions? Contact FDA/CDRH/OCE/DID at CDRH-FOISTATUS@fda.hhs.gov or 301-796-8118

Records processed under FOIA Request 2011-7650; Released 1/25/12

methods and materials are now described. All publications mentioned herein are incorporated herein by reference to disclose and describe the methods and/or materials in connection with which the publications are cited.

[0059] As used herein and in the appended claims, the singular forms "a", "an", and "the" include plural referents unless the context clearly dictates otherwise. Thus, for example, reference to "a channel" includes a plurality of such channels and reference to "the endoscope" includes reference to one or more endoscopes and equivalents thereof, and so forth.

[0060] The publications discussed herein are provided solely for their disclosure prior to the filing date of the present application. Nothing herein is to be construed as an admission that the present disclosure is not entitled to antedate such publication by virtue of prior invention. Further, the dates of publication provided may be different from the actual publication dates which may need to be independently confirmed.

[0061] The following detailed description, the accompanying drawings and the above-set-forth Brief Description of the Drawings are intended to describe some, but not necessarily all, examples or embodiments of the disclosure. The contents of this detailed description do not limit the scope of the disclosure in any way.

[0062] FIG. 1 shows a variable degree of view endoscope **10** according to one embodiment. The endoscope **10** may include an elongate shaft **30** with a distal end **70** and a proximal end **71**, the latter being attached to a proximal body member or handle **52** that can be adapted to engage and attach to the adjustable scope/lock extension, and a swing prism (not shown, but described in relation to FIGS. 3 et seq. below) for adjusting the viewing angle of the endoscope **10**. The shaft **30** may house an image fiber bundle or optic fibers **54** that extends coaxially through its center, with light transmitting fibers **56** disposed about the periphery. In one embodiment, the shaft **30** may be a braided polyimide sheathing that has a maximum outer diameter of 0.0375 inches and a length of two feet. Preferably, the image fiber bundle is made up of 10,000 thin image fibers, and the light transmitting fibers are illumination fibers with a diameter of between about 0.008 and 0.020 inches, with a minimum lux of about 10,000. In another embodiment, the endoscope **10** may use rod lens technology instead of using image fiber bundles.

[0063] Referring now to FIG. 2, the distal end **70** of the endoscope shaft **30** is shown with angular measurements according to one embodiment. In describing FIG. 2, "field of view" means the angular width/height viewed at any one time via the endoscope, "direction of view" means the direction in which the center of view is pointing at any one time (also can be called the "degree of view" as in "variable degree of view endoscope") and "total range of view" means the total angular distance across which the endoscope can view when the swing prism is moved from one extreme direction of view to the opposite extreme direction of view. The angles referred to are in relation to the longitudinal axis of the endoscope shaft **30**, which is the zero angle.

[0064] In some embodiments, for example, the endoscope **10** may have a range of directions of view from about −5° to about 150° and more likely from about 0° to about 120° or from about 5° to about 100°. In some embodiments, the endoscope may have a field of view from about 50° to about 100° or more likely from about 60° to about 70°. From the ranges of the directions of view and the fields of view, the total ranges of view may be determined. For example, in one embodiment the endoscope **10** may have directions of view ranging from about 5° to about 100° and may have a field of view of about 60°. In this embodiment, the total range of view would be from about −25° to about 130°. If the ranges of directions of view were instead from about 0° to about 120° and the field of view were about 60°, then the total range of view would be from about −30° to about 150°. In various embodiments, the endoscope **10** may have any of a number of different combinations and ranges of directions of view, fields of view and total ranges of view.

[0065] Referring now to FIGS. 3-6, various configurations distal portions **70** of the variable degree of view endoscope **10** are shown, each having different configurations of a swing prism **72** and/or mechanisms for mounting a swing prism **72**. In a first approach, the swing prism **72** is mounted for rotation between a biasing spring **76** and an actuator **78**. Here, the actuator **78** can come in the form of a wire which extends from the distal portion **70** of the endoscope **10** to a proximal portion which is conveniently accessible and manipulatable by an operator. In this regard, the actuator can be attached to a sliding member or configured to be taken up by a rotating dial (not shown). As so configured, images can be captured and received through a window **75** and transmitted through the swing prism **72** and self-focusing lens **74** to the image fiber bundle **54**. The swing prism **72** provides the desired seventy degree field of view throughout a viewing range of zero degrees to ninety five degrees by manipulating the actuator **78**.

[0066] In another approach shown in FIG. 4, the swing prism **72** can be mounted in a housing **82** placed in operative association with a rotatable shaft **84** which extends proximally to an operator. A distal portion of the shaft **84** is provided with threaded structure **86** arranged to engage teeth **88** formed on the housing **82**. Rotating the shaft accomplishes positioning the swing prism **72** as desired. Again, these components can be arranged to provide a one hundred sixty five degree range of viewing.

[0067] In yet another approach shown in FIG. 5, the swing prism **72** can be mounted in a housing **90** placed in operative association with a flat bar **92** including teeth **94** which extends proximally to an operator. The housing **90** can be mounted on a pin (not shown) attached to the distal end portion **70** of the endoscope shaft **30**, where the housing and swing prism pivot on the pin. There are also teeth **98** on the housing that engage teeth **94** on the flat bar. Moving the flat bar in either the proximal or distal directions accomplishes positioning the swing prism **72** as desired. Again, these components can be arranged to provide one hundred sixty five degree range of viewing.

[0068] In an approach shown in FIG. 6, the swing prism **72** is mounted for rotation between a torsion spring **100** and a pull wire **102**. The torsion spring can be any spring, such as an extension spring, leaf spring, or the like. Here, the pull wire **102** may extend from the distal portion **70** of the endoscope shaft **30** to a proximal portion which is conveniently accessible and manipulatable by an operator. In this regard, the pull wire can be attached to a sliding member or configured to be taken up by a rotating dial. Images can be captured and received through the window (not shown) and transmitted through the swing prism **72** and self-focusing lens **74** to the image fiber bundle **54**. In this embodiment, there is always tension on swing prism between the torsion spring and pull wire, so there is no lag or buckling in the pull wire during

Questions? Contact FDA/CDRH/OCE/DID at CDRH-FOISTATUS@fda.hhs.gov or 301-796-8118

Records processed under FOIA Request 2011-7650; Released 1/25/12

operation. Further, use of the pull wire and torsion spring to move the swing prism allows the diameter of the endoscope to be smaller.

[0069] The images collected by the image fiber bundle **54** can be transmitted to a monitor (described below) to thereby provide the operator with visual data concerning the particular interventional procedure being performed. In one embodiment, the endoscope **10** be compatible with a **300** Watt Xenon source and be configured with a universal light guide connector, thus making the assembly useable with conventionally available devices. In one embodiment, the endoscope shaft **30** may have an outer diameter of approximately **4** mm and a working length of about **175** mm. Moreover, the endoscope shaft **30** is preferably provided with rounded surfaces thus making the assembly atraumatic in use. It has also been found useful to construct the endoscope **10** in a manner and embodying material which permit the endoscope **10** to be sterilized using an autoclave.

[0070] In certain approaches, it may be useful to configure the endoscope **10** with indicia indicating the direction of view of the swing prism and/or a rotational position of the endoscope **10**. Thus, a proximal portion of the actuator **78** of FIG. **3**, for example, can be coupled with a dial which includes markings indicative of the angle of the swing prism **72**. Similarly, a proximal end of the shaft **84** of FIG. **4** can be attached to a dial including indicia providing information relative to the angle of the swing prism **72**. Moreover, the external surface of the endoscope **10** can include marking indicators rotational positioning of the overall assembly.

[0071] The swing prism endoscope **10** may be freely advanced within anatomy along with a sinus guide in order to facilitate endoscopic viewing of the desired anatomical structures and/or to view, guide and/or verify the positioning of the sinus guide device or a working device that has been inserted through the sinus guide. The ability to advance the tip of the endoscope **10** within anatomy to view the end of the sinus guide allows the devices to be positioned closer to anatomy or to reach spaces in the paranasal sinuses that the devices cannot travel due to size constraints.

[0072] As discussed above with reference to FIGS. **3** through **6**, the rotation of the swing prism may be controlled by a dial. As shown in FIG. **7**, a proximal dial **104** is disposed on the handle **52** of the endoscope **10** for controlling the rotation of the swing prism. The proximal dial **104** has a circular configuration and includes ridges **106** that provide leverage for turning the proximal dial or dial to a desired position. Further, the ridges provide a tactile feel for the dial location and grooves **108** between the ridges provide an area for the user's fingers to rest. In one embodiment, there are eight ridges evenly placed around the proximal dial **104**, however, there may be fewer or more ridges placed around the dial. The height of the ridges is approximately 0.05 inches, and can be increased or decreased depending on user preferences. Also, the spacing between each ridge is approximately 0.228 inches, and can be increased or decreased depending on the number of ridges disposed on the dial and the width of the ridges.

[0073] Still referring to FIG. **7**, the handle **52** of the endoscope may include indicia **107** adjacent the proximal dial **104** to provide information relative to the angle of the swing prism **72**. In this embodiment, there is also a marker **108** on the proximal dial itself indicating the relative angle of the swing prism **72**. As shown, the indicia **107** adjacent the proximal dial indicate the relative angle of the swing prism **72** anywhere from 0 degrees to 180 degrees.

[0074] In one embodiment, a distal dial or shaft dial **110** is disposed on the handle **52** of the endoscope as shown in FIG. **7**, and the shaft dial **110** controls rotation of the endoscope shaft **30**. A marker **112** is shown on the shaft dial **110** to indicate the relative position of the endoscope shaft **30**. More particularly, the marker **112** on the shaft dial indicates the relative position of the window **75** (see FIG. **3**) at the distal portion **70** of the endoscope **10**. As shown in FIG. **7**, since the marker **112** is on the top side of the endoscope, the window **75** is also pointing towards the top side of the endoscope **10**, allowing the endoscope **10** to view the surroundings in the same general direction. Rotating the shaft dial **110** allows the endoscope to view its surroundings in a full three-hundred and sixty degrees of rotation. Having a rotating shaft dial **110** that rotates the endoscope shaft **30** without rotating the entire handle **52** may be advantageous because it allows for rotation of the endoscope shaft **30** without rotating the light post **109**.

[0075] FIG. **8** shows a handle attachment **114** attached to the handle **52** of the endoscope **10**. The handle attachment **114** facilitates turning the dials **104** and **110** while the user is holding the endoscope **10**. The handle attachment **114** is affixed to the handle **52** and/or may be snap fit onto the light post **109** stemming from the handle **52**. A light post portion **116** of the handle attachment **114** snaps onto the light post **109** and shields the user from the heat radiating from the light post **109**. When holding the handle attachment **114** and endoscope **10**, the crook between the user's thumb and extended index finger is positioned at the curve **118** under the light post portion **116** of the handle while the palm of the user's hand rests on the body **120** of the handle attachment 1 14. The handle attachment **114** may provide the user with comfort and balance while holding the endoscope and may also provide additional torque to turn the dials **104** and **110**. Holding the endoscope **10** with the handle attachment **114** allows the user to turn the proximal dial **104** with the thumb and index fingers, and the distal dial **110** can be accessed with the ring or pinkie finger.

[0076] Another embodiment of a wrap-around handle attachment **122** that is snap-fit onto the handle **52** of the endoscope is shown in FIG. **9**. The wrap-around handle attachment **122** allows the user to grip the endoscope tightly without impinging the rotation of the dials **104** and **110**. A handle attachment back **124** is designed to be relatively long and rounded to fit a variety of positions within the palm of the user. With a light post cut out **126**, the handle attachment **122** can be moved or positioned around the handle **52** about two hundred and seventy degrees to facilitate a variety of holds by the user. The handle attachment **122** includes an opening **128** that allows the handle attachment **122** to more than half-way overlap the dials and handle **52** of the endoscope **10** while still allowing access to the dials **104** and **110**.

[0077] Yet another embodiment of a handle attachment **130**, including legs **132** that snap-fit onto the handle **52** of the endoscope **10**, is shown in FIG. **10**. Handle attachment **130** includes a back **134** that fits against the user's palm and a dial cover **136** that extends over the proximal dial **104**. A light post slot **138** can also be seen in FIG. **10** to accommodate the light post **109**. The user is allowed to freely engage the dials **104** and **110** with his fingers when holding the endoscope **10** with the handle **130**.

[0078] The optical fibers **54** of the endoscope **10** may be enclosed in a sealed chamber to allow the endoscope to be

Questions? Contact FDA/CDRH/OCE/DID at CDRH-FOISTATUS@fda.hhs.gov or 301-796-8118

Records processed under FOIA Request 2011-7650; Released 1/25/12

autoclaved. In one embodiment shown in FIG. 11, an outer magnet **140** attached to a housing **142** is controlled in longitudinal motion by the proximal dial **104** which drives a screw mechanism. A pin **144** is attached to the proximal dial **104** and extends into the handle **52** and through a curved slot **146**. The curved slot may spiral around the housing **142**. As the proximal dial **104** is turned, the pin moves along the curved slot and moves the housing **142** in a proximal or distal direction along the longitudinal axis of the endoscope. As the outer magnet moves forward and backward, it drives an inner magnet **148** that has an opposite charge as the outer magnet. The inner magnet is disposed within an inner shield **150** that creates the sealed chamber **151** for the optical fibers. The inner magnet is also attached to a push/pull mechanism **152** that rotates the swing prism at the distal end of the endoscope. The push/pull mechanism may be an actuator, pull wire, bar, hypotube, or the like, that is attached to the swing prism. As the inner magnet is driven forward or backward by the movement of the outer magnet, the inner magnet pushes or pulls the driver or push/pull mechanism for the rotatable prism.

[0079] In another embodiment shown in FIG. **12**, a middle bellow joint **154** is attached to the housing **142** and is controlled in longitudinal motion by the proximal dial **104** which drives a screw mechanism similar to the embodiment as shown in FIG. **11**. The pin **144** attached to the proximal dial extends into the handle **52** and through the curved slot disposed in the housing **142**. There is also a proximal bellow joint **156** and a distal bellow joint **158** that are fixed within the endoscope on an inner shield **160**, and there are flexible bellows **162** that are disposed between the bellow joints **154**, **156**, and **158**. As the proximal dial **104** is turned, the pin moves along the curved slot and moves the housing **142** in a proximal or distal direction along the longitudinal axis of the endoscope and moves the middle bellow joint. As the middle bellow joint moves forwards and backwards, it drives the swing prism by moving the push/pull mechanism **152** that is attached to the middle bellow joint. The inner shield **160** creates the sealed chamber **151** for the optical fibers **54**. The push/pull mechanism may be an actuator, pull wire, bar, hypotube, or the like, that is attached to the swing prism. In this embodiment, the bellow joints can easily transmit torque for rotation of a hypotube or rotatable shaft that can be attached to the middle bellow joint **154**.

[0080] In one embodiment, the endoscope **10** is a re-usable instrument. Conventionally, endoscopes are processed between uses via steris, autoclave or other known processes. The time required to process the endoscope can be significant, resulting in delays between cases or the need to purchase multiple endoscopes for procedures occurring one after the other. One embodiment includes a disposable sterile sleeve **164** (see FIG. **1**) that is used with the endoscope **10**. The sterile sleeve is low-profile and optically clear at the distal tip to allow viewing with the prism. The sterile sleeve spans the full length of the endoscope that is inserted into the patient for the procedure so that there is no direct contact between the patient and the endoscope. Also, the sterile sleeve may cover the proximal end of the endoscope and camera so there is no direct contact between the user and the endoscope. Once a procedure is complete, the user simply removes and discards the sterile sleeve and then inserts a new sterile sleeve over the endoscope for the next case. Using the sterile sleeve may eliminate the need to process the endoscope between cases or in the office environment.

[0081] During case procedures, endoscopes have the tendency to lose visual clarity because of the debris, blood, and/or mucus adhering to the distal tip of the endoscope. Conventionally, surgeons or users remove the endoscope from the patient frequently to clean the distal tip of the endoscope. Alternatively, some surgeons use scope washing systems having an open sheath over the endoscope shaft to deliver fluid and/or vacuum to enable in situ cleaning. Each washing sheath is specifically designed for the endoscope geometry, and because endoscope distal tip geometries vary by viewing angles, there are also multiple cleaning sheaths that must be correspondingly used. Therefore, when a user wants to change the scope viewing angle during a procedure, the washing sheath must also be changed. In one embodiment described below, a washing system and sheath is used with the endoscope **10**. As described above, the geometry of the endoscope **10** does not change when the direction of the desired view changes, and therefore, a single fixed sheath may be used with the swing prism endoscope described herein.

[0082] A washing system **168** is shown disposed on the endoscope **10** in FIGS. **13** through **15**. The washing system includes a button **170** positioned between first and second cones **172** and **174**. The first and second cones **172**, **174** are connected together by a spring **176** (FIG. **14**). In this embodiment, the first cone **172** is fixed to the endoscope and the second cone **174** is connected to a wiping sheath **178**. A distal end of the wiping sheath includes a cloth **180**, which may be a hydrophilic elastomer. As shown in FIGS. **13** and **14**, the washing system **168** is in its resting state, with the extension spring **176** in a drawn state and the first and second cones at a minimum distance from one another. In the resting state, the cloth **180** is positioned proximal to the lens **75** of the endoscope as shown in FIG. **13**.

[0083] To move the washing system **168** forward to clean the lens **75** of the endoscope, the button **170** is pushed, such that it moves off the central axis of the endoscope in any direction. This movement of the button causes the second cone **174** to move forward since the first cone **172** is fixed to the endoscope. Driving the second cone **174** forward or in the distal direction causes the wiping sheath **178** to also move forward and push the cloth **180** over the lens **75** since it is attached to the second cone. The activated state of the washing system is shown in FIG. **15**. The cloth **180** is elastomeric, and therefore, it conforms to the shape of the lens **75** and wipes any debris, mucus, and/or blood off of the lens. The porous hydrophilic cloth also absorbs any fluid which has collected on the lens. Once the button **170** is released, the spring recoils and draws the cloth back over the lens into a position proximal to the lens.

[0084] In one embodiment, the cloth **180** may have a supporting structure, such as, rods, mesh, or the like, to prevent the cloth from bunching or folding up when the cloth is pushed forward in the distal direction. Also, it has been contemplated that the leading distal edge of the cloth **180** may be silicone, rubber or some other hydrophilic material to wipe the fluid forward (distally) from the lens **75**. The leading distal edge of the cloth may also have multiple slits cut into it to help wipe or push debris off of the lens.

[0085] In the embodiment described above, the endoscope **10** may have a relatively rigid shaft. However, it has been contemplated that the shaft of the endoscope **10** may also be flexible to greatly enhance the viewing area of the endoscope. As shown in FIG. **16**, a typical endoscope is shown that can visualize a fixed area A or B at any position within the flexible

Questions? Contact FDA/CDRH/OCE/DID at CDRH-FOISTATUS@fda.hhs.gov or 301-796-8118

917

Records processed under FOIA Request 2011-7650; Released 1/25/12

range of the typical endoscope. One embodiment of the current invention, shown in FIG. 17, can visualize a much larger range A' or B' by modifying the flex or position of the swing prism within the endoscope 10. It is contemplated that a flexible endoscope can be constructed with fiber scope or video chip technology. Such flexible endoscope may be useful for intra nasal, intra sinus, skull bass, laryngeal, orthopaedic, abdominal and other surgeries where a variable and large viewing range is desired.

[0086] In one embodiment, the endoscope 10 uses rod lens technology to acquire and transfer images along the shaft of the endoscope. In another embodiment, video chip technology as understood in the art requires rigidity around the distal portion of the endoscope and the images are transferred over a wire that enables the shaft of the endoscope to be downsized. Acquisition of the image via video chip technology may also allow the diameter of the distal portion of the endoscope to be downsized, without compromising the quality of the image or the size of the image that is viewed by the user. Current video chip technology requires the distal end of the endoscope to have a minimum diameter of about 1.2 mm to about 1.8 mm. With the addition of illumination fibers and mechanics for the swing prism, an endoscope using video chip technology may be constructed with a diameter at the distal portion of the endoscope of less than 4 mm.

[0087] Certain embodiments are disclosed herein that increase the field of illumination and increase the field of image capture after miniaturizing an endoscope, such as the swing prism endoscope. When an endoscope is reduced in size or miniaturized, the number of optical fibers is decreased, thereby reducing the field of illumination utilizing such optical fibers. Also, miniaturizing an endoscope reduces the field of image capture due to the smaller size of optical components for the return image. As shown in FIG. 18, one embodiment of a miniaturized endoscope includes optical fibers 182 lapped at various angles from about 0 degrees to about 30 degrees. In this embodiment, the optical fibers can be arranged with such angles increasing from a chosen interior fiber 182*a* to the outer or edge fibers 182*b*, and thereby, creating a wider illuminating field A.

[0088] In another embodiment shown in FIG. 19, a diverging lens 184 can be disposed at the end of the optical fibers 182 to create a wider illuminating beam B. In this embodiment, the optical fibers are lapped at about 0 degrees; however, the diverging lens can be combined with lapped optical fibers similar to those shown in FIG. 18 to amplify the divergence of the illuminating beam. The diverging or expansion lens can be fabricated from a block of glass with the required curvature for beam divergence and then parted by using a saw or high pressure water jet to minimize edge defects. The non-functional sides of the individual diverging lens could be coated with nickel or gold to reduce optical leakage by creating internally reflective surfaces. It is noted that the input power to the optical fibers of a miniaturized endoscope can be increased to match the illumination intensity of a standard endoscope.

[0089] To maintain or improve the field of view captured by a return beam through a prism, a divergent lens may be used on a miniaturized endoscope. As shown in FIG. 20, the miniaturized endoscope includes a first prism 186 and a second prism 188 contacting the first prism. There is also a divergent lens 184 disposed on the second prism 188 which increases the field of view C. FIG. 21 shows a miniaturized endoscope with only the first prism 186 being used and the divergent lens 184 disposed near the first prism. As shown in FIG. 21, Ø may be optimized for the return beam relative to the axis of the endoscope.

[0090] In another embodiment, a concave or negative refractive power lens may be mounted to the distal prism 186 to increase the field of return image capture for the return optics. As shown in FIG. 22, a negative refractive power lens or concave lens 190 is used in combination with the positive refractive power lens or divergent lens 184 to achieve a wider angle of image capture while minimizing aberrations on the fiber optics to increase image quality. In this embodiment, the steering mechanism for the prism may be eliminated if the range of the wide angle image is sufficient to cover the target area without steering the prism. In embodiments where the steering mechanism is eliminated, this will create more space within the miniaturized endoscope for adding more illuminating fiber optics to better illuminate the target area and improve reliability.

[0091] In another embodiment shown in FIG. 23, two negative refractive power lenses are used with a single prism of a miniaturized endoscope including a prism steering mechanism. As shown in FIG. 23, a first negative refractive power lens or concave lens 190*a* is disposed distally of the prism 186 and a second negative refractive power lens or concave lens 190*b* is disposed proximally of the prism 186. In this embodiment, the first and second concave lenses can operate in conjunction with one another or individually as required. Also, the positive refractive power lens or divergent lens 184 is positioned distally of the first concave lens 190*a*. The divergent lens 184 works with the first and second concave lenses 190*a* and 190*b* to reduce optical aberrations in the lens system and to enhance the image quality.

[0092] Referring now to FIGS. 24A and 24B, one embodiment of the handle 52 of the endoscope may be open to allow fluid to freely move in and out of the handle 52. In this way, the handle 52 of the endoscope may be cleaned and dried while the sealed chamber 151 (see FIG. 11 or 24B) remains sealed. In one embodiment the proximal body 52 has an open configuration by drilling holes 192 into the housing of the handle 52. In another embodiment, a mesh may be used to create an open handle 52. Without an open configuration, there is a possibility that fluid may leak into the inner chamber of the handle 52 through a broken seal. Any fluid that enters the inner chamber of the handle 52 has the potential of rusting components and allowing bacterial growth. Therefore, providing the handle 52 with an open configuration prevents this problem in the inner chamber of the handle because any fluid entering will more easily evaporate or be drained through the holes 192.

[0093] The handle 52 of the endoscope shown in FIG. 24B is similar to the embodiment shown in FIG. 11, where the push/pull mechanism 152 is controlled by an outer magnet 140 and an inner magnet 148 as discussed above, and the inner magnet is disposed within the inner shield 150 that creates the sealed chamber 151 for the optical fibers 54. Light fiber 194 is also shown in FIG. 24B extending from the light post 193 and into the sealed chamber 151 or optical chamber. In this embodiment, the light fiber must be free moving in order to allow the endoscope shaft to rotate in relation to the light post. In order to maintain the seal on the sealed chamber 151, a flexible sheath 196 covers the light fiber 194 and is affixed to the sealed chamber. This flexible sheath may be

Questions? Contact FDA/CDRH/OCE/DID at CDRH-FOISTATUS@fda.hhs.gov or 301-796-8118

Records processed under FOIA Request 2011-7650; Released 1/25/12

formed of silicone or steel. The flexible sheath **196** allows the light fiber to move and the flexible sheath protects the light fiber from damage.

[0094] In another embodiment shown in FIG. **24**C, the light post as shown in FIG. **24**B has been removed, and the light fiber **194** within the flexible sheath **196** exits the handle **52**. In this embodiment, the light fiber would be connected to a light cable further away from the endoscope. Removing the light post prevents heat build up on the handle where the user holds the endoscope.

[0095] Yet another embodiment of an endoscope is shown in FIG. **25**, where the internal mechanisms of the endoscope are sealed from the outside environment. FIG. **25** shows a cross-sectional view of the handle **52** of the endoscope **10** with the internal driving mechanisms removed for clarity. In this embodiment, ferric fluid, which can be an oil containing iron particles mixed within, is injected into spaces **198** between the dials or dials **104** and **110** and the inside portion of the handle **52**. Teeth **199** are formed on the surfaces of the dials **104** and **110** to trap the ferric fluid as shown in FIG. **25**. It has also been contemplated that teeth can be formed on the internal surface of the handle. Either the dials **104** and **110** or the handle **52** can contain a magnet disposed near or forming spaces **198**, and these magnets can attract and bond with the magnetic ferric fluid. In another embodiment, both the dials and the handle may contain magnets at the spaces **198**. As shown in FIG. **25**, the teeth on the distal dial **110** are formed on a proximal portion of the dial that is connected with the shaft of the endoscope and positioned within the internal chamber of the handle. Therefore, the spaces formed around the internal circumference of the handle become a fluid seal.

[0096] This bonding between the magnets within the dials **104** and **110** or the handle **52** and the ferric fluid allows the dials to move in relation to the handle with little or no friction. Also, this bonding seals the internal chamber of the handle from the outside environment. These fluidic seals will not wear like a typical O-ring and they are capable of withstanding high pressures.

[0097] Referring now to FIGS. **26**A and **26**B, one embodiment of a method of using a swing prism endoscope in the nasal and paranasal anatomy is described. For ease of illustration, FIGS. **26**A and **26**B show a nostril N, a nasal cavity **1009**, and a non-specific paranasal sinus **1022** with a natural paranasal sinus ostium **1020**. In various embodiments, the endoscope **10** may be used in procedures addressing the maxillary, frontal, sphenoid and/or ethmoid paranasal sinuses and their related ostia. FIGS. **27**A-**27**D, for example, show a method involving dilation of a natural ostium of a sphenoid sinuse. However, it may be even more advantageous to use a swing prism endoscope of the present application in a procedure involving the maxillary and/or frontal paranasal sinuses, as the natural openings into these sinuses are usually difficult to visualize using an endoscope without removing one or more natural anatomical structures. Therefore, although FIGS. **26**A and **26**B show a generic paranasal sinus, and FIGS. **27**A-**27**D show a sphenoid sinus, the endoscopes of the present invention may be used in any suitable procedure involving any paranasal sinus and/or nasal cavity. In further alternative embodiments, endoscopes of the present application may be used in procedures involving other portions of ear, nose or throat anatomy, such as but not limited to Eustachian tube procedures such as dilation and/or stent placement, repair of cranio-facial fractures, airway procedures such as subglottic stenosis dilation, tonsillectomy, adenoidectomy and/or the like.

[0098] As shown in FIG. **26**A, in one embodiment a swing prism endoscope **10** may be inserted into a nostril N of a human or animal subject with the viewing angle of the scope adjusted to approximately 0 degrees (i.e., a straight ahead view), as demonstrated by the ray lines **1024**. In alternative embodiments, the endoscope **10** may not be capable of viewing at 0 degrees but may be capable of between about 5 degrees and about 10 degrees as the most "straight ahead" angle. In either case, the physician may advance the endoscope **10** through the nasal cavity **1009** using the straight ahead view, moving toward, for example, a paranasal sinus ostium **1020**, such as an ostium of a maxillary, frontal, sphenoid or ethmoid sinus. FIG. **26**B shows endoscope **10** in a more advanced location. At some point during or after advancing endoscope **10**, the physician may adjust the swing prism of scope **30** to change its viewing angle, for example to look in the direction of ostium **1020**. In one embodiment, endoscope **10** includes an automatic focusing element, so that as the swing prism is adjusted and the viewing angle changed, endoscope **10** automatically refocuses. After viewing ostium **1020**, the physician may decide to leave the viewing angle the same or make further adjustments to view different anatomy, an additional device inserted into the paranasal anatomy, and/or the like. In some embodiments, at any point during a procedure, a physician may be able to lock the viewing angle of endoscope **10** at a desired angle. When withdrawing the device from the human or animal subject's nostril, the physician may again adjust the swing prism viewing angle back to 0 degrees or may leave the angle as it was during any part of the procedure. Such a method, or any of a number of variations thereof, allows a physician to view anatomy of a nasal cavity **1009**, paranasal sinus ostium **1020** and/or paranasal sinus **1022**, as well as one or more surgical devices, during a procedure without having to switch out multiple different endoscopes or to remove tissue to look around corners.

[0099] FIGS. **27**A through **27**D are illustrations of partial sagittal sectional views through a human head showing various steps of a method for viewing and treating an ostium of a paranasal sinus, which in this example is a sphenoid sinus. In FIG. **27**A, the swing prism endoscope **10** is introduced through a N nostril and through a nasal cavity **1012** to a location close to an ostium **1014** of a sphenoid sinus **1016**. The endoscope is used to view surrounding anatomy using a first, straight ahead viewing angle (or approximately straight ahead, such as between about 5 degrees and about 10 degrees angled from the endoscope longitudinal axis).

[0100] In FIG. **27**B, the angle of view of the endoscope **10** is altered to view an ostium **1014** of a sinus **1016**. In an alternative embodiment, one or more therapeutic or diagnostic devices may be advanced into the nasal cavity **1012** before the angle of view of the endoscope **10** is adjusted. In fact, the endoscope **10** may generally be advanced, adjusted, removed and the like in conjunction with any additional device(s) in any suitable order or manner as desired.

[0101] As shown in FIG. **27**C, in one embodiment, a guide catheter **212** may next be advanced into the nasal cavity **1012**, in some cases but not necessarily preloaded with a guidewire **110** and/or a balloon catheter. The guidewire **110** may then be advanced out of the distal end of the guide catheter **212** such that it passes through the sinus ostium **1014** and into the sphenoid sinus **1016**. A working device **1006**, such as a bal-

Questions? Contact FDA/CDRH/OCE/DID at CDRH-FOISTATUS@fda.hhs.gov or 301-796-8118

Records processed under FOIA Request 2011-7650; Released 1/25/12

loon catheter, can be introduced over the guidewire **110**, through the guide catheter, to position an expandable member **213** such as an inflatable balloon, into the sinus ostium **1014**.

[0102] Thereafter, as shown in FIG. **27**D, working device **1006** is used to perform a diagnostic or therapeutic procedure. In this particular example, the procedure is dilation of the sphenoid sinus ostium **1014**, where the balloon of device **1006** is expanded to enlarge the ostium **1014**. After completion of the procedure, the sinus guide catheter **212**, guidewire **110** and working device **1006** are withdrawn and removed. The entire procedure can be observed using the swing prism endoscope **10**.

[0103] The features of the present disclosure may also be used to dilate or modify any sinus ostium or other man-made or naturally occurring anatomical opening or passageway within the nose, paranasal sinuses, nasopharynx or adjacent areas. In this or any of the procedures described in this patent application, the operator may additionally advance other types of catheters, and guidewire **110**, guide catheter **212** or both may be steerable (e.g. torquable, actively deformable) or shapeable or malleable. Additionally, in various alternative embodiments, the endoscope **10** and one or more other devices, such as a guide catheter **212**, may be integrated. In one embodiment, for example, a guide catheter **212** may include an endoscope lumen through which the endoscope **10** may pass.

[0104] The scope **30** may be useful to reduce or eliminate the need for fluoroscopic visualization during placement of a sinus guide and/or for visualization of the procedure performed by working device **1006**. Being configured with a swing prism providing a one hundred sixty five degree viewing field, it can provide the capability to see an opening into a paranasal sinus and possibly even inside the sinus itself, and thus the endoscope may provide sufficient visual feedback for use in guiding guidewire **110** into the desired sinus.

[0105] FIG. **28** shows one embodiment of a sinus guide system **210** which can be used with the swing prism endoscope **10** of the present disclosure. Sinus guide **212** may be straight, malleable, or it may incorporate one or more preformed curves or bends as further described above, as well as in U.S. Patent Publication Nos. 2006/004323; 2006/0063973; and 2006/0095066, for example, each of which are incorporated herein, in their entireties, by reference thereto. In embodiments where sinus guide **212** is curved or bent, the deflection angle of the curve or bend may be in the range of up to about 135 degrees. This sinus guide system **210** comprises a sinus guide **212** and a camera/transmission/endoscope assembly **214**. This embodiment of the sinus guide **212** is shown in more detail in FIGS. **30**A-**30**C. As shown, this sinus guide **212** comprises a sinus guide body **226** and an endoscope channel **228** in generally side-by-side arrangement. As previously described, the swing prism endoscope **10** may be inserted separately from the sinus guide system **210**. In certain applications, however, the endoscope **10** also can be inserted through the endoscope channel **228**. Accordingly, the system **210** can also lack an endoscope channel **228**. In either approach, the swing prism endoscope can be connected to a camera/transmission assembly and to a console **234** including a monitor **236** and video recorder **240**.

[0106] The sinus guide body **226** can embody a tube **244** having a lumen **245** (e.g., see FIG. **30**B), such as a polymer tube made of biocompatible polymeric material. Optionally, a liner **246** (FIG. **30**B) may be disposed within the lumen **245** of the tube **244**. Such liner may be formed of lubricious or smooth material such as polytetrafluoroethylene (PTFE). Also, optionally, a proximal portion of the tube **244** may be surrounded by an outer tube member **242** formed of material such as stainless steel hypotube. In the embodiment shown, a distal portion of the tube **244** extends out of and beyond the distal end of outer tube **242**. This protruding distal portion of the tube **244** may be straight or curved. Also, it may be pre-formed at the time of manufacture or malleable to a desired shape at the time of use. When intended for use in accessing the ostium of a paranasal sinus, the distal portion of tube **244** may be curved to form an angle A from about 0 degrees to about 120 degrees. For example, a series of sinus guides **212** having angles A of 0, 30, 70, 90 and 110 degrees may be provided thereby allowing the physician to select the sinus guide angle A that is most appropriate for the particular paranasal sinus ostium to be accessed.

[0107] Additionally, in some embodiments, a rotation grip **260** may be positioned about a proximal portion of the sinus guide **210**, as seen in FIGS. **28**, **30**A and **30**B. This rotation grip **260** may have a smooth or textured round outer surface (e.g., it may be a cylindrical tube) that may be grasped between the fingers of the operator's hand and easily rotated, thereby facilitating rotation (e.g., rolling) of the sinus guide **212** as it is being used. Such rotation of the sinus guide **212** may be desirable for a number of reasons including but not limited to positioning of the distal end of the sinus guide **212** at a desired location.

[0108] In the event it is desirable to configure the sinus guide system with an endoscope channel, it is contemplated that the channel **228** may comprise any structure (e.g., tube, track, groove, rail, etc.) capable of guiding the advancement of a flexible endoscope. In the particular examples shown in these figures, the endoscope channel **228** comprises a tube (e.g., a polymer tube) having a lumen **229** extending therethrough. In the embodiment seen in FIGS. **28**-**30**C, the endoscope channel **228** is attached to and extends along substantially the entire length of the sinus guide body **226**. In another embodiment, the endoscope channel **228** can be inside the sinus guide body **226**. In other embodiments, the endoscope channel **228** may be interrupted, non-continuous or may extend over less than the entire length of the sinus guide body **226**. An outer skin **240** may be heat shrunk or otherwise disposed around the sinus guide body **226** and endoscope channel **228** to hold the endoscope channel **228** at a desired position on the outer surface of the sinus guide body **226**. Alternatively, the endoscope channel **228** may be attached to the sinus guide body **226** at one or more locations by any other suitable attachment substance, apparatus or technique, including but not limited to adhesive, soldering, welding, heat fusion, coextrusion, banding, clipping, etc. The particular circumferential location of the endoscope channel **228** can be important in some applications, particularly when the sinus guide body **226** includes a curve formed in its distal portion **244**. In this regard, for some applications, the endoscope channel **228** may be affixed at a particular circumferential location on the sinus guide body **226** to allow an endoscope **10** inserted through the endoscope channel **228** to provide a view from a desired or optimal vantage point, without obstruction from adjacent anatomical structures. It is also to be recognized that a second endoscope (not shown) distinct from the above described swing prism endoscope and which incorporates a swing prism or otherwise defines flexible structure can be inserted through the endoscope channel.

920

Questions? Contact FDA/CDRH/OCE/DID at CDRH-FOISTATUS@fda.hhs.gov or 301-796-8118

Records processed under FOIA Request 2011-7650; Released 1/25/12

[0109] Again referring to FIGS. 28-30C, a proximal Y connector **241** may be attached to the proximal end of the sinus guide **212**. A first arm **243***b* of this Y connector comprises a female Luer fitting that is connected to the lumen **245** of the sinus guide body **226**. The other arm **243***a* is a female Luer fitting that is connected to the lumen **229** of the endoscope channel **226**.

[0110] A camera/cable/endoscope assembly **214** is attachable to arm **243***a*. In the particular embodiment shown in FIGS. **28** and **31**, the camera/cable/endoscope assembly **214** comprises an adjustable scope/lock extension **216**, a camera **220** and a monitor cable **224**. The scope body **30** can be advanced through the scope/lock extension **216** and through the lumen **229** of the endoscope channel **228**. As shown in FIG. **29**, the light cable **250** and monitor cable **224** may be connected to console **234** that houses a monitor **236**, light source **238** and video recorder **240**. Alternatively, the endoscope **10** can be directly connected to a console **234** separate from the sinus guide system **212**.

[0111] The invention has been described hereabove with reference to certain examples or embodiments of the invention, but various additions, deletions, alterations and modifications may be made to these examples and embodiments and or equivalents may be substituted without departing from the intended spirit and scope of the invention. For example, any element or attribute of one embodiment or example may be incorporated into or used with another embodiment or example, unless to do so would render the embodiment or example unsuitable for its intended use. In addition, many modifications may be made to adapt a particular situation, material, composition of matter, process, process step or steps, to the objective, spirit and scope of the present invention. All such modifications are intended to be within the scope of the claims appended hereto.

What is claimed:

1. A method for advancing a therapeutic device into or through an opening or passageway into a paranasal sinus, the method comprising:

introducing a variable direction of view endoscope into a nasal cavity with the endoscope adjusted to a first direction of view between about 0 degrees and about 15 degrees relative to a longitudinal axis of the endoscope;

introducing a therapeutic device into the nasal cavity;

adjusting the endoscope to a second direction of view directed toward the sinus opening or passageway;

advancing the therapeutic device into or through the sinus opening; and

viewing at least one of the sinus opening or passageway or the therapeutic device using the endoscope adjusted to the second direction of view.

2. The method of claim **1**, wherein the therapeutic device comprises a balloon dilation catheter and wherein the method further comprises dilating a balloon of the catheter to expand the opening or passageway into the paranasal sinus.

3. The method of claim **1**, further comprising introducing a guide catheter into the nasal cavity, wherein the therapeutic device comprises a flexible device and advancing the therapeutic device comprises advancing the device through a lumen of the guide catheter into or through the paranasal sinus opening.

4. The method of claim **3**, wherein the flexible device comprises a balloon dilation catheter.

5. The method of claim **4**, further comprising advancing a guidewire through the lumen of the guide catheter and into the paranasal sinus before advancing the balloon catheter over the guidewire and through the guide catheter to position a balloon of the catheter in the sinus opening.

6. The method of claim **5**, wherein the guidewire comprises a lighted guidewire having an illuminating distal end, and wherein the method further comprises transilluminating the paranasal sinus while the illuminating distal end is located in the sinus.

7. The method of claim **1**, wherein the therapeutic device comprises an irrigation catheter, and wherein the method further comprises irrigating the paranasal sinus using the irrigation catheter, wherein at least one aperture of the irrigation catheter is located within the sinus.

8. The method of claim **1**, wherein the therapeutic device comprises a drug delivery reservoir that is implanted in at least one of the sinus or the opening or passageway into the sinus.

9. The method of claim **1**, wherein the paranasal sinus opening comprises a maxillary sinus ostium.

10. The method of claim **1**, wherein the paranasal sinus opening comprises at least one of a frontal sinus ostium or a frontal sinus outflow tract.

11. The method of claim **1**, wherein the paranasal sinus opening comprises a sphenoid sinus ostium.

12. The method of claim **1**, wherein the paranasal sinus opening comprises a natural or man made opening of an ethmoid sinus.

13. The method of claim **1**, further comprising adjusting the endoscope to the first direction of view or to a third direction of view to view at least one of the therapeutic device or anatomy of the nasal cavity.

14. A method for advancing a flexible device into an opening or passageway into a paranasal sinus, the method comprising:

introducing a variable direction of view endoscope into a nasal cavity with the endoscope adjusted to a first direction of view between about 0 degrees and about 15 degrees relative to a longitudinal axis of the endoscope;

introducing a guide catheter into the nasal cavity to position a distal tip of the catheter within or near a paranasal sinus opening or passageway;

adjusting the endoscope to a second direction of view directed toward the sinus opening or passageway;

advancing a flexible device through a lumen of the guide catheter and into or through the sinus opening; and

viewing at least one of the sinus opening or passageway or the flexible device using the endoscope adjusted to the second direction of view.

15. The method of claim **14**, wherein the endoscope comprises a swing prism endoscope, and wherein adjusting the direction of view comprises rotating a prism of the endoscope.

16. The method of claim **14**, wherein the guide catheter is introduced before the direction of view of the endoscope is adjusted.

17. The method of claim **14**, wherein direction of view of the endoscope is adjusted before the guide catheter is introduced.

18. The method of claim **14**, wherein advancing the flexible device comprises advancing a guidewire through a paranasal sinus ostium into the paranasal sinus.

921

Questions? Contact FDA/CDRH/OCE/DID at CDRH-FOISTATUS@fda.hhs.gov or 301-796-8118

Records processed under FOIA Request 2011-7650; Released 1/25/12

19. The method of claim 18, further comprising:
advancing a balloon catheter over the guidewire to position a balloon of the balloon catheter at least partially within the sinus ostium; and
expanding the balloon to dilate the sinus ostium.

20. The method of claim 14, wherein advancing the flexible device comprises advancing an irrigation catheter through the opening into the paranasal sinus, the method further comprising irrigating the paranasal sinus using the irrigation catheter.

21. The method of claim 14, wherein advancing the flexible device comprises advancing an illuminating wire through the opening into the paransal sinus, the method further comprising:
transmitting light from a distal end of the illuminating wire disposed in the paranasal sinus; and
viewing the transmitted light from outside the sinus.

22. A method for viewing anatomy in a head of a human or animal subject, the method comprising:
introducing a variable degree of view endoscope into the subject's head with the endoscope adjusted to a first degree of view;
viewing anatomy in the head using the endoscope with the first degree of view;
rotating a first portion of a handle of the endoscope about a longitudinal axis of the endoscope to adjust the endoscope to a second degree of view, wherein the first portion of the handle rotates relative to a shaft of the endoscope; and
viewing anatomy in the head using the endoscope with the second degree of view.

23. The method of claim 22, further comprising rotating a second portion of the handle about the longitudinal axis to rotate the shaft of the endoscope without rotating the rest of the handle.

24. The method of claim 23, further comprising rotating the first portion of the handle to adjust the endoscope to the first degree of view or to a third degree of view.

25. The method of claim 22, wherein introducing the endoscope comprises passing the endoscope into a nasal cavity, and wherein the viewed anatomy is selected from the group consisting of nasal cavity anatomy, an opening or passageway into a paranasal sinus ostium, a paranasal sinus, a Eustachian tube opening, an oral cavity, a nasopharynx, a throat, a larynx, and a trachea.

26. The method of claim 22, further comprising viewing a direction of view indicator on the endoscope indicating the direction of view in which the endoscope is pointing.

27. The method of claim 22, further comprising viewing at least one medical or surgical device introduced into the subject's head.

28. A variable direction of view endoscope configured to pass into a head of a human or animal subject, the endoscope comprising:
an elongate shaft having a proximal end, a distal end, and an outer diameter of no more than approximately 5 mm;
a viewing window disposed along the shaft at or near its distal end;
a pivotable prism disposed in the shaft near the distal end to change a direction of view of the endoscope; and
a self-focusing lens disposed in the shaft, configured to automatically focus the view acquired through the viewing window as the prism pivots.

29. The endoscope of claim 28, wherein the viewing window extends from the distal end of the shaft proximally along one side of the shaft.

30. The endoscope of claim 28, wherein a field of view of the endoscope is between approximately 60 degrees and approximately 70 degrees.

31. The endoscope of claim 28, wherein the endoscope is compatible with 300 Watt Xenon light sources.

32. A variable direction of view endoscope configured to pass into a head of a human or animal subject, the endoscope comprising:
an elongate shaft having a proximal end, a distal end, and an outer diameter of no more than approximately 5 mm;
a viewing window disposed along the shaft at or near its distal end;
a pivotable prism disposed in the shaft near the distal end to change a direction of view of the endoscope; and
a handle coupled with the proximal end of the elongate shaft, wherein the handle comprises a first rotating dial for adjusting the viewing angle of the endoscope by pivoting the prism, wherein the first rotating dial rotates about a longitudinal axis of the shaft.

33. The endoscope of claim 32, wherein the handle further comprises a second rotating dial for rotating the shaft of the endoscope without rotating the rest of the handle.

34. The endoscope of claim 33, wherein the first and second dials are sealed to allow the endoscope to be sterilized in an autoclave without damaging the endoscope.

35. The endoscope of claim 32, wherein the first dial is coupled to the prism via a magnet drive mechanism.

36. The endoscope of claim 32, further comprising a self-focusing lens disposed in the shaft, configured to automatically focus the view acquired through the viewing window as the prism pivots.

37. The endoscope of claim 32, wherein the viewing window extends from the distal end of the shaft proximally along one side of the shaft.

38. The endoscope of claim 32, wherein a field of view of the endoscope is between approximately 60 degrees and approximately 70 degrees.

39. The endoscope of claim 32, wherein a direction of view of the endoscope ranges from between about 0 degrees to about 120 degrees.

40. The endoscope of claim 39, wherein a field of view of the endoscope ranges from between about 5 degrees to about 100 degrees.

41. The endoscope of claim 32, wherein the endoscope is compatible with 300 Watt Xenon light sources.

42. The endoscope of claim 32, further comprising a handle attachment for facilitating holding the handle.

* * * * *

Questions? Contact FDA/CDRH/OCE/DID at CDRH-FOISTATUS@fda.hhs.gov or 301-796-8118

Records processed under FOIA Request 2011-7650; Released 1/25/12

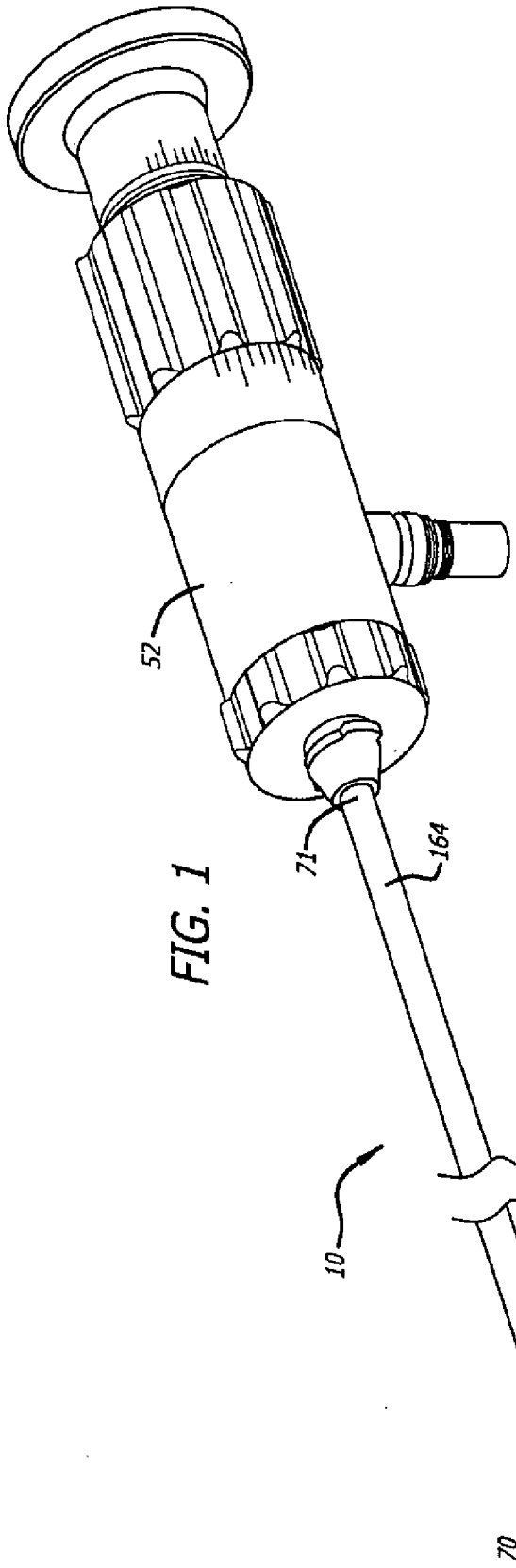

FIG. 1

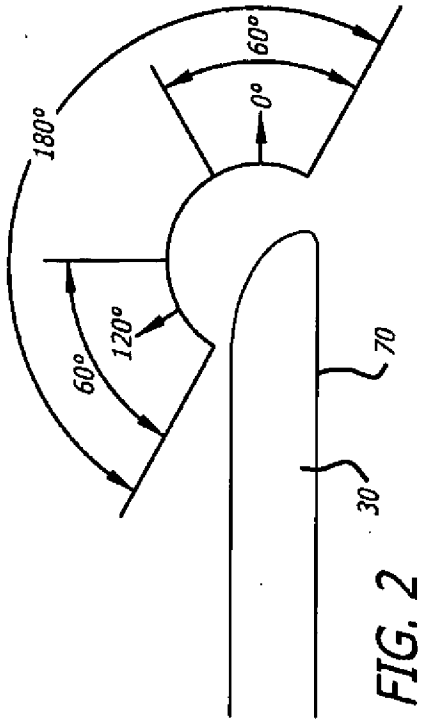

FIG. 2

923

Records processed under FOIA Request 2011-7650; Released 1/25/12

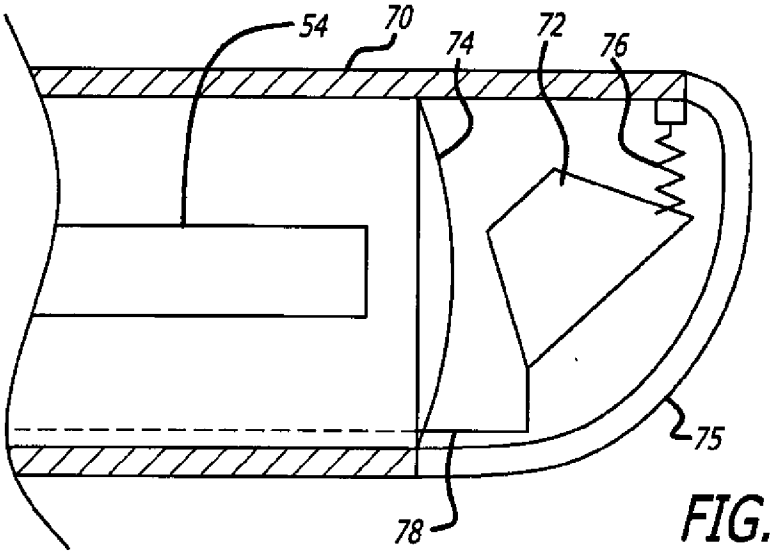

FIG. 3

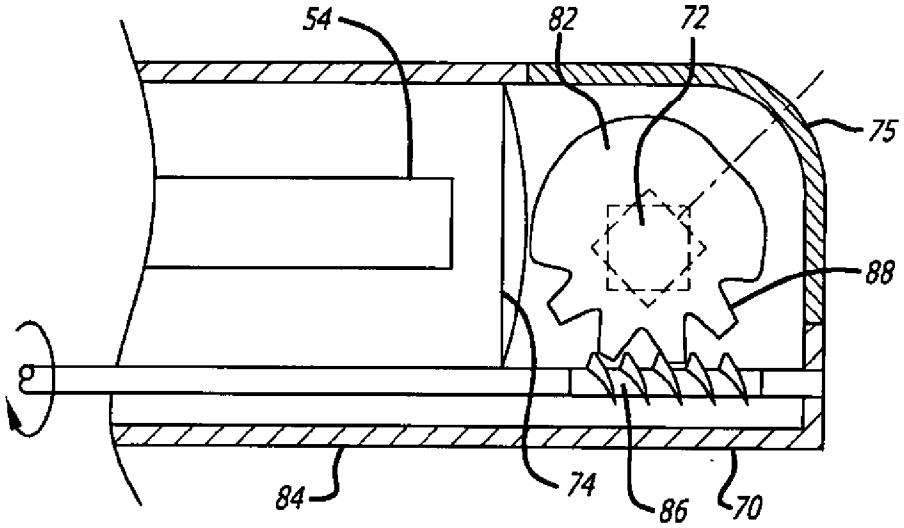

FIG. 4

Questions? Contact FDA/CDRH/OCE/DID at CDRH-FOISTATUS@fda.hhs.gov or 301-796-8118

Records processed under FOIA Request 2011-7650; Released 1/25/12

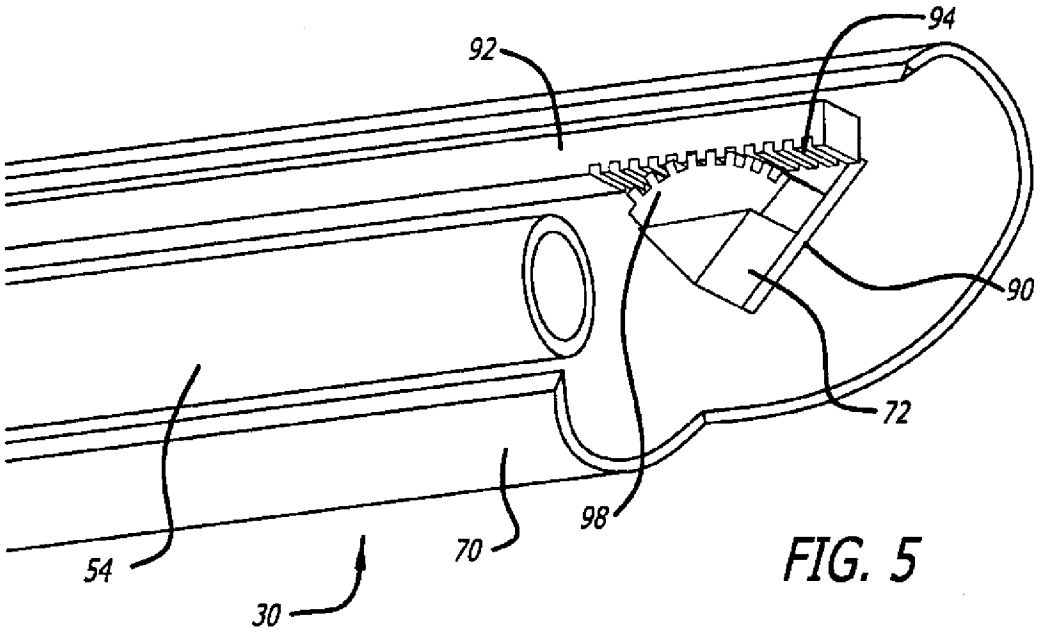

FIG. 5

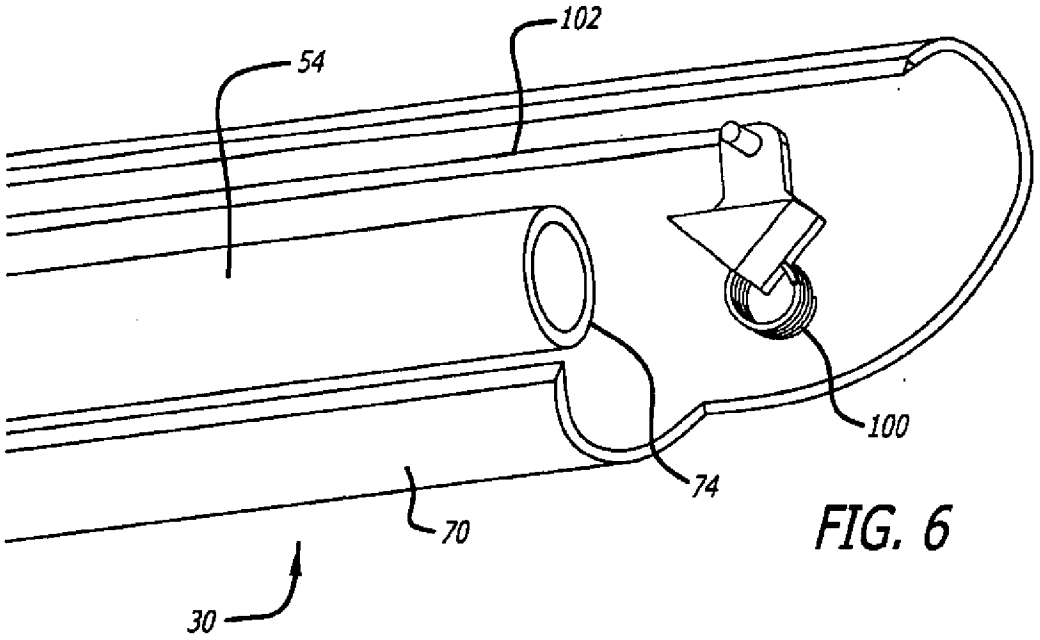

FIG. 6

Questions? Contact FDA/CDRH/OCE/DID at CDRH-FOISTATUS@fda.hhs.gov or 301-796-8118

925

Records processed under FOIA Request 2011-7650; Released 1/25/12

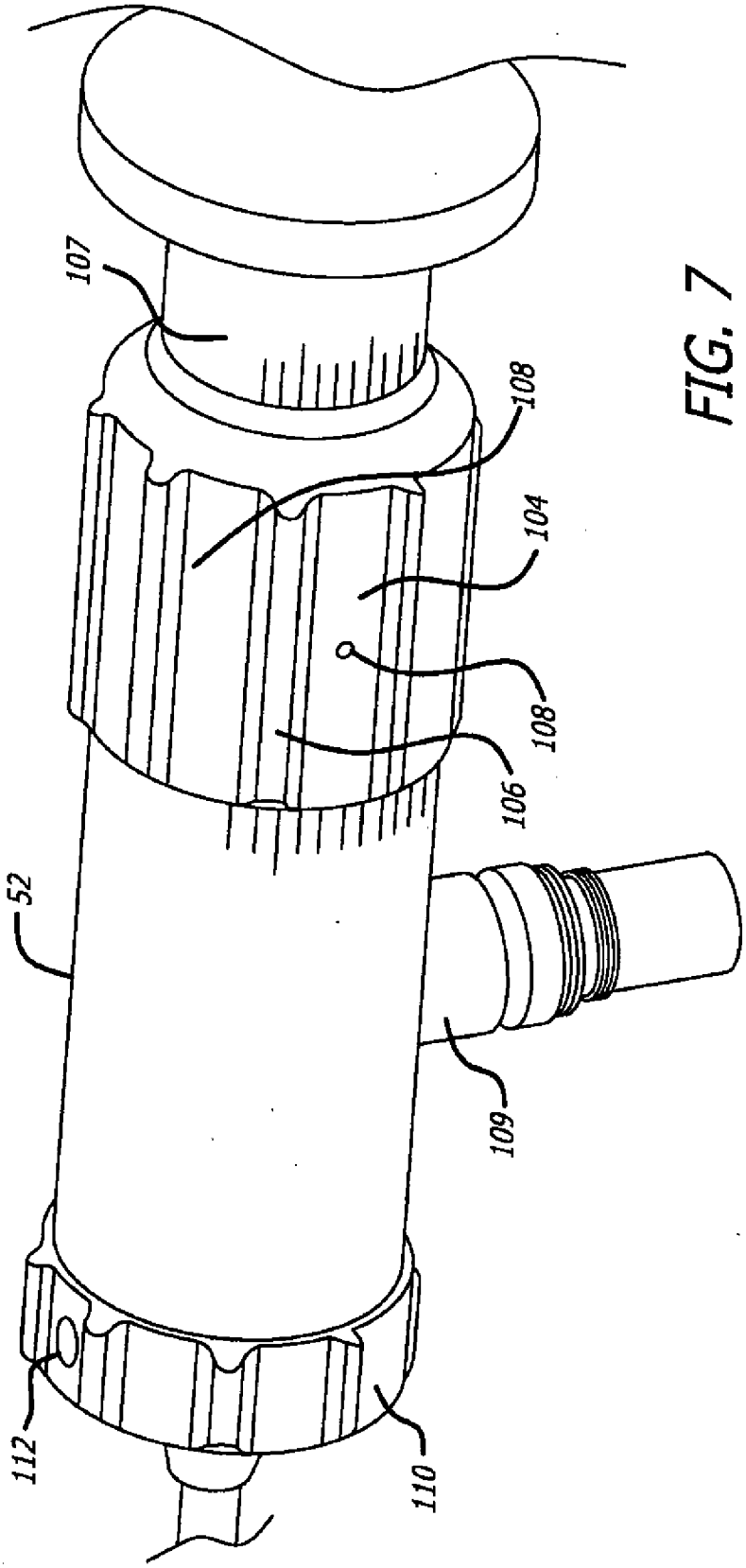

FIG. 7

Questions? Contact FDA/CDRH/OCE/DID at CDRH-FOISTATUS@fda.hhs.gov or 301-796-8118

Records processed under FOIA Request 2011-7650; Released 1/25/12

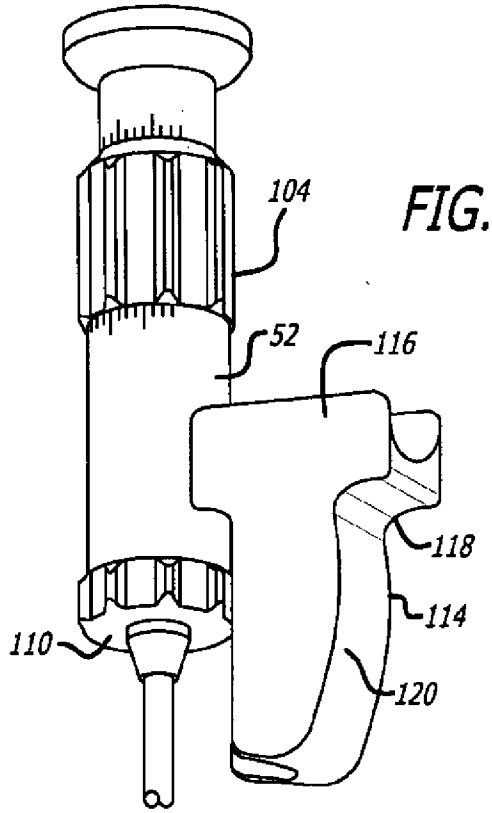

FIG. 8

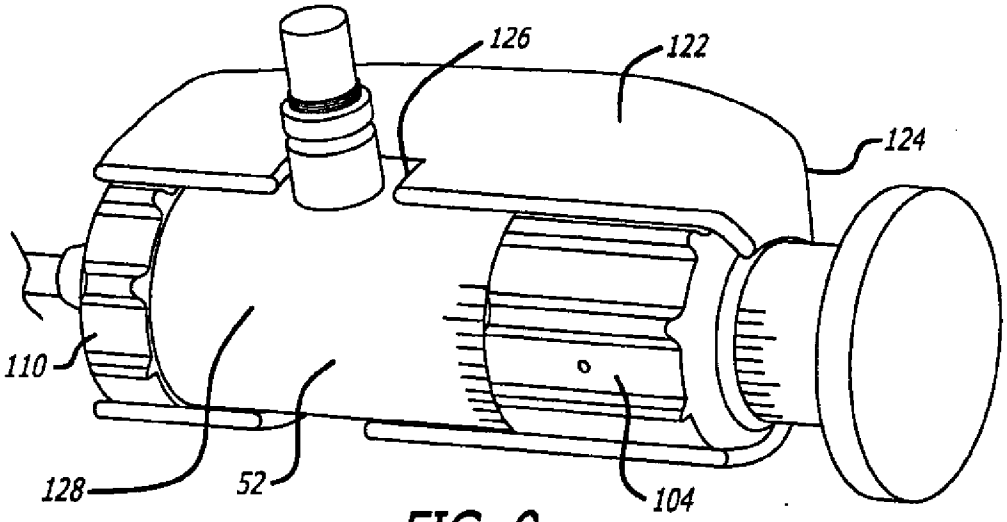

FIG. 9

Questions? Contact FDA/CDRH/OCE/DID at CDRH-FOISTATUS@fda.hhs.gov or 301-796-8118

Records processed under FOIA Request 2011-7650; Released 1/25/12

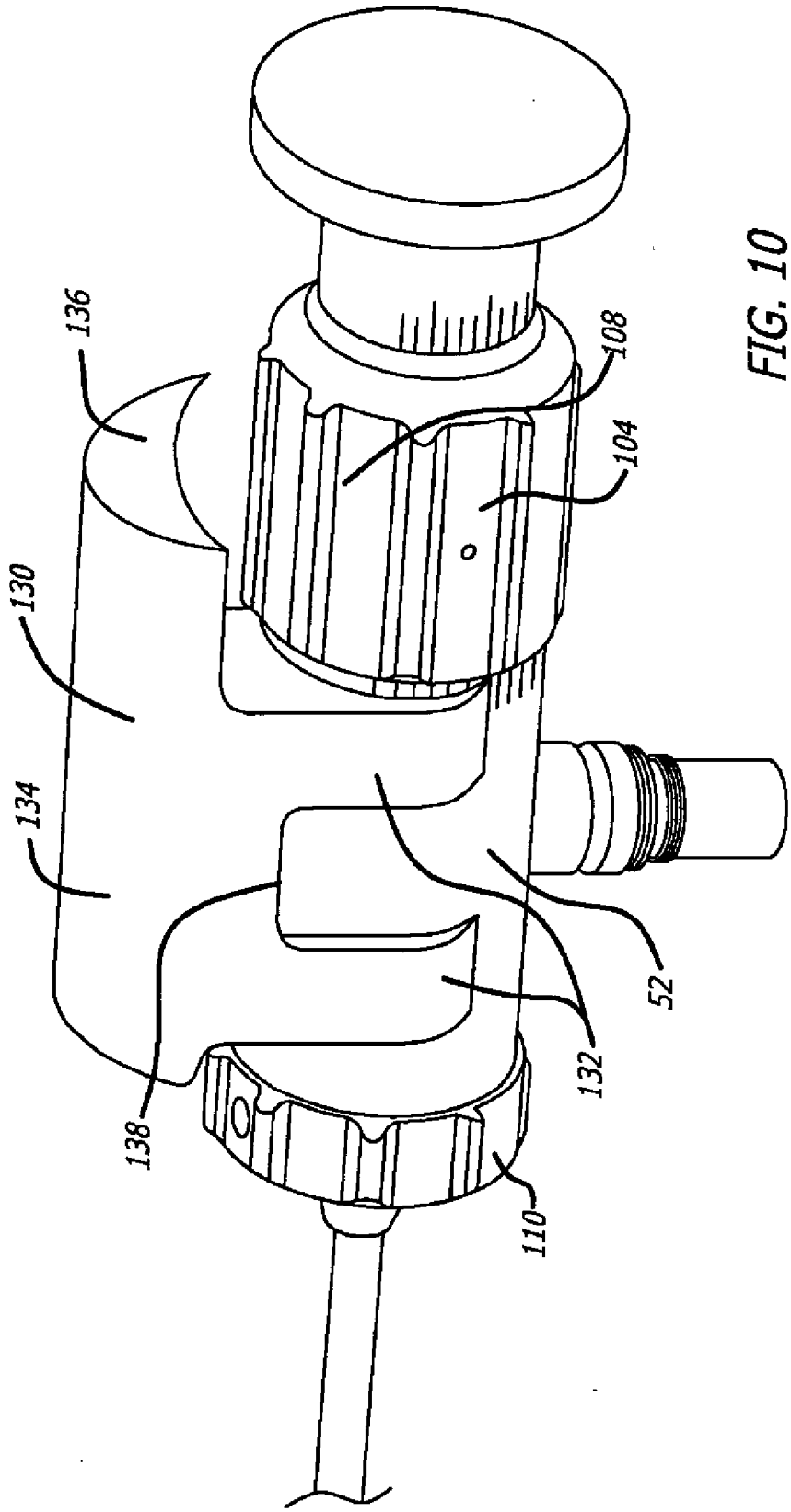

FIG. 10

928

Questions? Contact FDA/CDRH/OCE/DID at CDRH-FOISTATUS@fda.hhs.gov or 301-796-8118

Records processed under FOIA Request 2011-7650; Released 1/25/12

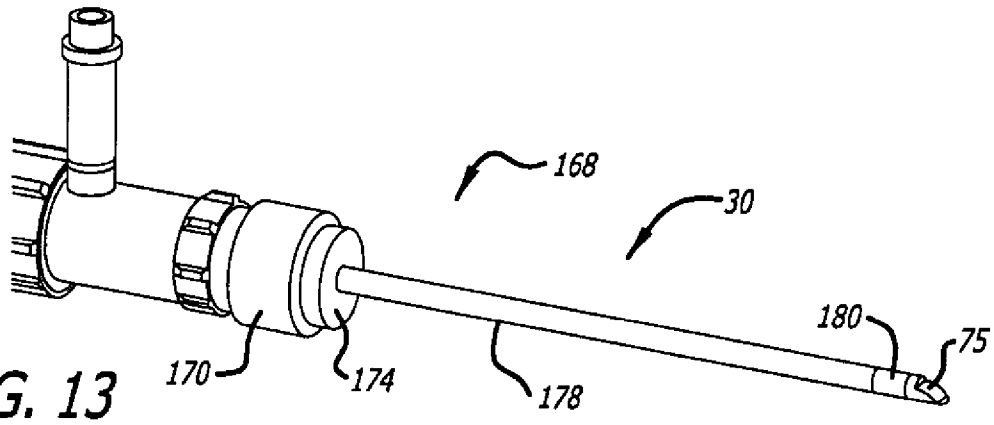

FIG. 13

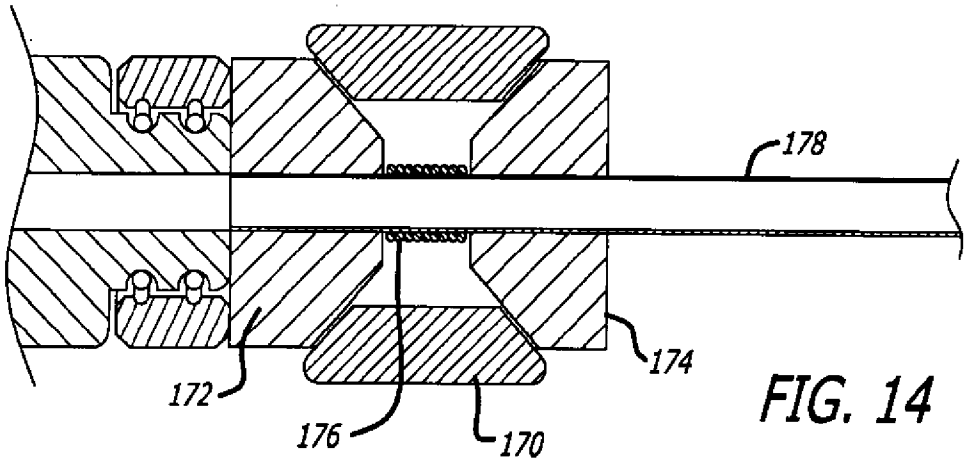

FIG. 14

Questions? Contact FDA/CDRH/OCE/DID at CDRH-FOISTATUS@fda.hhs.gov or 301-796-8118

Records processed under FOIA Request 2011-7650; Released 1/25/12

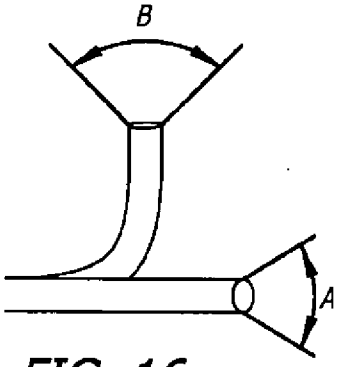

FIG. 16

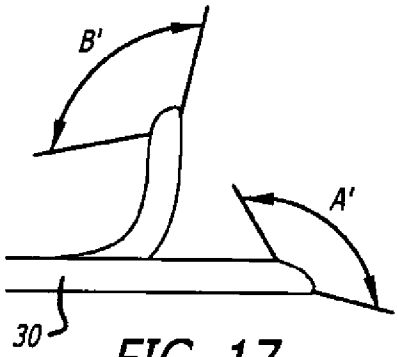

FIG. 17

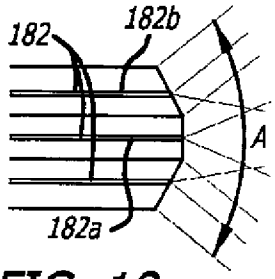

FIG. 18

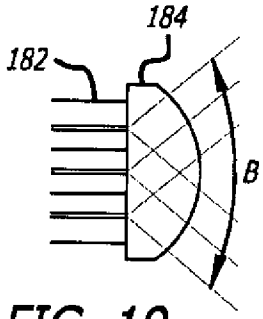

FIG. 19

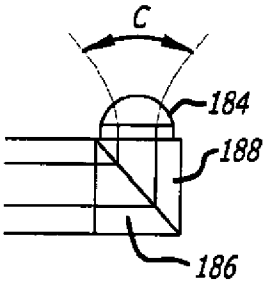

FIG. 20

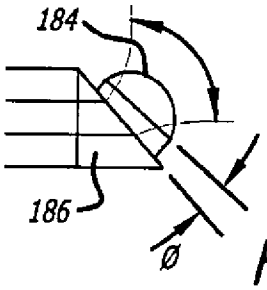

FIG. 21

930

Questions? Contact FDA/CDRH/OCE/DID at CDRH-FOISTATUS@fda.hhs.gov or 301-796-8118

Records processed under FOIA Request 2011-7650; Released 1/25/12

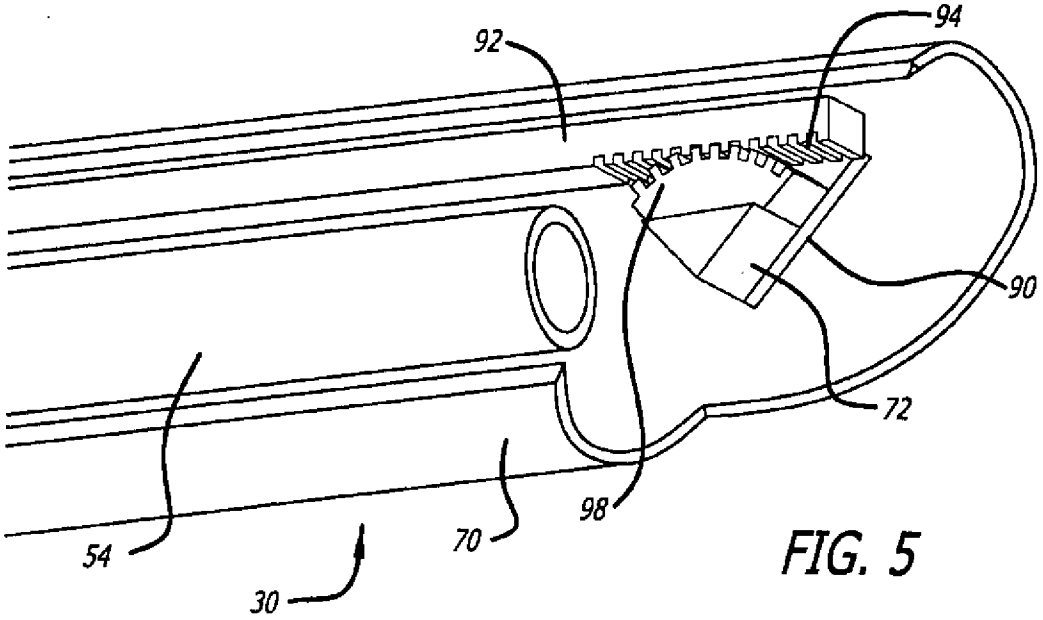

FIG. 5

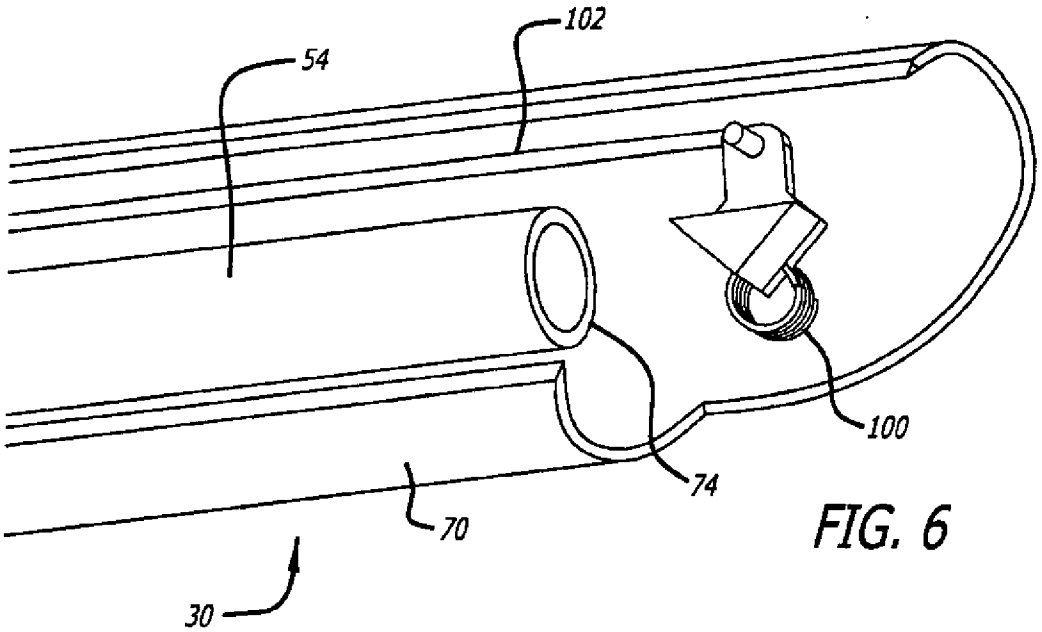

FIG. 6

Questions? Contact FDA/CDRH/OCE/DID at CDRH-FOISTATUS@fda.hhs.gov or 301-796-8118

(b)(4),Testing Data

Records processed under FOIA Request 2011-7650; Released 1/25/12

Questions? Contact FDA/CDRH/OCE/DID at CDRH-FOISTATUS@fda.hhs.gov or 301-796-8118

(b)(4),Testing Data

Records processed under FOIA Request 2011-7650; Released 1/25/12

Questions? Contact FDA/CDRH/OCE/DID at CDRH-FOISTATUS@fda.hhs.gov or 301-796-8118

(b)(4),Testing Data

Records processed under FOIA Request 2011-7650; Released 1/25/12

Questions? Contact FDA/CDRH/OCE/DID at CDRH-FOISTATUS@fda.hhs.gov or 301-796-8118

(b)(4),Testing Data

Records processed under FOIA Request 2011-7650; Released 1/25/12

Questions? Contact FDA/CDRH/OCE/DID at CDRH-FOISTATUS@fda.hhs.gov or 301-796-8118

(b)(4),Testing Data

Records processed under FOIA Request 2011-7650; Released 1/25/12

Questions? Contact FDA/CDRH/OCE/DID at CDRH-FOISTATUS@fda.hhs.gov or 301-796-8118

(b)(4),Testing Data

Records processed under FOIA Request 2011-7650; Released 1/25/12

Questions? Contact FDA/CDRH/OCE/DID at CDRH-FOISTATUS@fda.hhs.gov or 301-796-8118

(b)(4),Testing Data

Records processed under FOIA Request 2011-7650; Released 1/25/12

Questions? Contact FDA/CDRH/OCE/DID at CDRH-FOISTATUS@fda.hhs.gov or 301-796-8118

(b)(4),Testing Data

Records processed under FOIA Request 2011-7650; Released 1/25/12

Questions? Contact FDA/CDRH/OCE/DID at CDRH-FOISTATUS@fda.hhs.gov or 301-796-8118

Records processed under FOIA Request 2011-7650; Released 1/25/12

Acclarent

K100577/S1

Acclarent, Inc.
1525-B O'Brien Drive
Menlo Park, CA 94025

Main 650.687.5888
Fax 650.687.5889
www.acclarent.com

June 30, 2010

Ms. Susan Rudy, MSN, CRNP, CORLN
Food and Drug Administration
Center for Devices and Radiological Health
Document Mail Center—WO66-G609
10903 New Hampshire Avenue
Silver Spring, MD 20993-0002

FDA CDRH Date
JUL - 1 2010
Received

RE: Response to K100577 AI Letter: Acclarent Cyclops Multi-Angle Endoscope

Dear Ms. Rudy:

Thank you for reviewing our traditional 510(k) submission for the Acclarent Cyclops Multi-Angle Endoscope (Cyclops) noted above. (b)(4)
(b)(4)

Acclarent is also providing an electronic copy of this submission, which is an exact duplicate per the guidance set forth by FDA.

Acclarent, Inc regards the contents of this submission to be proprietary commercial information entitled to the full confidentiality safeguards of 21 CFR Parts 20.45, 20.61 and 807.95(b).

If you have any questions regarding this submission, please do not hesitate to contact me by phone (650) 687-5874, fax (650) 687-4449 or by email at kyen@acclarent.com. Alternatively, you may contact Mike Handley by phone (650) 687-5424 or by email at mike.handley@acclarent.com. Thank you.

Sincerely,

Keri Yen
Regulatory Affairs Manager

K-28

Questions? Contact FDA/CDRH/OCE/DID at CDRH-FOISTATUS@fda.hhs.gov or 301-796-8118

Records processed under FOIA Request 2011-7650; Released 1/25/12

Acclarent

Acclarent, Inc.
1525-B O'Brien Drive
Menlo Park, CA 94025

Main 650.687.5888
Fax 650.687.5889
www.acclarent.com

June 30, 2010

Ms. Susan Rudy, MSN, CRNP, CORLN
Food and Drug Administration
Center for Devices and Radiological Health
Document Mail Center—WO66-G609
10903 New Hampshire Avenue
Silver Spring, MD 20993-0002

RE: Response to K100577 AI Letter: Acclarent Cyclops Multi-Angle Endoscope

Dear Ms. Rudy:

Thank you for reviewing our traditional 510(k) submission for the Acclarent Cyclops Multi-Angle Endoscope (Cyclops) noted above. (b)(4)
(b)(4)

Acclarent is also providing an electronic copy of this submission, which is an exact duplicate per the guidance set forth by FDA.

Acclarent, Inc regards the contents of this submission to be proprietary commercial information entitled to the full confidentiality safeguards of 21 CFR Parts 20.45, 20.61 and 807.95(b).

If you have any questions regarding this submission, please do not hesitate to contact me by phone (650) 687-5874, fax (650) 687-4449 or by email at kyen@acclarent.com. Alternatively, you may contact Mike Handley by phone (650) 687-5424 or by email at mike.handley@acclarent.com. Thank you.

Sincerely,

Keri Yen
Regulatory Affairs Manager

FOI - Page 622 of 1276
Questions? Contact FDA/CDRH/OCE/DID at CDRH-FOISTATUS@fda.hhs.gov or 301-796-8118

(b)(4),Design Specifications

Records processed under FOIA Request 2011-7650; Released 1/25/12

Questions? Contact FDA/CDRH/OCE/DID at CDRH-FOISTATUS@fda.hhs.gov or 301-796-8118

(b)(4),Design Specifications

Records processed under FOIA Request 2011-7650; Released 1/25/12

Questions? Contact FDA/CDRH/OCE/DID at CDRH-FOISTATUS@fda.hhs.gov or 301-796-8118

(b)(4),Design Specifications

Records processed under FOIA Request 2011-7650; Released 1/25/12

Questions? Contact FDA/CDRH/OCE/DID at CDRH-FOISTATUS@fda.hhs.gov or 301-796-8118

(b)(4),Design Specifications

Records processed under FOIA Request 2011-7650; Released 1/25/12

Questions? Contact FDA/CDRH/OCE/DID at CDRH-FOISTATUS@fda.hhs.gov or 301-796-8118

(b)(4),Design Specifications

Records processed under FOIA Request 2011-7650; Released 1/25/12

Questions? Contact FDA/CDRH/OCE/DID at CDRH-FOISTATUS@fda.hhs.gov or 301-796-8118

(b)(4),Design Specifications

Records processed under FOIA Request 2011-7650; Released 1/25/12

Questions? Contact FDA/CDRH/OCE/DID at CDRH-FOISTATUS@fda.hhs.gov or 301-796-8118

(b)(4),Design Specifications

Records processed under FOIA Request 2011-7650; Released 1/25/12

Questions? Contact FDA/CDRH/OCE/DID at CDRH-FOISTATUS@fda.hhs.gov or 301-796-8118

(b)(4),Design Specifications

Records processed under FOIA Request 2011-7650; Released 1/25/12

Questions? Contact FDA/CDRH/OCE/DID at CDRH-FOISTATUS@fda.hhs.gov or 301-796-8118

(b)(4),Design Specifications

Records processed under FOIA Request 2011-7650; Released 1/25/12

Questions? Contact FDA/CDRH/OCE/DID at CDRH-FOISTATUS@fda.hhs.gov or 301-796-8118

(b)(4),Design Specifications

Records processed under FOIA Request 2011-7650; Released 1/25/12

Questions? Contact FDA/CDRH/OCE/DID at CDRH-FOISTATUS@fda.hhs.gov or 301-796-8118

(b)(4),Design Specifications

Records processed under FOIA Request 2011-7650; Released 1/25/12

Questions? Contact FDA/CDRH/OCE/DID at CDRH-FOISTATUS@fda.hhs.gov or 301-796-8118

(b)(4),Design Specifications

Records processed under FOIA Request 2011-7650; Released 1/25/12

Questions? Contact FDA/CDRH/OCE/DID at CDRH-FOISTATUS@fda.hhs.gov or 301-796-8118

(b)(4),Design Specifications

Records processed under FOIA Request 2011-7650; Released 1/25/12

Questions? Contact FDA/CDRH/OCE/DID at CDRH-FOISTATUS@fda.hhs.gov or 301-796-8118

(b)(4),Design Specifications

Records processed under FOIA Request 2011-7650; Released 1/25/12

Questions? Contact FDA/CDRH/OCE/DID at CDRH-FOISTATUS@fda.hhs.gov or 301-796-8118

(b)(4),Design Specifications

Records processed under FOIA Request 2011-7650; Released 1/25/12

Questions? Contact FDA/CDRH/OCE/DID at CDRH-FOISTATUS@fda.hhs.gov or 301-796-8118

(b)(4),Design Specifications

Records processed under FOIA Request 2011-7650; Released 1/25/12

Questions? Contact FDA/CDRH/OCE/DID at CDRH-FOISTATUS@fda.hhs.gov or 301-796-8118

(b)(4),Design Specifications

Records processed under FOIA Request 2011-7650; Released 1/25/12

Questions? Contact FDA/CDRH/OCE/DID at CDRH-FOISTATUS@fda.hhs.gov or 301-796-8118

(b)(4),Design Specifications

Records processed under FOIA Request 2011-7650; Released 1/25/12

Questions? Contact FDA/CDRH/OCE/DID at CDRH-FOISTATUS@fda.hhs.gov or 301-796-8118

(b)(4),Design Specifications

Records processed under FOIA Request 2011-7650; Released 1/25/12

Questions? Contact FDA/CDRH/OCE/DID at CDRH-FOISTATUS@fda.hhs.gov or 301-796-8118

(b)(4),Design Specifications

Records processed under FOIA Request 2011-7650; Released 1/25/12

Questions? Contact FDA/CDRH/OCE/DID at CDRH-FOISTATUS@fda.hhs.gov or 301-796-8118

(b)(4),Design Specifications

Records processed under FOIA Request 2011-7650; Released 1/25/12

Questions? Contact FDA/CDRH/OCE/DID at CDRH-FOISTATUS@fda.hhs.gov or 301-796-8118

(b)(4),Design Specifications

Records processed under FOIA Request 2011-7650; Released 1/25/12

Questions? Contact FDA/CDRH/OCE/DID at CDRH-FOISTATUS@fda.hhs.gov or 301-796-8118

(b)(4),Design Specifications

Records processed under FOIA Request 2011-7650; Released 1/25/12

Questions? Contact FDA/CDRH/OCE/DID at CDRH-FOISTATUS@fda.hhs.gov or 301-796-8118

(b)(4),Design Specifications

Records processed under FOIA Request 2011-7650; Released 1/25/12

Questions? Contact FDA/CDRH/OCE/DID at CDRH-FOISTATUS@fda.hhs.gov or 301-796-8118

(b)(4),Design Specifications

Records processed under FOIA Request 2011-7650; Released 1/25/12

Questions? Contact FDA/CDRH/OCE/DID at CDRH-FOISTATUS@fda.hhs.gov or 301-796-8118

(b)(4),Design Specifications

Records processed under FOIA Request 2011-7650; Released 1/25/12

Questions? Contact FDA/CDRH/OCE/DID at CDRH-FOISTATUS@fda.hhs.gov or 301-796-8118

(b)(4),Design Specifications

Records processed under FOIA Request 2011-7650; Released 1/25/12

Questions? Contact FDA/CDRH/OCE/DID at CDRH-FOISTATUS@fda.hhs.gov or 301-796-8118

(b)(4),Design Specifications

Records processed under FOIA Request 2011-7650; Released 1/25/12

Questions? Contact FDA/CDRH/OCE/DID at CDRH-FOISTATUS@fda.hhs.gov or 301-796-8118

Records processed under FOIA Request 2011-7650; Released 1/25/12

Questions? Contact FDA/CDRH/OCE/DID at CDRH-FOISTATUS@fda.hhs.gov or 301-796-8118

Records processed under FOIA Request 2011-7650; Released 1/25/12

Questions? Contact FDA/CDRH/OCE/DID at CDRH-FOISTATUS@fda.hhs.gov or 301-796-8118

Records processed under FOIA Request 2011-7650; Released 1/25/12

Questions? Contact FDA/CDRH/OCE/DID at CDRH-FOISTATUS@fda.hhs.gov or 301-796-8118

Records processed under FOIA Request 2011-7650; Released 1/25/12

Questions? Contact FDA/CDRH/OCE/DID at CDRH-FOISTATUS@fda.hhs.gov or 301-796-8118

Records processed under FOIA Request 2011-7650; Released 1/25/12

Questions? Contact FDA/CDRH/OCE/DID at CDRH-FOISTATUS@fda.hhs.gov or 301-796-8118

Records processed under FOIA Request 2011-7650; Released 1/25/12

Questions? Contact FDA/CDRH/OCE/DID at CDRH-FOISTATUS@fda.hhs.gov or 301-796-8118

Records processed under FOIA Request 2011-7650; Released 1/25/12

Questions? Contact FDA/CDRH/OCE/DID at CDRH-FOISTATUS@fda.hhs.gov or 301-796-8118

Records processed under FOIA Request 2011-7650; Released 1/25/12

Questions? Contact FDA/CDRH/OCE/DID at CDRH-FOISTATUS@fda.hhs.gov or 301-796-8118

Records processed under FOIA Request 2011-7650; Released 1/25/12

Questions? Contact FDA/CDRH/OCE/DID at CDRH-FOISTATUS@fda.hhs.gov or 301-796-8118

Records processed under FOIA Request 2011-7650; Released 1/25/12

Questions? Contact FDA/CDRH/OCE/DID at CDRH-FOISTATUS@fda.hhs.gov or 301-796-8118

Records processed under FOIA Request 2011-7650; Released 1/25/12

Questions? Contact FDA/CDRH/OCE/DID at CDRH-FOISTATUS@fda.hhs.gov or 301-796-8118

(b)(4),Testing Data

Records processed under FOIA Request 2011-7650; Released 1/25/12

Questions? Contact FDA/CDRH/OCE/DID at CDRH-FOISTATUS@fda.hhs.gov or 301-796-8118

(b)(4),Testing Data

Records processed under FOIA Request 2011-7650; Released 1/25/12

Questions? Contact FDA/CDRH/OCE/DID at CDRH-FOISTATUS@fda.hhs.gov or 301-796-8118

(b)(4),Testing Data

Records processed under FOIA Request 2011-7650; Released 1/25/12

Questions? Contact FDA/CDRH/OCE/DID at CDRH-FOISTATUS@fda.hhs.gov or 301-796-8118

(b)(4),Testing Data

Records processed under FOIA Request 2011-7650; Released 1/25/12

Questions? Contact FDA/CDRH/OCE/DID at CDRH-FOISTATUS@fda.hhs.gov or 301-796-8118

(b)(4),Testing Data

Records processed under FOIA Request 2011-7650; Released 1/25/12

Questions? Contact FDA/CDRH/OCE/DID at CDRH-FOISTATUS@fda.hhs.gov or 301-796-8118

(b)(4),Testing Data

Records processed under FOIA Request 2011-7650; Released 1/25/12

Questions? Contact FDA/CDRH/OCE/DID at CDRH-FOISTATUS@fda.hhs.gov or 301-796-8118

(b)(4),Testing Data

Records processed under FOIA Request 2011-7650; Released 1/25/12

Questions? Contact FDA/CDRH/OCE/DID at CDRH-FOISTATUS@fda.hhs.gov or 301-796-8118

(b)(4),Testing Data

Records processed under FOIA Request 2011-7650; Released 1/25/12

Questions? Contact FDA/CDRH/OCE/DID at CDRH-FOISTATUS@fda.hhs.gov or 301-796-8118

(b)(4),Testing Data

Records processed under FOIA Request 2011-7650; Released 1/25/12

Questions? Contact FDA/CDRH/OCE/DID at CDRH-FOISTATUS@fda.hhs.gov or 301-796-8118

(b)(4),Testing Data

Records processed under FOIA Request 2011-7650; Released 1/25/12

Questions? Contact FDA/CDRH/OCE/DID at CDRH-FOISTATUS@fda.hhs.gov or 301-796-8118

Records processed under FOIA Request 2011-7650; Released 1/25/12

Questions? Contact FDA/CDRH/OCE/DID at CDRH-FOISTATUS@fda.hhs.gov or 301-796-8118

(b)(4),Testing Data

Records processed under FOIA Request 2011-7650; Released 1/25/12

Questions? Contact FDA/CDRH/OCE/DID at CDRH-FOISTATUS@fda.hhs.gov or 301-796-8118

(b)(4),Testing Data

Records processed under FOIA Request 2011-7650; Released 1/25/12

Questions? Contact FDA/CDRH/OCE/DID at CDRH-FOISTATUS@fda.hhs.gov or 301-796-8118

(b)(4),Testing Data

Records processed under FOIA Request 2011-7650; Released 1/25/12

Questions? Contact FDA/CDRH/OCE/DID at CDRH-FOISTATUS@fda.hhs.gov or 301-796-8118

(b)(4),Testing Data

Records processed under FOIA Request 2011-7650; Released 1/25/12

Questions? Contact FDA/CDRH/OCE/DID at CDRH-FOISTATUS@fda.hhs.gov or 301-796-8118

(b)(4),Testing Data

Records processed under FOIA Request 2011-7650; Released 1/25/12

Questions? Contact FDA/CDRH/OCE/DID at CDRH-FOISTATUS@fda.hhs.gov or 301-796-8118

(b)(4),Testing Data

Records processed under FOIA Request 2011-7650; Released 1/25/12

Questions? Contact FDA/CDRH/OCE/DID at CDRH-FOISTATUS@fda.hhs.gov or 301-796-8118

(b)(4),Testing Data

Records processed under FOIA Request 2011-7650; Released 1/25/12

Questions? Contact FDA/CDRH/OCE/DID at CDRH-FOISTATUS@fda.hhs.gov or 301-796-8118

(b)(4),Testing Data

Records processed under FOIA Request 2011-7650; Released 1/25/12

Questions? Contact FDA/CDRH/OCE/DID at CDRH-FOISTATUS@fda.hhs.gov or 301-796-8118

(b)(4),Testing Data

Records processed under FOIA Request 2011-7650; Released 1/25/12

Questions? Contact FDA/CDRH/OCE/DID at CDRH-FOISTATUS@fda.hhs.gov or 301-796-8118

(b)(4),Testing Data

Records processed under FOIA Request 2011-7650; Released 1/25/12

Questions? Contact FDA/CDRH/OCE/DID at CDRH-FOISTATUS@fda.hhs.gov or 301-796-8118

(b)(4),Testing Data

Records processed under FOIA Request 2011-7650; Released 1/25/12

Questions? Contact FDA/CDRH/OCE/DID at CDRH-FOISTATUS@fda.hhs.gov or 301-796-8118

(b)(4),Testing Data

Records processed under FOIA Request 2011-7650; Released 1/25/12

Questions? Contact FDA/CDRH/OCE/DID at CDRH-FOISTATUS@fda.hhs.gov or 301-796-8118

(b)(4),Testing Data

Records processed under FOIA Request 2011-7650; Released 1/25/12

Questions? Contact FDA/CDRH/OCE/DID at CDRH-FOISTATUS@fda.hhs.gov or 301-796-8118

Records processed under FOIA Request 2011-7650; Released 1/25/12

Questions? Contact FDA/CDRH/OCE/DID at CDRH-FOISTATUS@fda.hhs.gov or 301-796-8118

(b)(4),Testing Data

Records processed under FOIA Request 2011-7650; Released 1/25/12

Questions? Contact FDA/CDRH/OCE/DID at CDRH-FOISTATUS@fda.hhs.gov or 301-796-8118

(b)(4),Testing Data

Records processed under FOIA Request 2011-7650; Released 1/25/12

Questions? Contact FDA/CDRH/OCE/DID at CDRH-FOISTATUS@fda.hhs.gov or 301-796-8118

(b)(4),Testing Data

Records processed under FOIA Request 2011-7650; Released 1/25/12

Questions? Contact FDA/CDRH/OCE/DID at CDRH-FOISTATUS@fda.hhs.gov or 301-796-8118

(b)(4),Testing Data

Records processed under FOIA Request 2011-7650; Released 1/25/12

Questions? Contact FDA/CDRH/OCE/DID at CDRH-FOISTATUS@fda.hhs.gov or 301-796-8118

(b)(4),Testing Data

Records processed under FOIA Request 2011-7650; Released 1/25/12

Questions? Contact FDA/CDRH/OCE/DID at CDRH-FOISTATUS@fda.hhs.gov or 301-796-8118

(b)(4),Testing Data

Records processed under FOIA Request 2011-7650; Released 1/25/12

Questions? Contact FDA/CDRH/OCE/DID at CDRH-FOISTATUS@fda.hhs.gov or 301-796-8118

Records processed under FOIA Request 2011-7650; Released 1/25/12

Form Approved: OMB No. 0910-0120; Expiration Date: 8/31/10

Department of Health and Human Services
Food and Drug Administration

STANDARDS DATA REPORT FOR 510(k)s

(To be filled in by applicant)

(b)(4)

[1] The formatting convention for the title is: [SDO] [numeric identifier] [title of standard] [date of publication]

[2] Authority [21 U.S.C. 360d], www.fda.gov/cdrh/stdsprog.html

[3] http://www.accessdata.fda.gov/scripts/cdrh/cfdocs/cfStandards/search.cfm

[4] The summary report should include: any adaptations used to adapt to the device under review (for example, alternative test methods); choices made when options or a selection of methods are described; deviations from the standard; requirements not applicable to the device; and the name and address of the test laboratory or certification body involved in conformance assessment to this standard. The summary report includes information on all standards utilized during the development of the device.

[5] The supplemental information sheet (SIS) is additional information which is necessary before FDA recognizes the standard. Found at http://www.accessdata.fda.gov/scripts/cdrh/cfdocs/cfStandards/search.cfm

[6] The online search for CDRH Guidance Documents can be found at www.fda.gov/cdrh/guidance.html

FOI - Page 693 of 1276 Questions? Contact FDA/CDRH/OCE/DID at CDRH-FOISTATUS@fda.hhs.gov or 301-796-8118

(b)(4),Technical Information-CCI
Records processed under FOIA Request 2011-7650; Released 1/25/12

Questions? Contact FDA/CDRH/OCE/DID at CDRH-FOISTATUS@fda.hhs.gov or 301-796-8118

(b)(4),Technical Information-CCI
Records processed under FOIA Request 2011-7650; Released 1/25/12

Questions? Contact FDA/CDRH/OCE/DID at CDRH-FOISTATUS@fda.hhs.gov or 301-796-8118

(b)(4),Technical Information-CCI
Records processed under FOIA Request 2011-7650; Released 1/25/12

Questions? Contact FDA/CDRH/OCE/DID at CDRH-FOISTATUS@fda.hhs.gov or 301-796-8118

(b)(4),Technical Information-CCI
Records processed under FOIA Request 2011-7650; Released 1/25/12

Questions? Contact FDA/CDRH/OCE/DID at CDRH-FOISTATUS@fda.hhs.gov or 301-796-8118

(b)(4),Technical Information-CCI
Records processed under FOIA Request 2011-7650; Released 1/25/12

Questions? Contact FDA/CDRH/OCE/DID at CDRH-FOISTATUS@fda.hhs.gov or 301-796-8118

(b)(4),Technical Information-CCI
Records processed under FOIA Request 2011-7650; Released 1/25/12

Questions? Contact FDA/CDRH/OCE/DID at CDRH-FOISTATUS@fda.hhs.gov or 301-796-8118

(b)(4),Technical Information-CCI
Records processed under FOIA Request 2011-7650; Released 1/25/12

Questions? Contact FDA/CDRH/OCE/DID at CDRH-FOISTATUS@fda.hhs.gov or 301-796-8118

(b)(4),Technical Information-CCI
Records processed under FOIA Request 2011-7650; Released 1/25/12

Questions? Contact FDA/CDRH/OCE/DID at CDRH-FOISTATUS@fda.hhs.gov or 301-796-8118

(b)(4),Technical Information-CCI
Records processed under FOIA Request 2011-7650; Released 1/25/12

Questions? Contact FDA/CDRH/OCE/DID at CDRH-FOISTATUS@fda.hhs.gov or 301-796-8118

(b)(4),Technical Information-CCI
Records processed under FOIA Request 2011-7650; Released 1/25/12

Questions? Contact FDA/CDRH/OCE/DID at CDRH-FOISTATUS@fda.hhs.gov or 301-796-8118

(b)(4),Technical Information-CCI
Records processed under FOIA Request 2011-7650; Released 1/25/12

Questions? Contact FDA/CDRH/OCE/DID at CDRH-FOISTATUS@fda.hhs.gov or 301-796-8118

(b)(4),Technical Information-CCI
Records processed under FOIA Request 2011-7650; Released 1/25/12

Questions? Contact FDA/CDRH/OCE/DID at CDRH-FOISTATUS@fda.hhs.gov or 301-796-8118

(b)(4),Technical Information-CCI
Records processed under FOIA Request 2011-7650; Released 1/25/12

Questions? Contact FDA/CDRH/OCE/DID at CDRH-FOISTATUS@fda.hhs.gov or 301-796-8118

(b)(4),Technical Information-CCI
Records processed under FOIA Request 2011-7650; Released 1/25/12

Questions? Contact FDA/CDRH/OCE/DID at CDRH-FOISTATUS@fda.hhs.gov or 301-796-8118

(b)(4),Technical Information-CCI
Records processed under FOIA Request 2011-7650; Released 1/25/12

Questions? Contact FDA/CDRH/OCE/DID at CDRH-FOISTATUS@fda.hhs.gov or 301-796-8118

(b)(4),Technical Information-CCI
Records processed under FOIA Request 2011-7650; Released 1/25/12

Questions? Contact FDA/CDRH/OCE/DID at CDRH-FOISTATUS@fda.hhs.gov or 301-796-8118

(b)(4),Technical Information-CCI
Records processed under FOIA Request 2011-7650; Released 1/25/12

Questions? Contact FDA/CDRH/OCE/DID at CDRH-FOISTATUS@fda.hhs.gov or 301-796-8118

(b)(4),Technical Information-CCI
Records processed under FOIA Request 2011-7650; Released 1/25/12

Questions? Contact FDA/CDRH/OCE/DID at CDRH-FOISTATUS@fda.hhs.gov or 301-796-8118

(b)(4),Technical Information-CCI
Records processed under FOIA Request 2011-7650; Released 1/25/12

Questions? Contact FDA/CDRH/OCE/DID at CDRH-FOISTATUS@fda.hhs.gov or 301-796-8118

Records processed under FOIA Request 2011-7650; Released 1/25/12

(b)(4)

FOI - Page 713 of 1276
Questions? Contact FDA/CDRH/OCE/DID at CDRH-FOISTATUS@fda.hhs.gov or 301-796-8118

Records processed under FOIA Request 2011-7650; Released 1/25/12

K100577/S2

Acclarent

FDA CDRH DMC
DEC 02 2010
Received

December 1, 2010

Ms. Susan Rudy, MSN, CRNP, CORLN
Food and Drug Administration
Center for Devices and Radiological Health
Document Mail Center—WO66-G609
10903 New Hampshire Avenue
Silver Spring, MD 20993-0002

RE: Response to K100577/S001 AI Letter: Acclarent Cyclops Multi-Angle Endoscope

Dear Ms. Rudy:

Acclarent received FDA's questions dated July 27, 2010 for the above referenced 510(k) submission and hereby submits two copies of our response.

Acclarent thanks the Agency for the interactive conference call on August 19, 2010 with you, Drs. Nandkumar and Clupper, and Ms. Page, and the guidance that you provided. The conference call was helpful in understanding the Agency's concerns, specifically (b)(4)
(b)(4)
(b)(4)
(b)(4)
(b)(4) The revised indications for use for the subject device is:

> *The Acclarent Cyclops Multi-Angle Endoscope is intended to provide an endoscopic means to view the nasal cavity and nasopharynx in an operating room environment.*

Acclarent has re-submitted the Instructions for Use (**Appendix A**), 510(k) Summary (**Appendix B**), and Indications for Use Statement (**Appendix C**) to reflect this change.

Per the instructions accessed at 'Electronic Copies for Pre-Market Submissions', an electronic copy is being provided with this submission, and it is an exact duplicate of the original paper submission.

Acclarent, Inc regards the contents of this submission to be proprietary commercial information entitled to the full confidentiality safeguards of 21 CFR Parts 20.45, 20.61 and 807.95(b).

Questions? Contact FDA/CDRH/OCE/DID at CDRH-FOISTATUS@fda.hhs.gov or 301-796-8118

Records processed under FOIA Request 2011-7650; Released 1/25/12

If you have any questions regarding this submission, please do not hesitate to contact me by phone (650) 687-5874, fax (650) 687-4449 or by email at kyen@acclarent.com. Alternatively, you may contact Mike Handley by phone (650) 687-5424 or by email at mike.handley@acclarent.com. Thank you for your time and consideration.

Sincerely,

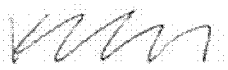

Keri Yen
Regulatory Affairs Manager

Questions? Contact FDA/CDRH/OCE/DID at CDRH-FOISTATUS@fda.hhs.gov or 301-796-8118

Records processed under FOIA Request 2011-7650; Released 1/25/12

Acclarent

December 1, 2010

Ms. Susan Rudy, MSN, CRNP, CORLN
Food and Drug Administration
Center for Devices and Radiological Health
Document Mail Center—WO66-G609
10903 New Hampshire Avenue
Silver Spring, MD 20993-0002

RE: Response to K100577/S001 AI Letter: Acclarent Cyclops Multi-Angle Endoscope

Dear Ms. Rudy:

Acclarent received FDA's questions dated July 27, 2010 for the above referenced 510(k) submission and hereby submits two copies of our response.

Acclarent thanks the Agency for the interactive conference call on August 19, 2010 with you, Drs. Nandkumar and Clupper, and Ms. Page, and the guidance that you provided. The conference call was helpful in understanding the Agency's concerns, specifically (b)(4)
(b)(4)
(b)(4)
(b)(4)
(b)(4) The revised indications for use for the subject device is:

> *The Acclarent Cyclops Multi-Angle Endoscope is intended to provide an endoscopic means to view the nasal cavity and nasopharynx in an operating room environment.*

Acclarent has re-submitted the Instructions for Use (**Appendix A**), 510(k) Summary (**Appendix B**), and Indications for Use Statement (**Appendix C**) to reflect this change.

Per the instructions accessed at 'Electronic Copies for Pre-Market Submissions', an electronic copy is being provided with this submission, and it is an exact duplicate of the original paper submission.

Acclarent, Inc regards the contents of this submission to be proprietary commercial information entitled to the full confidentiality safeguards of 21 CFR Parts 20.45, 20.61 and 807.95(b).

FOI - Page 716 of 1276 Please contact FDA/CDRH/OCE/DID at CDRH-FOISTATUS@fda.hhs.gov or 301-796-8118

Records processed under FOIA Request 2011-7650; Released 1/25/12

If you have any questions regarding this submission, please do not hesitate to contact me by phone (650) 687-5874, fax (650) 687-4449 or by email at kyen@acclarent.com. Alternatively, you may contact Mike Handley by phone (650) 687-5424 or by email at mike.handley@acclarent.com. Thank you for your time and consideration.

Sincerely,

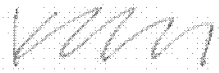

Keri Yen
Regulatory Affairs Manager

FOI - Page 717 of 1276 To request contact FDA/CDRH/OCE/DID at CDRH-FOISTATUS@fda.hhs.gov or 301-796-8118

(b)(4),(b)(5),Technical Information-CCI
Records processed under FOIA Request 2011-7650; Released 1/25/12

Questions? Contact FDA/CDRH/OCE/DID at CDRH-FOISTATUS@fda.hhs.gov or 301-796-8118

(b)(4),(b)(5),Technical Information-CCI
Records processed under FOIA Request 2011-7650; Released 1/25/12

Questions? Contact FDA/CDRH/OCE/DID at CDRH-FOISTATUS@fda.hhs.gov or 301-796-8118

(b)(4),(b)(5),Technical Information-CCI
Records processed under FOIA Request 2011-7650; Released 1/25/12

Questions? Contact FDA/CDRH/OCE/DID at CDRH-FOISTATUS@fda.hhs.gov or 301-796-8118

(b)(4),(b)(5),Technical Information-CCI
Records processed under FOIA Request 2011-7650; Released 1/25/12

Questions? Contact FDA/CDRH/OCE/DID at CDRH-FOISTATUS@fda.hhs.gov or 301-796-8118

(b)(4),(b)(5),Technical Information-CCI
Records processed under FOIA Request 2011-7650; Released 1/25/12

Questions? Contact FDA/CDRH/OCE/DID at CDRH-FOISTATUS@fda.hhs.gov or 301-796-8118

(b)(4),(b)(5),Technical Information-CCI
Records processed under FOIA Request 2011-7650; Released 1/25/12

Questions? Contact FDA/CDRH/OCE/DID at CDRH-FOISTATUS@fda.hhs.gov or 301-796-8118

(b)(4),(b)(5),Technical Information-CCI
Records processed under FOIA Request 2011-7650; Released 1/25/12

Questions? Contact FDA/CDRH/OCE/DID at CDRH-FOISTATUS@fda.hhs.gov or 301-796-8118

(b)(4),(b)(5),Technical Information-CCI
Records processed under FOIA Request 2011-7650; Released 1/25/12

Questions? Contact FDA/CDRH/OCE/DID at CDRH-FOISTATUS@fda.hhs.gov or 301-796-8118

(b)(4),(b)(5),Technical Information-CCI
Records processed under FOIA Request 2011-7650; Released 1/25/12

Questions? Contact FDA/CDRH/OCE/DID at CDRH-FOISTATUS@fda.hhs.gov or 301-796-8118

(b)(4),(b)(5),Technical Information-CCI
Records processed under FOIA Request 2011-7650; Released 1/25/12

Questions? Contact FDA/CDRH/OCE/DID at CDRH-FOISTATUS@fda.hhs.gov or 301-796-8118

(b)(4),(b)(5),Technical Information-CCI
Records processed under FOIA Request 2011-7650; Released 1/25/12

Questions? Contact FDA/CDRH/OCE/DID at CDRH-FOISTATUS@fda.hhs.gov or 301-796-8118

(b)(4),(b)(5),Technical Information-CCI
Records processed under FOIA Request 2011-7650; Released 1/25/12

Questions? Contact FDA/CDRH/OCE/DID at CDRH-FOISTATUS@fda.hhs.gov or 301-796-8118

(b)(4),(b)(5),Technical Information-CCI
Records processed under FOIA Request 2011-7650; Released 1/25/12

Questions? Contact FDA/CDRH/OCE/DID at CDRH-FOISTATUS@fda.hhs.gov or 301-796-8118

(b)(4),(b)(5),Technical Information-CCI
Records processed under FOIA Request 2011-7650; Released 1/25/12

Questions? Contact FDA/CDRH/OCE/DID at CDRH-FOISTATUS@fda.hhs.gov or 301-796-8118

(b)(4),(b)(5),Technical Information-CCI
Records processed under FOIA Request 2011-7650; Released 1/25/12

Questions? Contact FDA/CDRH/OCE/DID at CDRH-FOISTATUS@fda.hhs.gov or 301-796-8118

(b)(4),(b)(5),Technical Information-CCI
Records processed under FOIA Request 2011-7650; Released 1/25/12

Questions? Contact FDA/CDRH/OCE/DID at CDRH-FOISTATUS@fda.hhs.gov or 301-796-8118

(b)(4),(b)(5),Technical Information-CCI
Records processed under FOIA Request 2011-7650; Released 1/25/12

Questions? Contact FDA/CDRH/OCE/DID at CDRH-FOISTATUS@fda.hhs.gov or 301-796-8118

(b)(4),(b)(5),Technical Information-CCI
Records processed under FOIA Request 2011-7650; Released 1/25/12

Questions? Contact FDA/CDRH/OCE/DID at CDRH-FOISTATUS@fda.hhs.gov or 301-796-8118

(b)(4),(b)(5),Technical Information-CCI
Records processed under FOIA Request 2011-7650; Released 1/25/12

Questions? Contact FDA/CDRH/OCE/DID at CDRH-FOISTATUS@fda.hhs.gov or 301-796-8118

(b)(4),(b)(5),Technical Information-CCI
Records processed under FOIA Request 2011-7650; Released 1/25/12

Questions? Contact FDA/CDRH/OCE/DID at CDRH-FOISTATUS@fda.hhs.gov or 301-796-8118

(b)(4),(b)(5),Technical Information-CCI
Records processed under FOIA Request 2011-7650; Released 1/25/12

Questions? Contact FDA/CDRH/OCE/DID at CDRH-FOISTATUS@fda.hhs.gov or 301-796-8118

Records processed under FOIA Request 2011-7650; Released 1/25/12

Questions? Contact FDA/CDRH/OCE/DID at CDRH-FOISTATUS@fda.hhs.gov or 301-796-8118

Records processed under FOIA Request 2011-7650; Released 1/25/12

Questions? Contact FDA/CDRH/OCE/DID at CDRH-FOISTATUS@fda.hhs.gov or 301-796-8118

Records processed under FOIA Request 2011-7650; Released 1/25/12

Questions? Contact FDA/CDRH/OCE/DID at CDRH-FOISTATUS@fda.hhs.gov or 301-796-8118

Records processed under FOIA Request 2011-7650; Released 1/25/12

Questions? Contact FDA/CDRH/OCE/DID at CDRH-FOISTATUS@fda.hhs.gov or 301-796-8118

Records processed under FOIA Request 2011-7650; Released 1/25/12

Questions? Contact FDA/CDRH/OCE/DID at CDRH-FOISTATUS@fda.hhs.gov or 301-796-8118

Records processed under FOIA Request 2011-7650; Released 1/25/12

Questions? Contact FDA/CDRH/OCE/DID at CDRH-FOISTATUS@fda.hhs.gov or 301-796-8118

Records processed under FOIA Request 2011-7650; Released 1/25/12

Questions? Contact FDA/CDRH/OCE/DID at CDRH-FOISTATUS@fda.hhs.gov or 301-796-8118

Records processed under FOIA Request 2011-7650; Released 1/25/12

Questions? Contact FDA/CDRH/OCE/DID at CDRH-FOISTATUS@fda.hhs.gov or 301-796-8118

Records processed under FOIA Request 2011-7650; Released 1/25/12

Questions? Contact FDA/CDRH/OCE/DID at CDRH-FOISTATUS@fda.hhs.gov or 301-796-8118

Records processed under FOIA Request 2011-7650; Released 1/25/12

Questions? Contact FDA/CDRH/OCE/DID at CDRH-FOISTATUS@fda.hhs.gov or 301-796-8118

Records processed under FOIA Request 2011-7650; Released 1/25/12

Questions? Contact FDA/CDRH/OCE/DID at CDRH-FOISTATUS@fda.hhs.gov or 301-796-8118

Records processed under FOIA Request 2011-7650; Released 1/25/12

Questions? Contact FDA/CDRH/OCE/DID at CDRH-FOISTATUS@fda.hhs.gov or 301-796-8118

Records processed under FOIA Request 2011-7650; Released 1/25/12

Questions? Contact FDA/CDRH/OCE/DID at CDRH-FOISTATUS@fda.hhs.gov or 301-796-8118

Records processed under FOIA Request 2011-7650; Released 1/25/12

Questions? Contact FDA/CDRH/OCE/DID at CDRH-FOISTATUS@fda.hhs.gov or 301-796-8118

Records processed under FOIA Request 2011-7650; Released 1/25/12

Questions? Contact FDA/CDRH/OCE/DID at CDRH-FOISTATUS@fda.hhs.gov or 301-796-8118

Records processed under FOIA Request 2011-7650; Released 1/25/12

Questions? Contact FDA/CDRH/OCE/DID at CDRH-FOISTATUS@fda.hhs.gov or 301-796-8118

Records processed under FOIA Request 2011-7650; Released 1/25/12

Questions? Contact FDA/CDRH/OCE/DID at CDRH-FOISTATUS@fda.hhs.gov or 301-796-8118

Records processed under FOIA Request 2011-7650; Released 1/25/12

Questions? Contact FDA/CDRH/OCE/DID at CDRH-FOISTATUS@fda.hhs.gov or 301-796-8118

(b)(4),Draft Version

(b)(4),Draft Version

(b)(4),Draft Version

Records processed under FOIA Request 2011-7650; Released 1/25/12

EDITORIAL COMMENTARY

(b)(4)

Copyrighted Material

Questions? Contact FDA/CDRH/OCE/DID at CDRH-FOISTATUS@fda.hhs.gov or 301-796-8118

Copyrighted Material

Questions? Contact FDA/CDRH/OCE/DID at CDRH-FOISTATUS@fda.hhs.gov or 301-796-8118

Records processed under FOIA Request 2011-7650; Released 1/25/12

Questions? Contact FDA/CDRH/OCE/DID at CDRH-FOISTATUS@fda.hhs.gov or 301-796-8118

Records processed under FOIA Request 2011-7650; Released 1/25/12

(b)(4)

Copyrighted Material

1547-5271/$ -see front matter © 2009 Heart Rhythm Society. All rights reserved.

doi:10.1016/j.hrthm.2009.07.003

Questions? Contact FDA/CDRH/OCE/DID at CDRH-FOISTATUS@fda.hhs.gov or 301-796-8118

Copyrighted Material

Copyrighted Material

Copyrighted Material

Copyrighted Material

Records processed under FOIA Request 2011-7650; Released 1/25/12

Questions? Contact FDA/CDRH/OCE/DID at CDRH-FOISTATUS@fda.hhs.gov or 301-796-8118

Records processed under FOIA Request 2011-7650; Released 1/25/12

(b)(4)

(b)(4)

Copyrighted Material

Questions? Contact FDA/CDRH/OCE/DID at CDRH-FOISTATUS@fda.hhs.gov or 301-796-8118

Copyrighted Material

Copyrighted Material

Copyrighted Material

Records processed under FOIA Request 2011-7650; Released 1/25/12

Questions? Contact FDA/CDRH/OCE/DID at CDRH-FOISTATUS@fda.hhs.gov or 301-796-8118

(b)(4),Copyrighted Material
Records processed under FOIA Request 2011-7650; Released 1/25/12

Questions? Contact FDA/CDRH/OCE/DID at CDRH-FOISTATUS@fda.hhs.gov or 301-796-8118

(b)(4),Copyrighted Material
Records processed under FOIA Request 2011-7650; Released 1/25/12

Questions? Contact FDA/CDRH/OCE/DID at CDRH-FOISTATUS@fda.hhs.gov or 301-796-8118

(b)(4),Copyrighted Material
Records processed under FOIA Request 2011-7650; Released 1/25/12

Questions? Contact FDA/CDRH/OCE/DID at CDRH-FOISTATUS@fda.hhs.gov or 301-796-8118

(b)(4),Copyrighted Material
Records processed under FOIA Request 2011-7650; Released 1/25/12

Questions? Contact FDA/CDRH/OCE/DID at CDRH-FOISTATUS@fda.hhs.gov or 301-796-8118

(b)(4),Copyrighted Material
Records processed under FOIA Request 2011-7650; Released 1/25/12

Questions? Contact FDA/CDRH/OCE/DID at CDRH-FOISTATUS@fda.hhs.gov or 301-796-8118

(b)(4),Copyrighted Material
Records processed under FOIA Request 2011-7650; Released 1/25/12

Questions? Contact FDA/CDRH/OCE/DID at CDRH-FOISTATUS@fda.hhs.gov or 301-796-8118

(b)(4),Copyrighted Material
Records processed under FOIA Request 2011-7650; Released 1/25/12

Questions? Contact FDA/CDRH/OCE/DID at CDRH-FOISTATUS@fda.hhs.gov or 301-796-8118

(b)(4),Copyrighted Material
Records processed under FOIA Request 2011-7650; Released 1/25/12

Questions? Contact FDA/CDRH/OCE/DID at CDRH-FOISTATUS@fda.hhs.gov or 301-796-8118

(b)(4),Copyrighted Material
Records processed under FOIA Request 2011-7650; Released 1/25/12

Questions? Contact FDA/CDRH/OCE/DID at CDRH-FOISTATUS@fda.hhs.gov or 301-796-8118

(b)(4),Copyrighted Material
Records processed under FOIA Request 2011-7650; Released 1/25/12

Questions? Contact FDA/CDRH/OCE/DID at CDRH-FOISTATUS@fda.hhs.gov or 301-796-8118

(b)(4),Copyrighted Material
Records processed under FOIA Request 2011-7650; Released 1/25/12

Questions? Contact FDA/CDRH/OCE/DID at CDRH-FOISTATUS@fda.hhs.gov or 301-796-8118

(b)(4),Copyrighted Material
Records processed under FOIA Request 2011-7650; Released 1/25/12

Questions? Contact FDA/CDRH/OCE/DID at CDRH-FOISTATUS@fda.hhs.gov or 301-796-8118

(b)(4),Copyrighted Material
Records processed under FOIA Request 2011-7650; Released 1/25/12

Questions? Contact FDA/CDRH/OCE/DID at CDRH-FOISTATUS@fda.hhs.gov or 301-796-8118

Records processed under FOIA Request 2011-7650; Released 1/25/12

Questions? Contact FDA/CDRH/OCE/DID at CDRH-FOISTATUS@fda.hhs.gov or 301-796-8118

(b)(4)

Copyrighted Material

1547-5271/$ -see front matter © 2007 Heart Rhythm Society. All rights reserved.

doi:10.1016/j.hrthm.2006.09.012

Questions? Contact FDA/CDRH/OCE/DID at CDRH-FOISTATUS@fda.hhs.gov or 301-796-8118

Copyrighted Material

Copyrighted Material

Copyrighted Material

(b)(4),Testing Data

Records processed under FOIA Request 2011-7650; Released 1/25/12

Questions? Contact FDA/CDRH/OCE/DID at CDRH-FOISTATUS@fda.hhs.gov or 301-796-8118

(b)(4),Testing Data

Records processed under FOIA Request 2011-7650; Released 1/25/12

Questions? Contact FDA/CDRH/OCE/DID at CDRH-FOISTATUS@fda.hhs.gov or 301-796-8118

(b)(4),Testing Data

Records processed under FOIA Request 2011-7650; Released 1/25/12

Questions? Contact FDA/CDRH/OCE/DID at CDRH-FOISTATUS@fda.hhs.gov or 301-796-8118

(b)(4),Testing Data

Records processed under FOIA Request 2011-7650; Released 1/25/12

Questions? Contact FDA/CDRH/OCE/DID at CDRH-FOISTATUS@fda.hhs.gov or 301-796-8118

(b)(4),Testing Data

Records processed under FOIA Request 2011-7650; Released 1/25/12

Questions? Contact FDA/CDRH/OCE/DID at CDRH-FOISTATUS@fda.hhs.gov or 301-796-8118

(b)(4),Testing Data

Records processed under FOIA Request 2011-7650; Released 1/25/12

Questions? Contact FDA/CDRH/OCE/DID at CDRH-FOISTATUS@fda.hhs.gov or 301-796-8118

(b)(4),Testing Data

Records processed under FOIA Request 2011-7650; Released 1/25/12

Questions? Contact FDA/CDRH/OCE/DID at CDRH-FOISTATUS@fda.hhs.gov or 301-796-8118

(b)(4),Testing Data

Records processed under FOIA Request 2011-7650; Released 1/25/12

Questions? Contact FDA/CDRH/OCE/DID at CDRH-FOISTATUS@fda.hhs.gov or 301-796-8118

(b)(4),Testing Data

Records processed under FOIA Request 2011-7650; Released 1/25/12

Questions? Contact FDA/CDRH/OCE/DID at CDRH-FOISTATUS@fda.hhs.gov or 301-796-8118

(b)(4),Testing Data

Records processed under FOIA Request 2011-7650; Released 1/25/12

Questions? Contact FDA/CDRH/OCE/DID at CDRH-FOISTATUS@fda.hhs.gov or 301-796-8118

(b)(4),Testing Data

Records processed under FOIA Request 2011-7650; Released 1/25/12

Questions? Contact FDA/CDRH/OCE/DID at CDRH-FOISTATUS@fda.hhs.gov or 301-796-8118

(b)(4),Testing Data

Records processed under FOIA Request 2011-7650; Released 1/25/12

Questions? Contact FDA/CDRH/OCE/DID at CDRH-FOISTATUS@fda.hhs.gov or 301-796-8118

(b)(4),Testing Data

Records processed under FOIA Request 2011-7650; Released 1/25/12

Questions? Contact FDA/CDRH/OCE/DID at CDRH-FOISTATUS@fda.hhs.gov or 301-796-8118

(b)(4),Testing Data

Records processed under FOIA Request 2011-7650; Released 1/25/12

Questions? Contact FDA/CDRH/OCE/DID at CDRH-FOISTATUS@fda.hhs.gov or 301-796-8118

(b)(4),Testing Data

Records processed under FOIA Request 2011-7650; Released 1/25/12

Questions? Contact FDA/CDRH/OCE/DID at CDRH-FOISTATUS@fda.hhs.gov or 301-796-8118

(b)(4),Testing Data

Records processed under FOIA Request 2011-7650; Released 1/25/12

Questions? Contact FDA/CDRH/OCE/DID at CDRH-FOISTATUS@fda.hhs.gov or 301-796-8118

Records processed under FOIA Request 2011-7650; Released 1/25/12

Questions or Contact FDA/CDRH/OCE/DID at CDRH-FOISTATUS@fda.hhs.gov or 301-796-8118

(b)(4),Testing Data

Records processed under FOIA Request 2011-7650; Released 1/25/12

Questions? Contact FDA/CDRH/OCE/DID at CDRH-FOISTATUS@fda.hhs.gov or 301-796-8118

(b)(4),Testing Data

Records processed under FOIA Request 2011-7650; Released 1/25/12

Questions? Contact FDA/CDRH/OCE/DID at CDRH-FOISTATUS@fda.hhs.gov or 301-796-8118

(b)(4),Testing Data

Records processed under FOIA Request 2011-7650; Released 1/25/12

Questions? Contact FDA/CDRH/OCE/DID at CDRH-FOISTATUS@fda.hhs.gov or 301-796-8118

(b)(4),Testing Data

Records processed under FOIA Request 2011-7650; Released 1/25/12

Questions? Contact FDA/CDRH/OCE/DID at CDRH-FOISTATUS@fda.hhs.gov or 301-796-8118

(b)(4),Testing Data

Records processed under FOIA Request 2011-7650; Released 1/25/12

Questions? Contact FDA/CDRH/OCE/DID at CDRH-FOISTATUS@fda.hhs.gov or 301-796-8118

(b)(4),Testing Data

Records processed under FOIA Request 2011-7650; Released 1/25/12

Questions? Contact FDA/CDRH/OCE/DID at CDRH-FOISTATUS@fda.hhs.gov or 301-796-8118

(b)(4),Testing Data

Records processed under FOIA Request 2011-7650; Released 1/25/12

Questions? Contact FDA/CDRH/OCE/DID at CDRH-FOISTATUS@fda.hhs.gov or 301-796-8118

(b)(4),Testing Data

Records processed under FOIA Request 2011-7650; Released 1/25/12

Questions? Contact FDA/CDRH/OCE/DID at CDRH-FOISTATUS@fda.hhs.gov or 301-796-8118

(b)(4),Testing Data

Records processed under FOIA Request 2011-7650; Released 1/25/12

Questions? Contact FDA/CDRH/OCE/DID at CDRH-FOISTATUS@fda.hhs.gov or 301-796-8118

(b)(4),Testing Data

Records processed under FOIA Request 2011-7650; Released 1/25/12

Questions? Contact FDA/CDRH/OCE/DID at CDRH-FOISTATUS@fda.hhs.gov or 301-796-8118

(b)(4),Testing Data

Records processed under FOIA Request 2011-7650; Released 1/25/12

Questions? Contact FDA/CDRH/OCE/DID at CDRH-FOISTATUS@fda.hhs.gov or 301-796-8118

(b)(4),Testing Data

Records processed under FOIA Request 2011-7650; Released 1/25/12

Questions? Contact FDA/CDRH/OCE/DID at CDRH-FOISTATUS@fda.hhs.gov or 301-796-8118

(b)(4),Testing Data

Records processed under FOIA Request 2011-7650; Released 1/25/12

Questions? Contact FDA/CDRH/OCE/DID at CDRH-FOISTATUS@fda.hhs.gov or 301-796-8118

(b)(4),Testing Data

Records processed under FOIA Request 2011-7650; Released 1/25/12

Questions? Contact FDA/CDRH/OCE/DID at CDRH-FOISTATUS@fda.hhs.gov or 301-796-8118

(b)(4),Testing Data

Records processed under FOIA Request 2011-7650; Released 1/25/12

Questions? Contact FDA/CDRH/OCE/DID at CDRH-FOISTATUS@fda.hhs.gov or 301-796-8118

(b)(4),Testing Data

Records processed under FOIA Request 2011-7650; Released 1/25/12

Questions? Contact FDA/CDRH/OCE/DID at CDRH-FOISTATUS@fda.hhs.gov or 301-796-8118

Records processed under FOIA Request 2011-7650; Released 1/25/12

Acclarent	Labeling Specification	Document No.: LBL005097
	Product Label, ***Cyclops Box Top***	Revision: 3

1. Specifications:

- (b)(4)
-
-

DRAFT

FOI - Page 825 of 1276 Please contact FDA/CDRH/OCE/DID at CDRH-FOISTATUS@fda.hhs.gov or 301-796-8118

Records processed under FOIA Request 2011-7650; Released 1/25/12

DEPARTMENT OF HEALTH & HUMAN SERVICES

Public Health Service

U.S. Food and Drug Administration
Center for Devices and Radiological Health
Document Mail Center ¿ WO66-G609
10903 New Hampshire Avenue
Silver Spring, MD 20993-0002

December 10, 2010

ACCLARENT, INC.
1525-B O'BRIEN DR.
MENLO PARK, CALIFORNIA 94025
UNITED STATES
ATTN: KERI YEN

510k Number: K100577

Product: ACCLARENT CYCLOPS

The additional information you have submitted has been received.

We will notify you when the processing of this submission has been completed or if any additional information is required. Pleaseremember that all correspondence concerning your submission MUST be sent to the Document Mail Center at the above letterhead address. Correspondence sent to any address other than the one above will not be considered as part of your official premarket notification submission. Also, please note the new Blue Book Memorandum regarding Fax and E-mail Policy entitled, "Fax and E-Mail Communication with Industry about Premarket Files Under Review. Please refer to this guidance for information on current fax and e-mail practices at http://www.fda.gov/MedicalDevices/DeviceRegulationandGuidance/GuidanceDocuments/ucm089402.htm. On August 12, 2005 CDRH issued the Guidance for Industry and FDA Staff: Format for Traditional and Abbreviated 510(k)s. This guidance can be found at http://www.fda.gov/MedicalDevices/DeviceRegulationandGuidance/GuidanceDocuments/ucm084365.htm. Please refer to this guidance for assistance on how to format an original submission for a Traditional or Abbreviated 510(k).

The Safe Medical Devices Act of 1990, signed on November 28, states that you may not place this device into commercial distribution until you receive a letter from FDA allowing you to do so. As in the past, we intend to complete our review as quickly as possible. Generally we do so in 90 days. However, the complexity of a submission or a requirement for additional information may occasionally cause the review to extend beyond 90 days. Thus, if you have not received a written decision or been contacted within 90 days of our receipt date you may want to check with FDA to determine the status of your submission.

Please ensure that whether you submit a 510(k) Summary as per 21 CFR 807.92, or a 510(k) Statement as per 21 CFR 807.93, it meets the content and format regulatory requirements.

If you have procedural questions, please contact the Division of Small Manufacturers International and Consumer Assistance (DSMICA) at (301)796-7100 or at their toll-free number (800)638-2041, or contact the 510k staff at (301)796-5640.

Sincerely,

510(k) Staff

514

Questions? Contact FDA/CDRH/OCE/DID at CDRH-FOISTATUS@fda.hhs.gov or 301-796-8118

Records processed under FOIA Request 2011-7650; Released 1/25/12

K100577/S2

Acclarent

FDA CDRH DMC

DEC 10 2010

Received

December 8, 2010

Ms. Susan Rudy, MSN, CRNP, CORLN
Food and Drug Administration
Center for Devices and Radiological Health
Document Mail Center—WO66-G609
10903 New Hampshire Avenue
Silver Spring, MD 20993-0002

RE: Response to K100577/A002 E-mail Sent December 3, 2010: Acclarent Cyclops Multi-Angle Endoscope

Dear Ms. Rudy:

Acclarent received FDA's questions dated December 3, 2010 for the above referenced 510(k) submission and hereby submits two copies of our response.

Acclarent, Inc regards the contents of this submission to be proprietary commercial information entitled to the full confidentiality safeguards of 21 CFR Parts 20.45, 20.61 and 807.95(b).

If you have any questions regarding this submission, please do not hesitate to contact me by phone (650) 687-5874, fax (650) 687-4449 or by email at kyen@acclarent.com. Alternatively, you may contact Mike Handley by phone (650) 687-5424 or by email at mike.handley@acclarent.com. Thank you for your time and consideration.

Sincerely,

Keri Yen
Regulatory Affairs Manager

515

Questions? Contact FDA/CDRH/OCE/DID at CDRH-FOISTATUS@fda.hhs.gov or 301-796-8118

(b)(4),Testing Data

Records processed under FOIA Request 2011-7650; Released 1/25/12

Questions? Contact FDA/CDRH/OCE/DID at CDRH-FOISTATUS@fda.hhs.gov or 301-796-8118

(b)(4),Testing Data

Records processed under FOIA Request 2011-7650; Released 1/25/12

Questions? Contact FDA/CDRH/OCE/DID at CDRH-FOISTATUS@fda.hhs.gov or 301-796-8118

(b)(4),Testing Data

Records processed under FOIA Request 2011-7650; Released 1/25/12

Questions? Contact FDA/CDRH/OCE/DID at CDRH-FOISTATUS@fda.hhs.gov or 301-796-8118

(b)(4),Testing Data

Records processed under FOIA Request 2011-7650; Released 1/25/12

Questions? Contact FDA/CDRH/OCE/DID at CDRH-FOISTATUS@fda.hhs.gov or 301-796-8118

(b)(4),Testing Data

Records processed under FOIA Request 2011-7650; Released 1/25/12

Questions? Contact FDA/CDRH/OCE/DID at CDRH-FOISTATUS@fda.hhs.gov or 301-796-8118

(b)(4),Testing Data

Records processed under FOIA Request 2011-7650; Released 1/25/12

Questions? Contact FDA/CDRH/OCE/DID at CDRH-FOISTATUS@fda.hhs.gov or 301-796-8118

(b)(4),Testing Data

Records processed under FOIA Request 2011-7650; Released 1/25/12

Questions? Contact FDA/CDRH/OCE/DID at CDRH-FOISTATUS@fda.hhs.gov or 301-796-8118

(b)(4),Testing Data

Records processed under FOIA Request 2011-7650; Released 1/25/12

Questions? Contact FDA/CDRH/OCE/DID at CDRH-FOISTATUS@fda.hhs.gov or 301-796-8118

(b)(4),Testing Data

Records processed under FOIA Request 2011-7650; Released 1/25/12

Questions? Contact FDA/CDRH/OCE/DID at CDRH-FOISTATUS@fda.hhs.gov or 301-796-8118

(b)(4),Testing Data

Records processed under FOIA Request 2011-7650; Released 1/25/12

Questions? Contact FDA/CDRH/OCE/DID at CDRH-FOISTATUS@fda.hhs.gov or 301-796-8118

(b)(4),Testing Data

Records processed under FOIA Request 2011-7650; Released 1/25/12

Questions? Contact FDA/CDRH/OCE/DID at CDRH-FOISTATUS@fda.hhs.gov or 301-796-8118

(b)(4),Testing Data

Records processed under FOIA Request 2011-7650; Released 1/25/12

Questions? Contact FDA/CDRH/OCE/DID at CDRH-FOISTATUS@fda.hhs.gov or 301-796-8118

(b)(4),Testing Data

Records processed under FOIA Request 2011-7650; Released 1/25/12

Questions? Contact FDA/CDRH/OCE/DID at CDRH-FOISTATUS@fda.hhs.gov or 301-796-8118

(b)(4),Testing Data

Records processed under FOIA Request 2011-7650; Released 1/25/12

Questions? Contact FDA/CDRH/OCE/DID at CDRH-FOISTATUS@fda.hhs.gov or 301-796-8118

(b)(4),Testing Data

Records processed under FOIA Request 2011-7650; Released 1/25/12

Questions? Contact FDA/CDRH/OCE/DID at CDRH-FOISTATUS@fda.hhs.gov or 301-796-8118

(b)(4),Testing Data

Records processed under FOIA Request 2011-7650; Released 1/25/12

Questions? Contact FDA/CDRH/OCE/DID at CDRH-FOISTATUS@fda.hhs.gov or 301-796-8118

(b)(4),Testing Data

Records processed under FOIA Request 2011-7650; Released 1/25/12

Questions? Contact FDA/CDRH/OCE/DID at CDRH-FOISTATUS@fda.hhs.gov or 301-796-8118

(b)(4),Testing Data

Records processed under FOIA Request 2011-7650; Released 1/25/12

Questions? Contact FDA/CDRH/OCE/DID at CDRH-FOISTATUS@fda.hhs.gov or 301-796-8118

(b)(4),Testing Data

Records processed under FOIA Request 2011-7650; Released 1/25/12

Questions? Contact FDA/CDRH/OCE/DID at CDRH-FOISTATUS@fda.hhs.gov or 301-796-8118

(b)(4),Testing Data

Records processed under FOIA Request 2011-7650; Released 1/25/12

Questions? Contact FDA/CDRH/OCE/DID at CDRH-FOISTATUS@fda.hhs.gov or 301-796-8118

(b)(4),Testing Data

Records processed under FOIA Request 2011-7650; Released 1/25/12

Questions? Contact FDA/CDRH/OCE/DID at CDRH-FOISTATUS@fda.hhs.gov or 301-796-8118

(b)(4),Testing Data

Records processed under FOIA Request 2011-7650; Released 1/25/12

Questions? Contact FDA/CDRH/OCE/DID at CDRH-FOISTATUS@fda.hhs.gov or 301-796-8118

(b)(4),Testing Data

Records processed under FOIA Request 2011-7650; Released 1/25/12

Questions? Contact FDA/CDRH/OCE/DID at CDRH-FOISTATUS@fda.hhs.gov or 301-796-8118

(b)(4),Testing Data

Records processed under FOIA Request 2011-7650; Released 1/25/12

Questions? Contact FDA/CDRH/OCE/DID at CDRH-FOISTATUS@fda.hhs.gov or 301-796-8118

(b)(4),Testing Data

Records processed under FOIA Request 2011-7650; Released 1/25/12

Questions? Contact FDA/CDRH/OCE/DID at CDRH-FOISTATUS@fda.hhs.gov or 301-796-8118

(b)(4),Testing Data

Records processed under FOIA Request 2011-7650; Released 1/25/12

Questions? Contact FDA/CDRH/OCE/DID at CDRH-FOISTATUS@fda.hhs.gov or 301-796-8118

(b)(4),Testing Data

Records processed under FOIA Request 2011-7650; Released 1/25/12

Questions? Contact FDA/CDRH/OCE/DID at CDRH-FOISTATUS@fda.hhs.gov or 301-796-8118

(b)(4),Testing Data

Records processed under FOIA Request 2011-7650; Released 1/25/12

Questions? Contact FDA/CDRH/OCE/DID at CDRH-FOISTATUS@fda.hhs.gov or 301-796-8118

(b)(4),Testing Data

Records processed under FOIA Request 2011-7650; Released 1/25/12

Questions? Contact FDA/CDRH/OCE/DID at CDRH-FOISTATUS@fda.hhs.gov or 301-796-8118

(b)(4),Testing Data

Records processed under FOIA Request 2011-7650; Released 1/25/12

Questions? Contact FDA/CDRH/OCE/DID at CDRH-FOISTATUS@fda.hhs.gov or 301-796-8118

(b)(4),Testing Data

Records processed under FOIA Request 2011-7650; Released 1/25/12

Questions? Contact FDA/CDRH/OCE/DID at CDRH-FOISTATUS@fda.hhs.gov or 301-796-8118

(b)(4),Testing Data

Records processed under FOIA Request 2011-7650; Released 1/25/12

Questions? Contact FDA/CDRH/OCE/DID at CDRH-FOISTATUS@fda.hhs.gov or 301-796-8118

(b)(4),Testing Data

Records processed under FOIA Request 2011-7650; Released 1/25/12

Questions? Contact FDA/CDRH/OCE/DID at CDRH-FOISTATUS@fda.hhs.gov or 301-796-8118

(b)(4),Testing Data

Records processed under FOIA Request 2011-7650; Released 1/25/12

Questions? Contact FDA/CDRH/OCE/DID at CDRH-FOISTATUS@fda.hhs.gov or 301-796-8118

(b)(4),Testing Data

Records processed under FOIA Request 2011-7650; Released 1/25/12

Questions? Contact FDA/CDRH/OCE/DID at CDRH-FOISTATUS@fda.hhs.gov or 301-796-8118

(b)(4),Testing Data

Records processed under FOIA Request 2011-7650; Released 1/25/12

Questions? Contact FDA/CDRH/OCE/DID at CDRH-FOISTATUS@fda.hhs.gov or 301-796-8118

(b)(4),Testing Data

Records processed under FOIA Request 2011-7650; Released 1/25/12

Questions? Contact FDA/CDRH/OCE/DID at CDRH-FOISTATUS@fda.hhs.gov or 301-796-8118

(b)(4),Testing Data

Records processed under FOIA Request 2011-7650; Released 1/25/12

Questions? Contact FDA/CDRH/OCE/DID at CDRH-FOISTATUS@fda.hhs.gov or 301-796-8118

(b)(4),Testing Data

Records processed under FOIA Request 2011-7650; Released 1/25/12

Questions? Contact FDA/CDRH/OCE/DID at CDRH-FOISTATUS@fda.hhs.gov or 301-796-8118

(b)(4),Testing Data

Records processed under FOIA Request 2011-7650; Released 1/25/12

Questions? Contact FDA/CDRH/OCE/DID at CDRH-FOISTATUS@fda.hhs.gov or 301-796-8118

(b)(4),Testing Data

Records processed under FOIA Request 2011-7650; Released 1/25/12

Questions? Contact FDA/CDRH/OCE/DID at CDRH-FOISTATUS@fda.hhs.gov or 301-796-8118

(b)(4),Testing Data

Records processed under FOIA Request 2011-7650; Released 1/25/12

Questions? Contact FDA/CDRH/OCE/DID at CDRH-FOISTATUS@fda.hhs.gov or 301-796-8118

(b)(4),Testing Data

Records processed under FOIA Request 2011-7650; Released 1/25/12

Questions? Contact FDA/CDRH/OCE/DID at CDRH-FOISTATUS@fda.hhs.gov or 301-796-8118

(b)(4),Testing Data

Records processed under FOIA Request 2011-7650; Released 1/25/12

Questions? Contact FDA/CDRH/OCE/DID at CDRH-FOISTATUS@fda.hhs.gov or 301-796-8118

(b)(4),Testing Data

Records processed under FOIA Request 2011-7650; Released 1/25/12

Questions? Contact FDA/CDRH/OCE/DID at CDRH-FOISTATUS@fda.hhs.gov or 301-796-8118

(b)(4),Testing Data

Records processed under FOIA Request 2011-7650; Released 1/25/12

Questions? Contact FDA/CDRH/OCE/DID at CDRH-FOISTATUS@fda.hhs.gov or 301-796-8118

(b)(4),Testing Data

Records processed under FOIA Request 2011-7650; Released 1/25/12

Questions? Contact FDA/CDRH/OCE/DID at CDRH-FOISTATUS@fda.hhs.gov or 301-796-8118

(b)(4),Testing Data

Records processed under FOIA Request 2011-7650; Released 1/25/12

Questions? Contact FDA/CDRH/OCE/DID at CDRH-FOISTATUS@fda.hhs.gov or 301-796-8118

(b)(4),Testing Data

Records processed under FOIA Request 2011-7650; Released 1/25/12

Questions? Contact FDA/CDRH/OCE/DID at CDRH-FOISTATUS@fda.hhs.gov or 301-796-8118

(b)(4),Testing Data

Records processed under FOIA Request 2011-7650; Released 1/25/12

Questions? Contact FDA/CDRH/OCE/DID at CDRH-FOISTATUS@fda.hhs.gov or 301-796-8118

(b)(4),Testing Data

Records processed under FOIA Request 2011-7650; Released 1/25/12

Questions? Contact FDA/CDRH/OCE/DID at CDRH-FOISTATUS@fda.hhs.gov or 301-796-8118

(b)(4),Testing Data

Records processed under FOIA Request 2011-7650; Released 1/25/12

Questions? Contact FDA/CDRH/OCE/DID at CDRH-FOISTATUS@fda.hhs.gov or 301-796-8118

(b)(4),Testing Data

Records processed under FOIA Request 2011-7650; Released 1/25/12

Questions? Contact FDA/CDRH/OCE/DID at CDRH-FOISTATUS@fda.hhs.gov or 301-796-8118

(b)(4),Testing Data

Records processed under FOIA Request 2011-7650; Released 1/25/12

Questions? Contact FDA/CDRH/OCE/DID at CDRH-FOISTATUS@fda.hhs.gov or 301-796-8118

(b)(4),Testing Data

Records processed under FOIA Request 2011-7650; Released 1/25/12

Questions? Contact FDA/CDRH/OCE/DID at CDRH-FOISTATUS@fda.hhs.gov or 301-796-8118

(b)(4),Testing Data

Records processed under FOIA Request 2011-7650; Released 1/25/12

Questions? Contact FDA/CDRH/OCE/DID at CDRH-FOISTATUS@fda.hhs.gov or 301-796-8118

(b)(4),Testing Data

Records processed under FOIA Request 2011-7650; Released 1/25/12

Questions? Contact FDA/CDRH/OCE/DID at CDRH-FOISTATUS@fda.hhs.gov or 301-796-8118

(b)(4),Testing Data

Records processed under FOIA Request 2011-7650; Released 1/25/12

Questions? Contact FDA/CDRH/OCE/DID at CDRH-FOISTATUS@fda.hhs.gov or 301-796-8118

(b)(4),Testing Data

Records processed under FOIA Request 2011-7650; Released 1/25/12

Questions? Contact FDA/CDRH/OCE/DID at CDRH-FOISTATUS@fda.hhs.gov or 301-796-8118

(b)(4),Testing Data

Records processed under FOIA Request 2011-7650; Released 1/25/12

Questions? Contact FDA/CDRH/OCE/DID at CDRH-FOISTATUS@fda.hhs.gov or 301-796-8118

(b)(4),Testing Data

Records processed under FOIA Request 2011-7650; Released 1/25/12

Questions? Contact FDA/CDRH/OCE/DID at CDRH-FOISTATUS@fda.hhs.gov or 301-796-8118

(b)(4),Testing Data

Records processed under FOIA Request 2011-7650; Released 1/25/12

Questions? Contact FDA/CDRH/OCE/DID at CDRH-FOISTATUS@fda.hhs.gov or 301-796-8118

(b)(4),Testing Data

Records processed under FOIA Request 2011-7650; Released 1/25/12

Questions? Contact FDA/CDRH/OCE/DID at CDRH-FOISTATUS@fda.hhs.gov or 301-796-8118

(b)(4),Testing Data

Records processed under FOIA Request 2011-7650; Released 1/25/12

Questions? Contact FDA/CDRH/OCE/DID at CDRH-FOISTATUS@fda.hhs.gov or 301-796-8118

(b)(4),Testing Data

Records processed under FOIA Request 2011-7650; Released 1/25/12

Questions? Contact FDA/CDRH/OCE/DID at CDRH-FOISTATUS@fda.hhs.gov or 301-796-8118

(b)(4),Testing Data

Records processed under FOIA Request 2011-7650; Released 1/25/12

Questions? Contact FDA/CDRH/OCE/DID at CDRH-FOISTATUS@fda.hhs.gov or 301-796-8118

(b)(4),Testing Data

Records processed under FOIA Request 2011-7650; Released 1/25/12

Questions? Contact FDA/CDRH/OCE/DID at CDRH-FOISTATUS@fda.hhs.gov or 301-796-8118

(b)(4),Testing Data

Records processed under FOIA Request 2011-7650; Released 1/25/12

Questions? Contact FDA/CDRH/OCE/DID at CDRH-FOISTATUS@fda.hhs.gov or 301-796-8118

(b)(4),Testing Data

Records processed under FOIA Request 2011-7650; Released 1/25/12

Questions? Contact FDA/CDRH/OCE/DID at CDRH-FOISTATUS@fda.hhs.gov or 301-796-8118

(b)(4),Testing Data

Records processed under FOIA Request 2011-7650; Released 1/25/12

Questions? Contact FDA/CDRH/OCE/DID at CDRH-FOISTATUS@fda.hhs.gov or 301-796-8118

(b)(4),Testing Data

Records processed under FOIA Request 2011-7650; Released 1/25/12

Questions? Contact FDA/CDRH/OCE/DID at CDRH-FOISTATUS@fda.hhs.gov or 301-796-8118

(b)(4),Testing Data

Records processed under FOIA Request 2011-7650; Released 1/25/12

Questions? Contact FDA/CDRH/OCE/DID at CDRH-FOISTATUS@fda.hhs.gov or 301-796-8118

(b)(4),Testing Data

Records processed under FOIA Request 2011-7650; Released 1/25/12

Questions? Contact FDA/CDRH/OCE/DID at CDRH-FOISTATUS@fda.hhs.gov or 301-796-8118

(b)(4),Testing Data

Records processed under FOIA Request 2011-7650; Released 1/25/12

Questions? Contact FDA/CDRH/OCE/DID at CDRH-FOISTATUS@fda.hhs.gov or 301-796-8118

Records processed under FOIA Request 2011-7650; Released 1/25/12

STERIS®

OPERATOR MANUAL

Reliance® 444 Single-Chamber Washer/Disinfector

(2008-03-25) P122999-133

590

Questions? Contact FDA/CDRH/OCE/DID at CDRH-FOISTATUS@fda.hhs.gov or 301-796-8118

Records processed under FOIA Request 2011-7650; Released 1/25/12

WARNING — COPYING PROHIBITED

This manual is protected by Federal Copyright Law, which provides for damages of up to USD $20000, as well as criminal fines and imprisonment, for unauthorized copying.

591

Questions? Contact FDA/CDRH/OCE/DID at CDRH-FOISTATUS@fda.hhs.gov or 301-796-8118

Records processed under FOIA Request 2011-7650; Released 1/25/12

A WORD FROM STERIS CORPORATION

This manual contains important information on the proper use and routine maintenance of the Reliance® 444 Single-Chamber Washer/Disinfector. **All personnel involved in the use and maintenance of this equipment must carefully review and comply with the *Safety Precautions* and instructions contained in this manual.** These instructions are important to protect the health and safety of personnel operating this washer/disinfector and should be retained in a conveniently accessible area for quick reference. This equipment is specifically designed only for the uses outlined in this manual.

Complete instructions for uncrating and connecting utilities, as well as the equipment drawing, have been provided. If they are missing, contact STERIS for replacement copies, providing the serial number and model of the washer/disinfector.

Advisory

IMPORTANT: *A listing of the Safety Precautions to be observed when operating and servicing this washer/disinfector can be found in* SECTION *1 of this manual. Do not operate the equipment until you have become familiar with this information.*

STERIS does not intend, recommend or represent in any way that this Reliance 444 Single-Chamber Washer/Disinfector be used for the terminal disinfection or sterilization of any regulated medical device. The Reliance 444 Single-Chamber Washer/Disinfector is intended only to perform an initial step in the processing of soiled, reusable medical devices. If medical devices will be contacting blood or compromised tissues, such devices must be terminally processed in accordance with device manufacturer's instructions and/or Good Hospital Practices before each use in human patients.

STERIS does not recommend the use of the Suction Tips and Instruments Rack for processing endoscopes, laparoscopes or other instruments used for minimally invasive surgery. Processing these types of instruments may result in equipment damage as well as improperly cleaned items.

STERIS does not intend, recommend nor represent that the Rigid MIS Instrument Rack be used for the terminal disinfection or sterilization of any regulated medical device.

The Rigid MIS Instrument Rack is specifically designed to only process goods as outlined in its *Operator Manual* (P920003-690). If there is any doubt about a specific material or product, contact the instrument manufacturer for recommended washing techniques.

Any alteration of this equipment not authorized or performed by STERIS will void the warranty. Alteration of equipment which could adversely affect its operation and efficacy may violate national, state and local regulations.

©2008. STERIS Corporation. All rights reserved.

Printed in Canada.

Questions? Contact FDA/CDRH/OCE/DID at CDRH-FOISTATUS@fda.hhs.gov or 301-796-8118

Records processed under FOIA Request 2011-7650; Released 1/25/12

Certification

This Reliance 444 Single-Chamber Washer/Disinfector meets the applicable requirements of the following standard:

- Underwriters Laboratories (UL) Standard UL 61010-1, Second Edition.
- Canadian Standards Association (CSA) CAN/CSA-C 22.2 No. 61010-1, Second Edition.

Corporation STERIS Canada
Québec, Qc, CANADA

ISO 13485
ISO 9001
Certified Facility

The base language of this document is ENGLISH. Any translations must be made from the base language document.

EC REP

STERIS Limited
STERIS House
Jays Close
Viables
Basingstoke
Hampshire
RG22 4AX
United Kingdom

Sales and Service:
STERIS Corporation
5960 Heisley Road
Mentor, Ohio 44060
440-354-2600 • 800-444-9009

www.steris.com

593

Questions? Contact FDA/CDRH/OCE/DID at CDRH-FOISTATUS@fda.hhs.gov or 301-796-8118

Records processed under FOIA Request 2011-7650; Released 1/25/12

Healthcare
Capital Equipment

Records processed under FOIA Request 2011-7650; Released 1/25/12

TABLE OF CONTENTS

Section Number	Description	Page
	A WORD FROM STERIS CORPORATION	**i**
	Advisory	i
	Indications For Use	ii
	Service Information	ii
	Certification	iii
1	**SAFETY PRECAUTIONS**	**1-1**
2	**INSTALLATION VERIFICATION**	**2-1**
	2.1 Technical Specifications	2-1
	2.1.1 Voltage, Amperage and Power Consumption	2-1
	2.1.2 Noise Level	2-2
	2.1.3 Permissible Environmental Conditions	2-2
	2.1.4 Seismic Anchorage System	2-2
	2.2 Installation Checklist	2-2
	2.3 Detergents and Chemical Additives Specifications	2-4
	COMPONENT IDENTIFICATION	**3-1**
	3.1 Control Location	3-2
	3.1.1 Power Switch	3-2
	3.1.2 POWER-OFF/STANDBY Switch	3-2
	3.1.3 Printer	3-2
	3.2 Load Side Control Panel	3-4
	3.2.1 Display Screen	3-4
	3.2.2 Touch Pads	3-4
	3.3 Unload Side Control Panel	3-5
	3.4 Reliance ATS Automated Transport System (Option)	3-6
	3.5 SCS Conveyor System (Option)	3-7
4	**OPERATING INSTRUCTIONS**	**4-1**
	4.1 Before Operating Equipment	4-1
	4.2 Priming Procedure	4-2
	4.3 Accessories	4-3
	4.4 Loading Unit Without Conveyor Modules	4-11
	4.5 Loading Unit With Conveyor Modules	4-12

Continued...

Questions? Contact FDA/CDRH/OCE/DID at CDRH-FOISTATUS@fda.hhs.gov or 301-796-8118

FOI - Page 007 of 1276

Records processed under FOIA Request 2011-7650; Released 1/25/12

TABLE OF CONTENTS (Cont'd)

Section Number	Description	Page
4	**OPERATING INSTRUCTIONS (Cont'd)**	
	4.6 Manual Entry of Bar Code Identification Number	4-15
	4.7 Typical Cycle Operation	4-16
	4.8 Visual Inspection	4-18
	4.9 Responding to an Alarm	4-18
	4.10 Stop Cycle Operation	4-19
	4.11 Abort Cycle Operation	4-19
	4.12 Shutdown	4-20
	4.13 Power Door Operation	4-21
	4.14 Door Obstruction	4-21
	4.15 Power Door Operation During a Power Failure	4-22
5	**CYCLE AND CONTROL VALUE PROGRAMMING**	**5-1**
	5.1 General	5-1
	5.2 Change Values Mode	5-4
	5.3 Modifying Factory-Set Cycles	5-5
	5.4 Adding Treatments to Cycles	5-7
	5.5 Removing Treatments From Cycles	5-10
	5.6 Creating Custom Cycles	5-10
	5.7 Using Custom Cycles	5-13
	5.8 Changing Miscellaneous Values	5-13
	5.8.1 Selecting Recirculation Pump Motor Speed	5-13
	5.8.2 Printing Cycle Values	5-15
	5.8.3 Turning Printer ON/OFF	5-15
	5.8.4 Setting Date and Time	5-16
	5.9 Access Code	5-17
	5.9.1 Enabling/Changing Access Code	5-19
	5.9.2 Disabling Access Code	5-20
	5.10 Conveyor Bypass With ATS Automated Transport System	5-21
6	**ROUTINE MAINTENANCE**	**6-1**
	6.1 General	6-1
	6.2 Preventive Maintenance	6-2
	6.3 Daily Cleaning	6-4

Continued...

Questions? Contact FDA/CDRH/OCE/DID at CDRH-FOISTATUS@fda.hhs.gov or 301-796-8118

Records processed under FOIA Request 2011-7650; Released 1/25/12

TABLE OF CONTENTS (Cont'd)

Section Number	Description	Page
6	**ROUTINE MAINTENANCE (Cont'd)**	
	6.4 Weekly Cleaning	6-4
	6.4.1 Routine Cleaning Procedures	6-4
	6.4.2 DECONTAM Cycle	6-5
	6.4.3 Building Supply-Line Strainers	6-6
	6.5 Chemical Container Replacement	6-7
	6.6 Verify and Lubricate Peristaltic Injection Pump Squeeze Tubes	6-8
	6.7 Verifying Power Doors	6-9
	6.8 Changing Printer Paper Roll	6-9
	6.9 Storing Thermal Paper	6-11
	6.10 Emergency Stop Buttons Verification	6-11
7	**TROUBLESHOOTING**	**7-1**
	7.1 General	7-1
	7.2 Control Monitoring and Communication System	7-4
8	**REPLACEMENT PARTS AND PRODUCTS**	**8-1**

597

Questions? Contact FDA/CDRH/OCE/DID at CDRH-FOISTATUS@fda.hhs.gov or 301-796-8118

Records processed under FOIA Request 2011-7650; Released 1/25/12

Healthcare
Capital Equipment

Questions? Contact FDA/CDRH/OCE/DID at CDRH-FOISTATUS@fda.hhs.gov or 301-796-8118

Records processed under FOIA Request 2011-7650; Released 1/25/12

LIST OF ILLUSTRATIONS

Figure	Description	Page
Section 3:	**Component Identification**	
3-1	Reliance 444 Single-Chamber Washer/Disinfector	3-1
3-2	Printer and Front Control Panel	3-3
3-3	Reliance ATS Automated Transport System Side View (Typical)	3-6
3-4	SCS Conveyor System (Option)	3-7
Section 4:	**Operating Instructions**	
4-1	Chemical Container	4-1
4-2	Two-Level Manifold Rack	4-4
4-3	Three-Level Manifold Rack	4-4
4-4	Four-Level Manifold Rack	4-5
4-5	Five-Level Manifold Rack	4-5
4-6	Anesthesia/Respiratory Rack	4-6
4-7	Hold Down Screen (For Low Speed Only)	4-7
4-8	Suction Tips and Instrument Rack	4-8
4-9	Rigid MIS Instrument Rack	4-9
4-10	Multipurpose Basin Rack	4-9
4-11	Kidney Bowl Rack (For Low Speed Only)	4-10
4-12	Bedpan Rack	4-10
4-13	Bar Code Tag Insertion	4-14
4-14	Door Cable Pulleys	4-22
4-15	Power Door Operation During a Power Failure	4-23
4-16	Safety Door Stop	4-23
Section 5:	**Cycle and Control Value Programming**	
5-1	Change Values Mode Functions	5-4
5-2	Change Values Mode – Program Tree	5-4
5-3	Change Values Mode – Modifying Factory-Set Cycles	5-6
5-4	Change Values Mode – Adding Treatments to Cycles	5-9
5-5	Change Values Mode – Creating Custom Cycles	5-12
5-6	Change Values Mode – Changing Miscellaneous Values	5-14
5-7	Change Values Mode – Programming With Access Code Enabled	5-18
Section 6:	**Routine Maintenance**	
6-1	Changing Printer Paper Roll	6-10

Questions? Contact FDA/CDRH/OCE/DID at CDRH-FOISTATUS@fda.hhs.gov or 301-796-8118

Records processed under FOIA Request 2011-7650; Released 1/25/12

Healthcare
Capital Equipment

Questions? Contact FDA/CDRH/OCE/DID at CDRH-FOISTATUS@fda.hhs.gov or 301-796-8118

Records processed under FOIA Request 2011-7650; Released 1/25/12

SAFETY PRECAUTIONS

The following *Safety Precautions* **must** be observed when operating or servicing this Reliance® 444 Single-Chamber Washer/Disinfector. WARNING indicates the potential for personal injury and CAUTION indicates the potential for damage to equipment. For emphasis, certain *Safety Precautions* are repeated throughout the manual. **It is important to review ALL *Safety Precautions* before operating or servicing the washer/disinfector.**

WARNING – PERSONAL INJURY AND/OR EQUIPMENT DAMAGE HAZARD:

- Always load empty baskets on appropriate loading cart or surface.
- Do not place empty baskets directly on conveyor modules. If you do, proximity sensor will detect basket and indexing will automatically start.
- If an obstruction is present in the wash chamber door, door safety sensor will detect obstruction and door will automatically stop closing. Wait until door is fully open and water flow has stopped before removing obstruction.
- Regularly scheduled preventive maintenance is required for safe and reliable operation of this equipment. Contact STERIS to schedule preventive maintenance.
- Repairs and adjustments to this equipment must be made only by STERIS or STERIS-trained service personnel. Repairs and adjustments performed by unqualified personnel or installation of unauthorized parts could cause personal injury, result in improper equipment performance, void the warranty or result in costly damage. Contact STERIS regarding service options.
- When placing basket on conveyor module, ensure basket support hook is in closed position; i.e., flush with side of basket.

WARNING – PERSONAL INJURY HAZARD:

- If an obstruction is present in the wash chamber door and door is unable to raise, DO NOT attempt to remove obstruction from under the door. Door cables may have slacken and door may close at high speed when obstruction is removed. Call a qualified service technician to safely remove obstruction.
- In case of an emergency situation involving conveyor modules, always press START/STOP pushbutton to stop all conveyor operation.
- In case of an emergency situation involving SCS-FO or SCS-2W-FO conveyor, depressurize conveyor line by pressing Pressure-Release pushbutton on SCS-FO or SCS-2W-FO conveyor.
- In case of power loss, automatic door(s) lowers slowly by gravity. Keep fingers and hands out of door area to avoid personal injury.
- Risk of pinch point between door and upper panel. Do not push on top portion of doors; do not push on door when door is rising; do not push on door when door is jammed.

601

Questions? Contact FDA/CDRH/OCE/DID at CDRH-FOISTATUS@fda.hhs.gov or 301-796-8118

Records processed under FOIA Request 2011-7650; Released 1/25/12

WARNING – PERSONAL INJURY HAZARD (Cont'd):

The chamber door is heavy. Lifting door manually may require two people.

When baskets are present on conveyor modules, keep fingers and hands away from wash chamber doors and moving baskets.

WARNING – ELECTRIC SHOCK AND/OR BURN HAZARD:

Disconnect all utilities to washer/disinfector before servicing. Do not service unit unless all utilities have been properly locked out. Always follow electrical safety-related work practice standards.

Fasteners and star washers are used to ensure protective bonding continuity. Always reinstall any star washer which may have been removed during installation or servicing.

WARNING – POSSIBLE FIRE HAZARD:

When washer/disinfector is installed on a combustible floor, floor must be covered with a metal sheet extending to the outer edges of washer/disinfector.

WARNING – CHEMICAL BURN AND/OR EYE INJURY HAZARD:

Detergents are caustic and can cause adverse effects to exposed tissues. Do not get in eyes, on skin or attempt to swallow. Read and follow the precautions and instructions on the detergent label and in the Material Safety Data Sheet (MSDS) prior to handling the detergent, refilling the detergent container or servicing the detergent injection pump and lines. Wear appropriate Personal Protective Equipment (PPE) whenever handling the detergent or servicing the detergent injection pump and lines.

Wear appropriate Personal Protective Equipment (PPE) when using a descaling product. Avoid contact with the eyes or skin. If a descaling product spills or splashes on you, flush the affected area with water for 15 minutes. If swallowed, DO NOT induce vomiting. Administer an alkali with plenty of water. Seek medical attention immediately.

WARNING – BURN HAZARD:

After pressing the STOP/RESET touch pad, wait until water flow stops; then, open door slowly. Hot water/steam may be sprayed through door opening if door is opened too soon.

Allow piping to cool before inspecting and/or cleaning supply-line strainers.

Before removing an obstruction from the wash chamber door, always wear appropriate Personal Protective Equipment (PPE) and wait until water flow stops. Hot water/steam may be sprayed through door opening.

Except for an emergency, do not open door when cycle is in progress. In an emergency, first stop cycle by pressing the STOP/RESET touch pad and wait for water flow to stop. Wear appropriate Personal Protective Equipment (PPE) whenever reaching into the chamber.

Questions? Contact FDA/CDRH/OCE/DMS at CDRH-FOISTATUS@fda.hhs.gov or 301-796-8118
FOI - Page 914 of 1276

Records processed under FOIA Request 2011-7650; Released 1/25/12

WARNING – BURN HAZARD (Cont'd):

Wear appropriate Personal Protective Equipment (PPE) and open door slowly if it is necessary to open during a cycle. Hot water/steam may be sprayed through door opening when verifying automatic stop while washer/disinfector is operating.

WARNING – SLIPPING HAZARD:

To prevent slips, keep floors dry. Promptly clean up any spills or drippage. For spills or drippage of detergents or other chemicals, follow safety precautions and handling procedures set forth on detergent or chemical label and/or Material Safety Data Sheet (MSDS).

CAUTION – POSSIBLE EQUIPMENT DAMAGE:

Always position each manifold and/or bottom rotary spray over a manifold connector before operating unit. If manifolds and/or bottom rotary sprays are not positioned correctly, damage will result and unit will be unable to effectively wash load.

Always select a cycle appropriate for the items being processed. Failure to do so may result in product damage.

Always use a silicone lubricant to lubricate squeeze tubes. Petroleum-based lubricants, such as Vaseline®[1] or grease, will cause squeeze tubes to melt.

Non-manifolded one-level racks are not appropriate for high pump speed. Water pressure may lift rack.

Suction Tips (as well as other items) must be fully enclosed within the accessory (curved suction tips facing inward) to prevent obstruction in conveyor modules.

Use nonabrasive cleaners when cleaning unit. Follow directions on containers and rub in a back-and-forth motion (in same direction as surface grain). Abrasive cleaners will damage stainless steel. Cleaners rubbed in a circular motion or applied with a wire brush or steel wool on door and chamber assemblies can be harmful to stainless steel. Do not use these cleaners on painted surfaces.

When choosing a detergent, select one with a low-chloride content. Detergents with a high-chloride content must not be used, as such detergents may harm stainless steel.

Wipe all plastic or painted surfaces with a soft cloth dampened with 70% isopropyl alcohol or any non-abrasive house hold cleaner (such as glass or countertop cleaners).

[1] *Vaseline is a trademark of Cheseborough Pond's Incorporated.*

Questions? Contact FDA/CDRH/OCE/DID at CDRH-FOISTATUS@fda.hhs.gov or 301-796-8118

Records processed under FOIA Request 2011-7650; Released 1/25/12

The table below contains symbols which may be on your Reliance 444 Single-Chamber Washer/Disinfector components:

Table 1-1. Definition of Symbols

Symbol	Definition
	Protective Earth (Ground).
	Warning! Risk of Electrical Shock.
	Attention. Refer to Manual For Further Information.
	ON (For Part of Equipment).
	OFF (For Part of Equipment).
	Transfer of Heat, Hot Surface.
	Risk of Crushing Fingers or Hands.

The table below contains symbols which may be on the identification nameplate of your Reliance 444 Single-Chamber Washer/Disinfector:

Table 1-2. Definition of Symbols

Symbol	Definition
MOD.	Model of Unit.
S/N	Serial Number of Unit.
kVA	Power Rating of Unit.
V_~	Volt, Number of Phase (3 or 1), Alternating Current.
A	Amperage Rating of Unit.
Year	Year of Manufacture of Unit.
Hz	Hertz – Frequency of Unit.
WIRE + PE	Number of Wires [X] in Electrical Cable and Protective Ground Wire.

Questions? Contact FDA/CDRH/OCE/DID at OBRH-FOISTATUS@fda.hhs.gov or 301-796-8148

Records processed under FOIA Request 2011-7650; Released 1/25/12

INSTALLATION VERIFICATION

2

IMPORTANT: *A listing of the Safety Precautions to be observed when operating and servicing this washer/disinfector can be found in SECTION 1 of this manual. Do not operate the equipment until you have become familiar with this information.*

2.1 Technical Specifications

These specifications are intended to describe the technical information given on the identification nameplate of the Reliance® 444 Single-Chamber Washer/Disinfector and to state other relevant information. Verify equipment drawing (920-014-342) or identification nameplate (located at the bottom of load side corner, under control access panel) for proper voltage and amperage.

2.1.1 Voltage, Amperage and Power Consumption

The Reliance 444 Single-Chamber Washer/Disinfector operates either on:

- 208 V, 60 Hz, three-phase, four-wire, steam-heated;
- 480 V, 60 Hz, three-phase, three-wire, steam-heated;
- 380/400/415 V, 50 Hz, three-phase, three-wire, steam-heated;
- 600 V, 60 Hz, three-phase, three-wire, steam-heated;
- 380/400/415 V, 50 Hz, three-phase, three-wire, electric-heated;
- 480 V, 60 Hz, three-phase, three-wire, electric-heated;
- 600 V, 60 Hz, three-phase, three-wire, electric-heated.

- A protective ground conductor is required (Class 1 Equipment).
- The **maximum currents and power consumptions** are indicated on identification nameplate.
- Main supply voltage fluctuation not exceeding ± 10% of nominal voltage.
- Installation Category: Overvoltage Category II.
- Overvoltage attenuation must be provided. The equipment must be connected in a way to reduce transient voltage at the electrical main supply. Overvoltage attenuation can be achieved by:
  a. connecting the equipment main supply to a distribution system with multiple branch circuits;
  b. connecting the equipment main supply through an isolating transformer (380/400/415 V [input, output], three-phase, 30 kVA; 208 V [input, output], three-phase, 15 kVA; 480 V [input, output], three-phase, 30 kVA; or 600 V [input, output], three-phase, 30 kVA).

  IMPORTANT: *Customer is responsible for compliance with applicable codes and regulations.*

605

Questions? Contact FDA/CDRH/OCE/DID at CDRH-FOISTATUS@fda.hhs.gov or 301-796-8118

Records processed under FOIA Request 2011-7650; Released 1/25/12

Always follow local electrical installation codes.

Refer to *Uncrating/Installation Instructions* (P122992-165) for proper connection.

2.1.2 Noise Level

Equivalent Sound Pressure Level at work station (measured 36" [1.0 m] away from equipment and at 63" [1.6 m] from ground): **67.6 dB (A)** (Results determined according to *ISO-3746: 1979 Standard: Acoustics Determination of Sound Power Levels of Noise Sources Survey Method*).

2.1.3 Permissible Environmental Conditions

This washer/disinfector is designed to give optimal results under the following conditions:

- Indoor use only;
- Altitude of operation up to 6562 ft (2000 m);
- Temperature 41°F (5°C) to 104°F (40°C);
- Maximum relative humidity is 80% for temperatures up to 88°F (31°C), decreasing linearly to 50% relative humidity at 104°F (40°C);
- Pollution Degree 2.

Pollution degree 2: Equipment must be installed in an environment where normally only non-conductive pollution occurs but where occasional, temporary conductivity caused by condensation can be expected (as determined according to International Standard EN/IEC 61010-1, Second Edition).

2.1.4 Seismic Anchorage System

A seismic anchorage system (based on California requirements) is available for high-risk seismic zones.

2.2 Installation Checklist

After installing the washer/disinfector according to the *Uncrating/Installation Instructions* (P122992-165), complete the following checklist to help ensure complete and correct installation, or contact STERIS to schedule a service technician to test your installation and demonstrate proper equipment operation.

- ❑ Shutoff valves (not provided by STERIS) capable of being locked in OFF position only for maintenance purposes, installed on steam and water lines, and in compliance with local occupational health and safety regulations, as well as electric and plumbing codes for any special requirements that may pertain to installation of this washer/disinfector.

Questions? Contact FDA/CDRH/OCE/DID at CDRH-FOISTATUS@fda.hhs.gov or 301-796-8118

Records processed under FOIA Request 2011-7650; Released 1/25/12

- ❑ Disconnect switches (not provided by STERIS) capable of being locked in OFF position only for maintenance purposes, installed in electrical supply lines near the unit and in compliance with local occupational health and safety regulations, as well as electric and plumbing codes for any special requirements that may pertain to installation of this washer/disinfector.

  NOTE: If unit is installed next to other equipment, shutoff valves and disconnect switches should be located so service can be shut off to one piece of equipment at a time.

- ❑ Washer/disinfector positioned, as shown on equipment drawing (920-014-342), with required clearance space and in relation to building supply lines.
- ❑ Washer/disinfector is level. Use leveling legs if necessary.
- ❑ Building cold water line supplies water to washer/disinfector as specified on equipment drawing.
- ❑ Building hot water line supplies water to washer/disinfector as specified on equipment drawing.
- ❑ If washer/disinfector is steam-heated, building steam line provides steam to washer/disinfector as specified on equipment drawing.
- ❑ If washer/disinfector is steam-heated, building condensate-return line is connected to washer/disinfector as specified on equipment drawing.
- ❑ If washer/disinfector is steam-heated, purified water line supplies building purified water to washer/disinfector as specified on equipment drawing.
- ❑ Building air line supplies air to washer/disinfector as specified on equipment drawing.
- ❑ Building waste line is connected to washer/disinfector as specified on equipment drawing.
- ❑ If vented washer/disinfector, building ventilation system is connected to washer/disinfector as specified on equipment drawing.
- ❑ Electrical supply for washer/disinfector is as specified on equipment drawing.
- ❑ Pressure for air, water and steam supplies is within range specified on equipment drawing.
- ❑ Chemical injection pumps are connected to proper chemical injection lines and each chemical suction tube and float are placed in proper container.
- ❑ Chemical squeeze tubes have been lubricated.
- ❑ Floor underneath washer/disinfector has a noncombustible and nonslip surface or is covered with a metal sheet extending to the outer edges of the washer/disinfector.
- ❑ Walls surrounding washer/disinfector have a noncombustible surface.

  ***IMPORTANT:** After a few weeks of operation, inspect unit for leaks. Retighten all clamps and connections.*

> ⚠ **WARNING – POSSIBLE FIRE HAZARD: When washer/disinfector is installed on a combustible floor, floor must be covered with a metal sheet extending to the outer edges of washer/disinfector.**

Questions? Contact FDA/CDRH/OCE/DID at CDRH-FOISTATUS@fda.hhs.gov or 301-796-8118

Records processed under FOIA Request 2011-7650; Released 1/25/12

2.3 Detergents and Chemical Additives Specifications

When selecting detergents and chemical additives, to achieve optimal performance, the selected chemical additives must meet, as a minimum, the following specifications:

Product Description	Dilution Range (oz. /gallon) [mL/L]	pH Range Use-Dilution	Other Applicable Requirements
Alkaline Detergents	1/8 - 2 [1 - 16]	9.0 -12.0	Liquid, non-foaming, high-chelating ability, protein and blood compatible.
Acidic Detergents	1/4 - 2 [2 - 16]	3.0 - 6.0	Liquid, non-foaming, high-chelating ability, protein and blood compatible.
Neutral Detergents	1/8 - 2 [1 - 16]	6.0 - 8.0	Liquid, non-foaming, high-chelating ability, protein and blood compatible.
Enzymatic Cleaners	1/8 - 2 [1 - 16]	6.0 - 8.0	Liquid, low-foaming, fast-acting, compatible with a broad range of proteins, non-staining.
Instrument Lubricants	1/4 - 2 [2 - 16]	6.0 - 8.0	Liquid, non-foaming, neutral, with antimicrobial preservatives, high lubricity.
Descalers	2 [16]	< 2.5	Liquid, non-foaming, phosphoric acid based, free-rinsing.

NOTE: For cleaning and descaling products, note the following:

1) *Always use a non-foaming detergent for effective cleaning and proper pump operation.*
2) *Follow detergent manufacturer's recommendations to determine the temperature of the Wash treatment. Refer to* ***Table 5-1****, Cycle Description Chart, for available temperature ranges.*
3) *Follow detergent manufacturer's recommendations for amount of detergent to use depending on water hardness.*
4) *Contact STERIS for information on specific cleaning and descaling products recommended for use with this equipment.*

Questions? Contact FDA/CDRH/OCE/DID at CDRH-FOISTATUS@fda.hhs.gov or 301-796-8118

Records processed under FOIA Request 2011-7650; Released 1/25/12

To achieve maximum efficiency, select chemicals appropriate to soil type being processed. STERIS recommends the following chemicals:

- **Prolystica™ Ultra Concentrate Enzymatic Cleaner** – (liquid formula) a low-foaming, easy to rinse ultra concentrate using ten times less product than traditional enzymatic detergents.
- **Prolystica™ Ultra Concentrate Neutral Detergent** – (liquid formula) a low-foaming, easy to rinse ultra concentrate using ten times less product than traditional liquid detergents.
- **Prolystica™ Ultra Concentrate Lubricant** – (non-silicone-based formula) an ultra concentrate for instrument lubrication using ten times less product than traditional instrument lubricants.

  NOTE: A flow divider is required on each chemical injection pump to allow the use of the Prolystica Ultra Concentrate chemicals. Contact STERIS for more details.
- **Criti-Klenz® Liquid Concentrate Instrument Detergent** – safe alkaline concentrate using two to eight times less product than traditional liquid detergents.
- **Criti-Klenz® Instrument Detergent** – (alkaline) a liquid detergent for processing organic soils (blood, oil, fat, grease, protein, glucose).
- **Renu-Klenz™ Concentrate Neutral pH Instrument Detergent** – unique neutral pH concentrate using two to eight times less product than traditional liquid detergents.
- **Renu-Klenz™ Neutral pH Cleaner** – (neutral) a unique neutral pH instrument cleaner with Instrument Protection System, exceptional hard water tolerance, and extensive materials compatibility.
- **H-Klenz® II Instrument Detergent** – (strong alkaline) a highly concentrated non-foaming instrument cleaner. A Rinse treatment of C-A Klenz is needed to neutralize alkaline residues.
- **C-A Klenz® Instrument Detergent-Neutralizer** – (mild acid) a concentrated non-foaming mild acid neutralizer.
- **Klenzyme® Concentrate Plus Enzymatic Cleaner** – enzymatic concentrate using two to eight times less product than traditional enzymatic detergents.
- **EnzyCARE 2® Enzymatic Presoak and Cleaner** – dual enzymatic detergent for pre-rinse procedure.
- **Hinge-Free® Instrument Lubricant** – for instrument lubrication.
- **Dri 'N Shine® Concentrated Drying Agent** – for instrument lubrication phase.
- **Liquid Descaler Acid-Based Scale Remover** – for descaling washers used in healthcare facilities.

609

Questions? Contact FDA/CDRH/OCE/DID at CDRH-FOISTATUS@fda.hhs.gov or 301-796-8118

Records processed under FOIA Request 2011-7650; Released 1/25/12

NOTE: Certain products may not be available in your area. Contact STERIS for product availability and ordering information.

Follow detergent manufacturer's recommendations for amount of detergent to be used.

IMPORTANT: *STERIS does not promote, recommend or endorse the use of any other type of chemical additives in the processing of articles in the Reliance 444 Single-Chamber Washer/Disinfector, such as drying agents, strong alkaline detergents (pH>12), alcohol rinses and liquid germicides including sodium hypochlorite (bleach).*

Questions? Contact FDA/CDRH/OCE/DID at CDRH-FOISTATUS@fda.hhs.gov or 301-796-8118

Records processed under FOIA Request 2011-7650; Released 1/25/12

COMPONENT IDENTIFICATION

The Reliance® 444 Single-Chamber Washer/Disinfector is equipped with a fully-programmable microprocessor control system capable of storing up to ten cycles for processing a wide variety of loads. The control system monitors and automatically controls all cycle operations and functions.

Become familiar with all control locations and functions before operating the washer/disinfector (see Figure 3-1).

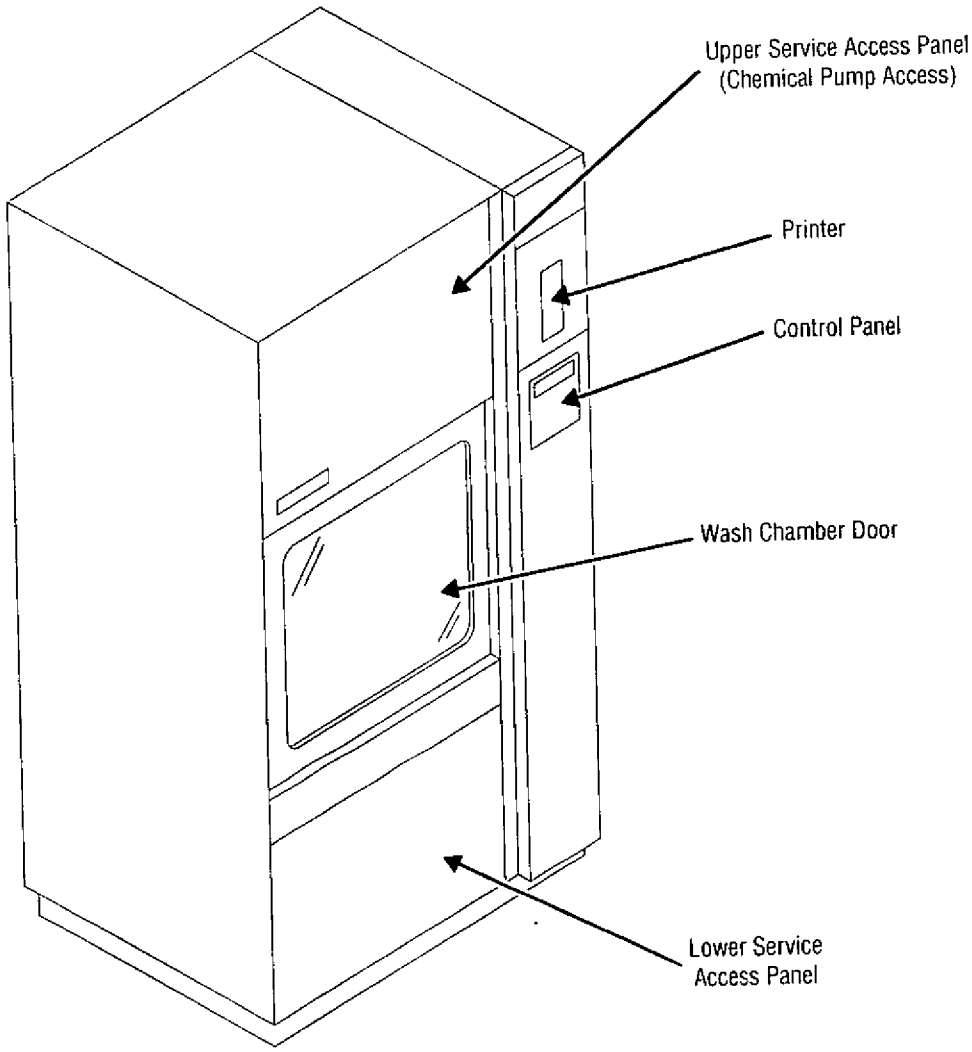

Figure 3-1. Reliance 444 Single-Chamber Washer/Disinfector

Questions? Contact FDA/CDRH/OCE/DID at CDRH-FOISTATUS@fda.hhs.gov or 301-796-8118
FOI - Page 923 of 1276

Records processed under FOIA Request 2011-7650; Released 1/25/12

3.1 Control Location

3.1.1 Power Switch

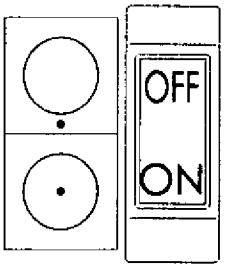

The **power** switch – used to shut off power to the unit control board and I/O board for maintenance purposes. **Power** switch is located under load side control, behind access cover panel (see Figure 3-2).

***IMPORTANT: Power** switch should remain in **ON** position at all times for normal operation.*

3.1.2 POWER-OFF/STANDBY Switch

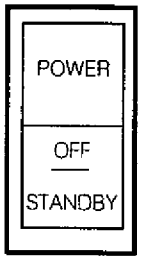

The **POWER-OFF/STANDBY** switch, located behind the printer door (see Figure 3-2), includes two settings which direct operation of the control.

- **POWER** – press top portion of rocker switch to initialize the controls and place control in Automatic mode.
- **OFF/STANDBY** – press bottom portion of rocker switch to initiate SHUTDOWN cycle and turn off all ac power to the control (Standby mode).

  NOTE: Control should be placed in Standby mode after last cycle of the day and when washer/disinfector is not in use for an extended period of time.

  ***IMPORTANT:** Placing **POWER-OFF/STANDBY** switch to **OFF/STANDBY** position DOES NOT turn **OFF** electrical power to the washer/disinfector.*

3.1.3 Printer

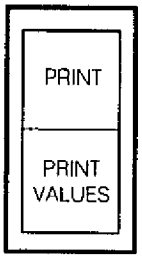

The printer records all cycle data on 2-1/4 inch wide single-ply thermal paper. Refer to *SECTION 6, ROUTINE MAINTENANCE,* for paper changing and paper ordering information.

The printer is located inside load side control panel, to the right of load door.

Printer Function switch – controls two printer functions, **PRINT** and **PRINT VALUES**:

- **PRINT** – pressing the top portion of the rocker switch generates a complete printout of the actual water temperature in sump and air temperature in drying chamber.
- **PRINT VALUES** – pressing the bottom portion of the rocker switch generates a complete printout of all cycle values.

Questions? Contact FDA/CDRH/OCE/DID at CDRH-FOISTATUS@fda.hhs.gov or 301-796-8118
FOI - Page 924 of 1276

Records processed under FOIA Request 2011-7650; Released 1/25/12

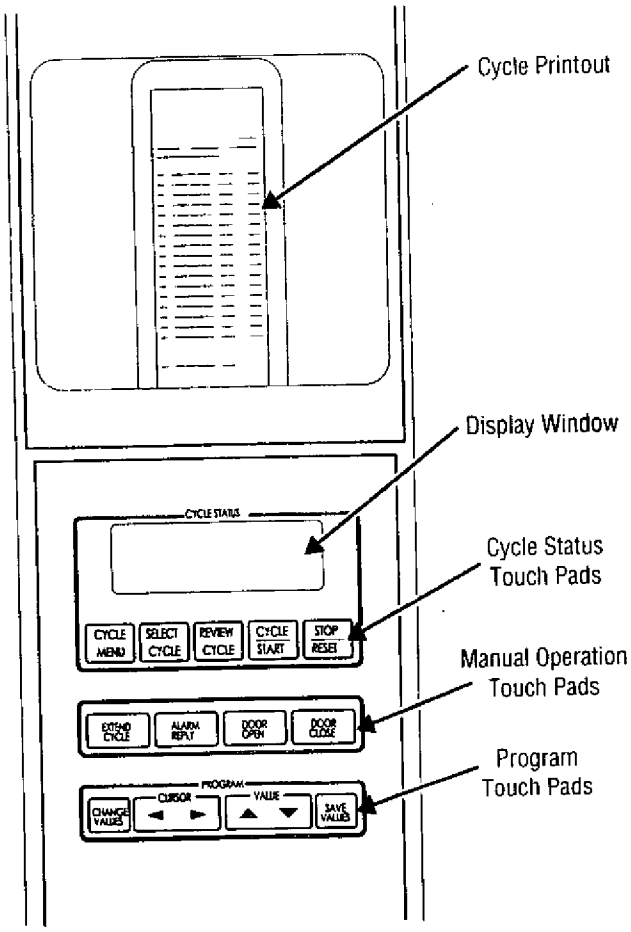

FRONT CONTROL PANEL

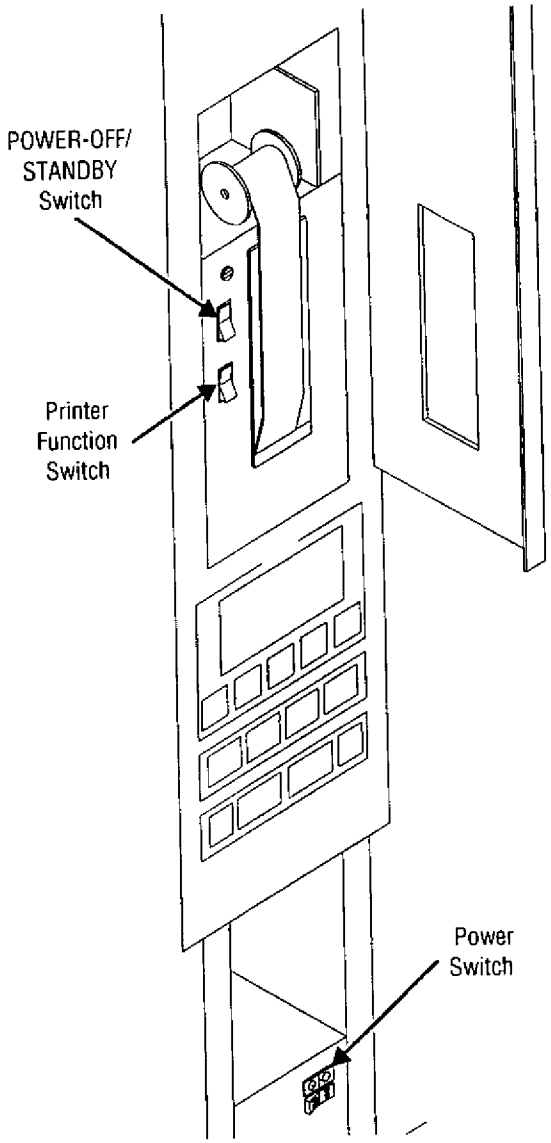

LOAD SIDE CONTROL AND PRINTER

NOTE: On double-door units, control panel is located on both load and unload sides of equipment. Printer is located on load side only.

Figure 3-2. Printer and Front Control Panel

Questions? Contact FDA/CDRH/OCE/DID at CDRH-FOISTATUS@fda.hhs.gov or 301-796-8118

Records processed under FOIA Request 2011-7650; Released 1/25/12

3.2 Load Side Control Panel

The load side control panel is used to direct all washer functions. The operator may select and review cycles and treatments, start, stop, or reset cycle operation and monitor cycle performance and washer status from the control panel.

Standard load side control panel includes a printer.

3.2.1 Display Screen

The two-line, alphanumeric screen displays cycle program data on demand, in-cycle performance data and operator instructions. Display screen also indicates certain abnormal conditions that may occur during a cycle (see Figure 3-2).

3.2.2 Touch Pads

Cycle Status Touch Pads:

CYCLE MENU touch pad – press to view the cycle menus. Three Cycle menus are available.

SELECT CYCLE touch pad – press to select one of the four cycles available from each Cycle menu.

NOTE: When a display cycle or treatment value is selected, the corresponding word or digit flashes.

REVIEW CYCLE touch pad – press to review the different treatments and values programmed for the selected cycle. Only those treatment values that can be modified by the operator are displayed. Refer to *SECTION 4, OPERATING INSTRUCTIONS*, for instructions on reviewing cycle values.

CYCLE/START touch pad – press once to display name of selected cycle. Press a second time to start the cycle. Refer to *SECTION 4, OPERATING INSTRUCTIONS*, for instructions on running a cycle.

*NOTE: The selected cycle name remains on the screen for five seconds after pressing **CYCLE/START** touch pad once. To start a cycle, **CYCLE/START** touch pad must be pressed a second time while the selected cycle name is displayed. If touch pad is not pressed within the five seconds, screen automatically returns to the Cycle menu.*

STOP/RESET touch pad – press once to stop operation of a cycle. Press a second time to abort cycle operation. Refer to *SECTION 4, OPERATING INSTRUCTIONS*, for instructions on how to stop and abort cycle operation.

*NOTE: When cycle is stopped, press **CYCLE/START** touch pad once to resume cycle operation. Cycle operation resumes at point where treatment was interrupted. When cycle is aborted, cycle operation is discontinued and cycle must be restarted from the beginning of the cycle. **STOP/RESET** touch pad is used to stop cycles and to exit menus after ending selections (pressing **STOP/RESET** touch pad always causes display to go back to previous menu).*

Questions? Contact FDA/CDRH/OCE/DID at CDRH-FOISTATUS@fda.hhs.gov or 301-796-8118
FOI - Page 926 of 1276

Records processed under FOIA Request 2011-7650; Released 1/25/12

Manual Operation Touch Pads:

EXTEND CYCLE touch pad – press to double the programmed treatment time while reviewing a cycle in Review Cycle mode. Refer to *SECTION 4, OPERATING INSTRUCTIONS,* for instructions on extending treatment time.

ALARM REPLY touch pad – press to stop intermittent alarm buzzer and acknowledge the display alarm message. Refer to *SECTION 6, ROUTINE MAINTENANCE,* for instructions on acknowledging alarms and *SECTION 7, TROUBLESHOOTING,* for specific alarm conditions and corrective actions.

DOOR OPEN touch pad (only if unit is equipped with power door) – press to automatically raise door to open position.

DOOR CLOSE touch pad (only if unit is equipped with power door) – press to automatically lower door to closed position.

Program Touch Pads:

CHANGE VALUES touch pad – press to modify, add, create or remove treatments from programmed cycles. Refer to *SECTION 5, CYCLE AND CONTROL VALUE PROGRAMMING,* for instructions on changing cycle values.

CURSOR arrows (left or right) – press to move left or right on the display screen.

VALUE arrows (up or down) – press to move up or down on the display screen and, depending on selected item, press to either toggle between answer selections or scroll through the alphabet and numbers 0 through 9.

NOTE: Alphabet includes characters for an underline and a space ().

SAVE VALUES touch pad – press to permanently store all treatment value and cycle changes in the control memory.

3.3 Unload Side Control Panel

The unload side control panel features the same touch pads and display as the load side control panel. The display window concurrently shows the same message as shown in display window on the load side of the unit.

Standard unload side control panel does not include a printer.

Questions? Contact FDA/CDRH/OCE/DID at CDRH-FOISTATUS@fda.hhs.gov or 301-796-8118

Records processed under FOIA Request 2011-7650; Released 1/25/12

3.4 Reliance ATS Automated Transport System (Option)

See Figure 3-3.

The Reliance® ATS Automated Transport System is designed to load and unload the Reliance 444 Single-Chamber Washer/Disinfector.

For more detailed information about the Reliance ATS Automated Transport System, refer to *Operator Manual* (P122995-004).

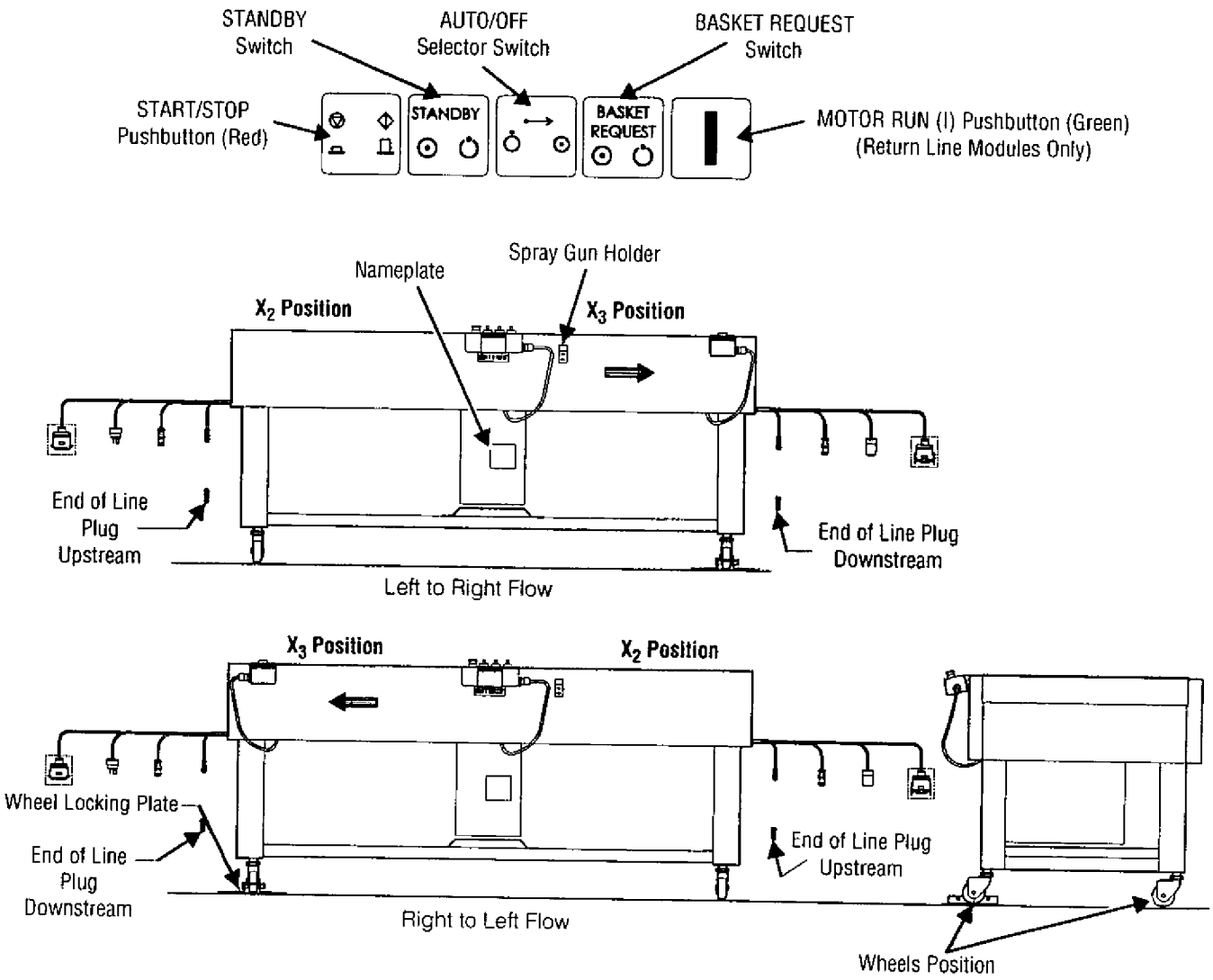

Figure 3-3. Reliance ATS Automated Transport System Side View (Typical)

Questions? Contact FDA/CDRH/OCE/DID at CDRH-FOISTATUS@fda.hhs.gov or 301-796-8118
FOI - Page 928 of 1276

Records processed under FOIA Request 2011-7650; Released 1/25/12

3.5 SCS Conveyor System (Option)

See Figure 3-4.

The SCS Conveyor System is designed to be used in processing departments of healthcare facilities, to provide loading and unloading of 24 x 24" (610 x 610 mm) accessory racks or baskets to interface with the Reliance 444 Single-Chamber Washer/Disinfector.

Refer to *Operator Manual* (P920506-634) for more detailed information about the SCS Conveyor System.

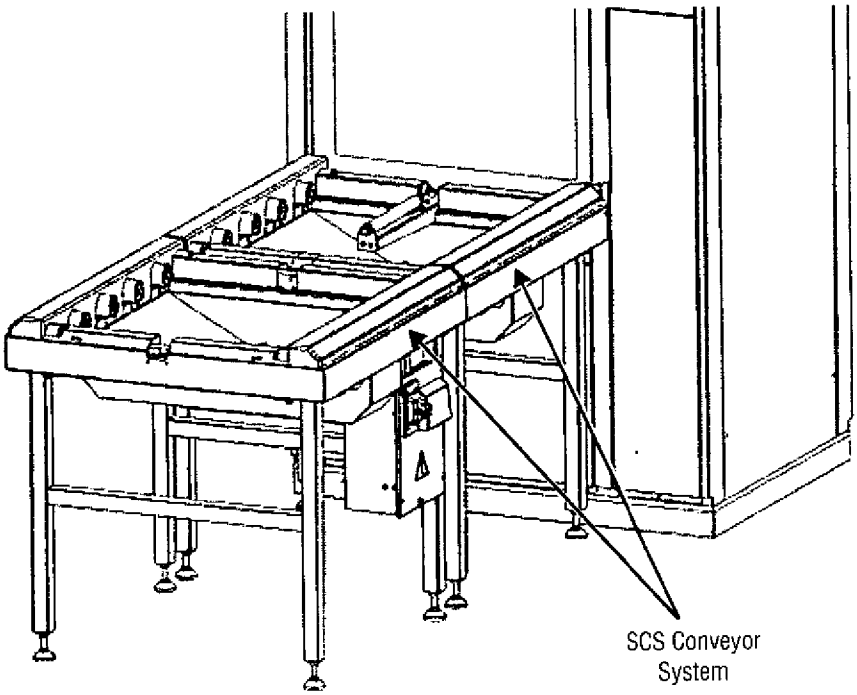

Figure 3-4. SCS Conveyor System (Option)

Questions? Contact FDA/CDRH/OCE/DID at CDRH-FOISTATUS@fda.hhs.gov or 301-796-8118

Records processed under FOIA Request 2011-7650; Released 1/25/12

Healthcare
Capital Equipment

Questions? Contact FDA/CDRH/OCE/DID at CDRH-FOISTATUS@fda.hhs.gov or 301-796-8118

Records processed under FOIA Request 2011-7650; Released 1/25/12

OPERATING INSTRUCTIONS

4

IMPORTANT: *A listing of the Safety Precautions to be observed when operating and servicing this washer/disinfector can be found in SECTION 1 of this manual. Do not operate the equipment until you have become familiar with this information.*

4.1 Before Operating Equipment

WARNING – BURN HAZARD:

- **Except for an emergency, do not open door when cycle is in progress. In an emergency, first stop cycle by pressing the STOP/RESET touch pad, and wait for water flow to stop. Wear appropriate Personal Protective Equipment (PPE) whenever reaching into the chamber.**
- **After pressing the STOP/RESET touch pad, wait until water flow stops; then, open door slowly. Hot water/steam may be sprayed through door opening if door is opened too soon.**

WARNING–PERSONAL INJURY HAZARD: Risk of pinch point between door and upper panel. Do not push on top portion of doors; do not push on door when door is rising; do not push on door when door is jammed.

WARNING–SLIPPING HAZARD: To prevent slips, keep floors dry. Promptly clean up any spills or drippage. For spills or drippage of detergents or other chemicals, follow safety precautions and handling procedures set forth on detergent or chemical label and/or Material Safety Data Sheet (MSDS).

Refer to *SECTION 5, CYCLE AND CONTROL VALUE PROGRAMMING,* if you want to change cycles, cycle values or control values.

1. Verify building electrical disconnect switch (circuit breaker) is positioned to **ON**.
2. Verify unit supply valves are open.
3. Ensure **power** switch (located under load side control and printer) is in **ON** position (refer to Figure 3-2).
4. Put **POWER-OFF/STANDBY** switch (located behind control door) to **POWER** position.
5. Open chamber door.
6. Verify wash chamber is empty and all packing material has been removed.
7. Ensure bottom filters are clean and in place.
8. Close chamber door.
9. Open printer door and verify printer for sufficient amount of paper. A colored warning stripe is visible when paper roll is near end. Refer to *SECTION 6.8, CHANGING PRINTER PAPER ROLL,* if paper roll needs to be replaced.

   NOTE: Do not operate printer without paper.
10. Verify chemical supply at a remote location (up to eight feet [2.40 m] off ground and 50 feet [15.3 m] from washer). Ensure suction tube(s) and low level sensor(s) are placed in container(s); see Figure 4-1.

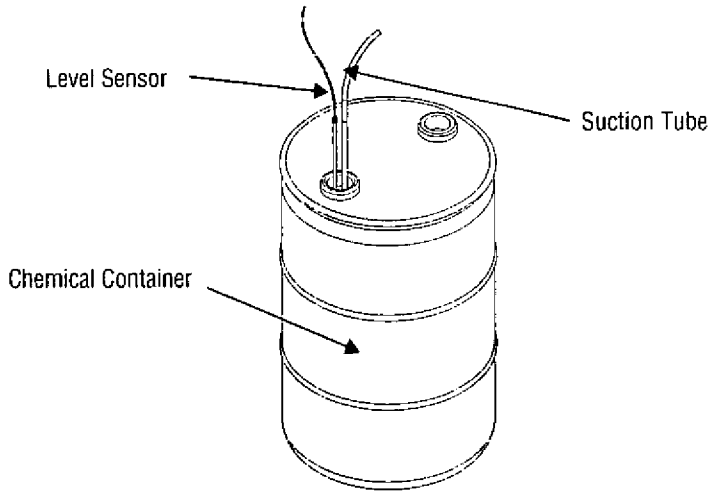

Figure 4-1. Chemical Container

Questions? Contact FDA/CDRH/OCE/DID at CDRH-FOISTATUS@fda.hhs.gov or 301-796-8118

Records processed under FOIA Request 2011-7650; Released 1/25/12

CAUTION – POSSIBLE EQUIPMENT DAMAGE:

- **Always position each manifold and/or bottom rotary spray over a manifold connector before operating unit. If manifolds and/or bottom rotary sprays are not positioned correctly, damage will result and unit will be unable to effectively wash load.**
- **Always select a cycle appropriate for the items being processed. Failure to do so may result in product damage.**
- **When choosing a detergent, select one with a low-chloride content. Detergents with a high-chloride content must not be used, as such detergents may harm stainless steel.**

If supply is low or has run out, install new container and prime associated chemical pump. Refer to *SECTION 6.5, CHEMICAL CONTAINER REPLACEMENT*, for detergent container replacement instructions and see *SECTION 4.2, PRIMING PROCEDURE*, for priming procedure.

IMPORTANT: *DO NOT insert suction tube into container without verifying it is for the proper application (refer to SECTION 2.3, DETERGENTS AND CHEMICAL ADDITIVES SPECIFICATIONS, for details).*

11. To achieve maximum cleaning efficiency, select detergents appropriate to soil type being processed.

    NOTE: For cleaning and descaling products, note the following;

    1) Always use a non-foaming detergent for effective cleaning and proper pump and water-level operation.

    *2) Refer to SECTION 2.3, DETERGENTS AND CHEMICAL ADDITIVES SPECIFICATIONS, and follow detergent manufacturer's recommendations to determine the temperature of the Wash treatment. Refer to **Table 5-1**, Cycle Description Chart, for available temperature ranges.*

    3) Follow detergent manufacturer's recommendations for amount of detergent to use depending on water hardness.

    4) Contact STERIS for information on specific cleaning and descaling products recommended for use with this equipment.

4.2 Priming Procedure

WARNING – CHEMICAL BURN AND/OR EYE INJURY HAZARD: Detergents are caustic and can cause adverse effects to exposed tissues. Do not get in eyes, on skin or attempt to swallow. Read and follow the precautions and instructions on the detergent label and in the Material Safety Data Sheet (MSDS) prior to handling the detergent, refilling the detergent container or servicing the detergent injection pump and lines. Wear appropriate Personal Protective Equipment (PPE) whenever handling the detergent or servicing the detergent injection pump and lines.

1. Open load side door.
2. Use **CYCLE MENU** touch pad to scroll to third Cycle menu.
3. Use **SELECT CYCLE** touch pad to select **PRIME**.
4. Press **CYCLE/START** touch pad to start priming. Display shows:

PUMP TO PRIME?
(PUMP NAME) BLINKING

5. Scroll through pump names, using **VALUE arrows** (up or down) until pump to be primed is displayed.
6. Press **CYCLE/START** touch pad to confirm pump selection. Display shows:

PRESS AND HOLD START
TO PRIME (PUMP NAME)

7. Press **CYCLE/START** touch pad and hold for 30 to 60 seconds (allow 1 to 2 minutes for priming line first time) until a few drops of detergent come out of bottom of side wall baffle (detergent injector is located inside wash chamber, between double wall on control column side).
8. Release **CYCLE/START** touch pad to stop priming operation.

Questions? Contact FDA/CDRH/OCE/DID at CDRH-FOISTATUS@fda.hhs.gov or 301-796-8118
FOI - Page 932 of 1276

Records processed under FOIA Request 2011-7650; Released 1/25/12

9. Press **STOP/RESET** touch pad when priming is complete.
10. For lubricant injection, verify suction tube in container to ensure pump is priming.

4.3 Accessories

STERIS provides a complete line of accessories for use with this equipment. Contact STERIS for more information on these products.

IMPORTANT: *Maximum loading weight (accessory and accessory contents) inside Reliance® 444 Single-Chamber Washer/Disinfector is 135 lb (61 kg).*

NOTE: The nature of the item to be processed can require additional actions such as dismantling for separate processing, manual pre-cleaning of difficult surfaces, etc., prior to the item being processed in the washer/disinfector.

To properly clean items and to avoid personal injuries, always follow these general loading guidelines:

- Ensure no items stick out or hang out of rack. Always use a rack designed to handle appropriate type of items to be processed.
- All hinged surgical instruments with handles (such as scissors, hemostats and forceps) must be stringed before being placed in a rack, to optimize cleaning of the hinges. A maximum of 50 items, open at a 90 degree angle, may be placed in each instrument tray.
- Instruments must always be placed in an instrument tray for processing, never alone on a manifold rack.
- Specific accessories have been designed to handle trays, basins, bowls and bedpans.
- Miscellaneous articles can be placed in a general purpose rack, with or without a hold-down screen.

  ADVISORY: *Microsurgery instrument containers must be placed in a general purpose rack, with cover opened or removed before processing. Always use the GENTLE cycle with microsurgery instruments.*

Questions? Contact FDA/CDRH/OCE/DID at CDRH-FOISTATUS@fda.hhs.gov or 301-796-8118

Records processed under FOIA Request 2011-7650; Released 1/25/12

- **Two-level manifold rack** (see Figure 4-2) is designed to hold trays of surgical instruments and hard goods individually on each level.
- **Three-level manifold rack** (see Figure 4-3) is designed to hold a general purpose rack, or one or two instrument trays on the bottom level, a general purpose rack, or one or two instrument trays on the middle level, and one or two instrument trays on the upper level.

  NOTE: General purpose racks can be used at high speed inside a two or three-level manifolded racks.

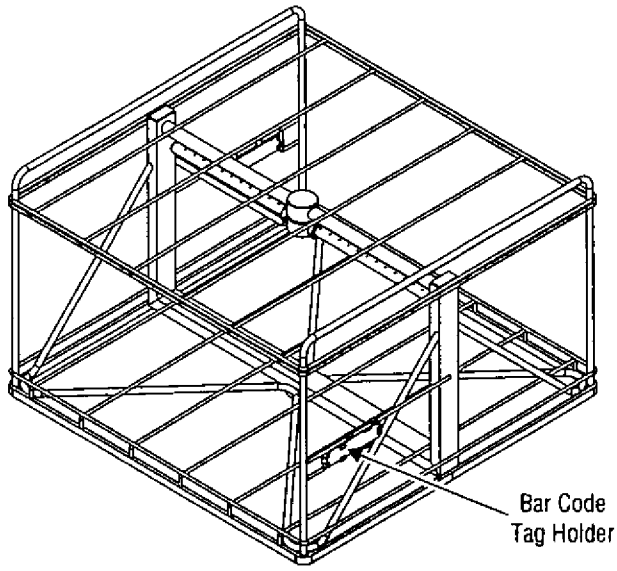

Figure 4-2. Two-Level Manifold Rack

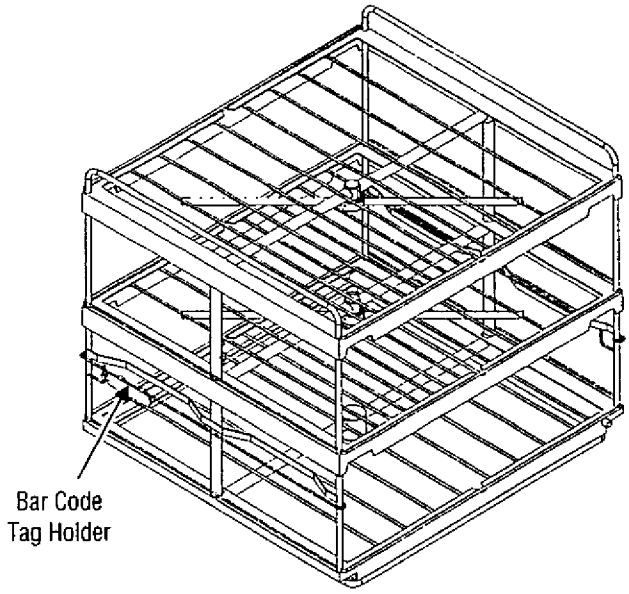

Figure 4-3. Three-Level Manifold Rack

Questions? Contact FDA/CDRH/OCE/DID at CDRH-FOISTATUS@fda.hhs.gov or 301-796-8118
FOI - Page 934 of 1276

Records processed under FOIA Request 2011-7650; Released 1/25/12

- **Four-level manifold rack** (see Figure 4-4) is designed to hold one or two instrument trays on each level.
- **Five-level manifold rack** (see Figure 4-5) is designed to hold two mesh instrument trays on each level.

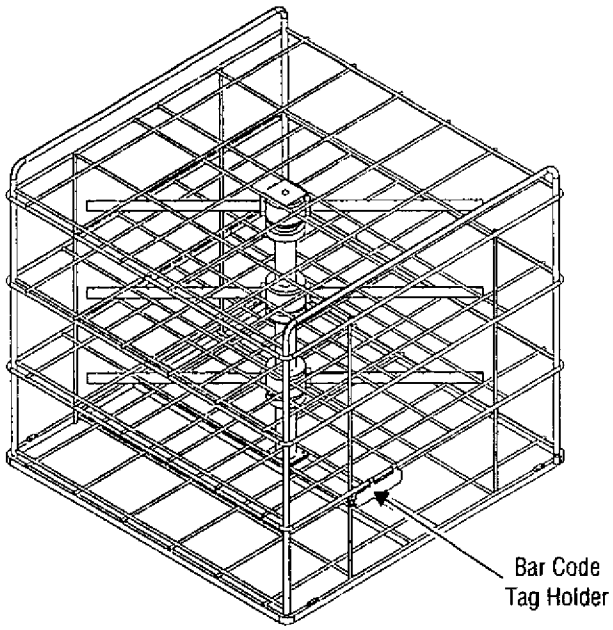

Figure 4-4. Four-Level Manifold Rack

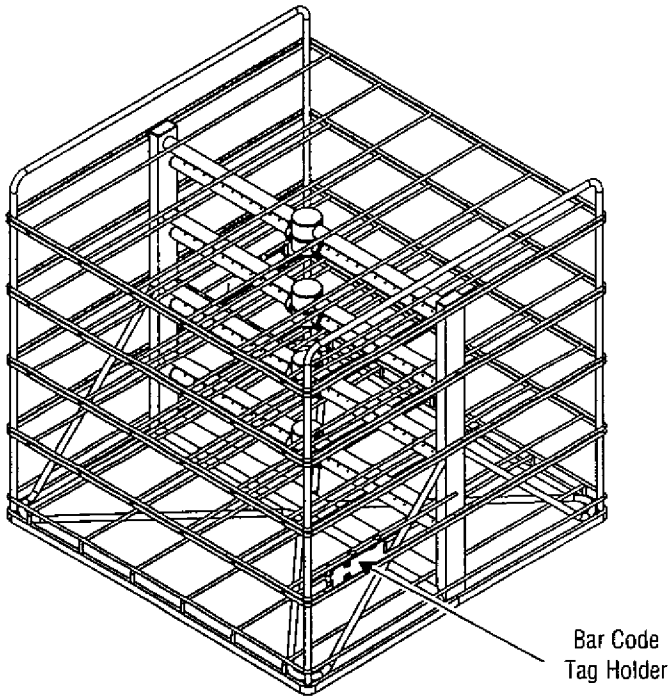

Figure 4-5. Five-Level Manifold Rack

Questions? Contact FDA/CDRH/OCE/DID at CDRH-FOISTATUS@fda.hhs.gov or 301-796-8118

Records processed under FOIA Request 2011-7650; Released 1/25/12

- **Anesthesia/respiratory rack** (see Figure 4-6) is designed to hold different types of tubing and medical devices during processing in the washer/disinfector.

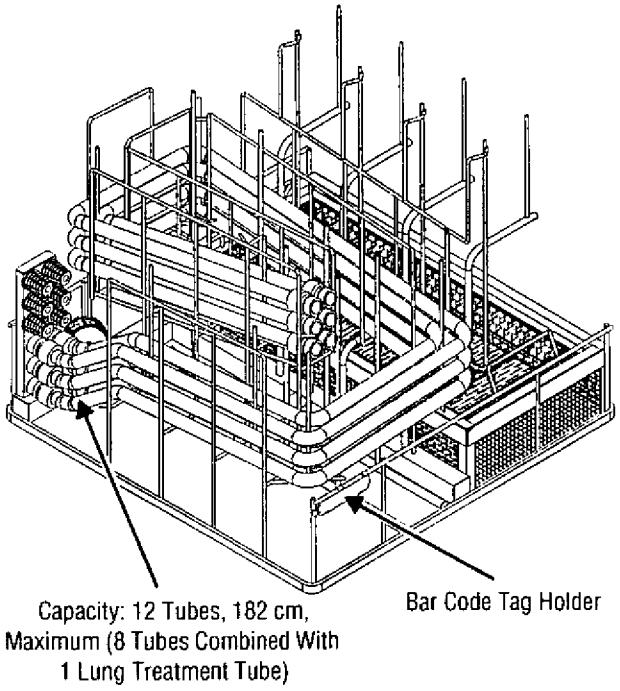

Respiratory Tubing Arrangement

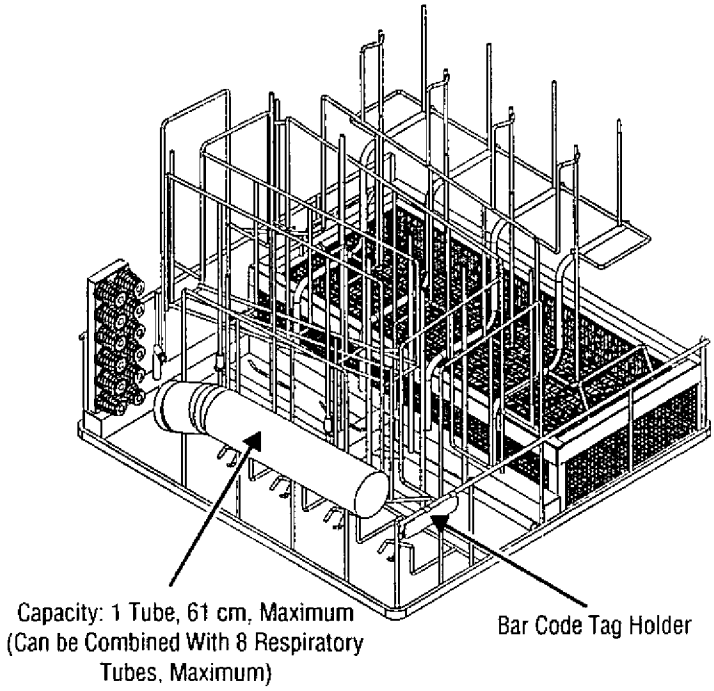

Lung Treatment Tube Arrangement

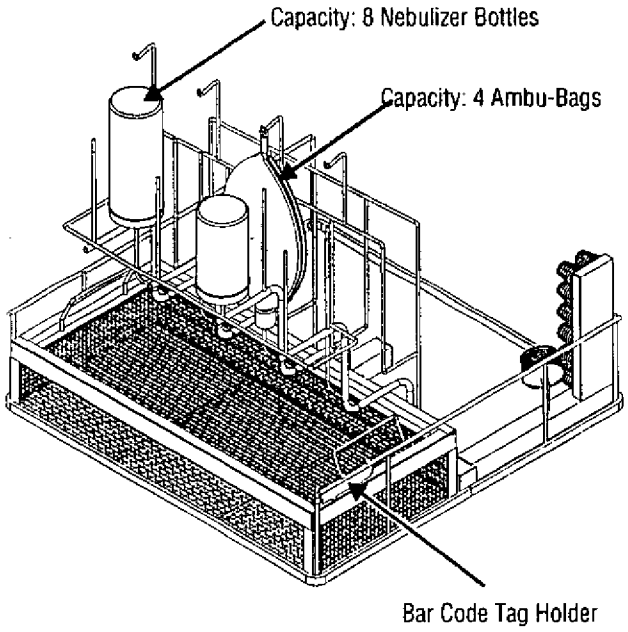

Nebulizer Bottles, Ambu-Bags Arrangement

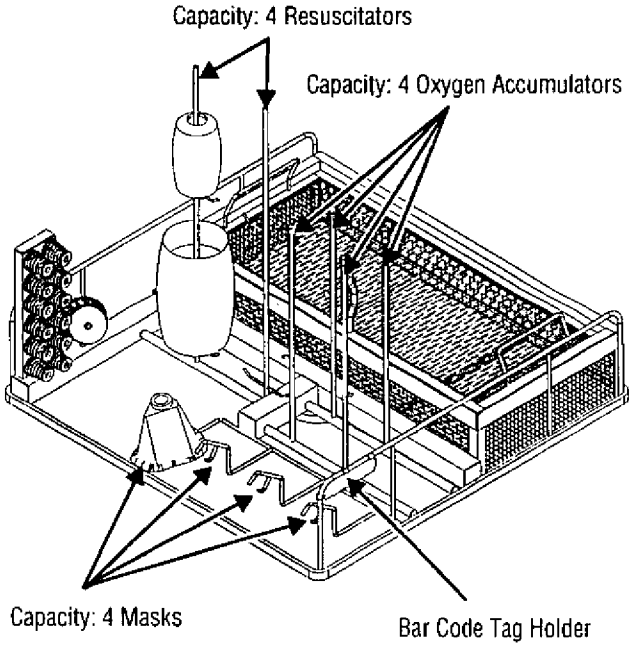

Resuscitators, Oxygen Accumulators, Masks Arrangement

Figure 4-6. Anesthesia/Respiratory Rack

Questions? Contact FDA/CDRH/OCE/DID at CDRH-FOISTATUS@fda.hhs.gov or 301-796-8118

Records processed under FOIA Request 2011-7650; Released 1/25/12

- **Hold-down screen** (see Figure 4-7) is designed to retain small miscellaneous objects in place. Use in combination with instrument trays, two-level manifold rack and three-level manifold rack.
- **Suction tips and instrument rack** (see Figure 4-8) is designed to hold one or two instrument trays on the bottom level (including up to eight suction tips with luer lock on mesh basket luer lock holder, and miscellaneous items inside of mesh basket), and one or two instrument trays on the middle and upper levels, as well as up to ten large suction tips on special connectors located on side of rack. Ensure connecting mesh basket water supply hose to its dedicated port on bottom level of the four-level suction tips and instrument rack.

  ADVISORY NOTE: *STERIS does not recommend the use of suction tips and instrument racks for processing endoscopes, laparoscopes or other instruments used for minimally invasive surgery. Processing these types of instruments may result in equipment damage as well as improperly cleaned items.*

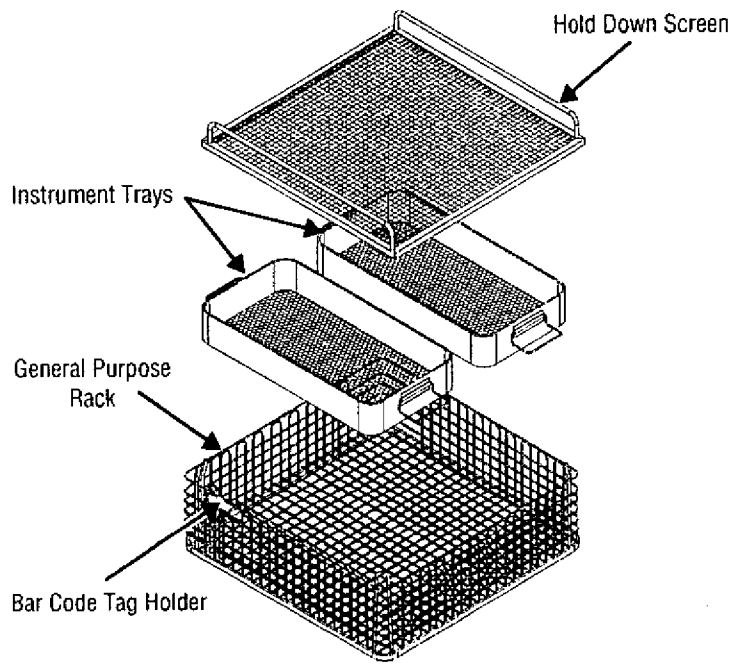

Figure 4-7. Hold Down Screen (For Low Speed Only)

Questions? Contact FDA/CDRH/OCE/DID at CDRH-FOISTATUS@fda.hhs.gov or 301-796-8118

Records processed under FOIA Request 2011-7650; Released 1/25/12

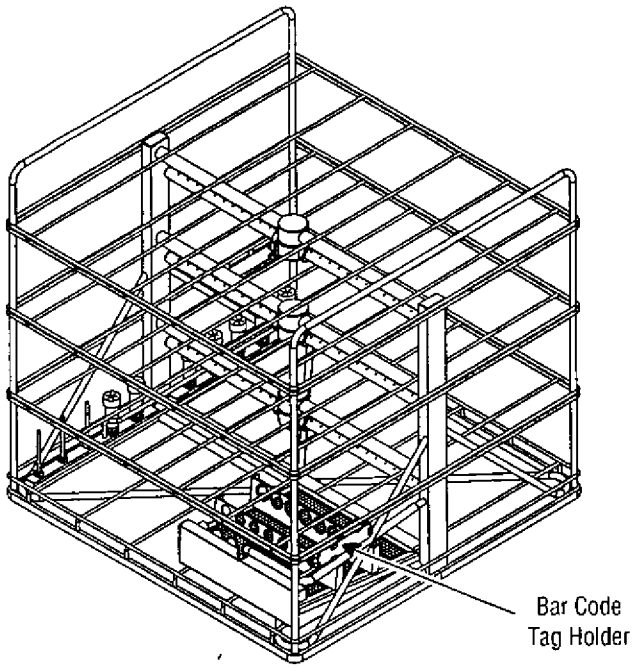

Figure 4-8. Suction Tips and Instrument Rack

- **Rigid MIS instrument rack** (see Figure 4-9) is designed for efficient cleaning, rinsing, drying and low-level thermal disinfection of rigid minimally invasive surgical instruments such as end caps, compression springs, as well as non-cannulated items on the lower-level compartments, cannulated instruments, trocars, sleeves, reducer sleeves, bridges and automatic flap valves on upper level rack. Refer to the Rigid MIS instrument rack *Operator Manual* (P920003-690) for more information on loading and routine maintenance.

  IMPORTANT: *Rigid MIS instrument rack is designed to be used in conjunction with the Reliance 444 Single-Chamber Washer/ Disinfector equipped with the Enzyme treatment option.*

  ADVISORY NOTE: *STERIS does not intend, recommend nor represent in any way the Rigid MIS instrument rack be used for the terminal disinfection or sterilization of any regulated medical device. If medical devices will be contacting blood or compromised tissues, such devices must be terminally processed in accordance with Good Hospital Practices before each use in human patients.*

  The Rigid MIS instrument rack is specifically designed to only process goods as outlined in *Operator Manual* (P920003-690). If there is any doubt about a specific material or product, contact the instrument manufacturer for recommended washing techniques.

Questions? Contact FDA/CDRH/OCE/DID at CDRH-FOISTATUS@fda.hhs.gov or 301-796-8118

Records processed under FOIA Request 2011-7650; Released 1/25/12

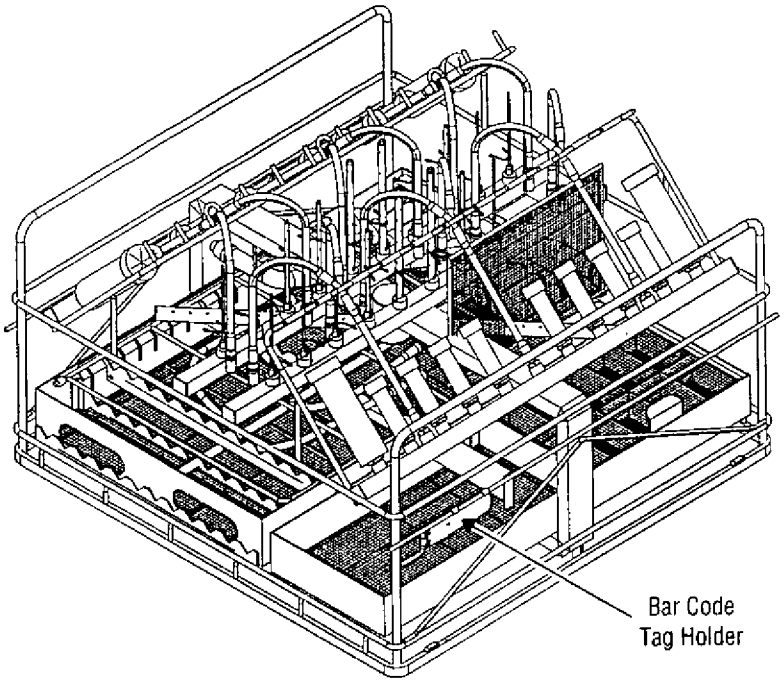

Figure 4-9. Rigid MIS Instrument Rack

CAUTION – POSSIBLE EQUIPMENT DAMAGE: Non-manifolded one-level racks are not appropriate for high pump speed. Water pressure may lift rack.

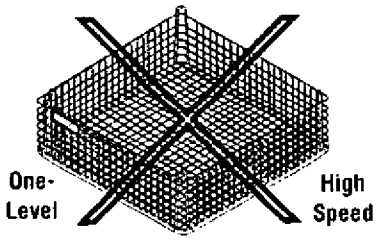

- **Multi-purpose basin rack** (see Figure 4-10) is designed to hold up to 26 basins of various shapes (round, square, rectangle) and sizes, as well as kidney bowls. For low speed only.

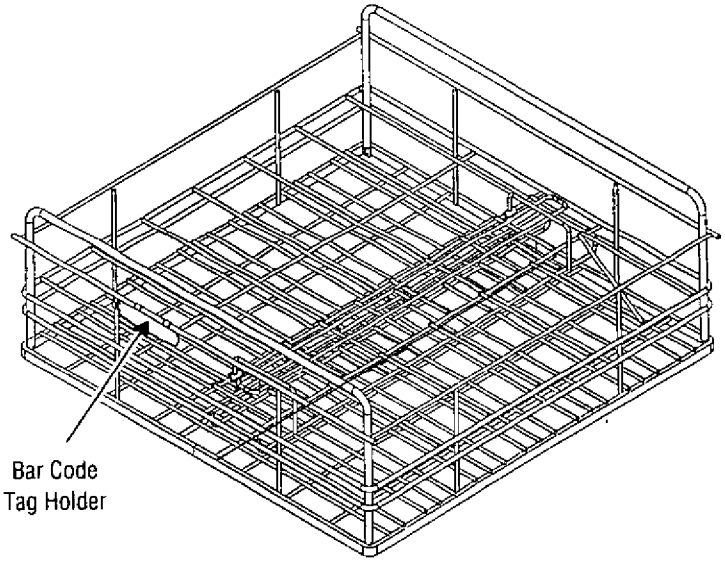

Figure 4-10. Multipurpose Basin Rack

Questions? Contact FDA/CDRH/OCE/DID at CDRH-FOISTATUS@fda.hhs.gov or 301-796-8118

Records processed under FOIA Request 2011-7650; Released 1/25/12

- **Kidney bowl rack** (see Figure 4-11) is designed to hold up to 20 kidney bowls of various sizes. For low speed only.
- **Bedpan rack** (see Figure 4-12) is designed to hold up to eight bedpans upright.

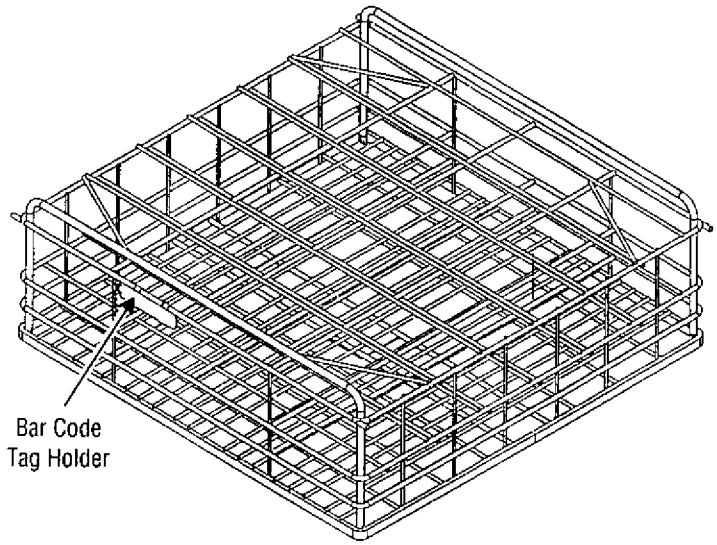

Figure 4-11. Kidney Bowl Rack (For Low Speed Only)

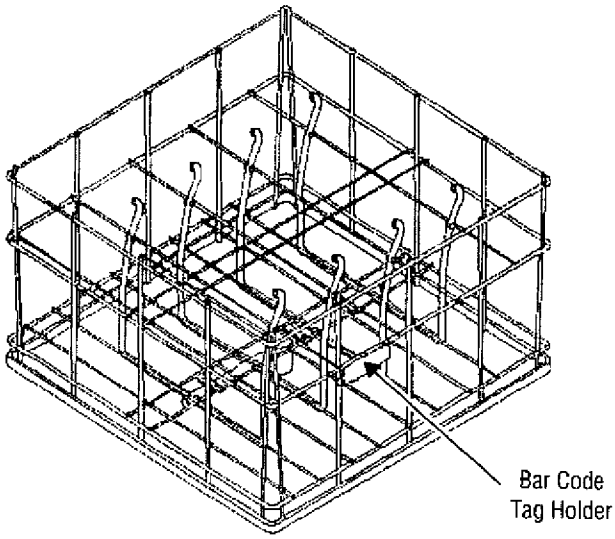

Figure 4-12. Bedpan Rack

Questions? Contact FDA/CDRH/OCE/DID at CDRH-FOISTATUS@fda.hhs.gov or 301-796-8118

Records processed under FOIA Request 2011-7650; Released 1/25/12

4.4 Loading Unit Without Conveyor Modules

WARNING–PERSONAL INJURY AND/OR EQUIPMENT DAMAGE HAZARD:

- **Always load empty baskets on appropriate loading cart or surface.**
- **Do not place empty baskets directly on conveyor modules. if you do, proximity sensor will detect basket and indexing will automatically start.**

WARNING–PERSONAL INJURY HAZARD: Risk of pinch point between door and upper panel. Do not push on top portion of doors; do not push on door when door is rising; do not push on door when door is jammed.

CAUTION – POSSIBLE EQUIPMENT DAMAGE:

- **Always position each manifold and/or bottom rotary spray over a manifold connector before operating unit. If manifolds and/or bottom rotary sprays are not positioned correctly, damage will result and unit will be unable to effectively wash load.**
- **Suction Tips (as well as other items) must be fully enclosed within the accessory (curved suction tips facing inward) to prevent obstruction in conveyor modules.**
- **Always select a cycle appropriate for the items being processed. Failure to do so may result in product damage.**

NOTE: Review SECTION 7, TROUBLESHOOTING, to identify the cause of any abnormal condition during a cycle or if unit fails to complete a cycle.

This procedure is used if facility is not equipped with a SCS Conveyor System or a Reliance® ATS Automated Transport System or if the conveyor system is not in function.

1. Use transfer cart to bring fully loaded basket or accessory next to washer/disinfector.

   ***IMPORTANT:** Maximum loading weight (accessory and accessory contents) inside Reliance 444 Single-Chamber Washer/Disinfector is 135 lb (61 kg).*

2. Ensure plasticware and/or metalware is positioned correctly on manifolds and/or in baskets.
   - When loading basket, bowls must be placed open and facing down in basket.
   - If lightweight plasticware or metalware is being washed, use cover to prevent items from turning.
   - Verify no items stick out or hang out of rack. Always use a rack designed to handle appropriate type of items to be processed.
3. Press **DOOR OPEN** touch pad to open load door. Slide loaded manifolds and/or baskets into wash chamber. Verify each manifold and/or basket is positioned over manifold connector.
4. Press **DOOR CLOSE** touch pad to close door.
5. When door is closed, Cycle menu appears on display.
6. Use **SELECT CYCLE** touch pad to select desired cycle, and press **CYCLE/START** touch pad twice to initiate cycle.
7. Cycle proceeds through selected cycle treatments.

Questions? Contact FDA/CDRH/OCE/DID at CDRH-FOISTATUS@fda.hhs.gov or 301-796-8118

Records processed under FOIA Request 2011-7650; Released 1/25/12

4.5 Loading Unit With Conveyor Modules

⚠ WARNING–PERSONAL INJURY AND/OR EQUIPMENT DAMAGE HAZARD:

- **Always load empty baskets on appropriate loading cart or surface.**
- **Do not place empty baskets directly on conveyor modules. if you do, proximity sensor will detect basket and indexing will automatically start.**
- **Risk of pinch point between door and upper panel. Do not push on top portion of doors; do not push on door when door is rising; do not push on door when door is jammed.**
- **If an obstruction is present in the wash chamber door, door safety sensor will detect obstruction and door will automatically stop closing. Wait until door is fully open and water flow has stopped before removing obstruction.**

⚠ WARNING–PERSONAL INJURY HAZARD:

- **In case of an emergency situation involving conveyor modules, always press START/STOP pushbutton to stop all conveyor operation.**
- **In case of an emergency situation involving SCS-FO or SCS-2W-FO conveyor, depressurize conveyor line by pressing Pressure-Release pushbutton on SCS-FO or SCS-2W-FO conveyor.**
- **When baskets are present on conveyor modules, keep fingers and hands away from wash chamber doors and moving baskets.**

This procedure is used if facility is equipped with a SCS Conveyor System or a Reliance ATS Automated Transport System.

Ensure appropriate cycle parameters are set in the control before beginning operation of the washer/disinfector.

IMPORTANT: *For SCS Conveyor System, refer to Operator Manual (P920506-634) for more detailed information about non-motorized or motorized loading and transporting procedure.*

IMPORTANT: *For Reliance ATS Automated Transport System, refer to Operator Manual (P122995-004) or more detailed information about loading and transporting procedure.*

NOTE: While loading, note the following:

1) *For automatic indexing, proper bar code tag (according to items being processed) must be attached to basket. See Figure 4-13 on how to insert bar code tag inside bar code tag holder easily. See Figures 4-2 to 4-12 for bar code installation on each accessory.*
2) *Review SECTION 7, TROUBLESHOOTING, to identify the cause of any abnormal condition during a cycle or if unit fails to complete a cycle.*

1. Place items to be processed into basket or accessory rack.

   IMPORTANT: *Maximum loading weight (accessory and accessory contents) inside Reliance 444 Single-Chamber Washer/Disinfector is 135 lb (61 kg).*

   - Verify plasticware and/or metalware is positioned correctly on manifolds and/or in baskets.
   - When loading a basket, bowls must be placed open end down in basket.
   - If lightweight plasticware or metalware is being washed, use a cover to prevent items from turning.
   - Verify no items stick out or hang out of rack. Always use a rack designed to handle appropriate type of items to be processed.

2. Select desired bar code tag depending on load to be processed (see **Table 4-1**).

Questions? Contact FDA/CDRH/OCE/DID at CDRH-FOISTATUS@fda.hhs.gov or 301-796-8118

Records processed under FOIA Request 2011-7650; Released 1/25/12

Table 4-1. Cycle Names and Bar Code Tag Numbers

CODE	CYCLE NAME	USE
00	INSTRUMENTS	For processing surgical instruments.
01	UTENSILS	For processing bedpans, trays, basins and bowls.
03	GLASSWARE	For processing beakers, bottles and jars.
04	PLASTIC GOODS	For processing plasticware.
05	ANESTHESIA/ RESPIRATORY GOODS	For processing anesthesia tubing.
06	GENTLE CYCLE	For processing delicate surgical instruments.
07*	RIGID MIS	For processing rigid minimally invasive surgery instruments.
07*	CYCLE 7	For custom-programmed processing.
08	CYCLE 8	For custom-programmed processing
09	CYCLE 9	For custom-programmed processing
10**	CYCLE 10	For custom-programmed processing
***	DECONTAM*	Decontamination cycle

** RIGID MIS cycle is available* ***only if unit is equipped with the Enzyme option (factory-set)****. In this case, custom CYCLE 07 is not available, and bar code tag 07 is used for RIGID MIS cycle.*

*** This cycle does not guarantee complete washing/disinfection unless verified by the operator because of the high level of flexibility allowed in the cycle selections.*

**** There is no bar code tag for the DECONTAM cycle.*

NOTE: If you do not have a bar code tag, see SECTION 4.6, MANUAL ENTRY OF BAR CODE IDENTIFICATION NUMBER, for manual entry of cycle code.

3. Place desired bar code tag in bar code tag holder (see Figure 4-13).
4. Bar code tag reader is located next to washer/disinfector load door. Bar code tag must face side of load door where bar code tag reader is located. Ensure bar code tag is positioned correctly and is in legible condition (see Figure 4-13).

   NOTE: If a bar code tag is not available or if the available tag is not legible, the operator can select and start a cycle manually.

⚠ CAUTION – POSSIBLE EQUIPMENT DAMAGE:

- **Suction Tips (as well as other items) must be fully enclosed within the accessory (curved suction tips facing inward) to prevent obstruction in conveyor modules.**
- **Always select a cycle appropriate for the items being processed. Failure to do so may result in product damage.**

Questions? Contact FDA/CDRH/OCE/DID at CDRH-FOISTATUS@fda.hhs.gov or 301-796-8118

Records processed under FOIA Request 2011-7650; Released 1/25/12

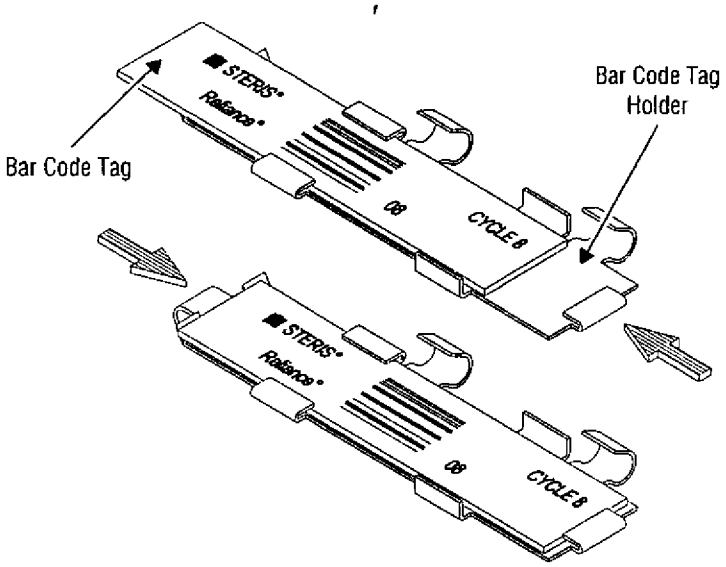

Figure 4-13. Bar Code Tag Insertion

> ⚠ **WARNING–PERSONAL INJURY AND/OR EQUIPMENT DAMAGE HAZARD: When placing basket on conveyor module, ensure basket support hook is in closed position; i.e., flush with side of basket.**

5. **If facility is equipped with a SCS Conveyor System:**
   a. Use a transfer cart to bring fully loaded basket or accessory rack next to conveyor.
   b. Apply brakes (located on rear wheels of transfer cart) and ensure both transfer cart wheels are locked and swiveling is not possible.
   c. Slightly push loaded basket or accessory rack toward edge of conveyor equipped with a transfer cart adaptor.

      IMPORTANT: *Conveyor is equipped with a transfer cart adaptor (accessory) to allow easy and safe transfer of basket or accessory rack from cart to conveyor. Refer to SCS Conveyor System Uncrating/Installation Instructions (P920506-633) for more detailed information.*

   d. **If basket or accessory rack is transferred to a non-motorized conveyor**, keep pushing basket or accessory rack until it reaches edge of washer/disinfector.

   or:

      If basket or accessory rack is transferred to a motorized conveyor, conveyor motorized rollers route and place accessory rack or basket in proper position near edge of washer/disinfector.

6. **If facility is equipped with a Reliance ATS Automated Transport System:**
   a. Use a transfer cart to bring fully loaded basket or accessory rack next to ATS loading module.
   b. Apply brakes (located on rear wheels of transfer cart) and ensure both transfer cart wheels are locked and swiveling is not possible.

Questions? Contact FDA/CDRH/OCE/DID at CDRH-FOISTATUS@fda.hhs.gov or 301-796-8118

Records processed under FOIA Request 2011-7650; Released 1/25/12

c. Slightly push loaded basket or accessory rack onto ATS loading module.

d. Ensure basket reaches proximity sensor.

IMPORTANT: *Ensure all* ***START/STOP*** *pushbuttons are lifted and lighted and* ***AUTO/OFF*** *Selector switch is in AUTO position. All powered gates should be raised.*

NOTE: Shower can be used to rinse off gross soil from load and to wash load module pan.

7. Basket or accessory rack is automatically indexed into wash chamber.
8. As basket or accessory rack is indexed into wash chamber, bar code reader detects cycle to be processed from bar code tag.
   - If bar code is read without error, wash chamber door closes and cycle begins.
   - If bar code reader cannot detect bar code tag, see *SECTION 4.6, MANUAL ENTRY OF BAR CODE IDENTIFICATION NUMBER.*
9. Cycle proceeds through selected cycle treatments.

4.6 Manual Entry of Bar Code Identification Number

If an error occurs during the reading of the bar code tag, the chamber door remains open.

If the bar code reader is unable to detect the bar code tag on a basket, it may be for one of the following reasons:

- The bar code tag may be positioned on the opposite side of the bar code reader. Reposition basket
- The bar code tag may be damaged or otherwise illegible to the bar code reader.
- The basket may not have a bar code tag. Install bar code tag in bar code tag holder (see Figure 4-13).

1. Place basket on loading conveyor/module.
2. Door opens. Basket is loaded into wash chamber. Bar code is not detected, alarm sounds and display shows:

NO BAR CODE DETECTED
PRESS START TO RESUME...

3. Press **CYCLE/START** touch pad. Alarm stops and door automatically closes. Displays shows:

PRESS START TO
SELECT CYCLE

4. Press **CYCLE/START** touch pad. Cycle menu appears:

INSTR.	**UTENSILS**
GLASSWARE	**PLASTIC**

Questions? Contact FDA/CDRH/OCE/DID at CDRH-FOISTATUS@fda.hhs.gov or 301-796-8118

Records processed under FOIA Request 2011-7650; Released 1/25/12

5. Press **CYCLE MENU** touch pad to access other cycle menus; then press **SELECT CYCLE** touch pad to select desired cycle.

6. Press **CYCLE/START** touch pad twice to initiate cycle.

4.7 Typical Cycle Operation

WARNING–PERSONAL INJURY AND/OR EQUIPMENT DAMAGE HAZARD:

- **Always load empty baskets on appropriate loading cart or surface.**
- **Do not place empty baskets directly on conveyor modules. if you do, proximity sensor will detect basket and indexing will automatically start.**

WARNING–PERSONAL INJURY HAZARD: When baskets are present on conveyor modules, keep fingers and hands away from wash chamber doors and moving baskets.

WARNING – BURN HAZARD:

- **Except for an emergency, do not open door when cycle is in progress. In an emergency, first stop cycle by pressing the STOP/RESET touch pad and wait for water flow to stop. Wear appropriate Personal Protective Equipment (PPE) whenever reaching into the chamber.**
- **After pressing the STOP/RESET touch pad, wait until water flow stops; then, open door slowly. Hot water/steam may be sprayed through door opening if door is opened too soon.**

IMPORTANT: *Washer operation can be halted at any time by pressing **STOP/RESET** touch pad. Pressing **STOP/RESET** touch pad once halts cycle operation and printout message indicates "STOP PRESSED!". Pressing **STOP/RESET** touch pad twice aborts the cycle and printout message is "CYCLE ABORTED!". To resume cycle operation, press **CYCLE/START** touch pad. In an emergency, if it is necessary to open the door after pressing **STOP/RESET** touch pad, wait for water flow to stop and then open door. To resume cycle, close door and press **CYCLE/START** touch pad.*

NOTE: If unit is equipped with conveyor modules, note the following:

*1) If a cycle is aborted, the conveyors stop. To restart conveyor operation, a normal cycle must be started manually (press **CYCLE/START** touch pad twice). Conveyors resume normal operation once the cycle is started.*

2) To stop automatic loading and unloading of basket(s), depressurize conveyor line by pressing Pressure-Release pushbutton on SCS-FO or SCS-2W-FO conveyor.

The cycle description which follows applies to the preprogrammed INSTRUMENTS cycle, which is the most extensive combination of preprogrammed treatments.

1. Ensure **power** switch (located behind upper service access panel) is in **ON** position.
2. Position **POWER-OFF/STANDBY** switch to **POWER** position. Display shows:

RELIANCE
MODEL 444

then:

INSTR	**UTENSILS**
GLASSWARE	**PLASTIC**

and printer prints:

CONTROL ON HH:MM:SS (Current Time)
YY/MM/DD (Current Date)

RELIANCE
MODEL 444
S/N 36XXXXXXXX (Unit Serial Number)

Questions? Contact FDA/CDRH/OCE/DID at CDRH-FOISTATUS@fda.hhs.gov or 301-796-8118

Records processed under FOIA Request 2011-7650; Released 1/25/12

CAUTION – POSSIBLE EQUIPMENT DAMAGE:

- **Always position each manifold and/or bottom rotary spray over a manifold connector before operating unit. If manifolds and/or bottom rotary sprays are not positioned correctly, damage will result and unit will be unable to effectively wash load.**
- **Always select a cycle appropriate for the items being processed. Failure to do so may result in product damage.**
- **When choosing a detergent, select one with a low-chloride content. Detergents with a high-chloride content must not be used, as such detergents may harm stainless steel.**

- **Pure Water Rinse 1 (optional):** Load is rinsed with heated (150°F [66°C] not guaranteed) purified water for 10 seconds, (factory-set, non recirculated) or sprayed over load and recirculated for the selected time interval (0 to 15 minutes). Lubricant (option) is added as solution is sprayed over the load.
- **Drying (optional):** Load is dried at 240°F (116°C) set point (factory-setting [158°F (70°C) for anesthesia/respiratory goods; 200°F (93°C) for plastic goods]) for seven minutes (factory-setting [60 minutes for anesthesia/respiratory goods]).

5. When cycle is complete, buzzer sounds and display shows:

PLEASE OPEN DOOR

AND REMOVE THE LOAD

NOTE: In units equipped with conveyor modules, door opens automatically and basket is unloaded.

6. Open door. Leave door open to allow load to cool before removing manifolds and/or baskets. Display returns to Main Cycle menu.

NOTE: When cycle is complete, door must be opened and then closed before another cycle can be started.

4.8 Visual Inspection

IMPORTANT: *Good Hospital Practice dictates all instruments be inspected for visible debris after processing in the Reliance 444 Single-Chamber Washer/Disinfector. Any instrument with visible debris must be reprocessed until clean and free of visible debris prior to terminal processing. Failure to reprocess until all visible debris has been removed may impede the terminal processing.*

1. Once items have cooled, inspect each item to detect residues or soil.
2. Any item not properly cleaned must be reprocessed.

4.9 Responding to an Alarm

Alarm buzzer can be silenced by pressing **ALARM REPLY** touch pad. After silencing the buzzer, printer prints . . .

ALARM ACKNOWLEDGED

AT HH:MM:SS

. . . to record time at which operator acknowledged the alarm signal. Refer to *SECTION 7, TROUBLESHOOTING*, for a list of alarm conditions and operator actions.

Questions? Contact FDA/CDRH/OCE/DID at CDRH-FOISTATUS@fda.hhs.gov or 301-796-8118

Records processed under FOIA Request 2011-7650; Released 1/25/12

4.10 Stop Cycle Operation

*NOTE: Washer operation can be halted at any time by pressing **STOP/RESET** touch pad. Pressing **STOP/RESET** touch pad twice aborts cycle, display shows "STOP PRESSED!" and printout message is "CYCLE ABORTED!". To resume cycle, press **CYCLE/ START** touch pad. In an emergency, if it is necessary to open the door after pressing **STOP/RESET** touch pad, wait for water flow to stop and then open door. To resume cycle, close door and press **CYCLE/ START** touch pad.*

1. Press **STOP/RESET** touch pad to immediately halt operation of cycle in progress. Display screen indicates **STOP/RESET** touch pad was pressed:

STOP WAS PRESSED
PRESS START TO RESUME

alternating with:

INSTR.	**HOT**
ENZYME	**WATER**

and printer records:

STOP PRESSED HH:MM:SS

2. Press **CYCLE/START** touch pad to resume cycle operation. Treatment resumes at point where it was interrupted.

4.11 Abort Cycle Operation

1. Press **STOP/RESET** touch pad to halt cycle in progress. Display shows:

STOP WAS PRESSED
PRESS START TO RESUME

alternating with:

INSTR.	**HOT**
DRAINING	**TIME: XX:XX**

2. Press **STOP/RESET** touch pad a second time to abort cycle. Display screen indicates cycle was aborted:

CYCLE ABORTED

and printer records:

- -

CYCLE ABORTED HH:MM:SS

- -

Control automatically aborts cycle operation and returns to selected Cycle menu.

Questions? Contact FDA/CDRH/OCE/DID at CDRH-FOISTATUS@fda.hhs.gov or 301-796-8118

Records processed under FOIA Request 2011-7650; Released 1/25/12

4.12 Shutdown

NOTE: Control should be placed in Standby mode after last cycle of the day and when washer is not in use for an extended period of time.

At the end of a work session, the washer/disinfector should be shut down and cleaned thoroughly. Refer to *SECTION 6, ROUTINE MAINTENANCE,* for complete cleaning instructions and scheduled minor maintenance.

1. Position **POWER-OFF/STANDBY** switch to **OFF/STANDBY** position. Display shows:

STANDBY CYCLE WILL
START IN 01:00

2. There is a one-minute countdown before STANDBY cycle starts. This delay allows operator to cancel STANDBY cycle and return to Ready mode by positioning **POWER-OFF/STANDBY** switch to **POWER**.

   After a one-minute delay, if **POWER-OFF/STANDBY** switch is left in **OFF/STANDBY** position, sump and pure water tank drain during two minutes. Drain discharge cooldown system cools effluent before water is sent to drain.

3. Once STANDBY cycle is completed, control goes to Standby mode. Interior chamber light remains on. Display shows:

00:00:00P

4. To perform maintenance on washer, position **power** switch (located under load side control, refer to Figure 3-2) to **OFF**.
5. Position building electrical disconnect switch (circuit breaker) to **OFF** position and close building supply lines.
6. Clean unit as described in *SECTION 6, ROUTINE MAINTENANCE.*
7. Ensure building electrical disconnect switch and **power** switch are positioned to **ON** after completion of cleaning and minor maintenance procedures.

   *NOTE: Leaving **power** switch to OFF position overnight shortens life span of battery backed-up control memory.*

   ***IMPORTANT:** Unit must be decontaminated once a week, as explained in SECTION 6, ROUTINE MAINTENANCE.*

Questions? Contact FDA/CDRH/OCE/DID at CDRH-FOISTATUS@fda.hhs.gov or 301-796-8118

Records processed under FOIA Request 2011-7650; Released 1/25/12

4.13 Power Door Operation

WARNING–PERSONAL INJURY HAZARD:

- **Risk of pinch point between door and upper panel. Do not push on top portion of doors; do not push on door when door is rising; do not push on door when door is jammed.**
- **In case of power loss, automatic door(s) lowers slowly by gravity. Keep fingers and hands out of door area to avoid personal injury.**
- **The chamber door is heavy. Lifting door manually may require two people.**

Door movement is controlled by **DOOR OPEN** and **DOOR CLOSE** touch pads located on control panel.

DOOR OPEN touch pad: Press to automatically lift door to open position.

DOOR CLOSE touch pad: Press to automatically lower door to closed position.

On double-door units, a door-interlock safety feature allows only one door to be opened at a time to avoid cross-contamination.

On double-door units, load door can be operated only from load side control panel, and unload door can be operated only from unload side control panel.

Unload side door can be opened **ONLY AFTER COMPLETION OF A CYCLE**. Load side door can be opened at any time with operator following appropriate precautions.

4.14 Door Obstruction

WARNING–PERSONAL INJURY AND/OR EQUIPMENT DAMAGE HAZARD: If an obstruction is present in the wash chamber door, door safety sensor will detect obstruction and door will automatically stop closing. Wait until door is fully open and water flow has stopped before removing obstruction.

WARNING–PERSONAL INJURY HAZARD:

- **Risk of pinch point between door and upper panel. Do not push on top portion of doors; do not push on door when door is rising; do not push on door when door is jammed.**
- **If an obstruction is present in the wash chamber door and door is unable to raise, DO NOT attempt to remove obstruction from under the door. Door cables may have slacken and door may close at high speed when obstruction is removed. Call a qualified service technician to safely remove obstruction.**

If an obstruction is present at the bottom of the wash chamber door, do not attempt to remove the object. A door safety sensor detects obstruction. Door automatically stops from closing and opens completely. An alarm sounds and display shows:

ALARM :

DOOR OBSTRUCTION

1. Press **ALARM REPLY** touch pad to silence buzzer.
2. Once door is completely open, remove obstruction at bottom of wash chamber door. Display shows:

CYCLE STOPPED

PRESS START TO RESUME

3. Press **CYCLE/START** touch pad. Door closes and cycle operation resumes.

WARNING – BURN HAZARD: Before removing an obstruction from the wash chamber door, always wear appropriate Personal Protective Equipment (PPE) and wait until water flow stops. Hot water/steam may be sprayed through door opening.

Questions? Contact FDA/CDRH/OCE/DID at CDRH-FOISTATUS@fda.hhs.gov or 301-796-8118

Records processed under FOIA Request 2011-7650; Released 1/25/12

4.15 Power Door Operation During a Power Failure

WARNING – ELECTRIC SHOCK AND/OR BURN HAZARD: Fasteners and star washers are used to ensure protective bonding continuity. Always reinstall any star washer which may have been removed during installation or servicing.

WARNING–PERSONAL INJURY HAZARD:

- **In case of power loss, automatic door(s) lowers slowly by gravity. Keep fingers and hands out of door area to avoid personal injury.**
- **The chamber door is heavy. Lifting door manually may require two people.**
- **Risk of pinch point between door and upper panel. Do not push on top portion of doors; do not push on door when door is rising; do not push on door when door is jammed.**

To raise (open) door, proceed as follows:

1. Untighten screws from bottom right and left hand corners of upper service access panel(s) (see Figure 4-15).
2. Pull and lift upper service access panel(s) to remove.
3. Verify door cables are seated in pulley grooves (six pulleys) (see Figure 4-14).
4. Secure door in open position:

   NOTE: The following steps may require two people.

   a. Remove quick release pin from inside chamber.

   b. Lift door using handle located at top of door (see Figure 4-15).

   c. Insert quick release pin into safety door stop (see Figure 4-16).

   NOTE: Flip bottom corner silicone gasket towards the front before lowering door onto safety door stop.

   d. Slowly lower door onto safety door stop.

To lower (close) door, proceed as follows:

NOTE: When lowering door, do not pull cable towards front of the unit, as this may cause cable to disengage from pulley grooves.

1. Remove quick release pin from safety door stop (see Figure 4-16).
2. Slowly lower door.
3. Ensure cable is properly engaged in pulleys.
4. Store quick release pin into original position (see Figure 4-16).
5. Reinstall upper service access panel and secure with previously removed screws.

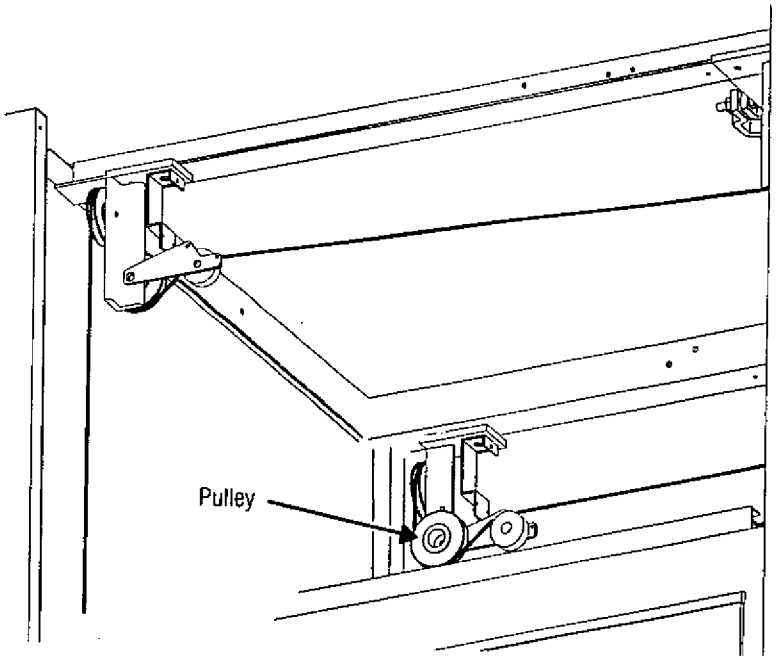

Figure 4-14 Door Cable Pulleys

Questions? Contact FDA/CDRH/OCE/DID at CDRH-FOISTATUS@fda.hhs.gov or 301-796-8118
FOI - Page 951 of 1276

Records processed under FOIA Request 2011-7650; Released 1/25/12

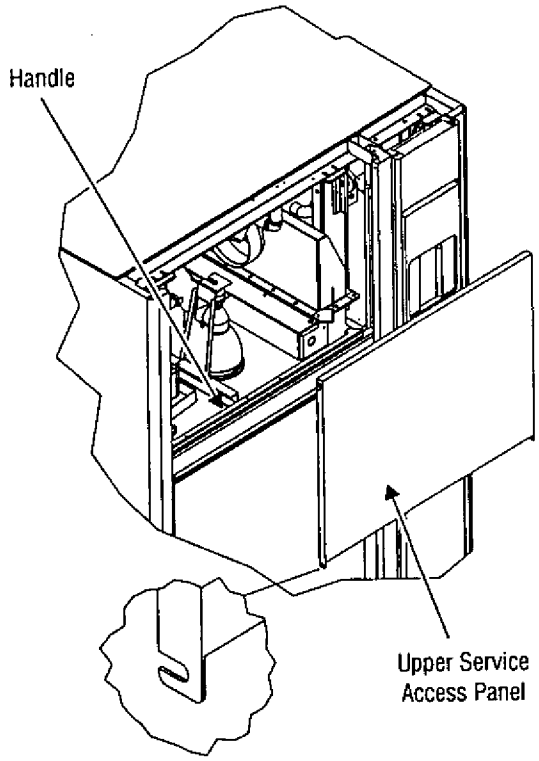

Figure 4-15. Power Door Operation During a Power Failure

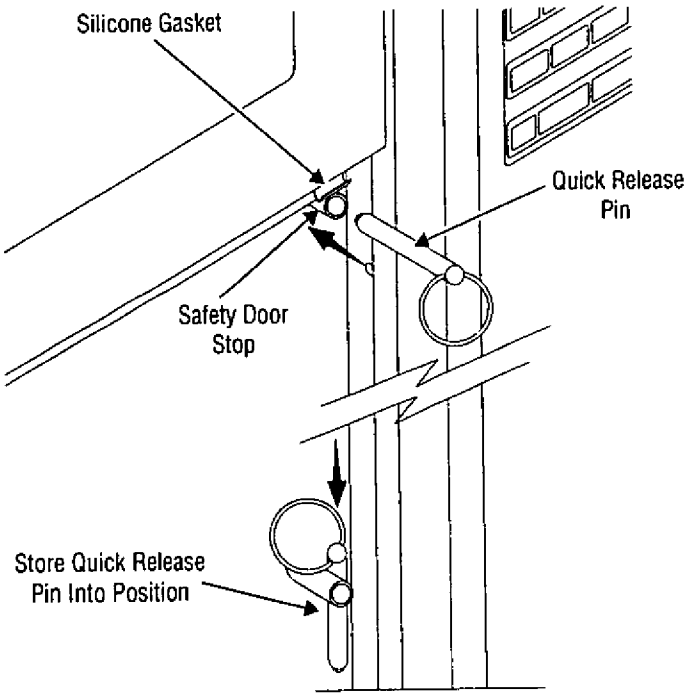

Figure 4-16. Safety Door Stop

Questions? Contact FDA/CDRH/OCE/DID at CDRH-FOISTATUS@fda.hhs.gov or 301-796-8118

Records processed under FOIA Request 2011-7650; Released 1/25/12

Healthcare
Capital Equipment

Questions? Contact FDA/CDRH/OCE/DID at CDRH-FOISTATUS@fda.hhs.gov or 301-796-8118

Records processed under FOIA Request 2011-7650; Released 1/25/12

CYCLE AND CONTROL VALUE PROGRAMMING 5

IMPORTANT: *A listing of the Safety Precautions to be observed when operating and servicing this washer/disinfector can be found in SECTION 1 of this manual. Do not operate the equipment until you have become familiar with this information.*

5.1 General

Reliance® 444 Single-Chamber Washer/Disinfector is programmed with the following factory-set operating cycles:

- **INSTRUMENTS (00)** – For processing surgical instruments.
- **UTENSILS (01)** – For processing bedpans, trays, basins and bowls.
- **GLASSWARE (03)** – For processing beakers, bottles and jars.
- **PLASTIC GOODS (04)** – For processing plasticware.
- **ANESTHESIA/RESPIRATORY GOODS (05)** – For processing anesthesia tubes, bags and masks.
- **GENTLE CYCLE (06)** – For processing delicate surgical instruments.

  IMPORTANT: *The RIGID MIS cycle (07) is available only if the unit is equipped with the Enzyme treatment option.*
- **RIGID MIS (07)** – For processing rigid minimally invasive surgery (MIS) instruments.

  NOTE: Each factory pre-set cycle has been tested to ensure effective washing.

In addition, a **DECONTAMINATION** cycle is programmed at the factory to help with routine maintenance. Refer to *SECTION 6, ROUTINE MAINTENANCE*, for information.

Cycles include various sequences of treatments:

*NOTE: See **Table 5-1**, Cycle Description Chart, for treatment specifications.*

- Pre-Wash
- Enzyme (spray, soak, two rinses) (option)
- Wash
- Rinse
- Thermal Rinse
- Pure Water Rinse (option)
- Drying (option)

Each treatment has time and/or temperature values, some of which you can modify within a range. To ensure safe and effective operation, some pre-set values cannot be modified.

Questions? Contact FDA/CDRH/OCE/DID at CDRH-FOISTATUS@fda.hhs.gov or 301-796-8118

Records processed under FOIA Request 2011-7650; Released 1/25/12

Table 5-1. Reliance 444 Single-Chamber Washer/Disinfector – Cycle Description Chart

	SPECIAL TREATMENT (OPTION) PRE-WASH (1 TO 4)		PRE-WASH (1 TO 4)		ENZYME TREATMENT (OPTION) ENZYME WASH	SOAKING		RINSE 1	RINSE 2
PHASE:	RECIRCULATED		RECIRCULATED		RECIRCULATED			RECIRCULATED	RECIRCULATED
CIRCULATION (1) TIME:	DEFAULT 15:00	SELECT 00:15 TO 15:00	DEFAULT 02:00	SELECT 00:15 TO 15:00	00:20	DEFAULT 01:00	SELECT 01:00 TO 05:00	00:15	00:15
INJECTION PUMP SELECTION:	PUMP 3	PUMP 1, 2, 3, 4			ENZYME				
WATER TYPE OR AIR TEMP	HEATED 110.0°F(43°C)	CTW / HTW / HEATED 110.0°F (43°C)	CTW	CTW / HTW	HTW			CTW	CTW

		MOTOR SPEED DEFAULT	MOTOR SPEED SELECT						
00	INSTRUMENTS	HIGH			X	X	X	X	X
00	INSTRUMENTS WITH SPECIAL TREATMENT (12)	HIGH		X		IF SELECTED	IF SELECTED	IF SELECTED	IF SELECTED
01	UTENSILS	LOW			X				
03	GLASSWARE	LOW			X				
04	PLASTIC GOODS	LOW			X				
05	ANAESTHESIA RESPIRATORY GOODS	HIGH			X (4)				
06	GENTLE CYCLE	LOW			X (4)	X	X	X	X
07 (8)	RIGID MIS (8)	HIGH			10 MIN (4)	X	5 MIN.	X	X
07	CYCLE (8, 11)	LOW	LOW / HIGH		X	IF SELECTED	IF SELECTED	IF SELECTED	IF SELECTED
08	CYCLE (11)	LOW	LOW / HIGH		X	IF SELECTED	IF SELECTED	IF SELECTED	IF SELECTED
09	CYCLE (11)	LOW	LOW / HIGH		X	IF SELECTED	IF SELECTED	IF SELECTED	IF SELECTED
10	CYCLE (6)	LOW	LOW / HIGH	IF SELECTED	IF SELECTED	IF SELECTED	IF SELECTED	IF SELECTED	IF SELECTED
DECONTAMINATION		HIGH							

00 BAR CODE TAG NUMBER

X RECOMMENDED

NOT APPLICABLE

VALUES ADJUSTABLE BY THE OPERATOR IN AUTOMATIC MODE

CTW= COLD TAP WATER
HTW= HOT TAP WATER
HEATED= HEATED HOT TAP WATER
PW= HEATED PURIFIED WATER

RESERVICE IN 100 DAYS
RESERVICE IN 1000 CYCLES
CYCLE COUNT: 00000001 (TYPICAL)
SERIAL NUMBER: 3602902001 (TYPICAL)

DEFAULT VALUES NOT SHOWN ON CHART (ADJUSTABLE IN SERVICE MODE)

SUMP FILL ALARM TIME:	04:00 (01:00-15:00)	
SUMP GRAVITY DRAIN ALARM TIME:	01:15 (01:00-15:00)	
SUMP HEATING ALARM:		
-STEAM-HEATED UNIT:	10:00 (01:00-15:00)	
-ELECTRIC-HEATED UNIT:	30:00 (30:00-59:00)	
SUMP PUMPED DRAIN:	00:45	
VAPOR REMOVAL TIME:		
-STEAM-HEATED UNIT:	01:30 (01:00-15:00)	
-ELECTRIC-HEATED UN	02:45 (01:00-15:00)	

Note;

(1) TREATMENT TIME DOES NOT INCLUDE FILLING, HEATING AND DRAINING TIMES.
(2) IF DRYING TEMPERATURE > 210.0°F (99°C), MAXIMUM DRYING TIME IS 30 MINUTES.
(3) IF PURE WATER OPTION IS AVAILABLE, PURE WATER AND/OR LUBRICANT CAN BE SELECTED DURING THERMAL RINSE PHASE.
(4) TIME IS ADJUSTABLE FROM 02:00 TO 15:00 MINUTES.
(5) MANUALLY ADD DESCALER AT 2 oz/gal (16 ml) RATE (25 oz or 740 ml).
(6) CYCLE DEFAULT VALUES ARE SET FOR MAINTENANCE PURPOSES OR TROUBLESHOOTING BY STERIS TECHNICIAN, CYCLE MAY NOT MEET DISINFECTION STANDARDS.
(7) SELECT PUMP 1, 2 OR 5 AND ADD WASH 2.
(8) RIGID MIS CYCLE IS AVAILABLE ONLY IF UNIT IS EQUIPPED WITH ENZYME TREATMENT (OPTION). IN THIS CASE , CUSTOM CYCLE 07 IS NOT AVAILABLE.
(9) SELECTION INDICATES TEMPERATURE AT WHICH WATER WILL BE MAINTAINED. TEMPERATURE ON ITEMS WILL BE APPROXIMATELY 4° F (2° C) LOWER.
(10) 44 SECONDS EQUAL 1/2 OZ/GAL. US (4 ml/l) APPROXIMATEL (SEE CONVERSION BOARD).
(11) CYCLE VALUES MAY BE MODIFIED AS PER CUSTOM NEEDS. ⚠ WARNING! MODIFICATIONS BELOW DEFAULT VALUES ARE NOT RECOMMENDED BY STERIS AND MAY NOT MEET CLEANING AND DISINFECTION STANDARDS.
(12) INSTRUMENTS WITH SPECIAL TREATMENT - IS AVAILABLE IF SELECTED IN SERVICE MODE ONLY. THE CYCLE IS INTENDED TO ACCOMODATE SPECIFIC APPLICATION NEEDS. CHECK WITH DETERGENT MANUFACTURER FOR CYCLE DETAILS.

Questions? Contact FDA/CDRH/OCE/DID at CDRH-FOISTATUS@fda.hhs.gov or 301-796-8118

Records processed under FOIA Request 2011-7650; Released 1/25/12

Table 5-1. Reliance 444 Single-Chamber Washer/Disinfector – Cycle Description Chart (Cont'd)

WASH 1		RINSE 1 (1 TO 4)		THERMAL RINSE		PURE WATER 1 (OPTION) (1 TO 4)		DRYING (OPTION)	
RECIRCULATED		RECIRCULATED		RECIRCULATED		RECIRCULATED			
DEFAULT	SELECT	DEFAULT	SELECT	DEFAULT	SELECT	DEFAULT	SELECT	DEFAULT	SELECT
02:00	02:00 TO 15:00	00:15	00:15 TO 15:00	01:00	01:00 TO 10:00	00:10	00:10 TO 15:00	07:00	00:00 (2) TO 60:00
PUMP 1	PUMP 1			NONE	NONE, LUB (3)	LUBRICANT	NONE, LUB		
HEATED 150.0°F (66°C)	HEATED 140.0°F (60°C) TO 180°F (82°C)	HTW	HEATED 110.0°F (43°C) TO 180°F (82°C)	HEATED (9) 180.0°F (82°C)	HTW, PW, HEATED 180.0°F (82°C) TO 203.0°F (95°C)	PW 180.0°F (82°C)	PW 60.0°F (16°C) TO 180.0°F (82°C)	AIR HEATED AT 240°F (116°C) SETPOINT, NOT MAINTAINED	150.0°F (66°C) TO 240.0°F (116°C)
X	X	X	X	X	X	X	X	X	X
X	X	X	X	X	X	X	X	X	X
X	X	X	X	X	X	X	X	X	X
X	X	X	X	X	X	X	IF SELECTED	AIR HEATED AT 200°F (93°C) SET POINT, NOT MAINTAINED	
X	X	X	X	X	X	X	IF SELECTED	60 min. AIR HEATED AT 158°F (70°C) SET POINT, NOT MAINTAINED	
X	X	X	X	X	X	X	X	X	
8 MIN.	X	X	X	X	X	X	X	15 min. AIR HEATED AT 240°F (116°C) SET POINT, NOT MAINTAINED	
10 MIN.	X	X	X	X	X	X	IF SELECTED	IF SELECTED	
X (1)	X	X	X	X	X	X	IF SELECTED	IF SELECTED	
X (1)	X	X	X	X	X	X	IF SELECTED	IF SELECTED	
X (1)	X	X	X	X	X	X	IF SELECTED	IF SELECTED	
IF SELECTED	IF SELECTED	IF SELECTED	IF SELECTED				IF SELECTED	30 MIN	
15 MIN (3)	3 PHASES, 1 MIN								

DEFAULT VALUES NOT SHOWN ON CHART (ADJUSTABLE IN SERVICE MODE) - CHEMICAL CONVERSION BOARD

INJECTION RATE (10)

		SECONDS	SEC./MIN.
PUMP 1 NAME:	PUMP 1 (9 CHARACTERS)	00:44	00:20/03:00
PUMP 2 NAME: (OPTIONAL)	PUMP 2 (9 CHARACTERS)	00:44	00:20/03:00
PUMP 3 NAME: (OPTIONAL)	PUMP 3 (9 CHARACTERS)	00:44	00:20/03:00
PUMP 4 NAME: (OPTIONAL)	ENZYME (9 CHARACTERS)	00:88	00:20/03:00
PUMP 5 NAME: (OPTIONAL)	LUBRICANT (9 CHARACTERS)	00:44	00:20/03:00

MIN.:SEC.	OZ/GALLON	ML/L
00:11	1/8	1.0
00:22	1/4	2.0
00:44	1/2	3.9
01:06	3/4	5.9
01:28	1	7.8
01:50	1-1/4	9.8
02:12	1-1/2	11.7
02:34	1-3/4	13.7
02:56	2	15.6

Questions? Contact FDA/CDRH/OCE/DID at CDRH-FOISTATUS@fda.hhs.gov or 301-796-8118

Records processed under FOIA Request 2011-7650; Released 1/25/12

5.2 Change Values Mode

Three paths are available to customize cycles to suit specific needs. It is possible to modify factory pre-set cycles, add or remove cycle treatments or create a personalized cycle configuration (see Figure 5-1).

The Change Values mode allows authorized operators to modify or add treatment values in (or remove from) existing cycles, create new cycles or modify miscellaneous operating values. Change Values mode consists of four functions: MODIFY, ADD/CREATE, REMOVE and EXIT (see Figure 5-2).

NOTE: If access code feature is enabled, operator must enter access code before entering Change Values Mode (See Figure 5-7)

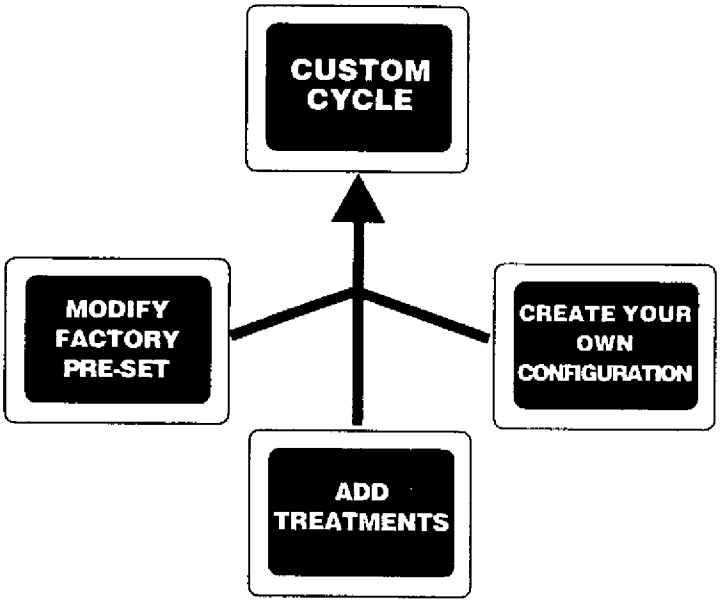

Figure 5-1. Change Values Mode Functions

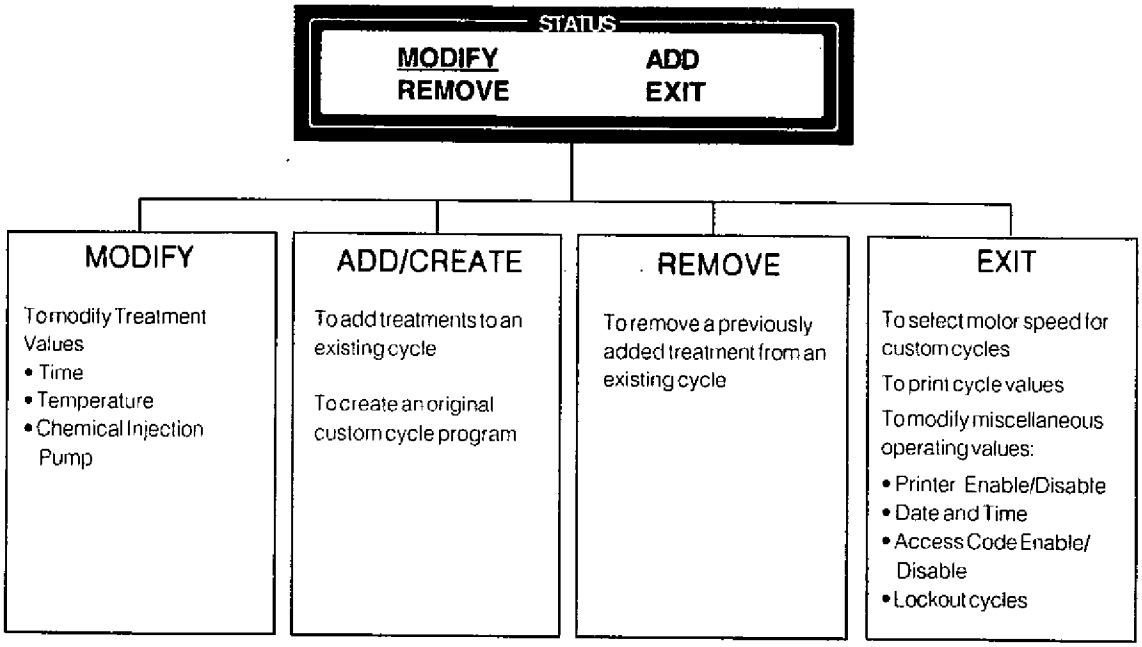

Figure 5-2. Change Values Mode – Program Tree

Questions? Contact FDA/CDRH/OCE/DID at CDRH-FOISTATUS@fda.hhs.gov or 301-796-8118

Records processed under FOIA Request 2011-7650; Released 1/25/12

5.3 Modifying Factory-Set Cycles

See Figure 5-3.

To modify factory-set cycles, proceed as follows:

1. Press **CYCLE MENU** touch pad until desired cycle name appears on Cycle Status screen. Four cycles are shown on each menu screen, e.g.,

INSTR.	**UTENSILS**
GLASSWARE	**PLASTIC**

__ indicates flashing position.

2. Cursor (__) marks selected cycle. Press **SELECT CYCLE** touch pad if another cycle within that menu is desired.

3. Press **CHANGE VALUES** touch pad to confirm cycle selection. Display shows:

MODIFY	**ADD**
REMOVE	**EXIT**

__ indicates flashing position.

4. Press **CHANGE VALUES** touch pad to confirm MODIFY selection.

5. Press **VALUE arrows** (up or down) to scroll through treatment names. When treatment name to be modified appears, press **CHANGE VALUES** touch pad to select that treatment.

   *NOTE: Not all treatments can be modified. See **Table 5-1**, Cycle Description Chart, for more detailed information.*

6. If treatment values can be modified, press **CURSOR arrows** (left or right) and **VALUE arrows** (up or down) to select desired values. Press **CHANGE VALUES** touch pad to confirm selection and continue with next treatment.

7. **TO EXIT:** When all treatments and their values have been selected, there are two ways to save them and exit:

   - To change date or time, enable printer, print out all programmed cycle values, select recirculating pump motor speed or establish an access code . . .

Press **CHANGE VALUES** touch pad

Select **EXIT**

Press **CHANGE VALUES** touch pad again

__Designates cursor position when display appears on control.

. . . and the control advances through an exit routine that accesses those functions. For more information, see *SECTION 5.8, CHANGING MISCELLANEOUS VALUES.*

. . . or . . .

Questions? Contact FDA/CDRH/OCE/DID at CDRH-FOISTATUS@fda.hhs.gov or 301-796-8118

646

Records processed under FOIA Request 2011-7650; Released 1/25/12

- You can leave Change Values routine at any time by pressing **SAVE VALUES** touch pad. This stores changes made to that point, and control returns you to main Cycle menu.

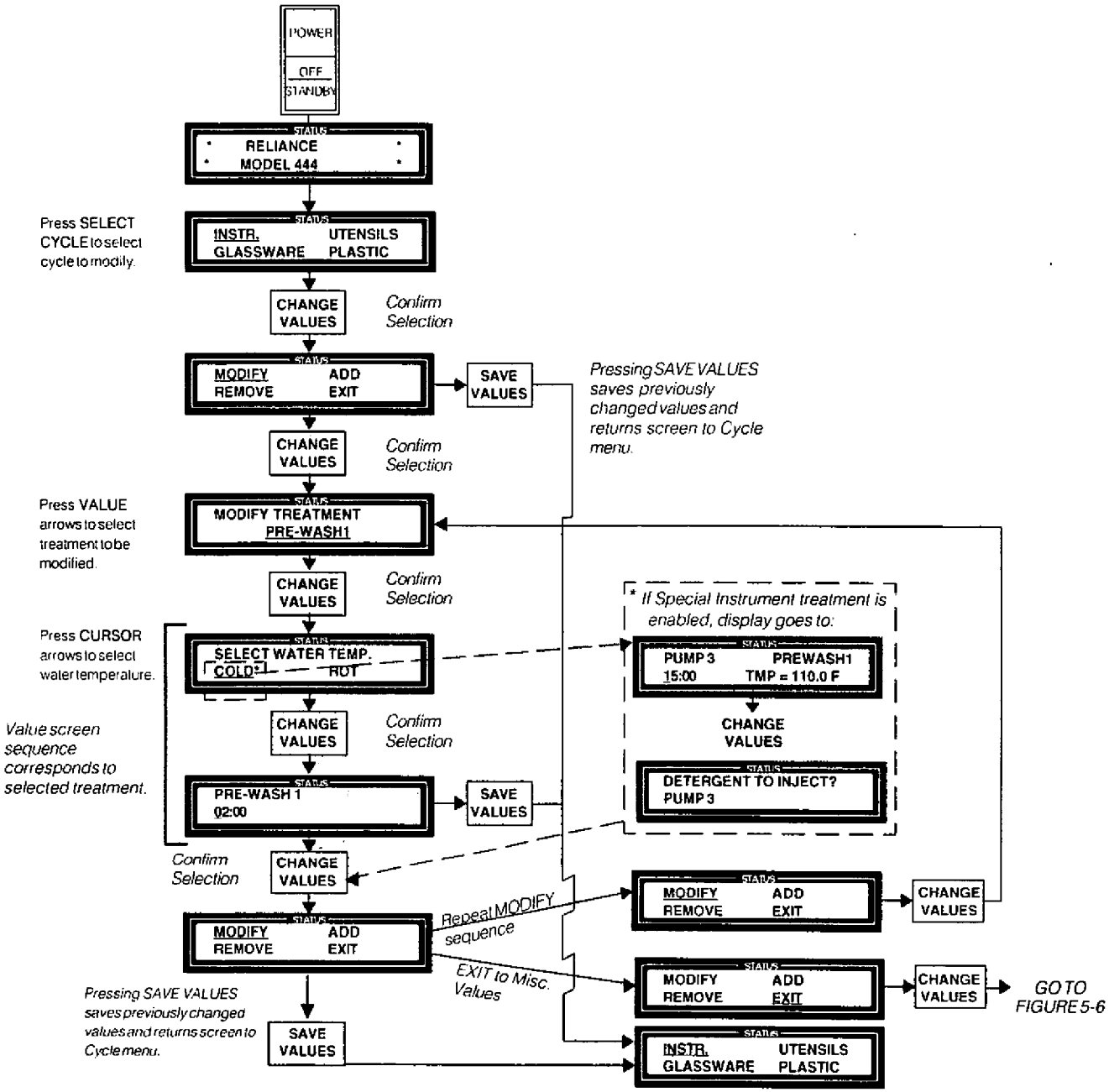

__ *Designates cursor position when display appears on control.*

Figure 5-3. Change Values Mode – Modifying Factory-Set Cycles

Questions? Contact FDA/CDRH/OCE/DID at CDRH-FOISTATUS@fda.hhs.gov or 301-796-8118

Records processed under FOIA Request 2011-7650; Released 1/25/12

5.4 Adding Treatments to Cycles

See Figure 5-4.

To add treatments to a cycle, proceed as follows:

1. Press **CYCLE MENU** touch pad until desired cycle name appears on Cycle Status screen, e.g.,

INSTR.	**UTENSILS**
GLASSWARE	**PLASTIC**

__ indicates flashing position.

2. Cursor (__) marks selected cycle. Press **SELECT CYCLE** touch pad if another cycle within that menu is desired.

3. Press **CHANGE VALUES** touch pad to confirm cycle selection. Display shows:

MODIFY	**ADD**
REMOVE	**EXIT**

__ indicates flashing position.

4. Press **CURSOR arrow** (right) touch pad to highlight ADD, then press **CHANGE VALUES** touch pad to confirm ADD selection and continue sequence. Display shows:

CREATE TREAT. AFTER
(TREATMENT NAME)

__ indicates flashing position.

5. Press **VALUE arrows** (up or down) to scroll through treatment names. When treatment name to be added appears, press **CHANGE VALUES** touch pad to select. Display shows:

INITIALIZING
TREATMENT ...

. . . followed by choice of temperature, time and detergent.

IMPORTANT: *If Pre-Wash treatment has been deleted, it is not possible to add a treatment before Enzyme treatment. Control does not allow restoring Pre-Wash treatment into cycle. In that case, erase whole cycle and create a new cycle starting with a Pre-Wash treatment so you can add desired treatments after Pre-Wash treatment.*

Questions? Contact FDA/CDRH/OCE/DID at CDRH-FOISTATUS@fda.hhs.gov or 301-796-8118

Records processed under FOIA Request 2011-7650; Released 1/25/12

*NOTE: **TREATMENT LIMITS** – As many as 15 treatments (11 on units without enzyme, pure water or drying options) can be included in a cycle. If you try to enter a 16th treatment (12th on units without enzyme, pure water or drying options), the display reads "No Room in This Cycle". Some treatments are limited as to the number of times they can be used in a cycle. If you try to enter more, the display reads "No Room in This Treatment Type". Treatment limits are:*

Treatment Name	Max Per Cycle
• Pre-Wash	4
• Enzyme	1
• Wash	1*
• Rinse	4
• Thermal Rinse	1
• Pure Water	4
• Drying	1

** Two with optional detergent pump in cycles 7, 8, 9 or 10.*

6. If treatment has values that can be modified (see **Table 5-1** and Figure 5-3 for time and temperature ranges), press **CURSOR arrows** (left or right) and **VALUE arrows** (up or down) to select desired values. Press **CHANGE VALUES** touch pad to confirm selection and continue with next treatment.

7. **TO EXIT:** When all treatments and their values have been selected, there are two ways to save them and exit:

   - If you want to change date or time, enable printer, print out all programmed cycle values, select recirculating pump motor speed or establish an access code . . .

Press the **CHANGE VALUES** touch pad

Select **EXIT**

Press **CHANGE VALUES** touch pad again

__Designates cursor position when display appears on control.

. . . and control leads you through an exit routine that accesses those functions. For more information, see *SECTION 5.8, CHANGING MISCELLANEOUS VALUES.*

. . . or . . .

- You can leave Change Values routine at any time by pressing **SAVE VALUES** touch pad. This stores changes made to that point, and control returns you to main Cycle menu.

Questions? Contact FDA/CDRH/OCE/DID at CDRH-FOISTATUS@fda.hhs.gov or 301-796-8108
FOI - Page 961 of 1276

Records processed under FOIA Request 2011-7650; Released 1/25/12

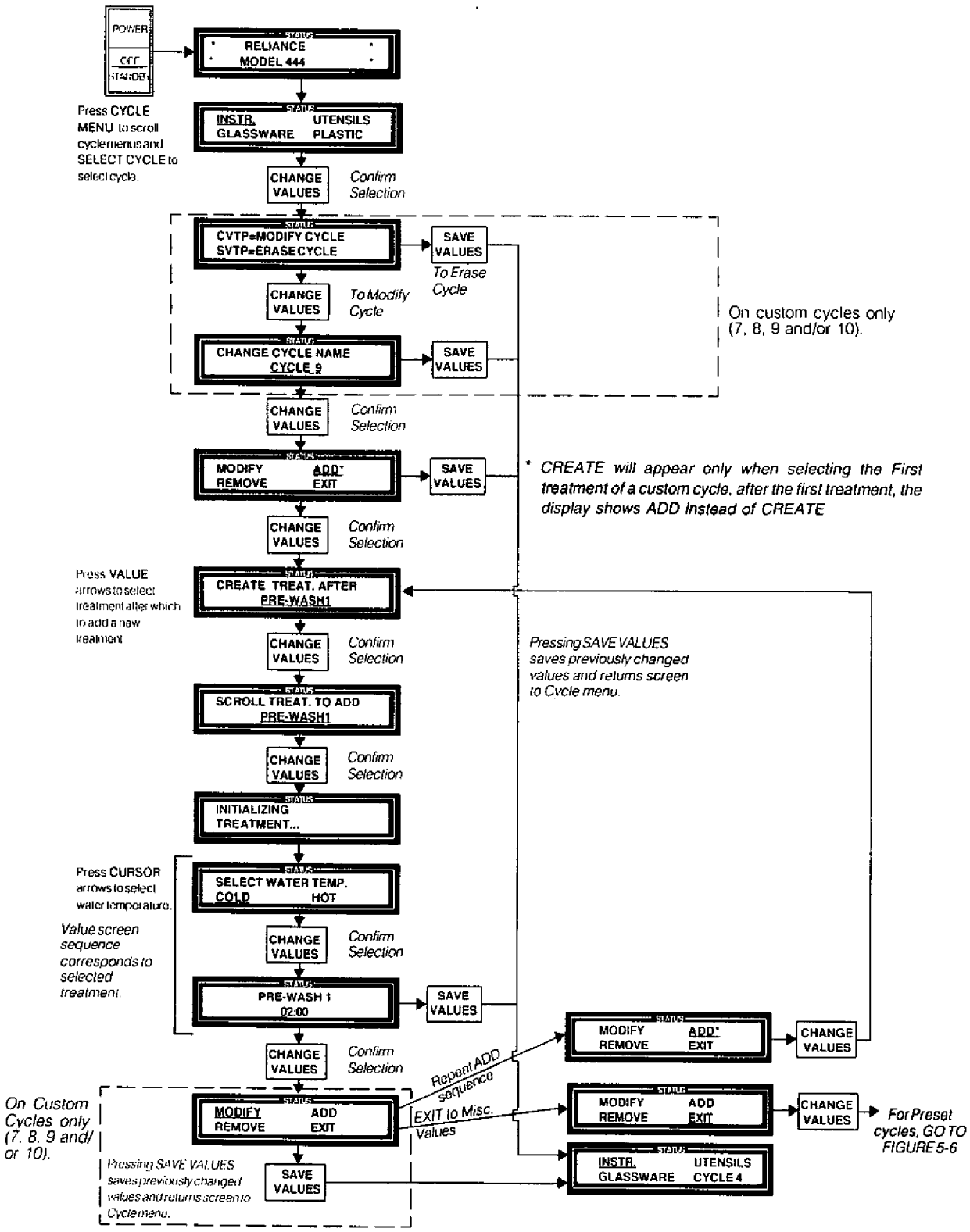

__ *Designates cursor position when display appears on control.*

Figure 5-4. Change Values Mode – Adding Treatments to Cycles

Questions? Contact FDA/CDRH/OCE/DID at CDRH-FOISTATUS@fda.hhs.gov or 301-796-8118

Records processed under FOIA Request 2011-7650; Released 1/25/12

5.5 Removing Treatments From Cycles

You can later delete treatments you have added, but **you cannot remove core treatments which are part of factory-set cycles.**

To delete treatments you have added, follow the same procedure described in *SECTION 5.4, ADDING TREATMENTS TO CYCLES*, except select REMOVE instead of ADD.

IMPORTANT: *If Pre-Wash treatment has been deleted, it is not possible to add a treatment before Enzyme treatment. Control does not allow restoring Pre-Wash treatment into cycle. In that case, erase whole cycle and create a new cycle starting with a Pre-Wash treatment so you can add desired treatments after Pre-Wash treatment.*

5.6 Creating Custom Cycles

See Figure 5-5.

Creating custom cycles allows you to store treatments and values tailored to make your processing more efficient, while retaining immediate access to factory pre-set cycles. You can create up to **four** custom cycles. To create a cycle, proceed as follows:

*NOTE: See **Table 5-1**, Cycle Description Chart, for treatments and values available.*

1. Press **CYCLE MENU** touch pad until available cycle appears.

2. Cursor (__) marks selected cycle. Press **SELECT CYCLE** touch pad if another cycle within that menu is desired.

3. Press **CHANGE VALUES** touch pad to confirm cycle selection. Display shows:

CHANGE CYCLE NAME
CYCLE NAME

__ indicates flashing position.

4. Enter new cycle name (9 characters or less), using **CURSOR arrows** (left or right) to move from one position to the next, and **VALUE arrows** (up or down) to scroll letters, numbers, underscore or a space (represented by a square). When display shows desired value, simply move cursor to next position.

5. Press **CHANGE VALUES** touch pad to confirm new name and continue sequence. Display shows:

MODIFY	**ADD**
REMOVE	**EXIT**

__ indicates flashing position.

6. Press **CHANGE VALUES** touch pad to confirm CREATE selection and continue sequence.

NOTE: CREATE appears only when selecting the FIRST treatment of a custom cycle. After the first treatment, the display shows ADD instead of CREATE.

Questions? Contact FDA/CDRH/OCE/DID at CDRH-FOISTATUS@fda.hhs.gov or 301-796-8118
FOI - Page 963 of 1276

Records processed under FOIA Request 2011-7650; Released 1/25/12

7. Press **VALUE arrows** (up or down) to scroll through treatment names. When name of first treatment in new cycle appears, press **CHANGE VALUES** touch pad to select that treatment.

   *NOTE: See **Table 5-1**, Cycle Description Chart, for treatments and values available.*

8. If treatment has values that can be modified, press **CURSOR arrows** (left or right) and **VALUE arrows** (up or down) to select desired values. Press **CHANGE VALUES** touch pad to confirm selection and ADD next treatments.

   *NOTE: **TREATMENT LIMITS** – As many as 15 treatments (11 on units without enzyme, pure water or drying options) can be included in a cycle. If you try to enter a 16th treatment (12th on units without enzyme, pure water or drying options), the display reads "No Room in This Cycle". Some treatments are limited as to the number of times they can be used in a cycle. If you try to enter more, the display reads "No Room in This Treatment Type". Treatment limits are:*

Treatment Name	Max Per Cycle
• Pre-Wash	4
• Enzyme	1
• Wash	1*
• Rinse	4
• Thermal Rinse	1
• Pure Water	4
• Drying	1

   ** Two with optional detergent pump in cycles 7, 8, 9 or 10.*

9. **TO EXIT:** Ending creating custom cycles process is same as modifying factory-set cycles. When all treatments and their values have been selected, there are two ways to save them and exit:

   - If you want to change date or time, enable printer, print out all programmed cycle values, select recirculating pump motor speed or establish an access code . . .

     Press **CHANGE VALUES** touch pad

     Select **EXIT**

     Press **CHANGE VALUES** touch pad again

     __*Designates cursor position when display appears on control.*

     . . . and control leads you through an exit routine that accesses those functions. For more information, see *SECTION 5.8, CHANGING MISCELLANEOUS VALUES.*

     . . . or . . .

   - You can leave the Change Values routine at any time by pressing **SAVE VALUES** touch pad. This stores changes made to that point, and control returns you to main Cycle menu.

Questions? Contact FDA/CDRH/OCE/DID at CDRH-FOISTATUS@fda.hhs.gov or 301-796-8118

652

Records processed under FOIA Request 2011-7650; Released 1/25/12

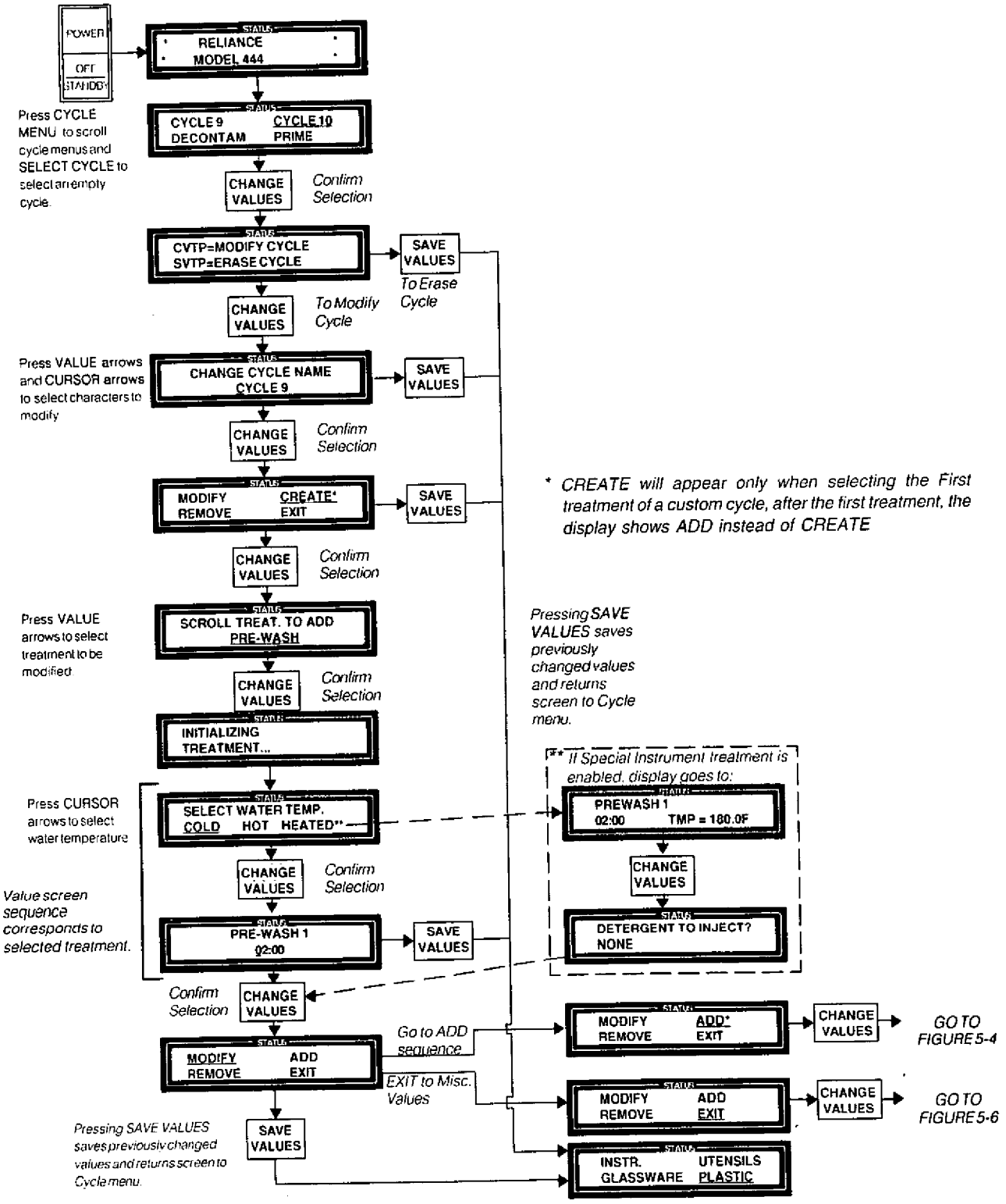

__ Designates cursor position when display appears on control.

Figure 5-5. Change Values Mode – Creating Custom Cycles

Questions? Contact FDA/CDRH/OCE/DID at CDRH-FOISTATUS@fda.hhs.gov or 301-796-8118

Records processed under FOIA Request 2011-7650; Released 1/25/12

5.7 Using Custom Cycles

IMPORTANT: After a custom cycle has been created and stored, each time you select that cycle, the display shows:

CVTP = MODIFY CYCLE
SVTP = ERASE CYCLE

- Press **CHANGE VALUES (CVTP)** touch pad to modify cycle values.

or:

- Press **SAVE VALUES (SVTP)** touch pad to reset selected cycle values to factory-set values. Cycle reverts to original default preprogrammed values.

- To continue operating the cycle as it had been created, press **CHANGE VALUES** touch pad and select EXIT.

5.8 Changing Miscellaneous Values

See Figure 5-6.

The Exit routine on the control allows you to change the recirculating pump motor speed, print cycle values that have been programmed and change miscellaneous values (turn the printer on/off, change date/time, establish access code). The procedure is similar to modifying, adding or creating cycles.

5.8.1 Selecting Recirculation Pump Motor Speed

*NOTE: Recirculating pump motor speed selection is possible only with custom cycles (cycles 7, 8, 9 and/or 10). See **Table 5-1**, Cycle Description Chart.*

1. Press **CHANGE VALUES** touch pad. Display shows:

MODIFY	**ADD**
REMOVE	**EXIT**

__ indicates flashing position.

2. Cursor (_) marks selected function. Press **CURSOR arrows** (left or right) to move cursor from MODIFY to EXIT.

3. Press **CHANGE VALUES** touch pad to confirm EXIT selection. Press again until following message is displayed:

SELECT MOTOR SPEED	
LOW	**HIGH**

__ indicates flashing position.

4. Press **CURSOR arrows** (left or right) to select motor speed. Press **CHANGE VALUES** touch pad to confirm motor speed setting and continue with other selections (or press **CHANGE VALUES** touch pad then **SAVE VALUES** touch pad to confirm setting and return to main Cycle menu).

Questions? Contact FDA/CDRH/OCE/DID at CDRH-FOISTATUS@fda.hhs.gov or 301-796-8118

Records processed under FOIA Request 2011-7650; Released 1/25/12

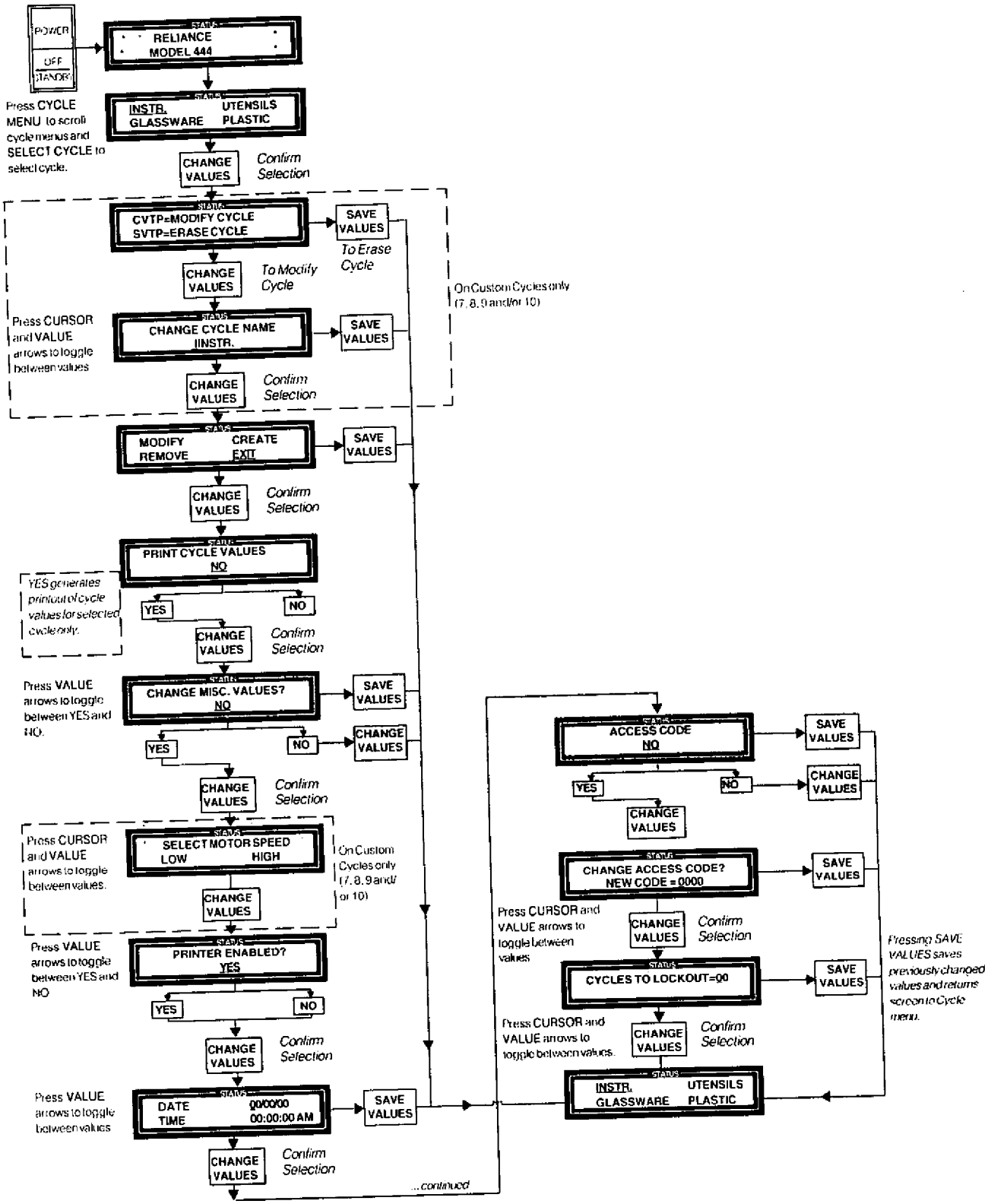

__ *Designates cursor position when display appears on control.*

Figure 5-6. Change Values Mode – Changing Miscellaneous Values

Questions? Contact FDA/CDRH/OCE/DID at CDRH-FOISTATUS@fda.hhs.gov or 301-796-8118

Records processed under FOIA Request 2011-7650; Released 1/25/12

5.8.2 Printing Cycle Values

1. Press **CHANGE VALUES** touch pad. Display shows:

MODIFY	**ADD**
REMOVE	**EXIT**

__ indicates flashing position.

2. Cursor (_) marks selected function. Press **CURSOR arrows** (left or right) to move cursor from MODIFY to EXIT.

3. Press **CHANGE VALUES** touch pad to confirm EXIT selection. Press again until following message is displayed:

PRINT CYCLE VALUES?
NO

__ indicates flashing position.

4. Press **VALUE arrows** (up or down) to change NO to YES. Press **CHANGE VALUES** touch pad to print values for cycle that has been changed or selected. Display automatically returns to main Cycle menu.

   *NOTE: The PRINT CYCLE VALUES feature is used to print values of a specified cycle. If you want a printout of **all** cycle values, use the PRINT VALUES switch inside the printer access door.*

5.8.3 Turning Printer ON/OFF

1. Press **CHANGE VALUES** touch pad. Display shows:

MODIFY	**ADD**
REMOVE	**EXIT**

__ indicates flashing position.

2. Cursor (_) marks selected function. Press **CURSOR arrows** (left or right) to move cursor from MODIFY to EXIT.

3. Press **CHANGE VALUES** touch pad to confirm EXIT selection. Press again until following message is displayed:

CHANGE MISC. VALUES?
NO

__ indicates flashing position.

4. Press **VALUE arrows** (up or down) to change NO to YES, then press **CHANGE VALUES** touch pad to confirm selection and continue sequence of displays. Display shows:

PRINTER ENABLED?
YES

__ indicates flashing position.

Questions? Contact FDA/CDRH/OCE/DID at CDRH-FOISTATUS@fda.hhs.gov or 301-796-8118

656

Records processed under FOIA Request 2011-7650; Released 1/25/12

5. Press **VALUE arrows** (up or down) to enable or disable printer. Press **CHANGE VALUES** touch pad to confirm setting and continue with selections (or press **CHANGE VALUES** touch pad then **SAVE VALUES** touch pad to save printer setting and return to main Cycle menu).

5.8.4 Setting Date and Time

1. Press **CHANGE VALUES** touch pad. Display shows:

MODIFY	**ADD**
REMOVE	**EXIT**

__ indicates flashing position.

2. Cursor (__) marks selected function. Press **CURSOR arrows** (left or right) to move cursor from MODIFY to EXIT.

3. Press **CHANGE VALUES** touch pad to confirm EXIT selection. Press again until following message is displayed:

CHANGE MISC. VALUES?
NO

__ indicates flashing position.

4. Press **VALUE arrows** (up or down) to change NO to YES, then press **CHANGE VALUES** touch pad until following message is displayed:

DATE	**YY/MM/DD (TYPICAL)**
TIME	**HH:MM:SS AM (TYPICAL)**

__ indicates flashing position.

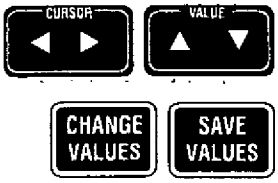

5. Press **CURSOR arrows** (left or right) to move from one digit on display to another, and **VALUE arrows** (up or down) to scroll through numbers to set date and time. When all settings are entered, press **CHANGE VALUES** touch pad to confirm setting and continue with Access Code sequence (or press **CHANGE VALUES** touch pad then **SAVE VALUES** touch pad to confirm setting and return to main Cycle menu).

Questions? Contact FDA/CDRH/OCE/DID at CDRH-FOISTATUS@fda.hhs.gov or 301-796-8118

657

Records processed under FOIA Request 2011-7650; Released 1/25/12

5.9 Access Code

See Figure 5-7.

The access code allows the supervisor to lock cycle parameters by preventing unauthorized personnel from entering that part of the program. If the supervisor sets the access code ON, the supervisor or an authorized operator must enter a four-digit code to change cycles or values.

When the access code is ON, if the operator tries to change a cycle that has been locked, the display shows:

ACCESS CODE KNOWN?
NO

__ *indicates flashing position.*

If the access code is known, press **VALUE arrows** (up or down) to change NO to YES, enter the access code and then press **CHANGE VALUES** touch pad. Display shows:

MODIFY	**ADD**
REMOVE	**EXIT**

__ *indicates flashing position.*

Proceed as described in *SECTION 5.3, MODIFYING FACTORY-SET CYCLES.*

If the operator does not enter the correct access code, the control returns to the main Cycle menu.

When the access code is OFF, there is no indication during normal operation the feature exists.

NOTE: The unit is shipped from factory with access code OFF. If the back-up battery on the control circuit board fails, access code selection is lost and the access code itself is lost.

ADVANTAGES OF ENABLING OR DISABLING ACCESS CODE: Enabling or disabling the access code can impact the efficiency of washing operations. For that reason, the supervisor should carefully consider which path to take. If the access code is ON, the supervisor can ensure operators use the washer/disinfector within predetermined parameters. If the access code is OFF, the supervisor can allow operators more flexibility in determining which cycles to use and how to use them. The deciding factor should be what works best for the facility's operation.

Questions? Contact FDA/CDRH/OCE/DID at CDRH-FOISTATUS@fda.hhs.gov or 301-796-8118
058
FOI - Page 970 of 1276

Records processed under FOIA Request 2011-7650; Released 1/25/12

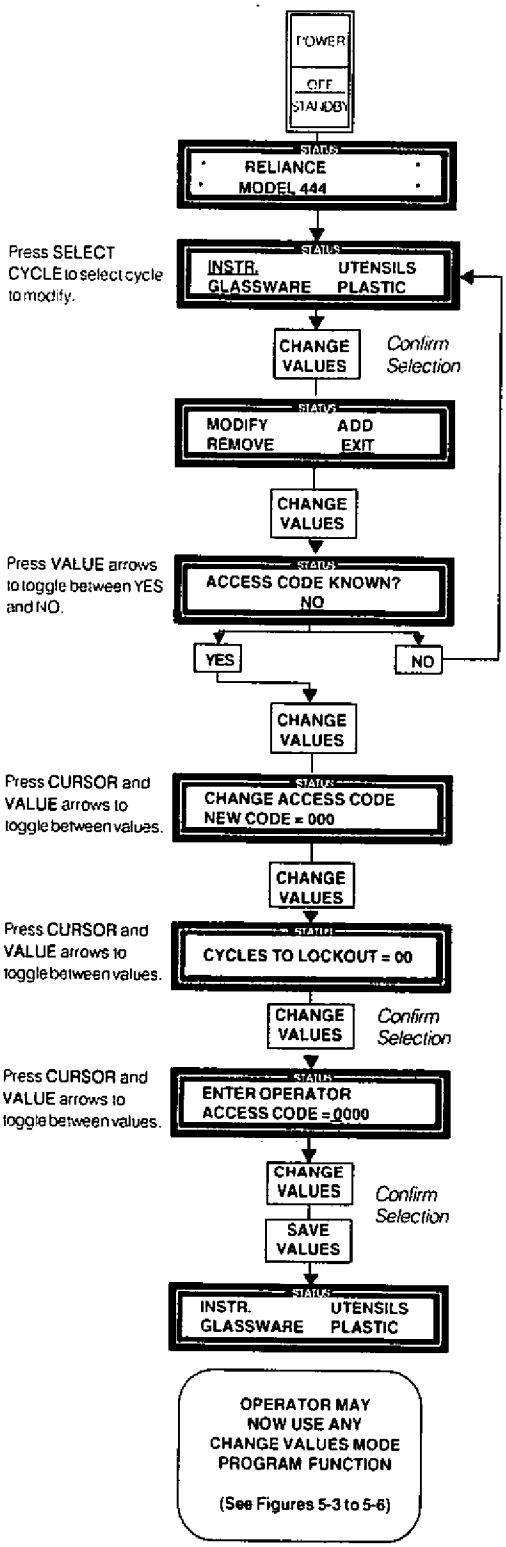

__ *Designates cursor position when display appears on control.*

Figure 5-7. Change Values Mode – Programming With Access Code Enabled

Questions? Contact FDA/CDRH/OCE/DID at CDRH-FOISTATUS@fda.hhs.gov or 301-796-8118

Records processed under FOIA Request 2011-7650; Released 1/25/12

5.9.1 Enabling/Changing Access Code

1. Press **CHANGE VALUES** touch pad. Display shows:

MODIFY	ADD
REMOVE	EXIT

__ indicates flashing position.

2. Press **CURSOR arrows** (left or right) to select EXIT. Press **CHANGE VALUES** touch pad until display shows:

CHANGE MISC. VALUES?
NO

__ indicates flashing position.

3. Press **VALUE arrows** (up or down) to change NO to YES. Press **CHANGE VALUES** touch pad until display shows:

ACCESS CODE
NO

__ indicates flashing position.

4. Press **VALUE arrows** (up or down) to change NO to YES to enable access code. Press **CHANGE VALUES** touch pad to confirm selection. Display shows:

CHANGE ACCESS CODE?
NEW CODE = XXXX

__ indicates flashing position.

5. Default access code is 0000. To customize your access code, input four new digits, using **CURSOR arrows** (left or right) to go from one digit to another, and **VALUE arrows** (up or down) to increase value of each digit. Press **CHANGE VALUES** touch pad to confirm new code. Display shows:

CYCLES TO LOCKOUT = 00

__ indicates flashing position.

NOTE: Lockout is sequential (INSTRUMENTS cycle first, then UTENSILS, GLASSWARE, PLASTIC, ANES/RESP, GENTLE), followed by custom cycles. For example, if one cycle is locked out, it is INSTRUMENTS; if two, INSTRUMENTS and UTENSILS, etc.

Questions? Contact FDA/CDRH/OCE/DID at CDRH-FOISTATUS@fda.hhs.gov or 301-796-8118

Records processed under FOIA Request 2011-7650; Released 1/25/12

6. Press **VALUE arrows** (up or down) to enter number of cycles to lock out, then press **CHANGE VALUES** touch pad and then **SAVE VALUES** touch pad to confirm selection and return to main Cycle menu. Display shows:

INSTR.	**UTENSILS**
GLASSWARE	**PLASTIC**

__ indicates flashing position.

7. Access code is now enabled.

5.9.2 Disabling Access Code

Disable the access code in a sequence similar to enabling:

1. Press **CHANGE VALUES** touch pad. Display shows:

MODIFY	**ADD**
REMOVE	**EXIT**

__ indicates flashing position.

2. Press **CURSOR arrows** (left or right) to select EXIT. Press **CHANGE VALUES** touch pad. Display shows:

PRINT CYCLE VALUES?
NO

3. Press **CHANGE VALUES** touch pad until display shows:

CHANGE MISC. VALUES?
NO

__ indicates flashing position.

4. Press **VALUE arrows** (up or down) to change NO to YES. Press **CHANGE VALUES** touch pad to confirm selection.

5. Press **CHANGE VALUES** touch pad until display shows:

ACCESS CODE KNOWN?
NO

__ indicates flashing position.

6. Press **VALUE arrows** (up or down) to change NO to YES. Press **CHANGE VALUES** touch pad. Display shows:

ENTER OPERATOR
ACCESS CODE = XXXX

Questions? Contact FDA/CDRH/OCE/DID at CDRH-FOISTATUS@fda.hhs.gov or 301-796-8118
FOI - Page 973 of 1276

Records processed under FOIA Request 2011-7650; Released 1/25/12

7. Enter proper access code, then press **CHANGE VALUES** touch pad. Display shows:

ACCESS CODE
YES

__ *indicates flashing position.*

8. Press **VALUE arrows** (up or down) to change YES to NO to disable access code. Press **CHANGE VALUES** touch pad then **SAVE VALUES** touch pad to confirm and return to main Cycle menu. Display shows:

INSTR.	UTENSILS
GLASSWARE	PLASTIC

__ *indicates flashing position.*

9. Access code is now disabled and anyone can modify cycles.

5.10 Conveyor Bypass With ATS Automated Transport System

If the unit is equipped with Reliance® ATS Automated Transport System, it is possible to bypass conveyor operation (because of a mechanical problem, for example) while washer/disinfector is still in operation.

1. Press **CHANGE VALUES** touch pad. Display shows:

MODIFY	ADD
REMOVE	EXIT

__ *indicates flashing position.*

2. Cursor(__) marks selected function. Press **CURSOR arrows** (left or right) to move cursor from MODIFY to EXIT.

3. Press **CHANGE VALUES** touch pad to confirm EXIT selection. Press again until following message is displayed:

CHANGE MISC. VALUES?
NO

__ *indicates flashing position.*

4. Press **VALUES arrows** (up or down) to select YES.

5. Press **CHANGE VALUES** touch pad until following message is displayed:

CONVEYOR BY-PASSED
NO

__ *indicates flashing position.*

Questions? Contact FDA/CDRH/OCE/DID at CDRH-FOISTATUS@fda.hhs.gov or 301-796-8118

Records processed under FOIA Request 2011-7650; Released 1/25/12

6. Press **VALUE arrows** (up or down) to change NO to YES, if you wish to stop using conveyor system. Press **CHANGE VALUES** touch pad to confirm selection and continue making changes, or press **CHANGE VALUES** touch pad then **SAVE VALUES** touch pad to confirm setting and return to main cycle menu.

Questions? Contact FDA/CDRH/OCE/DID at CDRH-FOISTATUS@fda.hhs.gov or 301-796-8118

Records processed under FOIA Request 2011-7650; Released 1/25/12

ROUTINE MAINTENANCE

6

IMPORTANT: *A listing of the Safety Precautions to be observed when operating and servicing this washer/disinfector can be found in SECTION 1 of this manual. Do not operate the equipment until you have become familiar with this information.*

6.1 General

WARNING–PERSONAL INJURY AND/OR EQUIPMENT DAMAGE HAZARD:

- **Regularly scheduled preventive maintenance is required for safe and reliable operation of this equipment. Contact STERIS to schedule preventive maintenance.**
- **Repairs and adjustments to this equipment must be made only by STERIS or STERIS-trained service personnel. Repairs and adjustments performed by unqualified personnel or installation of unauthorized parts could cause personal injury, result in improper equipment performance, void the warranty or result in costly damage. Contact STERIS regarding service options.**

WARNING–PERSONAL INJURY HAZARD: Risk of pinch point between door and upper panel. Do not push on top portion of doors; do not push on door when door is rising; do not push on door when door is jammed.

The sample preventive maintenance guide (**Table 6-1**) included in this section should be used as a guideline for determining the frequency of maintenance. This proves useful in helping ensure proper maintenance of your washer/disinfector.

Maintenance procedures described in this section must be performed as required at the suggested frequency. The indicated frequencies are minimums and can be changed if washer/disinfector use warrants.

If a problem occurs, refer to *SECTION 7, TROUBLESHOOTING.*

Refer to the *Maintenance Manual* (P764330-576) for complete replacement parts lists.

Questions? Contact FDA/CDRH/OCE/DID at CDRH-FOISTATUS@fda.hhs.gov or 301-796-8118

Records processed under FOIA Request 2011-7650; Released 1/25/12

6.2 Preventive Maintenance

The following guide should be followed to properly maintain the washer/disinfector. Some procedures should be carried out only by qualified service technicians. These procedures are noted by a star (*). Contact STERIS when service is required.

NOTE: Preventive maintenance is not covered under warranty.

Table 6-1. Preventive Maintenance Guide

Recommended frequency of inspection is indicated in the right column. Usage and utility conditions may require more or less frequent inspections.		**Suggested Frequency**
1.0	**PREPARATION FOR PREVENTIVE MAINTENANCE**	
1.1	Discuss equipment operation with department personnel.	6 X/year
1.2	Inspect printouts for signs of trouble.	6 X/year
1.3	When required by procedure, shut off all building services and drain all lines. Always follow local occupational health and safety regulations, as well as electric and plumbing codes.	As required
2.0	**EAGLE® 3000 STAGE 3 CONTROL SYSTEM**	
2.1	Inspect for proper operation of printer.	6 X/year
2.2	Inspect for proper operation of touch panel. Verify all touch pads. If faulty, call STERIS.*	6 X/year
2.3	Verify proper date and time are displayed; if not, reset.	6 X/year
2.4	Verify paper take up is working properly.	6 X/year
2.5	Verify printout for darkness, missing dots, etc.	3 X/year
2.6	Ensure buzzer on control PC board is functioning properly.	6 X/year
3.0	**DOOR ASSEMBLY (Each Door on a Double-Door Unit)**	
3.1	Inspect door for ease of operation while a cycle is in progress. If faulty, call STERIS.*	3 X/year
3.2	Inspect door cable and pulleys. Replace if necessary.*	6 X/year
3.3	Verify condition and operation of door limit switch.*	6 X/year
3.4	Verify condition of obstruction proximity sensor.	6 X/year
3.5	Replace door limit switch bottom spring.*	1 X/year
4.0	**CHAMBER COMPONENTS**	
4.1	Inspect rotary spray arm assemblies for free movement and no clogged holes (see *SECTION 6.4.1*).	6 X/year
4.2	Clean bottom filters in wash chamber (see *SECTION 6.3*).	6 X/year
4.3	Remove hard water deposits from interior of chamber (use DECONTAM cycle; see *SECTION 6.4.2*).	6 X/year

**Contact STERIS for this service. Preventive Maintenance is not covered under warranty.*

Questions? Contact FDA/CDRH/OCE/DID at CDRH-FOISTATUS@fda.hhs.gov or 301-796-8118

Records processed under FOIA Request 2011-7650; Released 1/25/12

Table 6-1. Preventive Maintenance Guide (Cont'd)

Recommended frequency of inspection is indicated in the right column. Usage and utility conditions may require more or less frequent inspections.		Suggested Frequency
4.0	**CHAMBER COMPONENTS (Cont'd)**	
4.4	Verify proper water level and temperature.*	3 X/year
4.5	Verify piping system for leaks. Repair if necessary.*	6 X/year
4.6	Verify condition of sliding guides. Replace if necessary.*	3 X/year
5.0	**SUPPLY-LINE STRAINERS**	
	Inspect strainers for debris. Clean as necessary (see *SECTION 6.4.3*).	6 X/year
6.0	**CHEMICALS AND INJECTION PUMPS**	
6.1	Verify suction tube is not clogged, cracked or distorted. If damaged, call STERIS.*	6 X/year
6.2	Inspect and lubricate squeeze tubes. Replace if necessary (see *SECTION 6.6*).	6 X/year
6.3	Verify amount of chemical product injected. Adjust if necessary.	3 X/year
6.4	Lubricate pump roller (see *SECTION 6.6*).	6 X/year
7.0	**COMPRESSOR (if option is present)**	
	Verify intake filter and mufflers. Change if necessary.*	2 X/year
8.0	**CONVEYORS (if option is present)**	
8.1	Refer to SCS Conveyor System *Operator Manual* (P920506-634) and *Maintenance manual* (P764332-715) for more detailed information about preventive maintenance.	
8.2	Refer to Reliance® ATS Automated Transport System *Operator Manual* (P122995-004) and *Maintenance manual* (P764329-141) for more detailed information about preventive maintenance.	
9.0	**PROTECTIVE GROUND TERMINAL***	
	Verify protective conductor at equipment terminal and verify if connection is well secured inside terminal with proper torque equipment. Torque requirement for supply conductor terminals for steam- or electric-heated units (L1-L2-L3-N) is: 7.1 - 8.9 lb/in (0.8-1.0 N•m); Protective conductor terminal is 20 lb/in (2.2 N•m) for steam- and electric-heated units.*	1 X/year
10.0	**FINAL TEST**	
10.1	Clean dirt and lint from components. Verify all wiring, terminals and socket connections for damage or fraying.	6 X/year
10.2	Verify washer/disinfector has proper labels (caution, warning, etc.).	6 X/year
10.3	Install any panel or cover removed during inspection.	6 X/year
10.4	Test washer/disinfector operation.	6 X/year

**Contact STERIS for this service. Preventive Maintenance is not covered under warranty.*

Questions? Contact FDA/CDRH/OCE/DID at CDRH-FOISTATUS@fda.hhs.gov or 301-796-8118

Records processed under FOIA Request 2011-7650; Released 1/25/12

6.3 Daily Cleaning

WARNING–SLIPPING HAZARD: To prevent slips, keep floors dry. Promptly clean up any spills or drippage. For spills or drippage of detergents or other chemicals, follow safety precautions and handling procedures set forth on detergent or chemical label and/or Material Safety Data Sheet (MSDS).

1. After last cycle of day, allow unit to cool, and then remove and clean bottom filters of wash chamber. Always clean filters while still wet, before foreign matter dries.
2. Remove riser valve and inspect for debris. Brush off and rinse under tap water if necessary.

6.4 Weekly Cleaning

6.4.1 Routine Cleaning Procedures

WARNING–SLIPPING HAZARD: To prevent slips, keep floors dry. Promptly clean up any spills or drippage. For spills or drippage of detergents or other chemicals, follow safety precautions and handling procedures set forth on detergent or chemical label and/or Material Safety Data Sheet (MSDS).

CAUTION – POSSIBLE EQUIPMENT DAMAGE: Use nonabrasive cleaners when cleaning unit. Follow directions on containers and rub in a back-and-forth motion (in same direction as surface grain). Abrasive cleaners will damage stainless steel. Cleaners rubbed in a circular motion or applied with a wire brush or steel wool on door and chamber assemblies can be harmful to stainless steel. Do not use these cleaners on painted surfaces.

1. Clean washer exterior as outlined below. Using general cleaner for general stains, stainless-steel stain remover for stubborn stains and stainless-steel polish to keep equipment looking like new.
   a. Using damp cloth or sponge, apply cleaner in back-and-forth motion, rubbing in same direction as surface grain.
   b. Thoroughly wipe off cleaner.
   c. Polish surface with clean, dry, lint-free cloth.
2. Wash chamber interior with moderately alkaline detergent solution. Rinse with tap water and dry with lint-free cloth.

   NOTE: If interior is stained, use a general cleaner to remove general stains or a stainless-steel stain remover for stubborn stains. Using a damp cloth or sponge, apply cleaner in a back-and-forth motion, rubbing in same direction as surface grain. Thoroughly wipe off cleaner and polish with a clean, dry, lint-free cloth.
3. Clean wash chamber rotary spray arm assembly as follows:
   a. Remove screw securing rotary spray arm assembly on top of chamber and lower rotary spray arm assembly.
   b. Remove locking pin securing each spray arm on rotary spray arm hub.
   c. Rinse each spray arm under running water to clean out sediment.
   d. Use fine wire (approximately wire gauge of paper clip) to clean sediment from spray nozzles. Rinse under running water.
   e. Reinstall spray arms on rotary spray arm hub.
   f. Reinstall locking pin to secure both spray arms.
   g. Reattach rotary spray arm assembly to top of wash chamber.
4. Clean bottom rotary spray arms in same way as top rotary spray arms.

Questions? Contact FDA/CDRH/OCE/DID at CDRH-FOISTATUS@fda.hhs.gov or 301-796-8118

Records processed under FOIA Request 2011-7650; Released 1/25/12

CAUTION – POSSIBLE EQUIPMENT DAMAGE: Wipe all plastic or painted surfaces with a soft cloth dampened with 70% isopropyl alcohol or any nonabrasive house hold cleaner (such as glass or countertop cleaners).

5. Clean rotary spray arms on accessories in same way as chamber spray arms.

6.4.2 DECONTAM Cycle

WARNING – CHEMICAL BURN AND/OR EYE INJURY HAZARD:

- **Detergents are caustic and can cause adverse effects to exposed tissues. Do not get in eyes, on skin or attempt to swallow. Read and follow the precautions and instructions on the detergent label and in the Material Safety Data Sheet (MSDS) prior to handling the detergent, refilling the detergent container or servicing the detergent injection pump and lines. Wear appropriate Personal Protective Equipment (PPE) whenever handling the detergent or servicing the detergent injection pump and lines.**
- **Wear appropriate Personal Protective Equipment (PPE) when using a descaling product. Avoid contact with the eyes or skin. If a descaling product spills or splashes on you, flush the affected area with water for 15 minutes. If swallowed, DO NOT induce vomiting. Administer an alkali with plenty of water. Seek medical attention immediately.**

NOTE: It is the responsibility of the customer to perform the decontamination of their unit once a week, as prescribed.

Decontaminate and descale chamber as follows, using the DECONTAM cycle expressly designed for this purpose:

1. Place an empty manifold accessory without bar cod tag into wash chamber or on conveyor modules.
2. Using **CYCLE MENU** and **SELECT CYCLE** touch pads, select DECONTAM cycle on third Cycle menu. Press **CYCLE/START** touch pad. Display shows:

   PRESS START TO
   PROCESS - DECONTAM

3. Press **CYCLE/START** touch pad again to confirm DECONTAM cycle selection. DECONTAM cycle starts processing. Display shows:

   OPEN LOAD DOOR AND
   ADD DESCALER

4. Open load door, display shows:

   PLEASE CLOSE DOOR
   TO START DECONTAM

5. Pour 25 oz (740 mL) of descaling product into chamber and close door.

   *NOTE: If **CYCLE/START** touch pad is not pressed within 4 seconds, display returns to main Cycle menu.*

6. At completion of cycle, open door and allow unit to air dry.
7. Verify chamber bottom filters for debris. If debris is present, rinse filters under running water to clean.

   NOTE: Contact STERIS for information on specific cleaning and descaling products recommended for use with this equipment.

CAUTION – POSSIBLE EQUIPMENT DAMAGE: Always position each manifold and/or bottom rotary spray over a manifold connector before operating unit. If manifolds and/or bottom rotary sprays are not positioned correctly, damage will result and unit will be unable to effectively wash load.

Questions? Contact FDA/CDRH/OCE/DID at CDRH-FOISTATUS@fda.hhs.gov or 301-796-8118

Records processed under FOIA Request 2011-7650; Released 1/25/12

6.4.3 Building Supply-Line Strainers

WARNING – BURN HAZARD: Allow piping to cool before inspecting and/or cleaning supply-line strainers.

WARNING–PERSONAL INJURY AND/OR EQUIPMENT DAMAGE HAZARD: Repairs and adjustments to this equipment must be made only by STERIS or STERIS-trained service personnel. Repairs and adjustments performed by unqualified personnel or installation of unauthorized parts could cause personal injury, result in improper equipment performance, void the warranty or result in costly damage. Contact STERIS regarding service options.

WARNING – ELECTRIC SHOCK AND/OR BURN HAZARD: Disconnect all utilities to washer/disinfector before servicing. Do not service unit unless all utilities have been properly locked out. Always follow electrical safety-related work practice standards.

WARNING–SLIPPING HAZARD: To prevent slips, keep floors dry. Promptly clean up any spills or drippage. For spills or drippage of detergents or other chemicals, follow safety precautions and handling procedures set forth on detergent or chemical label and/or Material Safety Data Sheet (MSDS).

NOTE: Contact facility maintenance technician.

Clean building supply-line strainers as follows:

1. Position building electrical disconnect switch (circuit breaker) to OFF position.
2. Close building supply lines: hot water, cold water, purified water (if unit is equipped with purified water rinse option) and steam.
3. Position **power** switch (located under load side control) to OFF.
4. Remove top access panels.
5. Remove and clean strainers under running water.
6. Reinstall strainers.
7. Reinstall access panels.
8. Open building supply lines.
9. Restore power to unit.

Questions? Contact FDA/CDRH/OCE/DID at CDRH-FOISTATUS@fda.hhs.gov or 301-796-8118

Records processed under FOIA Request 2011-7650; Released 1/25/12

6.5 Chemical Container Replacement

WARNING – CHEMICAL BURN AND/OR EYE INJURY HAZARD: Detergents are caustic and can cause adverse effects to exposed tissues. Do not get in eyes, on skin or attempt to swallow. Read and follow the precautions and instructions on the detergent label and in the Material Safety Data Sheet (MSDS) prior to handling the detergent, refilling the detergent container or servicing the detergent injection pump and lines. Wear appropriate Personal Protective Equipment (PPE) whenever handling the detergent or servicing the detergent injection pump and lines.

CAUTION – POSSIBLE EQUIPMENT DAMAGE: When choosing a detergent, select one with a low-chloride content. Detergents with a high-chloride content must not be used, as such detergents may harm stainless steel.

NOTE: For detergents, note the following:

1) Always use a non-foaming detergent for effective cleaning and proper pump operation.

*2) Refer to SECTION 2.3, DETERGENTS AND CHEMICAL ADDITIVES SPECIFICATIONS, and follow detergent manufacturer's recommendations to determine the temperature of the Wash treatment. Refer to **Table 5-1**, Cycle Description chart, for available temperature ranges.*

3) Follow detergent manufacturer's recommendations for amount of detergent to use depending on water hardness.

4) Contact STERIS for information on specific cleaning and descaling products recommended for use with this equipment.

1. If detergent and/or lubricant (if option applies) is low or has run out, install new container.
2. Place low level sensor upright in container (refer to Figure 4-1).
3. Insert squeeze/suction tube into new container.
4. Refer to *SECTION 4.2, PRIMING PROCEDURE*, to fill tubing with detergent/lubricant (if option applies).

***IMPORTANT:** DO NOT insert suction tube into container without verifying it is for the proper application (refer to SECTION 2.3, DETERGENTS AND CHEMICAL ADDITIVES SPECIFICATIONS, for details).*

Questions? Contact FDA/CDRH/OCE/DID at CDRH-FOISTATUS@fda.hhs.gov or 301-796-8118

070

Records processed under FOIA Request 2011-7650; Released 1/25/12

6.6 Verify and Lubricate Peristaltic Injection Pump Squeeze Tubes

CAUTION – POSSIBLE EQUIPMENT DAMAGE: Always use a silicone lubricant to lubricate squeeze tubes. Petroleum-based lubricants, such as Vaseline®[1] or grease, will cause squeeze tubes to melt.

Each month, lubricate and verify detergent squeeze tube(s) as follows:

1. Use silicone lubricant (P117950-599) to lubricate section of squeeze tube in contact with pump(s).
2. Verify squeeze tube(s) for any leaks or signs of wear. If necessary, replace tube as follows:
   a. If unit is **ON**, position **power** switch to **OFF**.
   b. Remove upper service access panel. Injection pumps are located on left of load side (refer to Figure 3-1).
   c. Remove clamps and disconnect squeeze tube ends from suction and feed lines.
   d. Remove screws attaching injection pump faceplate to injection pump head. Lift faceplate away from pump head.
   e. To remove squeeze tube from pump head, pull out tube by one end. Discard tube.
   f. Clean all pump surfaces.
   g. Insert one end of new tube into pump head and rotate roller block manually.
   h. Liberally spread silicone lubricant (P117950-599) over rollers in roller block and all tubing surfaces in contact with pump head.
   i. Return faceplate to pump head and fasten with previously removed screws.
   j. Connect ends of tube to suction and feed lines. Attach clamps to both lines.
   k. Reinstall upper service access panel.
   l. Refer to *SECTION 4.2, PRIMING PROCEDURE*, to fill tubing with detergent.
   m. Position **power** switch to **ON**, initiate cycle, and verify squeeze tube operation.

[1] *Vaseline is a trademark of Cheseborough Pond's Incorporated.*

Questions? Contact FDA/CDRH/OCE/DID at CDRH-FOISTATUS@fda.hhs.gov or 301-796-8118

Records processed under FOIA Request 2011-7650; Released 1/25/12

6.7 Verifying Power Doors

WARNING – BURN HAZARD: Wear appropriate Personal Protective Equipment (PPE) and open door slowly if it is necessary to open during a cycle. Hot water/steam may be sprayed through door opening when verifying automatic stop while washer/disinfector is operating.

WARNING–PERSONAL INJURY HAZARD: Risk of pinch point between door and upper panel. Do not push on top portion of doors; do not push on door when door is rising; do not push on door when door is jammed.

Verify operation of vertical sliding door(s). Ensure door operates smoothly. Refer to *SECTION 7, TROUBLESHOOTING,* if door does not operate smoothly.

Verify operation of door safety switch as follows:

1. Wearing appropriate Personal Protective Equipment (PPE), attempt to initiate a cycle with load side door open.
2. Close door and start cycle. Wearing appropriate Personal Protective Equipment (PPE), slowly open door to verify operation of automatic stop.
3. Repeat for unload side door if double-door unit.

6.8 Changing Printer Paper Roll

See Figure 6-1.

NOTE: Do not operate printer without paper.

1. Open printer door.
2. Grasp remaining paper and pull it upward and out of printer.
3. Remove take-up spindle from drive mechanism by pulling it left.
4. Remove paper roll from take-up spindle and set empty take-up spindle aside.
5. Lower platen and remove lower paper spindle by pulling it straight forward.
6. Place new paper roll onto lower spindle with paper feeding downward from back of paper roll.

   NOTE: Verify the paper roll is positioned correctly. Thermal printer does not print if the paper roll is inserted backwards. Do not use other brands of paper, use only STERIS thermal paper (P129359-008). Damage to printer mechanism can occur if paper of different width or thickness is used.
7. Place lower spindle (with new paper roll) back into position by pressing from front until it snaps into place.
8. Pull four or five inches of paper out from roll and tear corners off end.
9. Slide tab of paper roll into printer from back (with platen still in down position) until it exits from front of printer.
10. Grasp tab of paper, pull up 10 to 12" (25 to 30 cm) of paper and feed this paper through opening in platen.

Questions? Contact FDA/CDRH/OCE/DID at CDRH-FOISTATUS@fda.hhs.gov or 301-796-8118

Records processed under FOIA Request 2011-7650; Released 1/25/12

11. Insert tab of new paper roll into slot of take-up spindle and rotate spindle to secure paper in slot.
12. Raise platen back up into position and snap in place under catch.
13. Press take-up spindle back onto drive mechanism and allow motor to rotate spindle to verify paper is secured to take-up roll.
14. Set **POWER-OFF/STANDBY** switch to **OFF/STANDBY** position then to **POWER** to verify paper is correctly routed into mechanism and printer prints. Printer does not print if thermal paper was placed on wrong side.
15. Close printer door.

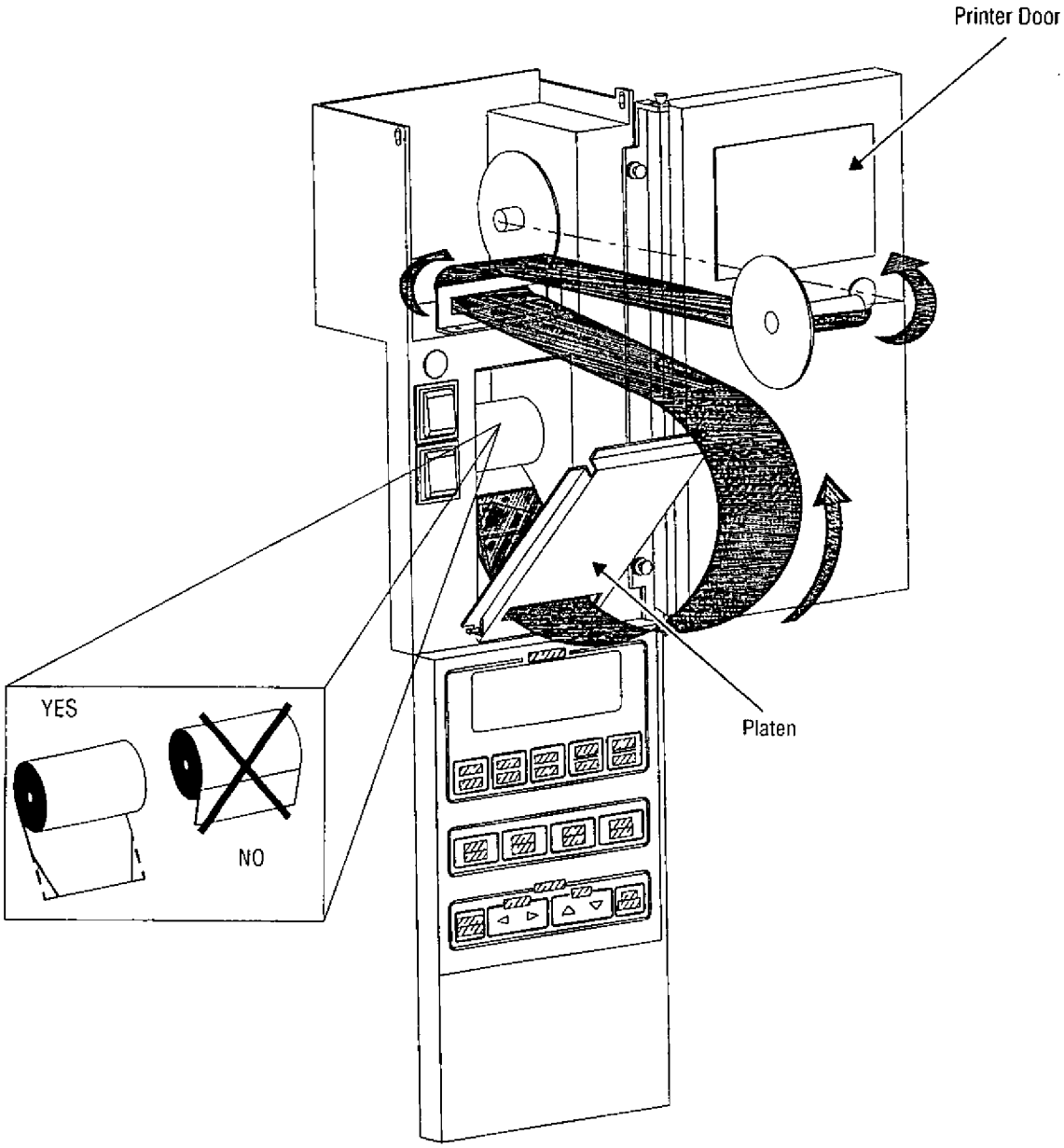

Figure 6-1. Changing Printer Paper Roll

Questions? Contact FDA/CDRH/OCE/DID at CDRH-FOISTATUS@fda.hhs.gov or 301-796-8118

Records processed under FOIA Request 2011-7650; Released 1/25/12

6.9 Storing Thermal Paper

Thermal paper is subject to fading with time, humidity and exposure to light.

It is the manufacturer's recommendation that thermal paper be stored in a dark place with an average ambient temperature of less than 77°F (25°C) and a relative humidity less than 65%. Under these conditions, the paper remains readable for at least five years. It is recommended that if the printed data is to be retained for periods of time longer than five years, an additional photocopy should be made for record retention. In any case, a duplicate set of records should be maintained in the files of the engineering or maintenance departments.

Thermal paper begins to develop color at about 158°F (70°C), however, under humid conditions, it might begin to develop at an accelerated rate. If stored for 24 hours at 140°F (60°C), the paper shows some signs of development. It also shows signs of development if stored for 24 hours at 113°F (45°C) and a relative humidity of 90%.

Do not store thermal paper next to other chemically-treated papers — such as pressure sensitive paper or other types of recording round charts — as this may cause fading in print. If thermal paper is to be stored in the same area, always ensure it and other chemically treated papers are kept in separate envelopes.

Thermal paper discolors when exposed to direct sunlight.

6.10 Emergency Stop Buttons Verification

WARNING–PERSONAL INJURY HAZARD:

- **In case of an emergency situation involving conveyor modules, always press START/STOP pushbutton to stop all conveyor operation.**
- **In case of an emergency situation involving SCS-FO or SCS-2W-FO conveyor, depressurize conveyor line by pressing Pressure-Release pushbutton on SCS-FO or SCS-2W-FO conveyor.**

For Reliance ATS Automated Transport System, refer to *Operator Manual* (P122995-004) for more details on **START/STOP** pushbutton verification.

For SCS Conveyor System, refer to *Operator Manual* (P920506-634) for more details on Pressure-Release pushbutton verification.

Questions? Contact FDA/CDRH/OCE/DID at CDRH-FOISTATUS@fda.hhs.gov or 301-796-8118

Records processed under FOIA Request 2011-7650; Released 1/25/12

Healthcare
Capital Equipment

Questions? Contact FDA/CDRH/OCE/DID at CDRH-FOISTATUS@fda.hhs.gov or 301-796-8118

Records processed under FOIA Request 2011-7650; Released 1/25/12

TROUBLESHOOTING

7

IMPORTANT: *A listing of the Safety Precautions to be observed when operating and servicing this washer/disinfector can be found in SECTION 1 of this manual. Do not operate the equipment until you have become familiar with this information.*

7.1 General

WARNING–PERSONAL INJURY AND/OR EQUIPMENT DAMAGE HAZARD: Repairs and adjustments to this equipment must be made only by STERIS or STERIS-trained service personnel. Repairs and adjustments performed by unqualified personnel or installation of unauthorized parts could cause personal injury, result in improper equipment performance, void the warranty or result in costly damage. Contact STERIS regarding service options.

WARNING – ELECTRIC SHOCK AND/OR BURN HAZARD:

- **Disconnect all utilities to washer/disinfector before servicing. Do not service unit unless all utilities have been properly locked out. Always follow electrical safety-related work practice standards.**
- **Fasteners and star washers are used to ensure protective bonding continuity. Always reinstall any star washer which may have been removed during installation or servicing.**

This section describes the types of washer malfunctions which may occur and indicates probable causes.

If you are unable to correct the problem with use of the Troubleshooting Charts (**Table 7-1** and **Table 7-2**), or if a problem occurs that is not described on the charts, please call STERIS. Service charges may be incurred. Consult your warranty for details.

NEVER PERMIT UNQUALIFIED PERSONS TO SERVICE THE RELIANCE 444 SINGLE-CHAMBER WASHER/DISINFECTOR.

IMPORTANT: *When any alarm condition occurs, washer and conveyor (if equipped) operations automatically stop.*

Table Descriptions:

Table 7-1 – Problems where NO alarm screen and printout occur.

Table 7-2 – Problems where alarm screen and/or printout occur.

WARNING – SLIPPING HAZARD: To prevent slips, keep floors dry. Promptly clean up any spills or drippage. For spills or drippage of detergents or other chemicals, follow safety precautions and handling procedures set forth on detergent or chemical label and/or Material Safety Data Sheet (MSDS).

Questions? Contact FDA/CDRH/OCE/DID at CDRH-FOISTATUS@fda.hhs.gov or 301-796-8118

676

Records processed under FOIA Request 2011-7650; Released 1/25/12

Table 7-1. Troubleshooting Chart – No Alarm Screen and Printout

PROBLEM	POSSIBLE CAUSE AND CORRECTION
1. Interior light does not turn on.	1. **POWER-OFF/STANDBY** switch is in **OFF/STANDBY** position. Position to **POWER**. 2. Unit is still in Service mode. Switch to Automatic mode, before starting processing, by pressing **EXTEND CYCLE** touch pad. 3. Interior light bulb is burned out. Replace bulb. 4. Open fuse on connector PC board inside console assembly. Call STERIS.*
2. Cycle does not start when **CYCLE/START** touch pad is pressed. or: Pump does not start during a treatment.	1. Door has been left open. Close and press **CYCLE/START** touch pad. 2. If unit is equipped with conveyor system, an **Emergency Stop** button is depressed. Pull out all **Emergency Stop** buttons and press **CYCLE/START** touch pad twice. 3. Call STERIS.*
3. Generated printout is light or blank, or parts of characters are missing on generated printout.	1. Printer paper installed backwards. Reinstall paper roll with paper feeding downward from back of roll (refer to *SECTION 6.8*). 2. Incorrect printer paper used. Use recommended products; do not use other brands of thermal paper. Use only STERIS thermal paper (P129359-008). 3. Printer head is dirty. Call STERIS.* 4. Printer is defective. Call STERIS.* 5. Printer PC Board is defective. Call STERIS.*
4. Insufficient or no water entering chamber through spray system, manifolds and/or bottom rotary spray arms.	1. Accessory header(s) incorrectly positioned in chamber. Ensure each accessory header is positioned directly over a manifold connector. 2. Rotary spray arms clogged. Clean spray arms (refer to *SECTION 6.4.1*). 3. Chamber bottom filters may be clogged. Clean if necessary (refer to *SECTION 6.3*). 4. Call STERIS.*
5. Water leaks from washer/disinfector.	1. Tighten all clamps and connections. 2. If situation reoccurs, call STERIS.*
6. Pump starts before appropriate chamber water level is reached.	1. Ensure water level sensor float moves freely. Clean if necessary. 2. Call STERIS.*

**Service charges may be incurred. Consult your warranty for details.*

677
Questions? Contact FDA/CDRH/OCE/DID at CDRH-FOISTATUS@fda.hhs.gov or 301-796-8118

Records processed under FOIA Request 2011-7650; Released 1/25/12

Table 7-1. Troubleshooting Chart – No Alarm Screen and Printout (Cont'd)

PROBLEM	POSSIBLE CAUSE AND CORRECTION
7. Pump does not start during a treatment. or: Treatment stops for no apparent reason.	1. Chamber door(s) may be open. Close and press **CYCLE/ START** touch pad. 2. Call STERIS.*
8. Foam in chamber.	1. Wrong type of detergent. Refer to detergent specifications in *SECTION 2.3* and follow detergent manufacturer's recommendations for amount of detergent to be used. 2. Too much chemical is injected during treatment. Verify chemical injection rate in Service mode. 3. If condition reoccurs, call STERIS.*
9. Treatment stops for no apparent reason.	1. Chamber door(s) not fully closed. Close securely. 2. Call STERIS.*
10. Too much water entering chamber during treatment. Water going to overflow drain.	1. Ensure water level sensor float moves freely. Clean if necessary. 2. Call STERIS.*
11. Chamber does not drain completely.	1. Chamber bottom filters clogged. Clean filters (refer to *SECTION 6.3*). 2. Drain line plugged. Purge drain line. 3. Building piping obstructed. Verify piping and purge if necessary. 4. If condition reoccurs, call STERIS.*
12. Loads come out dirty.	1. Empty chemical supply. Install new supply as explained in *SECTION 6.5*. 2. Wrong type of detergent used. Refer to detergent specifications in *SECTION 2.3* and follow detergent manufacturer's recommendations for amount of detergent to be used. 3. Rotary spray arms clogged. Clean spray arms (refer to *SECTION 6.4.1*). 4. Call STERIS.*
13. Display locked; pressing touch pad has no effect.	1. Multiple alarm conditions have occurred simultaneously; position **POWER-OFF/STANDBY** switch to **OFF/ STANDBY**, then back to **POWER**. 2. If condition reoccurs, call STERIS.*

**Service charges may be incurred. Consult your warranty for details.*

Questions? Contact FDA/CDRH/OCE/DID at CDRH-FOISTATUS@fda.hhs.gov or 301-796-8118

Records processed under FOIA Request 2011-7650; Released 1/25/12

Table 7-1. Troubleshooting Chart – No Alarm Screen and Printout (Cont'd)

PROBLEM	POSSIBLE CAUSE AND CORRECTION
14. If unit is equipped with conveyor modules, conveyor did not move basket forward.	1. **POWER-OFF/STANDBY** switch is in **OFF/STANDBY** position. Position to **POWER**. 2. Conveyor operation is bypassed. Go to Change Miscellaneous Values menu and select **NO** for Conveyor Bypass. 3. Previous cycle was aborted. Start cycle manually by selecting cycle, then press **CYCLE/START** touch pad twice to initiate cycle. Conveyor operation resumes.
15. If washer is equipped with double door, unload door fails to open.	Safety interlock feature engaged. Unload door does not open until washer has run one complete cycle.
16. Screen indicates "SERVICE TEST" when **POWER-OFF/STANDBY** switch is positioned to **POWER.**	1. Washer in Service mode. Switch washer to Automatic mode by pressing **EXTEND CYCLE** touch pad. 2. If condition reoccurs, call STERIS.*
17. If unit is not equipped with conveyor modules, 4-Amp fuse for incoming 120 V line is blowing intermittently.	Ensure static bags for load/unload table plugs (p7/p8) are not filling up with water.

**Service charges may be incurred. Consult your warranty for details.*

7.2 Control Monitoring and Communication System

IMPORTANT: *When any alarm occurs, washer and conveyor (if equipped) operations automatically stop. After correcting washer problem, press* ***CYCLE/START*** *touch pad twice to resume normal cycle and conveyor operation.*

Table 7-2. Troubleshooting Chart – Alarm Screen and/or Printout

PROBLEM	POSSIBLE CAUSE AND CORRECTION
1. **STOP/RESET** touch pad was pressed. Display shows: **STOP WAS PRESSED** **PRESS START TO RESUM** Printout message: STOP PRESSED HH:MM:SS	Press **ALARM REPLY** touch pad to silence alarm buzzer; Press **CYCLE/START** touch pad to resume operation; or press **STOP/RESET** touch pad again to abort cycle operation.

Questions? Contact FDA/CDRH/OCE/DID at CDRH-FOISTATUS@fda.hhs.gov or 301-796-8118
FOI - Page 991 of 1276

Records processed under FOIA Request 2011-7650; Released 1/25/12

Table 7-2. Troubleshooting Chart – Alarm Screen and/or Printout (Cont'd)

PROBLEM	POSSIBLE CAUSE AND CORRECTION
2. Chamber sump is taking too long to fill with water. Alarm sounds, and display shows: **SUMP TOO LONG IN FILL** Printout message: ALARM: SUMP HH:MM:SS TOO LONG IN FILL	1. Supply valves closed. Press **ALARM REPLY** touch pad to silence alarm buzzer. Open building and washer supply valves and press **CYCLE/START** touch pad to resume operation. 2. If condition reoccurs, call STERIS.*
3. Chamber sump is taking too long to drain. Alarm sounds, and display shows: **SUMP TOO LONG IN DRAIN** Printout message: ALARM: SUMP HH:MM:SS TOO LONG IN DRAIN	1. Water level sensor stuck or obstructed. Press **ALARM REPLY** touch pad to silence alarm buzzer. Verify water level sensor, clean if necessary and press **CYCLE/START** touch pad to resume operation. 2. Air supply valves closed or air pressure is below specification. Press **ALARM REPLY** touch pad to silence alarm buzzer. Open building and washer air supply valves and press **CYCLE/START** touch pad to resume operation. 3. If condition reoccurs, call STERIS.*
4. Water temperature in chamber sump is below the programmed temperature. Alarm sounds, and display shows: **ALARM: SUMP FAILED** **TO REACH SET TEMP** Printout message: ALARM: SUMP HH:MM:SS FAILED TO REACH SET TEMP	1. Steam supply valves closed. Press **ALARM REPLY** touch pad to silence alarm buzzer. Open building and washer steam supply valves and press **CYCLE/START** touch pad to resume operation. 2. Excess condensate in building supply lines. Press **ALARM REPLY** touch pad to silence alarm buzzer. Verify steam traps in facility supply lines. 3. If condition reoccurs, call STERIS.*
5. Chamber sump RTD is detecting out-of-range temperatures. Alarm sounds, and display shows: **ALARM: SUMP RTD** **DEFECTIVE** Printout message: ALARM: SUMP RTD HH:MM:SS DEFECTIVE	1. RTD connector unplugged. Press **ALARM REPLY** touch pad to silence alarm buzzer. Verify RTD connection and press **CYCLE/START** touch pad to resume operation. 2. If condition reoccurs, call STERIS.*

**Service charges may be incurred. Consult your warranty for details.*

680

Questions? Contact FDA/CDRH/OCE/DID at CDRH-FOISTATUS@fda.hhs.gov or 301-796-8118

Records processed under FOIA Request 2011-7650; Released 1/25/12

Table 7-2. Troubleshooting Chart – Alarm Screen and/or Printout (Cont'd)

PROBLEM	POSSIBLE CAUSE AND CORRECTION
6. Chamber RTD detecting out-of-range temperature. Alarm sounds, and display shows: **ALARM: SUMP WATER** **TEMP TOO HIGH** Printout message: ALARM: SUMP WATER HH:MM:SS TEMP TOO HIGH	Press **ALARM REPLY** touch pad to silence alarm buzzer and call STERIS.*
7. If washer is equipped with Drying System option, dryer RTD is detecting out-of-range temperatures. Alarm sounds, and display shows: **ALARM: DRYING RTD** **DEFECTIVE** Printout message: ALARM: DRYING RTD HH:MM:SS DEFECTIVE	1. RTD connector unplugged. Press **ALARM REPLY** touch pad to silence alarm buzzer. Verify RTD connection and press **CYCLE/START** touch pad to resume operation. 2. If condition reoccurs, call STERIS.*
8. If washer is equipped with Drying System option, dryer RTD is detecting out-of-range temperatures. Alarm sounds, and display shows: **ALARM: DRYING** **TEMP TOO HIGH** Printout message: ALARM: DRYING HH:MM:SS TEMP TOO HIGH	1. Drying RTD is detecting out-of-range temperatures. 2. Press **ALARM REPLY** touch pad to silence alarm buzzer. 3. Call STERIS.*

**Service charges may be incurred. Consult your warranty for details.*

Questions? Contact FDA/CDRH/OCE/DID at CDRH-FOISTATUS@fda.hhs.gov or 301-796-8118

Records processed under FOIA Request 2011-7650; Released 1/25/12

Table 7-2. Troubleshooting Chart – Alarm Screen and/or Printout (Cont'd)

PROBLEM	POSSIBLE CAUSE AND CORRECTION
9. Alarm sounds, and display shows: **ALARM: PUMP X** **DETERGENT EMPTY** Printout message: ALARM: PUMP X HH:MM:SS DETERGENT EMPTY *__Message can show: Enzyme; Pump 1, 2, 3; or Lubricant*	1. Empty chemical container. Press **ALARM REPLY** touch pad to silence alarm buzzer. Install new supply (refer to *SECTION 6.5*) and press **CYCLE/START** touch pad to resume operation. 2. Low level sensor out of container. Press **ALARM REPLY** touch pad to silence alarm buzzer. Insert level sensor in container and press **CYCLE/START** touch pad to resume operation. 3. If condition reoccurs, call STERIS.*
10. Load end door remains closed after **DOOR OPEN** touch pad was pressed. Alarm sounds, and display shows: **ALARM: LOAD DOOR** **DID NOT OPEN** Printout message: ALARM: LOAD DOOR HH:MM:SS DID NOT OPEN	1. Load door stayed closed after **DOOR OPEN** touch pad was pressed: a. Press **ALARM REPLY** touch pad to silence alarm buzzer. b. Press **DOOR CLOSE** touch pad. c. Press **DOOR OPEN** touch pad. d. If condition reoccurs, call STERIS.* 2. If unit is equipped with conveyor modules: a. Press **ALARM REPLY** touch pad, display shows: PLEASE LOAD CHAMBER THEN CLOSE DOOR b. Press **DOOR CLOSE** touch pad. c. Press **DOOR OPEN** touch pad. d. If condition reoccurs, call STERIS.* 3. Air supply valves are closed or air pressure is below specifications. Press **ALARM REPLY** touch pad to silence alarm buzzer. Open building and washer air supply valves and press **DOOR OPEN** touch pad on load end control panel to open door. If condition reoccurs, call STERIS.*

**Service charges may be incurred. Consult your warranty for details.*

Questions? Contact FDA/CDRH/OCE/DID at CDRH-FOISTATUS@fda.hhs.gov or 301-796-8118

Records processed under FOIA Request 2011-7650; Released 1/25/12

Table 7-2. Troubleshooting Chart – Alarm Screen and/or Printout (Cont'd)

PROBLEM	POSSIBLE CAUSE AND CORRECTION
11. Load end door remains open after **DOOR CLOSE** touch pad was pressed. Alarm sounds, and display shows: **ALARM: LOAD DOOR** **DID NOT CLOSE** Printout message: ALARM: LOAD DOOR HH:MM:SS DID NOT CLOSE	1. Load door stayed open after **DOOR CLOSE** touch pad was pressed. Press **ALARM REPLY** touch pad to silence alarm buzzer. Verify for door obstruction. If condition reoccurs, call STERIS.* 2. If unit is equipped with conveyor modules: a. Press **ALARM REPLY** touch pad, display shows: LOAD CHAMBER THEN CLOSE DOOR b. Verify for door obstruction. c. Press **DOOR CLOSE** touch pad. d. When door is closed, press **CYCLE/START** touch pad to select cycle. e. Select and start cycle. If condition reoccurs, call STERIS.* 3. Air supply valves are closed or air pressure is below specifications. Press **ALARM REPLY** touch pad to silence alarm buzzer. Open building and washer air supply valves and press **DOOR OPEN** touch pad on load end control panel to open door. If condition reoccurs, call STERIS.*
12. Alarm sounds, and display shows: **ALARM: LOAD DOOR OPEN** **PLEASE CLOSE DOOR**	1. Unload side **DOOR OPEN** touch pad has been pressed to open unload door, but load door is open. Control does not allow unload door to open, thus avoiding cross-contamination. 2. Press **DOOR CLOSE** touch pad on load side of unit to close load door. Unload side door may be opened by pressing unload side **DOOR OPEN** touch pad.
13. If washer is equipped with power double door, unload end door was opened during cycle processing. Alarm sounds, and display shows: **ALARM: UNLOAD DOOR** **OPEN DURING PROCESS** Printout message: ALARM: UNLOAD DOOR HH:MM:SS OPEN DURING PROCESS	1. Press **ALARM REPLY** touch pad to silence alarm buzzer. Close unload door and press **CYCLE/START** touch pad to resume operation. 2. If condition reoccurs, call STERIS.*

**Service charges may be incurred. Consult your warranty for details.*

Questions? Contact FDA/CDRH/OCE/DID at CDRH-FOISTATUS@fda.hhs.gov or 301-796-8118

Records processed under FOIA Request 2011-7650; Released 1/25/12

Table 7-2. Troubleshooting Chart – Alarm Screen and/or Printout (Cont'd)

PROBLEM	POSSIBLE CAUSE AND CORRECTION
14. If washer is equipped with power double door, unload end door remains closed after **DOOR OPEN** touch was pressed. Alarm sounds, and display shows: **ALARM: UNLOAD DOOR** **DID NOT OPEN** Printout message: ALARM: UNLOAD DOOR HH:MM:SS DID NOT OPEN	1. Unload door stayed closed after **DOOR OPEN** touch pad was pressed: a. Press **ALARM REPLY** touch pad to silence alarm buzzer. b. Verify if unit air supply line is open. Press **CYCLE/ START** touch pad. If condition reoccurs, call STERIS.* 2. If unit is equipped with conveyor modules: a. Press **ALARM REPLY** touch pad, display shows: PRESS START TO RESUM b. Verify if unit air supply line is open. Press **CYCLE/ START** touch pad. If condition reoccurs, call STERIS.* 3. Air supply valves are closed or air pressure is below specifications. Press **ALARM REPLY** touch pad to silence alarm buzzer. Open building and washer air supply valves and press **DOOR OPEN** touch pad on load end control panel to open door. If condition reoccurs, call STERIS.*
15. If washer is equipped with power double door, unload end door remains open after **DOOR CLOSED** touch pad was pressed. Alarm sounds, and display shows: **ALARM: UNLOAD DOOR** **DID NOT CLOSE** Printout message: ALARM: UNLOAD DOOR HH:MM:SS DID NOT CLOSE	1. Unload door stayed open after **DOOR CLOSE** touch pad was pressed. 2. Press **ALARM REPLY** touch pad to silence alarm buzzer. Verify for door obstruction. If condition reoccurs, call STERIS.* 3. If unit is equipped with conveyor modules: a. Press **ALARM REPLY** touch pad, display shows: UNLOAD CHAMBER THEN CLOSE DOOR b. Position basket onto C3 conveyor. c. Press **DOOR CLOSE** touch pad, operation resumes automatically. d. If condition reoccurs, call STERIS.* 4. Air supply valves are closed or air pressure is below specifications. Press **ALARM REPLY** touch pad to silence alarm buzzer. Open building and washer air supply valves and press **DOOR OPEN** touch pad on load end control panel to open door. If condition reoccurs, call STERIS.*

**Service charges may be incurred. Consult your warranty for details.*

Questions? Contact FDA/CDRH/OCE/DID at CDRH-FOISTATUS@fda.hhs.gov or 301-796-8118

684

Records processed under FOIA Request 2011-7650; Released 1/25/12

Table 7-2. Troubleshooting Chart – Alarm Screen and/or Printout (Cont'd)

PROBLEM	POSSIBLE CAUSE AND CORRECTION
16. Display shows: **UNLOAD DOOR OPEN** **PLEASE CLOSE DOOR**	1. Load side **DOOR OPEN** touch pad has been pressed to open load door, but since unload door is open, control does not allow load door to open, thus avoiding cross-contamination. 2. Press **DOOR CLOSE** touch pad on unload side of unit to close unload door. Load side door may be opened by pressing load side **DOOR OPEN** touch pad. 3. If condition reoccurs, call STERIS.*
17. Display shows: **MAINTENANCE DUE!** **CALL SERVICE** Printout message: MAINTENANCE DUE!	1. Press **ALARM REPLY** touch pad to silence alarm buzzer. 2. Call STERIS.*
18. Display shows: **UNKNOWN FAILURE DETECTED**	Control Program error detected: 1. May be from an erratic line voltage condition (power surge). 2. Cycle main power OFF and back to ON, if normal operation does not resume. 3. If condition reoccurs, call STERIS.*
19. If unit is equipped with conveyor modules, alarm sounds, and display shows: **ALARM: UNLOAD** **CONVEYOR FULL** Printout message: ALARM: UNLOAD HH:MM:SS CONVEYOR FULL	1. Basket was to be indexed out of wash chamber to C3 conveyor, but unload modules (C3 and C4) are already full. 2. Press **ALARM REPLY** touch pad to silence alarm buzzer: a. Remove basket from C4 conveyor. b. Wait until next basket reaches C4 conveyor. c. When C3 conveyor is free of baskets, operation resumes automatically.
20. If unit is equipped with conveyor modules, alarm sounds, and display shows: **UNLOAD CHAMBER** **THEN CLOSE DOOR**	Basket remained in wash chamber or was not completely pulled out from wash chamber at the end of the unload sequence: 1. Press **ALARM REPLY** touch pad to silence alarm buzzer. 2. Position basket onto C3 conveyor. 3. Press **DOOR CLOSE** touch pad, operation resumes automatically.

**Service charges may be incurred. Consult your warranty for details.*

Questions? Contact FDA/CDRH/OCE/DID at CDRH-FOISTATUS@fda.hhs.gov or 301-796-8118

Records processed under FOIA Request 2011-7650; Released 1/25/12

Table 7-2. Troubleshooting Chart – Alarm Screen and/or Printout (Cont'd)

PROBLEM	POSSIBLE CAUSE AND CORRECTION
21. If unit is equipped with conveyor modules, alarm sounds, and display shows: **LOAD CHAMBER** **THEN CLOSE DOOR**	Photocell was obstructed at the end of the load sequence: 1. Press **ALARM REPLY** touch pad to silence alarm buzzer. 2. Push basket into chamber. 3. Press **DOOR CLOSE** touch pad. 4. When door is closed, press **CYCLE/START** touch pad to return to Cycle menu. 5. Select and start cycle. If condition reoccurs, call STERIS.*
22. If unit is equipped with conveyor modules, alarm sounds, and display shows: **LOAD CHAMBER** **THEN CLOSE DOOR**	Bar code tag was not read by bar code reader: 1. Press **ALARM REPLY** touch pad to silence alarm buzzer. 2. Verify bar code tag is legible and positioned on correct side of basket (refer to *SECTION 4.3*). 3. Push basket into chamber. 4. Press **DOOR CLOSE** touch pad. 5. When door is closed, press **CYCLE/START** touch pad to return to Cycle menu. 6. Select and start cycle. If condition reoccurs, call STERIS.*
23. If unit is equipped with conveyor modules, alarm sounds, and display shows: **E-STOP PRESSED** **PULL TO RESUME...** Printout message: EMERGENCY HH:MM:SS STOP PRESSED	One of the conveyor's **Emergency Stop** buttons was pressed. Press **ALARM REPLY** touch pad to silence alarm buzzer: 1. Pull out **Emergency Stop** pushbutton. 2. Reposition basket. 3. If **Emergency Stop** button was pressed while loading or unloading a basket, sequence is aborted. Refer to alarm 20 or 21 to resume operation.
24. For power doors, alarm sounds, and display shows: **ALARM:** **DOOR OBSTRUCTION** Printout message: ALARM: HH:MM:SS DOOR OBSTRUCTION	1. Door safety sensor detected an obstruction while load door was closing. a. Press **ALARM REPLY** touch pad to silence alarm buzzer. b. Clear obstruction. c. Press **DOOR CLOSE** touch pad. d. When door is closed, select and start cycle. 2. Door safety sensor detected an obstruction while unload door was closing. a. Press **ALARM REPLY** touch pad to silence alarm buzzer. b. Clear obstruction. c. Press **DOOR CLOSE** touch pad.

**Service charges may be incurred. Consult your warranty for details.*

Questions? Contact FDA/CDRH/OCE/DID at CDRH-FOISTATUS@fda.hhs.gov or 301-796-8118

Records processed under FOIA Request 2011-7650; Released 1/25/12

Table 7-2. Troubleshooting Chart – Alarm Screen and/or Printout (Cont'd)

PROBLEM	POSSIBLE CAUSE AND CORRECTION
25. If unit is equipped with conveyor modules, alarm sounds, and display shows: **ALARM:** **DOOR OBSTRUCTION** Printout message: ALARM: HH:MM:SS DOOR OBSTRUCTION	1. Door safety sensor detected an obstruction while load door was closing. a. Press **ALARM REPLY** touch pad, display shows: LOAD CHAMBER THEN CLOSE DOOR... b. Clear obstruction by pushing basket into wash chamber. c. Press **DOOR CLOSE** touch pad. d. When door is closed, press **CYCLE/START** touch pad to return to Cycle menu. e. Select and start cycle. 2. Door safety sensor detected an obstruction while unload door was closing. a. Press **ALARM REPLY** touch pad, display shows: UNLOAD CHAMBER THEN CLOSE DOOR... b. Clear obstruction by positioning basket onto C3 conveyor. c. Press **DOOR CLOSE** touch pad, operation resumes automatically.
26. If unit is equipped with conveyor modules, alarm sounds, and display shows: **REPOSITION BASKET!**	Basket is not properly positioned on conveyor: 1. Press **ALARM REPLY** touch pad to silence alarm buzzer. 2. Align back edge of basket (closest to operator) with arrow marked on conveyor.
27. If unit is equipped with conveyor modules, alarm sounds, and display shows: **LOAD DOOR ERROR!** Printout message: ALARM: HH:MM:SS LOAD DOOR ERROR!	Loading sequence took more than two minutes: 1. Press **ALARM REPLY** touch pad, display shows: LOAD CHAMBER THEN CLOSE DOOR 2. When door is closed, press **CYCLE/START** touch pad to select cycle. 3. Press **CYCLE START** touch pad to start cycle. If condition reoccurs, call STERIS.*

**Service charges may be incurred. Consult your warranty for details.*

Questions? Contact FDA/CDRH/OCE/DID at CDRH-FOISTATUS@fda.hhs.gov or 301-796-8118

Records processed under FOIA Request 2011-7650; Released 1/25/12

Table 7-2. Troubleshooting Chart – Alarm Screen and/or Printout (Cont'd)

PROBLEM	POSSIBLE CAUSE AND CORRECTION
28. If unit is equipped with conveyor modules, alarm sounds, and display shows: **UNLOAD DOOR ERROR!** Printout message: ALARM: HH:MM:SS UNLOAD DOOR ERROR!	Unloading sequence took more than two minutes: 1. Press **ALARM REPLY** touch pad, display shows: UNLOAD CHAMBER THEN CLOSE DOOR 2. Unload chamber. 3. Press **DOOR CLOSE** touch pad. If condition reoccurs, call STERIS.*

**Service charges may be incurred. Consult your warranty for details.*

Questions? Contact FDA/CDRH/OCE/DID at CDRH-FOISTATUS@fda.hhs.gov or 301-796-8118

Records processed under FOIA Request 2011-7650; Released 1/25/12

Healthcare
Capital Equipment

Questions? Contact FDA/CDRH/OCE/DID at CDRH-FOISTATUS@fda.hhs.gov or 301-796-8118

Records processed under FOIA Request 2011-7650; Released 1/25/12

REPLACEMENT PARTS AND PRODUCTS

8

IMPORTANT: *A listing of the Safety Precautions to be observed when operating and servicing this washer/disinfector can be found in SECTION 1 of this manual. Do not operate the equipment until you have become familiar with this information.*

WARNING–PERSONAL INJURY AND/OR EQUIPMENT DAMAGE HAZARD: Repairs and adjustments to this equipment must be made only by STERIS or STERIS-trained service personnel. Repairs and adjustments performed by unqualified personnel or installation of unauthorized parts could cause personal injury, result in improper equipment performance, void the warranty or result in costly damage. Contact STERIS regarding service options.

To order replacement parts and/or supply products, proceed as follows:

1. Include description and part/order number as listed in **Table 8-1**.
2. Include model and serial numbers of the unit on your order.
3. Send your order directly to STERIS.

Contact STERIS for recommendations on cleaning products or parts that are not listed below.

NOTE: Use only STERIS authorized parts on this equipment. Use of unauthorized parts will void the warranty.

Table 8-1. Replacement Parts

Description	Part Number
Consumables	
PAPER, Roll, Printer	P129359-008
LUBRICANT, Silicone For Squeeze Tubes	P117950-599
REFLECTOR, Fluorescent, Flow 16 W	P117906-132
Replacement Parts	
HOSE, C-Flecx, 1/4" ID x 1/2" OD (Sold by Foot)	P117952-345
HOSE, High-Flex, 1/4" ID X 1/2" OD, For Lubricant Use Only (Sold by Foot)	P117916-549
CHECK VALVE, Polypropylene, 1/4" Barbed	P117011-637
CHECK VALVE, Viton, For Lubricant Use Only	P117031-376
FOOT VALVE, Small, For Polyflow Tube 3/8"	P117908-973
BUSHING, Rotary Spray Arm, Bottom	P117988-267
HUB, Top, Without Spray Arm	P117916-193
LOCKING PIN, Spray Arm	P117914-825
HUB, Spray Header	P117035-822
ADAPTOR, Spray Header	P117035-823

Questions? Contact FDA/CDRH/OCE/DID at CDRH-FOISTATUS@fda.hhs.gov or 301-796-8118

Records processed under FOIA Request 2011-7650; Released 1/25/12

Table 8-1. Replacement Parts (Cont'd)

Description	Part Number
Replacement Parts (Cont'd)	
LOCKWASHER, Spray Header	P117035-824
FUSE, 4 Amp, 250 V	P117007-130
FUSE, 4 Amp, 600 V (For 380/400/415/480 V Option)	P117908-601
FUSE, 2.5 Amp, 600 V (For 600 V Option)	P117909-603
TUBING, Air, 5/32", Nylon, Red, 1A-201-05	P117902-322
TUBING, Air, 5/32", Nylon, Blue, 1A-201-07	P117902-323

Questions? Contact FDA/CDRH/OCE/DID at CDRH-FOISTATUS@fda.hhs.gov or 301-796-8118

Questions? Contact FDA/CDRH/OCE/DID at CDRH-FOISTATUS@fda.hhs.gov or 301-796-8118
DI - Page 1004 of 1276

Protect your STERIS equipment with cost-effective extended services agreements

The best way to prevent costly downtime due to equipment malfunction is with regularly scheduled maintenance performed by qualified technicians trained in the latest technology. STERIS offers annual maintenance agreements to give your capital equipment planned maintenance that will help correct little problems before they become big ones. STERIS Engineering Service combines the precise maintenance program and factory-trained technicians to assure you of maximum productivity.

Our STERIS service technicians thoroughly inspect, clean, adjust and provide all necessary maintenance to keep your equipment performing according to factory specifications, all at an established economical rate that you can plan for.

We have more than 5,000 Customers who are benefiting from STERIS maintenance agreements. Why not join them? Obtain complete details by calling 1-800-333-8828, or writing to:

STERIS®

STERIS Corporation
5960 Heisley Road
Mentor, OH 44060-1834 • USA
440-354-2600 • 800-JIT-4-USE (800-548-4873)

Records processed under FOIA Request 2011-7650; Released 1/25/12

(b)(4),Draft Version

(b)(4),Draft Version

(b)(4),Draft Version

(b)(4),Draft Version

(b)(4),Draft Version

(b)(4),Draft Version

(b)(4),Draft Version

(b)(4),Draft Version

(b)(4),Draft Version

(b)(4),Draft Version

(b)(4),Draft Version

(b)(4),Draft Version

(b)(4),Draft Version

(b)(4),Draft Version

(b)(4),Draft Version

(b)(4),Draft Version

(b)(4),Draft Version

Records processed under FOIA Request 2011-7650; Released 1/25/12

DEPARTMENT OF HEALTH & HUMAN SERVICES

Public Health Service

U.S. Food and Drug Administration
Center for Devices and Radiological Health
Document Mail Center ¿ WO66-G609
10903 New Hampshire Avenue
Silver Spring, MD 20993-0002

December 29, 2010

ACCLARENT, INC.
1525-B O'BRIEN DR.
MENLO PARK, CALIFORNIA 94025
UNITED STATES
ATTN: KERI YEN

510k Number: K100577

Product: ACCLARENT CYCLOPS

The additional information you have submitted has been received.

We will notify you when the processing of this submission has been completed or if any additional information is required. Pleaseremember that all correspondence concerning your submission MUST be sent to the Document Mail Center at the above letterhead address. Correspondence sent to any address other than the one above will not be considered as part of your official premarket notification submission. Also, please note the new Blue Book Memorandum regarding Fax and E-mail Policy entitled, "Fax and E-Mail Communication with Industry about Premarket Files Under Review. Please refer to this guidance for information on current fax and e-mail practices at http://www.fda.gov/MedicalDevices/DeviceRegulationandGuidance/GuidanceDocuments/ucm089402.htm. On August 12, 2005 CDRH issued the Guidance for Industry and FDA Staff: Format for Traditional and Abbreviated 510(k)s. This guidance can be found at http://www.fda.gov/MedicalDevices/DeviceRegulationandGuidance/GuidanceDocuments/ucm084365.htm. Please refer to this guidance for assistance on how to format an original submission for a Traditional or Abbreviated 510(k).

The Safe Medical Devices Act of 1990, signed on November 28, states that you may not place this device into commercial distribution until you receive a letter from FDA allowing you to do so. As in the past, we intend to complete our review as quickly as possible. Generally we do so in 90 days. However, the complexity of a submission or a requirement for additional information may occasionally cause the review to extend beyond 90 days. Thus, if you have not received a written decision or been contacted within 90 days of our receipt date you may want to check with FDA to determine the status of your submission.

Please ensure that whether you submit a 510(k) Summary as per 21 CFR 807.92, or a 510(k) Statement as per 21 CFR 807.93, it meets the content and format regulatory requirements.

If you have procedural questions, please contact the Division of Small Manufacturers International and Consumer Assistance (DSMICA) at (301)796-7100 or at their toll-free number (800)638-2041, or contact the 510k staff at (301)796-5640.

Sincerely,

510(k) Staff

Questions? Contact FDA/CDRH/OCE/DID at CDRH-FOISTATUS@fda.hhs.gov or 301-796-8118

120

Records processed under FOIA Request 2011-7650; Released 1/25/12

K100577/S3

Acclarent

K-19

December 23, 2010

Ms. Susan Rudy, MSN, CRNP, CORLN
Food and Drug Administration
Center for Devices and Radiological Health
Document Mail Center—WO66-G609
10903 New Hampshire Avenue
Silver Spring, MD 20993-0002

FDA CDRH DMC
DEC 27 2010
Received

RE: Response to K100577/S002 AI Letter: Acclarent Cyclops Multi-Angle Endoscope

Dear Ms. Rudy:

Acclarent received FDA's questions dated December 13, 2010 for the above referenced 510(k) submission and hereby submits two copies of our response.

Acclarent, Inc regards the contents of this submission to be proprietary commercial information entitled to the full confidentiality safeguards of 21 CFR Parts 20.45, 20.61 and 807.95(b).

If you have any questions regarding this submission, please do not hesitate to contact me by phone (650) 687-5874, fax (650) 687-4449 or by email at kyen@acclarent.com. Alternatively, you may contact Mike Handley by phone (650) 687-5424 or by email at mike.handley@acclarent.com. Thank you for your time and consideration.

Sincerely,

Keri Yen
Regulatory Affairs Manager

121

Questions? Contact FDA/CDRH/OCE/DID at CDRH-FOISTATUS@fda.hhs.gov or 301-796-8118

(b)(4),Testing Data

Records processed under FOIA Request 2011-7650; Released 1/25/12

Questions? Contact FDA/CDRH/OCE/DID at CDRH-FOISTATUS@fda.hhs.gov or 301-796-8118

(b)(4),Testing Data

Records processed under FOIA Request 2011-7650; Released 1/25/12

Questions? Contact FDA/CDRH/OCE/DID at CDRH-FOISTATUS@fda.hhs.gov or 301-796-8118

(b)(4),Testing Data

Records processed under FOIA Request 2011-7650; Released 1/25/12

Questions? Contact FDA/CDRH/OCE/DID at CDRH-FOISTATUS@fda.hhs.gov or 301-796-8118

(b)(4),Testing Data

Records processed under FOIA Request 2011-7650; Released 1/25/12

Questions? Contact FDA/CDRH/OCE/DID at CDRH-FOISTATUS@fda.hhs.gov or 301-796-8118

(b)(4),Testing Data

Records processed under FOIA Request 2011-7650; Released 1/25/12

Questions? Contact FDA/CDRH/OCE/DID at CDRH-FOISTATUS@fda.hhs.gov or 301-796-8118

(b)(4),Testing Data

Records processed under FOIA Request 2011-7650; Released 1/25/12

Questions? Contact FDA/CDRH/OCE/DID at CDRH-FOISTATUS@fda.hhs.gov or 301-796-8118

(b)(4),Testing Data

Records processed under FOIA Request 2011-7650; Released 1/25/12

Questions? Contact FDA/CDRH/OCE/DID at CDRH-FOISTATUS@fda.hhs.gov or 301-796-8118

(b)(4),Testing Data

Records processed under FOIA Request 2011-7650; Released 1/25/12

Questions? Contact FDA/CDRH/OCE/DID at CDRH-FOISTATUS@fda.hhs.gov or 301-796-8118

(b)(4),Testing Data

Records processed under FOIA Request 2011-7650; Released 1/25/12

Questions? Contact FDA/CDRH/OCE/DID at CDRH-FOISTATUS@fda.hhs.gov or 301-796-8118

(b)(4),Testing Data

Records processed under FOIA Request 2011-7650; Released 1/25/12

Questions? Contact FDA/CDRH/OCE/DID at CDRH-FOISTATUS@fda.hhs.gov or 301-796-8118

(b)(4),Testing Data

Records processed under FOIA Request 2011-7650; Released 1/25/12

Questions? Contact FDA/CDRH/OCE/DID at CDRH-FOISTATUS@fda.hhs.gov or 301-796-8118

(b)(4),Testing Data

Records processed under FOIA Request 2011-7650; Released 1/25/12

Questions? Contact FDA/CDRH/OCE/DID at CDRH-FOISTATUS@fda.hhs.gov or 301-796-8118

(b)(4),Testing Data

Records processed under FOIA Request 2011-7650; Released 1/25/12

Questions? Contact FDA/CDRH/OCE/DID at CDRH-FOISTATUS@fda.hhs.gov or 301-796-8118

(b)(4),Testing Data

Records processed under FOIA Request 2011-7650; Released 1/25/12

Questions? Contact FDA/CDRH/OCE/DID at CDRH-FOISTATUS@fda.hhs.gov or 301-796-8118

(b)(4),Testing Data

Records processed under FOIA Request 2011-7650; Released 1/25/12

Questions? Contact FDA/CDRH/OCE/DID at CDRH-FOISTATUS@fda.hhs.gov or 301-796-8118

(b)(4),Testing Data

Records processed under FOIA Request 2011-7650; Released 1/25/12

Questions? Contact FDA/CDRH/OCE/DID at CDRH-FOISTATUS@fda.hhs.gov or 301-796-8118

(b)(4),Testing Data

Records processed under FOIA Request 2011-7650; Released 1/25/12

Questions? Contact FDA/CDRH/OCE/DID at CDRH-FOISTATUS@fda.hhs.gov or 301-796-8118

(b)(4),Technical Information-CCI
Records processed under FOIA Request 2011-7650; Released 1/25/12

Questions? Contact FDA/CDRH/OCE/DID at CDRH-FOISTATUS@fda.hhs.gov or 301-796-8118

(b)(4),Technical Information-CCI
Records processed under FOIA Request 2011-7650; Released 1/25/12

Questions? Contact FDA/CDRH/OCE/DID at CDRH-FOISTATUS@fda.hhs.gov or 301-796-8118

(b)(4),Technical Information-CCI
Records processed under FOIA Request 2011-7650; Released 1/25/12

Questions? Contact FDA/CDRH/OCE/DID at CDRH-FOISTATUS@fda.hhs.gov or 301-796-8118

(b)(4),Technical Information-CCI
Records processed under FOIA Request 2011-7650; Released 1/25/12

Questions? Contact FDA/CDRH/OCE/DID at CDRH-FOISTATUS@fda.hhs.gov or 301-796-8118

(b)(4),Technical Information-CCI
Records processed under FOIA Request 2011-7650; Released 1/25/12

Questions? Contact FDA/CDRH/OCE/DID at CDRH-FOISTATUS@fda.hhs.gov or 301-796-8118

(b)(4),Technical Information-CCI
Records processed under FOIA Request 2011-7650; Released 1/25/12

Questions? Contact FDA/CDRH/OCE/DID at CDRH-FOISTATUS@fda.hhs.gov or 301-796-8118

(b)(4),Technical Information-CCI
Records processed under FOIA Request 2011-7650; Released 1/25/12

Questions? Contact FDA/CDRH/OCE/DID at CDRH-FOISTATUS@fda.hhs.gov or 301-796-8118

(b)(4),Technical Information-CCI
Records processed under FOIA Request 2011-7650; Released 1/25/12

Questions? Contact FDA/CDRH/OCE/DID at CDRH-FOISTATUS@fda.hhs.gov or 301-796-8118

(b)(4),Technical Information-CCI
Records processed under FOIA Request 2011-7650; Released 1/25/12

Questions? Contact FDA/CDRH/OCE/DID at CDRH-FOISTATUS@fda.hhs.gov or 301-796-8118

(b)(4),Technical Information-CCI
Records processed under FOIA Request 2011-7650; Released 1/25/12

Questions? Contact FDA/CDRH/OCE/DID at CDRH-FOISTATUS@fda.hhs.gov or 301-796-8118

(b)(4),Technical Information-CCI
Records processed under FOIA Request 2011-7650; Released 1/25/12

Questions? Contact FDA/CDRH/OCE/DID at CDRH-FOISTATUS@fda.hhs.gov or 301-796-8118

(b)(4),Technical Information-CCI
Records processed under FOIA Request 2011-7650; Released 1/25/12

Questions? Contact FDA/CDRH/OCE/DID at CDRH-FOISTATUS@fda.hhs.gov or 301-796-8118

(b)(4),Technical Information-CCI
Records processed under FOIA Request 2011-7650; Released 1/25/12

Questions? Contact FDA/CDRH/OCE/DID at CDRH-FOISTATUS@fda.hhs.gov or 301-796-8118

(b)(4),Technical Information-CCI
Records processed under FOIA Request 2011-7650; Released 1/25/12

Questions? Contact FDA/CDRH/OCE/DID at CDRH-FOISTATUS@fda.hhs.gov or 301-796-8118

(b)(4),Technical Information-CCI
Records processed under FOIA Request 2011-7650; Released 1/25/12

Questions? Contact FDA/CDRH/OCE/DID at CDRH-FOISTATUS@fda.hhs.gov or 301-796-8118

(b)(4),Technical Information-CCI
Records processed under FOIA Request 2011-7650; Released 1/25/12

Questions? Contact FDA/CDRH/OCE/DID at CDRH-FOISTATUS@fda.hhs.gov or 301-796-8118

(b)(4),Technical Information-CCI
Records processed under FOIA Request 2011-7650; Released 1/25/12

Questions? Contact FDA/CDRH/OCE/DID at CDRH-FOISTATUS@fda.hhs.gov or 301-796-8118

(b)(4),Technical Information-CCI
Records processed under FOIA Request 2011-7650; Released 1/25/12

Questions? Contact FDA/CDRH/OCE/DID at CDRH-FOISTATUS@fda.hhs.gov or 301-796-8118

(b)(4),Technical Information-CCI
Records processed under FOIA Request 2011-7650; Released 1/25/12

Questions? Contact FDA/CDRH/OCE/DID at CDRH-FOISTATUS@fda.hhs.gov or 301-796-8118

(b)(4),Technical Information-CCI
Records processed under FOIA Request 2011-7650; Released 1/25/12

Questions? Contact FDA/CDRH/OCE/DID at CDRH-FOISTATUS@fda.hhs.gov or 301-796-8118

(b)(4),Technical Information-CCI
Records processed under FOIA Request 2011-7650; Released 1/25/12

Questions? Contact FDA/CDRH/OCE/DID at CDRH-FOISTATUS@fda.hhs.gov or 301-796-8118

(b)(4),Technical Information-CCI
Records processed under FOIA Request 2011-7650; Released 1/25/12

Questions? Contact FDA/CDRH/OCE/DID at CDRH-FOISTATUS@fda.hhs.gov or 301-796-8118

(b)(4),Technical Information-CCI
Records processed under FOIA Request 2011-7650; Released 1/25/12

Questions? Contact FDA/CDRH/OCE/DID at CDRH-FOISTATUS@fda.hhs.gov or 301-796-8118

(b)(4),Technical Information-CCI
Records processed under FOIA Request 2011-7650; Released 1/25/12

Questions? Contact FDA/CDRH/OCE/DID at CDRH-FOISTATUS@fda.hhs.gov or 301-796-8118

(b)(4),Technical Information-CCI
Records processed under FOIA Request 2011-7650; Released 1/25/12

Questions? Contact FDA/CDRH/OCE/DID at CDRH-FOISTATUS@fda.hhs.gov or 301-796-8118

(b)(4),Technical Information-CCI
Records processed under FOIA Request 2011-7650; Released 1/25/12

Questions? Contact FDA/CDRH/OCE/DID at CDRH-FOISTATUS@fda.hhs.gov or 301-796-8118

(b)(4),Technical Information-CCI
Records processed under FOIA Request 2011-7650; Released 1/25/12

Questions? Contact FDA/CDRH/OCE/DID at CDRH-FOISTATUS@fda.hhs.gov or 301-796-8118

(b)(4),Technical Information-CCI
Records processed under FOIA Request 2011-7650; Released 1/25/12

Questions? Contact FDA/CDRH/OCE/DID at CDRH-FOISTATUS@fda.hhs.gov or 301-796-8118

(b)(4),Technical Information-CCI
Records processed under FOIA Request 2011-7650; Released 1/25/12

Questions? Contact FDA/CDRH/OCE/DID at CDRH-FOISTATUS@fda.hhs.gov or 301-796-8118

(b)(4),Technical Information-CCI
Records processed under FOIA Request 2011-7650; Released 1/25/12

Questions? Contact FDA/CDRH/OCE/DID at CDRH-FOISTATUS@fda.hhs.gov or 301-796-8118

(b)(4),(b)(5)

Records processed under FOIA Request 2011-7650; Released 1/25/12

Questions? Contact FDA/CDRH/OCE/DID at CDRH-FOISTATUS@fda.hhs.gov or 301-796-8118

(b)(4),(b)(5)

Records processed under FOIA Request 2011-7650; Released 1/25/12

Questions? Contact FDA/CDRH/OCE/DID at CDRH-FOISTATUS@fda.hhs.gov or 301-796-8118

(b)(4),(b)(5)

Records processed under FOIA Request 2011-7650; Released 1/25/12

Questions? Contact FDA/CDRH/OCE/DID at CDRH-FOISTATUS@fda.hhs.gov or 301-796-8118

(b)(4),(b)(5)

Records processed under FOIA Request 2011-7650; Released 1/25/12

Questions? Contact FDA/CDRH/OCE/DID at CDRH-FOISTATUS@fda.hhs.gov or 301-796-8118

(b)(4),(b)(5)

Records processed under FOIA Request 2011-7650; Released 1/25/12

Questions? Contact FDA/CDRH/OCE/DID at CDRH-FOISTATUS@fda.hhs.gov or 301-796-8118

(b)(4),(b)(5)

Records processed under FOIA Request 2011-7650; Released 1/25/12

Questions? Contact FDA/CDRH/OCE/DID at CDRH-FOISTATUS@fda.hhs.gov or 301-796-8118

(b)(4),(b)(5)

Records processed under FOIA Request 2011-7650; Released 1/25/12

Questions? Contact FDA/CDRH/OCE/DID at CDRH-FOISTATUS@fda.hhs.gov or 301-796-8118

(b)(4),(b)(5)

Records processed under FOIA Request 2011-7650; Released 1/25/12

Questions? Contact FDA/CDRH/OCE/DID at CDRH-FOISTATUS@fda.hhs.gov or 301-796-8118

(b)(4),(b)(5)

Records processed under FOIA Request 2011-7650; Released 1/25/12

Questions? Contact FDA/CDRH/OCE/DID at CDRH-FOISTATUS@fda.hhs.gov or 301-796-8118

(b)(4),(b)(5)

Records processed under FOIA Request 2011-7650; Released 1/25/12

Questions? Contact FDA/CDRH/OCE/DID at CDRH-FOISTATUS@fda.hhs.gov or 301-796-8118

(b)(4),(b)(5)

Records processed under FOIA Request 2011-7650; Released 1/25/12

Questions? Contact FDA/CDRH/OCE/DID at CDRH-FOISTATUS@fda.hhs.gov or 301-796-8118

(b)(4),(b)(5)

Records processed under FOIA Request 2011-7650; Released 1/25/12

Questions? Contact FDA/CDRH/OCE/DID at CDRH-FOISTATUS@fda.hhs.gov or 301-796-8118

(b)(4),(b)(5)

Records processed under FOIA Request 2011-7650; Released 1/25/12

Questions? Contact FDA/CDRH/OCE/DID at CDRH-FOISTATUS@fda.hhs.gov or 301-796-8118

(b)(4),(b)(5)

Records processed under FOIA Request 2011-7650; Released 1/25/12

Questions? Contact FDA/CDRH/OCE/DID at CDRH-FOISTATUS@fda.hhs.gov or 301-796-8118

(b)(4),(b)(5)

Records processed under FOIA Request 2011-7650; Released 1/25/12

Questions? Contact FDA/CDRH/OCE/DID at CDRH-FOISTATUS@fda.hhs.gov or 301-796-8118

(b)(4),(b)(5)

Records processed under FOIA Request 2011-7650; Released 1/25/12

Questions? Contact FDA/CDRH/OCE/DID at CDRH-FOISTATUS@fda.hhs.gov or 301-796-8118

(b)(4),(b)(5)

Records processed under FOIA Request 2011-7650; Released 1/25/12

Questions? Contact FDA/CDRH/OCE/DID at CDRH-FOISTATUS@fda.hhs.gov or 301-796-8118

(b)(4),(b)(5)

Records processed under FOIA Request 2011-7650; Released 1/25/12

Questions? Contact FDA/CDRH/OCE/DID at CDRH-FOISTATUS@fda.hhs.gov or 301-796-8118

(b)(4),(b)(5)

Records processed under FOIA Request 2011-7650; Released 1/25/12

Questions? Contact FDA/CDRH/OCE/DID at CDRH-FOISTATUS@fda.hhs.gov or 301-796-8118

(b)(4),(b)(5)

Records processed under FOIA Request 2011-7650; Released 1/25/12

Questions? Contact FDA/CDRH/OCE/DID at CDRH-FOISTATUS@fda.hhs.gov or 301-796-8118

(b)(4),(b)(5)

Records processed under FOIA Request 2011-7650; Released 1/25/12

Questions? Contact FDA/CDRH/OCE/DID at CDRH-FOISTATUS@fda.hhs.gov or 301-796-8118

(b)(4),(b)(5)

Records processed under FOIA Request 2011-7650; Released 1/25/12

Questions? Contact FDA/CDRH/OCE/DID at CDRH-FOISTATUS@fda.hhs.gov or 301-796-8118

(b)(4),(b)(5)

Records processed under FOIA Request 2011-7650; Released 1/25/12

Questions? Contact FDA/CDRH/OCE/DID at CDRH-FOISTATUS@fda.hhs.gov or 301-796-8118

(b)(4),(b)(5)

Records processed under FOIA Request 2011-7650; Released 1/25/12

Questions? Contact FDA/CDRH/OCE/DID at CDRH-FOISTATUS@fda.hhs.gov or 301-796-8118

(b)(4),(b)(5)

Records processed under FOIA Request 2011-7650; Released 1/25/12

Questions? Contact FDA/CDRH/OCE/DID at CDRH-FOISTATUS@fda.hhs.gov or 301-796-8118

(b)(4),(b)(5)

Records processed under FOIA Request 2011-7650; Released 1/25/12

Questions? Contact FDA/CDRH/OCE/DID at CDRH-FOISTATUS@fda.hhs.gov or 301-796-8118

(b)(4),(b)(5)

Records processed under FOIA Request 2011-7650; Released 1/25/12

Questions? Contact FDA/CDRH/OCE/DID at CDRH-FOISTATUS@fda.hhs.gov or 301-796-8118

(b)(4),(b)(5)

Records processed under FOIA Request 2011-7650; Released 1/25/12

Questions? Contact FDA/CDRH/OCE/DID at CDRH-FOISTATUS@fda.hhs.gov or 301-796-8118

(b)(4),(b)(5)

Records processed under FOIA Request 2011-7650; Released 1/25/12

Questions? Contact FDA/CDRH/OCE/DID at CDRH-FOISTATUS@fda.hhs.gov or 301-796-8118

(b)(4),(b)(5)

Records processed under FOIA Request 2011-7650; Released 1/25/12

Questions? Contact FDA/CDRH/OCE/DID at CDRH-FOISTATUS@fda.hhs.gov or 301-796-8118

(b)(4),(b)(5)

Records processed under FOIA Request 2011-7650; Released 1/25/12

Questions? Contact FDA/CDRH/OCE/DID at CDRH-FOISTATUS@fda.hhs.gov or 301-796-8118

(b)(4),(b)(5)

Records processed under FOIA Request 2011-7650; Released 1/25/12

Questions? Contact FDA/CDRH/OCE/DID at CDRH-FOISTATUS@fda.hhs.gov or 301-796-8118

(b)(4),(b)(5)

Records processed under FOIA Request 2011-7650; Released 1/25/12

Questions? Contact FDA/CDRH/OCE/DID at CDRH-FOISTATUS@fda.hhs.gov or 301-796-8118

(b)(4),(b)(5)

Records processed under FOIA Request 2011-7650; Released 1/25/12

Questions? Contact FDA/CDRH/OCE/DID at CDRH-FOISTATUS@fda.hhs.gov or 301-796-8118

(b)(4),(b)(5)

Records processed under FOIA Request 2011-7650; Released 1/25/12

Questions? Contact FDA/CDRH/OCE/DID at CDRH-FOISTATUS@fda.hhs.gov or 301-796-8118

(b)(4),(b)(5)

Records processed under FOIA Request 2011-7650; Released 1/25/12

Questions? Contact FDA/CDRH/OCE/DID at CDRH-FOISTATUS@fda.hhs.gov or 301-796-8118

(b)(4),(b)(5)

Records processed under FOIA Request 2011-7650; Released 1/25/12

Questions? Contact FDA/CDRH/OCE/DID at CDRH-FOISTATUS@fda.hhs.gov or 301-796-8118

(b)(4),(b)(5)

Records processed under FOIA Request 2011-7650; Released 1/25/12

Questions? Contact FDA/CDRH/OCE/DID at CDRH-FOISTATUS@fda.hhs.gov or 301-796-8118

(b)(4),(b)(5)

Records processed under FOIA Request 2011-7650; Released 1/25/12

Questions? Contact FDA/CDRH/OCE/DID at CDRH-FOISTATUS@fda.hhs.gov or 301-796-8118

(b)(4),(b)(5)

Records processed under FOIA Request 2011-7650; Released 1/25/12

Questions? Contact FDA/CDRH/OCE/DID at CDRH-FOISTATUS@fda.hhs.gov or 301-796-8118

(b)(4),(b)(5)

Records processed under FOIA Request 2011-7650; Released 1/25/12

Questions? Contact FDA/CDRH/OCE/DID at CDRH-FOISTATUS@fda.hhs.gov or 301-796-8118

(b)(4),(b)(5)

Records processed under FOIA Request 2011-7650; Released 1/25/12

Questions? Contact FDA/CDRH/OCE/DID at CDRH-FOISTATUS@fda.hhs.gov or 301-796-8118

(b)(4),(b)(5)

Records processed under FOIA Request 2011-7650; Released 1/25/12

Questions? Contact FDA/CDRH/OCE/DID at CDRH-FOISTATUS@fda.hhs.gov or 301-796-8118

(b)(4),(b)(5)

Records processed under FOIA Request 2011-7650; Released 1/25/12

Questions? Contact FDA/CDRH/OCE/DID at CDRH-FOISTATUS@fda.hhs.gov or 301-796-8118

(b)(4),(b)(5)

Records processed under FOIA Request 2011-7650; Released 1/25/12

Questions? Contact FDA/CDRH/OCE/DID at CDRH-FOISTATUS@fda.hhs.gov or 301-796-8118

(b)(4),(b)(5)

Records processed under FOIA Request 2011-7650; Released 1/25/12

Questions? Contact FDA/CDRH/OCE/DID at CDRH-FOISTATUS@fda.hhs.gov or 301-796-8118

(b)(4),(b)(5)

Records processed under FOIA Request 2011-7650; Released 1/25/12

Questions? Contact FDA/CDRH/OCE/DID at CDRH-FOISTATUS@fda.hhs.gov or 301-796-8118

(b)(4),(b)(5)

Records processed under FOIA Request 2011-7650; Released 1/25/12

Questions? Contact FDA/CDRH/OCE/DID at CDRH-FOISTATUS@fda.hhs.gov or 301-796-8118

(b)(4),(b)(5)

Records processed under FOIA Request 2011-7650; Released 1/25/12

Questions? Contact FDA/CDRH/OCE/DID at CDRH-FOISTATUS@fda.hhs.gov or 301-796-8118

(b)(4),(b)(5)

Records processed under FOIA Request 2011-7650; Released 1/25/12

Questions? Contact FDA/CDRH/OCE/DID at CDRH-FOISTATUS@fda.hhs.gov or 301-796-8118

(b)(4),(b)(5)

Records processed under FOIA Request 2011-7650; Released 1/25/12

Questions? Contact FDA/CDRH/OCE/DID at CDRH-FOISTATUS@fda.hhs.gov or 301-796-8118

(b)(4),(b)(5)

Records processed under FOIA Request 2011-7650; Released 1/25/12

Questions? Contact FDA/CDRH/OCE/DID at CDRH-FOISTATUS@fda.hhs.gov or 301-796-8118

(b)(4),(b)(5)

Records processed under FOIA Request 2011-7650; Released 1/25/12

Questions? Contact FDA/CDRH/OCE/DID at CDRH-FOISTATUS@fda.hhs.gov or 301-796-8118

(b)(4),(b)(5)

Records processed under FOIA Request 2011-7650; Released 1/25/12

Questions? Contact FDA/CDRH/OCE/DID at CDRH-FOISTATUS@fda.hhs.gov or 301-796-8118

(b)(4),(b)(5)

Records processed under FOIA Request 2011-7650; Released 1/25/12

Questions? Contact FDA/CDRH/OCE/DID at CDRH-FOISTATUS@fda.hhs.gov or 301-796-8118

(b)(4),(b)(5)

Records processed under FOIA Request 2011-7650; Released 1/25/12

Questions? Contact FDA/CDRH/OCE/DID at CDRH-FOISTATUS@fda.hhs.gov or 301-796-8118

(b)(4),(b)(5)

Records processed under FOIA Request 2011-7650; Released 1/25/12

Questions? Contact FDA/CDRH/OCE/DID at CDRH-FOISTATUS@fda.hhs.gov or 301-796-8118

(b)(4),(b)(5)

Records processed under FOIA Request 2011-7650; Released 1/25/12

Questions? Contact FDA/CDRH/OCE/DID at CDRH-FOISTATUS@fda.hhs.gov or 301-796-8118

(b)(4),(b)(5)

Records processed under FOIA Request 2011-7650; Released 1/25/12

Questions? Contact FDA/CDRH/OCE/DID at CDRH-FOISTATUS@fda.hhs.gov or 301-796-8118

(b)(4),(b)(5)

Records processed under FOIA Request 2011-7650; Released 1/25/12

Questions? Contact FDA/CDRH/OCE/DID at CDRH-FOISTATUS@fda.hhs.gov or 301-796-8118

(b)(4),(b)(5)

Records processed under FOIA Request 2011-7650; Released 1/25/12

Questions? Contact FDA/CDRH/OCE/DID at CDRH-FOISTATUS@fda.hhs.gov or 301-796-8118

(b)(4),(b)(5)

Records processed under FOIA Request 2011-7650; Released 1/25/12

Questions? Contact FDA/CDRH/OCE/DID at CDRH-FOISTATUS@fda.hhs.gov or 301-796-8118

(b)(4),(b)(5)

Records processed under FOIA Request 2011-7650; Released 1/25/12

Questions? Contact FDA/CDRH/OCE/DID at CDRH-FOISTATUS@fda.hhs.gov or 301-796-8118

(b)(4),(b)(5)

Records processed under FOIA Request 2011-7650; Released 1/25/12

Questions? Contact FDA/CDRH/OCE/DID at CDRH-FOISTATUS@fda.hhs.gov or 301-796-8118

(b)(4),(b)(5)

Records processed under FOIA Request 2011-7650; Released 1/25/12

Questions? Contact FDA/CDRH/OCE/DID at CDRH-FOISTATUS@fda.hhs.gov or 301-796-8118

(b)(4),(b)(5)

Records processed under FOIA Request 2011-7650; Released 1/25/12

Questions? Contact FDA/CDRH/OCE/DID at CDRH-FOISTATUS@fda.hhs.gov or 301-796-8118

(b)(4),Testing Data

Records processed under FOIA Request 2011-7650; Released 1/25/12

Questions? Contact FDA/CDRH/OCE/DID at CDRH-FOISTATUS@fda.hhs.gov or 301-796-8118

(b)(4),Testing Data

Records processed under FOIA Request 2011-7650; Released 1/25/12

Questions? Contact FDA/CDRH/OCE/DID at CDRH-FOISTATUS@fda.hhs.gov or 301-796-8118

(b)(4),Testing Data

Records processed under FOIA Request 2011-7650; Released 1/25/12

Questions? Contact FDA/CDRH/OCE/DID at CDRH-FOISTATUS@fda.hhs.gov or 301-796-8118

(b)(4),Testing Data

Records processed under FOIA Request 2011-7650; Released 1/25/12

Questions? Contact FDA/CDRH/OCE/DID at CDRH-FOISTATUS@fda.hhs.gov or 301-796-8118

(b)(4),Testing Data

Records processed under FOIA Request 2011-7650; Released 1/25/12

Questions? Contact FDA/CDRH/OCE/DID at CDRH-FOISTATUS@fda.hhs.gov or 301-796-8118

(b)(4),Testing Data

Records processed under FOIA Request 2011-7650; Released 1/25/12

Questions? Contact FDA/CDRH/OCE/DID at CDRH-FOISTATUS@fda.hhs.gov or 301-796-8118

(b)(4),Testing Data

Records processed under FOIA Request 2011-7650; Released 1/25/12

Questions? Contact FDA/CDRH/OCE/DID at CDRH-FOISTATUS@fda.hhs.gov or 301-796-8118

(b)(4),Testing Data

Records processed under FOIA Request 2011-7650; Released 1/25/12

Questions? Contact FDA/CDRH/OCE/DID at CDRH-FOISTATUS@fda.hhs.gov or 301-796-8118

(b)(4),Testing Data

Records processed under FOIA Request 2011-7650; Released 1/25/12

Questions? Contact FDA/CDRH/OCE/DID at CDRH-FOISTATUS@fda.hhs.gov or 301-796-8118

(b)(4),Testing Data

Records processed under FOIA Request 2011-7650; Released 1/25/12

Questions? Contact FDA/CDRH/OCE/DID at CDRH-FOISTATUS@fda.hhs.gov or 301-796-8118

(b)(4),Testing Data

Records processed under FOIA Request 2011-7650; Released 1/25/12

Questions? Contact FDA/CDRH/OCE/DID at CDRH-FOISTATUS@fda.hhs.gov or 301-796-8118

(b)(4),Testing Data

Records processed under FOIA Request 2011-7650; Released 1/25/12

Questions? Contact FDA/CDRH/OCE/DID at CDRH-FOISTATUS@fda.hhs.gov or 301-796-8118

(b)(4),Testing Data

Records processed under FOIA Request 2011-7650; Released 1/25/12

Questions? Contact FDA/CDRH/OCE/DID at CDRH-FOISTATUS@fda.hhs.gov or 301-796-8118

(b)(4),Testing Data

Records processed under FOIA Request 2011-7650; Released 1/25/12

Questions? Contact FDA/CDRH/OCE/DID at CDRH-FOISTATUS@fda.hhs.gov or 301-796-8118

(b)(4),Testing Data

Records processed under FOIA Request 2011-7650; Released 1/25/12

Questions? Contact FDA/CDRH/OCE/DID at CDRH-FOISTATUS@fda.hhs.gov or 301-796-8118

(b)(4),Testing Data

Records processed under FOIA Request 2011-7650; Released 1/25/12

Questions? Contact FDA/CDRH/OCE/DID at CDRH-FOISTATUS@fda.hhs.gov or 301-796-8118

(b)(4),Testing Data

Records processed under FOIA Request 2011-7650; Released 1/25/12

Questions? Contact FDA/CDRH/OCE/DID at CDRH-FOISTATUS@fda.hhs.gov or 301-796-8118

(b)(4),Testing Data

Records processed under FOIA Request 2011-7650; Released 1/25/12

Questions? Contact FDA/CDRH/OCE/DID at CDRH-FOISTATUS@fda.hhs.gov or 301-796-8118

(b)(4),Testing Data

Records processed under FOIA Request 2011-7650; Released 1/25/12

Questions? Contact FDA/CDRH/OCE/DID at CDRH-FOISTATUS@fda.hhs.gov or 301-796-8118

(b)(4),Testing Data

Records processed under FOIA Request 2011-7650; Released 1/25/12

Questions? Contact FDA/CDRH/OCE/DID at CDRH-FOISTATUS@fda.hhs.gov or 301-796-8118

(b)(4),Testing Data

Records processed under FOIA Request 2011-7650; Released 1/25/12

Questions? Contact FDA/CDRH/OCE/DID at CDRH-FOISTATUS@fda.hhs.gov or 301-796-8118

(b)(4),Testing Data

Records processed under FOIA Request 2011-7650; Released 1/25/12

Questions? Contact FDA/CDRH/OCE/DID at CDRH-FOISTATUS@fda.hhs.gov or 301-796-8118

(b)(4),Testing Data

Records processed under FOIA Request 2011-7650; Released 1/25/12

Questions? Contact FDA/CDRH/OCE/DID at CDRH-FOISTATUS@fda.hhs.gov or 301-796-8118

(b)(4),Testing Data

Records processed under FOIA Request 2011-7650; Released 1/25/12

Questions? Contact FDA/CDRH/OCE/DID at CDRH-FOISTATUS@fda.hhs.gov or 301-796-8118

(b)(4),Testing Data

Records processed under FOIA Request 2011-7650; Released 1/25/12

Questions? Contact FDA/CDRH/OCE/DID at CDRH-FOISTATUS@fda.hhs.gov or 301-796-8118

(b)(4),Testing Data

Records processed under FOIA Request 2011-7650; Released 1/25/12

Questions? Contact FDA/CDRH/OCE/DID at CDRH-FOISTATUS@fda.hhs.gov or 301-796-8118

(b)(4),Testing Data

Records processed under FOIA Request 2011-7650; Released 1/25/12

Questions? Contact FDA/CDRH/OCE/DID at CDRH-FOISTATUS@fda.hhs.gov or 301-796-8118

(b)(4),Testing Data

Records processed under FOIA Request 2011-7650; Released 1/25/12

Questions? Contact FDA/CDRH/OCE/DID at CDRH-FOISTATUS@fda.hhs.gov or 301-796-8118

(b)(4),Testing Data

Records processed under FOIA Request 2011-7650; Released 1/25/12

Questions? Contact FDA/CDRH/OCE/DID at CDRH-FOISTATUS@fda.hhs.gov or 301-796-8118

(b)(4),Testing Data

Records processed under FOIA Request 2011-7650; Released 1/25/12

Questions? Contact FDA/CDRH/OCE/DID at CDRH-FOISTATUS@fda.hhs.gov or 301-796-8118

(b)(4),Testing Data

Records processed under FOIA Request 2011-7650; Released 1/25/12

Questions? Contact FDA/CDRH/OCE/DID at CDRH-FOISTATUS@fda.hhs.gov or 301-796-8118

(b)(4),Testing Data

Records processed under FOIA Request 2011-7650; Released 1/25/12

Questions? Contact FDA/CDRH/OCE/DID at CDRH-FOISTATUS@fda.hhs.gov or 301-796-8118

(b)(4),Testing Data

Records processed under FOIA Request 2011-7650; Released 1/25/12

Questions? Contact FDA/CDRH/OCE/DID at CDRH-FOISTATUS@fda.hhs.gov or 301-796-8118

(b)(4),Testing Data

Records processed under FOIA Request 2011-7650; Released 1/25/12

Questions? Contact FDA/CDRH/OCE/DID at CDRH-FOISTATUS@fda.hhs.gov or 301-796-8118

(b)(4),Testing Data

Records processed under FOIA Request 2011-7650; Released 1/25/12

Questions? Contact FDA/CDRH/OCE/DID at CDRH-FOISTATUS@fda.hhs.gov or 301-796-8118

(b)(4),Testing Data

Records processed under FOIA Request 2011-7650; Released 1/25/12

Questions? Contact FDA/CDRH/OCE/DID at CDRH-FOISTATUS@fda.hhs.gov or 301-796-8118

(b)(4),Testing Data

Records processed under FOIA Request 2011-7650; Released 1/25/12

Questions? Contact FDA/CDRH/OCE/DID at CDRH-FOISTATUS@fda.hhs.gov or 301-796-8118

(b)(4),Testing Data

Records processed under FOIA Request 2011-7650; Released 1/25/12

Questions? Contact FDA/CDRH/OCE/DID at CDRH-FOISTATUS@fda.hhs.gov or 301-796-8118

(b)(4),Testing Data

Records processed under FOIA Request 2011-7650; Released 1/25/12

Questions? Contact FDA/CDRH/OCE/DID at CDRH-FOISTATUS@fda.hhs.gov or 301-796-8118

(b)(4),Testing Data

Records processed under FOIA Request 2011-7650; Released 1/25/12

Questions? Contact FDA/CDRH/OCE/DID at CDRH-FOISTATUS@fda.hhs.gov or 301-796-8118

(b)(4),Testing Data

Records processed under FOIA Request 2011-7650; Released 1/25/12

Questions? Contact FDA/CDRH/OCE/DID at CDRH-FOISTATUS@fda.hhs.gov or 301-796-8118

(b)(4),Testing Data

Records processed under FOIA Request 2011-7650; Released 1/25/12

Questions? Contact FDA/CDRH/OCE/DID at CDRH-FOISTATUS@fda.hhs.gov or 301-796-8118

(b)(4),Testing Data

Records processed under FOIA Request 2011-7650; Released 1/25/12

Questions? Contact FDA/CDRH/OCE/DID at CDRH-FOISTATUS@fda.hhs.gov or 301-796-8118

(b)(4),Testing Data

Records processed under FOIA Request 2011-7650; Released 1/25/12

Questions? Contact FDA/CDRH/OCE/DID at CDRH-FOISTATUS@fda.hhs.gov or 301-796-8118

(b)(4),Testing Data

Records processed under FOIA Request 2011-7650; Released 1/25/12

Questions? Contact FDA/CDRH/OCE/DID at CDRH-FOISTATUS@fda.hhs.gov or 301-796-8118

(b)(4),Testing Data

Records processed under FOIA Request 2011-7650; Released 1/25/12

Questions? Contact FDA/CDRH/OCE/DID at CDRH-FOISTATUS@fda.hhs.gov or 301-796-8118

(b)(4),Testing Data

Records processed under FOIA Request 2011-7650; Released 1/25/12

Questions? Contact FDA/CDRH/OCE/DID at CDRH-FOISTATUS@fda.hhs.gov or 301-796-8118

(b)(4),Testing Data

Records processed under FOIA Request 2011-7650; Released 1/25/12

Questions? Contact FDA/CDRH/OCE/DID at CDRH-FOISTATUS@fda.hhs.gov or 301-796-8118

(b)(4),Testing Data

Records processed under FOIA Request 2011-7650; Released 1/25/12

Questions? Contact FDA/CDRH/OCE/DID at CDRH-FOISTATUS@fda.hhs.gov or 301-796-8118

(b)(4),Testing Data

Records processed under FOIA Request 2011-7650; Released 1/25/12

Questions? Contact FDA/CDRH/OCE/DID at CDRH-FOISTATUS@fda.hhs.gov or 301-796-8118

(b)(4),Testing Data

Records processed under FOIA Request 2011-7650; Released 1/25/12

Questions? Contact FDA/CDRH/OCE/DID at CDRH-FOISTATUS@fda.hhs.gov or 301-796-8118

(b)(4),Testing Data

Records processed under FOIA Request 2011-7650; Released 1/25/12

Questions? Contact FDA/CDRH/OCE/DID at CDRH-FOISTATUS@fda.hhs.gov or 301-796-8118

(b)(4),Testing Data

Records processed under FOIA Request 2011-7650; Released 1/25/12

Questions? Contact FDA/CDRH/OCE/DID at CDRH-FOISTATUS@fda.hhs.gov or 301-796-8118

(b)(4),Testing Data

Records processed under FOIA Request 2011-7650; Released 1/25/12

Questions? Contact FDA/CDRH/OCE/DID at CDRH-FOISTATUS@fda.hhs.gov or 301-796-8118

(b)(4),Testing Data

Records processed under FOIA Request 2011-7650; Released 1/25/12

Questions? Contact FDA/CDRH/OCE/DID at CDRH-FOISTATUS@fda.hhs.gov or 301-796-8118

(b)(4),Testing Data

Records processed under FOIA Request 2011-7650; Released 1/25/12

Questions? Contact FDA/CDRH/OCE/DID at CDRH-FOISTATUS@fda.hhs.gov or 301-796-8118

(b)(4),Testing Data

Records processed under FOIA Request 2011-7650; Released 1/25/12

Questions? Contact FDA/CDRH/OCE/DID at CDRH-FOISTATUS@fda.hhs.gov or 301-796-8118

(b)(4),Testing Data

Records processed under FOIA Request 2011-7650; Released 1/25/12

Questions? Contact FDA/CDRH/OCE/DID at CDRH-FOISTATUS@fda.hhs.gov or 301-796-8118

(b)(4),Testing Data

Records processed under FOIA Request 2011-7650; Released 1/25/12

Questions? Contact FDA/CDRH/OCE/DID at CDRH-FOISTATUS@fda.hhs.gov or 301-796-8118

(b)(4),Testing Data

Records processed under FOIA Request 2011-7650; Released 1/25/12

Questions? Contact FDA/CDRH/OCE/DID at CDRH-FOISTATUS@fda.hhs.gov or 301-796-8118

(b)(4),Testing Data

Records processed under FOIA Request 2011-7650; Released 1/25/12

Questions? Contact FDA/CDRH/OCE/DID at CDRH-FOISTATUS@fda.hhs.gov or 301-796-8118

(b)(4),Testing Data

Records processed under FOIA Request 2011-7650; Released 1/25/12

Questions? Contact FDA/CDRH/OCE/DID at CDRH-FOISTATUS@fda.hhs.gov or 301-796-8118

(b)(4),Testing Data

Records processed under FOIA Request 2011-7650; Released 1/25/12

Questions? Contact FDA/CDRH/OCE/DID at CDRH-FOISTATUS@fda.hhs.gov or 301-796-8118

(b)(4),Testing Data

Records processed under FOIA Request 2011-7650; Released 1/25/12

Questions? Contact FDA/CDRH/OCE/DID at CDRH-FOISTATUS@fda.hhs.gov or 301-796-8118

(b)(4),Testing Data

Records processed under FOIA Request 2011-7650; Released 1/25/12

Questions? Contact FDA/CDRH/OCE/DID at CDRH-FOISTATUS@fda.hhs.gov or 301-796-8118

(b)(4),Testing Data

Records processed under FOIA Request 2011-7650; Released 1/25/12

Questions? Contact FDA/CDRH/OCE/DID at CDRH-FOISTATUS@fda.hhs.gov or 301-796-8118

(b)(4),Testing Data

Records processed under FOIA Request 2011-7650; Released 1/25/12

Questions? Contact FDA/CDRH/OCE/DID at CDRH-FOISTATUS@fda.hhs.gov or 301-796-8118

(b)(4),Testing Data

Records processed under FOIA Request 2011-7650; Released 1/25/12

Questions? Contact FDA/CDRH/OCE/DID at CDRH-FOISTATUS@fda.hhs.gov or 301-796-8118

(b)(4),Testing Data

Records processed under FOIA Request 2011-7650; Released 1/25/12

Questions? Contact FDA/CDRH/OCE/DID at CDRH-FOISTATUS@fda.hhs.gov or 301-796-8118

(b)(4),Testing Data

Records processed under FOIA Request 2011-7650; Released 1/25/12

Questions? Contact FDA/CDRH/OCE/DID at CDRH-FOISTATUS@fda.hhs.gov or 301-796-8118

(b)(4),Testing Data

Records processed under FOIA Request 2011-7650; Released 1/25/12

Questions? Contact FDA/CDRH/OCE/DID at CDRH-FOISTATUS@fda.hhs.gov or 301-796-8118

(b)(4),Testing Data

Records processed under FOIA Request 2011-7650; Released 1/25/12

Questions? Contact FDA/CDRH/OCE/DID at CDRH-FOISTATUS@fda.hhs.gov or 301-796-8118

(b)(4),Testing Data

Records processed under FOIA Request 2011-7650; Released 1/25/12

Questions? Contact FDA/CDRH/OCE/DID at CDRH-FOISTATUS@fda.hhs.gov or 301-796-8118

(b)(4),Testing Data

Records processed under FOIA Request 2011-7650; Released 1/25/12

Questions? Contact FDA/CDRH/OCE/DID at CDRH-FOISTATUS@fda.hhs.gov or 301-796-8118

(b)(4),Testing Data

Records processed under FOIA Request 2011-7650; Released 1/25/12

Questions? Contact FDA/CDRH/OCE/DID at CDRH-FOISTATUS@fda.hhs.gov or 301-796-8118

(b)(4),Testing Data

Records processed under FOIA Request 2011-7650; Released 1/25/12

Questions? Contact FDA/CDRH/OCE/DID at CDRH-FOISTATUS@fda.hhs.gov or 301-796-8118

(b)(4),Testing Data

Records processed under FOIA Request 2011-7650; Released 1/25/12

Questions? Contact FDA/CDRH/OCE/DID at CDRH-FOISTATUS@fda.hhs.gov or 301-796-8118

(b)(4),Testing Data

Records processed under FOIA Request 2011-7650; Released 1/25/12

Questions? Contact FDA/CDRH/OCE/DID at CDRH-FOISTATUS@fda.hhs.gov or 301-796-8118

(b)(4),Testing Data

Records processed under FOIA Request 2011-7650; Released 1/25/12

Questions? Contact FDA/CDRH/OCE/DID at CDRH-FOISTATUS@fda.hhs.gov or 301-796-8118

(b)(4),Testing Data

Records processed under FOIA Request 2011-7650; Released 1/25/12

Questions? Contact FDA/CDRH/OCE/DID at CDRH-FOISTATUS@fda.hhs.gov or 301-796-8118

(b)(4),Testing Data

Records processed under FOIA Request 2011-7650; Released 1/25/12

Questions? Contact FDA/CDRH/OCE/DID at CDRH-FOISTATUS@fda.hhs.gov or 301-796-8118

(b)(4),Testing Data

Records processed under FOIA Request 2011-7650; Released 1/25/12

Questions? Contact FDA/CDRH/OCE/DID at CDRH-FOISTATUS@fda.hhs.gov or 301-796-8118

(b)(4),Testing Data

Records processed under FOIA Request 2011-7650; Released 1/25/12

Questions? Contact FDA/CDRH/OCE/DID at CDRH-FOISTATUS@fda.hhs.gov or 301-796-8118

(b)(4),Testing Data

Records processed under FOIA Request 2011-7650; Released 1/25/12

Questions? Contact FDA/CDRH/OCE/DID at CDRH-FOISTATUS@fda.hhs.gov or 301-796-8118

(b)(4),Testing Data

Records processed under FOIA Request 2011-7650; Released 1/25/12

Questions? Contact FDA/CDRH/OCE/DID at CDRH-FOISTATUS@fda.hhs.gov or 301-796-8118

(b)(4),Testing Data

Records processed under FOIA Request 2011-7650; Released 1/25/12

Questions? Contact FDA/CDRH/OCE/DID at CDRH-FOISTATUS@fda.hhs.gov or 301-796-8118

(b)(4),Testing Data

Records processed under FOIA Request 2011-7650; Released 1/25/12

Questions? Contact FDA/CDRH/OCE/DID at CDRH-FOISTATUS@fda.hhs.gov or 301-796-8118

(b)(4),Testing Data

Records processed under FOIA Request 2011-7650; Released 1/25/12

Questions? Contact FDA/CDRH/OCE/DID at CDRH-FOISTATUS@fda.hhs.gov or 301-796-8118

(b)(4),Testing Data

Records processed under FOIA Request 2011-7650; Released 1/25/12

Questions? Contact FDA/CDRH/OCE/DID at CDRH-FOISTATUS@fda.hhs.gov or 301-796-8118

(b)(4),Testing Data

Records processed under FOIA Request 2011-7650; Released 1/25/12

Questions? Contact FDA/CDRH/OCE/DID at CDRH-FOISTATUS@fda.hhs.gov or 301-796-8118

(b)(4),Testing Data

Records processed under FOIA Request 2011-7650; Released 1/25/12

Questions? Contact FDA/CDRH/OCE/DID at CDRH-FOISTATUS@fda.hhs.gov or 301-796-8118

(b)(4),Testing Data

Records processed under FOIA Request 2011-7650; Released 1/25/12

Questions? Contact FDA/CDRH/OCE/DID at CDRH-FOISTATUS@fda.hhs.gov or 301-796-8118

(b)(4),Testing Data

Records processed under FOIA Request 2011-7650; Released 1/25/12

Questions? Contact FDA/CDRH/OCE/DID at CDRH-FOISTATUS@fda.hhs.gov or 301-796-8118

(b)(4),Testing Data

Records processed under FOIA Request 2011-7650; Released 1/25/12

Questions? Contact FDA/CDRH/OCE/DID at CDRH-FOISTATUS@fda.hhs.gov or 301-796-8118

(b)(4),Testing Data

Records processed under FOIA Request 2011-7650; Released 1/25/12

Questions? Contact FDA/CDRH/OCE/DID at CDRH-FOISTATUS@fda.hhs.gov or 301-796-8118

(b)(4),Testing Data

Records processed under FOIA Request 2011-7650; Released 1/25/12

Questions? Contact FDA/CDRH/OCE/DID at CDRH-FOISTATUS@fda.hhs.gov or 301-796-8118

(b)(4),Testing Data

Records processed under FOIA Request 2011-7650; Released 1/25/12

Questions? Contact FDA/CDRH/OCE/DID at CDRH-FOISTATUS@fda.hhs.gov or 301-796-8118

(b)(4),Testing Data

Records processed under FOIA Request 2011-7650; Released 1/25/12

Questions? Contact FDA/CDRH/OCE/DID at CDRH-FOISTATUS@fda.hhs.gov or 301-796-8118

(b)(4),Testing Data

Records processed under FOIA Request 2011-7650; Released 1/25/12

Questions? Contact FDA/CDRH/OCE/DID at CDRH-FOISTATUS@fda.hhs.gov or 301-796-8118

(b)(4),Testing Data

Records processed under FOIA Request 2011-7650; Released 1/25/12

Questions? Contact FDA/CDRH/OCE/DID at CDRH-FOISTATUS@fda.hhs.gov or 301-796-8118

(b)(4),Testing Data

Records processed under FOIA Request 2011-7650; Released 1/25/12

Questions? Contact FDA/CDRH/OCE/DID at CDRH-FOISTATUS@fda.hhs.gov or 301-796-8118

(b)(4),Testing Data

Records processed under FOIA Request 2011-7650; Released 1/25/12

Questions? Contact FDA/CDRH/OCE/DID at CDRH-FOISTATUS@fda.hhs.gov or 301-796-8118

(b)(4),Testing Data

Records processed under FOIA Request 2011-7650; Released 1/25/12

Questions? Contact FDA/CDRH/OCE/DID at CDRH-FOISTATUS@fda.hhs.gov or 301-796-8118

(b)(4),Testing Data

Records processed under FOIA Request 2011-7650; Released 1/25/12

Questions? Contact FDA/CDRH/OCE/DID at CDRH-FOISTATUS@fda.hhs.gov or 301-796-8118

(b)(4),Testing Data

Records processed under FOIA Request 2011-7650; Released 1/25/12

Questions? Contact FDA/CDRH/OCE/DID at CDRH-FOISTATUS@fda.hhs.gov or 301-796-8118

(b)(4),Testing Data

Records processed under FOIA Request 2011-7650; Released 1/25/12

Questions? Contact FDA/CDRH/OCE/DID at CDRH-FOISTATUS@fda.hhs.gov or 301-796-8118

(b)(4)

(b)(4)

(b)(4)

Copyrighted Material

Copyrighted Material

Copyrighted Material

Copyrighted Material

Copyrighted Material

Copyrighted Material

Copyrighted Material

Copyrighted Material

Copyrighted Material

Copyrighted Material

(b)(4)

(b)(4)

Copyrighted Material

Copyrighted Material

Copyrighted Material

Copyrighted Material

Copyrighted Material

Copyrighted Material

Copyrighted Material

Copyrighted Material

Copyrighted Material

Copyrighted Material

Copyrighted Material

Copyrighted Material

Copyrighted Material

Copyrighted Material

Copyrighted Material

Copyrighted Material

Copyrighted Material

Copyrighted Material

Copyrighted Material

Copyrighted Material

Copyrighted Material

Copyrighted Material

Copyrighted Material

Copyrighted Material