U.S. Department of Health & Human Services

Food and Drug Administration

FOIA RESPONSE

USER:	(ixg)
FOLDER:	K051002 - 119 pages (FOI:20106766)
COMPANY:	ETHICON ENDO-SURGERY, INC. (ETHIENDOSURG)
PRODUCT:	STAPLE, IMPLANTABLE (GDW)
SUMMARY:	Product: ENDOPATH ENDOCUTTER 60 ENDOSCOPIC LINEAR CUTTER
DATE REQUESTED:	Mar 25, 2011
DATE PRINTED:	Apr 4, 2011

Note: Releasable Version

510(k) Summary

Company Ethicon Endo-Surgery, Inc.
4545 Creek Road
Cincinnati, OH 45242

Contact Georgia C. Abernathy, MBA, RAC
Senior Regulatory Affairs Associate
Telephone: (513) 337-3179
Fax: (513) 337-1444
Email: gabernat@eesus.jnj.com

Date Prepared April 19, 2005

Device Name Trade Name: ENDOPATH® Endocutter 60 Endoscopic Linear Cutter
Common or Usual Name: Linear Cutter
Classification Name: Endoscope and Accessories and Implantable Staples [21 CFR 876.1500 (KOG) and 21 CFR 878.4750 (GDW)]

Predicate Device ENDOPATH® Linear Cutters and Staplers

Device Description These instruments are all mechanical surgical stapling devices. The ENDOPATH Endocutter 60 Endoscopic Linear Cutter models are sterile, single patient use instruments that deliver staples while simultaneously dividing tissue between rows. These instruments may be used in either open or endoscopic procedures. The devices will be available in three shaft lengths: standard, compact and long, and will be furnished without a cartridge. Cartridges for the Endocutter 60 devices will be available in sizes that correspond to the thickness of tissue that is to be transected or resected: white (vascular/thin), blue (standard), gold (thick, less dense) and green (thick).

Indications for Use The ENDOPATH Endocutter 60 Endoscopic Linear Cutter is intended for transection, resection, and/or creation of anastomoses. The instrument has application in multiple open or minimally invasive general, gynecologic, urologic, thoracic, and pediatric surgical procedures. It can be used with staple line or tissue buttressing materials.

Technological Characteristics The device incorporates a new 60mm cartridge design; new enhanced compression system; rigid anvil and E-beam with robust, one-piece design; wide jaw aperture for easy tissue positioning and manipulating; and ergonomic features for one-handed use (ability to clamp, fire and release with automatic knife return). The ENDOPATH Endocutter 60 device will be available in three shaft lengths: standard, compact and long. Compatible cartridges come in four sizes to accommodate various tissue thicknesses. The gold cartridge is an additional size added to the product line. The gold cartridge staple wire diameter is identical to the existing blue cartridge staple wire diameter, with a longer staple leg length for thicker indicated tissue.

Performance Data Bench testing and preclinical laboratory evaluations were performed to demonstrate that the device will perform as intended.

DEPARTMENT OF HEALTH & HUMAN SERVICES

Public Health Service

Food and Drug Administration
9200 Corporate Boulevard
Rockville MD 20850

MAY 17 2005

Ms. Georgia C. Abernathy, MBA, RAC
Senior Regulatory Affairs Associate
Ethicon Endo-Surgery Incorporated
4545 Creek Road
Cincinnati, Ohio 45242-2839

Re: K051002
Trade/Device Name: ENDOPATH® Endocutter60 Endoscopic Linear Cutter
Regulation Number: 21 CFR 878.4750
Regulation Name: Implantable staple
Regulatory Class: II
Product Code: GDW
Dated: April 19, 2005
Received: April 20, 2005

Dear Ms. Abernathy:

We have reviewed your Section 510(k) premarket notification of intent to market the device referenced above and have determined the device is substantially equivalent (for the indications for use stated in the enclosure) to legally marketed predicate devices marketed in interstate commerce prior to May 28, 1976, the enactment date of the Medical Device Amendments, or to devices that have been reclassified in accordance with the provisions of the Federal Food, Drug, and Cosmetic Act (Act) that do not require approval of a premarket approval application (PMA). You may, therefore, market the device, subject to the general controls provisions of the Act. The general controls provisions of the Act include requirements for annual registration, listing of devices, good manufacturing practice, labeling, and prohibitions against misbranding and adulteration.

If your device is classified (see above) into either class II (Special Controls) or class III (PMA), it may be subject to such additional controls. Existing major regulations affecting your device can be found in the Code of Federal Regulations, Title 21, Parts 800 to 898. In addition, FDA may publish further announcements concerning your device in the Federal Register.

Please be advised that FDA's issuance of a substantial equivalence determination does not mean that FDA has made a determination that your device complies with other requirements of the Act or any Federal statutes and regulations administered by other Federal agencies. You must comply with all the Act's requirements, including, but not limited to: registration and listing (21 CFR Part 807); labeling (21 CFR Part 801); good manufacturing practice requirements as set forth in the quality systems (QS) regulation (21 CFR Part 820); and if applicable, the electronic product radiation control provisions (Sections 531-542 of the Act); 21 CFR 1000-1050.

This letter will allow you to begin marketing your device as described in your Section 510(k) premarket notification. The FDA finding of substantial equivalence of your device to a legally marketed predicate device results in a classification for your device and thus, permits your device to proceed to the market.

If you desire specific advice for your device on our labeling regulation (21 CFR Part 801), please contact the Office of Compliance at (240) 276-0115 . Also, please note the regulation entitled, "Misbranding by reference to premarket notification" (21CFR Part 807.97). You may obtain other general information on your responsibilities under the Act from the Division of Small Manufacturers, International and Consumer Assistance at its toll-free number (800) 638-2041 or (301) 443-6597 or at its Internet address http://www.fda.gov/cdrh/industry/support/index.html.

Sincerely yours,

Miriam C. Provost, Ph.D.
Acting Director
Division of General, Restorative
and Neurological Devices
Office of Device Evaluation
Center for Devices and
Radiological Health

Enclosure

K05/002

Indications for Use

510(k) Number (if known): _____

Device Name: **ENDOPATH® Endocutter 60 Endoscopic Linear Cutter**

Indications for Use:

The ENDOPATH Endocutter 60 Endoscopic Linear Cutter is intended for transection, resection, and/or creation of anastomoses. The instrument has application in multiple open or minimally invasive general, gynecologic, urologic, thoracic, and pediatric surgical procedures. It can be used with staple line or tissue buttressing materials.

Prescription Use ___X___ (Part 21 CFR 801 Subpart D)	AND/OR	Over-The-Counter Use _____ (21 CFR 801 Subpart C)

(PLEASE DO NOT WRITE BELOW THIS LINE - CONTINUE ON ANOTHER PAGE IF NEEDED)

Concurrence of CDRH, Office of Device Evaluation (ODE)

(Posted November 13, 2003)

K051002

Document Cover Sheet:

Date of Submission:	19-APR-2005
Description:	ENDOPATH ENDOCUTTER 60 ENDOSCOPIC LINEAR CUTTER
Date of Scan:	31-MAY-2005
Document Prep:	ZXV4 5-31-05
Scanner:	ZXV4 6-1-05
Image Quality Reviewer:	HLS 6/22/05

K051002-K5309

FSR0601-000

- - 1 3 4 7 9 5 M A Y 3 1 0 9 0 5 5 2

Document Expected	Page # Start	Page # End	Page In Doc	Indexer
Decision Letter 17-MAY-2005	1	2	3	✓
Indications for Use 17-MAY-2005	3	3	2	✓
Reviewer Memorandum 16-MAY-2005	4	4	2	✓
510K Decision Tree	5	5	2	✓
Reviewer Notes 05-MAY-2005	6	12	8	✓
Acknowledgement Letter 20-APR-2005	13	15	4	✓
Original 19-APR-2005	16	111	97	✓
Cover Letter 19-APR-2005	16	16	2	✓
Contents 19-APR-2005	17	111	96	✓
Total documents: 7				
Total document pages: 111				✓
Total separator pages: 8				
Total Scan pages: 120				

Document Cover Sheet:

Document Expected	Page # Start	Page # End	Page In Doc	Indexer

QC Signature

OBA 06/22/05

QC Bar Code Sticker

Document Cover Sheet:

Date of Submission:	19-APR-2005
Description:	ENDOPATH ENDOCUTTER 60 ENDOSCOPIC LINEAR CUTTER
Date of Scan:	31-MAY-2005
Document Prep:	ZXV4 5-31-05
Scanner:	
Image Quality Reviewer:	

K051002-K5309

FSR0601-000

- - 1 3 4 7 9 5 M A Y 3 1 0 9 0 5 5 2

Document Expected	Page # Start	Page # End	Page In Doc	Indexer
Decision Letter 17-MAY-2005	1	2	3	
Indications for Use 17-MAY-2005	3	3	2	
Reviewer Memorandum 16-MAY-2005	4	4	2	
510K Decision Tree	5	5	2	
Reviewer Notes 05-MAY-2005	6	12	8	
Acknowledgement Letter 20-APR-2005	13	15	4	
Original 19-APR-2005	16	111	97	
Cover Letter 19-APR-2005	16	16	2	
Contents 19-APR-2005	17	111	96	
Total documents: 7				
Total document pages: 111				
Total separator pages: 8				
Total Scan pages: 120				

Document Cover Sheet:

Document Expected	Page # Start	Page # End	Page In Doc	Indexer

QC Signature

QC Bar Code Sticker

DEPARTMENT OF HEALTH & HUMAN SERVICES

Public Health Service

Food and Drug Administration
9200 Corporate Boulevard
Rockville MD 20850

MAY 17 2005

Ms. Georgia C. Abernathy, MBA, RAC
Senior Regulatory Affairs Associate
Ethicon Endo-Surgery Incorporated
4545 Creek Road
Cincinnati, Ohio 45242-2839

Re: K051002
Trade/Device Name: ENDOPATH® Endocutter60 Endoscopic Linear Cutter
Regulation Number: 21 CFR 878.4750
Regulation Name: Implantable staple
Regulatory Class: II
Product Code: GDW
Dated: April 19, 2005
Received: April 20, 2005

Dear Ms. Abernathy:

We have reviewed your Section 510(k) premarket notification of intent to market the device referenced above and have determined the device is substantially equivalent (for the indications for use stated in the enclosure) to legally marketed predicate devices marketed in interstate commerce prior to May 28, 1976, the enactment date of the Medical Device Amendments, or to devices that have been reclassified in accordance with the provisions of the Federal Food, Drug, and Cosmetic Act (Act) that do not require approval of a premarket approval application (PMA). You may, therefore, market the device, subject to the general controls provisions of the Act. The general controls provisions of the Act include requirements for annual registration, listing of devices, good manufacturing practice, labeling, and prohibitions against misbranding and adulteration.

If your device is classified (see above) into either class II (Special Controls) or class III (PMA), it may be subject to such additional controls. Existing major regulations affecting your device can be found in the Code of Federal Regulations, Title 21, Parts 800 to 898. In addition, FDA may publish further announcements concerning your device in the Federal Register.

Please be advised that FDA's issuance of a substantial equivalence determination does not mean that FDA has made a determination that your device complies with other requirements of the Act or any Federal statutes and regulations administered by other Federal agencies. You must comply with all the Act's requirements, including, but not limited to: registration and listing (21 CFR Part 807); labeling (21 CFR Part 801); good manufacturing practice requirements as set forth in the quality systems (QS) regulation (21 CFR Part 820); and if applicable, the electronic product radiation control provisions (Sections 531-542 of the Act); 21 CFR 1000-1050.

This letter will allow you to begin marketing your device as described in your Section 510(k) premarket notification. The FDA finding of substantial equivalence of your device to a legally marketed predicate device results in a classification for your device and thus, permits your device to proceed to the market.

If you desire specific advice for your device on our labeling regulation (21 CFR Part 801), please contact the Office of Compliance at (240) 276-0115 . Also, please note the regulation entitled, "Misbranding by reference to premarket notification" (21CFR Part 807.97). You may obtain other general information on your responsibilities under the Act from the Division of Small Manufacturers, International and Consumer Assistance at its toll-free number (800) 638-2041 or (301) 443-6597 or at its Internet address http://www.fda.gov/cdrh/industry/support/index.html.

Sincerely yours,

Miriam C. Provost, Ph.D.
Acting Director
Division of General, Restorative
and Neurological Devices
Office of Device Evaluation
Center for Devices and
Radiological Health

Enclosure

K05/002

Indications for Use

510(k) Number (if known): _____

Device Name: **ENDOPATH® Endocutter 60 Endoscopic Linear Cutter**

Indications for Use:

The ENDOPATH Endocutter 60 Endoscopic Linear Cutter is intended for transection, resection, and/or creation of anastomoses. The instrument has application in multiple open or minimally invasive general, gynecologic, urologic, thoracic, and pediatric surgical procedures. It can be used with staple line or tissue buttressing materials.

Prescription Use ___X___ (Part 21 CFR 801 Subpart D)	AND/OR	Over-The-Counter Use _____ (21 CFR 801 Subpart C)

(PLEASE DO NOT WRITE BELOW THIS LINE - CONTINUE ON ANOTHER PAGE IF NEEDED)

Concurrence of CDRH, Office of Device Evaluation (ODE)

(Posted November 13, 2003)

K051002

3

Food and Drug Administration
Center for Devices and
Radiological Health
Office of Device Evaluation
Document Mail Center (HFZ-401)
9200 Corporate Blvd.
Rockville, Maryland 20850

April 25, 2005

ETHICON ENDO-SURGERY, INC.
4545 CREEK RD.
CINCINNATI, OH 45242
ATTN: GEORGIA C. ABERNATHY

510(k) Number: K051002
Received: 22-APR-2005
Product: ENDOPATH ENDOCUTTER 60 ENDOSCOPIC LINEAR CUTTER

The Food and Drug Administration (FDA), Center for Devices and Radiological Health (CDRH), has received the Premarket Notification you submitted in accordance with Section 510(k) of the Federal Food, Drug, and Cosmetic Act(Act) for the above referenced product. We have assigned your submission a unique 510(k) number that is cited above. Please refer prominently to this 510(k) number in any future correspondence that relates to this submission. We will notify you when the processing of your premarket notification has been completed or if any additional information is required. YOU MAY NOT PLACE THIS DEVICE INTO COMMERCIAL DISTRIBUTION UNTIL YOU RECEIVE A LETTER FROM FDA ALLOWING YOU TO DO SO.

On May 21, 2004, FDA issued a Guidance for Industry and FDA Staff entitled, "FDA and Industry Actions on Premarket Notification (510(k)) Submissions: Effect on FDA Review Clock and Performance Assessment". The purpose of this document is to assist agency staff and the device industry in understanding how various FDA and industry actions that may be taken on 510(k)s should affect the review clock for purposes of meeting the Medical Device User Fee and Modernization Act. Please review this document at http://www.fda.gov/cdrh/mdufma/guidance/1219.html.

Please remember that all correspondence concerning your submission MUST be sent to the Document Mail Center (DMC)(HFZ-401) at the above letterhead address. Correspondence sent to any address other than the one above will not be considered as part of your official premarket notification submission. Also, please note the new Blue Book Memorandum regarding Fax and E-mail Policy entitled, "Fax and E-Mail Communication with Industry about Premarket Files Under Review". Please refer to this guidance for information on current fax and e-mail practices at www.fda.gov/cdrh/ode/a02-01.html.

You should be familiar with the regulatory requirements for medical device available at Device Advice http://www.fda.gov/cdrh/devadvice/". If you have other procedural or policy questions, or want information on how to check on the status of your submission, please contact DSMICA at (301) 443-6597 or its toll-free number (800) 638-2041, or at their Internet address http://www.fda.gov/cdrh/dsmamain.html or me at (301)594-1190.

Sincerely yours,

Marjorie Shulman
Supervisory Consumer Safety Officer
Office of Device Evaluation
Center for Devices and Radiological Health

13

Food and Drug Administration
Center for Devices and
Radiological Health
Office of Device Evaluation
Document Mail Center (HFZ-401)
9200 Corporate Blvd.
Rockville, Maryland 20850

April 20, 2005

ETHICON ENDO-SURGERY, INC.
4545 CREEK RD.
CINCINNATI, OH 45242
ATTN: GEORGIA C. ABERNATHY

510(k) Number: K051002
Received: 20-APR-2005
Product: ENDOPATH ENDOCUTTER
User Fee ID Number: 6020057C LINEAR CUTTER

The Food and Drug Administration (FDA) Center for Devices and Radiological Health (CDRH), has received the Premarket Notification you submitted in accordance with Section 510(k) of the Federal Food, Drug, and Cosmetic Act (Act) for the above referenced product. We have assigned your submission a unique 510(k) number that is cited above. Please refer prominently to this 510(k) number in any future correspondence that relates to this submission. YOU MAY NOT PLACE THIS DEVICE INTO COMMERCIAL DISTRIBUTION UNTIL YOU RECEIVE A LETTER FROM FDA ALLOWING YOU TO DO SO.

The Act, as amended by the Medical Device User Fee and Modernization Act of 2002 (MDUFMA) (Public Law 107-250), specifies that a submission shall be considered incomplete and shall not be accepted for filing until fees have been paid (Section 738(f)). Our records indicate that you have not submitted the user fee payment information and therefore your 510(k) cannot be filed and has been placed on hold. Please send a check to one of the addresses listed below:

By Regular Mail	By Private Courier (e.g., Fed Ex, UPS, etc.)
Food and Drug Administration P.O. Box 956733 St. Louis, MO 63195-6733.	U.S. Bank 956733 1005 Convention Plaza St. Louis, MO 63101 (314) 418-4983

The check should be made out to the Food and Drug Administration referencing the payment identification number, and a copy of the User Fee Cover sheet should be included with the check. A copy of the Medical Device User Fee Cover Sheet should be faxed to CDRH at (301) 594-2977 referencing the 510(k) number if you have not already sent it in with your 510(k) submission. After the FDA has been notified of the receipt of your user fee payment, your 510(k) will be filed and the review will begin. If payment has not been received within 30 days, your 510(k) will be deleted from the system. Additional information on user fees and how to submit your user fee payment may be found at http://www.fda.gov/oc/mdufma.

Please note that since your 510(k) has not been reviewed, additional information may be required during the review process and the file may be placed on hold once again. If you are unsure as to whether or not you need to file an application with FDA or what type of application to file, you should first telephone the Division of Small Manufacturers, International and Consumer Assistance (DSMICA), for guidance at (301)443-6597 or its toll-fee number (800)638-2041, or contact them at their Internet address http://www.fda.gov/cdrh/dsmamain.html, or you may submit a 513(g) request to the Document Mail Center at the address above. If you have any questions concerning the contents of this letter, you may contact me at (301) 594-1190.

Sincerely yours,

Marjorie Shulman
Consumer Safety Officer
Office of Device Evaluation
Center for Devices and
Radiological Health

K051002

ETHICON ENDO-SURGERY, INC.
a Johnson & Johnson company

4545 CREEK ROAD
CINCINNATI, OH 45242 2839

April 19, 2005

Food and Drug Administration
Center for Devices and Radiological Health
Office of Device Evaluation
Division of General and Plastic Surgery Devices
Document Mail Center (HFZ-401)
9200 Corporate Boulevard
Rockville, MD 20850

Re: **Traditional 510(k) Premarket Notification**
ENDOPATH® Endocutter 60 Endoscopic Linear Cutters - Straight

Dear Sir or Madam:

Pursuant to 21 CFR 807.90, Ethicon Endo-Surgery is submitting two copies of this 510(k) notification for **ENDOPATH Endocutter 60 Endoscopic Linear Cutters** and two copies of this cover letter. This Premarket Notification is being submitted as notification of Ethicon Endo-Surgery's intent to introduce modifications of the currently marketed ENDOPATH Linear Cutters and Cartridges (Reloads) product family (cleared June 5, 2002 under K020779), to be called **ENDOPATH Endocutter 60 Endoscopic Linear Cutters**.

A unique payment identification number (PIN) has been assigned to this submission: (b)(4) A copy of the Medical Device User Fee Cover Sheet has been included in Section A for your reference.

All information necessary for a substantial equivalence determination is included herein. If you have any questions about this notification, please contact me at (513) 337-3179 (or fax (513) 337-1444), or contact Linda Hill, Group Manager, Regulatory Affairs at (513) 337-7623.

Sincerely,

Georgia C. Abernathy

Georgia C. Abernathy, MBA, RAC
Senior Regulatory Affairs Associate

Enclosure

16
SE-2
SU
II

Table of Contents

Cover Letter 1

Table of Contents 2

Section A Medical Device User Fee Cover Sheet 3

Section B CDRH Premarket Review Submission Cover Sheet 4

Section C Screening Checklist for All Premarket Notification [510(k)] Submissions 10

Section D Statement of Indications for Use* 15

Section E 510(k) Summary* 17

Section F Truthful and Accurate Statement 19

Section G Device Description 21
- Device Design and Principles of Operation 21
- Purpose of this Premarket Notification 24
- Indications for Use 25
- Regulatory History of the Device 25

Section H Device Materials and Biocompatibility 26

Section I Performance Testing and Animal Studies 30
- Performance Testing 30
- Animal Studies 34

Section J Sterilization and Packaging 43

Section K Statement of Substantial Equivalence 44
- Section K-1: SE Decision Making Process Decision Tree 46
- Section K-2: Side-by-Side Comparison Table 48

Section L Draft Product Labeling 51

Section M Marketed Device Labeling 58

* An extra copy in a plastic sleeve is included for reviewer convenience.

Section A
Medical Device User Fee Cover Sheet

The Medical Device User Fee Cover Sheet for the proposed device is provided on the following pages.

Form Approved: OMB No. 0910-511 Expiration Date: August 31, 2005. See Instructions for OMB Statement.

DEPARTMENT OF HEALTH AND HUMAN SERVICES
FOOD AND DRUG ADMINISTRATION
MEDICAL DEVICE USER FEE COVER SHEET

PAYMENT IDENTIFICATION NUMBER: (b)(4)
Write the Payment Identification number on your check.

A completed Cover Sheet must accompany each original application or supplement subject to fees. The following actions must be taken to properly submit your application and fee payment:

1. Electronically submits the completed Cover Sheet to the Food and Drug Administration (FDA) before payment is sent.
2. Include printed copy of this completed Cover Sheet with a check made payable to the Food and Drug Administration. Remember that the Payment Identification Number must be written on the check.
3. Mail Check and Cover Sheet to the US Bank Lock Box, FDA Account, P.O. Box 956733, St. Louise, MO 63195-6733. (*Note: In no case should payment be submitted with the application.*)
4. If you prefer to send a check by a courier, the courier may deliver the check and Cover Sheet to: US Bank, Attn: Government Lockbox 956733, 1005 Convention Plaza, St. Louis, MO 63101. (Note: This address is for courier delivery only. Contact the US Bank at 314-418-4821 if you have any questions concerning courier delivery.)
5. For Wire Transfer Payment Procedures, please refer to the MDUFMA Fee Payment Instructions at the following URL: http://www.fda.gov/cdrh/mdufma/faqs.html#3a. You are responsible for paying all fees associated with wire transfer.
6. Include a copy of the complete Cover Sheet in volume one of the application when submitting to the FDA at either the CBER or CDRH Document Mail Center.

-->

1. COMPANY NAME AND ADDRESS (include name, street address, city state, country, and post office code)

ETHICON ENDO SURGERY INC
4545 Creek Road ML #23
Cincinnati OH 45242
US

1.1 EMPLOYER IDENTIFICATION NUMBER (EIN)
(b)(4)

2. CONTACT NAME
Georgia Abernathy

2.1 E-MAIL ADDRESS
gabernat@eesus.jnj.com

2.2 TELEPHONE NUMBER (include Area code)
513-337-3179

2.3 FACSIMILE (FAX) NUMBER (Include Area code)
513-337-3179

3. TYPE OF PREMARKET APPLICATION (Select one of the following in each column; if you are unsure, please refer to the application descriptions at the following web site: http://www.fda.gov/dc/mdufma

Select an application type:
[X] Premarket notification(510(k)); except for third party
[ ] Biologics License Application (BLA)
[ ] Premarket Approval Application (PMA)
[ ] Modular PMA
[ ] Product Development Protocol (PDP)
[ ] Premarket Report (PMR)

3.1 Select one of the types below
[X] Original Application
Supplement Types:
[ ] Efficacy (BLA)
[ ] Panel Track (PMA, PMR, PDP)
[ ] Real-Time (PMA, PMR, PDP)
[ ] 180-day (PMA, PMR, PDP)

4. ARE YOU A SMALL BUSINESS? (See the instructions for more information on determining this status)
[ ] YES, I meet the small business criteria and have submitted the required qualifying documents to FDA
[X] NO, I am not a small business
4.1 If Yes, please enter your Small Business Decision Number: null

5. IS THIS PREMARKET APPLICATION COVERED BY ANY OF THE FOLLOWING USER FEE EXCEPTIONS? IF SO, CHECK THE APPLICABLE EXCEPTION.
[ ] This application is the first PMA submitted by a qualified small business, including any affiliates, parents, and partner firms
[ ] This biologics application is submitted under secion 351 of the Public Health Service Act for a product licensed for further manufacturing use only
[ ] The sole purpose of the application is to support conditions of use for a pediatric population
[ ] The application is submitted by a state or federal government entity for a device that is not to be distributed commercially

6. IS THIS A SUPPLEMENT TO A PREMARKET APPLICATION FOR WHICH FEES WERE WAIVED DUE TO SOLE USE IN A PEDIATRIC POPULATION THAT NOW PROPOSES CONDITION OF USE FOR ANY ADULT POPULATION? (If so, the application is subject to the fee that applies for an original premarket approval application (PMA).)
[ ] YES [X] NO

7. USER FEE PAYMENT AMOUNT SUBMITTED FOR THIS PREMARKET APPLICATION (FOR FISCAL YEAR 2005)
(b)(4)

07-Mar-2005

19

Section B
CDRH Premarket Review Submission Cover Sheet

The CDRH Premarket Review Submission Cover Sheet for the proposed device is provided on the following pages.

DEPARTMENT OF HEALTH AND HUMAN SERVICES
FOOD AND DRUG ADMINISTRATION

CDRH PREMARKET REVIEW SUBMISSION COVER SHEET

Form Approval
OMB No. 9010-0120
Expiration Date: May 31, 2007.
See OMB Statement on page 5.

Date of Submission	User Fee Payment ID Number	FDA Submission Document Number *(if known)*
April 19, 2005	**MD6020057-956733**	

SECTION A — **TYPE OF SUBMISSION**

PMA	PMA & HDE Supplement	PDP	510(k)	Meeting
☐ Original Submission ☐ Premarket Report ☐ Modular Submission ☐ Amendment ☐ Report ☐ Report Amendment ☐ Licensing Agreement	☐ Regular (120 day) ☐ Special ☐ Panel Track (PMA Only) ☐ 30-day Supplement ☐ 30-day Notice ☐ 135-day Supplement ☐ Real-time Review ☐ Amendment to PMA & HDE Supplement ☐ Other	☐ Original PDP ☐ Notice of Completion ☐ Amendment to PDP	☑ Original Submission: ☑ Traditional ☐ Special ☐ Abbreviated (Complete section I, Page 5) ☐ Additional Information ☐ Third Party	☐ Pre-510(k) Meeting ☐ Pre-IDE Meeting ☐ Pre-PMA Meeting ☐ Pre-PDP Meeting ☐ Day 100 Meeting ☐ Agreement Meeting ☐ Determination Meeting ☐ Other *(specify)*:

IDE	Humanitarian Device Exemption (HDE)	Class II Exemption Petition	Evaluation of Automatic Class III Designation (De Novo)	Other Submission
☐ Original Submission ☐ Amendment ☐ Supplement	☐ Original Submission ☐ Amendment ☐ Supplement ☐ Report ☐ Report Amendment	☐ Original Submission ☐ Additional Information	☐ Original Submission ☐ Additional Information	☐ 513(g) ☐ Other *(describe submission)*:

Have you used or cited Standards in your submission? ☐ Yes ☐ No *(If Yes, please complete Section I, Page 5)*

SECTION B — **SUBMITTER, APPLICANT OR SPONSOR**

Company / Institution Name **Ethicon Endo-Surgery, Inc.**	Establishment Registration Number *(if known)* **1527736**		
Division Name *(if applicable)*	Phone Number *(including area code)* **513-337-3179**		
Street Address **4545 Creek Road**	FAX Number *(including area code)* **513-337-1444**		
City **Cincinnati**	State / Province **OH**	ZIP / Postal Code **45242**	Country **USA**
Contact Name **Georgia C. Abernathy, MBA, RAC**			
Contact Title **Senior Regulatory Affairs Associate**	Contact E-mail Address **gabernat@eesus.jnj.com**		

SECTION C — **APPLICATION CORRESPONDENT (e.g., consultant, if different from above)**

Company / Institution Name	Establishment Registration Number *(if known)*		
Division Name *(if applicable)*	Phone Number *(including area code)*		
Street Address	FAX Number *(including area code)*		
City	State / Province	ZIP / Postal Code	Country
Contact Name			
Contact Title	Contact E-mail Address		

FORM FDA 3514 (6/04) PAGE 1 OF 5 PAGES

SECTION D1 — REASON FOR APPLICATION - PMA, PDP, or HDE

- ☐ Withdrawal
- ☐ Additional or Expanded Indications
- ☐ Request for Extension
- ☐ Post-Approval Study Protocol
- ☐ Request for Applicant Hold
- ☐ Request for Removal of Applicant Hold
- ☐ Request to Remove or Add Manufacturing Site

- ☐ Change in Design, Component, or Specification:
  - ☐ Software / Hardware
  - ☐ Color Additive
  - ☐ Material
  - ☐ Specifications
  - ☐ Other *(specify below)*

- ☐ Location Change:
  - ☐ Manufacturer
  - ☐ Sterilizer
  - ☐ Packager

- ☐ Process Change:
  - ☐ Manufacturing
  - ☐ Sterilization
  - ☐ Packaging
  - ☐ Other *(specify below)*

- ☐ Labeling Change:
  - ☐ Indications
  - ☐ Instructions
  - ☐ Performance
  - ☐ Shelf life
  - ☐ Trade name
  - ☐ Other *(specify below)*

- ☐ Report submission:
  - ☐ Annual or Periodic
  - ☐ Post-Approval Study
  - ☐ Adverse Reaction
  - ☐ Device Defect
  - ☐ Amendment

- ☐ Response to FDA Correspondence:

- ☐ Change in Ownership
- ☐ Change in Correspondent
- ☐ Change of Applicant Address

☐ Other Reason *(specify)*:

SECTION D2 — REASON FOR APPLICATION – IDE

- ☐ New Device
- ☐ New Indication
- ☐ Addition of Institution
- ☐ Expansion / Extension of Study
- ☐ IRB Certification
- ☐ Termination of Study
- ☐ Withdrawal of Application
- ☐ Unanticipated Adverse Effect
- ☐ Notification of Emergency Use
- ☐ Compassionate Use Request
- ☐ Treatment IDE
- ☐ Continued Access

- ☐ Change in:
  - ☐ Correspondent / Applicant
  - ☐ Design / Device
  - ☐ Informed Consent
  - ☐ Manufacturer
  - ☐ Manufacturer Process
  - ☐ Protocol – Feasibility
  - ☐ Protocol – Other
  - ☐ Sponsor

- ☐ Report submission:
  - ☐ Current Investigator
  - ☐ Annual Progress Report
  - ☐ Site Waiver Report
  - ☐ Final

- ☐ Response to FDA Letter Concerning:
  - ☐ Conditional Approval
  - ☐ Deemed Approved
  - ☐ Deficient Final Report
  - ☐ Deficient Progress Report
  - ☐ Deficient Investigator Report
  - ☐ Disapproval
  - ☐ Request Extension of Time to Respond to FDA
  - ☐ Request Meeting
  - ☐ Request Hearing

☐ Other reason (specify):

SECTION D3 — REASON FOR SUBMISSION – 510(k)

- ☑ New Device
- ☐ Additional or Expanded Indications
- ☐ Change in Technology

☐ Other Reason *(specify)*:

Addition to the existing product line of a straight 60mm linear cutter for laparoscopic or open procedures and corresponding 60mm cartridges, including a cartridge with modified staple leg length and cartridge color for use on thick, less dense tissue. Labeling revisions to product insert Indications (for clarity) and Contraindications section (for tissue compression range associated with the new staple dimensions).

FORM FDA 3514 (6/04) PAGE 2 OF 5 PAGES

SECTION E **ADDITIONAL INFORMATION ON 510(k) SUBMISSIONS**

Product codes of devices to which substantial equivalence is claimed

1	GDW	2	KOG	3		4	
5		6		7		8	

Summary of, or statement concerning, safety and effectiveness information
☑ 510(k) summary attached
☐ 510(k) statement

Information on devices to which substantial equivalence is claimed *(if known)*

	510(k) Number		*Trade or Proprietary or Model Name*		*Manufacturer*
1	K020779	1	ENDOPATH & PROXIMATE Linear Cutters & Staplers	1	Ethicon Endo-Surgery, Inc.
2	K002398	2	ENDOPATH ETS45 Linear Cutters, Staplers & Reloads Product Family	2	Ethicon Endo-Surgery, Inc.
3	K961390	3	ENDOPATH ETS Endoscopic Linear Cutter and ETS-Flex Endoscopic /Articulating Linear Cutter Devices	3	Ethicon Endo-Surgery, Inc.
4		4		4	
5		5		5	
6		6		6	

SECTION F **PRODUCT INFORMATION – APPLICATION TO ALL APPLICATIONS**

Common or usual name or classification
Endoscope and Accessories (KOG) and Implantable staple (GDW)

	Trade or Proprietary or Model Name for This Device		Model number
1	ENDOPATH Endocutter 60 Endoscopic Linear Cutter	1	EC60, SC60, LONG60, Cartridges: ECR60W, ECR60B, ECR60D, ECR60G
2		2	
3		3	
4		4	
5		5	

FDA document numbers of all prior related submissions *(regardless of outcome)*

1 K020779	2 K002398	3 K970720	4 K961390	5 K951546	6 K935064
7 K843034	8	9	10	11	12

Data Included in Submission

☑ Laboratory testing ☑ Animal trials ☐ Human trials

SECTION G **PRODUCT CLASSIFICATION – APPLICATION TO ALL APPLICATIONS**

Product Code	C.F.R. Section *(if applicable)*	Device class
KOG, GDW	21 CFR 876.1500; 21 CFR 878.4750	☐ Class I ☑ Class II
Classification Panel: General and Plastic Surgery		☐ Class III ☐ Unclassified

Indications *(from labeling)*

The ENDOPATH Endocutter 60 Endoscopic Linear Cutter is intended for transection, resection, and/or creation of anastomoses. The instrument has application in multiple open or minimally invasive general, gynecologic, urologic, thoracic, and pediatric surgical procedures. It can be used with staple line or tissue buttressing materials.

FORM FDA 3514 (6/04) PAGE 3 OF 5 PAGES

Note: Submission of this information does not affect the need to submit a 2891 or 2891a Device Establishment Registration form.	FDA Document Number *(if known)*

SECTION H MANUFACTURING / PACKAGING / STERILIZATION SITES RELATING TO A SUBMISSION

☑ Original ☐ Add ☐ Delete	FDA Establishment Registration Number **1527736**	☑ Manufacturer ☐ Contract Manufacturer	☐ Contract sterilizer ☐ Repackage / Relabeler	
Company / Institution Name **Ethicon Endo-Surgery, Inc.**		Establishment Registration Number **1527736**		
Division Name *(if applicable)* **N/A**		Phone Number *(including area code)* (b)(4)		
Street Address **4545 Creek Road**		FAX Number *(including area code)* (b)(4)		
City **Cincinnati**		State / Province **OH**	ZIP / Postal Code **45242**	**Country USA**
Contact Name (b)(4)	Contact Title (b)(4)		Contact e-mail address (b)(4)	

☑ Original ☐ Add ☐ Delete	FDA Establishment Registration Number **1628808**	☑ Manufacturer ☐ Contract Manufacturer	☐ Contract sterilizer ☐ Repackage / Relabeler	
Company / Institution Name **Ethicon Endo-Surgery, Inc.**		Establishment Registration Number **1628808**		
Division Name *(if applicable)* **N/A**		Phone Number *(including area code)* (b)(4)		
Street Address **3801 University Blvd., S.E.**		FAX Number *(including area code)*		
City **Albuquerque**		State / Province **NM**	ZIP / Postal Code **87106**	**Country USA**
Contact Name (b)(4)	Contact Title (b)(4)		Contact e-mail address (b)(4)	

☑ Original ☐ Add ☐ Delete	FDA Establishment Registration Number **9681530**	☑ Manufacturer ☐ Contract Manufacturer	☐ Contract sterilizer ☐ Repackage / Relabeler	
Company / Institution Name **Ethicon Endo-Surgery, Inc. S.A. de C.V. Planta I**		Establishment Registration Number **9681530**		
Division Name *(if applicable)* **N/A**		Phone Number *(including area code)* (b)(4)		
Street Address **Ave. de Las Torres 7125, Col. Salvarcar**		FAX Number *(including area code)* (b)(4)		
City **Ciudad Juarez**		State / Province **Chihuahua**	ZIP / Postal Code	**Country Mexico**
Contact Name (b)(4)	Contact Title (b)(4)		Contact e-mail address (b)(4)	

FORM FDA 3514 (6/04) PAGE 4 OF 5 PAGES

SECTION I **UTILIZATION OF STANDARDS**

Note: Complete this section if your application or submission cites standards or includes a *"Declaration of Conformity to a Recognized Standard"* statement.

1	Standards No.	Standards Organization	Standards Title	Version	Date
2	Standards No.	Standards Organization	Standards Title	Version	Date
3	Standards No.	Standards Organization	Standards Title	Version	Date
4	Standards No.	Standards Organization	Standards Title	Version	Date
5	Standards No.	Standards Organization	Standards Title	Version	Date
6	Standards No.	Standards Organization	Standards Title	Version	Date
7	Standards No.	Standards Organization	Standards Title	Version	Date

Please include any additional standards to be cited on a separate page.

Public reporting burden for this collection of information is estimated to average 0.5 hour per response, including the time for reviewing instructions, searching existing data sources, gathering and maintaining the data needed, and completing reviewing the collection of information. Send comments regarding this burden estimate or any other aspect of this collection of information, including suggestions for reducing this burden to:

Food and Drug Administration
CDRH (HFZ - 342)
9200 Corporate Blvd.
Rockville, MD 20850

An agency may not conduct or sponsor, and a person is not required to respond to, a collection of information unless it displays a currently valid OMB control

FORM FDA 3514 (6/04) PAGE 5 OF 5 PAGES

Section C
Screening Checklist
For All Premarket Notification [510(k)] Submissions

The Screening Checklist for all Premarket Notification [510(k)] Submissions for the proposed device is provided on the following pages.

Screening Checklist
For All Premarket Notification [510(k)] Submissions

510(k) Number: _____

The cover letter clearly identifies the type of 510(k) submission as **(Check the appropriate box)**:

- ☐ Special 510(k) - Do Sections 1 and 2
- ☐ Abbreviated 510(k) - Do Sections 1, 3 and 4
- ☑ Traditional 510(k) or no identification provided - Do Sections 1 and 4

Section 1: Required Elements for All Types of 510(k) submissions:

	Present or Adequate	Missing or Inadequate
Cover letter, containing the elements listed on page 3-2 of the Premarket Notification [510)] Manual.	Page 1	
Table of Contents.	Page 2	
Truthful and Accurate Statement.	Section F	
Device's Trade Name, Device's Classification Name and Establishment Registration Number.	Section B	
Device Classification Regulation Number and Regulatory Status (Class I, Class II, Class III or Unclassified).	Section B	
Proposed Labeling including the material listed on page 3-4 of the Premarket Notification [510)] Manual.	Section L	
Statement of Indications for Use that is on a separate page in the premarket submission.	Section D	
Substantial Equivalence Comparison, including comparisons of the new device with the predicate in areas that are listed on page 3-4 of the Premarket Notification [510)] Manual.	Section K	
510(k) Summary or 510(k) Statement.	Section E	
Description of the device (or modification of the device) including diagrams, engineering drawings, photographs or service manuals.	Section G	
Identification of legally marketed predicate device. *	Section B	
Compliance with performance standards. * [See Section 514 of the Act and 21 CFR 807.87 (d).]	Section I	
Class III Certification and Summary. **	N/A[1]	
Financial Certification or Disclosure Statement for 510(k) notifications with a clinical study. * [See 21 CFR 807.87 (i)]	N/A[1]	
510(k) Kit Certification ***	N/A[1]	

* - May not be applicable for Special 510(k)s.
** - Required for Class III devices, only.
*** - See pages 3-12 and 3-13 in the Premarket Notification [510)] Manual and the Convenience Kits Interim Regulatory Guidance.
[1] - N/A = Not Applicable

Section 2: Required Elements for a SPECIAL 510(k) submission:

	Present	Inadequate or Missing
Name and 510(k) number of the submitter's own, unmodified predicate device.		
A description of the modified device and a comparison to the sponsor's predicate device.		
A statement that the intended use(s) and indications of the modified device, as described in its labeling, are the same as the intended uses and indications for the sponsor's unmodified predicate device.		
Reviewer's confirmation that the modification has not altered the fundamental scientific technology of the submitter's predicate device.		
A Design Control Activities Summary that includes the following elements (a-c):		
a. Identification of Risk Analysis method(s) used to assess the impact of the modification on the device and its components, and the results of the analysis.		
b. Based on the Risk Analysis, an identification of the required verification and validation activities, including the methods or tests used and the acceptance criteria to be applied.		
c. A Declaration of Conformity with design controls that includes the following statements:		
A statement that, as required by the risk analysis, all verification and validation activities were performed by the designated individual(s) and the results of the activities demonstrated that the predetermined acceptance criteria were met. This statement is signed by the individual responsible for those particular activities.		
A statement that the manufacturing facility is in conformance with the design control procedure requirements as specified in 21 CFR 820.30 and the records are available for review. This statement is signed by the individual responsible for those particular activities.		

Section 3: Required Elements for an ABBREVIATED 510(k)* submission:

	Present	Inadequate or Missing
For a submission, which relies on a guidance document and/or special control(s), a summary report that describes how the guidance and/or special control(s) was used to address the risks associated with the particular device type. (If a manufacturer elects to use an alternate approach to address a particular risk, sufficient detail should be provided to justify that approach.)		
For a submission, which relies on a recognized standard, a declaration of conformity [For a listing of the required elements of a declaration of conformity, see Required Elements for a Declaration of Conformity to a Recognized Standard, which is posted with the 510(k) boilers on the H drive.]		
For a submission, which relies on a recognized standard without a declaration of conformity, a statement that the manufacturer intends to conform to a recognized standard and that supporting data will be available before marketing the device.		
For a submission, which relies on a non-recognized standard that has been historically accepted by FDA, a statement that the manufacturer intends to conform to a recognized standard and that supporting data will be available before marketing the device.		
For a submission, which relies on a non-recognized standard that has <u>not</u> been historically accepted by FDA, a statement that the manufacturer intends to conform to a recognized standard and that supporting data will be available before marketing the device <u>and</u> any additional information requested by the reviewer in order to determine substantial equivalence.		
Any additional information, which is not covered by the guidance document, special control, recognized standard and/or non-recognized standard, in order to determine substantial equivalence.		

* - When completing the review of an abbreviated 510(k), please fill out an Abbreviated Standards Data Form (located on the H drive) and list all the guidance documents, special controls, recognized standards and/or non-recognized standards, which were noted by the sponsor.

Section 4: Additional Requirements for ABBREVIATED and TRADITIONAL 510(k) submissions (If Applicable):

	Present	Inadequate or Missing
a) Biocompatibility data for all patient-contacting materials, OR certification of identical material/formulation:	Section H	
b) Sterilization and expiration dating information:	Section J	
i) sterilization process	Section J	
ii) validation method of sterilization process	Section J	
iii) SAL	Section J	
iv) packaging	Section J	
v) specify pyrogen free	N/A[1]	
vi) EtO residues	N/A[1]	
vii) radiation dose	Section J	
viii) Traditional Method or Non-Traditional Method	Section J	
c) Software Documentation:	N/A[1]	

Items with checks in the "Present or Adequate" column do not require additional information from the sponsor. Items with checks in the "Missing or Inadequate" column must be submitted before substantive review of the document.

Passed Screening _____Yes _____No
Reviewer:_____
Concurrence by Review Branch:_____
Date:_____

The deficiencies identified above represent the issues that we believe need to be resolved before our review of your 510(k) submission can be successfully completed. In developing the deficiencies, we carefully considered the statutory criteria as defined in Section 513(i) of the Federal Food, Drug, and Cosmetic Act for determining substantial equivalence of your device. We also considered the burden that may be incurred in your attempt to respond to the deficiencies. We believe that we have considered the least burdensome approach to resolving these issues. If, however, you believe that information is being requested that is not relevant to the regulatory decision or that there is a less burdensome way to resolve the issues, you should follow the procedures outlined in the "A Suggested Approach to Resolving Least Burdensome Issues" document. It is available on our Center web page at: http://www.fda.gov/cdrh/modact/leastburdensome.html

UPLOADED ON MARCH 3, 2004

Section D
Statement of Indications for Use

The Statement of Indications for Use for the proposed device is provided on the following page. An extra copy has been included in a plastic sleeve for reviewer convenience.

Indications for Use

510(k) Number (if known): _____

Device Name: **ENDOPATH® Endocutter 60 Endoscopic Linear Cutter**

Indications for Use:

The ENDOPATH Endocutter 60 Endoscopic Linear Cutter is intended for transection, resection, and/or creation of anastomoses. The instrument has application in multiple open or minimally invasive general, gynecologic, urologic, thoracic, and pediatric surgical procedures. It can be used with staple line or tissue buttressing materials.

Prescription Use ___X___ (Part 21 CFR 801 Subpart D) AND/OR Over-The-Counter Use _____ (21 CFR 801 Subpart C)

(PLEASE DO NOT WRITE BELOW THIS LINE - CONTINUE ON ANOTHER PAGE IF NEEDED)

Concurrence of CDRH, Office of Device Evaluation (ODE)

(Posted November 13, 2003)

Section E
510(k) Summary

The 510(k) Summary of Safety and Effectiveness Information for the proposed device is on the following pages. An extra copy has been included in a plastic sleeve for reviewer convenience.

510(k) Summary

Company Ethicon Endo-Surgery, Inc.
4545 Creek Road
Cincinnati, OH 45242

Contact Georgia C. Abernathy, MBA, RAC
Senior Regulatory Affairs Associate
Telephone: (513) 337-3179
Fax: (513) 337-1444
Email: gabernat@eesus.jnj.com

Date Prepared April 19, 2005

Device Name Trade Name: ENDOPATH® Endocutter 60 Endoscopic Linear Cutter
Common or Usual Name: Linear Cutter
Classification Name: Endoscope and Accessories and Implantable Staples
[21 CFR 876.1500 (KOG) and 21 CFR 878.4750 (GDW)]

Predicate Device ENDOPATH® Linear Cutters and Staplers

Device Description These instruments are all mechanical surgical stapling devices. The ENDOPATH Endocutter 60 Endoscopic Linear Cutter models are sterile, single patient use instruments that deliver staples while simultaneously dividing tissue between rows. These instruments may be used in either open or endoscopic procedures. The devices will be available in three shaft lengths: standard, compact and long, and will be furnished without a cartridge. Cartridges for the Endocutter 60 devices will be available in sizes that correspond to the thickness of tissue that is to be transected or resected: white (vascular/thin), blue (standard), gold (thick, less dense) and green (thick).

Indications for Use The ENDOPATH Endocutter 60 Endoscopic Linear Cutter is intended for transection, resection, and/or creation of anastomoses. The instrument has application in multiple open or minimally invasive general, gynecologic, urologic, thoracic, and pediatric surgical procedures. It can be used with staple line or tissue buttressing materials.

Technological Characteristics The device incorporates a new 60mm cartridge design; new enhanced compression system; rigid anvil and E-beam with robust, one-piece design; wide jaw aperture for easy tissue positioning and manipulating; and ergonomic features for one-handed use (ability to clamp, fire and release with automatic knife return). The ENDOPATH Endocutter 60 device will be available in three shaft lengths: standard, compact and long. Compatible cartridges come in four sizes to accommodate various tissue thicknesses. The gold cartridge is an additional size added to the product line. The gold cartridge staple wire diameter is identical to the existing blue cartridge staple wire diameter, with a longer staple leg length for thicker indicated tissue.

Performance Data Bench testing and preclinical laboratory evaluations were performed to demonstrate that the device will perform as intended.

Section F
Truthful and Accurate Statement

The Truthful and Accurate Statement for the proposed device is provided on the following pages.

Truthful and Accurate Statement

The Truthful and Accurate Statement, as required by 21 CFR 807.87(k) is provided below.

I certify that, in my capacity as Senior Regulatory Affairs Associate of Ethicon Endo-Surgery, Inc., I believe, to the best of my knowledge, that all data and information submitted to me in the premarket notification are truthful and accurate and that no material fact related to a substantial equivalence decision has been omitted.

Georgia C. Abernathy

Georgia C. Abernathy, MBA, RAC
Senior Regulatory Affairs Associate
Ethicon Endo-Surgery, Inc.

April 19, 2005
Date

Section G
Device Description

Device Design and Principles of Operation

The ENDOPATH Endocutter 60 Endoscopic Linear Cutter ("Endocutter 60") models are sterile, single patient use instruments that deliver staples while simultaneously dividing tissue between rows (See Figure G-1).

Figure G-1
ENDOPATH Endocutter 60 Endoscopic Linear Cutter

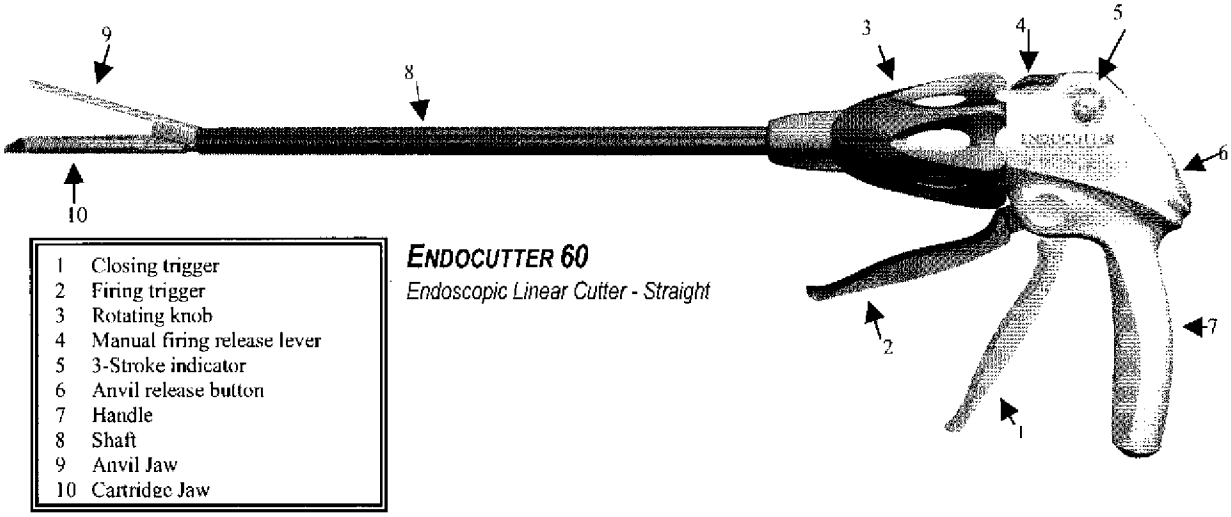

The Endocutter 60 instrument may be used in either open or endoscopic procedures. The Endocutter 60 Linear Cutter will be available in three shaft lengths: standard, compact and long, and will be furnished without a cartridge (See Table G-1 below).

Table G-1
Endocutter 60 Endoscopic Linear Cutter Shaft Style and Sizes

Product Code	Shaft			
	Configuration	Style	Diameter	Length
EC60	Straight	Standard	12.7mm	34cm
SC60	Straight	Compact	12.7mm	28cm
LONG60	Straight	Long	12.7mm	44cm

Figure G-2
ENDOPATH Endocutter 60 Endoscopic Linear Cutters – Various Views of the Device

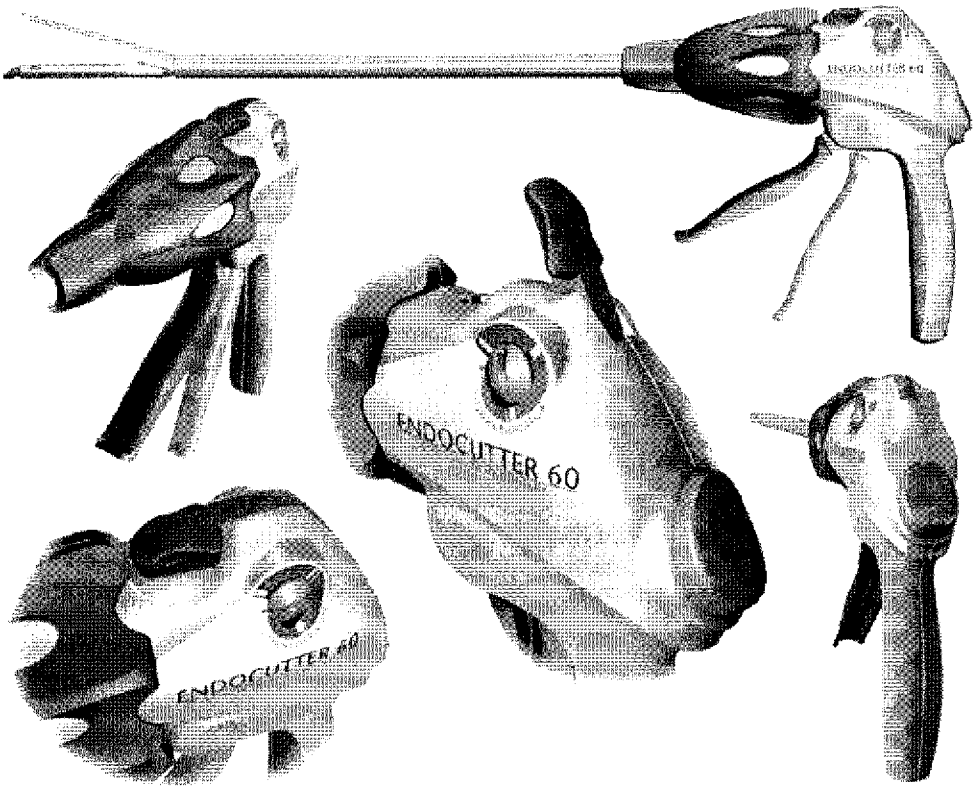

The Endocutter 60 instrument with white, blue, gold and green cartridges delivers two triple-staggered rows of staples. The instrument features safety lockouts that prevent firing the instrument with no cartridge, an improperly installed cartridge, or a previously-fired cartridge. The instrument has a staple line that is approximately 60mm long and a cut line that is approximately 57mm long.

A schematic of a typical cartridge device assembly (sometimes called a "reload") is shown in Figure G-3. The device consists of the cartridge, the staples and the staple retainer cap, which protects the staple leg points during shipping and transportation and is to be removed before use.

Figure G-3
Cartridge Device Assembly

(b)(4)

The instrument is shipped without a cartridge and must be loaded prior to use. Only the indicated cartridges are to be used in the Endocutter 60 instrument, but the Endocutter 60 cartridges are interchangeable across all Endocutter 60 family instrument codes (See Table G-2 below). An additional table of information about the different cartridges is shown later in this Section in Table G-3: Cartridge Information.

Table G-2
Endocutter 60 Cartridges (Reloads)

Product Code	Color	Tissue Thickness	Closed Staple Height
ECR60W	White	Vascular/thin	1.0mm
ECR60B	Blue	Standard	1.5mm
ECR60D	Gold	Thick, less dense	1.8mm
ECR60G	Green	Thick	2.0mm

Cartridges accommodating various tissue thicknesses (i.e., vascular/thin, standard, thick) will be available for each shaft length. Each device may be reloaded a number of times for a maximum number of firings per instrument according to product insert instructions.

The common element among all these instruments is that they are all mechanical surgical stapling devices.

In general, these linear cutter instruments are intended for use in transection and resection of tissue during open or minimally invasive surgical procedures. Linear cutter instruments are also intended for use in the creation of anastomoses in these procedures. Specific instrument indications are provided in the specific instrument's product insert labeling.

Purpose of this Premarket Notification

The purpose of this 510(k) is to inform the FDA of a new device design based upon a predicate device currently marketed by Ethicon Endo-Surgery, the ENDOPATH® ETS45 Endoscopic Linear Cutter. (b)(4)
(b)(4)

ENDOPATH Endocutter 60 device will be available in three shaft lengths: standard, compact and long.

Compatible cartridges come in four sizes to accommodate various tissue thicknesses. The gold cartridge is an additional size added to the product line. (b)(4)
(b)(4)
(b)(4)

Table G-3
Cartridge Information

Product Code	Color of Cartridge	Number of Rows	Staple Leg Length	Nominal Closed Staple Height	Wire Diameter
ECR60W	White	6 row	2.5mm	1.0mm	(b)(4)
ECR60B	Blue	6 row	3.5mm	1.5mm	
ECR60D	Gold	6 row	3.8mm	1.8mm	
ECR60G	Green	6 row	4.1mm	2.0mm	

Labeling revisions to the product insert Indications to delete reference to specific procedures and materials will be made to clarify the Indications.

Labeling will also be updated to reflect a new Contraindication for tissue compression range associated with the new gold cartridge staple dimensions (See Section L: Draft Product Labeling), described below.

The labeling revision to the product insert Contraindications Section includes the addition of the following contraindication statement: "**Do not use the instruments with gold reload on any tissue that requires excessive force to compress to 1.8mm or any tissue that compresses easily to below 1.8mm.**" This statement is consistent with the Contraindications for other size cartridges (e.g., for the white cartridge, the statement reads: "Do not use the instruments with white reload on any tissue that requires excessive force to compress to 1.0mm or on any tissue that compresses easily to below 1.0mm.").

Product performance evaluations demonstrate that the new device meets product specifications. (b)(4)
(b)(4)
(b)(4)

All major changes are summarized in Section K-2 in this submission.

Indications for Use

The ENDOPATH Endocutter 60 Endoscopic Linear Cutter is intended for transection, resection, and/or creation of anastomoses. The instrument has application in multiple open or minimally invasive general, gynecologic, urologic, thoracic, and pediatric surgical procedures. It can be used with staple line or tissue buttressing materials.

Regulatory History of the Device

Ethicon Endo-Surgery has commercially marketed the ENDOPATH Endocutter product line for several years. Information on devices to which substantial equivalence is claimed is contained in the following submissions, the most recent being mentioned first.

Table G-4
Devices to Which Substantial Equivalence is Claimed

510(k) #	Date cleared	Purpose of the Submission
K020779	6/5/02	(b)(4)
K002398	11/3/00	
K961390	6/25/96	

Section H
Device Materials and Biocompatibility

Device Materials

With the exception of the color of the new "gold" cartridge, the materials in the other ENDOPATH Endocutter 60 Endoscopic Linear Cutter cartridges are identical to those of the currently marketed predicate device.

The thick tissue cartridge currently is colored green, the standard tissue cartridge is blue and the vascular/thin tissue cartridge is white, thereby making each size easily distinguishable from the other sizes. The new thick, less dense tissue cartridge is gold-colored.

Table H-1
Comparison of Materials of Endocutter 60 Linear Cutter and Predicate Device

	ENDOPATH Endocutter 60 Endoscopic Linear Cutter –All Lengths (New Device)	**ENDOPATH ETS45 Endoscopic Linear Cutter (K961390, K030779, K002398) (Predicate Device)**
Product Code	**EC60, SC60, LONG60**	**TSB45, SCB45, LONG45A**
Length	Standard, Compact, Long	Standard, Compact, Long
Materials in the device classified as **limited surface contact (skin) of less than 24 hours** as defined by ISO 10993-1		
(b)(4)		Identical
		Identical
		Identical
		Identical
		Identical
		Identical
		Identical
		Identical
		Identical
		Identical
Materials in the device classified as **tissue, bone or dentin contact of less than 24 hours** as defined by ISO 10993-1:		
(b)(4)		Identical
		Identical
		Identical
		Identical
		Identical
		Identical
		Identical
		Identical
		Identical
		Identical
		Identical

Table H-2
Comparison of Cartridge Materials for Endocutter 60 Linear Cutters and Predicate Devices *

	White Cartridge		**Blue Cartridge**		***Gold Cartridge***	**Blue Cartridge**	**Green Cartridge**	
	(New Device)	(Marketed Predicate)	***(New Device)***	(Marketed Predicate)	***(New Device)***	(Marketed Predicate)	***(New Device)***	(Marketed Predicate)
Product Code	***ECR60W***	TR45W	***ECR60B***	6R45B	***ECR60D***	TR45B	***ECR60G***	TR45G
Tissue Thickness	Vascular/ Thin	Identical	Standard	Identical	***Thick, Less Dense***	Standard	Thick	Identical
Device materials classified as **limited surface contact (skin) of less than 24 hours** as defined by ISO 10993-1								
(b)(4)								
Device materials classified as **tissue, bone or dentin contact of less than 24 hours** as defined by ISO 10993-1:								
(b)(4)								
Device materials classified as **tissue/bone implant devices with greater than 30 days** of patient contact as defined by ISO 10993-1								
(b)(4)								

* Note: Changes are ***italicized*** for ease of review.

Biocompatibility of Materials

The biocompatibility of materials used in the ENDOPATH Endocutter 60 Endoscopic Linear Cutter line was evaluated based on EN ISO 10993-1: "Biological Evaluation of Medical Devices - Part 1: Evaluation and Testing" and on FDA General Program Memorandum #G95-1: Use of International Standard ISO-10993, "Biological Evaluation of Medical Devices - Part 1: Evaluation and Testing."

All tests were performed in accordance with FDA's Good Laboratory Practice Standard.

These materials can be divided into groups based on patient contact. The first group is comprised of materials that are classified as surface devices (components) with less than 24 hours of skin contact (Limited Surface Contact - Skin) (See Table H-3). The materials in this group are on the **handle** of the ENDOPATH Endocutter 60 Endoscopic Linear Cutter.

Table H-3
Limited Surface Contact (<24 hrs.) - Skin

Test / Material	(b)(4)				
(b)(4)	Passed	Passed	Passed	Passed	Not Done[1]
	Passed	Passed	Passed	Passed	Passed
	Passed	Passed	Passed	Passed	Passed
	Passed	Passed	Passed	Passed	Passed
	Passed	Passed	Passed	Passed	Passed
	Passed	Passed	Passed	Passed	Not Done[1]
	Passed	Passed	Passed	Passed	Not Done[1]
	Passed	Passed	Passed	Passed	Not Done[1]
	Passed	Passed	Passed	Passed	Passed

[1] Test not required by ISO 10093-1 for surface components with skin contact of < 24 hrs.

A second group is comprised of materials that are classified as externally communicating devices with tissue or bone contact of less than 24 hours (Limited Tissue Contact) (See Table H-4). The materials in this group are on the **outside surface** of the Linear Cutters.

Table H-4
Limited Tissue Contact (<24 hrs.) - Tissue, Bone Dentin

Test / Material	(b)(4)			
(b)(4)	Passed	Passed	Passed	Passed
	Passed [2]	Passed	Passed	Passed
	Passed [2]	Passed	Passed	Passed
	Not Done[1]	Passed	Passed	Passed
	Passed	Passed	Passed	Passed
	Not Done[1]	Passed	Passed	Passed
	Passed [2]	Passed	Passed	Passed
	Passed [2]	Passed	Passed	Passed
	Passed	Passed	Passed	Passed

[1] Test not required by ISO 10093-1 for surface components with skin contact of < 24 hrs.
[2] Test performed by manufacturer of the material.

The third group is comprised of materials that are classified as tissue or bone implant devices with greater than 30 days of patient contact (Permanent Patient Contact / Implant) (See Table H-5). The materials in this third group are used to manufacture the **staple** or are **lubricants** used on the staples.

Table H-5
Implant (>30 days) - Tissue, Bone Implant

Test	(b)(4)	
(b)(4)	Passed	Passed
	Passed	Passed
	Passed	Passed
	Passed	Passed
	Passed	Passed
	Passed	Passed
	Passed	Passed
	Passed	Passed
	Passed	Passed
	Passed	Passed
	Passed	Passed
	Passed	Passed
	Passed	Passed

The (b)(4) is identical for all ENDOPATH Linear Cutter cartridges. The staple lubricant, (b)(4) meets the requirements of the National Formulary for (b)(4) It has been found acceptable for use in medical devices with tissue/bone implant with greater than 30 days of patient contact in accordance with the ISO 10993-1 Standard and FDA Memorandum #G95-1.

All materials in the 60mm Endoscopic Linear Cutter meet the biocompatibility requirements for the appropriate level of tissue contact.

Section I
Performance Testing and Animal Studies

Performance Testing

This section describes the performance testing and results available in support of this submission. Performance testing (see Table I-1) as well as laboratory animal studies (see Table I-2) was conducted. An outline of the testing is followed by details of the studies.

No applicable mandatory performance standards or special controls exist for this device.

Table I-1
Performance Testing Using Endocutter 60 Devices

Performance Test	Purpose	Results
(b)(4)		Satisfactory results
		Satisfactory results
		Satisfactory results
		Satisfactory results

(b)(4) **Testing**

Purpose

(b)(4)

(b)(4)

Criteria For Success

- (b)(4)
-

Test Methodology

(b)(4)

Results

(b)(4)

Table I-2

(b)(4) **Statistics**

Type	(b)(4)
Endocutter 60	
ETS45	

Conclusions

(b)(4)

(b)(4)

Purpose

(b)(4)

Criteria for Success

(b)(4)

Test Methodology

(b)(4)

Results

(b)(4)

Table I-3

(b)(4) **Comparison**

(b)(4)

Conclusion

(b)(4)

(b)(4)

Compatibility with (b)(4)

Purpose

(b)(4)

Criteria For Success

(b)(4)

Test Methodology

(b)(4)

Results

(b)(4)

Conclusion

(b)(4)

Animal Studies

Animal studies (see Table I-5) were conducted and an outline of the testing is followed by details of the studies.

Table I-5
Animate Studies Using Endocutter 60 Devices

Animate Test	Purpose	Results
(b)(4)		Satisfactory results
		Satisfactory in indicated tissue thicknesses

(b)(4)

Table I-7

(b)(4)

Test Methodology

(b)(4)

(b)(4)

Results

(b)(4)

Table I-9

(b)(4)

Conclusion

(b)(4)

(b)(4),Testing Data

(b)(4),Testing Data

(b)(4),Testing Data

(b)(4),Testing Data

(b)(4)

Section J
Sterilization and Packaging

Sterilization

Sterilization of the device is identical to the marketed device. The device is sterilized by gamma irradiation. Radiation qualifications are performed according to the requirements in ISO 11137-1994 *Sterilization of Health Care Products – Requirements for Validation and Routine Control – Radiation Sterilization.* (b)(4)
(b)(4)

The device is intended for single patient use and is not intended to be reused or resterilized.

The product will have a five-year shelf life.

Packaging

Each ENDOPATH Endocutter 60 Endoscopic Linear Cutter is packaged in a (b)(4)
(b)(4)

(b)(4)
(b)(4)

(b)(4)

Section K
Statement of Substantial Equivalence

The "510(k) Substantial Equivalence Decision Making Process (Detailed) Decision Tree" (Blue Book Memorandum K86-3, 1986) was used in determining substantial equivalence of the **ENDOPATH Endocutter 60 Endoscopic Linear Cutters** to the predicate device. The decision-making chart, with the path applicable to this submission highlighted, is provided in Section K-1.

New device is compared to marketed device

Marketed devices: ENDOPATH & PROXIMATE Linear Cutters and Staplers cleared under K020779 on 6/5/2002
ENDOPATH ETS45 Endoscopic Linear Cutter cleared under K002398 on 11/3/2000
ENDOPATH ETS Endoscopic Linear Cutter and ETS-Flex Endoscopic Articulating Linear Cutter Devices cleared under K961390 on 6/25/1996.

New device: **ENDOPATH Endocutter 60 Endoscopic Linear Cutters**

Does new device have same indications statement?

No. The Indications for Use statement has been changed for clarity. (Language in *italics* in the predicate Indication statement has been removed from the Endocutter Indications.)

ENDOPATH Endocutter 60 Endoscopic Linear Cutter
The ENDOPATH Endocutter 60 Endoscopic Linear Cutter is intended for transection, resection, and/or creation of anastomoses. The instrument has application in multiple open or minimally invasive general, gynecologic, urologic, thoracic, and pediatric surgical procedures. It can be used with staple line or tissue buttressing materials.

ENDOPATH Endoscopic Linear Cutter
The ENDOPATH Endoscopic Linear Cutter is intended for transection, resection, and/or creation of anastomoses. The instrument has application in multiple open or minimally invasive general, gynecologic, urologic *(including radical prostatectomy)*, thoracic, and pediatric surgical procedures. It can be used with staple line or tissue buttressing materials *such as bovine pericardium*.

Do the differences alter the intended therapeutic / diagnostic effect?

No. The Indications for Use statement changes are for clarification only and do not alter the intended therapeutic or diagnostic effect (See previous paragraphs for exact language in each Indications statement).

Does the device have the same technological characteristics, (e.g., design, materials, etc.)?

No. The device incorporates a new 60mm cartridge design: (b)(4)
(b)(4)
(b)(4) The ENDOPATH Endocutter 60

device will be available in three shaft lengths: standard, compact and long. Compatible cartridges come in four sizes to accommodate various tissue thicknesses. The gold cartridge is an additional size added to the product line. (b)(4)
(b)(4)
(b)(4)

Could the new characteristics affect safety or effectiveness?

(b)(4)

Do the new characteristics raise new types of safety or effectiveness questions?

No, they do not raise new types of safety or effectiveness questions. The new design of the Endocutter 60 enables the user to staple a 60mm line, rather than 45mm, and the new 60mm cartridges are identical to the marketed devices except for the length of the cartridge. The only exception is the addition of the gold cartridge, which is bracketed in size by the blue cartridge and the green cartridge and has a different cartridge color.

Do accepted scientific methods exist for assessing effects of new characteristics?

Yes. Test methods exist for assessing functionality (b)(4)
(b)(4)
(b)(4) (Refer to Section I, Performance Testing and Animal Studies.) Biocompatibility can be evaluated based on the ISO 10993-1 Standard and on FDA Guidelines. (Refer to Section H, Device Materials and Biocompatibility.)

Are performance data available to assess effects of new characteristics?

Yes. Testing was performed to ensure that the new characteristics perform equivalently and that the new materials were assessed for biocompatibility. (Refer to Section I, Performance Testing and Animal Studies and Section H, Device Materials and Biocompatibility.)

Performance data demonstrate equivalence?

Yes. The device continues to perform equivalently.

Substantially Equivalent Determination

Section K-1
Substantial Equivalence Decision Making Process Decision Tree

The Substantial Equivalence Decision Making Process Decision Tree for the proposed device is provided on the following page.

Section K-1
510(k) Substantial Equivalence Decision Making Process (Detailed) Decision Tree (CDRH 510(k) Manual 92-4158)

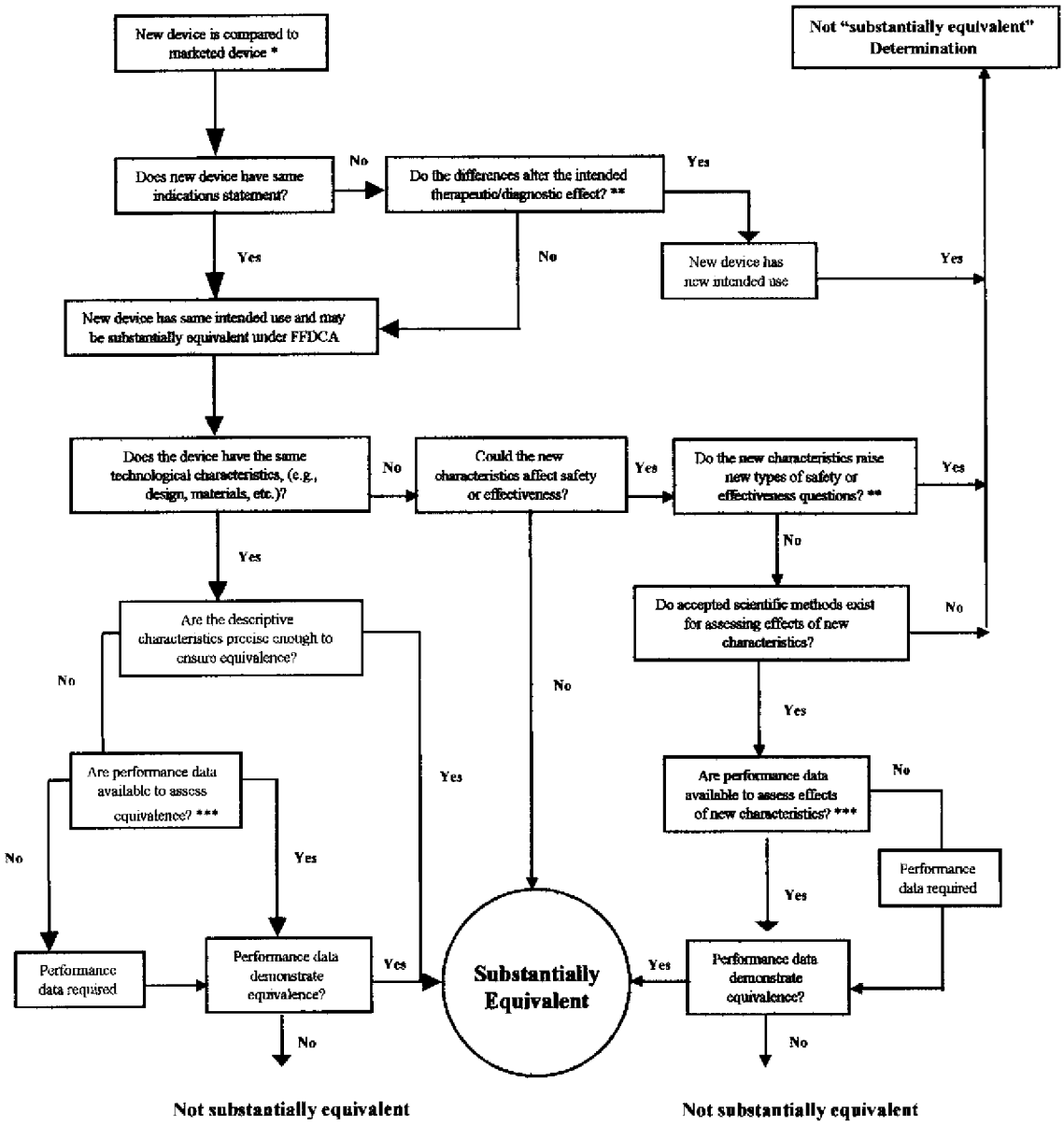

* 510(k) submissions compare new devices to marketed devices. FDA requests additional information if the relationship between marketed and "predicate" devices is unclear.

** This decision is normally based on descriptive information alone, but limited testing information is sometimes required.

*** Data may be in the 510(k), other 510(k)s, the Center's classification files, or the literature.

Section K-2
Side-by-Side Comparison Table

A Side-by-Side Comparison Table for the proposed device and the predicate device is provided on the following page.

Section K-2
Side-By-Side Comparison Table

The following is a side-by-side comparison table (summary of features) of the ENDOPATH Endocutter 60 Endoscopic Linear Cutter to the legally marketed (predicate) device, ENDOPATH Endoscopic Linear Cutters.

Table K-1
Summary of Features of Current Device and Predicate Device

	ENDOPATH Endocutter 60 Endoscopic Linear Cutter (new device	ENDOPATH Endoscopic Linear Cutter (predicate)
Similarities		
Type of device	Mechanical surgical stapling device	Identical
Staple Material	(b)(4)	Identical
Sterility	Sterile, Single Patient Use	Identical
Shaft length	340mm Standard 440mm Long	340mm Standard 440mm Long
Fits trocar size… All	12mm	12mm
Preloaded with a cartridge Long	No	No
Thickness of tissue to be transected/ resected White Blue Green	 Vascular / thin Standard Thick	 Vascular / thin Standard Thick
Closed staple height White Blue Green	 1.0mm 1.5mm 2.0mm	 1.0mm 1.5mm 2.0mm

Table K-1 continued on next page.

Table K-1 (continued)

	ENDOPATH Endocutter 60 Endoscopic Linear Cutter (new device)	ENDOPATH Endoscopic Linear Cutter (predicate)
Differences		
Indications for Use	The ENDOPATH Endocutter 60 Endoscopic Linear Cutter is intended for transection, resection, and/or creation of anastomoses. The instrument has application in multiple open or minimally invasive general, gynecologic, urologic, thoracic, and pediatric surgical procedures. It can be used with staple line or tissue buttressing materials.	The ENDOPATH Endoscopic Linear Cutter is intended for transection, resection, and/or creation of anastomoses. The instrument has application in multiple open or minimally invasive general, gynecologic, urologic **(including radical prostatectomy)**, thoracic, and pediatric surgical procedures. It can be used with staple line or tissue buttressing materials **such as bovine pericardium**.
Jaw length	**60mm**	**45mm**
Firing mechanism	**Multi-stroke (3** strokes to fire)	**Single stroke (1** stroke to fire)
Jaw closure	(b)(4)	(b)(4)
Knife design		
Shaft length	**280mm** Compact	**240mm** Compact
Safety Lockout design feature	**In instrument** **Empty, spent or misloaded cartridges**	**Cartridge only** **Spent cartridge only**
Number of firings per instrument	**12**	**8**
Preloaded with a cartridge? Standard Compact	 **No** **No**	 **Yes** **Yes**
Thickness of tissue to be transected/ resected Gold	**Thick, less dense**	**Not available**
Closed staple height Gold	**1.8mm**	**Not available**
Number of staples White Blue Gold Green	 **88** **88** **88** **88**	 **66** **66** **Not available** **44**

Section L
Draft Product Labeling

Draft labels and Package Insert for the proposed device are included.

Please note that in this Draft Product Labeling the names "Endocutter 60" and "echelon60" are interchangeable but represent the same device.

A labeling revision to the product insert Contraindications Section includes the addition of the following Contraindication statement: "**Do not use the instruments with gold cartridge on any tissue that requires excessive force to compress to 1.8mm or any tissue that compresses easily to below 1.8mm.**" This statement is consistent with the Contraindications for other size cartridges (e.g., for the white cartridge, the statement reads: "Do not use the instruments with white reload on any tissue that requires excessive force to compress to 1.0mm or on any tissue that compresses easily to below 1.0mm.").

A85560P00 EC60 English 510K.qxd 4/18/06 10:55 AM Page 1

echelon60

ENDOPATH® STAPLER

Endoscopic Linear Cutter – Straight, Compact Endoscopic Linear Cutter – Straight, and Long Endoscopic Linear Cutter – Straight

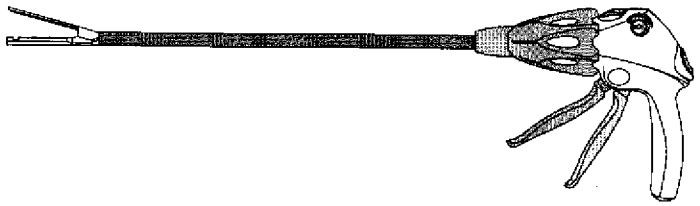

Please read all information carefully.

Failure to properly follow the instructions may lead to serious surgical consequences, such as leakage or disruption.

Important: This package insert is designed to provide instructions for use of the ECHELON 60 Endoscopic Linear Cutters. It is not a reference to surgical techniques.

ETHICON ENDO-SURGERY, INC.
a Johnson & Johnson company

Instructions

Draft Instructions

68

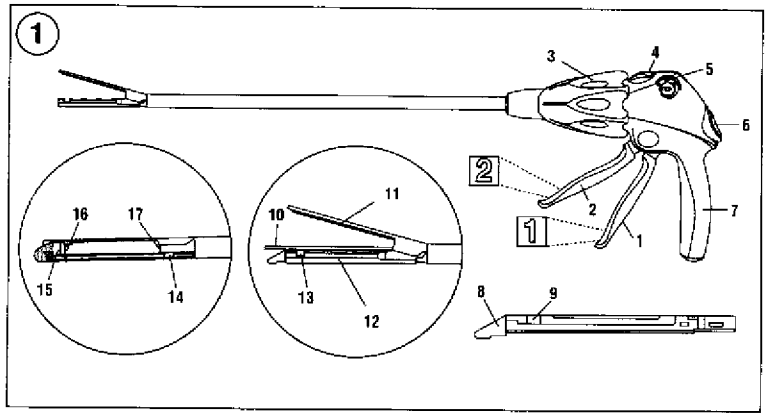
1
3
4
5
6
2
1
7
16
17
15
14
10
11
13
12
8
9

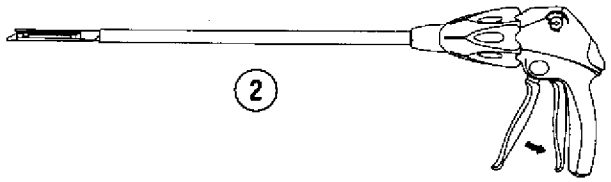
2

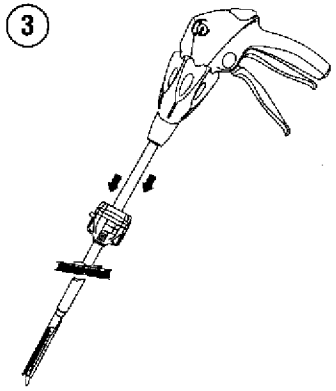
3

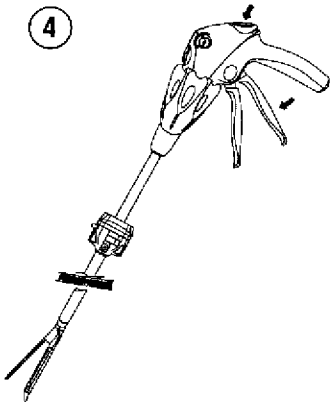
4

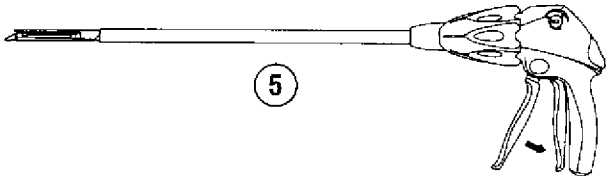
5

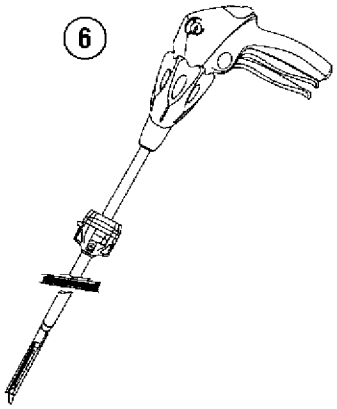
6

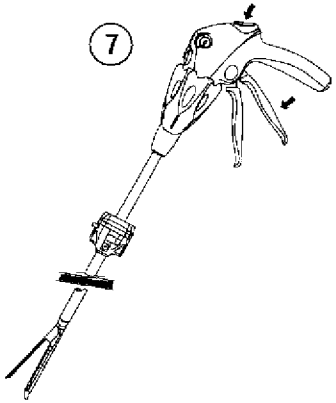
7

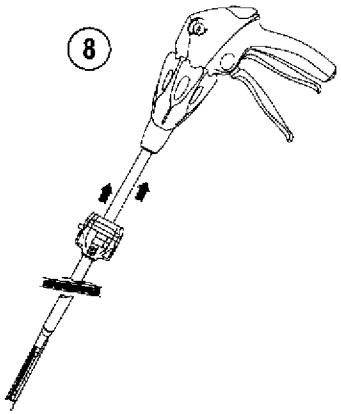
8

Indications

The ECHELON 60 Endoscopic Linear Cutter – Straight, Compact ECHELON 60 Endoscopic Linear Cutter – Straight, and the Long ECHELON 60 Endoscopic Linear Cutter – Straight are intended for transection, resection, and/or creation of anastomoses. The instruments have application in multiple open or minimally invasive general, gynecologic, urologic, thoracic, and pediatric surgical procedures. They can be used with staple line or tissue buttressing materials.

Contraindications

- Do not use the instruments with white reload on any tissue that requires excessive force to compress to 1.0 mm or on any tissue that compresses easily to below 1.0 mm.
- Do not use the instruments with blue reload on any tissue that requires excessive force to compress to 1.5 mm or on any tissue that compresses easily to below 1.5 mm.
- Do not use the instruments with gold reload on any tissue that requires excessive force to compress to 1.8 mm or on any tissue that compresses easily to below 1.8 mm.
- Do not use the instruments with green reload on any tissue that requires excessive force to compress to 2.0 mm or on any tissue that compresses easily to below 2.0 mm.
- Do not use the instruments on ischemic or necrotic tissue.
- Do not use the instruments on the aorta.
- Do not use any linear cutter on major vessels without making provision for proximal and distal control.
- Do not use the instruments on solid organs, such as the liver or spleen, where attempted compression would be destructive.
- These instruments are not intended for use when surgical stapling is contraindicated.

Device Description

The ECHELON 60 Endoscopic Linear Cutter – Straight, Compact ECHELON 60 Endoscopic Linear Cutter – Straight, and the Long ECHELON 60 Endoscopic Linear Cutter – Straight are sterile, single patient use instruments that deliver staples while simultaneously dividing tissue between rows. ECHELON 60 instruments with white, blue, gold, and green reloads deliver two triple-staggered rows of staples. The instruments' safety lock-out feature is designed to prevent a used reload from being refired. The instruments have a staple line that is approximately 60 mm long and a cut line that is approximately 57 mm long. A staple retaining cap on the reload protects the staple leg points during shipping and transportation.

The instruments are shipped without a cartridge and must be loaded prior to use. Use only the indicated cartridges in the ECHELON 60 Endoscopic Linear Cutter instrument. ECHELON 60 Endoscopic Linear Cutter cartridges are interchangeable across all ECHELON 60 Endoscopic Linear Cutter family instrument codes. Do not use ECHELON 60 Endoscopic Linear Cutter family cartridges in an instrument other than an ECHELON 60 Endoscopic Linear Cutter family instrument.

Do not load the instrument more than 12 times for a maximum of 12 firings per instrument. The use of the instrument with staple line buttressing material may reduce the number of firings.

ECHELON 60 Endoscopic Linear Cutter Product Family

Instrument Code	Description	Shaft Length
EC60	ECHELON 60 Endoscopic Linear Cutter – Straight (does not contain a cartridge)	340 mm
SC60	Compact ECHELON 60 Endoscopic Linear Cutter – Straight (does not contain a cartridge)	280 mm
LONG60	Long ECHELON 60 Endoscopic Linear Cutter – Straight (does not contain a cartridge)	440 mm

Specifications for the ECHELON 60 Endoscopic Linear Cutter family reloads follow:

Supported Instrument Codes: EC60, SC60, and LONG60

Reload Code	Staple Leg Length	Closed Staple Height	Number of Staples	Reload Color	Staple Rows
ECR60W	2.5 mm	1.0 mm	88	White	6
ECR60B	3.5 mm	1.5 mm	88	Blue	6
ECR60D	3.8 mm	1.8 mm	88	Gold	6
ECR60G	4.1 mm	2.0 mm	88	Green	6

English

Illustration and Nomenclature (Illustration 1)

1. Closing Trigger (1)
2. Firing Trigger (2)
3. Rotating Knob
4. Manual Firing Release Lever
5. 3-Stroke Indicator
6. Anvil Release Button
7. Handle
8. Reload Gripping Surface
9. Reload Alignment Tab
10. Staple Retaining Cap
11. Anvil Jaw
12. Cartridge Jaw
13. Reload Alignment Slot
14. Knife Blade Indicator
15. Staple Line
16. Cut Line
17. Proximal Black Line

Instructions for Use

Verify compatibility of all instruments and accessories prior to using the instrument (refer to **Warnings and Precautions**).

1 Using sterile technique, remove the instrument from the package. To avoid damage, do not flip the instrument into the sterile field.

2 Remove the Instructions for the multiple stroke indicator.

3 Refer to the ECHELON 60 Endoscopic Linear Cutter Reload instructions for use for staple cartridge loading information.

4 Close the jaws of the instrument by squeezing the closing trigger (light gray and labeled with a Number "1") until it locks in place. An audible click indicates that the closing trigger is locked. (Illustration 2)
Caution: Do not squeeze the firing trigger (dark gray and labeled with a Number "2") at this time.

5 Introduce the instrument into the body cavity through the appropriate trocar or incision. (Illustration 3)
Caution: The instrument jaws must be closed to be introduced into the cavity through a trocar of the appropriate size.
Caution: When placing the instrument through the trocar or incision, avoid advancing the firing trigger accidentally as this action might activate the lockout. If this occurs, the instrument will not allow the anvil release button to reopen the instrument jaws. To recover from this condition, remove the instrument, pull the manual release lever, then press the anvil release button and replace the cartridge.

6 Once in the cavity, press the anvil release button to reopen the instrument jaws and return the closing trigger (1) to its original position. (Illustration 4)

7 Position the instrument around the tissue to be stapled.
Caution: Ensure that the tissue lies flat and is positioned properly between the jaws. Any "bunching" of tissue along the reload, particular in the crotch of the jaws, may result in an incomplete staple line.
The distal black lines on the anvil and cartridge channel designate the ends of the staple line. The line on the cartridge channel that reads "cut" references the cut line on the device.
Note: Ensure that tissue has not extended behind the proximal black line on the cartridge channel. Tissue extended into the instrument beyond the black line may be transected without staples.

8 After positioning the instrument jaws around the tissue to be stapled, close the jaws by squeezing the closing trigger (1) toward the handle until it locks. An audible tactile click indicates that the closing trigger is locked. (Illustration 5)
Caution: When placing the instrument on the tissue to be stapled, ensure that no hard obstruction (such as a clip) is included with the tissue inside the jaws. Stapling over an obstruction may result in an incomplete cut or improperly formed staples, or both.
Caution: If the closing trigger (1) is difficult to lock, **reposition the instrument and take a smaller amount of tissue.** (See **Contraindications** for appropriate reload selection.)
Note: The use of staple line buttressing materials with the instrument may require an increased force to close.
Note: When firing across thick tissue, holding the tissue for 15 seconds after closing and prior to firing may result in better staple formation.

9 Fire the instrument by squeezing the firing trigger (2). (Illustration 6) **The Endoscopic Linear Cutter requires multiple strokes to fire the device. Three complete strokes will advance the staple line a full 60 mm.**

10 After the stroke line has advanced a full 60 mm, the knife blade will automatically return. The 3-stroke indicator on the handle or knife blade indicator on the bottom side of the cartridge channel will advance in conjunction with the staple and cut lines. Refer to the 3-stroke indicator or knife blade indicator to ensure that the device has been fired 3 complete strokes.
Note: The manual firing release lever will abort the firing sequence, return the knife blade, and end the staple line before the full 60 mm staple line is applied.
Caution: Once the knife blade has been returned either manually or automatically, the same cartridge may not be used. If reinitiation of firing is resumed, the instrument will lock out. If resistance is felt, stop, remove the instrument, and pull the manual release lever; then press the anvil release button and replace the cartridge. Firing through the lockout mechanism will break the instrument.
Note: The use of staple line buttressing materials with the instrument may require an increased force to fire and may reduce the number of firings.
Note: Crossing of staple lines may reduce the number of firings.

11 Press the anvil release button to separate the instrument jaws and allow both triggers to return to their original positions. (Illustration 7) Before removing the instrument, make sure that tissue is removed from the jaws.
Caution: After removing the instrument, examine the staple lines for pneumostasis/hemostasis and proper staple closure. If pneumostasis/hemostasis is not present, appropriate techniques should be used to achieve pneumostasis/hemostasis.
Caution: If the jaws do not automatically open after the anvil release button is pressed, first ensure that the knife is in the retracted position by verifying that the 3-stroke indicator or knife blade indicator is in the starting position. If the 3-stroke indicator or knife blade indicator is not in the starting position, pull the manual firing release lever until the 3-stroke indicator or knife blade indicator returns to the starting position. If the jaws do not open at this point, then gently pull the closing trigger (1) upward (away from handle) until both firing and closing triggers return to their original positions.
Caution: If the firing mechanism becomes inoperative, do not refire the instrument. (Remove and discard the instrument.)

12 To remove the instrument from the cavity, squeeze the closing trigger (1) until it locks, closing the jaws. (Illustration 8)

13 Completely withdraw the instrument in the closed position.

14 Refer to the ECHELON 60 Endoscopic Linear Cutter Reload instructions for use for reloading information.

Warnings and Precautions

- Minimally invasive procedures should be performed only by persons having adequate training and familiarity with minimally invasive techniques. Consult medical literature relative to techniques, complications, and hazards prior to performance of any minimally invasive procedure.

- Minimally invasive instruments may vary in diameter from manufacturer to manufacturer. When minimally invasive instruments and accessories from different manufacturers are employed together in a procedure, verify compatibility prior to initiation of the procedure.
- A thorough understanding of the principles and techniques involved in laser, electrosurgical, and ultrasonic procedures is essential to avoid shock and burn hazards to both patient and medical personnel and damage to the device or other medical instruments. Ensure that electrical insulation or grounding is not compromised. **Do not** immerse electrosurgical instruments in liquid unless the instruments are designed and labeled to be immersed.
- Before using, remove the staple retaining cap and observe the surface of the reload. The reload must be replaced with another reload if any colored drivers are visible.
- The instrument jaws must be closed to be introduced into the cavity through a trocar of the appropriate size.
- When placing the instrument through the trocar or incision, avoid advancing the firing trigger accidentally as this action might activate the lockout. If this occurs, the instrument will not allow the anvil release button to reopen the instrument jaws. To recover from this condition, remove the instrument, pull the manual release lever, then press the anvil release button and replace the cartridge.
- When dividing major vascular structures, be sure to adhere to the basic surgical principle of proximal and distal control.
- Prior to positioning the instrument jaws on tissue, make sure the jaws are in the open position.
- When placing the instrument on the tissue to be stapled, ensure that no hard obstruction (such as a clip) is included with the tissue inside the jaws. Stapling over an obstruction may result in an incomplete cut or improperly formed staples, or both.
- Ensure that the tissue lies flat and is positioned properly between the jaws. Any "bunching" of tissue along the reload, particular in the crotch of the jaws, may result in an incomplete staple line.
- If the closing trigger (1) is difficult to lock, **reposition the instrument and take a smaller amount of tissue.** (See **Contraindications** for appropriate reload selection.)
- The Endoscopic Linear Cutter is a **multiple stroke firing device.** Three complete strokes of the firing trigger will advance the staple line a full 60 mm and automatically return the knife blade. The manual firing release lever will return the knife blade and end the staple line before the full 60 mm staple line is applied.
- Before removing the instrument, be sure tissue is cleared from the jaws and then close the jaws.
- After removing the instrument, examine the staple lines for pneumostasis/hemostasis and proper staple closure. If pneumostasis/hemostasis is not present, appropriate techniques should be used to achieve pneumostasis/hemostasis.
- The instrument may be reloaded during a single procedure. Do not load the instrument more than 12 times for a total of 12 firings per instrument.
- The firing trigger (2) and closing trigger (1) must be in the open position during reloading.
- Prior to reloading the instrument, rinse the anvil and cartridge jaw in sterile solution and then wipe the anvil and cartridge jaw to clean any formed but unused staples from the instrument. Do not use the instrument until it has been visually inspected to confirm there are no staples on the anvil and cartridge jaw.
- If the firing mechanism becomes inoperative, **do not** refire the instrument. (Remove and discard the instrument.)
- If the clamping mechanism becomes inoperative and the jaws do not clamp on tissue, do not fire the instrument. (Remove and discard the instrument and reload.)
- Once the knife blade has been returned either manually or automatically, the same cartridge may not be used. If reinitiation of firing is resumed, the instrument will lock out. If resistance is felt, stop, remove the instrument, and pull the manual release lever; then press the anvil release button and replace the cartridge. Firing through the lockout mechanism will break the instrument.
- When using a tissue or staple line buttressing material, the instructions of the manufacturer of the buttress material should be followed. The use of staple line buttressing materials with the instrument may require an increased force to fire and may reduce the number of firings.
- Crossing of staple lines may reduce the number of firings.
- Selection of the appropriate staple cartridge should be based upon the combined thicknesses of both the tissue and the staple.
- If the jaws do not automatically open after the anvil release button is pressed, first ensure that the knife is in the retracted position by verifying that the 3-stroke indicator or knife blade indicator is in the starting position. If the 3-stroke indicator or knife blade indicator is not in the starting position, pull the manual firing release lever until the 3-stroke indicator or knife blade indicator returns to the starting position. If the jaws do not open at this point, then gently pull the closing trigger (1) upward (away from handle) until both firing and closing triggers return to their original positions.
- Instruments or devices which come into contact with bodily fluids may require special disposal handling to prevent biological contamination.
- This device is packaged and sterilized for single use only. Do not reuse, reprocess or resterilize. Reuse, reprocessing, or resterilization may compromise the structural integrity of the device and/or lead to device failure that in turn may result in patient injury, illness or death. Also, reprocessing or resterilization of single use devices may create a risk of contamination and/or cause patient infection or cross-infection, including, but not limited to, the transmission of infectious disease(s) from one patient to another. Contamination of the device may lead to injury, illness, or death of the patient.

How Supplied

The ECHELON 60 Endoscopic Linear Cutters are supplied sterile for single patient use. Discard after use.

This page should be blank.

STERILE R	Sterilized by Irradiation. Sterility Guaranteed Unless Package Opened or Damaged. Do Not Resterilize.
	See Instructions For Use
	Single Patient Use
LOT	Lot
	Use Until Date
Rx Only	Caution: Federal (USA) law restricts this device to sale by or on the order of a physician.
	Manufacturer

This page should be blank.

REF
EC60, SC60, LONG60

REVISIONS			
LTR	CAF NO.	CHNG	DATE
A			

PRODUCT CODE	ARTWORK NUMBER	COMPONENT NUMBER
EC60, SC60, LONG60	A85560P00	P40493P02

ETHICON ENDO-SURGERY, INC.

CONFIDENTIAL - NOT TO BE REPRODUCED OR USED IN ANY WAY WITHOUT WRITTEN ETHICON ENDO-SURGERY, INC. APPROVAL, CINCINNATI, OH

BLACK

ETHICON ENDO-SURGERY, INC.
a Johnson & Johnson company

ETHICON ENDO-SURGERY, INC. ©ETHICON ENDO-SURGERY, INC. 2004
Cincinnati, OH 45242-2839 USA P40493P02

73

ENDOCUTTER 60 mm

Endoscopic Linear Cutter - Straight

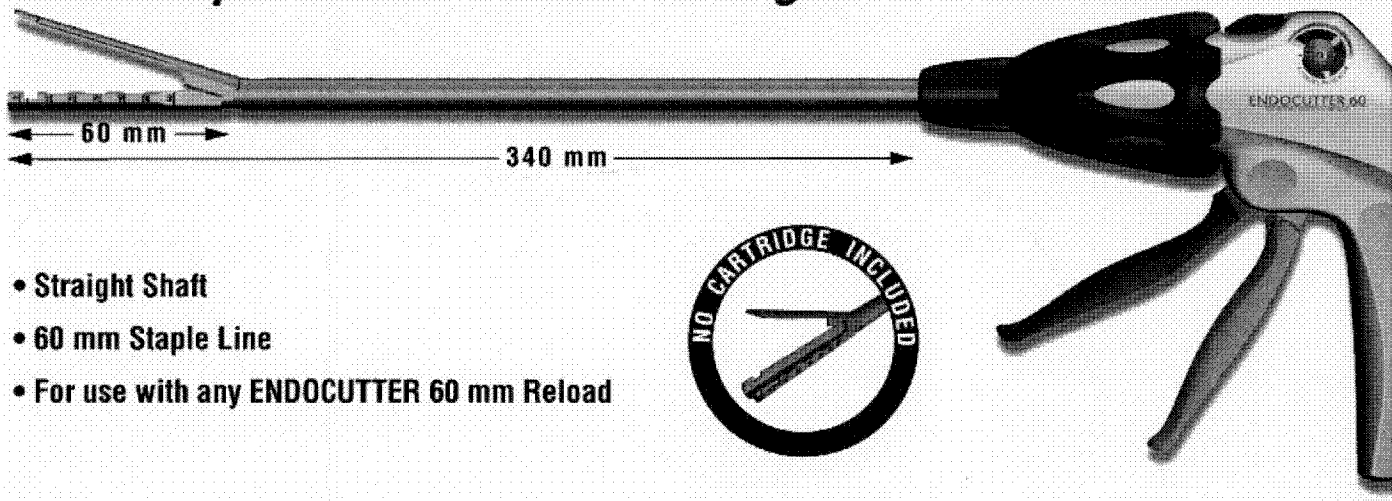

- Straight Shaft
- 60 mm Staple Line
- For use with any ENDOCUTTER 60 mm Reload

ETHICON ENDO-SURGERY, INC.
a Johnson & Johnson company

REF

scopic Linear Cutter - Straight
ge Included • Straight Shaft • 60 mm Staple Line
th any ENDOCUTTER 60 mm Reload

scopic Linear Cutter - Straight
ge Included • Straight Shaft • 60 mm Staple Line
th any ENDOCUTTER 60 mm Reload

scopic Linear Cutter - Straight
ge Included • Straight Shaft • 60 mm Staple Line
th any ENDOCUTTER 60 mm Reload

scopic Linear Cutter - Straight
ge Included • Straight Shaft • 60 mm Staple Line
th any ENDOCUTTER 60 mm Reload

scopic Linear Cutter - Straight
ge Included • Straight Shaft • 60 mm Staple Line
th any ENDOCUTTER 60 mm Reload

scopic Linear Cutter - Straight
ge Included • Straight Shaft • 60 mm Staple Line
th any ENDOCUTTER 60 mm Reload

oscopic Linear Cutter - Straight
ge Included • Straight Shaft • 60 mm Staple Line
th any ENDOCUTTER 60 mm Reload
stration and symbol translations

Patient Use See Instructions For Use Rx Only

erilized by Irradiation. Sterility Guaranteed Unless
ckage Opened or Damaged. **Do Not Resterilize.**

DO-SURGERY, INC. ©ETHICON ENDO-SURGERY, INC. 2004
H 45242-2839 USA

ENDOCUTTER 60 mm
Endoscopic Linear Cutter - Straight

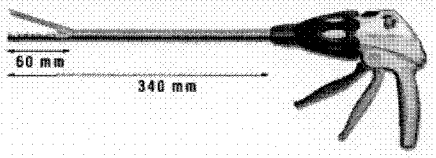

ETHICON ENDO-SURGERY, INC.
a Johnson & Johnson company

1

REF EC60

c Linear Cutter - Straight
c Linear Cutter - Straight
c Linear Cutter - Straight
Rx Only

Endoscopic Linear Cutter - Straight
Endoscopic Linear Cutter - Straight
Endoscopic Linear Cutter - Straight
Endoscopic Linear Cutter - Straight

c Linear Cutter - Straight
ed • Straight Shaft • 60 mm Staple Line
HELON 60 Reload

c Linear Cutter - Straight
ed • Straight Shaft • 60 mm Staple Line
HELON 60 Reload

c Linear Cutter - Straight
ed • Straight Shaft • 60 mm Staple Line
HELON 60 Reload

c Linear Cutter - Straight
ed • Straight Shaft • 60 mm Staple Line
HELON 60 Reload

c Linear Cutter - Straight
d • Straight Shaft • 60 mm Staple Line
HELON 60 Reload

c Linear Cutter - Straight
d • Straight Shaft • 60 mm Staple Line
HELON 60 Reload

c Linear Cutter - Straight
d • Straight Shaft • 60 mm Staple Line
HELON 60 Reload

Use

See Instructions For Use

Rx Only

y Irradiation. Sterility Guaranteed Unless
pened or Damaged. **Do Not Resterilize.**

RY, INC. ©ETHICON ENDO-SURGERY, INC. 2004
839 USA

CE 0123

echelon 60

ENDOPATH® STAPLER

Endoscopic Linear Cutter - Straight

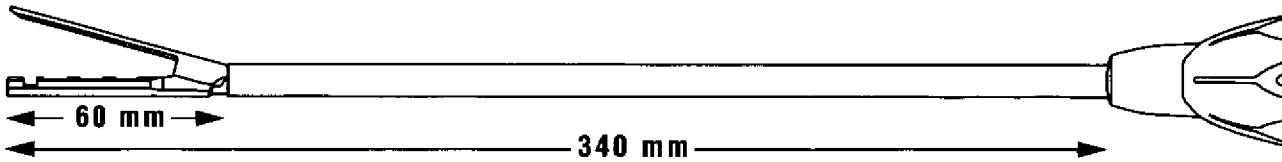

- **Straight Shaft**
- **60 mm Staple Line**
- **For use with any ECHELON 60 Reload**

ETHICON ENDO-SURGERY, INC.

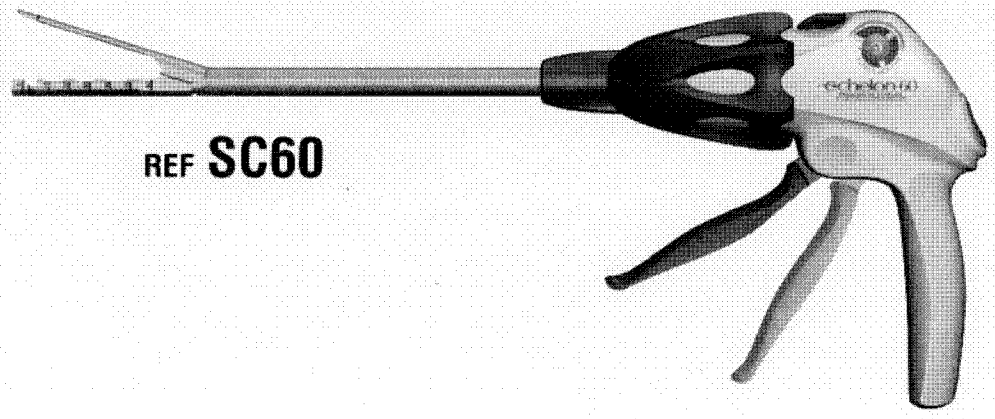

REF **SC60**

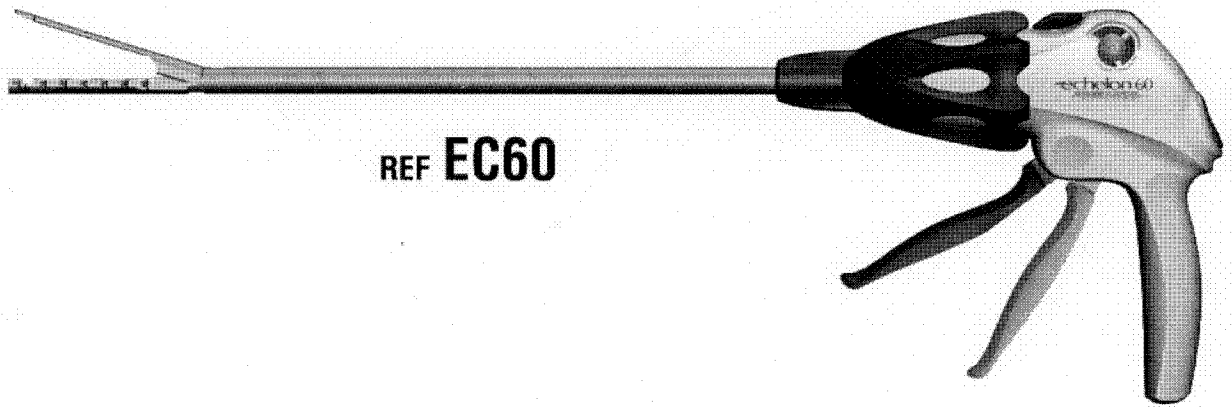

REF **EC60**

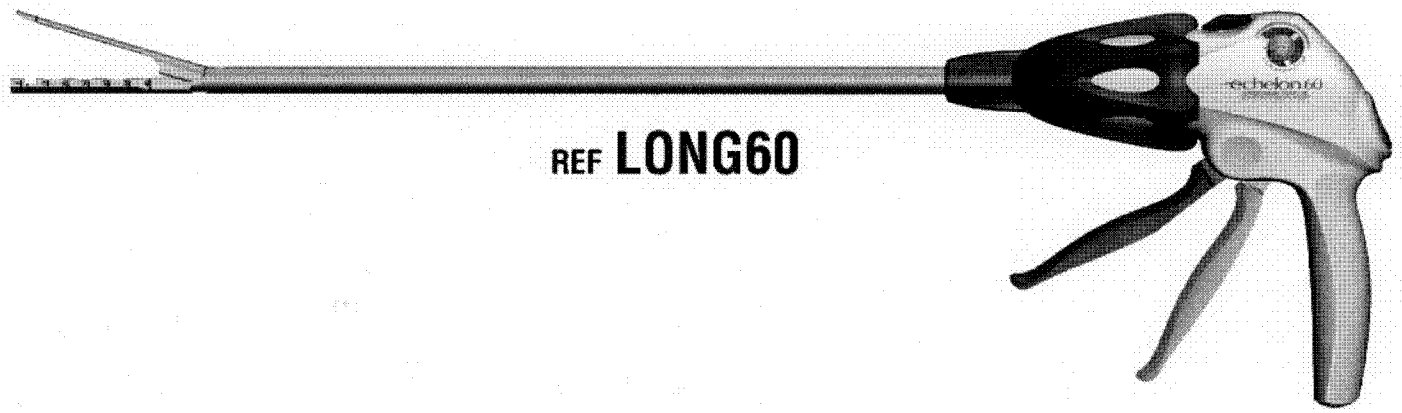

REF **LONG60**

A85561P00 EC60 Reload 510K.qxd 4/18/05 10:57 AM Page 1

echelon60

ENDOPATH® STAPLER

Endoscopic Linear Cutter Reload

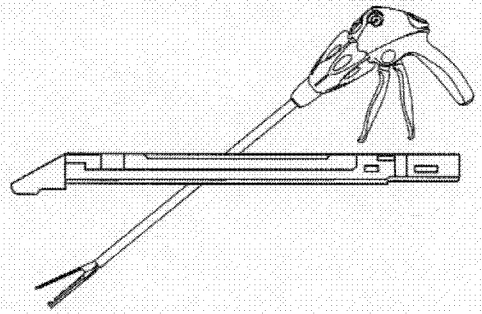

Draft INSTRUCTIONS

ETHICON ENDO-SURGERY, INC.
a Johnson & Johnson company

Instructions

77

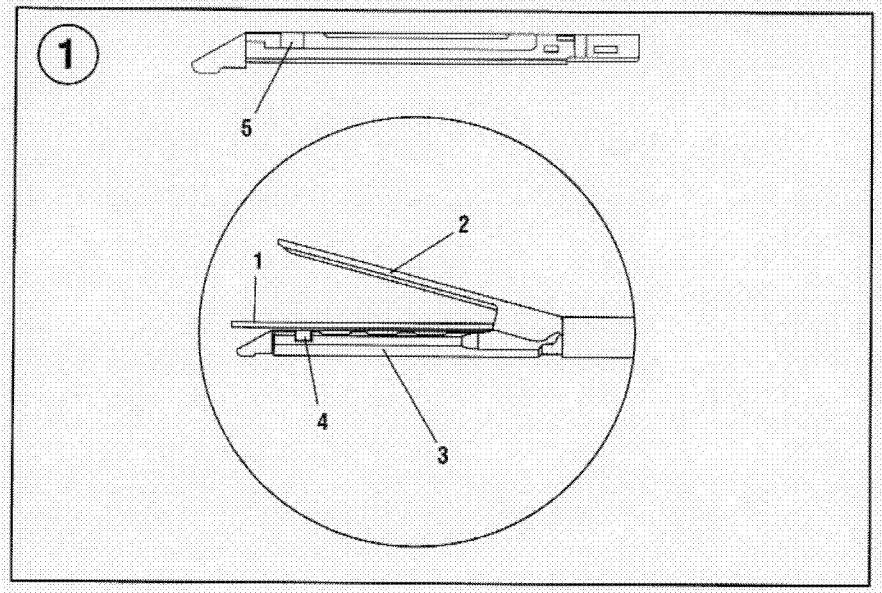

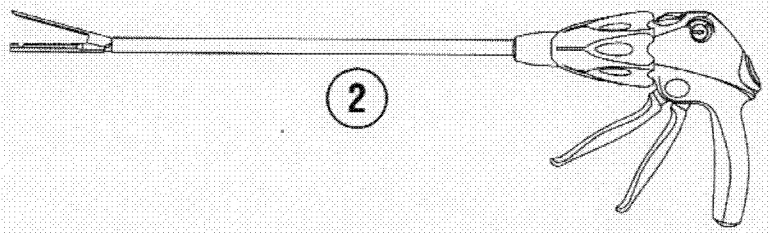

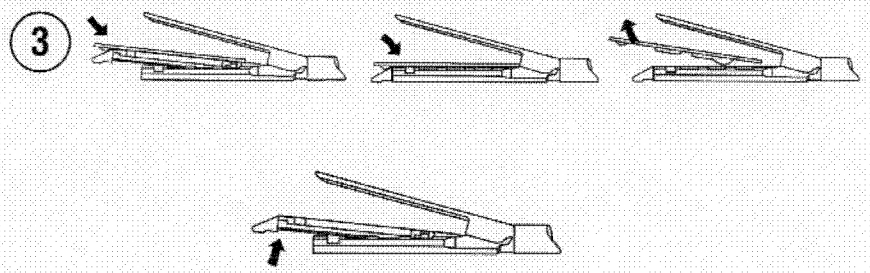

English

Please read all information carefully.

Failure to properly follow the instructions may lead to serious surgical consequences, such as leakage or disruption.

Important: This package insert is designed to provide instructions for use of the ECHELON 60 Endoscopic Linear Cutter Reloads. It is not a reference to surgical techniques.

Indications

The ECHELON 60 Endoscopic Linear Cutter – Straight, Compact ECHELON 60 Endoscopic Linear Cutter – Straight, and the Long ECHELON 60 Endoscopic Linear Cutter – Straight are intended for transection, resection, and/or creation of anastomoses. The instruments have application in multiple open or minimally invasive general, gynecologic, urologic, thoracic, and pediatric surgical procedures. They can be used with staple line or tissue buttressing materials.

Contraindications

- Do not use the instruments with white reload on any tissue that requires excessive force to compress to 1.0 mm or on any tissue that compresses easily to below 1.0 mm.
- Do not use the instruments with blue reload on any tissue that requires excessive force to compress to 1.5 mm or on any tissue that compresses easily to below 1.5 mm.
- Do not use the instruments with gold reload on any tissue that requires excessive force to compress to 1.8 mm or on any tissue that compresses easily to below 1.8 mm.
- Do not use the instruments with green reload on any tissue that requires excessive force to compress to 2.0 mm or on any tissue that compresses easily to below 2.0 mm.
- Do not use the instruments on ischemic or necrotic tissue.
- Do not use the instruments on the aorta.
- Do not use any linear cutter on major vessels without making provision for proximal and distal control.
- Do not use the instruments on solid organs, such as the liver or spleen, where attempted compression would be destructive.
- These instruments are not intended for use when surgical stapling is contraindicated.

Device Description

The ECHELON 60 Endoscopic Linear Cutter – Straight, Compact ECHELON 60 Endoscopic Linear Cutter – Straight, and the Long ECHELON 60 Endoscopic Linear Cutter – Straight are sterile, single patient use instruments that deliver staples while simultaneously dividing tissue between rows. ECHELON 60 instruments with white, blue, gold, and green reloads deliver two triple-staggered rows of staples. The instruments' safety lock-out feature is designed to prevent a used reload from being refired. The instruments have a staple line that is approximately 60 mm long and a cut line that is approximately 57 mm long. A staple retaining cap on the reload protects the staple leg points during shipping and transportation.

The instruments are shipped without a cartridge and must be loaded prior to use. Use only the indicated cartridges in the ECHELON 60 Endoscopic Linear Cutter instrument. ECHELON 60 Endoscopic Linear Cutter cartridges are interchangeable across all ECHELON 60 Endoscopic Linear Cutter family instrument codes. Do not use ECHELON 60 Endoscopic Linear Cutter family cartridges in an instrument other than an ECHELON 60 Endoscopic Linear Cutter family instrument.

Do not load the instrument more than 12 times for a maximum of 12 firings per instrument. The use of the instrument with staple line buttressing material may reduce the number of firings.

85561P00 EC60 Reload 510K.qxd 4/18/05 10:57 AM Page 4

ECHELON 60 Product Family

Instrument Code	Description	Shaft Length
EC60	ECHELON 60 Endoscopic Linear Cutter – Straight (does not contain a cartridge)	340 mm
SC60	Compact ECHELON 60 Endoscopic Linear Cutter – Straight (does not contain a cartridge)	280 mm
LONG60	Long ECHELON 60 Endoscopic Linear Cutter – Straight (does not contain a cartridge)	440 mm

Specifications for the ECHELON 60 family reloads follow:

Supported Instrument Codes: EC60, SC60, and LONG60

Reload Code	Staple Leg Length	Closed Staple Height	Number of Staples	Reload Color	Staple Rows
ECR60W	2.5 mm	1.0 mm	88	White	6
ECR60B	3.5 mm	1.5 mm	88	Blue	6
ECR60D	3.8 mm	1.8 mm	88	Gold	6
ECR60G	4.1 mm	2.0 mm	88	Green	6

Illustration and Nomenclature (Illustration 1)
1. Staple Retaining Cap
2. Anvil Jaw
3. Cartridge Jaw
4. Reload Alignment Slot
5. Cartridge Alignment Tab

Instructions for Use
Verify compatibility of all instruments and accessories prior to using the instrument (refer to **Warnings and Precautions**).

Loading the Instrument
1 Using sterile technique, remove the instrument and reload from their respective packages. To avoid damage, do not flip the instrument or reload into the sterile field.
2 Prior to loading, ensure the instrument is in the open position. (Illustration 2)

English

3 Examine the reload for the presence of a staple retaining cap. If the retaining cap is not in place, discard the reload.
Note: Selection of the appropriate staple cartridge should be based upon the combined thicknesses of both the tissue and the staple line buttressing materials.
4 Insert the new reload by sliding it against the bottom of the cartridge jaw until the cartridge alignment tab stops in the reload alignment slot. Snap the reload securely in place. Remove the staple retaining cap and discard. (Note: The staple retaining cap ensures proper staple orientation and protects the staple leg points during shipping and transportation.) The instrument is now loaded and ready for use. (Illustration 3)
Caution: After removing the staple retaining cap, observe the surface of the new reload. The reload must be replaced with another reload if any colored drivers are visible. (If colored drivers are visible, the reload may not contain staples.)
5 Refer to the ECHELON 60 Endoscopic Linear Cutter insert for instructions for using the instrument after it is loaded.

Reloading the Instrument
1 Using sterile technique, remove the reload from the package. To avoid damage, do not flip the reload into the sterile field.
2 Prior to reloading, ensure the instrument is in the open position. (Illustration 2)
3 Push upward (toward the anvil) to unsnap the reload from the cartridge jaw. Discard the used reload. (Illustration 4)
Warning: Prior to reloading the instrument, rinse the anvil and cartridge jaw in sterile solution and then wipe the anvil and cartridge jaw to clean any formed but unused staples from the instrument. Do not use the instrument until it has been visually inspected to confirm there are no staples on the anvil and cartridge jaw.
4 Examine the new reload for the presence of a staple retaining cap. If the retaining cap is not in place, discard the reload.
Note: Selection of the appropriate staple cartridge should be based upon the combined thicknesses of both the tissue and the staple line buttressing materials.
5 Insert the new reload by sliding it against the bottom of the cartridge jaw until the cartridge alignment tab stops in the reload alignment slot. Snap the reload securely in place. Remove the staple retaining cap and discard. The instrument is now reloaded and ready for use. (Illustration 3)
Caution: After removing the staple retaining cap, observe the surface of the new reload. The reload must be replaced with another reload if any colored drivers are visible. (If colored drivers are visible, the reload may not contain staples.)
6 Refer to the ECHELON 60 Endoscopic Linear Cutter for instructions for using the instrument after it is loaded.

Warnings and Precautions
- Minimally invasive procedures should be performed only by persons having adequate training and familiarity with minimally invasive techniques. Consult medical literature relative to techniques, complications, and hazards prior to performance of any minimally invasive procedure.
- Minimally invasive instruments may vary in diameter from manufacturer to manufacturer. When minimally invasive instruments and accessories from different manufacturers are employed together in a procedure, verify compatibility prior to initiation of the procedure.
- A thorough understanding of the principles and techniques involved in laser, electrosurgical, and ultrasonic procedures is essential to avoid shock and burn hazards to both patient and medical personnel and damage to the device or other medical instruments. Ensure that electrical insulation or grounding is not compromised. **Do not** immerse electrosurgical instruments in liquid unless the

instruments are designed and labeled to be immersed.

- Before using, remove the staple retaining cap and observe the surface of the reload. The reload must be replaced with another reload if any colored drivers are visible.
- The instrument jaws must be closed to be introduced into the cavity through a trocar of the appropriate size.
- When placing the instrument through the trocar or incision, avoid advancing the firing trigger accidentally as this action might activate the lockout. If this occurs, the instrument will not allow the anvil release button to reopen the instrument jaws. To recover from this condition, remove the instrument, pull the manual release lever; then press the anvil release button and replace the cartridge.
- When dividing major vascular structures, be sure to adhere to the basic surgical principle of proximal and distal control.
- Prior to positioning the instrument jaws on tissue, make sure the jaws are in the open position.
- When placing the instrument on the tissue to be stapled, ensure that no hard obstruction (such as a clip) is included with the tissue inside the jaws. Stapling over an obstruction may result in an incomplete cut or improperly formed staples, or both.
- Ensure that the tissue lies flat and is positioned properly between the jaws. Any "bunching" of tissue along the reload, particular in the crotch of the jaws, may result in an incomplete staple line.
- If the closing trigger (1) is difficult to lock, **reposition the instrument and take a smaller amount of tissue.** (See **Contraindications** for appropriate reload selection.)
- The ECHELON 60 Endoscopic Linear Cutter is a **multiple stroke firing device.** Three complete strokes of the firing trigger will advance the staple line a full 60 mm and automatically return the knife blade. The manual firing release lever will return the knife blade and end the staple line before the full 60 mm staple line is applied.
- Before removing the instrument, be sure tissue is cleared from the jaws and then close the jaws.
- After removing the instrument, examine the staple lines for pneumostasis/hemostasis and proper staple closure. If pneumostasis/hemostasis is not present, appropriate techniques should be used to achieve pneumostasis/hemostasis.
- The instrument may be reloaded during a single procedure. Do not load the instrument more than 12 times for a total of 12 firings per instrument.
- The firing trigger (2) and closing trigger (1) must be in the open position during reloading.
- Prior to reloading the instrument, rinse the anvil and cartridge jaw in sterile solution and then wipe the anvil and cartridge jaw to clean any formed but unused staples from the instrument. Do not use the instrument until it has been visually inspected to confirm there are no staples on the anvil and cartridge jaw.
- If the firing mechanism becomes inoperative, **do not** refire the instrument. (Remove and discard the instrument.)
- If the clamping mechanism becomes inoperative and the jaws do not clamp on tissue, do not fire the instrument. (Remove and discard the instrument and reload.)
- Once the knife blade has been returned either manually or automatically, the same cartridge may not be used. If re-initiation of firing is resumed, the instrument will lock out. If resistance is felt, stop and replace the cartridge. Firing through the lockout mechanism will break the instrument.
- When using a tissue or staple line buttressing material, the instructions of the manufacturer of the buttress material should be followed. The use of staple line buttressing materials with the instrument may require an increased force to fire and may reduce the number of firings.
- Crossing of staple lines may reduce the number of firings.
- Selection of the appropriate staple cartridge should be based upon the combined thicknesses of both the tissue and the staple.
- If the jaws do not automatically open after the anvil release button is pressed, first ensure that the knife is in the retracted position by verifying that the 3-stroke indicator or knife blade indicator is in

the starting position. If the 3-stroke indicator or knife blade indicator is not in the starting position, pull the manual firing release lever until the 3-stroke indicator or knife blade indicator returns to the starting position. If the jaws do not open at this point, then gently pull the closing trigger (1) upward (away from handle) until both firing and closing triggers return to their original positions.
- Instruments or devices which come into contact with bodily fluids may require special disposal handling to prevent biological contamination.
- This device is packaged and sterilized for single use only. Do not reuse, reprocess or resterilize. Reuse, reprocessing, or resterilization may compromise the structural integrity of the device and/or lead to device failure that in turn may result in patient injury, illness or death. Also, reprocessing or resterilization of single use devices may create a risk of contamination and/or cause patient infection or cross-infection, including, but not limited to, the transmission of infectious disease(s) from one patient to another. Contamination of the device may lead to injury, illness, or death of the patient.

English

How Supplied

The ECHELON 60 Endoscopic Linear Cutter Reloads are supplied sterile for single patient use. Discard after use.

A85561P00 EC60 Reload 510K.qxd 4/18/05 10:57 AM Page 15

STERILE R	Sterilized by Irradiation. Sterility Guaranteed Unless Package Opened or Damaged. Do Not Resterilize.
	See Instructions For Use
	Single Patient Use
LOT	Lot
	Use Until Date
Rx Only	Caution: Federal (USA) law restricts this device to sale by or on the order of a physician.
	Manufacturer

This page should be blank.

REF

ECR60W, ECR60B, ECR60D, ECR60G

ETHICON ENDO-SURGERY, INC.
a Johnson & Johnson company

ETHICON ENDO-SURGERY, INC. ©ETHICON ENDO-SURGERY, INC. 2004
Cincinnati, OH 45242-2839 USA

P40489P02

REVISIONS			
LTR	CAF NO.	CHNG	DATE

PRODUCT CODE	ARTWORK NUMBER	COMPONENT NUMBER
ECR60W, ECR60B, ECR60D, ECR60G	A85561P00	P40489P02

ETHICON ENDO-SURGERY, INC.

CONFIDENTIAL. NOT TO BE REPRODUCED OR USED IN ANY WAY WITHOUT WRITTEN ETHICON ENDO-SURGERY, INC. APPROVAL. CINCINNATI, OH

BLACK

Draft Cartridge Carton

ENDOCUTTER 60 mm

ENDOCUTTER 60 mm

Endoscopic Linear Cutter Reloads
White 2.5 mm, 6 rows
Endoscopic Linear Cutter Reloads
White 2.5 mm, 6 rows
Endoscopic Linear Cutter Reloads
White 2.5 mm, 6 rows
Endoscopic Linear Cutter Reloads
White 2.5 mm, 6 rows
Endoscopic Linear Cutter Reloads
White 2.5 mm, 6 rows
Endoscopic Linear Cutter Reloads
White 2.5 mm, 6 rows
12 ENDOCUTTER 60 mm
Endoscopic Linear Cutter Reloads
White 2.5 mm, 6 rows

A93502P00

Endoscopic Linear Cutter Reloads
White 2.5 mm, 6 rows

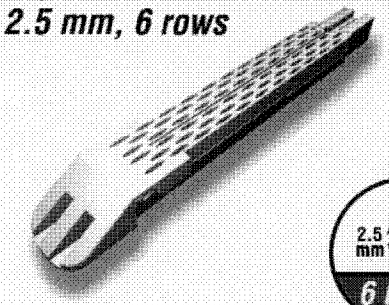

2.5 mm
6 Rows

ETHICON ENDO-SURGERY, INC.
a Johnson & Johnson company

Single Patient Use
See Instructions For Use
Rx Only

STERILE R Sterilized by Irradiation. Sterility Guaranteed Unless Package Opened or Damaged. **Do Not Resterilize.**

ETHICON ENDO-SURGERY, INC. ©EES, INC. 2004
Cincinnati, OH 45242-2839 USA

12

REF **ECR60W**

Endoscopic Linear Cutter Reloads
White 2.5 mm, 6 rows

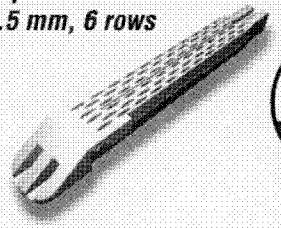

2.5 mm
6 Rows

ETHICON ENDO-SURGERY, INC.
a Johnson & Johnson company

12

STERILE R Rx Only

REF **ECR60W**

REF **ECR60G**

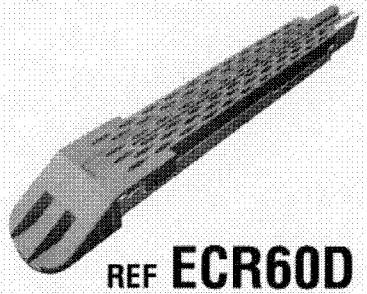

REF **ECR60D**

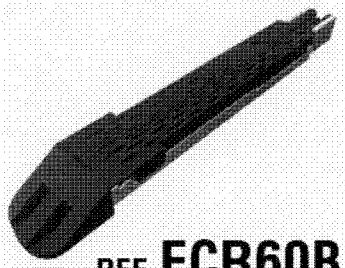

REF **ECR60B**

Draft
Cartridge Tyvek

84

Section M
Marketed Device Labeling

Labeling for the predicate device, ENDOPATH® Endocutter (Product Code TSB45 (K020779) is provided.

Marketed Device Instructions

ENDOPATH®

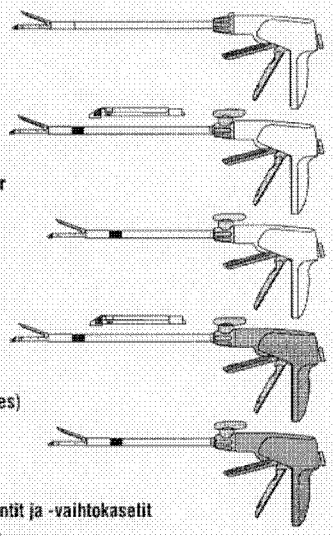

ETS45, ETS-Flex45, and ETS Compact-Flex45 Linear Cutters and ETS-Flex45 and ETS Compact-Flex45 No-Knife Articulating Linear Staplers

Agrafeuses linéaires coupantes ETS45, ETS-Flex45 et ETS Compact-Flex45 et Agrafeuses linéaires articulées sans couteau ETS-Flex45 et ETS Compact-Flex45

ETS45, ETS-Flex45 und ETS Compact-Flex45 Linear Cutter sowie ETS-Flex45 und ETS Compact-Flex45 abwinkelbare Linear Stapler ohne Messer

Suturatrici Linear Cutter ETS45, ETS-Flex45 ed ETS Compact-Flex45 e Suturatrici lineari articolate senza bisturi ETS-Flex45 ed ETS Compact-Flex45

Agrafadores lineares com corte ETS45, ETS-Flex45 e ETS Compact-Flex45 e Agrafadores lineares articulados sem corte ETS-Flex45 e ETS Compact-Flex45

Cortadoras lineales ETS45, ETS-Flex45 y ETS Compact-Flex45 y Grapadoras lineales articuladas sin bisturí ETS-Flex45 y ETS Compact-Flex45

ETS45, ETS-Flex45 en ETS Compact-Flex45 lineaire cutters en ETS-Flex45 en ETS Compact-Flex45 articuleerbare lineaire staplers (zonder mes)

ETS45, ETS-Flex45 og ETS Compact-Flex45 lineært skærende staplere og ETS-Flex45 og ETS Compact-Flex45 artikulerende lineære staplere uden kniv

ETS45-, ETS-Flex45- ja ETS Compact-Flex45 -suorasulkuleikkurit ja Terättömät niveletyt ETS-Flex45- ja ETS Compact-Flex45 -suorasulkuinstrumentit ja -vaihtokasetit

Ευθύγραμμοι κοπτοράπτες ETS45, ETS-Flex45 και ETS Compact-Flex45 και Αρθρωτά ευθύγραμμα συρραπτικά χωρίς λάμα ETS-Flex45 και ETS Compact-Flex45

ETS45, ETS-Flex45 och ETS Compact-Flex45 linjära skärande stapler samt ETS-Flex45 och ETS Compact-Flex45 artikulerande linjära stapler utan kniv

Liniowe staplery tnące ETS45, ETS-Flex45 i ETS Compact-Flex45 oraz Liniowe staplery z połączeniem przegubowym, bez noża, ETS-Flex45 i ETS Compact-Flex45

ETS45, ETS-Flex45 és ETS Compact-Flex45 lineáris vágók, valamint ETS-Flex45 és ETS Compact-Flex45 kés nélküli csuklós lineáris kapcsozók

Lineární frézy ETS45, ETS-Flex45 a ETS Compact-Flex45 a Lineární svorkovače s kloubem bez nožů ETS-Flex45 a ETS Compact-Flex45

Lineárne zošívačky ETS45, ETS-Flex45 a ETS Compact-Flex45 a Lineárne svorkovače bez noža s kĺbom ETS-Flex45 a ETS Compact-Flex45

エンドパス*

ETS45、ETS Flex45、ETS Compact-Flex45リニヤーカッターおよび
ETS Flex45、ETS Compact-Flex45（ナイフ無）アーティキュレート型リニヤーステイプラー

Please read all information carefully.

Failure to properly follow the instructions may lead to serious surgical consequences, such as leakage or disruption.

Important: This package insert is designed to provide instructions for use of the ENDOPATH® ETS45 Endoscopic Linear Cutters, the ETS-Flex45 Endoscopic Articulating Linear Cutters, the ETS Compact-Flex45 Articulating Linear Cutters, the ETS-Flex45 No-Knife Articulating Linear Staplers and ETS Compact-Flex45 No-Knife Articulating Linear Staplers. It is not a reference to surgical techniques.

ETHICON ENDO-SURGERY, INC.
a Johnson & Johnson company

Instructions, Instructions, Gebrauchsanweisung, Istruzioni, Instruções, Instrucciones, Gebruiksaanwijzing, Brugsvejledning, Ohje, Οδηγίες, Bruksanvisning, Instrukcja, Utasítások, Návod k použití, Návod, 添付文書

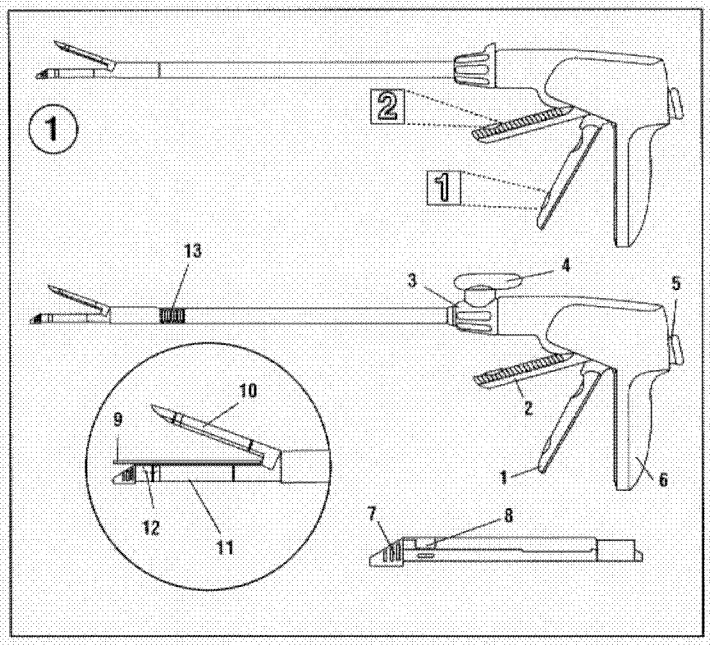

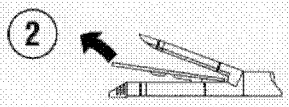

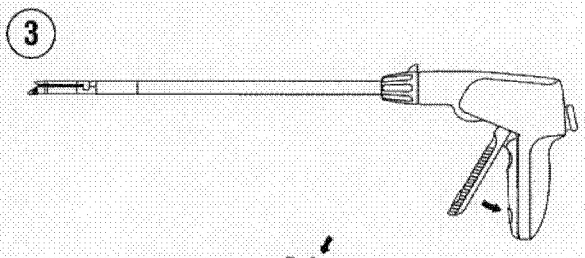

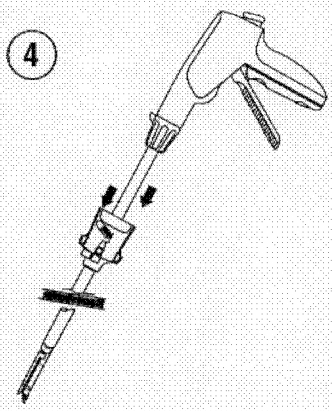

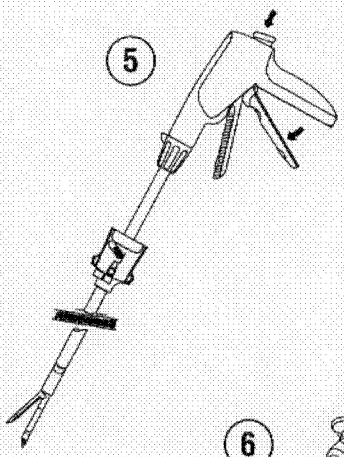

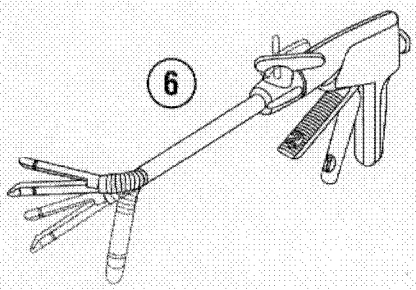

2

87

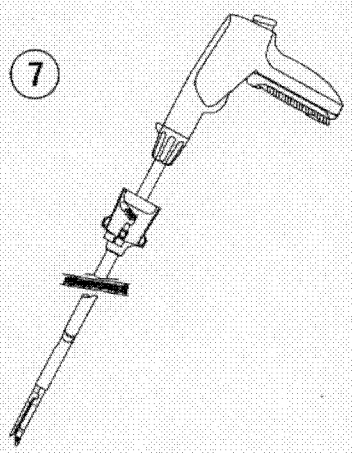
7

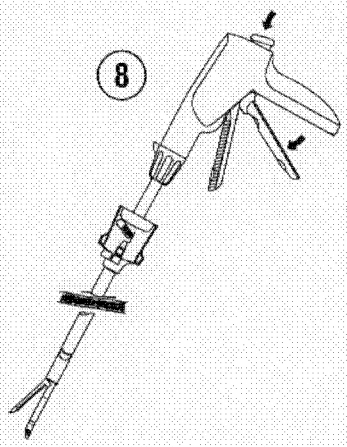
8

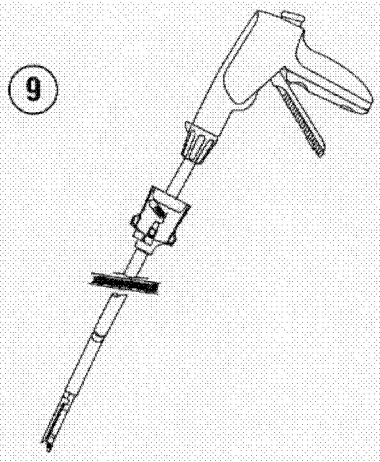
9

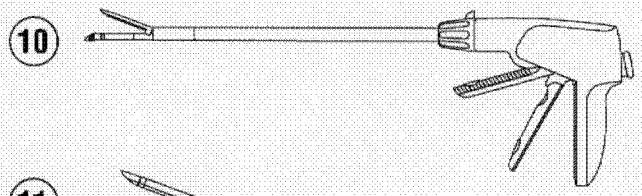
10

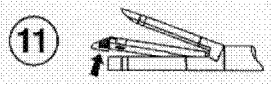
11

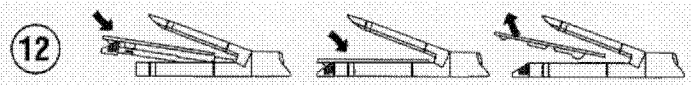
12

Indications

The ENDOPATH ETS45 Endoscopic Linear Cutters, the ETS-Flex45 Endoscopic Articulating Linear Cutters, and the ETS Compact-Flex45 Articulating Linear Cutters are intended for transection, resection, and/or creation of anastomoses. The instruments have application in multiple open or minimally invasive general, gynecologic, urologic (including radical prostatectomy), thoracic, and pediatric surgical procedures. They can be used with staple line or tissue buttressing materials such as bovine pericardium.

The ENDOPATH ETS-Flex45 No-Knife Articulating Linear Staplers and the ETS Compact-Flex45 No-Knife Articulating Linear Staplers are intended for transection, resection, and/or creation of anastomoses. The instruments have application in multiple open or minimally invasive general, gynecologic, urologic (including radical prostatectomy), thoracic, and pediatric surgical procedures. They can be used with staple line or tissue buttressing materials such as bovine pericardium.

Contraindications

- Do not use the instruments with green reload on any tissue that requires excessive force to compress to 2.0 mm or on any tissue that compresses easily to below 2.0 mm.
- Do not use the instruments with blue reload on any tissue that requires excessive force to compress to 1.5 mm or on any tissue that compresses easily to below 1.5 mm.
- Do not use the instruments with white reload on any tissue that requires excessive force to compress to 1.0 mm or on any tissue that compresses easily to below 1.0 mm.
- Do not use the instruments with gray reload on any tissue that requires excessive force to compress to 0.85 mm or any tissue that compresses easily to below 0.85 mm.
- Do not use the instruments on ischemic or necrotic tissue.
- Do not use the instruments on the aorta.
- Do not use any linear cutter on major vessels without making provision for proximal and distal control.
- Do not use the instruments on solid organs, such as the liver or spleen, where attempted compression would be destructive.
- These instruments are not intended for use when surgical stapling is contraindicated.

Device Descriptions

The ENDOPATH ETS45, ETS-Flex45, and ETS Compact-Flex45 Linear Cutters are sterile, single patient use instruments that deliver staples while simultaneously dividing tissue between rows. ETS45 instruments with blue (standard) reloads deliver two double- or triple- staggered rows of staples; ETS45 instruments with green (thick) reloads deliver two double-staggered rows of staples only; ETS45 instruments with white (vascular) reloads deliver two triple-staggered rows of staples; and, ETS45 instruments with gray (mesenteric) reloads deliver two triple-staggered rows of staples. The instruments' safety lock-out feature is designed to prevent a used reload from being refired. The instruments have a staple line that is approximately 45 mm long and a cut line that is approximately 41 mm long. A staple retaining cap on the reload protects the staple leg points during shipping and transportation. An articulation lever on the ETS-Flex45 and ETS Compact-Flex45 Articulating Linear Cutters enables bilateral movement of the instrument jaws.

The ENDOPATH ETS-Flex45 and ETS Compact-Flex45 No-Knife Linear Staplers are sterile, single patient use instruments. ETS45 instruments with blue (standard) reloads deliver two double- or triple-staggered rows of staples; ETS45 instruments with green (thick) reloads deliver two double-staggered rows of staples only; ETS45 instruments with white (vascular) reloads deliver two triple-staggered rows of staples; and, ETS45 instruments with gray (mesenteric) reloads deliver two triple-staggered rows of staples. The instruments' safety lock-out feature is designed to prevent a used reload from being refired. The instruments have a staple line that is approximately 45 mm long. A staple retaining cap on the reload protects the staple leg points during shipping and transportation. An articulation lever on the instruments enables bilateral movement of the instrument jaws.

The instruments are loaded with a mesenteric, gray reload; a vascular, white reload; a standard, blue reload; or a thick tissue, green reload. ETS45 reloads are interchangeable across all ETS45 family instrument codes. For example, a TSW45 instrument, which is provided with a TR45W reload, may be reloaded with either the TR45B, the TR45G, the TR45W, the 5R45B, or the 6R45M.

Do not reload the instruments more than seven times for a maximum of eight firings per instrument. The use of the instrument with staple line buttressing material may reduce the number of firings. Use only the indicated reloads in the ETS45 instrument. Do not use ETS45 family reloads in an instrument other than an ETS45 family instrument.

ETS45 Product Family

Instrument Code	Description	Shaft Length
TSW45	ETS45 Endoscopic Linear Cutter, Vascular	340 mm
TSB45	ETS45 Endoscopic Linear Cutter, Standard	340 mm
TSG45	ETS45 Endoscopic Linear Cutter, Thick Tissue	340 mm
6SB45	ETS45 Endoscopic Linear Cutter, Standard (6 Rows)	340 mm
ATW45	ETS-Flex45 Endoscopic Articulating Linear Cutter, Vascular	340 mm
ATB45	ETS-Flex45 Endoscopic Articulating Linear Cutter, Standard	340 mm
ATG45	ETS-Flex45 Endoscopic Articulating Linear Cutter, Thick Tissue	340 mm
6TB45	ETS-Flex45 Endoscopic Articulating Linear Cutter, Standard (6 Rows)	340 mm
SCW45	ETS Compact-Flex45 Articulating Linear Cutter, Vascular	240 mm
SCB45	ETS Compact-Flex45 Articulating Linear Cutter, Standard	240 mm
SCG45	ETS Compact-Flex45 Articulating Linear Cutter, Thick Tissue	240 mm
6CB45	ETS Compact-Flex45 Articulating Linear Cutter, Standard (6 Rows)	240 mm

English

NAW45	ETS-Flex45 No-Knife Articulating Linear Stapler, Vascular	340 mm
NAB45	ETS-Flex45 No-Knife Articulating Linear Stapler, Standard	340 mm
NAG45	ETS-Flex45 No-Knife Articulating Linear Stapler, Thick Tissue	340 mm
NSW45	ETS Compact-Flex45 No-Knife Articulating Linear Stapler, Vascular	240 mm
NSB45	ETS Compact-Flex45 No-Knife Articulating Linear Stapler, Standard	240 mm
NSG45	ETS Compact-Flex45 No-Knife Articulating Linear Stapler, Thick Tissue	240 mm
LONG45A	ETS-Flex45 Endoscopic Articulating Long Linear Cutter, No Reload	440 mm

Specifications for ETS45 family reloads follow:

Supported Instrument Codes: TSW45, TSB45, TSG45, ATW45, ATB45, ATG45, SCW45, SCB45, SCG45, NAB45, NAG45, NAW45, NSW45, NSB45, NSG45, LONG45A, 6SB45, 6TB45, 6CB45.

Reload Code	Description	Staple Leg Length	Closed Staple Height	Number of Staples	Reload Color	Staple Rows
TR45G	Thick	4.1 mm	2.0 mm	44	Green	4
TR45B	Standard	3.5 mm	1.5 mm	44	Blue	4
6R45B	Standard	3.5 mm	1.5 mm	66	Blue	6
TR45W	Vascular/Thin	2.5 mm	1.0 mm	66	White	6
6R45M	Mesenteric/Thin	2.0 mm	0.85 mm	66	Gray	6

Illustration and Nomenclature (Illustration 1)

1. Closing Trigger (1)
2. Firing Trigger (2)
3. Rotating Knob
4. Articulation Lever
5. Anvil Release Button
6. Handle
7. Reload Gripping Surface
8. Reload Alignment Tab
9. Staple Retaining Cap
10. Anvil Jaw
11. Cartridge Jaw
12. Reload Alignment Notch
13. Articulation Joint

Instructions for Use

Verify compatibility of all instruments and accessories prior to using the instrument (refer to **Warnings and Precautions**).

Note: The following instruments cut and staple: TSW45, TSB45, TSG45, ATW45, ATB45, ATG45, SCW45, SCB45, SCG45, LONG45A, 6SB45, 6TB45, 6CB45. The following instruments perform stapling only: NAB45, NAG45, NAW45, NSW45, NSB45, NSG45.

1 Using sterile technique, remove the instrument from the package. To avoid damage, do not flip the instrument into the sterile field.

2 Remove the staple retaining cap from the reload. Discard the staple retaining cap. (Illustration 2)
Note: The staple retaining cap ensures proper staple orientation and protects the staple leg points during shipping and transportation.
Note: The LONG45A instrument is not preloaded. Remove the protective cover from the tip of the instrument before loading the instrument (see **Reloading the Instrument**).

3 Close the jaws of the instrument by squeezing the closing trigger (light gray and labeled with a Number "1") until it locks in place. An audible click indicates that the closing trigger is locked. (Illustration 3)
Caution: Do not squeeze the firing trigger (dark gray and labeled with a Number "2") at this time.

4 Introduce the instrument into the body cavity through the appropriate trocar or incision. (Illustration 4)
Caution: The instrument jaws must be closed to be introduced into the cavity through a trocar of the appropriate size.

5 Once in the cavity, press the anvil release button to reopen the instrument jaws and return the closing trigger (1) to its original position. (Illustration 5)

6 To articulate the instrument (articulating instruments only), turn the articulation lever until it comes to a stop in either direction. (Illustration 6)
Caution: Tissue damage or trauma may result if the instrument is articulated after closing on tissue.
Caution: Attempting to force the articulation lever beyond its stop in either direction will result in instrument damage.

7 After positioning the instrument jaws around the tissue to be stapled, close the jaws by squeezing the closing trigger (1) toward the handle until it locks. An audible click indicates that the closing trigger is locked. The tissue should be positioned between the black line at the distal end of the jaws and the black line at the proximal end indicating the ends of the staple line. The inner black line references the cut line of the device. Additionally, ensure that tissue has not milked behind the proximal black line. Tissue milked into the instrument beyond the black line may be transected without staples.
Note: When firing across thick tissue, holding the jaws in place after closing for 15 seconds prior to firing may result in better compression and better staple formation.
Caution: If the closing trigger (1) is difficult to lock, **reposition the instrument and take a smaller amount of tissue.** (See **Contraindications** for appropriate reload selection.)
Caution: Ensure that the tissue lies flat and is positioned properly between the jaws. Any "bunching" of tissue along the reload may result in an incomplete staple line.
Note: The use of staple line buttressing materials with the instrument may require an increased force to close.

8 Fire the instrument by squeezing the firing trigger (2) completely with one continuous, smooth stroke until it rests on the closing trigger (1). (Illustration 7)
Note: Once the firing cycle has been initiated, it must be completed. If re-initiation of firing is resumed after the instrument is unclamped, the instrument will lockout. If resistance is felt, stop and replace the cartridge. Firing through the lockout mechanism will break the instrument.
Caution: The firing stroke must be completed. **Do not** partially fire the instrument.
Note: The use of staple line buttressing materials with the instrument may require an increased force to fire and may reduce the number of firings.
Note: Crossing of staple lines may shorten the life of the instrument.

9 Relax grip. Press the anvil release button to separate the instrument jaws and allow the closing and firing triggers to return to their original positions (Illustration 8). Before removing the instrument, make sure that tissue is removed from the jaws.
Caution: After firing, examine the staple lines for pneumostasis/hemostasis and proper staple closure. If pneumostasis/hemostasis is not present, appropriate techniques should be used to achieve pneumostasis/hemostasis.
Caution: If the jaws do not automatically open after the anvil release button is pressed, pull the firing trigger (Number 2) upward (away from handle) until both firing and closing triggers return to their original positions. If the firing mechanism becomes inoperative, **do not** refire the instrument. (Remove and discard the instrument.)

10 To remove the instrument from the cavity, squeeze the closing trigger (1) until it locks, closing the jaws. (Illustration 9) When removing the articulating instruments, the articulation lever must be straight, indicating that the jaws of the instrument are also straight.
Caution: Failure to have the instrument jaws in the straight position will result in difficult withdrawal of the instrument and may result in breakage. Failure to straighten the instrument prior to reloading may prevent proper function of the fired cartridge lockout mechanism.

11 Completely withdraw the instrument in the closed position.

Reloading the Instrument

1 Using sterile technique, remove the reload from the package. To avoid damage, do not flip the reload into the sterile field.

2 Prior to reloading, ensure the instrument is in the open position. (Illustration 10)

3 Push upward (toward the anvil) to unsnap the reload from the cartridge jaw. Discard the used reload. (Illustration 11)
Warning: Prior to reloading the instrument, rinse the anvil and cartridge jaw in sterile solution and then wipe the anvil and cartridge jaw to clean any formed but unused staples from the instrument. Do not use the instrument until it has been visually inspected to confirm there are no staples on the anvil and cartridge jaw.

4 Examine the new reload for the presence of a staple retaining cap. If the retaining cap is not in place, discard the reload.
Note: Selection of the appropriate staple cartridge should be based upon the combined thicknesses of both the tissue and the staple line buttressing materials.

5 Insert the new reload by sliding it against the bottom of the cartridge jaw until it stops in the reload alignment slot. Snap the reload securely in place. Remove the staple retaining cap and discard. The instrument is now reloaded and ready for use. (Illustration 12)
Caution: After removing the staple retaining cap, observe the surface of the new reload. The reload must be replaced with another reload if any colored drivers are visible. (If colored drivers are visible, the reload may not contain staples.)

Warnings and Precautions

- Minimally invasive procedures should be performed only by persons having adequate training and familiarity with minimally invasive techniques. Consult medical literature relative to techniques, complications, and hazards prior to performance of any minimally invasive procedure.
- Minimally invasive instruments may vary in diameter from manufacturer to manufacturer. When minimally invasive instruments and accessories from different manufacturers are employed together in a procedure, verify compatibility prior to initiation of the procedure.
- A thorough understanding of the principles and techniques involved in laser, electrosurgical, and ultrasonic procedures is essential to avoid shock and burn hazards to both patient and medical personnel and damage to the device or other medical instruments. Ensure that electrical insulation or grounding is not compromised. **Do not** immerse electrosurgical instruments in liquid unless the instruments are designed and labeled to be immersed.
- When dividing major vascular structures, be sure to adhere to the basic surgical principle of proximal and distal control.
- Before using, remove the staple retaining cap and observe the surface of the reload. The reload must be replaced with another reload if any colored drivers are visible.
- Ensure that the tissue lies flat and is positioned properly between the jaws. Any "bunching" of tissue along the reload may result in an incomplete staple line.
- Prior to articulating and positioning the instrument jaws on tissue, make sure the jaws are in the open position.
- The firing stroke must be completed. **Do not** partially fire the instrument.
- Before removing the instrument, be sure tissue is cleared from the jaws and then close the jaws. Prior to removing the articulating instruments from the cavity, ensure the instrument is not articulated.
- After removing the instrument, examine the staple line for pneumostasis/hemostasis and proper staple closure. If pneumostasis/hemostasis is not present, appropriate techniques should be used to achieve pneumostasis/hemostasis.
- The instrument may be reloaded during a single procedure. Do not reload the instrument more than seven times for a total of eight firings per instrument.
- The firing trigger (2) and closing trigger (1) must be in the open position during reloading.
- Prior to reloading the instrument, rinse the anvil and cartridge jaw in sterile solution and then wipe the anvil and cartridge jaw to clean any formed but unused staples from the instrument. Do not use the instrument until it has been visually inspected to confirm there are no staples on the anvil and cartridge jaw.
- If the jaws do not automatically open after the anvil release button is pressed, pull the firing trigger (Number 2) upward (away from handle) until both firing and closing triggers return to their original positions. If the firing mechanism becomes inoperative, **do not** refire the instrument. (Remove and discard the instrument.)
- If the clamping mechanism becomes inoperative and the jaws do not clamp on tissue, do not fire the instrument. (Remove and discard the instrument and reload.)
- Crossing of staple lines may shorten the life of the instrument.
- When using a tissue or staple line buttressing material, the instructions of the manufacturer of the buttress material should be followed. The use of staple line buttressing materials with the instrument may require an increased force to fire and may reduce the number of firings.
- Selection of the appropriate staple cartridge should be based upon the combined thicknesses of both the tissue and the staple line buttressing materials.
- For removal of the articulating instruments, the articulation lever must be straight, indicating that the jaws of the instrument are also straight. Failure to have the instrument jaws in the straight position will result in difficult withdrawal of the instrument and may result in breakage. Failure to straighten the instrument prior to reloading may prevent proper function of the fired cartridge lockout mechanism.
- Instruments or devices which come into contact with bodily fluids may require special disposal handling to prevent biological contamination.

- Dispose of all opened instruments and reloads whether used or unused.
- This device is packaged and sterilized for single use only. Do not reuse, reprocess or resterilize. Reuse, reprocessing, or resterilization may compromise the structural integrity of the device and/or lead to device failure that in turn may result in patient injury, illness or death. Also, reprocessing or resterilization of single use devices may create a risk of contamination and/or cause patient infection or cross-infection, including, but not limited to, the transmission of infectious disease(s) from one patient to another. Contamination of the device may lead to injury, illness, or death of the patient.

English | Français

How Supplied
The ENDOPATH ETS45, ETS-Flex45, and ETS Compact-Flex45 Linear Cutters are supplied sterile for single patient use. Discard after use.

The ENDOPATH ETS-Flex45 and ETS Compact-Flex45 No-Knife Articulating Linear Staplers are supplied sterile for single patient use. Discard after use.

The reloads for use with the ENDOPATH ETS45, ETS-Flex45, and ETS Compact-Flex45 Linear Cutters are supplied sterile for single patient use. Discard after use.

The reloads for use with the ENDOPATH ETS-Flex45 and ETS Compact-Flex45 No-Knife Articulating Linear Staplers are supplied sterile for single patient use. Discard after use.

ENDOPATH®
Agrafeuses linéaires coupantes ETS45, ETS-Flex45 et ETS Compact-Flex45 et Agrafeuses linéaires articulées sans couteau ETS-Flex45 et ETS Compact-Flex45

Lire attentivement toutes les informations suivantes.

Le non-respect des instructions peut entraîner des conséquences chirurgicales graves, comme des fuites ou un agrafage incomplet.

Important : cette notice a pour but de donner des informations sur l'utilisation des agrafeuses linéaires coupantes endoscopiques ENDOPATH® ETS45, des agrafeuses linéaires coupantes endoscopiques articulées ETS-Flex45, des agrafeuses linéaires coupantes articulées ETS Compact-Flex45, des agrafeuses linéaires articulées sans couteau ETS-Flex45 et des agrafeuses linéaires articulées sans couteau ETS Compact-Flex45. Elle ne constitue pas une référence de techniques chirurgicales.

Indications
Les agrafeuses linéaires coupantes endoscopiques ENDOPATH ETS45, les agrafeuses linéaires coupantes endoscopiques articulées ETS-Flex45 et les agrafeuses linéaires coupantes articulées ETS Compact-Flex45 sont destinées à la section, la résection et/ou la création d'anastomoses. Ces instruments s'utilisent dans de multiples interventions chirurgicales ouvertes ou mini-invasives générales, gynécologiques, urologiques (dont les prostatectomies radicales), thoraciques et pédiatriques. Ils peuvent être utilisés avec des matériaux de renforcement des lignes d'agrafes ou de tissus, tels que le péricarde bovin.

Les agrafeuses linéaires articulées sans couteau ENDOPATH ETS-Flex45 et les agrafeuses linéaires articulées sans couteau ETS Compact-Flex45 sont destinées à la section, la résection et/ou la création d'anastomoses. Ces instruments s'utilisent dans de multiples interventions chirurgicales ouvertes ou mini-invasives générales, gynécologiques, urologiques (dont les prostatectomies radicales), thoraciques et pédiatriques. Ils peuvent être utilisés avec des matériaux de renforcement des lignes d'agrafes ou de tissus, tels que le péricarde bovin.

Contre-indications
- Ne pas utiliser ces instruments avec un chargeur vert sur les tissus nécessitant une force excessive pour être comprimés à 2,0 mm ou sur les tissus facilement comprimés en dessous de 2,0 mm.
- Ne pas utiliser ces instruments avec un chargeur bleu sur les tissus nécessitant une force excessive pour être comprimés à 1,5 mm ou sur les tissus facilement comprimés en dessous de 1,5 mm.
- Ne pas utiliser ces instruments avec un chargeur blanc sur les tissus nécessitant une force excessive pour être comprimés à 1,0 mm ou sur les tissus facilement comprimés en dessous de 1,0 mm.
- Ne pas utiliser ces instruments avec un chargeur gris sur les tissus nécessitant une force excessive pour être comprimés à 0,85 mm ou sur les tissus facilement comprimés en dessous de 0,85 mm.
- Ne pas utiliser ces instruments sur des tissus ischémiques ou nécrosés.
- Ne pas utiliser ces instruments sur l'aorte.
- Ne pas utiliser une agrafeuse linéaire coupante sur les vaisseaux principaux sans prévoir un contrôle proximal et distal.
- Ne pas utiliser ces instruments sur des organes solides, tels que le foie ou la rate, sur lesquelles une tentative de compression serait destructrice.
- Ces instruments ne doivent pas être utilisés lorsqu'un agrafage chirurgical est contre-indiqué.

Description des instruments
Les agrafeuses linéaires coupantes ENDOPATH ETS45, ETS-Flex45 et ETS Compact-Flex45 sont des instruments médicaux stériles, à usage unique, qui posent des agrafes tout en coupant simultanément les tissus entre les lignes d'agrafage. Les instruments ETS45 à chargeurs bleus (pour tissus normaux) posent deux doubles ou triples rangées d'agrafes en quinconce ; les instruments ETS45 à chargeurs verts (pour tissus épais) posent uniquement deux doubles rangées d'agrafes en quinconce ; les instruments ETS45 à chargeurs blancs (pour tissus vasculaires) posent deux triples rangées d'agrafes en quinconce et les instruments ETS45 à chargeurs gris (pour tissus mésentériques) posent deux triples rangées d'agrafes en quinconce. Le dispositif de sécurité des instruments rend impossible l'utilisation d'un chargeur ayant déjà servi. Les instruments possèdent une ligne d'agrafes d'environ 45 mm de long et une ligne de section d'environ 41 mm de long. Le cache de protection du chargeur protège les pointes des agrafes lors de l'expédition et du transport. Un levier d'articulation situé sur les agrafeuses linéaires coupantes articulées ETS-Flex45 et ETS Compact-Flex45 permet le mouvement bilatéral des mors des instruments.

Les agrafeuses linéaires sans couteau ENDOPATH ETS-Flex45 et ETS Compact-Flex45 sont des instruments médicaux stériles, à usage unique. Les instruments ETS45 à chargeurs bleus (pour tissus normaux) posent deux doubles ou triples rangées d'agrafes en quinconce ; les instruments ETS45 à chargeurs verts (pour tissus épais) posent uniquement deux doubles rangées d'agrafes en quinconce ; les instruments ETS45 à chargeurs blancs (pour tissus vasculaires) posent deux triples rangées d'agrafes en quinconce et les instruments ETS45 à chargeurs gris (pour tissus mésentériques) posent deux triples rangées d'agrafes en quinconce. Le dispositif de sécurité des instruments rend impossible l'utilisation d'un

STERILE R	Sterilized by Irradiation. Sterility Guaranteed Unless Package Opened or Damaged. Do Not Resterilize. Stérilisé par irradiation. Stérilité garantie si l'emballage n'a pas été ouvert ou endommagé. Ne pas restériliser. Strahlensterilisiert. Nicht verwenden, wenn die Sterilverpackung geöffnet oder beschädigt ist. Nicht resterilisieren. Sterilizzato con radiazioni. Sterilità garantita, a meno che la confezione non venga aperta o danneggiata. Non risterilizzare. Esterilizado por irradiação. Esterilização garantida excepto se a embalagem estiver aberta ou danificada. Não reesterilizar. Estéril por radiación. Esterilización garantizada mientras el envase esté íntegro. No reesterilizar. Gesteriliseerd met straling. Steriliteit gegarandeerd tenzij de verpakking is geopend of beschadigd. Niet opnieuw steriliseren. Steriliseret ved stråling. Garanteret sterilt, med mindre pakken er åbnet eller beskadiget. Må ikke gensteriliseres. Steriloitu säteilyttämällä. Tuote on steriili, kun pakkaus on avaamaton ja ehjä. Ei saa steriloida uudestaan. Αποστειρωμένοι με ακτινοβολία. Η στειρότητα είναι εγγυημένη εφόσον δεν ανοιχθεί ή συσκευασία ή δεν προκληθεί ζημιά σε αυτήν. Μην επαναποστειρώνετε. Steriliserad med bestrålning. Steriliteten garanteras under förutsättning att förpackningen inte är öppnad eller skadad. Får ej omsteriliseras. Urządzenie/sprzęt sterylizowane promieniowaniem. Jałowość gwarantowana pod warunkiem, że opakowanie nie zostało otwarte lub uszkodzone. Nie sterylizować ponownie. Besugárzással sterilizálva. A sterilitása addig garantálható, amíg ki nem nyitják, illetve meg nem sérül a csomagolás. Tilos újra sterilizálni! Sterilizace se provádí ozářením. Sterilnost je zaručena, pokud balení není otevřené nebo poškozené. Nástroj znovu nesterilizujte. Sterilizované ožarovaním. Sterilita je zaručená, ak nie je otvorený alebo poškodený obal. Neresterilizujte. 放射線滅菌済 包装を開封または破損していなければ、滅菌状態を保証します。 再滅菌はしないでください。	
	See Instructions For Use Voir notice d'utilisation Bitte Gebrauchsanweisung beachten Vedere le istruzioni per l'uso Ver Instruções de Uso Ver instrucciones de uso Zie gebruiksaanwijzing Se brugsvejledningen	Katso käyttöohjeet Διαβάστε τις Οδηγίες Χρήσεως Se bruksanvisning Zobacz instrukcja użytkowania Lásd a használati útmutatót Prostudujte návod k použití Prečítajte si návod na použitie ご使用に際しては、添付文書を必ずお読みください。
	Single Patient Use Usage unique Einweg-Instrument, nur für den Einsatz bei einem Patienten Monouso Uso único Uso en un solo paciente Voor eenmalig gebruik Engangsbrug	Potilaskohtainen Χρήση σε έναν μόνον ασθενή Endast för engångsbruk Do użytku u jednego pacjenta Egyetlen betegnél használható fel Nástroj je určený pouze pro jednoho pacienta Určené iba pre jedného pacienta 再使用不可
LOT	Lot N° de lot Ch.-B. Lotto Nº de lote Nº de lote Lotnr. Parti	Erän koodi Αρ. παρτίδας Batchnummer Numer partii produkcyjnej Tétel Šarže Šarža ロット番号
	Use Until Date À utiliser avant Verw. bis Utilizzare entro Validade A utilizar antes de Gebruik vóór Holdbar til angivne dato	Käytettävä viimeistään Χρησιμοποιείτε μέχρι την Använd före Koniec okresu przydatności do użytku A felüntetett dátumig használható fel Použít do data Použiteľné do 使用期限
	Manufacturer Fabricant Hersteller Produttore Fabricante Fabricante Fabrikant Producent	Valmistaja Κατασκευαστής Tillverkare Producent Gyártó Výrobce Výrobca 製造元

Rx Only	Caution: Federal (USA) law restricts this device to sale by or on the order of a physician. Attention : aux États-Unis, selon la loi fédérale, ce produit est exclusivement vendu sur prescription médicale. Achtung: Laut Gesetz darf dieses Instrument in den USA nur an einen Mediziner oder eine in seinem Auftrag handelnde Person verkauft werden. Attenzione: la legge federale americana consente la vendita di questo dispositivo solo dietro richiesta medica. Attenzione: vendita riservata esclusivamente a Farmacie, Enti Ospedalieri, Case di Cura. Atenção: A lei federal (dos Estados Unidos) só permite a venda deste dispositivo a médicos ou sob receita destes. Atención: la ley federal de EE.UU. impone que este producto sólo puede ser vendido por un médico o bajo prescripción médica. Waarschuwing: De Federale wetgeving (in de VS) eist dat dit apparaat uitsluitend door of in opdracht van een arts wordt verkocht. Forsigtig: I henhold til gældende lov må denne anordning kun sælges til eller bruges af en læge. Varoitus: Yhdysvaltain lain mukaan tämän tuotteen saa myydä vain lääkäri tai lääkärin määräyksestä. Προσοχή: Το ομοσπονδιακό δίκαιο των ΗΠΑ περιορίζει την πώληση του εργαλείου αυτού μόνον από ιατρούς ή κατόπιν εντολής ιατρού. Varning: Enligt amerikansk lag får detta instrument endast säljas till läkare eller på läkares anmodan. Przestroga: Prawo federalne (USA) zezwala na sprzedaż tego urządzenia wyłącznie lekarzowi lub na jego zamówienie. Figyelem! Az USA szövetségi törvényei értelmében az eszköz csak orvos megrendelésére értékesíthető. Upozornění: Podle federálních zákonů USA je prodej tohoto zařízení omezen na prodej v lékárnách nebo na lékařský předpis. Pozor: Podľa federálnych zákonov (v USA) sa toto zariadenie smie predávať iba lekárom alebo na lekársky predpis. 注意：アメリカ合衆国連邦法は、臨床医の注文による場合のみに本品の販売を制限しています。
EC REP	Authorized Representative in the European Community Représentant autorisé dans la Communauté européenne Autorisierte Vertretung in der Europäischen Gemeinschaft Distributore autorizzato per la Comunità Europea Representante autorizado na Comunidade Europeia Representante autorizado en la Comunidad Europea Bevoegd vertegenwoordiger bij de Europese Gemeenschap Autoriseret repræsentant i det europæiske fællesskab Valtuutettu edustaja Euroopan yhteisön alueella Εξουσιοδοτημένος αντιπρόσωπος στην Ευρωπαϊκή Κοινότητα Auktoriserad representant i Europeiska gemenskapen Autoryzowany przedstawiciel we Wspólnocie Europejskiej Meghatalmazott képviselő az Európai Közösségben Autorizovaný zástupce v Evropském společenství Autorizovaný zástupca pre Európske spoločenstvo 欧州共同体における正規代理店

P40380P09

REF

TSW45, TSB45, TSG45, ATW45, ATB45, ATG45, SCW45, SCB45, SCG45, NAW45, NAB45, NAG45, NSW45, NSB45, NSG45, LONG45A, 6SB45, 6TB45, 6CB45

EC REP

Ethicon Endo-Surgery (Europe) GmbH
Hummelsbuetteler Steindamm 71
22851 Norderstedt
GERMANY

Johnson & Johnson AG
CH-8957 Spreitenbach
SWITZERLAND

輸入・発売元：ジョンソン・エンド・ジョンソン 株式会社
〒135-0016 東京都江東区東陽6丁目3番2号 Tel:03 (5632) 7206

ETHICON ENDO-SURGERY, INC.
a Johnson & Johnson company

CE 0123

ETHICON ENDO-SURGERY, INC. ©ETHICON ENDO-SURGERY, INC. 2004
Cincinnati, OH 45242-2839 USA
P40380P09

ETHICON ENDO-SURGERY, INC.

Johnson & Johnson company

ENDOPATH®

TS45 Endoscopic Linear Cutter

mm Staple Line. 3.5 mm Staple Leg Length (Standard)

rafeuse Linéaire Coupante Endoscopique ETS45

ne d'agrafes de 45 mm. Longueur de jambe des agrafes de 3,5 mm (normales)

S45 Endoskopischer Linear Cutter

mm Klammernahtreihe. 3,5 mm Klammerhöhe (Standard)

turatrice endoscopica Linear Cutter ETS45

tuccia suture 45 mm. Profondità punto sutura 3,5 mm (standard)

Agrafador Linear Endoscópico com Corte ETS45

Linha de agrafos – 45 mm. Comprimento da perna do agrafo (Standard) – 3,5 mm

Endocortadora lineal ETS45

Línea de grapado de 45 mm. Longitud de los extremos de la grapa (Estándar) de 3,5 mm

ETS45 Endoscopische lineaire cutter

Staple-lijn 45 mm. Lengte pootjes staples 3,5 mm (standaard)

エンドパス*

ETS45エンドスコピック リニヤー カッター（1個入）

ステイプルライン 45 mm、ステイプルレッグ 3.5 mm（標準組織用）

包装が破損あるいは開封されないかぎり、製品の滅菌状態を保証します。

エンドカッター* 医療用具許可番号：07BY0001

取扱説明書参照　放射線滅菌済　再滅菌禁止　再使用不可　＊商標

STERILE R Sterilized by Irradiation. Sterility Guaranteed Unless Package Opened or Damaged. Do Not Resterilize.

Single Patient Use

See Instructions for Use

℞ Only

CON ENDO-SURGERY, INC. ©ETHICON ENDO-SURGERY, INC. 1998

nnati, OH 45242-2839 USA

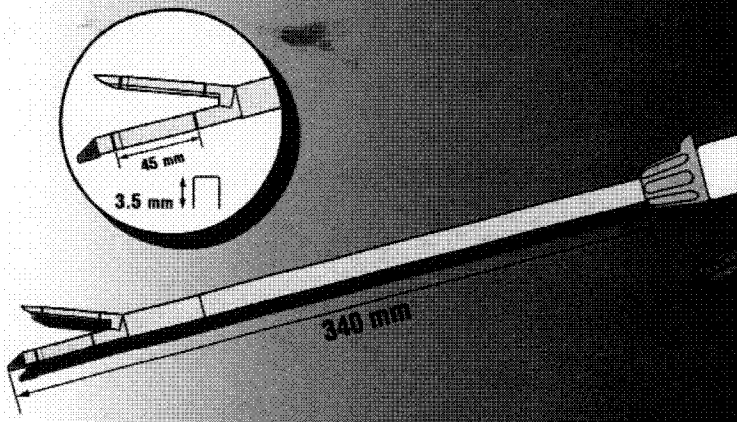

45 mm S

Agrafeuse Linéaire Coupante Endoscopique ETS45
ETS45 Endoskopischer Linear Cutter
Suturatrice endoscopica Linear Cutter ETS45
Agrafador Linear Endoscópico com Corte ETS45

Endocortadora lineal ETS45
ETS45 Endoscopische lineaire cutter
エンドパス* ETS45エンドスコピック リニヤー カッター（1個入）

STERILE R Sterilized by Irradiation. Sterility Guaranteed Unless Package Opened or Damaged. Do Not Resterilize.

Single Patient Use

See Instructions for Use

℞ Only

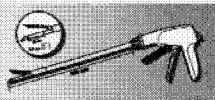

45

ETHICON ENDO-SURGERY, INC.

1 ENDOPATH®

ETS45 Endoscopic Linear Cutter

45 mm Staple Line, 3.5 mm Staple Leg Length (Standard)

Sterilized by Irradiation. Sterility Guaranteed Unless Package Opened or Damaged. Do Not Reprocess.

Single Patient Use **See Instructions For Use**

ETHICON ENDO-SURGERY, INC. ©ETHICON ENDO-SURGERY, INC. 1998

Cincinnati, OH 45242-2839 USA

P30133P39

Agrafeuse linéaire coupante endoscopique ETS45

Ligne d'agrafes de 45 mm. Longueur de jambe des agrafes de 3,5 mm (normales)

ETS45 endoskopischer Linear Cutter

45 mm Klammernahtreihe, 3,5 mm Klammerhöhe (Standard)

STERILE R Rx Only

Suturatrice endoscopica Linear Cutter ETS45

Cartuccia suture 45 mm. Profondità punto sutura 3,5 mm (standard)

Agrafador linear endoscópico com corte ETS45

Linha de agrafos – 45 mm. Comprimento da perna do agrafo (normal) – 3,5 mm

Endocortadora lineal ETS45

Línea de grapado de 45 mm. Longitud de los extremos de la grapa (estándares) de 3,5 mm

ETS45 endoscopische lineaire cutter

Staple-lijn 45 mm. Lengte staple pootje (standaard) 3,5 mm

エンドパス*

ETS45 エンドスコピック リニヤー カッター（1個入）

ステイプルライン 45 mm、ステイプルレッグ 3.5 mm（標準組織用）

包装が破損あるいは開封されない限り、製品の滅菌状態を保証します。

エンドカッター* 許可番号：07BT0001

滅菌処理方法：放射線滅菌　再滅菌禁止　再使用不可　＊商標

輸入・発売元：ジョンソン・エンド・ジョンソン 株式会社

〒135-0016 東京都江東区新木場4丁目3番2号 TEL:03 (5620) 7336

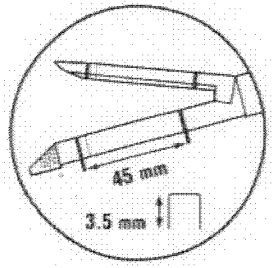

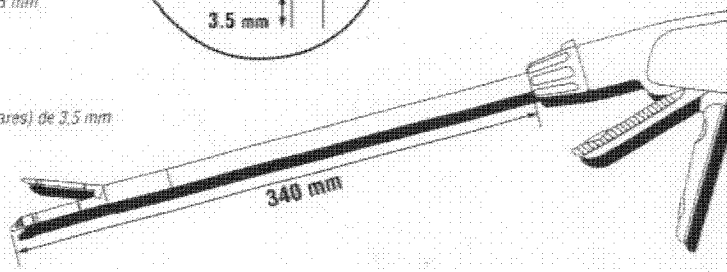

TSI

45 mm Standa

REVISIONS			
LTR	CAF NO.	CHNG	DATE
—	03 - 00295	CB	3-24-03
PRODUCT CODE	REFERENCE NUMBER	PACKAGE COMPONENT NUMBER	
TRANS	ARWTORNO	PRESCRIPTION	

ETHICON ENDO-SURGERY, INC.

CONFIDENTIAL - NOT TO BE REPRODUCED OR USED FOR ANY OTHER PURPOSE WITHOUT WRITTEN PERMISSION FROM ETHICON ENDO-SURGERY, INC. ORIGINAL PAGE SIZE: 11" x 17"

DIE PMS 279

Marketed Device Instructions

ENDOPATH®

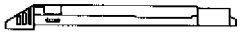

ETS45, ETS-Flex45, and ETS Compact-Flex45 Linear Cutter Reloads
ETS-Flex45 and ETS Compact-Flex45 No-Knife Articulating Linear Stapler Reloads

Chargeurs pour agrafeuses linéaires coupantes ETS45, ETS-Flex45 et ETS Compact-Flex45
Chargeurs pour agrafeuses linéaires articulées sans couteau ETS-Flex45 et ETS Compact-Flex45

Magazine für ETS45, ETS-Flex45 und ETS Compact-Flex45 Linear Cutter
Magazine für ETS-Flex45 und ETS Compact-Flex45 abwinkelbare Linear Stapler ohne Messer

Ricariche per suturatrici Linear Cutter ETS45, ETS-Flex45 e ETS Compact-Flex45
Ricariche per suturatrici lineari articolate senza bisturi ETS-Flex45 e ETS Compact-Flex45

Recargas para os agrafadores lineares com corte ETS45, ETS-Flex45 e ETS Compact-Flex45
Recargas para os agrafadores lineares articulados sem corte ETS-Flex45 e ETS Compact-Flex45

Cargas para cortadoras lineales ETS45, ETS-Flex45 y ETS Compact-Flex45
Cargas para grapadoras lineales articuladas sin bisturí ETS-Flex45 y ETS Compact-Flex45

Vullingen voor ETS45, ETS-Flex45 en ETS Compact-Flex45 lineaire cutters
Vullingen voor ETS-Flex45 en ETS Compact-Flex45 articuleerbare lineaire staplers (zonder mes)

ETS45, ETS-Flex45 og ETS Compact-Flex45 lineært skærende magasiner
ETS-Flex45 og ETS Compact-Flex45 artikulerende lineære stapler magasiner uden kniv

ETS45-, ETS-Flex45- ja ETS Compact-Flex45 -suorasulkuteikkurivaihtokasetit terättömät niveletyt
ETS-Flex45- ja ETS Compact-Flex45 -suorasulkuinstrumenttivaihtokasetit

Ανταλλακτικές κασέτες για τους ευθύγραμμους κοπτοράπτες ETS45, ETS-Flex45 και ETS Compact-Flex45
Ανταλλακτικές κασέτες για τα αρθρωτά ευθύγραμμα συρραπτικά χωρίς λάμα ETS-Flex45 και ETS Compact-Flex45

Magasin till ETS45, ETS-Flex45 och ETS Compact-Flex45 linjära skärande stapler
Magasin till ETS-Flex45 och ETS Compact-Flex45 artikulerande linjära stapler utan kniv

Magazynki do liniowych staplerów tnących ETS45, ETS-Flex45 i ETS Compact-Flex45
Magazynki do liniowych staplerów z połączeniem przegubowym, bez noża, ETS-Flex45 i ETS Compact-Flex45

ETS45, ETS-Flex45 és ETS Compact-Flex45 lineáris vágóhoz való utántöltők
ETS-Flex45 és ETS Compact-Flex45 kés nélküli csuklós lineáris kapcsozókhoz való utántöltők

Náplně lineárních fréz ETS45, ETS-Flex45 a ETS Compact-Flex45
Náplně lineárních svorkovačů s kloubem bez nožů ETS-Flex45 a ETS Compact-Flex45

Náplne pre lineárne zošívačky ETS45, ETS-Flex45 a ETS Compact-Flex45
Náplne pre lineárne svorkovače bez noža s kĺbom ETS-Flex45 a ETS Compact-Flex45

エンドパス*

ETS45、ETS Flex45、ETS Compact-Flex45 リニヤー カッター交換用カートリッジ
ETS Flex45、ETS Compact-Flex45（ナイフ無）アーティキュレート型リニヤースチイプラー交換用カートリッジ

ETHICON ENDO-SURGERY, INC.
a Johnson & Johnson company

Instructions, Instructions, Gebrauchsanweisung, Istruzioni, Instruções, Instrucciones, Gebruiksaanwijzing, Brugsvejledning, Ohje, Οδηγίες, Bruksanvisning, Instrukcja, Utasítások, Návod k použití, Návod, 説明書

98

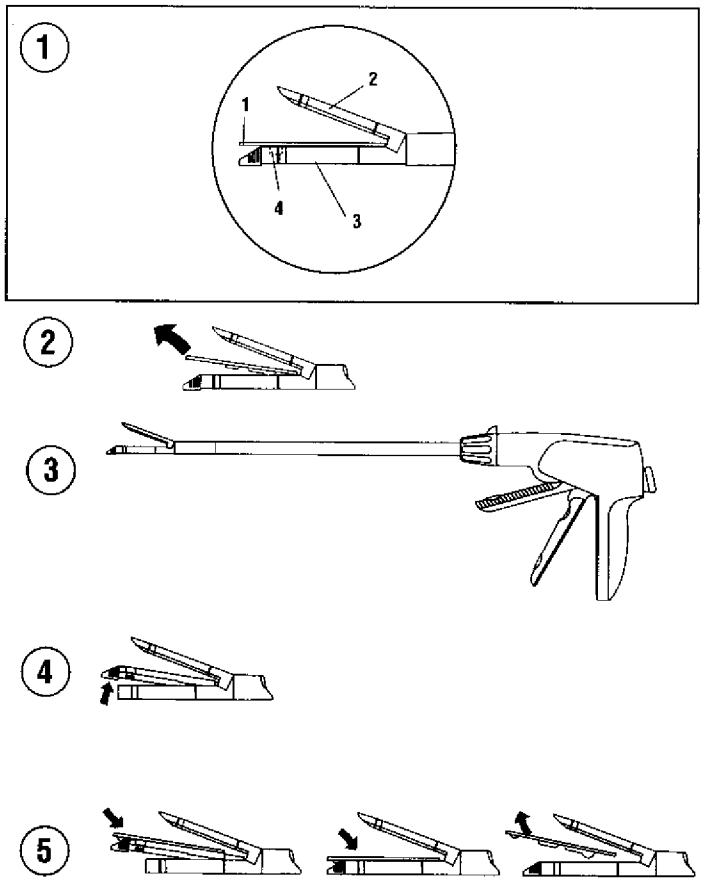
1
2
1
4
3
2
3
4
5

English

Please read all information carefully.

Failure to properly follow the instructions may lead to serious surgical consequences, such as leakage or disruption.

Important: This package insert is designed to provide instructions for use of the ENDOPATH ETS45 Endoscopic Linear Cutter Reloads, the ETS-Flex45 Endoscopic Articulating Linear Cutter Reloads, the ETS Compact-Flex45 Articulating Linear Cutter Reloads, the ETS-Flex45 No-Knife Articulating Linear Stapler Reloads, ETS Compact-Flex45 No-Knife Articulating Linear Stapler Reloads. It is not a reference to surgical techniques.

Indications

The ENDOPATH ETS45 Endoscopic Linear Cutters, the ETS-Flex45 Endoscopic Articulating Linear Cutters, and the ETS Compact-Flex45 Articulating Linear Cutters are intended for transection, resection, and/or creation of anastomoses. The instruments have application in multiple open or minimally invasive general, gynecologic, urologic (including radical prostatectomy), thoracic, and pediatric surgical procedures. They can be used with staple line or tissue buttressing materials such as bovine pericardium.

The ENDOPATH ETS-Flex45 No-Knife Articulating Linear Staplers and the ETS Compact-Flex45 No-Knife Articulating Linear Staplers are intended for transection, resection, and/or creation of anastomoses. The instruments have application in multiple open or minimally invasive general, gynecologic, urologic (including radical prostatectomy), thoracic, and pediatric surgical procedures. They can be used with staple line or tissue buttressing materials such as bovine pericardium.

Contraindications

- Do not use the instruments with green reload on any tissue that requires excessive force to compress to 2.0 mm or on any tissue that compresses easily to below 2.0 mm.
- Do not use the instruments with blue reload on any tissue that requires excessive force to compress to 1.5 mm or on any tissue that compresses easily to below 1.5 mm.
- Do not use the instruments with white reload on any tissue that requires excessive force to compress to 1.0 mm or on any tissue that compresses easily to below 1.0 mm.
- Do not use the instruments with gray reload on any tissue that requires excessive force to compress to 0.85 mm or any tissue that compresses easily to below 0.85 mm.
- Do not use the instruments on ischemic or necrotic tissue.
- Do not use the instruments on the aorta.
- Do not use any linear cutter on major vessels without making provision for proximal and distal control.
- Do not use the instruments on solid organs, such as the liver or spleen, where attempted compression would be destructive.
- These instruments are not intended for use when surgical stapling is contraindicated.

Device Descriptions

The ENDOPATH ETS45, ETS-Flex45, and ETS Compact-Flex45 Linear Cutters are sterile, single patient use instruments that deliver staples while simultaneously dividing tissue between rows. ETS45 instruments with blue (standard) reloads deliver two double- or triple- staggered rows of staples; ETS45 instruments with green (thick) reloads deliver two double-staggered rows of staples only; ETS45 instruments with white (vascular) reloads deliver two triple-staggered rows of staples; and, ETS45 instruments with gray (mesenteric) reloads deliver two triple-staggered rows of staples. The instruments' safety lock-out feature

is designed to prevent a used reload from being refired. The instruments have a staple line that is approximately 45 mm long and a cut line that is approximately 41 mm long. A staple retaining cap on the reload protects the staple leg points during shipping and transportation. An articulation lever on the ETS-Flex45 and ETS Compact-Flex45 Articulating Linear Cutters enables bilateral movement of the instrument jaws.

The ENDOPATH ETS-Flex45 and ETS Compact-Flex45 No-Knife Linear Staplers are sterile, single patient use instruments. ETS45 instruments with blue (standard) reloads deliver two double- or triple-staggered rows of staples; ETS45 instruments with green (thick) reloads deliver two double-staggered rows of staples only; ETS45 instruments with white (vascular) reloads deliver two triple-staggered rows of staples; and, ETS45 instruments with gray (mesenteric) reloads deliver two triple-staggered rows of staples. The instruments' safety lock-out feature is designed to prevent a used reload from being refired. The instruments have a staple line that is approximately 45 mm long. A staple retaining cap on the reload protects the staple leg points during shipping and transportation. An articulation lever on the instruments enables bilateral movement of the instrument jaws.

The instruments are loaded with a mesenteric, gray reload; a vascular, white reload; a standard, blue reload; or a thick tissue, green reload. ETS45 reloads are interchangeable across all ETS45 family instrument codes. For example, a TSW45 instrument, which is provided with a TR45W reload, may be reloaded with either the TR45B, the TR45G, the TR45W, the 6R45B, or the 6R45M.

Do not reload the instruments more than seven times for a maximum of eight firings per instrument. The use of the instrument with staple line buttressing material may reduce the number of firings. Use only the indicated reloads in the ETS45 instrument. Do not use ETS45 family reloads in an instrument other than an ETS45 family instrument.

ETS45 Product Family

Instrument Code	Description	Shaft Length
TSW45	ETS45 Endoscopic Linear Cutter, Vascular	340 mm
TSB45	ETS45 Endoscopic Linear Cutter, Standard	340 mm
TSG45	ETS45 Endoscopic Linear Cutter, Thick Tissue	340 mm
6SB45	ETS45 Endoscopic Linear Cutter, Standard (6 Rows)	340 mm
ATW45	ETS-Flex45 Endoscopic Articulating Linear Cutter, Vascular	340 mm
ATB45	ETS-Flex45 Endoscopic Articulating Linear Cutter, Standard	340 mm
ATG45	ETS-Flex45 Endoscopic Articulating Linear Cutter, Thick Tissue	340 mm
6TB45	ETS-Flex45 Endoscopic Articulating Linear Cutter, Standard (6 Rows)	340 mm

English

SCW45	ETS Compact-Flex45 Articulating Linear Cutter, Vascular	240 mm
SCB45	ETS Compact-Flex45 Articulating Linear Cutter, Standard	240 mm
SCG45	ETS Compact-Flex45 Articulating Linear Cutter, Thick Tissue	240 mm
6CB45	ETS Compact-Flex45 Articulating Linear Cutter, Standard (6 Rows)	240 mm
NAW45	ETS-Flex45 No-Knife Articulating Linear Stapler, Vascular	340 mm
NAB45	ETS-Flex45 No-Knife Articulating Linear Stapler, Standard	340 mm
NAG45	ETS-Flex45 No-Knife Articulating Linear Stapler, Thick Tissue	340 mm
NSW45	ETS Compact-Flex45 No-Knife Articulating Linear Stapler, Vascular	240 mm
NSB45	ETS Compact-Flex45 No-Knife Articulating Linear Stapler, Standard	240 mm
NSG45	ETS Compact-Flex45 No-Knife Articulating Linear Stapler, Thick Tissue	240 mm
LONG45A	ETS-Flex45 Endoscopic Articulating Long Linear Cutter, No Reload	440 mm

Specifications for ETS45 family reloads follow:

Supported Instrument Codes: TSW45, TSB45, TSG45, ATW45, ATB45, ATG45, SCW45, SCB45, SCG45, NAB45, NAG45, NAW45, NSW45, NSB45, NSG45, LONG45A, 6SB45, 6TB45, 6CB45.

Reload Code	Description	Staple Leg Length	Closed Staple Height	Number of Staples	Reload Color	Staple Rows
TR45G	Thick	4.1 mm	2.0 mm	44	Green	4
TR45B	Standard	3.5 mm	1.5 mm	44	Blue	4
6R45B	Standard	3.5 mm	1.5 mm	66	Blue	6
TR45W	Vascular/Thin	2.5 mm	1.0 mm	66	White	6
6R45M	Mesenteric/Thin	2.0 mm	0.85 mm	66	Gray	6

Illustration and Nomenclature (Illustration 1)

1. Staple Retaining Cap
2. Anvil Jaw
3. Cartridge Jaw
4. Reload Alignment Notch

Reloading the Instrument

Verify compatibility of all instruments and accessories prior to using the instrument (refer to **Warnings and Precautions**).

Note: The following instruments cut and staple: TSW45, TSB45, TSG45, ATW45, ATB45, ATG45, SCW45, SCB45, SCG45, LONG45A, 6SB45, 6TB45, 6CB45. The following instruments perform stapling only: NAB45, NAG45, NAW45, NSW45, NSB45, NSG45.

1 Using sterile technique, remove the reload from the package. To avoid damage, do not flip the reload into the sterile field.

2 Prior to reloading, ensure the instrument is in the open position. (Illustration 3)

3 Push upward (toward the anvil) to unsnap the reload from the cartridge jaw. Discard the used reload. (Illustration 4)

Warning: Prior to reloading the instrument, rinse the anvil and cartridge jaw in sterile solution and then wipe the anvil and cartridge jaw to clean any formed but unused staples from the instrument. Do not use the instrument until it has been visually inspected to confirm there are no staples on the anvil and cartridge jaw.

4 Examine the new reload for the presence of a staple retaining cap. If the retaining cap is not in place, discard the reload.

Note: Selection of the appropriate staple cartridge should be based upon the combined thicknesses of both the tissue and the staple line buttressing materials.

5 Insert the new reload by sliding it against the bottom of the cartridge jaw until it stops in the reload alignment slot. Snap the reload securely in place. Remove the staple retaining cap and discard. The instrument is now reloaded and ready for use. (Illustration 5)

Caution: After removing the staple retaining cap, observe the surface of the new reload. The reload must be replaced with another reload if any colored drivers are visible. (If colored drivers are visible, the reload may not contain staples.)

Warnings and Precautions

- Minimally invasive procedures should be performed only by persons having adequate training and familiarity with minimally invasive techniques. Consult medical literature relative to techniques, complications, and hazards prior to performance of any minimally invasive procedure.
- Minimally invasive instruments may vary in diameter from manufacturer to manufacturer. When minimally invasive instruments and accessories from different manufacturers are employed together in a procedure, verify compatibility prior to initiation of the procedure.
- A thorough understanding of the principles and techniques involved in laser, electrosurgical, and ultrasonic procedures is essential to avoid shock and burn hazards to both patient and medical personnel and damage to the device or other medical instruments. Ensure that electrical insulation or grounding is not compromised. **Do not** immerse electrosurgical instruments in liquid unless the instruments are designed and labeled to be immersed.
- When dividing major vascular structures, be sure to adhere to the basic surgical principle of proximal and distal control.
- Before using, remove the staple retaining cap and observe the surface of the reload. The reload must be replaced with another reload if any colored drivers are visible.

English

- Ensure that the tissue lies flat and is positioned properly between the jaws. Any "bunching" of tissue along the reload may result in an incomplete staple line.
- Prior to articulating and positioning the instrument jaws on tissue, make sure the jaws are in the open position.
- The firing stroke must be completed. **Do not** partially fire the instrument.
- Before removing the instrument, be sure tissue is cleared from the jaws and then close the jaws. Prior to removing the articulating instruments from the cavity, ensure the instrument is not articulated.
- After removing the instrument, examine the staple line for pneumostasis/hemostasis and proper staple closure. If pneumostasis/hemostasis is not present, appropriate techniques should be used to achieve pneumostasis/hemostasis.
- The instrument may be reloaded during a single procedure. Do not reload the instrument more than seven times for a total of eight firings per instrument.
- The firing trigger (2) and closing trigger (1) must be in the open position during reloading.
- Prior to reloading the instrument, rinse the anvil and cartridge jaw in sterile solution and then wipe the anvil and cartridge jaw to clean any formed but unused staples from the instrument. Do not use the instrument until it has been visually inspected to confirm there are no staples on the anvil and cartridge jaw.
- If the jaws do not automatically open after the anvil release button is pressed, pull the firing trigger (Number 2) upward (away from handle) until both firing and closing triggers return to their original positions. If the firing mechanism becomes inoperative, **do not** refire the instrument. (Remove and discard the instrument.)
- If the clamping mechanism becomes inoperative and the jaws do not clamp on tissue, do not fire the instrument. (Remove and discard the instrument and reload.)
- Crossing of staple lines may shorten the life of the instrument.
- When using a tissue or staple line buttressing material, the instructions of the manufacturer of the buttress material should be followed. The use of staple line buttressing materials with the instrument may require an increased force to fire and may reduce the number of firings.
- Selection of the appropriate staple cartridge should be based upon the combined thicknesses of both the tissue and the staple line buttressing materials.
- For removal of the articulating instruments, the articulation lever must be straight, indicating that the jaws of the instrument are also straight. Failure to have the instrument jaws in the straight position will result in difficult withdrawal of the instrument and may result in breakage. Failure to straighten the instrument prior to reloading may prevent proper function of the fired cartridge lockout mechanism.
- Instruments or devices which come into contact with bodily fluids may require special disposal handling to prevent biological contamination.
- Dispose of all opened instruments and reloads whether used or unused.
- This device is packaged and sterilized for single use only. Do not reuse, reprocess or resterilize. Reuse, reprocessing, or resterilization may compromise the structural integrity of the device and/or lead to device failure that in turn may result in patient injury, illness or death. Also, reprocessing or resterilization of single use devices may create a risk of contamination and/or cause patient infection or cross-infection, including, but not limited to, the transmission of infectious disease(s) from one patient to another. Contamination of the device may lead to injury, illness, or death of the patient.

How Supplied

The ENDOPATH ETS45, ETS-Flex45, and ETS Compact-Flex45 Linear Cutters are supplied sterile for single patient use. Discard after use.

The ENDOPATH ETS-Flex45 and ETS Compact-Flex45 No-Knife Articulating Linear Staplers are supplied sterile for single patient use. Discard after use.

The reloads for use with the ENDOPATH ETS45, ETS-Flex45, and ETS Compact-Flex45 Linear Cutters are supplied sterile for single patient use. Discard after use.

The reloads for use with the ENDOPATH ETS-Flex45 and ETS Compact-Flex45 No-Knife Articulating Linear Staplers are supplied sterile for single patient use. Discard after use.

ENDOPATH®

Chargeurs pour agrafeuses linéaires coupantes ETS45, ETS-Flex45 et ETS Compact-Flex45
Chargeurs pour agrafeuses linéaires articulées sans couteau ETS-Flex45 et ETS Compact-Flex45

Lire attentivement toutes les informations suivantes.

Le non-respect des instructions peut entraîner des conséquences chirurgicales graves, comme des fuites ou un agrafage incomplet.

Important : cette notice a pour but de donner des informations sur l'utilisation des chargeurs pour agrafeuses linéaires coupantes endoscopiques ENDOPATH ETS45, des chargeurs pour agrafeuses linéaires coupantes endoscopiques articulées ETS-Flex45, des chargeurs pour agrafeuses linéaires coupantes articulées ETS Compact-Flex45, des chargeurs pour agrafeuses linéaires articulées sans couteau ETS-Flex45, des chargeurs pour agrafeuses linéaires articulées sans couteau ETS Compact-Flex45. Elle ne constitue pas une référence de techniques chirurgicales.

Indications

Les agrafeuses linéaires coupantes endoscopiques ENDOPATH ETS45, les agrafeuses linéaires coupantes endoscopiques articulées ETS-Flex45 et les agrafeuses linéaires coupantes articulées ETS Compact-Flex45 sont destinées à la section, la résection et/ou la création d'anastomoses. Ces instruments s'utilisent dans de multiples interventions chirurgicales ouvertes ou mini-invasives générales, gynécologiques, urologiques (dont les prostatectomies radicales), thoraciques et pédiatriques. Ils peuvent être utilisés avec des matériaux de renforcement des lignes d'agrafes ou de tissus, tels que le péricarde bovin.

Les agrafeuses linéaires articulées sans couteau ENDOPATH ETS-Flex45 et les agrafeuses linéaires articulées sans couteau ETS Compact-Flex45 sont destinées à la section, la résection et/ou la création d'anastomoses. Ces instruments s'utilisent dans de multiples interventions chirurgicales ouvertes ou mini-invasives générales, gynécologiques, urologiques (dont les prostatectomies radicales), thoraciques et pédiatriques. Ils peuvent être utilisés avec des matériaux de renforcement des lignes d'agrafes ou de tissus, tels que le péricarde bovin.

STERILE R	Sterilized by Irradiation. Sterility Guaranteed Unless Package Opened or Damaged. Do Not Resterilize. Stérilisé par irradiation. Stérilité garantie si l'emballage n'a pas été ouvert ou endommagé. Ne pas restériliser. Strahlensterilisiert. Nicht verwenden, wenn die Sterilverpackung geöffnet oder beschädigt ist. Nicht resterilisieren. Sterilizzato con radiazioni. Sterilità garantita, a meno che la confezione non venga aperta o danneggiata. Non risterilizzare. Esterilizado por irradiação. Esterilização garantida excepto se a embalagem estiver aberta ou danificada. Não reesterilizar. Estéril por radiación. Esterilización garantizada mientras el envase esté íntegro. No reesterilizar. Gesteriliseerd met straling. Steriliteit gegarandeerd tenzij de verpakking is geopend of beschadigd. Niet opnieuw steriliseren. Steriliseret ved stråling. Garanteret sterilt, med undtagelse af åbnet eller beskadiget. Må ikke gensteriliseres. Steriloitu säteilyttämällä. Tuote on steriili, kun pakkaus on avaamaton ja ehjä. Ei saa steriloida uudestaan. Αποστειρωμένο με ακτινοβολία. Η στειρότητα είναι εγγυημένη εφόσον δεν ανοιχθεί η συσκευασία ή δεν προκληθεί ζημιά σε αυτήν. Μην επαναποστειρώνετε. Steriliserad med bestrålning. Steriliteten garanteras under förutsättning att förpackningen inte är öppnad eller skadad. Får ej omsteriliseras. Urządzenie/sprzęt sterylizowane promieniowaniem. Jałowość gwarantowana pod warunkiem, że opakowanie nie zostało otwarte lub uszkodzone. Nie sterylizować ponownie. Besugárzással sterilizálva. A sterilitása addig garantálható, amíg ki nem nyitják, illetve meg nem sérül a csomagolás. Tilos újra sterilizálni! Sterilizace se provádí ozářením. Sterilnost je zaručena, pokud balení není otevřené nebo poškozené. Nástroj znovu nesterilizujte. Sterilizované ožarovaním. Sterilita je zaručená, ak nie je otvorený alebo poškodený obal. Neresterilizujte. 放射線滅菌済 包装が開封または破損していないかぎり、滅菌状態を保証します 再滅菌はしないでください。
⚠	See Instructions For Use Voir notice d'utilisation Bitte Gebrauchsanweisung beachten Vedere le istruzioni per l'uso Ver Instruções de Uso Ver instrucciones de uso Zie gebruiksaanwijzing Se brugsvejledningen Katso käyttöohjeet Διαβάστε τις Οδηγίες Χρήσεως Se bruksanvisning Zobacz instrukcja użytkowania Lásd a használati útmutatót Prostudujte návod k použití Prečítajte si návod na použitie ご使用に際しては、添付文書を必ずお読みください。
②	Single Patient Use Usage unique Einweg-Instrument, nur für den Einsatz bei einem Patienten Monouso Uso único Uso en un solo paciente Voor eenmalig gebruik Engangsbrug Potilaskohtainen Χρήση σε έναν μόνον ασθενή Endast för engångsbruk Do użytku u jednego pacjenta Egyetlen betegnél használható fel Nástroj je určený pouze pro jednoho pacienta Určené iba pre jedného pacienta 再使用不可

106

LOT	Lot Nº de lot Ch.-B. Lotto Nº de lote Nº de lote Lotnr. Parti	Erän koodi Αρ. παρτίδας Batchnummer Numer partii produkcyjnej Tétel Šarže Šarža ロット番号
	Use Until Date À utiliser avant Verw. bis Utilizzare entro Validade A utilizar antes de Gebruik vóór Holdbar til angivne dato	Käytettävä viimeistään Χρησιμοποιείτε μέχρι την Använd före Koniec okresu przydatności do użytku A feltüntetett dátumig használható fel Použít do data Použiteľné do 使用期限
	Manufacturer Fabricant Hersteller Produttore Fabricante Fabricante Fabrikant Producent	Valmistaja Κατασκευαστής Tillverkare Producent Gyártó Výrobce Výrobca 製造元

Rx Only	Caution: Federal (USA) law restricts this device to sale by or on the order of a physician. Attention : aux États-Unis, selon la loi fédérale, ce produit est exclusivement vendu sur prescription médicale. Achtung: Laut Gesetz darf dieses Instrument in den USA nur an einen Mediziner oder eine in seinem Auftrag handelnde Person verkauft werden. Attenzione: la legge federale americana consente la vendita di questo dispositivo solo dietro richiesta medica. Attenzione: vendita riservata esclusivamente a Farmacie, Enti Ospedalieri, Case di Cura. Atenção: A lei federal (dos Estados Unidos) só permite a venda deste dispositivo a médicos ou sob receita destes. Atención: la ley federal de EE.UU. impone que este producto sólo puede ser vendido por un médico o bajo prescripción médica. Waarschuwing: De Federale wetgeving (in de VS) eist dat dit apparaat uitsluitend door of in opdracht van een arts wordt verkocht. Forsigtig: I henhold til gældende lov må denne anordning kun sælges til eller bruges af en læge. Varoitus: Yhdysvaltain lain mukaan tämän tuotteen saa myydä vain lääkäri tai lääkärin määräyksestä. Προσοχή: Το ομοσπονδιακό δίκαιο των ΗΠΑ περιορίζει την πώληση του εργαλείου αυτού μόνον από γιατρούς ή κατόπιν εντολής γιατρού. Varning: Enligt amerikansk lag får detta instrument endast säljas till läkare eller på läkares anmodan. Przestroga: Prawo federalne (USA) zezwala na sprzedaż tego urządzenia wyłącznie lekarzowi lub na jego zamówienie. Figyelem! Az USA szövetségi törvényei értelmében az eszköz csak orvos megrendelésére értékesíthető. Upozornění: Podle federálních zákonů USA je prodej tohoto zařízení omezen na prodej v lékárnách nebo na lékařský předpis. Pozor: Podľa federálnych zákonov (v USA) sa toto zariadenie smie predávať iba lekárom alebo na lekársky predpis. 注意：アメリカ合衆国連邦法は、臨床医の注文による場合のみに本品の販売を制限しています。
EC REP	Authorized Representative in the European Community Représentant autorisé dans la Communauté européenne Autorisierte Vertretung in der Europäischen Gemeinschaft Distributore autorizzato per la Comunità Europea Representante autorizado na Comunidade Europeia Representante autorizado en la Comunidad Europea Bevoegd vertegenwoordiger bij de Europese Gemeenschap Autoriseret repræsentant i det europæiske fællesskab Valtuutettu edustaja Euroopan yhteisön alueella Εξουσιοδοτημένος εκπρόσωπος στην Ευρωπαϊκή Κοινότητα Auktoriserad representant i Europeiska gemenskapen Autoryzowany przedstawiciel we Wspólnocie Europejskiej Meghatalmazott képviselő az Európai Közösségben Autorizovaný zástupce v Evropském společenství Autorizovaný zástupca pre Európske spoločenstvo 欧州共同体における正規代理店

P40380P10

REF

TR45W, TR45B, TR45G, 6R45B, 6R45M

EC REP Ethicon Endo-Surgery (Europe) GmbH
Hummelsbuetteler Steindamm 71
22851 Norderstedt
GERMANY

Johnson & Johnson AG
CH-8957 Spreitenbach
SWITZERLAND

輸入・発売元：ジョンソン・エンド・ジョンソン 株式会社
〒135-0016 東京都江東区東陽6丁目3番2号 TEL:03 (5632) 7206

ETHICON ENDO-SURGERY, INC.
a Johnson & Johnson company

CE 0123

ETHICON ENDO-SURGERY, INC. ©ETHICON ENDO-SURGERY, INC. 2004
Cincinnati, OH 45242-2839 USA P40380P10

Marketed Device Carton

ETHICON ENDO-SURGERY, INC.
a Johnson & Johnson company

12 ENDOPATH®

ETS45 3.5 mm Reloads (Standard)

45 mm Staple Line. 3.5 mm Staple Leg Length

Chargeurs ETS45 3,5 mm (normaux)
Ligne d'agrafes de 45 mm. Longueur de jambe des agrafes de 3,5 mm
ETS45 Magazine mit 3,5 mm Klammerhöhe (Standard)
45 mm Klammernahtreihe. 3,5 mm Klammerhöhe
Ricariche ETS45 con punti sutura da 3,5 mm (standard)
Cartuccia sutura 45 mm. Profondità punto sutura 3,5 mm
ETS45 de 3,5 mm com recarga (Standard)
Linha de agrafos – 45 mm. Comprimento da perna do agrafo – 3,5 mm
Cargas de 3,5 mm ETS45 (Estándar)
Líneas de grapado de 45 mm. Longitud de los extremos de la grapa de 3,5 mm
ETS45 3,5 mm vullingen (standaard)
Staple-lijn 45 mm. Lengte pootjes staples 3,5 mm

エンドパス*
ETS45 3.5 mm 交換用カートリッジ(標準組織用)(12本入)
ステイプルライン 45 mm、ステイプルレッグ 3.5 mm
包装が破損あるいは開封されないかぎり、製品の滅菌状態を保証します。
エンドカッター 医療用具許可番号：078Y0001
改良説明書参照　　放射線滅菌済　　再滅菌禁止　　再使用不可　　＊商標

A93080P00

REF
TR45B

Rx Only

Sterilized by Irradiation. Sterility Guaranteed Unless Package Opened or Damaged. Do Not Restertilize.

Single Patient Use

See Instructions For Use

ETHICON ENDO-SURGERY, INC.
Cincinnati, OH 45242-2839 USA

©ETHICON ENDO-SURGERY, INC. 2002

45 mm Standard

ETHICON ENDO-SURGERY, INC.
a Johnson & Johnson company

12 ENDOPATH®

ETS45 3.5 mm Reloads (Standard)

Chargeurs ETS45 3,5 mm (normaux)
ETS45 Magazine mit 3,5 mm Klammerhöhe (Standard)
Ricariche ETS45 con punti sutura da 3,5 mm (standard)
ETS45 de 3,5 mm com recarga (Standard)
Cargas de 3,5 mm ETS45 (Estándar)
ETS45 3,5 mm vullingen (standaard)

エンドパス*
ETS45 3.5 mm 交換用カートリッジ
(標準組織用)(12本入)

REF
TR45B

Rx Only

45 mm Standard

Marketed Device Tyvek

LOT

A93215P00

CE 0123

ETHICON ENDO-SURGERY, INC.

STERILE R

℞ Only

1 ENDOPATH® ETS45 3.5 mm

Reload, Chargeur, Magazin, Ricarica, Recarga, Carga, Vulling

3.5 mm

エンドパス* ETS45 3.5 mm 交換用カートリッジ(1本入)

包装が破損あるいは開封されないかぎり、製品の滅菌状態を保証します。

エンドカッター 医療用具許可番号：07BY0001

取扱説明書参照　放射線滅菌済　再滅菌禁止　再使用不可　＊商標

輸入・発売元：ジョンソン・エンド・ジョンソン 株式会社

〒135-0016 東京都江東区東陽6丁目3番2号 ☎:03(5632)7206

メキシコでの組み立て品

REF

TR45B

ETHICON ENDO-SURGERY, INC.
Cincinnati, OH 45242-2839 USA

©ETHICON ENDO-SURGERY, INC. 1998

Assembled in Mexico

45 mm Standard

111

DEPARTMENT OF HEALTH & HUMAN SERVICES

Public Health Service
Food and Drug Administration
Memorandum

From: Reviewer(s) - Name(s) Herbert Lerner, MD

Subject: 510(k) Number K051002

To: The Record - It is my recommendation that the subject 510(k) Notification:

- ☐ Refused to accept.
- ☐ Requires additional information (other than refuse to accept).
- ☒ Is substantially equivalent to marketed devices.
- ☐ NOT substantially equivalent to marketed devices.
- ☐ Other (e.g., exempt by regulation, not a device, duplicate, etc.)

Is this device subject to Section 522 Postmarket Surveillance?	☐ YES	☒ NO
Is this device subject to the Tracking Regulation?	☐ YES	☒ NO
Was clinical data necessary to support the review of this 510(k)?	☐ YES	☒ NO
Is this a prescription device?	☒ YES	☐ NO
Was this 510(k) reviewed by a Third Party?	☐ YES	☒ NO
Special 510(k)?	☐ YES	☒ NO
Abbreviated 510(k)? Please fill out form on H Drive 510k/boilers	☐ YES	☒ NO

Truthful and Accurate Statement ☐ Requested ☒ Enclosed

☒ A 510(k) summary OR ☐ A 510(k) statement

☐ The required certification and summary for class III devices

☒ The indication for use form

Combination Product Category (Please see algorithm on H drive 510k/Boilers) N

Animal Tissue Source ☐ YES ☒ NO Material of Biological Origin ☐ YES ☒ NO

The submitter requests under 21 CFR 807.95 (doesn't apply for SEs):

☐ No Confidentiality ☐ Confidentiality for 90 days ☐ Continued Confidentiality exceeding 90 days

Predicate Product Code with Class: GDW 878.4750 Class II Implantable Staple

Additional Product Code(s) with panel (optional): KOG

Review: [signature] (Branch Chief) PRSB (Branch Code) 5/10/05 (Date)

Final Review: [signature] (Division Director) 5/16/05 (Date)

Revised:4/2/03

4

Internal Administrative Form

	YES	NO
1. Did the firm request expedited review? 2. Did we grant expedited review?		✓
3. Have you verified that the Document is labeled Class III for GMP purposes? 4. If, not, has POS been notified?	N/A	
5. Is the product a device? 6. Is the device exempt from 510(k) by regulation or policy? 7. Is the device subject to review by CDRH?	✓ ✓	 ✓
8. Are you aware that this device has been the subject of a previous NSE decision? 9. If yes, does this new 510(k) address the NSE issue(s), (e.g., performance data)?	—	
10. Are you aware of the submitter being the subject of an integrity investigation? 11. If, yes, consult the ODE Integrity Officer. 12. Has the ODE Integrity Officer given permission to proceed with the review? (Blue Book Memo #I91-2 and Federal Register 90N0332, September 10, 1991.	 —	

6

REVISED:3/14/95

THE 510(K) DOCUMENTATION FORMS ARE AVAILABLE ON THE LAN UNDER 510(K) BOILERPLATES TITLED "DOCUMENTATION" AND MUST BE FILLED OUT WITH EVERY FINAL DECISION (SE, NSE, NOT A DEVICE, ETC.).

"SUBSTANTIAL EQUIVALENCE" (SE) DECISION MAKING DOCUMENTATION

K K051002

Reviewer: Herbert Lerner, MD

Division/Branch: ENDOPATH ENDOCUTTER 60 — DGRAD/PRSB

Device Name: Linear Cutter

Product To Which Compared (510(K) Number If Known): K020779

	YES	NO	
1. Is Product A Device	✓		If NO = Stop
2. Is Device Subject To 510(k)?	✓		If NO = Stop
3. Same Indication Statement?	✓		If YES = Go To 5
4. Do Differences Alter The Effect Or Raise New Issues of Safety Or Effectiveness?		✓	If YES = Stop NE
5. Same Technological Characteristics?		✓	If YES = Go To 7
6. Could The New Characteristics Affect Safety Or Effectiveness?		✓	If YES = Go To 8
7. Descriptive Characteristics Precise Enough?	✓		If NO = Go To 10 If YES = Stop SE
8. New Types Of Safety Or Effectiveness Questions?			If YES = Stop NE
9. Accepted Scientific Methods Exist?			If NO = Stop NE
10. Performance Data Available?			If NO = Request Data
11. Data Demonstrate Equivalence?			Final Decision:

Note: In addition to completing the form on the LAN, "yes" responses to questions 4, 6, 8, and 11, and every "no" response requires an explanation.

7

1. Intended Use:

2. Device Description: Provide a statement of how the device is either similar to and/or different from other marketed devices, plus data (if necessary) to support the statement. Is the device life-supporting or life sustaining? Is the device implanted (short-term or long-term)? Does the device design use software? Is the device sterile? Is the device for single use? Is the device over-the-counter or prescription use? Does the device contain drug or biological product as a component? Is this device a kit? Provide a summary about the devices design, materials, physical properties and toxicology profile if important.

EXPLANATIONS TO "YES" AND "NO" ANSWERS TO QUESTIONS ON PAGE 1 AS NEEDED

1. Explain why not a device:

2. Explain why not subject to 510(k):

3. How does the new indication differ from the predicate device's indication:

4. Explain why there is or is not a new effect or safety or effectiveness issue:

5. Describe the new technological characteristics: longer staple line (more staples), wider angle of jaw opening, minor ergonomic changes to lever, additional staple size

6. Explain how new characteristics could or could not affect safety or effectiveness: These are extensions of staplers already marketed & no significant changes. not effect on safety or efficacy.

7. Explain how descriptive characteristics are not precise enough:

8. Explain new types of safety or effectiveness questions raised or why the questions are not new:

9. Explain why existing scientific methods can not be used:

10. Explain what performance data is needed:

11. Explain how the performance data demonstrates that the device is or is not substantially equivalent:

ATTACH ADDITIONAL SUPPORTING INFORMATION

8

510 (K) MEMORANDUM
K051002

TO: The Record
FROM: Herbert Lerner, MD
DATE: May 5, 2005
SUBJECT: Endopath Endocutter 60 Endoscopic Linear Cutter
Sponsor: Ethicon ENDO-Surgery Endo-Surgery Inc.
Contact: Ms. Georgia Abernathy
513-337-3179
gabernat@eesus.jnj.com

Recommendation: Substantially Equivalent
Procode: GDW, KOG
Class: II
Regulation Number: 878.4750
Regulation Name: Implantable Staple
Predicates: All Ethicon Endo-Surgery devices

K020779	**Endopath & Proximate Linear Cutters and staplers**
K002398	**Endopath ETS45 Linear Cutters, staplers, and reloads**
K961390	**Endopath ETS Linear Cutter-and flexible/articulating cutter**

The device does not contain any drugs or biologicals.

Indications for Use:

Subject Device: The Endopath Endocutter 60 Endoscopic Linear Cutter is intended for transection, resection, and/or creation of anastomoses. The instrument has application in multiple open or minimally invasive general, gynecologic, urologic, thoracic, and pediatric surgical procedures. It can be used with staple line or tissue buttressing materials.

Predicate: The Endopath Endoscopic Linear Cutter is intended for transection, resection, and/or creation of anastomoses. The instrument has application in multiple open or minimally invasive general, gynecologic, urologic (*including radical prostatectomy*), thoracic, and pediatric surgical procedures. It can be used with staple line or tissue buttressing materials *such as bovine pericardium*.

Discussion: The indication statements are essentially identical; the statement for the subject device has been slightly changed for clarity. (b)(4),(b)(5) (b)(4),(b)(5) the two devices, and I have no concerns about this slight change.

9

Technological Characteristics (Design, Materials, Sizes, etc.)

Subject Device: The Endopath Endocutter 60 device is a sterile, single use instrument that delivers staples while simultaneously dividing tissue between rows of staples. It can be used in an open or endoscopic procedure.

The device will be available in three lengths: standard (34cm), compact (28cm) and long (44cm). Each can accommodate any one of 4 staple sized cartridges. The cartridges are 60mm long, with a cutting knife of 57mm. The standard sizes of staples now are 45mm, so the length of the cartridge and number of staples per cartridge has increased. The staple cartridges are:

Product Code	Color	Tissue Thickness	Closed Staple Height
ECR 60W	White	Vascular/thin	1.0mm
ECR 60B	Blue	Standard	1.5mm
ECR 60D	Gold	Thick, less dense	1.8mm
ECR 60G	Green	Thick	2.0mm

The Gold line of staples is a new addition to the sizes now available for these staplers. All of these staples come in reloadable cartridges, so each stapler may be used several times before being discarded. Each may be used on only one patient.

(b)(4),(b)(5)

Predicate Device: As noted above, the predicate is similar to the subject device, except that: the cartridges are shorter, there is no Gold staple size, and there are a few ergonomic changes to aid functionality of the device.

(b)(4),(b)(5)

(b)(4),(b)(5)

Discussion of equivalency

(b)(4),(b)(5)

Comparitive Performance Data (in vitro, animal and/or clinical)

a)The sponsor performed the following studies to demonstrate equivalence of their device to their own predicate:

(b)(4),(b)(5)

All criteria for demonstrating equivalency were met. For the Gold staple, it met the requirements on the Endocutter 60 platform

b) Animal Studies: Safety:

(b)(4),(b)(5)

c) Biocompatibility testing: (b)(4),(b)(5)

(b)(4),(b)(5)

Sterilization

Method – Gamma Radiation
Validation – ISO 11137-1994
Dose - (b)(4),
(b)(4),(b)(5)
Sterility Assurance Level –
Packaging – (b)(4),(b)(5)

Pyrogenicity claims - None

Labeling

The device is available by prescription.
Package Insert (Tab-L)
Carton/Pouch Labels (Tab-L)

Claims

None

Has sponsor provided all administrative requirements?

- Truthful and Accurate Statement (Section F)
- 510(k) Summary or Statement (Section E)
- Indication for Use Page (Section D}

Summary

The device is essentially identical to the predicate. The main change is the length of the staple cartridge from 45mm to 60mm, and this has been demonstrated to work as the predicate (b)(4),(b)(5)

(b)(4),(b)(5)

(b)(4),(b)(5) *. Taken as a whole, I feel the sponsor has demonstrated that this deice is substantially equivalent to the predicate.*

Herbert Lerner, MD

12

510(k) "SUBSTANTIAL EQUIVALENCE" DECISION-MAKING PROCESS

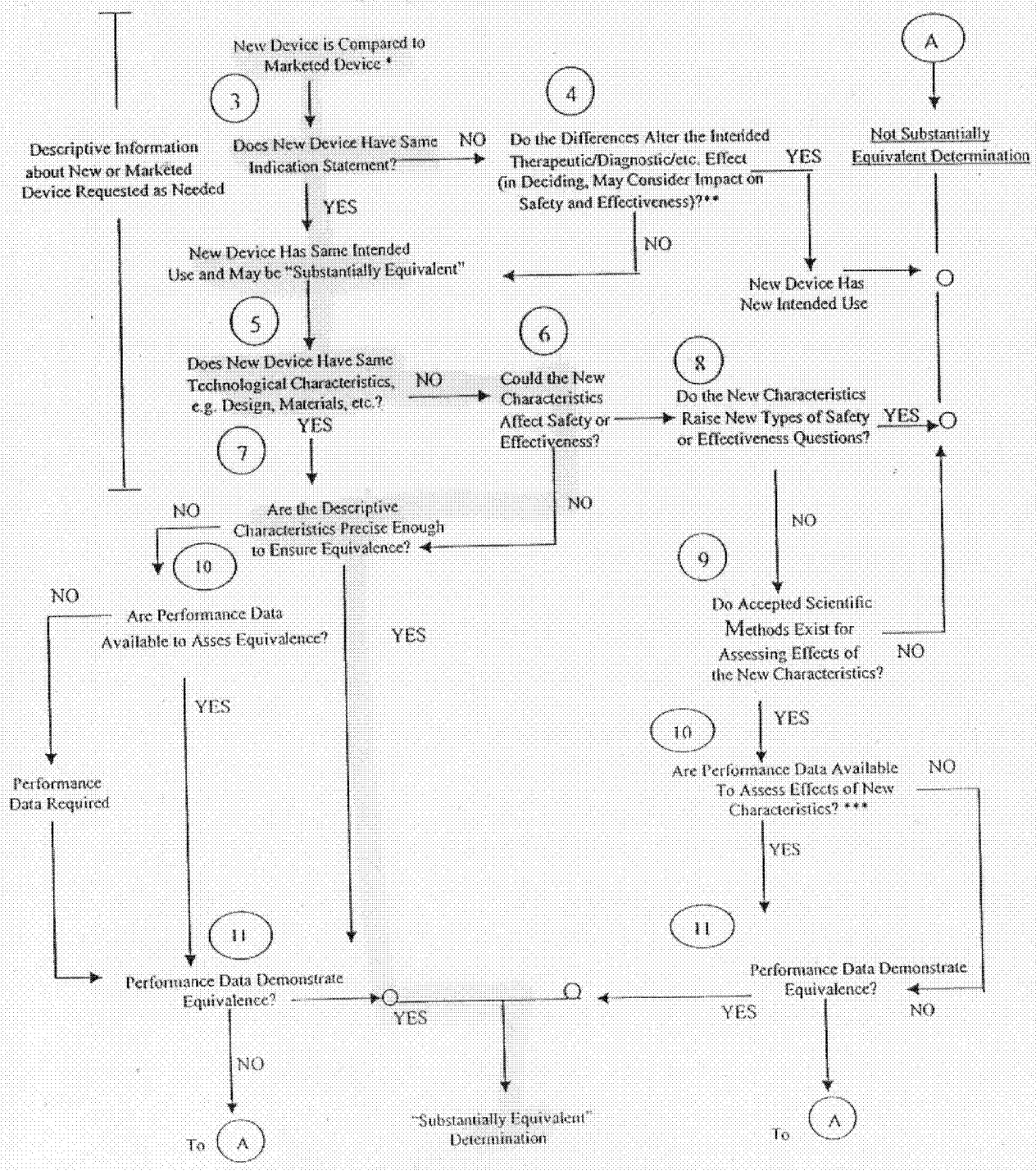

* 510(k) Submissions compare new devices to marketed devices. FDA requests additional information if the relationship between marketed and "predicate" (pre-Amendments or reclassified post-Amendments) devices is unclear.

** This decision is normally based on descriptive information alone, but limited testing information is sometimes required.

*** Data maybe in the 510(k), other 510(k)s, the Center's classification files, or the literature.

5